P.S.C. KY. NO. 2

CANCELING P.S.C. KY. NO. _____

SOUTH ANDERSON WATER DISTRICT

OF

LAWRENCEBURG, KENTUCKY

RATES & CHARGES

AND

RULES & REGULATIONS

FOR FURNISHING

WATER SERVICE

AT

ANDERSON COUNTY
KENTUCKY

FILED WITH THE

PUBLIC SERVICE COMMISSION

OF

KENTUCKY

DATE OF ISSUE _____
Month / Date / Year

DATE EFFECTIVE _____
Month / Date / Year

ISSUED BY Bob Kincer
(Signature of Officer)

TITLE _____

PUBLIC SERVICE COMMISSION
OF KENTUCKY
EFFECTIVE
5/28/2005
PURSUANT TO 807 KAR 5:011
SECTION 9 (1)

By _____
Executive Director

FOR Anderson County, Kentucky
Community, Town or City

P.S.C. KY. NO. _____

Original SHEET NO. 1

South Anderson Water District
(Name of Utility)

CANCELING P.S.C. KY. NO. _____

_____ SHEET NO. _____

RULES AND REGULATIONS

I. RATES AND CHARGES

A. Monthly Rates

B. Deposits

C. Meter Connection/Tap-on Charges

D. Special Non-recurring Charges

E. Purchased Water Rates

F. Leak Adjustment Rate

G. Wholesale Water Rates and Bulk Sales

H. Fire Sprinkler Rates

II. RULES AND REGULATIONS

A. Service Information

B. Special Rules or Requirements

C. Billings, Meter Readings, and Related Information

D. Deposits

E. Special Nonrecurring Charges

F. Customer Complaints to the Utility

G. Bill Adjustments

DATE OF ISSUE _____
Month / Date / Year

DATE EFFECTIVE _____
Month / Date / Year

ISSUED BY Bob Kincer
(Signature of Officer)

TITLE Chairman

BY AUTHORITY OF ORDER OF THE PUBLIC SERVICE COMMISSION
IN CASE NO. 2004-00525 DATED _____

PUBLIC SERVICE COMMISSION
OF KENTUCKY
EFFECTIVE
5/28/2005
PURSUANT TO 807 KAR 5:011
SECTION 9 (1)

By _____
Executive Director

FOR Anderson County, Kentucky
Community, Town or City

P.S.C. KY. NO. _____

Original SHEET NO. 2

South Anderson Water District
(Name of Utility)

CANCELING P.S.C. KY. NO. _____

_____ SHEET NO. _____

RULES AND REGULATIONS

H. Status of Customer Accounts during Billing Disputes

I. Customer Request for Termination of Service

J. Customer Relations

K. Refusal or Termination of Service

L. Meter Testing

M. Meter Test Records

N. Customer Requested Meter Tests

O. Access to Property

P. Location of Records

Q. Safety Program

R. System Inspections

S. Reporting of Accidents, Property Damage, or Loss of Service

T. Continuity of Service

U. Pressures

V. Service Lines and Connections

W. Leak Adjustments

X. Ownership of Mains, Services, and Appurtenances

Y. Notification of System Problems

DATE OF ISSUE _____
Month / Date / Year

DATE EFFECTIVE _____
Month / Date / Year

ISSUED BY Bob Kincer
(Signature of Officer)

TITLE Chairman

BY AUTHORITY OF ORDER OF THE PUBLIC SERVICE COMMISSION
IN CASE NO. 2004-00525 DATED _____

PUBLIC SERVICE COMMISSION
OF KENTUCKY
EFFECTIVE
5/28/2005
PURSUANT TO 807 KAR 5:011
SECTION 9 (1)

By _____
Executive Director

RULES AND REGULATIONS

Z. Legal Disclaimers

AA. Fire Departments

AB. Fire Hydrants

AC. Fire Sprinkler Systems

AD. Water Main Extensions

AE. Extension Policy for Developers and New Subdivisions and Developments

AF. Multi Rates to Multi Unit Premises

III. ATTACHMENTS

A. Water Shortage Plan

PUBLIC SERVICE COMMISSION
OF KENTUCKY
EFFECTIVE
5/28/2005
PURSUANT TO 807 KAR 5:011
SECTION 9 (1)

By _____
Executive Director

FOR Anderson County, Kentucky
Community, Town or City

P.S.C. KY. NO. 2

13th revised SHEET NO. 4

South Anderson Water District
(Name of Utility)

CANCELLING P.S.C. KY. NO. 2

12th revised SHEET NO. 4

RATES AND CHARGES

Monthly Water Rates

First 2,000 gallons	$19.61 Minimum Bill
Next 3,000 gallons	$9.63 per 1,000 gallons
Next 5,000 gallons	$7.38 per 1,000 gallons
All Over 10,000 gallons	$5.88 per 1,000 gallons

Bulk Loading Station	$3.91 per 1,000 gallons

Wholesale Rate: North Mercer Water District

First 3,000,000 gallons	$10,192.20 Minimum Bill (or $3.3974 per 1,000 gallons)
All over 3,000,000 gallons	$2.8941 per 1,000 gallons

DATE OF ISSUE December 15, 2016
Month / Date / Year

DATE EFFECTIVE January 1, 2017
Month / Date / Year

ISSUED BY Eddie Stevens
(Signature of Officer)

TITLE CHAIRMAN

BY AUTHORITY OF ORDER OF THE PUBLIC SERVICE COMMISSION OF KENTUCKY
IN CASE NO. ~~2013-00298~~ 2016-00441 DATED ~~August 8, 2013~~ JAN. 17, 2017

KENTUCKY
PUBLIC SERVICE COMMISSION
Talina R. Mathews
EXECUTIVE DIRECTOR
Talina R. Mathews

EFFECTIVE
1/1/2017
PURSUANT TO 807 KAR 5:011 SECTION 9 (1)

FOR Anderson County, Kentucky
Community, Town or City

P.S.C. KY. NO. _____

Original SHEET NO. 5

South Anderson Water District
(Name of Utility)

CANCELING P.S.C. KY. NO. _____

_____ SHEET NO. _____

RULES AND REGULATIONS

B. DEPOSITS:

Each customer will pay an equal deposit (currently $66) not to exceed 2/12 of the average annual bill.

DATE OF ISSUE _____
Month / Date / Year

DATE EFFECTIVE _____
Month / Date / Year

ISSUED BY _____
(Signature of Officer)

TITLE Chairman

BY AUTHORITY OF ORDER OF THE PUBLIC SERVICE COMMISSION
IN CASE NO. 2006-00164 DATED _____

PUBLIC SERVICE COMMISSION
OF KENTUCKY
EFFECTIVE
9/22/2006
PURSUANT TO 807 KAR 5:011
SECTION 9 (1)

By _____
Executive Director

For Anderson County, Kentucky
Community, Town or City

P.S.C. KY. NO._____

_____SHEET NO._____

South Anderson Water District
(Name of Utility)

CANCELLING P.S.C. KY.NO._____

Original SHEET NO. _____

RULES AND REGULATIONS

C. METER CONNECTION/TAP-ON CHARGES:

5/8 Inch x ¾ Inch	$1,000.00
All Larger Meters	Actual Cost

DATE OF ISSUE_____
Month /Date/Year

DATE EFFECTIVE_____
Month/Date/ Year

ISSUED BY Eddie R. Stevens
(Signature of Officer)

TITLE Chairman

BY AUTHORITY OF ORDER OF THE PUBLIC SERVICE COMMISSION

IN CASE NO._____ DATED_____

PUBLIC SERVICE COMMISSION
OF KENTUCKY
EFFECTIVE
8/1/2007
PURSUANT TO 807 KAR 5:011
SECTION 9 (1)

By_____
Executive Director

FOR Anderson County, Kentucky
Community, Town or City

P.S.C. KY. NO. _____

Original SHEET NO. 7

South Anderson Water District
(Name of Utility)

CANCELING P.S.C. KY. NO. _____

_____ SHEET NO. _____

RULES AND REGULATIONS

D. SPECIAL NON-RECURRING CHARGES:

Connection/Turn-on Charge	25.00
Connection/Turn-on Charge (After Hours)	50.00*
Field Collection Charge	25.00
Late Payment Penalty	10%
Meter Relocation Charge	Actual Cost
Damage to Meter Setting or Lid (Field visit plus equipment replaced)	Actual Cost
Meter Re-read Charge	25.00
Meter Re-read Charge (After hours)	50.00
Meter Test Charge	50.00
Re-connection Charge	50.00
Re-connection Charge (After Hours)	75.00*
Returned Check Charge	25.00
Service Call/Investigation	25.00
Service Call/Investigation (After Hours)	50.00*

***NOTE**—Regular working hours for the utility's Maintenance Staff is 8:00 a.m. to 12:00 p.m. and 1:00 p.m. to 4:00 p.m. excluding holidays. Upon customer request, and subject to availability of Maintenance Staff, services may be performed outside regular working hours at the after hours rate. Maintenance Staff who are called in after hours are guaranteed to be paid for a minimum of 2 hours.

DATE OF ISSUE _____
Month / Date / Year

DATE EFFECTIVE _____
Month / Date / Year

ISSUED BY Bob Kincer
(Signature of Officer)

TITLE Chairman

BY AUTHORITY OF ORDER OF THE PUBLIC SERVICE COMMISSION
IN CASE NO. 2004-00525 DATED _____

PUBLIC SERVICE COMMISSION
OF KENTUCKY
EFFECTIVE
5/28/2005
PURSUANT TO 807 KAR 5:011
SECTION 9 (1)

By _____
Executive Director

FOR Anderson County, Kentucky
Community, Town or City

P.S.C. KY. NO. _____

_____ SHEET NO. _____

South Anderson Water District
(Name of Utility)

CANCELLING P.S.C. KY. NO. _____

_____ SHEET NO. _____

RULES & REGS

Non-recurring Charges

Credit/Debit Card Policy

All customers may pay their bill by credit/debit card. The credit/debit card method of payment may be made in person at the South Anderson Water District office or by telephone.

If on the bill date an attempt to pay the credit card or debit card is made and the card is declined for any reason, payment is still due in full on that date and will be considered late after that date. All late charges and penalties will be applied. If a customer is paying on our disconnect day and the card is denied, the same rules as above apply, in addition to his/her service being disconnected..

When a customer makes a payment by credit card, the utility will assess a fee equal to that charged to the utility by the credit or debit card processing company to process the transaction. This fee is generally calculated using a formula applied to the balance of the amount charged to the credit or debit account but may be a flat fee per transaction. Prior to processing the transaction, the customer will be informed of the fee amount and, upon request by the customer, the formula employed to arrive at this fee amount.

1.76% of the bill plus .35 cents per transaction for Visa and Master Card

ACH – BANK DRAFT/AUTOMATIC WITHDRAW POLICY

All customers may pay their bill by ACH- Bank Draft/Automatic Withdraw. The ACH-bank draft/automatic withdraw will be scheduled for the 25th of each month.

On the 25th of each month the payment will be processed. If for any reason payment is declined the payment will still be due by 30th of the month. All late charges and penalties will apply if payment is not made by the 30th of the month.

When a customer makes a payment by ACH-Bank Draft/Automatic Withdraw, the utility will assess a fee per transaction equal to that charged to the utility by the bank. This fee is established by the banking agency. Customer will be informed of any changes in transaction cost.

.29 cents per transaction

DATE OF ISSUE _____
Month / Date / Year

DATE EFFECTIVE _____
Month / Date / Year

ISSUED BY Eddie Stevens
(Signature of Officer)

TITLE Chairman

BY AUTHORITY OF ORDER OF THE PUBLIC SERVICE COMMISSION
IN CASE NO. 2008-432 DATED 3-18-2009

PUBLIC SERVICE COMMISSION
OF KENTUCKY
EFFECTIVE
3/18/2009
PURSUANT TO 807 KAR 5:011
SECTION 9 (1)

By _____
Executive Director

RULES AND REGULATIONS

E. PURCHASED WATER RATES:

See Contract on file with City of Frankfort and City of Lawrenceburg.

F. LEAK ADJUSTMENTS:

Refer to Section 2 (W).

G. WHOLESALE WATER RATES:

The District does not sell water at a wholesale rate.

H. FIRE SPRINKLER SYSTEM RATES: See Section AC.

PUBLIC SERVICE COMMISSION
OF KENTUCKY
EFFECTIVE
5/28/2005
PURSUANT TO 807 KAR 5:011
SECTION 9 (1)

By _____
Executive Director

FOR Anderson County, Kentucky
Community, Town or City

P.S.C. KY. NO. _____

Original SHEET NO. 9

South Anderson Water District
(Name of Utility)

CANCELING P.S.C. KY. NO. _____

_____ SHEET NO. _____

RULES AND REGULATIONS

The following are the rules and regulations of the South Anderson Water District.. The schedule of rates prescribed herein will be uniformly charged to all customers of the utility. No one will receive or be entitled to free service by the utility. No employee or individual commissioner of the utility is permitted to make an exception to these rates, rules, or regulations. These rules and regulations are subject to change by the utility at any time, subject to the approval of the Public Service Commission. All customers will be responsible for paying a minimum bill whether any water is used or not as long as a meter is installed on the customer's premises.

A. Service Information.

1. Upon request the utility will give its customers or prospective customers such information as is reasonably possible in order that they may secure safe, efficient, and continuous service. The utility will inform its customers of any change made or proposed in the character of its service that might affect the efficiency, safety, or continuity of operation.
2. The utility will obtain the approval of the Public Service Commission prior to making any substantial change in the character of the service furnished that would affect the efficiency, adjustment, speed, or operation of the equipment or appliances of any customer. The application will show the nature of the change to be made, the number of customers affected, and the manner in which they will be affected.
3. The utility will inform each applicant for service of each type, class, and character of service available at his/her location.
4. Upon request the utility will provide the following information to any applicant/customer:
   a) Characteristics of Water. A written description of chemical constituents and bacteriological standards of the treated water as required by the Natural Resources Cabinet.

DATE OF ISSUE _____
Month / Date / Year

DATE EFFECTIVE _____
Month / Date / Year

ISSUED BY Bob Kinser
(Signature of Officer)

TITLE Chairman

BY AUTHORITY OF ORDER OF THE PUBLIC SERVICE COMMISSION
IN CASE NO. _____ DATED _____

PUBLIC SERVICE COMMISSION
OF KENTUCKY
EFFECTIVE
9/22/2006
PURSUANT TO 807 KAR 5:011
SECTION 9 (1)

By _____
Executive Director

RULES AND REGULATIONS

c) Reading Meters. Information about the method of reading meters.

d) Bill Analysis. A statement of the past readings of a customer's meter for a period of two (2) years.

B. Special Rules or Requirements.

1. The utility cannot establish any special rule or requirement without first obtaining the approval of the Public Service Commission.
2. A customer that has complied with Public Service Commission rules and regulations cannot be denied service for failure to comply with the utility's rules that have not been approved by the Public Service Commission.
3. Each prospective customer desiring water service will be required to sign the utility's Water Service Contract before service is supplied by the utility.
4. No customer is allowed to resell water except under the terms of a special contract executed by the utility and approved by the Public Service Commission.

C. Billings, Meter Readings, and Related Information.

1. Information on bills. Each bill issued by the utility will clearly show the following, if applicable: class of service; present and last preceding meter readings; date of the present reading; number of units consumed; meter constant, if any; net amount for service rendered; all taxes; any adjustments; and the gross amount of the bill. The date after which a late payment penalty applies to the gross amount will also be indicated. Estimated or calculated

RULES AND REGULATIONS

bills will be distinctly marked as such. The rate schedule under which the bill is computed will be furnished under one (1) of the following methods:

a) By printing it on the bill.

b) By publishing it in a newspaper of general circulation once each year.

c) By mailing it to each customer once each year.

d) By providing a place on each bill where a customer may request a copy of the applicable rates. The utility will mail the customer a copy by return first class mail.

2. Bill format. A copy of the utility's billing form will be included in the utility's tariff.

3. Meter readings. Registration of each meter shall read in the same units as used for billing unless a conversion factor is shown on the billing form.

4. Frequency of meter reading. Unless prevented by reasons beyond the utility's control, meter readings will be taken every month. Records will be kept by the utility to insure that this information is available to Public Service Commission staff and any customer requesting this information. If, due to reasons beyond its control, the utility is unable to read a meter in accordance with this subsection, the utility will record the date and time the attempt was made, if applicable, and the reason the utility was unable to read the meter.

5. Related Information.

   a) Bills and notices related to the utility's business will be mailed to the customer at the address listed on the Water Service Contract unless a change of address has been filed with the utility in writing. The utility will not otherwise be responsible for delivery of any bill or notice nor will the customer be excused from the payment of any bill or any performance required in the notice.

RULES AND REGULATIONS

b) Water service will be billed monthly.

c) Bills are payable and due on the date of issuance.

d) Payment must be received, or postmarked, by the due date, otherwise, the delinquent bill will be assessed the late payment penalty approved and on-file with the Public Service Commission. If the due date falls on Sunday or a holiday the customer will have until the next business day to pay before a penalty is assessed.

e) The late payment penalty will be assessed on the delinquent amount of the bill, less taxes and any prior penalty amounts. Pursuant to 807 KAR 5:006 Section 8 (3)(h), a penalty may be assessed only once on any bill for rendered services.

f) With the exception of existing connections, the existence of a special contract, or unusual circumstances requiring approval of the utility, a single meter can serve no more than one residential or commercial unit on and after the effective date of this tariff.

g) For existing connections, special contracts, or other utility approved situations, where two or more units are being served by one meter, the following rules will apply:

1) One bill per meter will be sent to the customer that signed the Water Service Contract.

2) The bill will consist of a charge in the amount of the utility's minimum bill multiplied by the number of units the meter serves. The amount of water included with a minimum bill will be multiplied by the number of units and deducted from the total amount of consumption. The remaining consumption will be evenly distributed among each unit, added to each unit's minimum bill, with the charges calculated in accordance with the currently approved rate schedule.

PUBLIC SERVICE COMMISSION
OF KENTUCKY
EFFECTIVE
5/28/2005
PURSUANT TO 807 KAR 5:011
SECTION 9 (1)

By _____
Executive Director

RULES AND REGULATIONS

3) The customer that signed the Water Service Contract will be fully and solely responsible for the charges associated with the connection including payment for all water passing through the meter, regardless of which unit is responsible for the water consumption.

D. Deposits.

1. Deposits to secure payment. The utility may require a minimum cash deposit or other guaranty to secure payment of bills.
2. Equal Deposits. An equal deposit amount for each class of customers will be established based on the average annual bill of customers in that class. Deposit amounts will not exceed two-twelfths (2/12) of the average annual bill of customers in each class where bills are rendered monthly. Deposit amounts are listed in the Rates and Charges section of this tariff.
3. Recalculation of deposits. If the utility retains the deposit for more than eighteen (18) months, it will notify customers in writing that, at the customer's request; the deposit will be recalculated every eighteen- (18) months based on actual usage of the customer. The notice of deposit recalculation will be included either on the customer's application for service or on the receipt of deposit, or may be included annually with or on customer bills. The notice of deposit recalculation will state that if the deposit on account differs by more than ten (10) dollars for residential customers, or by more than ten (10) percent for nonresidential customers, from the deposit calculated on actual usage, then the utility will refund any over-collection and may collect any underpayment. Refunds will be made either by check or by credit to the customer's bill, except that the utility will not refund any excess deposit if the customer's bill is delinquent at the time of recalculation.

PUBLIC SERVICE COMMISSION
OF KENTUCKY
EFFECTIVE
5/28/2005
PURSUANT TO 807 KAR 5:011
SECTION 9 (1)

By _____
Executive Director

RULES AND REGULATIONS

4. Waiver of Deposits. The deposit may be waived upon a customer's showing of satisfactory credit or payment history. In determining whether a deposit will be required or waived, the following criteria will be considered:

    a) Previous payment history with the utility. If the customer has no previous history with the utility, statements from other utilities, banks, etc. may be presented by the customer as evidence of good credit.

    b) Whether the customer has an established income or line of credit.

    c) Length of time the customer has resided or been located in the area.

    d) Whether the customer owns the property to be served.

    e) Whether another customer with a good payment history is willing to sign as a guarantor for an amount equal to the required deposit.

5. Additional deposit requirement. If a deposit has been waived or returned and the customer fails to maintain a satisfactory payment record, the utility may require that a deposit be made. The utility may require a deposit in addition to the initial deposit if the customer's classification of service changes or if there is a substantial change in usage.

6. Receipt of deposit. The utility will issue a receipt to every customer that pays a deposit. The receipt will show the name of the customer, location of the service or customer account number, date, and amount of deposit. If the notice of recalculation described in this section is not included in the utility's application for service or mailed with customer bills, the receipt of deposit will contain the notification. If deposit amounts change, the utility will issue a new receipt of deposit to the customer.

7. Deposits as a condition of service. Service may be refused or discontinued if payment of requested deposits is not made.

PUBLIC SERVICE COMMISSION
OF KENTUCKY
EFFECTIVE
5/28/2005
PURSUANT TO 807 KAR 5:011
SECTION 9 (1)

By _____
Executive Director

RULES AND REGULATIONS

8. Interest on deposits. Interest will accrue on all deposits at the rate prescribed by law beginning on the date of the deposit. Interest accrued will be refunded to the customer or credited to the customer's bill on an annual basis, except that the utility will not be required to refund or credit interest on deposits if the customer's bill is delinquent on the anniversary of the deposit date. Upon termination of service, the deposit, any principal amounts, and interest earned and owing will be credited to the final bill with any remainder refunded to the customer.

PUBLIC SERVICE COMMISSION
OF KENTUCKY
EFFECTIVE
5/28/2005
PURSUANT TO 807 KAR 5:011
SECTION 9 (1)

By _____
Executive Director

RULES AND REGULATIONS

E. Special Non-recurring Charges:

1. The utility will collect for special nonrecurring charges to recover customer-specific costs incurred which would otherwise result in monetary loss to the utility or increased rates to other customers to whom no benefits accrue from the service provided or action taken. The utility may establish or change any special nonrecurring charge by applying for Public Service Commission approval of such charge in accordance with the provisions of 807 KAR 5:011, Section 10.
2. Special nonrecurring charges will be applied uniformly throughout the area served by the utility. Such charges will relate directly to the service performed or action taken and only yield enough revenue to pay the expenses incurred in rendering the service.
3. The utility will assess a charge for the following non-recurring services:
   a) Connection/Turn-on Charge: Will be assessed for new service turn-on, seasonal turn-on, temporary service, or transfer of service. The charge will not be made for initial installation of service where a meter connection/tap-on charge is applicable.
   b) Field Collection Charge: Will be assessed when a utility representative visits the premises of the service connection to terminate service, and the customer is on-site and pays the bill to avoid termination of service. This fee may only be charged once per billing period.
   c) Late Payment Penalty: Will be assessed on the delinquent amount of the bill, less taxes.
   d) Meter Relocation Charge: Will be assessed when a customer or other authorized person requests that a meter be relocated, changed, or modified. Those requesting a change must reimburse the utility for the actual costs

PUBLIC SERVICE COMMISSION
OF KENTUCKY
EFFECTIVE
5/28/2005
PURSUANT TO 807 KAR 5:011
SECTION 9 (1)

By _____
Executive Director

RULES AND REGULATIONS

incurred, including but not limited to appropriate legal, administrative, engineering, overhead, or other related costs.

e) Meter Re-read Charge: Will be assessed when a customer requests the utility to re-read the customer's meter and the re-read proves that the original meter reading was correct.

f) Meter Test Charge: Will be assessed when a customer requests the utility perform a test on the customer's meter to check for accuracy, and the test shows the customer's meter is not more than two percent (2%) fast.

g) Reconnection Charge: Will be assessed to reconnect service that has been terminated for non-payment of service or for violation of Utility or Public Service Commission rules and regulations, and will include the cost of the service trip for both the disconnection and the reconnection.

h) Returned Check Charge: Will be assessed when a customer's check is returned, either due to insufficient funds or other reason due to customer fault.

i) Service Call/Investigation Charge: Will be assessed when a customer requests the onsite presence of utility personnel to investigate a service problem and the problem is a result of the customer's own plumbing facilities, beyond the utility's delivery point, or not caused by failure of utility facilities. Any maintenance and repair of facilities beyond the utility's delivery point is the responsibility of the customer.

PUBLIC SERVICE COMMISSION
OF KENTUCKY
EFFECTIVE
5/28/2005
PURSUANT TO 807 KAR 5:011
SECTION 9 (1)

By _____
Executive Director

RULES AND REGULATIONS

F. Customer Complaints to the Utility. Upon complaint to the utility by a customer at the utility's office, by telephone, or in writing, the utility will make a prompt and complete investigation and advise the complainant of its findings. The utility's operator/manager will make a decision within ten (10) days, which the complainant will then have ten (10) days to appeal to the utility's board of commissioners. The customer will receive a final decision from the utility no later than thirty (30) days following the date that the complaint was made. If the complainant is not satisfied with the utility's decision, the utility will provide written notice to the complainant of his/her right to appeal the utility's decision by filing a complaint with the Public Service Commission. The utility will also provide the customer with the address and telephone number of the Public Service Commission. The utility will keep a record of all written complaints. This record will show the name and address of the complainant, the date and nature of the complaint, and the adjustment or disposition of the complaint. Records will be maintained for two (2) years from the date of resolution of the complaint.

G. Bill Adjustments:

1. Fast or slow reading meters:

a) If upon periodic test, requested test, or complaint test, a meter in service is found to be more than two (2) percent fast, additional tests will be made to determine the average error of the meter. The tests will be made in accordance with Public Service Commission rules and regulations applicable to the type of meter involved.

b) If test results on a customer's meter show an average error greater than two (2) percent fast or slow, or if a customer has been incorrectly billed for any other

PUBLIC SERVICE COMMISSION
OF KENTUCKY
EFFECTIVE
5/28/2005
PURSUANT TO 807 KAR 5:011
SECTION 9 (1)

By _____
Executive Director

RULES AND REGULATIONS

reason, except in an instance where a utility has filed a verified complaint with the appropriate law enforcement agency alleging fraud or theft by a customer, the utility will immediately determine the period during which the error has existed, and will recompute and adjust the customer's bill to either provide a refund to the customer or collect an additional amount of revenue from the underbilled customer. Any adjustment to the customer's account will be in accordance with the rules and regulations of the Public Service Commission pursuant to 807 KAR 5:066 Section 9(c).

c) The utility will readjust the account based upon the period during which the error is known to have existed. If the period during which the error existed cannot be determined with reasonable precision, the time period will be estimated using such data as elapsed time since the last meter test, if applicable, and historical usage data for the customer. If that data is not available, the average usage of similar customer loads will be used for comparison purposes in calculating the time period. If the customer and the utility are unable to agree on an estimate of the time period during which the error existed, the Public Service Commission will determine the issue. In all instances of customer overbilling, the customer's account will be credited or the overbilled amount refunded at the discretion of the customer within thirty (30) days after final meter test results. A utility will not require customer repayment of any underbilling to be made over a period shorter than a period coextensive with the underbilling.

2. Meter read failure. When a meter has ceased to register, or a meter reading cannot be obtained, the quantity of water to be billed will be based upon an average of twelve-months' consumption. If said meter readings are not available for an entire twelve-month period, the

PUBLIC SERVICE COMMISSION
OF KENTUCKY
EFFECTIVE
5/28/2005
PURSUANT TO 807 KAR 5:011
SECTION 9 (1)

By _____
Executive Director

RULES AND REGULATIONS

water bill will be estimated by the utility, subject to an upward or downward adjustment once a twelve-month average of actual meter readings can be calculated.

3. Monitoring usage. The utility will monitor a customer's usage at least annually in such a way to draw the utility's attention to unusual deviations in a customer's usage. If a customer's usage is unduly high (100% above average) and the deviation is not otherwise explained, the utility will test the customer's meter to determine whether the meter shows an average error greater than two (2) percent fast or slow.

4. Usage investigation. If the utility's procedure for monitoring usage indicates that an investigation of a customer's usage is necessary, the utility will notify the customer in writing either during or immediately after the investigation of the reasons for the investigation, and of the findings of the investigation. If knowledge of a serious situation requires more expeditious notice, the utility will notify the customer by the most expedient means available.

5. Customer notification. If a meter is tested and it is found necessary to make a refund or back bill a customer, the customer will be notified in substantially the following form:

> On _____, 20___, the meter bearing identification No. ____ installed in your building located at _____ (Street and Number) in _____ (city) was tested at _____ (on premises or elsewhere) and found to register _____ (percent fast or slow). The meter was tested on _____ (Periodic, Request, Complaint) test.
>
> Based upon this we herewith _____ (charge or credit) with the sum of $____, which amount has been noted on your regular bill. If you desire a cash refund, rather than a credit to your account, of any amount overbilled, you must notify this office in writing within seven (7) days of the date of this notice.

PUBLIC SERVICE COMMISSION
OF KENTUCKY
EFFECTIVE
5/28/2005
PURSUANT TO 807 KAR 5:011
SECTION 9 (1)

By _____
Executive Director

RULES AND REGULATIONS

H. Status of Customer Accounts during Billing Disputes. With respect to any billing dispute, customer accounts shall be considered to be current while the dispute is pending as long as the customer continues to make undisputed payments and stays current on subsequent bills.

I. Customer's Request for Termination of Service.

1. Any customer desiring service terminated or changed from one address to another shall give the utility three (3) working days' notice in person, in writing, or by telephone, provided such notice does not violate contractual obligations. The customer will not be responsible for charges for service beyond the three- (3) day notice period if the customer provides proper notification and reasonable access to the meter during the notice period. If the customer notifies the utility of his/her request for termination by telephone, the burden of proof is on the customer to prove that service termination was requested if a dispute arises.
2. Upon request that service be reconnected at any premises subsequent to the initial installation or connection to its service lines, the utility will charge the applicant a reconnect fee as set out in this tariff and approved by the Public Service Commission.

J. Customer Relations.

1. Display of customer rights. The utility will prominently display in the office in which payment is received a copy of Customer's Rights. If a customer indicates to any utility personnel that he is experiencing difficulty in paying a current utility bill, that employee will refer the customer to the designated representative for explanation of the customer's rights.
2. Partial payment plans. The utility shall negotiate and accept reasonable partial payment plans at the request of residential customers who have received a termination notice for failure to

PUBLIC SERVICE COMMISSION
OF KENTUCKY
EFFECTIVE
5/28/2005
PURSUANT TO 807 KAR 5:011
SECTION 9 (1)

By _____
Executive Director

RULES AND REGULATIONS

pay, except that a utility is not required to negotiate a partial payment plan with a customer who is delinquent under a previous partial payment plan. Partial payment plans must be mutually agreed upon. Plans which extend for a period longer than thirty (30) days will be in writing and will advise customers that service may be terminated without additional notice if the customer fails to meet the obligations of the plan.

3. Utility inspections of service conditions prior to providing service. The utility will inspect the condition of the meter and service connections before providing service to a new customer so that prior or fraudulent use of the facilities will not be attributed to the new customer. The new customer will be afforded the opportunity to be present at such inspections. The utility will not be required to render service to any customer until any defects in the customer-owned portion of the service facilities have been corrected.

4. Prompt connection of service. The utility will reconnect existing service within twenty-four (24) hours, and will install and connect new service within seventy-two (72) hours, when the cause for refusal or discontinuance of service has been corrected and the rules and regulations of the utility and Public Service Commission have been met.

5. Advance termination notice. When advance termination notice is required, the termination notice will be mailed or otherwise delivered to the last known address of the customer. The termination notice will be in writing, distinguishable and separate from any bill. The termination notice will plainly state the reason for termination, that the termination date will not be affected by receipt of any subsequent bill, and that the customer has the right to dispute the reasons for termination.

PUBLIC SERVICE COMMISSION
OF KENTUCKY
EFFECTIVE
5/28/2005
PURSUANT TO 807 KAR 5:011
SECTION 9 (1)

By _____
Executive Director

RULES AND REGULATIONS

K. Refusal or Termination of Service.

1. The utility may refuse service to a customer under the following conditions:

   a) For noncompliance with utility or Public Service Commission rules and regulations. The utility cannot refuse service to any customer for noncompliance without first having made a reasonable effort to obtain customer compliance. After such effort by the utility, service may be refused only after the customer has been given a written notice of refusal stating the reasons for refusal of service.

   b) For dangerous conditions. If a dangerous condition exists which could subject any person to imminent harm or result in substantial damage to the property of the utility or others is found to exist on the customer's premises, then service will be refused. The utility will notify the customer in writing and, if possible, orally for the reasons for refusal of service. Such notice will be recorded by the utility and will include the corrective action to be taken by the customer before service can be provided.

   c) For refusal of access. When a customer refuses or neglects to provide reasonable access to the premises for installation, operation, meter reading, maintenance or removal of utility property, the utility may refuse service. The utility will notify the customer in writing and, if possible, orally for the reasons for refusal of service. Such notice will be recorded by the utility and will include the corrective action to be taken by the customer before service can be provided.

   d) For outstanding indebtedness. The utility will not furnish new service to any customer who is indebted to the utility until that customer has repaid the indebtedness.

   e) For noncompliance with state, local, or other codes. The utility may refuse service to a customer if the customer does not comply with state, municipal or other codes, rules, and/or administrative regulations applying to such service. The utility will

PUBLIC SERVICE COMMISSION
OF KENTUCKY
EFFECTIVE
5/28/2005
PURSUANT TO 807 KAR 5:011
SECTION 9 (1)

By _____
Executive Director

RULES AND REGULATIONS

notify the customer in writing and, if possible, orally for the reasons for refusal of service. Such notice will be recorded by the utility and will include the corrective action to be taken by the customer before service can be provided.

2. Utility Initiated Termination of Service.

a) The termination notice requirements stated herein will not apply if termination notice requirements to a particular customer or customers are otherwise dictated by the terms of a special contract between the utility and customer which has been approved by the Public Service Commission.

b) When advance termination notice is required, the termination notice shall be mailed or otherwise delivered to the last known address of the customer. The termination notice shall be in writing, distinguishable and separate from any bill. The termination notice shall plainly state the reason for termination, that the termination date will not be affected by receipt of any subsequent bill, and that the customer has the right to dispute the reasons for termination.

c) The utility may terminate service to a customer under the following conditions with an advance termination notice:

1) For noncompliance with utility or Public Service Commission rules and regulations. The utility cannot terminate service to any customer for noncompliance without first having made a reasonable effort to obtain customer compliance. After such effort by the utility, service may be terminated only after the customer has been given at least ten (10) days written termination notice.

PUBLIC SERVICE COMMISSION
OF KENTUCKY
EFFECTIVE
5/28/2005
PURSUANT TO 807 KAR 5:011
SECTION 9 (1)

By _____
Executive Director

RULES AND REGULATIONS

2) For refusal of access. When a customer refuses or neglects to provide reasonable access to the premises for installation, operation, meter reading, maintenance, or removal of utility property, the utility may terminate service. Such action will be taken only when corrective action negotiated between the utility and customer has failed to resolve the situation and after the customer has been given at least ten (10) days' written notice of termination.

3) For noncompliance with state, local, or other codes. The utility may terminate service to a customer that does not comply with state, municipal, and/or other codes, rules, and regulations that apply to such service. A utility may terminate service only after ten (10) days' written notice of termination is provided unless ordered to terminate immediately by a governmental official.

4) For nonpayment of bills. The utility may terminate service for nonpayment of charges incurred for utility services. The utility may terminate service only after five (5) days' written notice of termination is provided, and after twenty (20) days have elapsed since the mailing date of the original unpaid bill.

d) The utility may terminate service to a customer if the following conditions exist without an advance termination notice. Within twenty-four (24) hours after such termination, the utility shall send written notification to the customer of the reason(s) for termination upon which the utility relies, and of the customer's right to challenge the termination by filing a formal complaint with the Public Service Commission. The utility will not restore service until the customer agrees to comply with all rules and regulations of the utility and Public Service Commission.

1) For illegal use or theft of service. The utility may terminate service to a customer without advance notice if it has evidence that a customer has obtained unauthorized service by illegal use or theft. This right of termination

PUBLIC SERVICE COMMISSION
OF KENTUCKY
EFFECTIVE
5/28/2005
PURSUANT TO 807 KAR 5:011
SECTION 9 (1)

By _____
Executive Director

RULES AND REGULATIONS

is separate from and in addition to any other legal remedies that the utility may pursue for illegal use or theft of service.

2) For dangerous conditions. If a dangerous condition relating to the utility's service which could subject any person to imminent harm or result in substantial damage to the property of the utility or others is found to exist on the customer's premises, then service will be terminated immediately. Upon termination the utility will leave notification at the customer's dwelling and, if possible, orally contact the customer to inform him/her of the reasons for the termination. Such notice will be recorded by the utility and will include the corrective action to be taken by the customer or utility before service can be restored.

3) Unapproved Extensions and/or Additions. Any extension or additions to an existing service connection that have not been approved by the utility will be considered theft of service, and will constitute grounds for termination of service. This right of termination is separate from and in addition to any other legal remedies that the utility may pursue for illegal use or theft of service.

4) Misrepresentation. Any misrepresentation in the application or contract as to the property or fixtures to be supplied or additional use to be made of water will constitute grounds for termination of service, and the customer shall be liable for any damage to any of the utility's facilities or equipment.

5) Failure to Report Changes. Failure to notify the utility of additions to the property or fixtures to be supplied or additional use to be made of water will constitute grounds for termination of service.

PUBLIC SERVICE COMMISSION
OF KENTUCKY
EFFECTIVE
5/28/2005
PURSUANT TO 807 KAR 5:011
SECTION 9 (1)

By _____
Executive Director

RULES AND REGULATIONS

6) Resale of Water. Under no circumstances will a customer be allowed to resell or give away water except under the terms of a special contract executed by the utility and approved by the Public Service Commission. Failure to comply with this rule will constitute grounds for termination of service.

7) Waste or Misuse. Waste or misuse of water due to improper or imperfect service pipes and/or failure to keep said pipes in suitable state of repair will constitute grounds for termination of service.

8) Tampering with meter, meter seal, service, valves, or other system facilities, or permitting such tampering by others will constitute grounds for termination of service.

9) Connections, cross-connections, or permitting the same, of any separate water supply to premises that receive water from the utility will constitute grounds for termination of service.

e) The utility will not terminate service to a customer if the following conditions exist:

1) If payment for services is made. Service will not be terminated to a customer that was sent a termination notice if the customer delivers full payment to the utility prior to the actual termination of service.

2) If a partial payment agreement is in effect. Service will not be terminated for nonpayment if the customer and the utility have entered into a partial payment plan and the customer is meeting the requirements of the plan.

PUBLIC SERVICE COMMISSION
OF KENTUCKY
EFFECTIVE
5/28/2005
PURSUANT TO 807 KAR 5:011
SECTION 9 (1)

By _____
Executive Director

RULES AND REGULATIONS

3) If a medical certificate is presented. Service will not be terminated for thirty (30) days beyond the termination date if a physician, registered nurse or public health officer certifies in writing that termination of service will aggravate a debilitating illness or infirmity on the affected premises. The utility may refuse to grant consecutive extensions for medical certificates past the original thirty (30) days unless the certificate is accompanied by an agreed partial payment plan. The utility will not require a new deposit from a customer to avoid termination of service for a thirty (30) day period who presents to the utility a medical certificate certified in writing by a physician, registered nurse or public health officer.

RULES AND REGULATIONS

L. Meter Testing.

1. Water meters will be tested before being installed for use by any customer. The water meter will be in good working order and adjusted as close to the optimum operating tolerance as possible, in accordance with 807 KAR 5:022, Section 8(3)(a), 807 KAR 5:041, Section 17(1)(a)-(c) and 807 KAR 5:066, Section 15(2)(a)-(b).
2. The utility may have all or part of its meter testing performed by another utility or agency approved by the Public Service Commission. The utility will notify the Public Service Commission of the make, type, and serial number of standards used for testing.
3. The utility cannot place in service any basic measurement standard unless the Public Service Commission has approved the calibration. The Public Service Commission will be notified promptly of the adoption or deletion of any basic standards requiring approval of the calibration.
4. Meter testers must be certified by the Public Service Commission. Certified meter testers will perform tests as necessary to determine the accuracy of the utility's meters and to adjust the utility's meters to the degree of accuracy required by the rules and regulations of the Public Service Commission.

M. Meter Test Records.

1. A complete record of all meter tests and adjustments and data sufficient to allow checking of test calculations will be recorded by the meter tester. Such record will include: information to identify the unit and its location; date of tests; reason for such tests; readings before and after test; statement of "as found" and "as left" accuracies sufficiently complete to permit checking of calculations employed; notations showing that all required checks have been made; statement of repairs made, if any; identifying number of the meter; type and capacity of the

PUBLIC SERVICE COMMISSION
OF KENTUCKY
EFFECTIVE
5/28/2005
PURSUANT TO 807 KAR 5:011
SECTION 9 (1)

By _____
Executive Director

meter; and the meter constant. The complete record of tests of each meter will be continuous for at least two (2) periodic test periods and will in no case be less than two (2) years.

2. The utility will keep numerically arranged and properly classified records for each meter owned, used and inventoried by the utility. The identification number, date of purchase, name of manufacturer, serial number, type, rating, and name and address of each customer on whose premises the meter has been in service with date of installation and removal will be included in the records. These records will also contain condensed information concerning all tests and adjustments including dates and general results of such adjustments. The records will reflect the date of the last test and indicate the proper date for the next periodic test required by the applicable Public Service Commission rule and/or regulation.

3. Upon completion of adjustment and test of any meter pursuant to Public Service Commission rules and regulations, the utility will affix to the meter a suitable seal in such a manner that adjustments or registration of the meter cannot be altered without breaking the seal.

N. Customer Requested Meter Tests.

1. The utility will make a test of any meter upon written request of any customer if the request is not made more frequently than once every twelve- (12) months. The customer shall be given the opportunity to be present at the requested test. If the test shows that the meter was not more than two (2) percent fast, the utility will make a reasonable charge for the test, the amount being approved by the Public Service Commission and set out in the utility's tariff.

2. After having first obtained a test from the utility, any customer of the utility may request a meter test by the Public Service Commission upon written application. Such request shall not be made more frequently on one (1) meter than once every twelve- (12) months.

PUBLIC SERVICE COMMISSION
OF KENTUCKY
EFFECTIVE
5/28/2005
PURSUANT TO 807 KAR 5:011
SECTION 9 (1)

By _____
Executive Director

RULES AND REGULATIONS

O. Access to Property.

1. The utility shall at all reasonable hours have access to meters, service connections, and other property owned by it and located on customer's premises for purposes of installation, maintenance, meter reading, operation, replacement or removal of its property at the time service is terminated. Any employee of the utility whose duties require him/her to enter the customer's premises will wear a distinguishing uniform or other insignia identifying him/her as an employee of the utility, or show a badge or other identification which will identify him/her as an employee.
2. Obtaining easements and right-of-ways necessary to extend service will be the responsibility of the utility.
3. All customers must grant, convey, or cause to be granted or conveyed to the utility a perpetual easement and right-of-way across any property owned or controlled by the customer wherever necessary for the utility's facilities in order to provide service.
4. The utility cannot require a prospective customer to obtain easements or rights-of-way on property not owned by the prospective customer as a condition for providing service. However, the cost of obtaining easements or rights-of-way will be included in the total per foot cost of an extension, and will be apportioned among the utility and customer in accordance with the applicable extension administrative regulation.

P. Location of Records. All records required by Public Service Commission rules and regulations will be kept in the office of the utility and will be made available to representatives, agents or staff of the Public Service Commission upon reasonable notice at all reasonable hours.

PUBLIC SERVICE COMMISSION
OF KENTUCKY
EFFECTIVE
5/28/2005
PURSUANT TO 807 KAR 5:011
SECTION 9 (1)

By _____
Executive Director

RULES AND REGULATIONS

Q. Safety Program. The utility will adopt and execute a safety program, appropriate to the size and type of its operations. At a minimum, the safety program will:

1. Establish a safety manual with written guidelines for safe working practices and procedures to be followed by utility employees.
2. Instruct employees in safe methods of performing their work.
3. Instruct employees whom, in the course of their work, are subject to the hazard of electrical shock, asphyxiation or drowning, in accepted methods of artificial respiration.

R. System Inspections.

1. The utility will adopt inspection procedures to assure safe and adequate operation of its facilities and compliance with Public Service Commission rules and regulations. These procedures will be filed with the Public Service Commission for review.
2. Upon receipt of a report of a potentially hazardous condition at any utility facility made by a qualified employee, public official, or customer, the utility will inspect all portions of the system which are the subjects of the report.
3. Appropriate records will be kept by the utility to identify the inspection made, deficiencies found and action taken to correct the deficiencies.
4. Inspections. The utility will make systematic inspections of its system in the manner set out below to insure that the Public Service Commission's safety requirements are being met. These inspections will be made as often as necessary but not less frequently than is set forth below for various classes of facilities and types of inspection.

RULES AND REGULATIONS

a) The utility will annually inspect all structures pertaining to source of supply for their safety and physical and structural integrity, including dams, intakes, and traveling screens. The utility will semiannually inspect supply wells, their motors and structures, including electric power wiring and controls for proper and safe operation.

b) The utility will annually inspect all structures pertaining to purification for their safety, physical and structural integrity and for leaks, including sedimentation basins, filters, and clear wells; chemical feed equipment; pumping equipment and water storage facilities, including electric power wiring and controls; hydrants, mains, and valves.

c) The utility will monthly inspect construction equipment and vehicles for defects, wear, operational hazards, lubrication, and safety features.

S. Reporting of Accidents, Property Damage, or Loss of Service.

1. Within two (2) hours following discovery the utility will notify the Public Service Commission by telephone or electronic mail of any utility related accident which results in:

   a) Death; or shock or burn requiring medical treatment at a hospital or similar medical facility, or any accident requiring inpatient overnight hospitalization;

   b) Actual or potential property damage of $25,000 or more; or

   c) Loss of service for four (4) or more hours to ten (10) percent or 500 or more of the utility's customers, whichever is less.

2. A summary written report will be submitted by the utility to the Public Service Commission within seven (7) calendar days of the utility related accident.

RULES AND REGULATIONS

T. Continuity of Service.

1. Emergency interruptions. The utility will make all reasonable efforts to prevent interruptions of service and when such interruptions occur will endeavor to reestablish service with the shortest possible delay consistent with the safety of its consumers and the general public. If an emergency interruption of service affects service to any public fire protection device, the utility will immediately notify the fire chief or other public official responsible for fire protection.
2. Scheduled interruptions. If the utility finds it necessary to schedule an interruption of its service, it will notify all customers to be affected by the interruption, stating the time and anticipated duration of the interruption. Whenever possible, scheduled interruptions will be made at hours of least inconvenience to customers. If public fire protection is provided by mains affected by the interruptions, the utility will notify the fire chief or other officials responsible for fire protection of the interruption, stating the time and anticipated duration. The fire chief or other official responsible for fire protection will be notified immediately upon restoration of service.
3. Record of interruptions. The utility will keep a complete record of all interruptions on its entire system. This record will show the cause of interruption, date, time, duration, remedy and steps taken to prevent recurrence.

U. Pressures.

1. Standard pressure. The utility will maintain a standard pressure in its distribution system at locations to be designated as the point or points of "standard pressure." The selection of such points will be confined to locations fairly representative of average conditions. In selecting points for fixed standard pressure, the utility may divide its distribution system into districts

PUBLIC SERVICE COMMISSION
OF KENTUCKY
EFFECTIVE
5/28/2005
PURSUANT TO 807 KAR 5:011
SECTION 9 (1)

By _____
Executive Director

if division is necessary due to differences of elevation or loss of pressure because of friction, or both, and may either adopt a standard pressure for each division or establish a single standard pressure for its distribution system as a whole. In no case will the constant difference between the highest and lowest pressures in a district for which a standard has been adopted exceed fifty (50) percent of such standard. The utility may, in extenuating circumstances, furnish service that does not comply with the foregoing specifications if the customer is fully advised of the conditions under which average service may be expected. The Public Service Commission, upon investigation, may require improvements when it appears right and proper that such upgrades should be made. In no event, however, will the pressure at the customer's service pipe under normal conditions fall below thirty- (30) psig nor will the static pressure exceed 150 psig.

2. Pressure surveys. At least once a year the utility will make a survey of pressures in its distribution system of sufficient magnitude to indicate the quality of service being rendered at representative points in its system. Pressure charts for these surveys will show the date and time of beginning and end of the test and the location at which the test was made. Records of these pressure surveys will be maintained at the utility's office and will be made available to the Public Service Commission upon request.

V. Service Lines & Connections.

1. The utility will furnish and install at its own expense for the purpose of connecting its distribution system to the customer's premises that portion of the service connection from its main to and including the meter and meter box. The utility will recoup this expense from the customer in accordance with KRS 278.0152.

PUBLIC SERVICE COMMISSION
OF KENTUCKY
EFFECTIVE
5/28/2005
PURSUANT TO 807 KAR 5:011
SECTION 9 (1)

By _____
Executive Director

FOR Anderson County, Kentucky
Community, Town or City

P.S.C. KY. NO. _____

Original SHEET NO. 36

South Anderson Water District
(Name of Utility)

CANCELING P.S.C. KY. NO. _____

_____ SHEET NO. _____

RULES AND REGULATIONS

2. In areas where the distribution system follows well-defined streets and roads, the customer's point of service will be located at that point on or near the street right-of-way or property line most accessible to the utility from its distribution system. In areas where the distribution system does not follow streets and roads, the point of service will be located as near the customer's property line as practicable. Prior to installation of the meter the utility will consult with the customer as to the most practical location. If possible meters will be installed within 5 feet of the existing water main or the applicant's property at a point which his closest to the existing water main.
3. Depth of service line. All service lines must be laid at a sufficient depth (a minimum of 24 inches) to prevent freezing during the coldest weather normally experienced except where services are not intended for use during freezing weather and are actually drained during such periods.
4. A plumbing permit from the appropriate regulatory agency is required before the utility can establish service.
5. The applicant/customer must furnish and lay the necessary pipe to make the connection from the point of service to the point of usage and be financially responsible for all costs associated with the installation and maintenance of his/her service line plumbing, including a shut-off valve and one-way check valve, installed on his/her property beginning at the outlet side of the water meter. The service line must be kept in good repair and in accordance with utility and Public Service Commission rules and regulations.
6. The installation and maintenance of the water service line must be in accordance with the rules and regulations of the Kentucky Department of Health.
7. A cross-connection of the utility's system with any other source is strictly prohibited.

DATE OF ISSUE _____
Month / Date / Year

DATE EFFECTIVE _____
Month / Date / Year

ISSUED BY Bob Kincer
(Signature of Officer)

TITLE Chairman

BY AUTHORITY OF ORDER OF THE PUBLIC SERVICE COMMISSION
IN CASE NO. 2004-00525 DATED _____

PUBLIC SERVICE COMMISSION
OF KENTUCKY
EFFECTIVE
5/28/2005
PURSUANT TO 807 KAR 5:011
SECTION 9 (1)

By _____
Executive Director

RULES AND REGULATIONS

8. A well that has or is being used on the premises must be inspected by utility personnel to verify disconnection and separation.
9. Absolutely no galvanized pipe or fittings can be used in the installation.
10. The utility will not set a meter on a customer's service line at a point that does not deliver 30 psig at the meter.
11. If the applicant/customer's point of usage is at a higher elevation than the meter, the customer should consult with a reputable engineering firm to properly size the service line from the meter to the point of usage.
12. Should an applicant/customer desire a higher pressure due to location or other need, provisions must be made by the applicant for an individual pressure booster system. The manner of connection, location cross-connection protection and type is subject to approval by the utility. The utility reserves the right to require discontinuance and disconnection should the private booster system have a detrimental effect on the utility's system.
13. Piping on the premises of the applicant/customer must be installed so that connections are conveniently located with respect to the utility's lines and mains. A place must be provided for metering that is unobstructed and accessible at all times.
14. The utility may require the applicant/customer, at his/her own expense, to install a back-flow preventor and/or pressure regulator. The utility will notify customer of any need for an expansion tank.
15. All meters will be installed, renewed, and maintained at the expense of the utility, and the utility reserves the right to approve the size and type of meter used.
16. All taps and connections to the mains of the utility must be made by and/or under the direction and supervision of utility personnel and will incur a meter connection/tap-on

PUBLIC SERVICE COMMISSION
OF KENTUCKY
EFFECTIVE
5/28/2005
PURSUANT TO 807 KAR 5:011
SECTION 9 (1)

By _____
Executive Director

RULES AND REGULATIONS

charge, an amount that has been approved by the Public Service Commission for such service. Payment of this fee is for the privilege of connecting to the water system and the payment of the fee does not constitute the purchase of a water meter.

17. Should an applicant requesting a 5/8" x 3/4" meter require service on the opposite side of the road from the water main, the utility will provide the service at no additional cost to the customer other than the standard meter connection/tap-on charge. All larger size meters will be charged the actual cost of installing the meter, including, when applicable, the additional costs for crossing the road.

18. Any customer having boilers and/or pressure vessels that receive water from the utility must have a check valve on the water supply line and a vacuum valve on the steam line in order to prevent a collapse were the water supply from the utility be interrupted or discontinued.

19. Any customer desiring nonstandard service shall pay the cost of any special installation necessary to meet his particular requirements for service other than standard water taps. This includes fire hydrants, check valves, pressure reducing valves when customer requests pressure under 100 psi, and surge relief valves.

W. Leak Adjustments. Customers shall be allowed a leak adjustment once every 12 months providing the customer provides documentation that the leak has been repaired. In adjusting bills for leaks, the Utility will determine the average usage for the customer based on historical usage, and the customer will pay a bill based on his/her average usage. All water used, or lost, in excess of the average usage will be billed at the District's actual cost of water.

FOR Anderson County, Kentucky
Community, Town or City

P.S.C. KY. NO. _____

Original SHEET NO. 39

South Anderson Water District
(Name of Utility)

CANCELING P.S.C. KY. NO. _____

_____ SHEET NO. _____

RULES AND REGULATIONS

X Ownership of Mains, Services, and Appurtenances:

1. All mains, valves, crossings, and other appurtenances are and shall remain the property of the utility, whether installed by the utility or the customer.
2. All service lines from the main to the meter with appurtenances are and shall remain the property of the utility, whether installed by the utility or the customer.
3. The customer shall install, own, and maintain his/her service line from the meter (or point of delivery) to the point of usage.

Y. Notification of System Problems. The customer shall notify the utility immediately should the service be unsatisfactory for any reason, or should there be any defects, problems, trouble, or accidents affecting the water system.

DATE OF ISSUE _____
Month / Date / Year

DATE EFFECTIVE _____
Month / Date / Year

ISSUED BY Bob Kincer
(Signature of Officer)

TITLE Chairman

BY AUTHORITY OF ORDER OF THE PUBLIC SERVICE COMMISSION
IN CASE NO. 2004-00525 DATED _____

PUBLIC SERVICE COMMISSION
OF KENTUCKY
EFFECTIVE
5/28/2005
PURSUANT TO 807 KAR 5:011
SECTION 9 (1)

By _____
Executive Director

RULES AND REGULATIONS

Z. Legal Disclaimers.

1. The utility shall in no event be held responsible for any claims made against it for reasons of system failure or interruption of service. No persons shall be entitled to damages nor for any portion of a payment refunded for any system failure or interruption of service which in the opinion of the utility is deemed necessary.
2. No person shall maliciously, willfully, or negligently break, damage, destroy, uncover, deface, or tamper with any structure appurtenance or equipment which is a part of the utility's water system. Any person violating this provision will be subject to all legal remedies accorded the district and/or discontinuance of water service and shall pay the cost of repairing or replacing the utility's facilities.
3. If any loss or damage to the property of the utility or any accident or other injury to persons or property is caused by or results from the negligence or wrongful action of a customer, members of his/her household, his/her agent or employee, the cost of necessary repairs or replacements shall be paid by the customer of the utility and any liability otherwise resulting shall be that of the customer.
4. For purposes of fire protection, including any customer's fire protection system, the utility cannot guarantee a water supply at any particular flow rate or pressure. The fire flow may vary depending upon other water demands on the system, various water facility limitations, or other circumstances. The customer will indemnify and hold harmless the utility and its employees from and against all claims, damages, losses, and expenses incurred as a result of insufficient water supply or deficient system facilities.

PUBLIC SERVICE COMMISSION
OF KENTUCKY
EFFECTIVE
5/28/2005
PURSUANT TO 807 KAR 5:011
SECTION 9 (1)

By _____
Executive Director

FOR Entire Area Served
Community, Town or City

P.S.C. KY. NO. _____

1st Revised SHEET NO. 41

South Anderson Water District
(Name of Utility)

CANCELLING P.S.C. KY. NO. _____

Original SHEET NO. 41

RATES & CHARGES

AA. Fire Departments

Any city, county, urban-county, charter county, fire protection district, or volunteer fire protection district ("User") may withdraw water from the utility's water distribution system for fighting fires or training firefighters at no charge on the condition that it maintains estimates of the amount of water used for fire protection and training during each quarter of the year and completes a quarterly usage report and returns this to the district. For training purposes the "user" as described above shall notify the district forty-eight (48) hours in advance of any such water usage from their system as to check with district management on current system conditions and availability of water for this training.

Any User that withdraws water from the utility's water distribution system for fire protection or training purposes and fails to submit the quarterly usage report shall be assessed the cost of this water. A User shall submit a quarterly report even if it withdraws no water for fire protection or training purposes.

A non-reporting User's usage shall be presumed to be 0.3 percent of the utility's total water sales for the calendar month. A non-reporting User may present evidence of its actual usage to rebut the presumed usage. The utility shall consider this evidence and shall adjust the presumed usage amount accordingly.

The non-reporting User shall be billed for this usage at the lowest usage block rate regardless of customer classification that the utility charges.

A non-reporting User shall also be assessed a penalty of two hundred fifty ($250.00) dollars for each failure to submit the required quarterly report in a timely manner.

DATE OF ISSUE _____
Month / Date / Year

DATE EFFECTIVE _____
Month / Date / Year

ISSUED BY Tim Baker
(Signature of Officer)

TITLE TREASURER

BY AUTHORITY OF ORDER OF THE PUBLIC SERVICE COMMISSION
IN CASE NO. _____ DATED _____

KENTUCKY
PUBLIC SERVICE COMMISSION
JEFF R. DEROUEN
EXECUTIVE DIRECTOR
TARIFF BRANCH
Bunt Kirtley
EFFECTIVE
10/11/2014
PURSUANT TO 807 KAR 5:011 SECTION 9 (1)

FOR Entire Area Served
Community, Town or City

P.S.C. KY. NO. _____

Original SHEET NO. 41.1

South Anderson Water District
(Name of Utility)

CANCELLING P.S.C. KY. NO. _____

_____ SHEET NO. _____

RATES & CHARGES

AB. Fire Hydrants

1. In accordance with 807 KAR 5:066 Section 10(2)(b), a new fire hydrant will not be installed unless:
   a. A professional engineer with a Kentucky registration has certified that the system can provide a minimum fire flow of 250 gallons per minute, and
   b. The system supporting this flow has the capability of providing this flow for a period of not less than two (2) hours plus consumption at the maximum daily rate.

2. The location, installation, and the responsibility for maintenance of fire hydrants, public and private fire protection facilities, connecting mains, and their ownership may be subject to negotiation between the utility and the applicant/customer. Fire hydrants and public and private fire protection facilities shall be installed as required by the utility and if owned by the utility shall be subject to any conditions the Public Service Commission may impose, based upon the compensation received for this service.

DATE OF ISSUE _____
Month / Date / Year

DATE EFFECTIVE _____
Month / Date / Year

ISSUED BY Tim Beber
(Signature of Officer)

TITLE TREASURER

BY AUTHORITY OF ORDER OF THE PUBLIC SERVICE COMMISSION
IN CASE NO. _____ DATED _____

KENTUCKY
PUBLIC SERVICE COMMISSION
JEFF R. DEROUEN
EXECUTIVE DIRECTOR
TARIFF BRANCH
Bunt Kirtley
EFFECTIVE
10/11/2014
PURSUANT TO 807 KAR 5:011 SECTION 9 (1)

RULES AND REGULATIONS

AC. Fire Sprinkler Systems. A charge of $25 per month will be assessed for customers with sprinkler systems and private fire protection service to recover the cost of maintaining the service. A double check reduced pressure detector may be installed in lieu of a meter, at the expense of the customer, unless federal or state funds are available for the project. All detector assemblies will be installed pursuant to the district's specification..

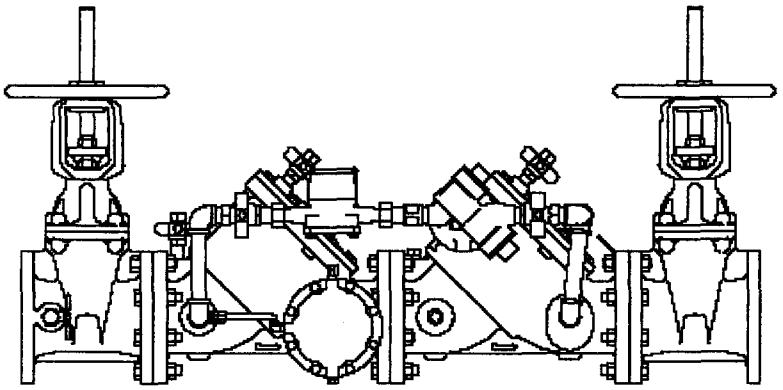

FEBCO MODEL 826YD (2½" - 10")

DATE OF ISSUE _____
Month / Date / Year

DATE EFFECTIVE _____
Month / Date / Year

ISSUED BY Bob Kincer
(Signature of Officer)

TITLE Chairman

BY AUTHORITY OF ORDER OF THE PUBLIC SERVICE COMMISSION
IN CASE NO. 2004-00525 DATED _____

PUBLIC SERVICE COMMISSION
OF KENTUCKY
EFFECTIVE
5/28/2005
PURSUANT TO 807 KAR 5:011
SECTION 9 (1)

By _____
Executive Director

RULES AND REGULATIONS

AD. Water Main Extensions.

1. Normal Extension:. An extension of fifty (50) feet or less shall be made by a utility to its existing distribution main without charge for a prospective customer who shall apply for and contract to use service for one (1) year or more.

2. Other Extensions: Other extensions will be made in accordance with 807 KAR 5:066, Section 11 (2) (2). When an extension of the utility's main to serve an applicant or group of applicants amounts to more than fifty (50) feet per applicant, the utility may if not inconsistent with its filed tariff require the total cost of the excessive footage over fifty (50) feet per customer to be deposited with the utility by the applicant or the applicants. Based on the average estimated cost per foot of the total extension.

3. For a period of five (5) years after construction of the extension, each additional customer whose service line is directly connected to the extension installed, and not to the extensions or laterals therefrom, shall be required to contribute to the cost of the extension based on a recomputation of both the utility's portion of the cost and the amount contributed by the customers. The utility shall refund to those customers that have previously contributed to the cost of the extension t hat amount necessary to reduce their contribution to the currently calculated amount for each customer connected to the extension. All customers directly connected to the extension for a five (5) year period after it is placed into service shall contribute equally to the cost of the construction of the extension. In no case shall the total amount refunded exceed the amount paid by the utility.

4. Each customer shall pay the approved tap on fee applicable at the time of application for the meter connection. The tap on fee shall not be considered part of the refundable cost of the extension and may be charged during the refund period. After the five year refund period expires, any additional customers shall be connected to the extension for the amount of the approved tap on fee only.

PUBLIC SERVICE COMMISSION
OF KENTUCKY
EFFECTIVE
5/28/2005
PURSUANT TO 807 KAR 5:011
SECTION 9 (1)

By _____
Executive Director

RULES AND REGULATIONS

5. No water distribution main extension shall be constructed or connected to South Anderson Water District's water distribution system without first obtaining the district's approval.
6. *If South Anderson determines that a larger size line is needed for future growth or* infrastructure improvements, South Anderson Water District will pay the difference between the cost for the line to service the extension and the larger size line needed for general system improvements.
7. Nothing contained herein shall be construed to prohibit the utility from making extensions under different arrangements if such arrangements have received the prior approval of the Public Service Commission.

AE. Extension Procedures for Developers and/or New Subdivisions.

1. Nothing contained herein shall be construed to prohibit the utility from contracting to make extensions under different arrangements for a developer.

AF. Multi Rates to Multi-Unit Premises

The utility no longer allows multi unit premises to share a water meter. All future applicants for service are required to have a water meter installed.

PUBLIC SERVICE COMMISSION
OF KENTUCKY
EFFECTIVE
5/28/2005
PURSUANT TO 807 KAR 5:011
SECTION 9 (1)

By _____
Executive Director

RECEIVED
SEP 05 2007
PUBLIC SERVICE
COMMISSION

FOR South Anderson Water District
Community, Town or City

P.S.C. KY. NO. 1

1 SHEET NO. 10

CANCELLING P.S.C. KY. NO. 27

1 SHEET NO. 1

South Anderson Water District
(Name of Utility)

RULES AND REGULATIONS

APPLICATIONS FOR WATER MAIN EXTENSIONS TO PROPOSED REAL ESTATE DEVELOPMENTS

I. APPLICABILITY. This section shall apply to requests for water service to proposed real estate developments.

II. APPLICANT'S RIGHT TO DESIGN AND CONSTRUCT THE MAIN EXTENSION. An Applicant desiring a water main extension to a proposed real estate development may elect to design and construct the proposed main extension or to contract with the Water District for the design of these facilities.

III. RESPONSIBILITIES OF AN APPLICANT. An Applicant for water service to a proposed real estate development shall have the following responsibilities:

A. If the Applicant is assuming responsibility for the design of the proposed water distribution main:

1. Applicant shall provide the Water District or its designated representative with all preliminary plans and specifications of the proposed water main extension and any other documents as reasonably necessary to review Applicant's request for service. All preliminary plans and specifications shall be prepared by a professional engineer who is licensed to practice engineering in the Commonwealth of Kentucky.

2. Applicant shall make all reasonable modifications to the plans and specifications of the proposed water distribution main extensions that the Water District or its designated representative requests and that are reasonably necessary to ensure the quality and reliability of water service or the Water District's operational efficiency and integrity and that are consistent with accepted engineering standards.

DATE OF ISSUE 9-5-2007
Month / Date / Year

DATE EFFECTIVE 8-16-2007
Month / Date / Year

ISSUED BY Eddie Stevens by R
(Signature of Officer)

TITLE Chairman, SAWD

BY AUTHORITY OF ORDER OF THE PUBLIC SERVICE COMMISSION
IN CASE NO. 2006-00118 DATED 8-16-2007

PUBLIC SERVICE COMMISSION
OF KENTUCKY
EFFECTIVE
8/16/2007
PURSUANT TO 807 KAR 5:011
SECTION 9 (1)

By
Executive Director

FOR South Anderson Water District
Community, Town or City

P.S.C. KY. NO. 1

2 SHEET NO. 10

South Anderson Water District
(Name of Utility)

CANCELLING P.S.C. KY. NO. 27

1 SHEET NO. 1

RULES AND REGULATIONS

3. Prior to its submission of final plans and specifications for the proposed water distribution main extension to the Division of Water, Environmental and Public Protection Cabinet, Applicant shall obtain the Water District's approval of such plans and specifications.

4. Applicant shall reimburse the Water District for all expenses that the Water District incurs in its review of Applicant's proposed plans and specifications, inspection of constructed facilities, and any other reasonable actions necessary to facilitate the construction of the proposed water distribution mains. The Applicant may be required to deposit with the Water District at the time of executing an "Agreement For Water Main Extension to Serve A Real Estate Development" an amount equal to the Water District's estimate of these costs.

5. Applicant shall permit Water District employees, agents, or representatives reasonable access to the proposed real estate development upon reasonable notice and at reasonable hours.

6. Applicant shall obtain all necessary approvals from county planning and zoning commissions.

7. Applicant shall be responsible for the cost of the proposed water lines and appurtenant facilities, all costs arising out of the inspection and testing of water lines, and any and all legal fees resulting from the placement and construction of the proposed water lines.

8. Applicant shall advise the Water District or its designated representative of the date and time for the commencement of construction and installation of all water mains within the proposed real estate development.

9. Applicant shall not cover with soil or other material any portion of the proposed water main extension until the Water District or its designated representative has inspected the water main. He shall notify the Water District or its designated representative at least 24 hours in advance of any action to cover any portion of the proposed water mains.

DATE OF ISSUE 9-5-2007
Month / Date / Year

DATE EFFECTIVE 8-16-2007
Month / Date / Year

ISSUED BY Eddie Stevens
by R
(Signature of Officer)

TITLE Chairman, SAWD

BY AUTHORITY OF ORDER OF THE PUBLIC SERVICE COMMISSION
IN CASE NO. 2006-00118 DATED 8-16-2007

PUBLIC SERVICE COMMISSION
OF KENTUCKY
EFFECTIVE
8/16/2007
PURSUANT TO 807 KAR 5:011
SECTION 9 (1)

By
Executive Director

South Anderson Water District
(Name of Utility)

RULES AND REGULATIONS

10. Applicant shall not test the proposed water main extension for leakage or contamination without the Water District's prior knowledge and agreement. Applicant shall notify the Water District or its designated representative at least 24 hours in advance of any action to cover or to test water mains.

11. Applicant shall grant to the Water District an easement sufficient to install, repair, replace, or construct any facilities necessary to distribute and meter water to the proposed real estate development and to each parcel of property located within the development.

12. Applicant shall, upon completion of construction of the proposed water distribution mains, notify the Water District in writing of the completion.

13. Within 60 days of completion of construction of the proposed water distribution mains, the Applicant shall furnish to the Water District a copy of the as-built plans for the mains.

14. Upon completion of proposed water distribution mains and the Water District's preliminary acceptance of the water distribution mains, Applicant shall grant to the Water District the right and authority to provide water service through the water distribution main. Applicant shall retain all ownership rights in the water distribution mains and all easements for property on which the water distribution main is situated and shall be responsible for the operation and performance of such water distribution mains and for any expenses or costs related to their maintenance or repair for a period of 12 months from the date of the preliminary acceptance.

15. Within 60 days of the Water District's preliminary acceptance of the water distribution mains, the Applicant shall provide to the Water District a written statement of the mains' total cost, itemizing in detail the components of the total cost.

16. At the time of submitting its application, Applicant shall execute an "Agreement for Water Main Extension to Serve a Real Estate Development" similar in form and content to that shown in Appendix A.

PUBLIC SERVICE COMMISSION
OF KENTUCKY
EFFECTIVE
8/16/2007
PURSUANT TO 807 KAR 5:011
SECTION 9 (1)

By
Executive Director

RULES AND REGULATIONS

B. If the Applicant contracts with the Water District for the design of the proposed water distribution main:

1. Applicant shall provide the Water District or its designated representative with all preliminary plans and specifications of the proposed real estate development and proposed water main extension and any other documents as reasonably necessary to review Applicant's request for service.

2. At the time of executing an "Agreement for Water Main Extension to Serve a Real Estate Development" with the Water District, Applicant shall deposit with the Water District an amount equal to the estimated cost of design. During the course of the construction, the Water District may draw upon the deposited amount to pay such costs. If the Water District incurs any costs of design in excess of the deposited amount, Applicant shall pay such charges within 30 days of presentation of a Statement of Costs by the Water District. Applicant shall pay the total cost of design of the proposed water lines and appurtenant facilities. "Cost of design" includes, but is not limited to, all costs associated with the engineering and design of the proposed water distribution mains, fees for permits, inspections and licenses, and costs incurred in the acquisition of easements (including attorney fees and court costs).

3. Applicant shall be responsible for the cost of the proposed water distribution mains and appurtenant facilities, all costs arising out of the inspection and testing of those mains, and any and all legal fees resulting from the placement and construction of those mains.

4. Applicant shall make all reasonable modifications to the plans and specifications of the proposed water distribution main extensions that the Water District or its designated representative requests and that are reasonably necessary to ensure the quality and reliability of water service or the Water District's operational efficiency and integrity and that are consistent with accepted engineering standards.

5. Applicant shall permit Water District employees, agents, or representatives reasonable access to the proposed real estate development upon reasonable notice and at reasonable hours.

PUBLIC SERVICE COMMISSION
OF KENTUCKY
EFFECTIVE
8/16/2007
PURSUANT TO 807 KAR 5:011
SECTION 9 (1)

By
Executive Director

FOR South Anderson Water District
Community, Town or City

P.S.C. KY. NO. 1

5 SHEET NO. 10

CANCELLING P.S.C. KY. NO. 27

1 SHEET NO. 1

South Anderson Water District
(Name of Utility)

RULES AND REGULATIONS

6. Applicant shall obtain all necessary approvals from county planning and zoning commissions.

7. Applicant shall advise the Water District or its designated representative of the date and time for the commencement of construction and installation of all water mains within the proposed real estate development.

8. Applicant shall not cover with soil or other material any portion of the proposed water main extension until the Water District or its designated representative has inspected the water main. He shall notify the Water District or its designated representative at least 24 hours in advance of any action to cover any portion of the proposed water mains.

9. Applicant shall not test the proposed water main extension for leakage or contamination without the Water District's prior knowledge and agreement. Applicant shall notify the Water District or its designated representative at least 24 hours in advance of any action to cover or to test water mains.

10. Applicant shall grant to the Water District an easement sufficient to install, repair, replace, or construct any facilities necessary to distribute and meter water to the proposed real estate development and to each parcel of property located within the development.

11. Upon completion of proposed water distribution mains and the Water District's preliminary acceptance of the water distribution mains, Applicant shall grant to the Water District the right and authority to provide water service through the water distribution main. Applicant shall retain all ownership rights in the water distribution mains and all easements for property on which the water distribution main is situated and shall be responsible for the operation and performance of such water distribution mains and for any expenses or costs related to their maintenance or repair for a period of 12 months from the date of the preliminary acceptance.

DATE OF ISSUE 9-5-2007
Month / Date / Year

DATE EFFECTIVE 8-16-2007
Month / Date / Year

ISSUED BY Eddie Stevens
(Signature of Officer)

TITLE Chairman, SAWD

BY AUTHORITY OF ORDER OF THE PUBLIC SERVICE COMMISSION
IN CASE NO. 2006-00118 DATED 8-16-2007

PUBLIC SERVICE COMMISSION
OF KENTUCKY
EFFECTIVE
8/16/2007
PURSUANT TO 807 KAR 5:011
SECTION 9 (1)

By
Executive Director

RULES AND REGULATIONS

12. Within 60 days of the Water District's preliminary acceptance of the water distribution mains, the Applicant shall provide to the Water District a written statement of the mains' total cost, itemizing in detail the components of the total cost.

13. At the time of submitting its application, Applicant shall execute a "Agreement for Water Main Extension to Serve a Real Estate Development" similar in form and content to that shown in Appendix B.

14. Applicant shall provide the Water District with his mailing address and shall maintain a current mailing address with the Water District for the 10-year period following the Water District's preliminary acceptance of the water distribution system.

IV. WATER DISTRICT'S RESPONSIBILITIES. The Water District shall have the following responsibilities:

A. In those instances where the Applicant designs the proposed water distribution main:

1. Water District or its designated representative shall examine all plans and specifications for the proposed water distribution main extension and shall advise Applicant of any and all modifications that are reasonably necessary to ensure the quality and reliability of water service or the Water District's operational efficiency and integrity and that are consistent with accepted engineering standards.

2. Water District or its designated representative shall promptly inspect the proposed water main extension after receiving proper notice from the Applicant of its intent to cover the main with soil or other material.

3. Water District or its designated representative shall promptly advise Applicant of its decision on any testing of the proposed water distribution main upon receiving proper notice of the Applicant's intent to test the main.

PUBLIC SERVICE COMMISSION
OF KENTUCKY
EFFECTIVE
8/16/2007
PURSUANT TO 807 KAR 5:011
SECTION 9 (1)

By
Executive Director

RULES AND REGULATIONS

4. Water District agrees to make preliminary acceptance of the donation of complete water distribution mains from the Applicant upon certification of a person who is licensed in the Commonwealth of Kentucky as a professional engineer that the water distribution lines are constructed in accordance with its plans and specifications, as approved by the Environmental and Public Protection Cabinet and the Water District, and with accepted engineering practices.

5. The Water District shall exercise reasonable efforts to the extent permitted by law to assist the Applicant in determining the route of the proposed water distribution main.

6. Within 60 days of its receipt of Applicant's written statement of the water distribution mains' total cost, the Water District shall advise Applicant of its acceptance of the stated cost or request additional information to support Applicant's statement of total cost. If Water District does not accept Applicant's statement of cost, it shall advise the Applicant of its reasons for rejecting the Applicant's statement and shall state its estimate of the total cost of the water distribution mains.

7. Upon its preliminary acceptance of the water distribution main, the Water District shall begin providing water service to any person applying for service through these mains.

8. Water District shall make its final acceptance of the water distribution main and related appurtenances and shall assume ownership and all responsibility for its operation and maintenance after one year of operation without a significant leak or maintenance problem.

9. Each year, for a period of 10 years following its preliminary acceptance of the water distribution main, the Water District shall refund to the Applicant a sum equal to the cost of 50 feet of the distribution main installed for each new customer connected during the year whose service line is directly connected to the distribution main, and not to extensions or laterals therefrom. The Water District's total refunds to the Applicant for the water distribution main, however, shall not exceed the "maximum

PUBLIC SERVICE COMMISSION
OF KENTUCKY
EFFECTIVE
8/16/2007
PURSUANT TO 807 KAR 5:011
SECTION 9 (1)

By
Executive Director

RULES AND REGULATIONS

cumulative refund amount."* If the Water District's required refund for an annual period would result in total cumulative refunds to the Applicant for the water distribution main exceeding the "maximum cumulative refund amount," the Water District shall credit the amount in excess of the "maximum cumulative refund amount" to the next annual period for refund. Total amount refunded shall not exceed water distribution mains' total cost. No refund shall be made for connections made to water distribution mains after the refund period ends. The Water District shall make refund payments to the Applicant within 30 days of the anniversary of the preliminary acceptance of the water distribution mains.

B. In those instances where the Applicant contracts with the Water District for the design of the proposed water distribution main:

1. The Water District shall retain the services of a professional engineer licensed by the state of Kentucky to prepare and/or examine all plans and specifications for the proposed water distribution main extension. It shall advise Applicant of all modifications that are reasonably necessary to ensure the quality and reliability of water service or the Water District's operational efficiency and integrity and that are consistent with accepted engineering standards.

2. The Water District shall submit the plans and specifications of the proposed water main distribution, as modified by the retained professional engineer, to the Division of Water, Kentucky Environmental and Public Protection Cabinet and apply for that agency's approval of those plans and specifications.

3. The Water District shall apply for the necessary regulatory permits or approvals from all other state agencies that exercise jurisdiction over the proposed water distribution main extensions.

4. The Water District will provide all inspection and engineering services required for the construction of the proposed water distribution mains.

---

* "Maximum Cumulative Refund Amount" = Total Cost of Water Distribution Mains x Number of Years Elapsed Since Preliminary Acceptance of Water Distribution Mains x .10.

PUBLIC SERVICE COMMISSION
OF KENTUCKY
EFFECTIVE
8/16/2007
PURSUANT TO 807 KAR 5:011
SECTION 9 (1)

By
Executive Director

RULES AND REGULATIONS

5. Upon receipt of the retained professional engineer's certification that the water distribution lines are constructed in accordance with its plans and specifications, as approved by the Environmental and Public Protection Cabinet and the Water District, and with accepted engineering practices, the Water District shall make its preliminary acceptance of the proposed water distribution main and any related appurtenances.

6. The Water District shall pay all reasonable engineering and design costs related to the services provided by the retained professional engineer. Such payments will be made from the funds that the Applicant deposited with the Water District at the time of executing the Agreement for Water Main Extension to Serve a Real Estate Development.

7. The Water District shall exercise reasonable efforts to the extent permitted by law to assist the Applicant in determining the route of the proposed water distribution main.

8. Water District shall make its final acceptance of the water distribution main and related appurtenances and shall assume ownership and all responsibility for its operation and maintenance after one year of operation without a significant leak or maintenance problem.

9. Water District shall prepare all documents necessary for the Applicant to convey an easement sufficient to install, repair, replace, or construct any facilities necessary to distribute and meter water to the proposed real estate development and to each parcel of property located within the development.

10. Each year, for a period of 10 years following its preliminary acceptance of the water distribution main, the Water District shall refund to the Applicant a sum equal to the cost of 50 feet of the distribution main installed for each new customer connected during the year whose service line is directly connected to the distribution main, and not to extensions or laterals therefrom. The Water District's total refunds to the Applicant for the water distribution main, however, shall not exceed the "maximum

PUBLIC SERVICE COMMISSION
OF KENTUCKY
EFFECTIVE
8/16/2007
PURSUANT TO 807 KAR 5:011
SECTION 9 (1)

By
Executive Director

RULES AND REGULATIONS

cumulative refund amount."* If the Water District's required refund for an annual period would result in total cumulative refunds to the Applicant for the water distribution main exceeding the "maximum cumulative refund amount," the Water District shall credit the amount in excess of the "maximum cumulative refund amount" to the next annual period for refund. Total amount refunded shall not exceed water distribution mains' total cost. No refund shall be made for connections made to water distribution mains after the refund period ends. The Water District shall make refund payments to the Applicant within 30 days of the anniversary of the preliminary acceptance of the water distribution mains.

V. NOTIFICATIONS. **Unless otherwise designated in writing, all notifications required under this section shall be made to: [Insert Appropriate Official, Address, Telephone Number].**

VI. **Except where a conflict exists between the provisions of this Section and the provisions of Administrative Regulation 807 KAR 5:066, Section 11, the provisions of Administrative Regulation 807 KAR 5:066, Section 11, shall apply to all extensions made pursuant to this Section.**

* "Maximum Cumulative Refund Amount" = Total Cost of Water Distribution Mains x Number of Years Elapsed Since Preliminary Acceptance of Water Distribution Mains x .10.

DATE OF ISSUE 9-5-2007
Month / Date / Year

DATE EFFECTIVE 8-16-2007
Month / Date / Year

ISSUED BY Eddie Stevens
(Signature of Officer)

TITLE Chairman, SAWD

BY AUTHORITY OF ORDER OF THE PUBLIC SERVICE COMMISSION
IN CASE NO. 2006-00118 DATED 8-16-2007

PUBLIC SERVICE COMMISSION
OF KENTUCKY
EFFECTIVE
8/16/2007
PURSUANT TO 807 KAR 5:011
SECTION 9 (1)

By
Executive Director

APPENDIX A
AGREEMENT FOR WATER MAIN EXTENSION
TO SERVE A REAL ESTATE DEVELOPMENT

This AGREEMENT, made and entered into on this the _____ day of _____, _____, by and between the SOUTH ANDERSON WATER DISTRICT ("Water District") and _____, ("the Applicant").

WITNESSETH:

WHEREAS, the Applicant owns real estate that is located within the Water District's boundaries; and,

WHEREAS, the Applicant's real estate development is more accurately described as _____**(provide description of property)**_____; and,

WHEREAS, the Applicant proposes to develop its real estate development and requires an extension of the Water District's water mains to have water service provided to the proposed real estate development; and,

WHEREAS it is the Parties' desire to provide safe and potable water to the proposed real estate development;

NOW, THEREFORE, the Parties agree as follows:

THE APPLICANT SHALL HAVE THE FOLLOWING RESPONSIBILITIES:

1. Applicant shall provide the Water District or its designated representative with all preliminary plans and specifications of the proposed water main extension and any other documents as reasonably necessary to review Applicant's request for service. All preliminary plans and specifications shall be prepared by a professional engineer who is licensed to practice engineering in the Commonwealth of Kentucky.

2. Applicant shall make all reasonable modifications to the plans and specifications of the proposed water distribution main extensions that the Water District or its designated

PUBLIC SERVICE COMMISSION
OF KENTUCKY
EFFECTIVE
8/16/2007
PURSUANT TO 807 KAR 5:011
SECTION 9 (1)
By_____
Executive Director

representative requests and that are reasonably necessary to ensure the quality and reliability of water service or the Water District's operational efficiency and integrity and that are consistent with accepted engineering standards.

3. Prior to its submission of final plans and specifications for the proposed water distribution main extension to the Division of Water, Environmental and Public Protection Cabinet, Applicant shall obtain the Water District's approval of such plans and specifications.

4. Applicant shall reimburse the Water District for all expenses that the Water District incurs in its review of Applicant's proposed plans and specifications, inspection of constructed facilities, and any other reasonable actions necessary to facilitate the construction of the proposed water distribution mains. The Applicant shall deposit with the Water District at the execution of this Agreement **[Enter Amount of Deposit]**, which is the Water District's estimate of these costs.

5. Applicant shall permit Water District employees, agents, or representatives reasonable access to the proposed real estate development upon reasonable notice and at reasonable hours.

6. Applicant shall obtain all necessary approvals from county planning and zoning commissions.

7. Applicant shall be responsible for the cost of the proposed water lines and appurtenant facilities, all costs arising out of the inspection and testing of water lines, and any and all legal fees resulting from the placement and construction of the proposed water lines.

8. Applicant shall advise the Water District or its designated representative of the date and time for the commencement of construction and installation of all water mains within the proposed real estate development.

PUBLIC SERVICE COMMISSION
OF KENTUCKY
EFFECTIVE
8/16/2007
PURSUANT TO 807 KAR 5:011
SECTION 9 (1)

By_____
Executive Director

9. Applicant shall not cover with soil or other material any portion of the proposed water main extension until the Water District or its designated representative has inspected the water main. He shall notify the Water District or its designated representative at least 24 hours in advance of any action to cover any portion of the proposed water mains.

10. Applicant shall not test the proposed water main extension for leakage or contamination without the Water District's prior knowledge and agreement. Applicant shall notify the Water District or its designated representative at least 24 hours in advance of any action to cover or to test water mains.

11. Applicant shall grant to the Water District an easement sufficient to install, repair, replace, or construct any facilities necessary to distribute and meter water to the proposed real estate development and to each parcel of property located within the development.

12. Upon completion of construction of the proposed water distribution mains, Applicant shall notify the Water District in writing of the completion.

13. Within 60 days of completion of construction of the proposed water distribution mains, the Applicant shall furnish to the Water District a copy of the as-built plans for the mains.

14. Upon completion of proposed water distribution mains and the Water District's preliminary acceptance of the water distribution mains, Applicant shall grant to the Water District the right and authority to provide water service through the water distribution main. Applicant shall retain all ownership rights in the water distribution mains and all easements for property on which the water distribution main is situated and shall be responsible for the operation and performance of such water distribution mains and for any expenses or costs related to their maintenance or repair for a period of 12 months from the date of the preliminary acceptance.

PUBLIC SERVICE COMMISSION
OF KENTUCKY
EFFECTIVE
8/16/2007
PURSUANT TO 807 KAR 5:011
SECTION 9 (1)

By_____
Executive Director

15. Within 60 days of the Water District's preliminary acceptance of the water distribution mains, the Applicant shall provide to the Water District a written statement of the mains' total cost, itemizing in detail the components of the total cost.

THE WATER DISTRICT SHALL HAVE THE FOLLOWING RESPONSIBILITIES:

1. Water District or its designated representative shall examine all plans and specifications for the proposed water distribution main extension and shall advise Applicant of any and all modifications that are reasonably necessary to ensure the quality and reliability of water service or the Water District's operational efficiency and integrity and that are consistent with accepted engineering standards.

2. Water District or its designated representative shall promptly inspect the proposed water main extension after receiving proper notice from the Applicant of its intent to cover the main with soil or other material.

3. Water District or its designated representative shall promptly advise Applicant of its decision on any testing of the proposed water distribution main upon receiving proper notice of the Applicant's intent to test the main.

4. Water District agrees to preliminarily accept the Applicant's donation of completed water distribution mains upon receiving certification from a person who is licensed in the Commonwealth of Kentucky as a professional engineer that the water distribution lines are constructed in accordance with its plans and specifications, as approved by the Environmental and Public Protection Cabinet and the Water District, and with accepted engineering practices.

5. The Water District shall exercise reasonable efforts to the extent permitted by law to assist the Applicant in determining the route of the proposed water distribution main.

6. Within 60 days of its receipt of Applicant's written statement of the water distribution mains' total cost, the Water District shall advise Applicant of its acceptance of the stated cost or

PUBLIC SERVICE COMMISSION
OF KENTUCKY
EFFECTIVE
8/16/2007
PURSUANT TO 807 KAR 5:011
SECTION 9 (1)
By
Executive Director

request additional information to support Applicant's statement of total cost. If the Water District does not accept Applicant's statement of cost, it shall advise the Applicant of its reasons for rejecting the Applicant's statement and shall state its estimate of the total cost of the water distribution mains.

7. Upon its preliminary acceptance of the water distribution main, the Water District shall begin providing water service to any person applying for service through these mains.

8. The Water District shall make its final acceptance of the water distribution main and related appurtenances and shall assume ownership and all responsibility for its operation and maintenance after one year of operation without a significant leak or maintenance problem.

9. Each year, for a period of 10 years following its preliminary acceptance of the water distribution main, the Water District shall refund to the Applicant a sum equal to the cost of 50 feet of the distribution main installed for each new customer connected during the year whose service line is directly connected to the distribution main, and not to extensions or laterals therefrom. The Water District's total refunds to the Applicant for the water distribution main, however, shall not exceed the "maximum cumulative refund amount." ("Maximum Cumulative Refund Amount" equals the Total Cost of Water Distribution Mains multiplied by the Number of Years Elapsed since Preliminary Acceptance of Water Distribution Mains multiplied by 0.10.) If the Water District's required refund for an annual period would result in total cumulative refunds to the Applicant for the water distribution main exceeding the "maximum cumulative refund amount," the Water District shall credit the amount in excess of the "maximum cumulative refund amount" to the next annual period for refund. Total amount refunded shall not exceed water distribution mains' total cost. No refund shall be made for connections made to water distribution mains after the refund period ends. The Water District shall make refund payments to the Applicant within 30 days of the anniversary of the preliminary acceptance of the water distribution mains.

PUBLIC SERVICE COMMISSION
OF KENTUCKY
EFFECTIVE
8/16/2007
PURSUANT TO 807 KAR 5:011
SECTION 9 (1)
By _____
Executive Director

THE PARTIES FURTHER AGREE THAT unless otherwise designated in writing, all notifications required under this section shall be made to:

South Anderson Water District:	Applicant:
_____	_____
_____	_____
_____	_____
_____	_____

Dated this the day and year first written above.

SOUTH ANDERSON WATER DISTRICT	APPLICANT
_____	_____
_____	_____
Position	Position

PUBLIC SERVICE COMMISSION
OF KENTUCKY
EFFECTIVE
8/16/2007
PURSUANT TO 807 KAR 5:011
SECTION 9 (1)

By_____
Executive Director

APPENDIX B
AGREEMENT FOR WATER MAIN EXTENSION
TO SERVE A REAL ESTATE DEVELOPMENT

This AGREEMENT, made and entered into on this the _____ day of _____, _____, by and between the SOUTH ANDERSON WATER DISTRICT ("Water District") and _____, ("the Applicant").

W I T N E S S E T H :

WHEREAS, the Applicant owns real estate that is located within the Water District's boundaries; and,

WHEREAS, the Applicant's real estate development is more accurately described as _____**(provide description of property)**_____; and,

WHEREAS, the Applicant proposes to develop its real estate development and requires an extension of the Water District's water mains to have water service provided to the proposed real estate development; and,

WHEREAS it is the Parties' desire to provide safe and potable water to the proposed real estate development; and,

WHEREAS, the Applicant desires the Water District to provide the design and engineering services necessary for the construction of the water mains necessary to serve the real estate development;

NOW, THEREFORE, the Parties agree as follows:

THE APPLICANT SHALL HAVE THE FOLLOWING RESPONSIBILITIES:

1. Applicant shall provide the Water District or its designated representative with all preliminary plans and specifications of the proposed water main extension and any other documents as reasonably necessary to review Applicant's request for service. All preliminary

PUBLIC SERVICE COMMISSION
OF KENTUCKY
EFFECTIVE
8/16/2007
PURSUANT TO 807 KAR 5:011
SECTION 9 (1)

By_____
Executive Director

plans and specifications shall be prepared by a professional engineer who is licensed to practice engineering in the Commonwealth of Kentucky.

2. At the time of executing this Agreement, Applicant shall deposit **[Enter Amount of Deposit]** with the Water District an amount equal to the estimated design costs. During the course of construction of the proposed water distribution main, the Water District may draw upon the deposited amount to pay such costs. If the Water District incurs any design costs in excess of the deposited amount, Applicant shall pay such charges within 30 days of presentation of a Statement of Costs by the Water District. Applicant shall pay the total cost of design of the proposed water lines and appurtenant facilities. "Design costs" include, but are not limited to, all costs associated the engineering and design of the proposed water distribution mains, fees for permits, inspections and licenses, and costs incurred in the acquisition of easements (including attorney fees and court costs).

3. Applicant shall be responsible for the cost of the proposed water lines and appurtenant facilities, all costs arising out of the inspection and testing of water lines, and any and all legal fees resulting from the placement and construction of the proposed water lines.

4. Applicant shall make all reasonable modifications to the plans and specifications of the proposed water distribution main extensions that the Water District or its designated representative requests and that are reasonably necessary to ensure the quality and reliability of water service or the Water District's operational efficiency and integrity and that are consistent with accepted engineering standards.

5. Applicant shall permit Water District employees, agents, or representatives reasonable access to the proposed real estate development upon reasonable notice and at reasonable hours.

PUBLIC SERVICE COMMISSION
OF KENTUCKY
EFFECTIVE
8/16/2007
PURSUANT TO 807 KAR 5:011
SECTION 9 (1)

By _____
Executive Director

6. Applicant shall obtain all necessary approvals from county planning and zoning commissions.

7. Applicant shall advise the Water District or its designated representative of the date and time for the commencement of construction and installation of all water mains within the proposed real estate development.

8. Applicant shall not cover with soil or other material any portion of the proposed water main extension until the Water District or its designated representative has inspected the water main. He shall notify the Water District or its designated representative at least 24 hours in advance of any action to cover any portion of the proposed water mains.

9. Applicant shall not test the proposed water main extension for leakage or contamination without the Water District's prior knowledge and agreement. Applicant shall notify the Water District or its designated representative at least 24 hours in advance of any action to cover or to test water mains.

10. Applicant shall grant to the Water District an easement sufficient to install, repair, replace, or construct any facilities necessary to distribute and meter water to the proposed real estate development and to each parcel of property located within the development.

11. Upon completion of proposed water distribution mains and the Water District's preliminary acceptance of the water distribution mains, Applicant shall grant to the Water District the right and authority to provide water service through the water distribution main. Applicant shall retain all ownership rights in the water distribution mains and all easements for property on which the water distribution main is situated and shall be responsible for the operation and performance of such water distribution mains and for any expenses or costs related to their maintenance or repair for a period of 12 months from the date of the preliminary acceptance.

PUBLIC SERVICE COMMISSION
OF KENTUCKY
EFFECTIVE
8/16/2007
PURSUANT TO 807 KAR 5:011
SECTION 9 (1)

By _____
Executive Director

12. Within 60 days of the Water District's preliminary acceptance of the water distribution mains, the Applicant shall provide to the Water District a written statement of the mains' total cost, itemizing in detail the components of the total cost.

THE WATER DISTRICT SHALL HAVE THE FOLLOWING RESPONSIBILITIES:

1. The Water District shall retain the services of a professional engineer licensed by the state of Kentucky to prepare and/or examine all plans and specifications for the proposed water distribution main extension. It shall advise Applicant of all modifications that are reasonably necessary to ensure the quality and reliability of water service or the Water District's operational efficiency and integrity and that are consistent with accepted engineering standards.

2. The Water District shall submit the plans and specifications of the proposed water main distribution, as modified by the retained professional engineer, to the Division of Water, Kentucky Environmental and Public Protection Cabinet and apply for that agency's approval of those plans and specifications.

3. The Water District shall apply for the necessary regulatory permits or approvals from all other state agencies that exercise jurisdiction over the proposed water distribution main extensions.

4. The Water District will provide all inspection and engineering services required for the construction of the proposed water distribution mains.

5. Upon receipt of the retained professional engineer's certification that the water distribution lines are constructed in accordance with its plans and specifications, as approved by the Environmental and Public Protection Cabinet and the Water District, and with accepted engineering practices, the Water District shall make its preliminary acceptance of the proposed water distribution main and any related appurtenances.

PUBLIC SERVICE COMMISSION
OF KENTUCKY
EFFECTIVE
8/16/2007
PURSUANT TO 807 KAR 5:011
SECTION 9 (1)

By_____
Executive Director

6. The Water District shall pay all reasonable engineering and design costs related to the services provided by the retained professional engineer. Such payments will be made from the funds that the Applicant deposited with the Water District at the time of executing the Agreement for Water Main Extension to Serve a Real Estate Development.

7. The Water District shall exercise reasonable efforts to the extent permitted by law to assist the Applicant in determining the route of the proposed water distribution main.

8. Water District shall make its final acceptance of the water distribution main and related appurtenances and shall assume ownership and all responsibility for its operation and maintenance after one year of operation without a significant leak or maintenance problem.

9. Water District shall prepare all documents necessary for the Applicant to convey an easement sufficient to install, repair, replace, or construct any facilities necessary to distribute and meter water to the proposed real estate development and to each parcel of property located within the development.

10. Each year, for a period of 10 years following its preliminary acceptance of the water distribution main, the Water District shall refund to the Applicant a sum equal to the cost of 50 feet of the distribution main installed for each new customer connected during the year whose service line is directly connected to the distribution main, and not to extensions or laterals therefrom. The Water District's total refunds to the Applicant for the water distribution main, however, shall not exceed the "maximum cumulative refund amount." ("Maximum Cumulative Refund Amount" equals the Total Cost of Water Distribution Mains multiplied by the Number of Years Elapsed since Preliminary Acceptance of Water Distribution Mains multiplied by 0.10.) If the Water District's required refund for an annual period would result in total cumulative refunds to the Applicant for the water distribution main exceeding the "maximum cumulative refund amount," the Water District shall credit the amount in excess of the "maximum cumulative refund amount"

PUBLIC SERVICE COMMISSION
OF KENTUCKY
EFFECTIVE
8/16/2007
PURSUANT TO 807 KAR 5:011
SECTION 9 (1)
By _____
Executive Director

to the next annual period for refund. Total amount refunded shall not exceed water distribution mains' total cost. No refund shall be made for connections made to water distribution mains after the refund period ends. The Water District shall make refund payments to the Applicant within 30 days of the anniversary of the preliminary acceptance of the water distribution mains.

THE PARTIES FURTHER AGREE THAT unless otherwise designated in writing, all notifications required under this section shall be made to:

South Anderson Water District:	Applicant:
_____	_____
_____	_____
_____	_____
_____	_____

Dated this the day and year first written above.

SOUTH ANDERSON WATER DISTRICT	APPLICANT
_____	_____
_____	_____
Position	Position

PUBLIC SERVICE COMMISSION
OF KENTUCKY
EFFECTIVE
8/16/2007
PURSUANT TO 807 KAR 5:011
SECTION 9 (1)

By _____
Executive Director

SOUTH ANDERSON WATER DISTRICT
142 S MAIN ST
PO BOX 17
LAWRENCEBURG KY 40342-0017
TEMP - RETURN SERVICE REQUESTED

Please visit us at: www.southandersonwater.com

INVOICE DATE	03/06/2015
ACCOUNT NUMBER	
AMOUNT DUE	**$28.91**
AMOUNT AFTER DUE DATE	$31.80 due after 03/25/15

Name:
Address

DUE DATE: 03/25/2015

SERVICE ADDRESS:

Office Hours: Monday-Friday 8:00 AM - 4:30 PM
Closed 12:00 - 1:00 for lunch
Phone: (502) 839-6919

TYPE OF SERVICE	SERVICE PERIOD		METER READING		ACTUAL USAGE IN GALLONS	AMOUNT
	FROM	TO	PREVIOUS	CURRENT		
Water	01/19/2015	02/25/2015	204900	207800	2900	28.07
3% School Tax						0.84

SOUTH ANDERSON SAWD WATER DISTRICT

What's New?
Your bill, that's what's new. Due to new regulations designed to help protect your personal information, the district will now mail your bill in an envelope each month. This new billing system will also contain additional helpful account information as well as available payment options.

P.S.C. 1-800-772-4636

TOTAL AMOUNT DUE **$28.91**

PLEASE DETACH THIS PORTION AND RETURN WITH PAYMENT

10% PENALTY AFTER 25TH OF THE MONTH

CUSTOMER NAME	
SERVICE ADDRESS	
ACCOUNT NUMBER	
DUE DATE	03/25/2015
AMOUNT DUE	$28.91
AMOUNT AFTER DUE DATE	$31.80
AMOUNT PAID	

MasterCard VISA DISCOVER

MAKE CHECKS PAYABLE TO:

SOUTH ANDERSON WATER DISTRICT
PO BOX 17
LAWRENCEBURG KY 40342-0017

KENTUCKY
PUBLIC SERVICE COMMISSION
JEFF R. DEROUEN
EXECUTIVE DIRECTOR
TARIFF BRANCH
Bunt Kirtley
EFFECTIVE
3/20/2015
PURSUANT TO 807 KAR 5:011 SECTION 9 (1)

13/2

SOUTH ANDERSON WATER DISTRICT
SAWD
502-839-6919

Quality On Tap!

WE ARE NOT RESPONSIBLE FOR MAIL DELIVERY
Failure to receive a water bill does not relinquish your responsibility for payment or penalties. Please allow 5 business days for your payment to be received through regular mail. **A late charge will be added if payment is not received in the office by close of business on the due date.**

WATER METER AREA
Please be advised that the water meter itself is the property of South Anderson Water District and the valve in the meter pit should not be used as a shut-off valve. Also, the meter lid should not be removed unless it is an emergency and in the winter it can freeze very quickly when the lid is not securely closed. Periodically, our employees need to have access to the meter area at any given time, so please keep the area around the meter accessible. Be careful not to damage the electronic reading device (if equipped) which is housed in the meter box; damages to this device or other Utility property could result in charges for damages.

BE WATER WISE! A continuous leak from a hole the size illustrated in the chart, at 60 pounds per square inch water pressure over a three-month period, can waste thousands of gallons of valuable water.

Diameter of stream	Gallons
1/4"	1,181,500
3/16"	666,000
1/8"	296,000
1/16"	74,000

CHECK FOR LEAKS – Check all toilets and faucets. Leaky toilets and faucets are the greatest cause of water waste, resulting in large water bills.

EMERGENCIES
In the event you would have a water emergency, please call 502-839-6919 (Day or Night). Our normal office hours are Monday through Friday – 8:30 A.M. to 4:30 P.M. If you have an emergency with your Sewer call the City of Lawrenceburg 502-839-5372.

KENTUCKY 811 – CALL BEFORE YOU DIG!
Every digging project by law in the State of Kentucky requires a call to the KY811 Call Before You Dig Center. This simple call will get all Utility lines on your property marked; what you don't know can hurt you! Call 811 before you begin any digging project. It's fast, it's easy and it's the **LAW** in the State of Kentucky.

IF YOUR ACCOUNT HAS A DISCONNECT AMOUNT DUE, YOU ARE SCHEDULED TO BE DISCONNECTED.
The **DISCONNECT AMOUNT DUE** must be paid in full by the **DISCONNECT DUE DATE** to avoid your service from being disconnected. IT IS YOUR RESPONSIBILITY TO CONTACT OUR OFFICE **IMMEDIATELY** TO MAKE ACCEPTABLE PAYMENT ARRANGEMENTS IF YOU ARE UNABLE TO PAY THE **DISCONNECT AMOUNT DUE IN FULL** SHOWN ON YOUR ACCOUNT BY THE DISCONNECT DUE DATE. If your service is disconnected, payment in full is required to restore water service, including paying the disconnect/reconnect fee. If you have already paid the disconnect amount due shown on your account, please contact our office during normal business hours and speak with a Representative to confirm your payment has been received. *You cannot be assisted by our Answering Machine or Emergency Staff regarding your account payment status if you call before or after normal business hours.*

PAYMENT METHODS

Pay in Person – 24/7 Night Depository
Utility Office Location:
142 South Main Street
Lawrenceburg, KY 40342

BANK DRAFT
(Automatic Payment Withdrawal)
From your Checking or Savings

Credit Card payments are accepted 24/7, but ONLY ONLINE at our website
www.southandersonwater.com

MasterCard VISA DISCOVER NETWORK

Office Hours: Monday through Friday – 8:30 A.M to 4:30 P.M.
Closed for lunch 12:00 to 1:00

KENTUCKY
PUBLIC SERVICE COMMISSION
JEFF R. DEROUEN
EXECUTIVE DIRECTOR
TARIFF BRANCH
Bunt Kirtley
EFFECTIVE
3/20/2015
PURSUANT TO 807 KAR 5:011 SECTION 9 (1)

SOUTH ANDERSON WATER DISTRICT
WATER USER'S AGREEMENT

This agreement made and entered into this _____day of _____, 2015 between

_____

Whose address is_____
(Hereinafter called the "Applicant") and the South Anderson Water District, P.O. Box 17 Lawrenceburg, KY 40342 (hereinafter called the District.")

WHEREAS, the Applicant desires to purchase water for domestic, farm, and other purposes, from the District, and to enter into a Water User's Agreement as required by the Rules and Regulation of the District, and approved by the Public Service Commission.

1. **The Applicant will pay to the District the sum established as the tap/connect fee, $1,000.00. The District shall purchase and install a box, setter and water meter, for each service, provided the District has determined in advance that the District's water system is of sufficient capacity to permit delivery of water at that point. Such box, setter and meter shall be installed at a point selected by the District on the Applicant's property. The District shall have exclusive right to use such box, setter and meter to turn it on and off.**

2. **The District shall have jurisdiction in any question of location of any service connection to its distribution system; shall determine the allocation of water to Applicant in the event of a water shortage; and the District may shut off water to an Applicant who allows a connection or extension to be made to Applicant's service line for the purpose of supplying water to another user.**

3. **The Applicant will, when water becomes available, purchase from the District and shall pay for such water at such rates, time and place as shall be determined by the District and shall pay a minimum water bill each month whether any water is used or property occupied, so long as the meter is installed. The Applicant further agrees to pay such deposit required by the District under the provision of its approved tariff.**

4. **The Applicant will comply with and be bound by the provisions of the policy and/or amendments thereof of the District, and such rules, regulations as the District may from time to time adopt.**

5. **The Applicant shall install and maintain, at Applicant's expense, a service line, which shall begin at the meter location and extend to the dwelling and other portions of the premises.**

6. **The Applicant shall, and does hereby, grant to the District an easement across the land of the Applicant for the purpose of installation of a distribution system and meter box and the Applicant does further grant unto the District a general easement for ingress and egress over the property of the Applicant for the purpose of serving the lines and meters owned by the District.**

7. **The Applicant assumes responsibility for any damage to metering equipment during or after connection to the meter.**

8. **The failure of an Applicant to pay water charges duly imposed shall result in the automatic imposition of the following penalties:**

   A. **Non-payment of water charges by the due date will result in a penalty of ten (10) percent of the amount of the delinquent account.**
   B. **Non-payment within Five (5) days from the due date will result in the service disconnection procedures by the District under the provisions of its approved tariff.**
   C. **In the event of disconnection for non-payment the District will require a fee for re-connection of the service.**

_____ _____
APPLICANT **DISTRICT PERSONNEL**

The District offers the opportunity for all residents in the service area to become users of the facilities regardless of race, creed, color, religion, sex, national origin, marital status, physical or mental handicap or level of income."This institution is an equal opportunity provider, and employer."

INFORMATION FOR GOVERNMENT MONITORING PURPOSES

The Federal Government, acting through Rural Development, solicits the formation regarding race/national origin. You are not required to furnish this information, but are encouraged to do so. This information will not be used in evaluating your application or to discriminate against you in any way. If, however you choose not to furnish it, the District is required to note the race/national origin of individual applicant on the basis of visual observation or surname.

_____ I do not wish to furnish this information

RACE/NATIONAL ORIGIN

____ American Indian **_____Asian, Pacific Islander**

____ Black **____ Hispanic** **_____ White** **_____ Other _____**

KENTUCKY
PUBLIC SERVICE COMMISSION
JEFF R. DEROUEN
EXECUTIVE DIRECTOR
TARIFF BRANCH
Bunt Kirtley
EFFECTIVE
11/5/2015
PURSUANT TO 807 KAR 5:011 SECTION 9 (1)

South Anderson Water District
Connect Order

Make _____ Purchase Date _____

Meter Number _____ Size: _____ Sewer Yes ☐ No ☐

Est Years: _____ Master Meter Code: _____ EECO Codes; _____ Photo ID: _____

IT RON Number _____ Reading _____ Test _____

Account Number _____

Customer Name: _____

Road/Street _____

_____

City _____

State _____ Zip _____

New Service ❑ Establish Dwelling ❑ Plumbing Permit # _____

BILLING ADDRESS:

NAME: _____

STREET/ROAD: _____

CITY: _____

STATE: _____ ZIP _____

Deposit $ _____ Co~~mmnm~~nnection Date: _____

Sewer Deposit $ _____

Signature of Customer Requesting Service: _____ DATE _____

Telephone # _____ Cell: _____

Entered ❑ Date: _____

KENTUCKY
PUBLIC SERVICE COMMISSION
JEFF R. DEROUEN
EXECUTIVE DIRECTOR
TARIFF BRANCH
Bunt Kirtley
EFFECTIVE
11/5/2015
PURSUANT TO 807 KAR 5:011 SECTION 9 (1)