RECEIVED
DEC 29 2009
PUBLIC SERVICE COMMISSION

COMMONWEALTH OF KENTUCKY

BEFORE THE PUBLIC SERVICE COMMISSION

In the Matter of:

THE APPLICATION FOR GENERAL ADJUSTMENT OF ELECTRIC RATES OF KENTUCKY POWER COMPANY	) CASE NO. 2009-00459

* * * * * * * *

MOTION FOR CONFIDENTIAL TREATMENT

Kentucky Power Company ("Kentucky Power" or "the Company"), moves the Commission pursuant to pursuant to KRS 61.878(1)(c)(1) and 804 KAR 5:001, Section 7, for an Order granting confidential treatment to certain exhibits filed in connection with the testimony of Scott C. Weaver and Jay. F. Godfrey. In support of its Motion for Confidential Treatment Kentucky Power states:

1. The information for which confidential treatment is being sought ("Confidential Information") is:

(a) The redacted portions of Exhibit JFG-1 (Term sheet for 20-year, 100 MW Renewable Energy Purchase Agreement ("REPA") between Kentucky Power and FPL Wind Illinois, LLC ("FPL Wind")) filed with the testimony of Jay F. Godfrey.

(b) The redacted portions of Exhibit JFG-2 (REPA) filed with the testimony of Jay F. Godfrey.

(c) The redacted portions of Exhibit JFG-3 (A comparison of the qualified bids received in response to the Request for Proposals that resulted in the REPA) filed with the testimony of Jay F. Godfrey.

(d) Exhibit SCW-3 (Relative change in annual revenue requirement / project cost comparison due to the REPA) filed with the testimony of Scott C. Weaver.

2. Pursuant to 807 KAR 5:001, Section, 7, an original of the exhibits for which confidential treatment is sought is filed under seal with this motion. In addition, ten redacted copies of the exhibits are filed with this motion.

Statutory Standard

4. KRS 61.878(1)(c)(1) excludes from the public disclosure requirements of the Open Records Act:

> "[r]ecords confidentially disclosed to an agency or required by an agency to be disclosed to it, generally recognized as confidential or proprietary, which if openly disclosed would present an unfair commercial advantage to competitors of the entity that disclosed the records.

The Confidential Information satisfies this exception.

The Information Is Generally Recognized As Confidential And Proprietary

5. As Messrs. DiDonato, Godfrey and Weaver testify in their affidavits, the Confidential Information is generally considered confidential and proprietary.[1] Affidavit of John DiDonato at ¶ 4, 6 ("DiDonato Affidavit"); Affidavit of Jay F. Godfrey at ¶ 5 ("Godfrey Affidavit"); Affidavit of Scott C. Weaver at ¶ 5 ("Weaver Affidavit"). The Confidential Information is not available to or ascertainable by, persons outside the companies by proper means other than on a confidential basis. DiDonato Affidavit at ¶ 6; Godfrey Affidavit at ¶11; Weaver Affidavit at ¶ 11. Indeed, the Confidential Information derives economic value from the fact it is not generally known to persons who can obtain value from its disclosure. DiDonato Affidavit at ¶ 5; Godfrey Affidavit at ¶11; Weaver Affidavit at ¶ 11.

6. In light of the confidential and proprietary nature of the information, FPL Wind, American Electric Power Service Corporation ("AEPSC"), and Kentucky Power take all reasonable efforts to protect it from public disclosure. DiDonato Affidavit at ¶ 7; Godfrey Affidavit at 12; Weaver Affidavit at ¶ 12. Among the measures taken are limiting access to the information within the companies to only those persons with a legitimate need to access the information, protecting against disclosure outside the Company, and entering into confidentiality agreements to protect against disclosure by persons outside the Companies who are afforded access for legitimate purposes. DiDonato Affidavit at ¶ 5, 7; Godfrey Affidavit at 12-13; Weaver Affidavit at ¶ 12-13.

Disclosure Of The Confidential Information Will Result in An
Unfair Competitive Advantage To The Competitors Of Kentucky Power and FPL Wind

7. The Confidential Information, if disclosed to competitors of FPL Wind or Kentucky Power, or otherwise made publicly available, would provide an unfair competitive advantage to competitors of FPL Wind and Kentucky Power. The Confidential Information therefore is entitled to protection from disclosure by the Commission. Specifically, the public disclosure of the Confidential Information would:

(a) Be detrimental to Kentucky Power's ability to obtain competitive responses to future RFPs, thereby preventing Kentucky Power from obtaining the lowest reasonable cost. Godfrey Affidavit at ¶ 10; Weaver Affidavit at ¶ 10. FPL Wind submitted its response to the RFP based upon the understanding the information would not be publicly disclosed. DiDonato Affidavit at ¶ 7. Disclosure of the Confidential Information would discourage bidders from submitting bids out of concern the confidential information would be

[1] *See, also, Verified Petition of Indiana Michigan Power Company, An Indiana Corporation, For Approval Pursuant To Ind. Code 8-1-2-42(a), 8-1-8.8-11 And To the Extent Necessary 8-1-2.5-6 Of A Renewable Energy Purchase Agreement With Fowler Ridge II Wind Farm, LLC, Including Time Cost*

made public because Kentucky Power is not permitted to abide by confidentiality agreements. Godfrey Affidavit at ¶ 10; Weaver Affidavit at ¶ 10.

(b) Establish certain benchmarks in future negotiations, thereby potentially increasing costs incurred by customers of KPCo and its affiliates. Godfrey Affidavit at ¶ 10; Weaver Affidavit at ¶ 10.

(c) Permit other purchasers to benefit from Kentucky Power's efforts in negotiating the REPA and "cherry-pick" the most advantageous contracts and terms to Kentucky Power's competitive disadvantage. Godfrey Affidavit at ¶ 10; Weaver Affidavit at ¶ 10.

(d) Adversely affect FPL Wind's ability to negotiate future renewable energy power agreements. DiDonato Affidavit at ¶ 5.

8. The renewable energy market is extremely competitive. Information such as contract section headings, which can indicate a purchaser or seller's willingness to enter into a particular type of provision, could affect the bargaining between potential sellers and purchasers, and provide competitors of Kentucky Power and FPL Wind with an unfair competitive advantage even if the specific terms of the section are not disclosed.

9. In implicit recognition of this potential harm, similarly redacted versions of renewable energy purchase agreements were granted confidential treatment in other jurisdictions. Kentucky Power recognizes that the Commission is required to apply KRS 61.878 and not the law of other jurisdictions. However, the Company offers examples from other states to illustrate administrative agency recognition that headings and similar contract provisions constitute confidential and proprietary information, and that their disclosure can cause competitive harm. For example, the Indiana Utility Regulatory Commission issued an Order in the *Verified Petition*

Recovery (Ind. P.U.C. September 1, 2009) (exempting from disclosure under Indiana law of a similarly redacted version of a renewable energy purchase agreement on the ground it was a trade secret.)

of Indiana Michigan Power Company, An Indiana Corporation, For Approval Pursuant To Ind. Code 8-1-2-42(a), 8-1-8.8-11 And To the Extent Necessary 8-1-2.5-6 Of A Renewable Energy Purchase Agreement With Fowler Ridge II Wind Farm, LLC, Including Time Cost Recovery Case No. 43750 (Ind. P.U.C. September 1, 2009). The West Virginia Commission has repeatedly ordered confidential protection of similar terms and conditions (*Joint Petition for consent and approval of wind power purchase agreements between Appalachian Power Company and Wheeling Power Company, dba American Electric Power and Grand Ridge Energy I1 LLC and Grand Ridge Energy I11 LLC.* Case No. 09-0305-E-PC (PSC of West Virginia, April 29, 2009); *Joint petition for consent and approval of a wind power purchase agreement between Appalachian Power Company and Wheeling Power Company, dba American Electric Power and Beech Ridge Energy LLC and a joint motion for non-disclosure and protective order of certain exhibits with the filing*, Case No. 08- 1600-E-PC (PSC of West Virginia, December 11, 2008) and *Petition for consent and approval of the purchase of power produced by a renewable wind energy resource and for an Assurance of Rate Recovery,* Case No. 07- 173 1 -E-PC (PSC of West Virginia, December 4, 2007.). In Virginia, the State Corporation Commission also afforded confidential treatment to the terms and conditions of a similar Wind purchase power agreement (*For Approval Pursuant To Section 56-585.2 Of The Virginia Code Of Purchase Power Agreements As Part Of Its Participation In The Virginia Renewable Energy Portfolio Standard Program,* Case No. 2009-00102 (Virginia S.C.C. October 14, 2009).

Respectfully submitted,

Mark R. Overstreet
STITES & HARBISON PLLC
421 West Main Street
P.O. Box 634
Frankfort, Kentucky 40602-0634
Telephone: (502) 223-3477

COUNSEL FOR:
KENTUCKY POWER COMPANY

CERTIFICATE OF SERVICE

I hereby certify that a copy of the foregoing was served by first class mail, postage prepaid, upon the following parties, this 29th day of December, 2009.

Dennis G. Howard, II
Office of Attorney General
Division of Rate Intervention
1024 Capital Center Drive
P.O. Box 2000
Frankfort, Kentucky 40602-2000

Michael L. Kurtz
Boehm, Kurtz & Lowry
2110 CBLD Center
36 East Seventh Street
Cincinnati, OH 45202

Mark R. Overstreet

EXHIBIT A

AFFIDAVIT OF JAY F. GODFREY

Jay F. Godfrey, first being duly sworn, states:

1. I am of the age of majority and competent to make this affidavit. I have personal knowledge of the matters set forth in this affidavit.

2 I am employed by American Electric Power Service Corporation (AEPSC), a wholly owned subsidiary of American Electric Power Company, Inc. (AEP). AEP is the parent company of Kentucky Power Company (KPCo). I am employed as a Managing Director - Renewable Energy. In that capacity, I am responsible for managing AEP's and its subsidiaries' portfolio of Renewable Energy Purchase Agreements (REPAs) and related long-term structured emission reduction offset agreements. This includes AEP's wind related power off-take agreements, as well as potential new wind project development. I am familiar with the terms and other confidential information relating to the renewable wind energy Power Purchase Agreement ("Wind PPA") with FPL Energy Illinois Wind, LLC ("FPLEWIC") which KPCo seeks to protect from public disclosure. FPLEWIC is an indirectly subsidiary of NextEra Energy Resources, LLC.

3 I have specific personal knowledge of the confidential, proprietary, competitively sensitive and trade secret nature of the confidential information addressed in this Affidavit through direct contact with this information and through my investigation with other AEPSC and KPCo employees who work directly with the confidential information. I have personal knowledge of efforts taken by KPCo and AEPSC to maintain the secrecy of the confidential information through direct involvement in these efforts, and through my investigation of these efforts with other employees who work

directly with these procedures. Finally, I have personal knowledge through my investigation, along with other AEPSC and KPCo employees who work directly with the confidential information, of the effect the public disclosure of the confidential information would have on KPCo's competitive efforts in securing such contracts.

Description of the Confidential Information for Which Protection is Sought

4. KPCO is requesting that certain information contained in Wind PPA and other confidential information referred to in KPCo's written testimony and included in exhibits in this Cause be protected from public disclosure pursuant to KRS 61.878(1)(c)(1) (the "Confidential Information").

5. More specifically, the Confidential Information includes the price per MWh and certain other negotiated commercial terms of the Wind PPA that are confidential, proprietary, competitively sensitive and a trade secret. These exhibits have been identified as Exhibit JFG-1 and Exhibit JFG-2, respectively. In addition, all of the information on Exhibit JFG-3 has been marked confidential because it lists a comparison of the qualified bids received in response to the 2009 Renewable RFP.

Public Disclosure Of The Information For Which Confidential Treatment Is Sought Would Permit An Unfair Commercial Advantage To Kentucky Power's Competitors

6. As evidenced in my testimony and that of Mr. Weaver, the market for renewable energy purchase power agreements is extremely competitive. There are multiple sellers of renewable energy seeking the highest prices for their capacity and energy. Likewise, with the advent of renewable portfolio standards in many states. Kentucky Power and its affiliates face strong and growing competition for the most

advantageous agreements. The price and other financial terms of such agreements typically are the terms most vigorously negotiated by suppliers and purchasers.

7. KPCo and its affiliates may negotiate similar contracts with other suppliers in the future. If the prices and terms included in the Wind PPA and related cost analysis (JFG-1, JFG-2 and JFG-3) became publicly known or available, parties with which KPCo and its affiliates may negotiate could use this knowledge to the detriment of KPCo, its customers, and affiliates. Knowledge of these terms by other potential suppliers would establish certain benchmarks in future negotiations, thereby potentially increasing costs incurred by customers of KPCo and its affiliates. In other words, other suppliers would insist on the same or better terms as those negotiated in this purchase agreement. Furthermore, knowledge of the provisions by potential power supply competitors could enable them to gain an unfair advantage in future competitive situations. Finally, the Confidential Information also could be used by other purchasers competing for such contracts to "cherry-pick" the most favorable contracts, thereby depriving Kentucky Power of the ability to obtain the most advantageous prices for its customers. In sum, the public disclosure of the information for which confidential treatment is sought will result in KPCo and FPLEWIC's competitors gaining an unfair commercial advantage.

8. In negotiating renewable energy purchase power agreements, AEPSC and KPCo seek to obtain the lowest reasonable cost for the Company's customers. Suppliers, on the other hand, are interested in obtaining the highest price possible for their commodity. Making the company's analysis with regards to renewable energy acquisition or other competitively sensitive information available to the suppliers with

which the Company is negotiating compromises the ability of AEPSC and KPCo to obtain the lowest reasonable cost for customers.

9. JFG-3 contains pricing submitted by FPLEWIC and other suppliers submitting responses to the Request for Proposals. These other suppliers were not awarded a REPA with Kentucky Power, and their pricing and other Confidential Information is relevant to this proceeding to the limited extent of showing the reasonableness of the FPLEWIC and KPCo agreement.

10. The public disclosure of the Confidential Information, including that included in JFG-1, JFG-2 and JFG-3, will impede the ability of KPCo and AEPSC to obtain the lowest reasonable cost for KPCO's customers by discouraging bidders from submitting bids because of concern that confidential terms will become public knowledge. As such, the public dissemination of the confidential information will provide an unfair economic advantage to KPCo's competitors.

The Information is Not Generally Known, Readily Ascertainable by Proper Means by Other Persons Who Can Obtain Economic Value from its Disclosure or Use

11. The Confidential Information is not available or ascertainable by other parties through normal or proper means. No reasonable amount of independent research could yield this information to other parties.

The Information is the Subject of Efforts Reasonable Under The Circumstances to Maintain Its Secrecy

12. The Confidential Information has been the subject of efforts that are reasonable under the circumstances to maintain its secrecy. KPCo and AEPSC limit public access to buildings housing the Confidential Information by use of security

guards. Persons not employed by KPCo and AEPSC who are allowed past security guards at buildings where Confidential Information is kept are not permitted to walk within such buildings without an escort. KPCo's and AEPSC's files containing the Confidential Information are maintained separately from KPCo's and AEPSC's general records and access to those files is restricted. Within KPCo and AEPSC, access to this information has been and will continue to be disclosed only to those employees, officers and representatives of KPCo and AEPSC who have a need to know about such information due to their job and management responsibilities. Outside KPCo and AEPSC, this information is only provided to certain persons who have a legitimate need to review the information to participate in this Cause and who sign a confidentiality agreement.

13. In connection with the solicitation of responses to the Request for Proposals described in my testimony, AEPSC on behalf of itself and its affiliates, entered into confidentiality agreements with each party submitting a response. Such agreements are customary in the industry, and are a necessary prerequisite to AEPSC and KPCo being able to solicit the widest possible response to the request for proposal. Under the confidentiality agreements, AEPSC on behalf of itself and its affiliates including KPCo, agreed to restrict the access of information to only those employees, officers and representatives of KPCo and AEPSC who have a need to know about such information due to their job and management responsibilities. NextEra Energy Resources, LLC, the indirect parent of FPLEWIC, and AEPSC entered into such a confidentiality agreement with respect to pricing and Other Confidential Information contained in my testimony and the exhibits thereto.

14. Further the Affiant sayeth nothing more.

Dated: 12/21/09

Jay F. Godfrey

STATE OF OHIO)
) SS:
COUNTY OF FRANKLIN)

Subscribed and sworn to before me, a Notary Public, in and for said County and State this 21st day of December 2009.

Notary Public

I am a resident of Franklin County, Ohio

My commission expires: January 4, 2014

DONNA J. STEPHENS
Notary Public, State of Ohio
My Commission Expires 01-04-2014

EXHIBIT B

AFFIDAVIT

Scott C. Weaver, first being duly sworn, states:

1. I am of the age of majority and competent to make this affidavit. I have personal knowledge of the matters set forth in this affidavit.

2. I am Managing Director-Resource Planning and Operational Analysis of the American Electric Power Service Corporation (AEPSC), AEP is the parent company of Kentucky Power Company (KPCo). I am familiar with the content of KPCo's filings in this case and the need to protect certain confidential and proprietary information attached to my pre-filed direct testimony. I am aware of the confidential pricing information relating to the renewable wind energy Power Purchase Agreement ("Wind PPA") with FPL Energy Illinois Wind, LLC ("FPLEWIC") which KPCo seeks to protect from public disclosure. FPLEWIC is an indirectly subsidiary of NextEra Energy Resources, LLC.

3. I have specific personal knowledge of the confidential, proprietary, competitively sensitive and trade secret nature of the confidential information addressed in this Affidavit, including the Renewable Energy Credits ("RECs") and current projections regarding their cost. I gained this knowledge through direct contact with this information and through my investigation with other AEPSC and KPCO employees who work directly with the confidential information. I have personal knowledge of efforts taken by KPCo and AEPSC to maintain the secrecy of the confidential information through direct contact with these efforts and through my investigation of these efforts with other employees who work directly with these procedures. Finally, I have personal knowledge of through my investigation, along with other AEPSC and KPCo employees

who work directly with the confidential information, of the effect the public disclosure of the confidential information would have on KPCo's competitive efforts in securing such contracts.

Description of the Confidential Information for Which Protection is Sought

4. KPCO is requesting that certain information related to the Company's Wind PPA and other confidential information to be referred to in KPCO's written testimony and included in exhibits in this Cause to be protected from public disclosure pursuant to KRS 61.878(1)(c)(1) (the "Confidential Information").

5. More specifically, the Confidential Information, including SCW-3, includes the price per MWh to be paid under the agreement, KPCo's estimated cost of RECs, and other negotiated commercial terms of the Wind PPA that are confidential, proprietary, competitively sensitive and trade secrets. Other sections of SCW-3 have been marked confidential because they will permit a reader to determine the cost data associated with the Wind PPA by comparing the different columns.

Public Disclosure Of The Information For Which Confidential Treatment Is Sought Would Permit An Unfair Commercial Advantage To Kentucky Power's Competitors

6. As evidenced in my testimony and that of Mr. Godfrey, the market for renewable energy purchase power agreements is extremely competitive. There are multiple sellers of renewable energy seeking the highest prices for their capacity and energy. Likewise, with the advent of renewable portfolio standards in many states, Kentucky Power and its affiliates face strong and growing competition for the most advantageous agreements. The price and other financial terms of such agreements typically are the terms most vigorously negotiated by suppliers and purchasers.

EXHIBIT B

7. KPCo and its affiliates may negotiate similar contracts with other suppliers in the future. If the price included in the Wind PPA became publicly known or available, parties with which KPCo and its affiliates may negotiate could use this knowledge to the detriment of KPCo, its customers, and affiliates. Knowledge of these terms by other potential suppliers would establish certain benchmarks in future negotiations, thereby potentially increasing costs incurred by customers of KPCo and its affiliates. In other words, other suppliers would insist on the same or better terms as those negotiated in this purchase agreement. Furthermore, knowledge of the provisions by potential power supply competitors could enable them to gain an unfair advantage in future competitive situations. Finally, the Confidential Information also could be used by other purchasers competing for such contracts to "cherry-pick" the most favorable contracts, thereby depriving Kentucky Power of the ability to obtain the most advantageous prices for its customers. In sum, the public disclosure of the information for which confidential treatment is sought will result in KPCo and FPLEWIC's competitors gaining an unfair commercial advantage.

8. In negotiating renewable energy purchase power agreements, AEPSC and KPCo seek to obtain the lowest reasonable cost for the Company's customers. Suppliers, on the other hand, are interested in obtaining the highest price possible for their commodity. Making the company's analysis with regards to renewable energy acquisition or other competitively sensitive information available to the suppliers with which the Company is negotiating compromises the ability of AEPSC and KPCo to obtain the lowest reasonable cost for customers. .

9. RECs are tradable, non-tangible energy commodities in the United States that represent proof that 1 MWh of electricity was generated from an eligible renewable energy

resource. The trading of RECs is not price-regulated and is subject to substantial competition. As more states impose Renewable Portfolio Standards, the price competition with respect to RECs is expected to intensify.

10. The public disclosure of the Confidential Information, including that included in SCW-3, will impede the ability of KPCo and AEPSC to obtain the lowest reasonable cost for KPCO's customers by discouraging bidders from submitting bids because of concern that confidential terms will become public knowledge. It also will affect the ability of Kentucky Power to obtain the most advantageous price for RECs it buys and sells in public markets. As such, the public dissemination of the Confidential Information will provide an unfair economic advantage to KPCo's competitors.

The Information is Not Generally Known, Readily Ascertainable by Proper Means by Other Persons Who Can Obtain Economic Value from its Disclosure or Use

11. The Confidential Information is not available or ascertainable by other parties through normal or proper means. No reasonable amount of independent research could yield this information to other parties.

The Information is the Subject of Efforts Reasonable Under The Circumstances to Maintain Its Secrecy

12. The Confidential Information has been the subject of efforts that are reasonable under the circumstances to maintain its secrecy. KPCo and AEPSC limit public access to buildings housing the Confidential Information by use of security guards. Persons not employed by KPCo and AEPSC who are allowed past security guards at buildings where Confidential Information is kept are not permitted to walk within such buildings without an escort. KPCo's and AEPSC's files containing the Confidential Information are maintained separately from

EXHIBIT B

KPCo's and AEPSC's general records and access to those files is restricted. Within KPCo and AEPSC, access to this information has been and will continue to be disclosed only to those employees, officers and representatives of KPCo and AEPSC who have a need to know about such information due to their job and management responsibilities. Outside KPCo and AEPSC, this information is only provided to certain persons who have a legitimate need to review the information to participate in this Cause and who sign a confidentiality agreement.

13. In connection with the solicitation of responses to the Request for Proposals described in my testimony, AEPSC on behalf of itself and its affiliates, entered into confidentiality agreements with each party submitting a response. Such agreements are customary in the industry, and are a necessary prerequisite to AEPSC and KPCo being able to solicit the widest possible response to the request for proposal. Under the confidentiality agreements, AEPSC on behalf of itself and its affiliates including KPCo, agreed to restrict the access of information to only those employees, officers and representatives of KPCo and AEPSC who have a need to know about such information due to their job and management responsibilities. NextEra Energy Resources, LLC, the indirect parent of FPLEWIC, and AEPSC entered into such a confidentiality agreement with respect to pricing and Other Confidential Information contained in my testimony and the exhibits thereto.

14. Further the Affiant sayeth nothing more.

Scott C. Weaver
Managing Director-Resource Planning
and Operational Analysis
American Electric Power Service Corporation

EXHIBIT B

STATE OF OHIO)
) SS:
COUNTY OF FRANKLIN)

Subscribed and sworn to before me, a Notary Public in and for said County and State this 31st day of December 2009.

Sharon Hutchens
Notary Public-State of Ohio
My Commission Expires
November 17, 2014

Sharon Hutchens
Notary Public

I am a resident of Licking County, Ohio

Affidavit
of
John DiDonato

John DiDonato, first being duly sworn, states:

1. I am of the age of majority and competent to make this affidavit. I have personal knowledge of the matters set forth in this affidavit.
2. I am Vice President of FPL Energy Illinois Wind, LLC (FPLEWIC), also known as the Lee-DeKalb Wind Energy Center (LDWEC). FPLEWIC is a wholly owned subsidiary of NextEra Energy Resources, LLC. I have personal knowledge of the operation of these companies, relative to practices concerning confidential information.
3. This affidavit is being filed with the Kentucky Public Service Commission (KPSC) in support of a Motion for a Protective Order filed by Kentucky Power Company (KPCo) filed concurrently with its application for general adjustment of electric rates and for approval of a renewable wind energy purchased power agreement (the Wind PPA) with FPLEWIC.

Description of the Confidential Information for Which Protection is Sought

4. I understand that KPCO is requesting that certain information contained in the Wind PPA in this case be treated as confidential, proprietary, competitively sensitive, and trade secret information. This information includes the price per MWh in the Wind PPA and certain other proprietary terms of the Wind PPA which constitutes competitively sensitive information (the Confidential Information).

The Information Contained in Confidential Information Derives Independent Economic Value by Reason of the Fact that it is not Publicly Available

5. Public disclosure of the Confidential Information could harm FPLEWIC. The Wind PPA was the product of arms-length, confidential negotiations, and the Confidential Information constitutes competitively sensitive information. For FPLEWIC and LDWEC, the public disclosure of the Confidential Information could result in a competitive disadvantage with respect to other potential purchased power buyers for this project or other projects that FPLEWIC or LDWEC are developing, and put FPLEWIC and LDWEC at a competitive disadvantage in future transactions. The Confidential Information derives actual or potential economic value from not being generally known to other persons who can obtain economic value from its disclosure or use and, to my knowledge, such information is not readily ascertainable on a non-confidential basis by third parties by proper means. The public disclosure of the Confidential Information will affect the ability of FPLEWIC and LDWEC to participate in similar RFPs involving Kentucky Power.

The Confidential Information is Not Generally Known, Readily Ascertainable by Proper Means by Other Persons Who Can Obtain Economic Value from its Disclosure or Use

6. To my knowledge, the Confidential Information is not available or ascertainable on a non-confidential basis by other parties through normal or proper means.

The Confidential Information is the Subject of Efforts Reasonable Under the Circumstances to Maintain Its Secrecy

7. FPLEWIC and LDWEC submitted the Confidential Information based upon the understanding that the Confidential Information will not be publicly disclosed, and that AEPSC and affiliated companies will take all necessary to protect against its public disclosure. The Confidential Information has been the subject of efforts that are reasonable under the circumstances to maintain its secrecy. A confidentiality agreement has been signed between AEPSC, on behalf of KPCO, and the indirect parent company NextEra Energy Resources LLC, on behalf of FPLEWIC/LDWEC, to restrict the access of information to only those employees, officers and representatives of KPCO, FPLEWIC and their respective affiliated companies who have a need to know about such information due to their job and management responsibilities. FPLEWIC's and LDWEC's files containing the Confidential Information are maintained separately from FPLEWIC's and LDWEC's general records and access to those files is restricted. Within FPLEWIC and LDWEC, access to the Confidential Information has been and will continue to be disclosed only to those employees, officers and representatives of FPLEWIC and LDWEC and their respective affiliated companies who have a need to know about such information due to their job and management responsibilities. Outside these companies, this information is only provided to certain persons who have a legitimate need to review the information to participate in this case and who sign a confidentiality agreement.

8. Further the Affiant sayeth nothing more.

Dated: 12/21/09

John DiDonato
Vice President

State of Florida)
)ss
County of Palm Beach)

Subscribed and sworn to before me, a Notary Public, in and for said County and State this 21st day of December 2009.

Nancy Schilling
Notary Public

I am a resident of Palm Beach County, Florida.
My Commission expires: May 31, 2010

NANCY SCHILLING
Notary Public - State of Florida
My Commission Expires May 31, 2010
Commission # DD 721624
Bonded Through National Notary Assn.

EXHIBIT JFG-1

KENTUCKY POWER COMPANY
RENEWABLE ENERGY
PURCHASE AGREEMENT ("REPA")
WITH
FPL ENERGY ILLINOIS WIND, LLC

SUMMARY TERM SHEET

Kentucky Power Company entered into an agreement (REPA) with FPL Energy Illinois Wind for an aggregate nameplate output of 100 MW from the first 217.5 MW phase of its Lee-DeKalb Wind Energy Center being constructed in Lee and DeKalb counties, Illinois. The terms, conditions and pricing provisions of the REPA are summarized below.

This Summary Term Sheet is qualified in its entirety by reference to, and in no way alters, the actual terms and conditions of the REPA. Except as otherwise indicated by the context, capitalized terms used in this Summary Term Sheet have the meanings set forth in the REPA.

- Seller. FPL Energy Illinois Wind, LLC.

- Purchaser: Kentucky Power Company.

- Term. 20 years from the Contract Start Date ("CSD").

- Price. Purchaser will pay Seller the Contract Rate set forth in Exhibit A attached hereto for each MWh of Renewable Energy delivered under the REPA for the calendar years 2010 and 2011. These prices will then increase at 2.25% per year in 2012 and thereafter. Purchaser will also reimburse Seller for any operating reserve or other PJM charges associated with scheduling the Renewable Energy to Purchaser via PJM's eSchedule process.

- Contract Start Date. The REPA will be effective upon the receipt of a final, non-appealable order from the Commission approving the terms and conditions of the REPA and authorizing Purchaser to recover all of the jurisdictional costs associated with the REPA through Kentucky Power Company Base Rates.

- Delay Damages. Customary for transactions of this type.

- Termination Right of Seller before CSD. If Purchaser is unable to obtain by September 15, 2010 a final, non-appealable order from the Commission approving the terms and conditions of the REPA and authorizing Purchaser to recover all of the jurisdictional costs associated with the REPA through Kentucky Power Company Base Rates, Seller may, by notice to the Purchaser delivered no later than September 30, 2009, terminate the REPA.

- Termination Right of Purchaser before CSD. If Purchaser is unable to obtain by September 15, 2010 a final, non-appealable order from the Commission

approving the terms and conditions of the REPA and authorizing Purchaser to recover all of the jurisdictional costs associated with the REPA through Kentucky Power Company Base Rates, Purchaser may, by notice to Seller on or prior to September 30, 2010, terminate the REPA.

- Representations and Warranties. Customary for transactions of this type.

- Sale and Purchase of Renewable Energy Products. During the Term of the REPA, Seller will generate, deliver and sell to Purchaser, Purchaser's Contract Capacity Share (100 MW) from the Lee DeKalb Wind Energy Center ("Purchaser's Share") of all Renewable Energy generated by the Facility, together with all associated Capacity, Beneficial Environmental Interests and Ancillary Services (collectively, "Renewable Energy Products").

- Purchaser's Right to Curtail Renewable Energy. Purchaser has the right from time to time to invoke an Economic Curtailment or, upon receipt of notice thereof, a Reliability Curtailment that is directed by the Transmission Operator or Interconnection Provider. In case of Economic Curtailment, Purchaser must provide Seller with notice of the curtailment and Purchaser's Share of Renewable Energy will be reduced to zero (0). In case of Reliability Curtailment, Purchaser must provide Seller with notice of the curtailment and the amount of Renewable Energy, if any, that may continue to be delivered to Purchaser during such Reliability Curtailment.

- Compensation for Curtailments. Purchaser is required to compensate Seller for any periods of Economic Curtailment, based on the amount of energy that Seller would have delivered given the prevailing wind conditions and other factors during the curtailment period. No compensation is owed during periods of Reliability Curtailment.

- Operation. Seller will operate the Facility consistent with Good Utility Practices, including compliance with permits and laws, and the Contract Administration Procedures developed with Purchaser.

- Delivery. Seller is responsible for all costs required to deliver Purchaser's Share of Renewable Energy from the Facility to the Point of Delivery. Purchaser is responsible for all costs required to receive Purchaser's Share of Renewable Energy at the Point of Delivery and deliver such energy to points beyond the Point of Delivery.

- Scheduling Arrangements. Seller is responsible for all scheduling of the Renewable Energy via PJM's eSchedule system. Purchaser is responsible for (1) all costs related to delivery of Purchaser's Share of Renewable Energy at and from the Point of Delivery and (2) for all scheduling, imbalance and congestion costs that are associated with Purchaser's Share, excluding any such costs arising from the failure by Seller to curtail deliveries in connection with a Reliability

Curtailment or Economic Curtailment. Seller is responsible (1) for all costs related to delivery of the Renewable Energy to the Point of Delivery and (2) for all scheduling, imbalance, congestion or other costs incurred by Purchaser as a result of the failure by Seller to curtail deliveries in connection with a Reliability Curtailment or Economic Curtailment.

- Beneficial Environmental Interest Certification. Seller is responsible for subscribing to and providing reports to the Generation Attribute Tracking System (GATS) and delivering GATS Certificates associated with the Renewable Energy delivered to Purchaser.

- Interconnection Facilities. Seller has entered into a separate and free-standing Interconnection Agreement with the Interconnection Provider and is responsible for constructing, operating and maintaining all interconnection facilities thereunder.

- Meters. Customary for transactions of this type.

- Taxes and Tax Credits. Seller is solely responsible for all taxes relating to the Facility, and for taxes incurred by reason of the sale and delivery of Renewable Energy to Purchaser at the Point of Delivery. Purchaser is responsible for all taxes relating to the Renewable Energy Credits, and for taxes associated with the Renewable Energy upon and after receipt at the Point of Delivery. Seller will receive all tax credits from the ownership and operation of the Facility.

- Events of Default of Seller. Customary for transactions of this type.

- Events of Default of Purchaser. Customary for transactions of this type.

- Remedies for Default. Customary for transactions of this type including a termination right in the event a Default remains uncured beyond the applicable period(s).

- Seller Security Fund. Seller will provide a Security Fund as credit support for damages due upon Seller's failure to achieve COD by the Commercial Operation Milestone, damages due upon Seller's failure to maintain the Guaranteed Availability during an applicable period, or damages resulting from a Seller Event of Default.

- Damages Payable in the Event of Termination. Customary for transactions of this type.

- Indemnification. Customary for transactions of this type.

- Fines. Customary for transactions of this type.

- Limitation of Liability, Remedies, and Damages. Customary for transactions of this type.
- Assignment. Customary for transactions of this type.
- Confidentiality. Customary for transactions of this type.
- Governing Law/Venue. The interpretation and performance of the REPA is governed under the laws of the State of New York.
- Dispute Resolution. Customary for transactions of this type.

EXHIBIT A

ADDITIONAL TERMS

[redacted]

PRICING

CONTRACT RATE
($ Per MWh)

Premium Peak	$[redacted] / MWh*	Weekdays: Jan/Feb/Jul/Aug/Dec
Peak	$[redacted] / MWh*	Weekdays: Mar/Apr/May/Jun/Sep/Oct/Nov
Off-Peak	$[redacted] / MWh*	Nights, Weekends & NERC Holidays: Jan - Dec

* Above prices escalates at 2.25% per year beginning 1/1/2012

EXHIBIT JFG-2

RENEWABLE ENERGY PURCHASE AGREEMENT
FOR
WIND ENERGY RESOURCES

BETWEEN

FPL ENERGY ILLINOIS WIND, LLC

AND

KENTUCKY POWER COMPANY

DECEMBER 21, 2009

TABLE OF CONTENTS

		Page
ARTICLE 1	DEFINITIONS AND RULES OF INTERPRETATION	1
1.1	RULES OF CONSTRUCTION	1
1.2	INTERPRETATION WITH INTERCONNECTION AGREEMENT	2
1.3	INTERPRETATION OF ARRANGEMENTS FOR ELECTRIC SUPPLY TO THE FACILITY	3
1.4	DEFINITIONS	3
ARTICLE 2	TERM AND TERMINATION	16
ARTICLE 3	FACILITY DESCRIPTION	16
3.1	SUMMARY DESCRIPTION	16
3.2	LOCATION	17
3.3	GENERAL DESIGN OF THE FACILITY	17
ARTICLE 4	COMMERCIAL OPERATION	17
4.1	COMMERCIAL OPERATION	17
4.2	[INTENTIONALLY DELETED]	18
4.3	SITE REPORT	18
4.4	[INTENTIONALLY DELETED]	18
4.5	PROGRESS REPORTS	18
4.6	PURCHASER'S RIGHTS DURING CONSTRUCTION	18
4.7	COMMERCIAL OPERATION MILESTONES	19
4.8	[INTENTIONALLY DELETED]	20
4.9	QF WAIVER	20
ARTICLE 5	DELIVERY AND METERING	20
5.1	SELLER'S AND PURCHASER'S OBLIGATIONS	20
5.2	REQUIRED OPERATION	21
5.3	DELIVERY ARRANGEMENTS	21
5.4	ELECTRIC METERING DEVICES	21
5.5	ADJUSTMENT FOR INACCURATE METERS	22
5.6	SCHEDULING ARRANGEMENTS	23
ARTICLE 6	CONDITIONS PRECEDENT	25
6.1	PURCHASER CONDITION PRECEDENT	25
6.2	SELLER CONDITION PRECEDENT	25
ARTICLE 7	SALE AND PURCHASE OF RENEWABLE ENERGY	26
7.1	SALE AND PURCHASE	26

TABLE OF CONTENTS
(continued)

Page

7.2 [redacted] 26
7.3 TITLE AND RISK OF LOSS 27
7.4 CURTAILMENTS 27
7.5 REDUCTIONS FOR CURTAILMENTS 28
7.6 TAX BENEFITS 29

ARTICLE 8 PAYMENT CALCULATIONS 29

8.1 CONTRACT RATE 29
8.2 NO OBLIGATION 29

ARTICLE 9 BILLING AND PAYMENT 29

9.1 BILLING INVOICES 29
9.2 PAYMENTS 30
9.3 BILLING DISPUTES 30

ARTICLE 10 OPERATIONS AND MAINTENANCE 30

10.1 FACILITY OPERATION 30
10.2 OUTAGE AND PERFORMANCE REPORTING 31
10.3 CONTRACT ADMINISTRATION COMMITTEE AND CONTRACT ADMINISTRATION PROCEDURES 31
10.4 ACCESS TO FACILITY 31
10.5 RELIABILITY STANDARDS 32
10.6 BENEFICIAL ENVIRONMENTAL INTERESTS 32
10.7 AVAILABILITY REPORTING 32
10.8 PLANNED MAINTENANCE SCHEDULE 33
10.9 CERTIFICATION OF RECS 33
10.10 PUBLIC STATEMENTS/OTHER USE 34
10.11 REAL-TIME INFORMATION 34
10.12 WEB-BASED OPERATIONAL REPORTING 34

ARTICLE 11 SECURITY FOR PERFORMANCE 34

11.1 SELLER SECURITY FUND 34
11.2 [redacted] 37

ARTICLE 12 DEFAULT AND REMEDIES 39

12.1 EVENTS OF DEFAULT 39
12.2 FACILITY LENDERS' RIGHT TO CURE DEFAULT OF SELLER 41
12.3 NON-DEFAULTING PARTY RIGHTS 41
12.4 DAMAGES PRIOR TO TERMINATION 41

TABLE OF CONTENTS
(continued)

Page

12.5 TERMINATION 42
12.6 SPECIFIC PERFORMANCE 42
12.7 REMEDIES CUMULATIVE 42
12.8 WAIVER AND EXCLUSION OF OTHER DAMAGES 43
12.9 PAYMENT OF DAMAGES 43
12.10 DUTY TO MITIGATE 43

ARTICLE 13 CONTRACT ADMINISTRATION AND NOTICES 44

13.1 NOTICES IN WRITING 44
13.2 REPRESENTATIVE FOR NOTICES 44
13.3 AUTHORITY OF REPRESENTATIVES 44
13.4 OPERATING RECORDS 44
13.5 OPERATING LOG 44
13.6 BILLING AND PAYMENT RECORDS 45
13.7 EXAMINATION OF RECORDS 45
13.8 EXHIBITS 45
13.9 DISPUTE RESOLUTION 45

ARTICLE 14 FORCE MAJEURE 46

14.1 DEFINITION OF FORCE MAJEURE 46
14.2 APPLICABILITY OF FORCE MAJEURE 47
14.3 LIMITATIONS ON EFFECT OF FORCE MAJEURE 47

ARTICLE 15 REPRESENTATIONS, WARRANTIES AND COVENANTS 48

15.1 SELLER'S REPRESENTATIONS, WARRANTIES AND COVENANTS 48
15.2 PURCHASER'S REPRESENTATIONS, WARRANTIES AND COVENANTS 49

ARTICLE 16 INSURANCE 50

16.1 EVIDENCE OF INSURANCE 50
16.2 TERM AND MODIFICATION OF INSURANCE 50

ARTICLE 17 INDEMNITY 51

ARTICLE 18 LEGAL AND REGULATORY COMPLIANCE 52

ARTICLE 19 ASSIGNMENT, SUBCONTRACTING, AND FINANCING 53

19.1 NO ASSIGNMENT WITHOUT CONSENT 53

TABLE OF CONTENTS
(continued)

Page

19.2 ACCOMMODATION OF FACILITY DEBT REPRESENTATIVE 53
19.3 NOTICE OF FACILITY DEBT REPRESENTATIVE ACTION 54
19.4 TRANSFER WITHOUT CONSENT IS NULL AND VOID 54
19.5 SUBCONTRACTING 54

ARTICLE 20 MISCELLANEOUS 54

20.1 WAIVER 54
20.2 TAXES 54
20.3 FINES AND PENALTIES 55
20.4 RATE CHANGES 55
20.5 DISCLAIMER OF THIRD PARTY BENEFICIARY RIGHTS 56
20.6 RELATIONSHIP OF THE PARTIES 56
20.7 EQUAL EMPLOYMENT OPPORTUNITY COMPLIANCE CERTIFICATION 56
20.8 SURVIVAL OF OBLIGATIONS 56
20.9 SEVERABILITY 56
20.10 COMPLETE AGREEMENT; AMENDMENTS 57
20.11 BINDING EFFECT 57
20.12 HEADINGS 57
20.13 COUNTERPARTS 57
20.14 GOVERNING LAW; CONSENT TO JURISDICTION; WAIVER OF JURY TRIAL 57
20.15 CONFIDENTIALITY 58

EXHIBIT A FORM OF FPL GROUP CAPITAL, INC. GUARANTY

EXHIBIT B FACILITY DESCRIPTION AND SITE MAPS

EXHIBIT C CONTRACT RATES

EXHIBIT D NOTICE ADDRESSES

EXHIBIT E INSURANCE COVERAGE

EXHIBIT F INTENTIONALLY DELETED

EXHIBIT G POINTS OF DELIVERY

EXHIBIT H REAL TIME DATA REQUIREMENTS FOR WIND FARMS

EXHIBIT I [redacted]

TABLE OF CONTENTS
(continued)

Page

EXHIBIT J [redacted]

EXHIBIT K FORM OF AVAILABILITY NOTICE

EXHIBIT L ACCELERATED DISPUTE RESOLUTION PROVISIONS

EXHIBIT M FORM OF CONSENT AND AGREEMENT

RENEWABLE ENERGY PURCHASE AGREEMENT
BETWEEN
FPL ENERGY ILLINOIS WIND, LLC
AND
KENTUCKY POWER COMPANY

This Renewable Energy Purchase Agreement (the "REPA") is made this 21st day of December, 2009, by and between FPL ENERGY ILLINOIS WIND, LLC ("Seller"), a Delaware limited liability company, with a principal place of business at 700 Universe Boulevard, Juno Beach, Florida 33408, and KENTUCKY POWER COMPANY ("Purchaser"), a Kentucky corporation, with a principal place of business at c/o American Electric Power Service Corporation, 1 Riverside Plaza, Columbus, Ohio 43215-2355. Seller and Purchaser are hereinafter referred to individually as a "Party" and collectively as the "Parties".

WHEREAS Seller is developing and constructing and will own and operate a renewable electric generating facility with an expected total name plate capacity of approximately 217.5 MW, and which is further defined below as the "Facility"; and

WHEREAS the Facility is located at Lee and Dekalb Counties, Illinois, and will interconnect with the Transmission Provider's System; and

WHEREAS Seller desires to sell and deliver to Purchaser at the Point of Delivery Purchaser's Contract Capacity Share of the Renewable Energy Products, and Purchaser desires to buy the same from Seller; and

WHEREAS Purchaser has accepted Seller's offer to sell such Renewable Energy Products in accordance with the terms and conditions set forth in this REPA.

NOW THEREFORE, in consideration of the mutual covenants herein contained, the sufficiency and adequacy of which are hereby acknowledged, the Parties agree to the following:

ARTICLE 1
DEFINITIONS AND RULES OF INTERPRETATION

1.1 Rules of Construction.

The capitalized terms listed in this Article shall have the meanings set forth herein whenever the terms appear in this REPA, whether in the singular or the plural or in the present or past tense. Other terms used in this REPA but not listed in this Article shall have meanings as commonly used in the English language and, where applicable, in Good Utility Practice. Words not otherwise defined herein that have well known and generally accepted technical or trade meanings are used herein in accordance with such recognized meanings. In addition, the following rules of interpretation shall apply:

(A) The masculine shall include the feminine and neuter.

(B) References to "Articles," "Sections," or "Exhibits" shall be to articles, sections, or exhibits of this REPA.

(C) The Exhibits attached hereto are incorporated in and are intended to be a part of this REPA; provided, that in the event of a conflict between the terms of any Exhibit and the terms of this REPA, the terms of this REPA shall take precedence.

(D) This REPA was negotiated and prepared by both Parties with the advice and participation of counsel. The Parties have agreed to the wording of this REPA and none of the provisions hereof shall be construed against one Party on the ground that such Party is the author of this REPA or any part hereof.

(E) The Parties shall act reasonably and in accordance with the principles of good faith and fair dealing in the performance of this REPA. Unless expressly provided otherwise in this REPA, (i) where the REPA requires the consent, approval, or similar action by a Party, such consent, approval or similar action shall not be unreasonably withheld, conditioned or delayed, and (ii) wherever the REPA gives a Party a right to determine, require, specify or take similar action with respect to a matter, such determination, requirement, specification or similar action shall be reasonable.

(F) Each reference in this REPA to any agreement or document (including those set forth electronically on an internet web site) or a portion or provision thereof shall be construed as a reference to the relevant agreement or document as amended, supplemented or otherwise modified from time to time.

(G) Each reference in this REPA to applicable laws and to terms defined in, and other provisions of, applicable laws (including those set forth electronically on an internet web site) shall be references to the same (or a successor to the same) as amended, supplemented or otherwise modified from time to time.

(H) Each reference in this REPA to a Person includes its successors and permitted assigns and, in the case of a Governmental Authority, any Person or Persons succeeding, in whole or in part, to its functions and capacities.

(I) In this REPA, the words "include," "includes" and "including" are to be construed as being at all times followed by the words "without limitation."

1.2 Interpretation with Interconnection Agreement.

The Parties recognize that Seller will enter into a separate Interconnection Agreement with the Interconnection Provider.

(A) The Parties acknowledge and agree that the Interconnection Agreement shall be a separate and free-standing contract and that the terms of this REPA are not binding upon the Interconnection Provider.

(B) Notwithstanding any other provision in this REPA, nothing in the Interconnection Agreement shall alter or modify Seller's or Purchaser's rights, duties and obligations under this REPA. This REPA shall not be construed to create any rights between Seller and the Interconnection Provider.

(C) Seller expressly recognizes that, for purposes of this REPA, the Interconnection Provider shall be deemed to be a separate entity and separate contracting party whether or not the Interconnection Agreement is entered into with Purchaser or an Affiliate of Purchaser.

1.3 Interpretation of Arrangements for Electric Supply to the Facility.

The Parties recognize that this REPA does not provide for the supply of any electric service by Purchaser to Seller or to the Facility and Seller must enter into separate arrangements for the supply of electric services to the Facility, including the supply of turbine unit start-up and shutdown house power and energy.

(A) The Parties acknowledge and agree that the arrangements for the supply of electric services to the Facility shall be separate and free-standing arrangements and that the terms of this REPA are not binding upon the supplier of such electric services.

(B) Notwithstanding any other provision in this REPA, nothing in the arrangements for the supply of retail electric services to the Facility shall alter or modify Seller's or Purchaser's rights, duties and obligations under this REPA. This REPA shall not be construed to create any rights between Seller and the supplier of such retail electric services.

(C) Seller expressly recognizes that, for purposes of this REPA, the supplier of retail electric services to the Facility shall be deemed to be a separate entity and separate contracting party whether or not the arrangements for the supply of retail electric services to the Facility is entered into with Purchaser or an Affiliate of Purchaser.

1.4 Definitions.

The following terms shall have the meanings set forth below when used herein:

"Abandonment" means the permanent and complete cessation by Seller prior to the Commercial Operation Date of the design, construction, testing and inspection of the Facility, but only if such cessation is not caused by or attributable to an Event of Default of, or request by, Purchaser, an Emergency, a Forced Outage, a Scheduled Outage/Derating or an event of Force Majeure.

"Affiliate" of any named person or entity means any other person or entity that controls, is under the control of, or is under common control with, the named entity. The term "control" (including the terms "controls", "under the control of" and "under common control with") means the possession, directly or indirectly, of the power to

direct or cause the direction of the management of the policies of a person or entity, whether through ownership interest, by contract or otherwise.

"Ancillary Services" means voltage support, regulation and frequency response services, energy imbalance services, automatic generating control, spinning reserve, non-spinning reserve and replacement reserve, reactive power and any other services that support the transmission of capacity and energy or the reliable operation of the Transmission Provider's transmission system, to the extent included as ancillary services in the Transmission Operator's open access transmission tariff, and in each case, to the extent commonly sold or saleable and to the extent that the assets comprising the Facility are Eligible to provide such services under normal operating conditions.

"Back-Up Metering" shall have the meaning set forth in Section 5.4(C).

"Beneficial Environmental Interests" means all Non-Power Attributes associated in any way, directly or indirectly, with the Facility and all RECs associated with such Non-Power Attributes, excluding (i) investment tax credits, and any other federal or state tax credits, deductions, or exemptions applicable to Seller or any of its Affiliates based on its ownership or operation of the Facility or on the production and sale of Renewable Energy Products to the Purchaser, or (ii) federal or state cash payments, grants under Section 1603 of the American Recovery and Reinvestment Act

of 2009 or outright grants of money relating to the ownership, development, construction, expansion, operation, maintenance or financing of the Facility.

"Business Day" means any calendar day that is not a Saturday, a Sunday, or a NERC Holiday.

"Capacity" means the output level, expressed in MW, that the Facility, or the components of equipment thereof, is capable, as of a given moment, of continuously producing and making available at the Point of Delivery, taking into account the operating condition of the equipment at that time, the auxiliary loads and other relevant factors. Capacity includes all installed capacity and unforced capacity attributed to the Facility by the Transmission Operator, the RFC, any Governmental Authority, or that is commonly sold or saleable to third parties.

"Capacity Deficiency" means, at any time, the amount by which the Committed Capacity exceeds the nameplate capacity of the Commissioned Wind Turbines.

"Cash" shall have the meaning set forth in Section 11.1(C)(2).

"Clock Hour" means sixty-minute increments commencing at the top of the hour on the clock (i.e., 12 o'clock)

"Close of the Business Day" means 5:00 PM EPT on a Business Day.

"Commercial Operation" means the period beginning on the Commercial Operation Date and continuing through the Term of this REPA.

"Commercial Operation Date" or "COD" means the date following the date on which Seller provides written notice to Purchaser that all of the milestones specified in Section 4.7 have occurred or otherwise been satisfied pursuant to this Agreement.

"Commercial Operation Milestone" means September 30, 2010.

"Commission" means the Kentucky Public Service Commission.

"Commissioned" means, with respect to any Wind Turbine, that the requirements of Section 4.7 as they apply to such Wind Turbine have been satisfied.

"Committed Capacity" means 100 MW.

"Communications Equipment" means the communication circuits from the Facility to Purchaser for the purpose of telemetering, supervisory control and data acquisition, transmittal of real time data as described in Exhibit H and voice communications as reasonably required by Purchaser.

[redacted]

"Consent and Agreement" shall have the meaning set forth in Section 19.2.

"Contract Administration Committee" means one representative each from Purchaser and Seller pursuant to Section 10.3.

"Contract Administration Procedures" means those procedures developed pursuant to Section 10.3.

"Contract Capacity Share" means a ratio equal to 100 MW divided by the Facility Capacity in MW.

"Contract Rate" means the applicable rate set forth in Exhibit C.

"Contract Start Date" means the earlier of (i) October 1, 2010 and (ii) the third (3rd) Business Day after Seller's receipt of notice that Purchaser has satisfied or waived the condition in Section 6.1.

"Contract Year" means each calendar year of the Term, whether such calendar year is comprised of 365 or 366 Days, commencing with the first calendar year subsequent to the year in which the Contract Start Date occurs, provided that the last Contract Year of the Term may be less than a full calendar year if this REPA is terminated or expires prior to December 31 of such calendar year.

"Control Area" means the system of electrical generation, distribution, and transmission facilities within which generation is regulated in order to maintain interchange schedules with other such systems.

"Day" means a calendar day.

"Delay Damages" shall have the meaning set forth in Section 4.1.

"Delay Damages Commencement Date" shall mean the date forty-five (45) Days after the Commercial Operation Milestone.

"Delivery Period" shall mean the period that commences on at 0000 hours on the Contract Start Date and continues through the remainder of the Term.

"Deviation" shall have the meaning set forth in Section 5.6(B)

"Dispute" shall have the meaning set forth in Section 13.9(A).

"Dispute Notice" shall have the meaning set forth in Section 13.9(A).

"Electric Metering Device(s)" means all meters, metering equipment, and data processing equipment used to measure, record, or transmit data relating to the Renewable Energy from the Facility. Electric Metering Devices does not include the metering current transformers or the metering voltage transformers.

"Emergency" means an emergency condition as defined under the Interconnection Agreement or the OATT.

"Energy" means three-phase, 60-cycle alternating current electric energy, expressed in MWh.

"Environmental Contamination" means the introduction or presence of Hazardous Materials at such levels, quantities or location, or of such form or character, as to constitute a violation of federal, state or local laws or regulations, and present a material risk under federal, state or local laws and regulations that the Site will not be available or usable for the purposes contemplated by this REPA.

"EPT" means Eastern Prevailing Time.

"Event of Default" shall have the meaning set forth in Article 12.

"Facility" means Seller's proposed electric generating facility and Seller's Interconnection Facilities, as identified and described in Article 3 and Exhibit B to this REPA, including all of the following, the purpose of which is to produce renewable wind power and deliver such wind power to the Point of Delivery: Seller's equipment, buildings, all of the generation facilities, including generators, turbines, step-up transformers, output breakers, facilities necessary to connect to the Point of Delivery, protective and associated equipment, improvements, and other tangible assets, contract rights, easements, rights of way, surface use agreements and other interests or rights in real estate reasonably necessary for the construction, operation, and maintenance of the electric generating facility that produces the Renewable Energy subject to this REPA, any and all additions, replacements or modifications thereof.

"Facility Capacity" means the Capacity capable of being generated from the Facility based on the aggregate nameplate rating of all of the Wind Turbines comprising the Facility.

"Facility Debt" means the obligations of Seller to any lender or tax equity investor pursuant to the Financing Documents, including principal of, premium and interest on indebtedness, fees, expenses or penalties, amounts due upon acceleration, prepayment or restructuring, swap or interest rate hedging breakage costs and any claims or interest due with respect to any of the foregoing.

"Facility Debt Representative" means any single trustee or agent on behalf of the Facility Lenders or such other single representative designated in writing by Seller.

"Facility Lenders" means any and all Persons or successors in interest thereof (A) lending money or extending credit (whether directly to Seller or to an Affiliate of Seller) as follows: (i) for the construction, interim or permanent financing or refinancing of the Facility; (ii) for working capital or other ordinary business requirements of the Facility (including the maintenance, repair, replacement or improvement of the Facility); (iii) for any development financing, bridge financing, credit support, credit enhancement or interest rate protection in connection with the Facility; (iv) for any capital improvement or replacement related to the Facility; or (v) for the purchase of the Facility and the related rights from Seller; and/or (B) participating (directly or indirectly) as an equity investor in the Facility; and/or (C) any lessor under a lease finance arrangement relating to the Facility.

"Federal Funds Effective Rate" means the rate for that day opposite the caption "Federal Funds (Effective)" as set forth in the weekly statistical release designated as H. 15 (519), or any successor publication, published by the Board of Governors of the Federal Reserve System.

"FERC" means the Federal Energy Regulatory Commission.

"Financing Documents" means the loan and credit agreements, notes, bonds, indentures, security agreements, lease financing agreements, mortgages, deeds

of trust, interest rate exchanges, swap agreements and other documents relating to the development, bridge, tax equity, construction or permanent debt financing for the Facility, including any credit enhancement, credit support, working capital financing, letter of credit facilities, and all such documents or agreements related to any refinancing or replacement of any of the foregoing, and any and all amendments, modifications, or supplements to the foregoing that may be entered into from time to time at the discretion of Seller in connection with development, construction, ownership, leasing, operation or maintenance of the Facility.

"Force Majeure" shall have the meaning set forth in Article 14.

"Forced Outage" means any condition at the Facility that requires immediate removal of the Facility, or some part thereof, from service, another outage state, or a reserve shutdown state.

"GATS" means the Generation Attribute Tracking System administered by PJM Environmental Information Services, Inc. ("PJM EIS") and providing environmental and emissions attributes reporting and tracking services to its subscribers in support of renewable portfolio standards and other information disclosure requirements that may be implemented by Governmental Authorities. GATS tracks generation attributes and the ownership of the attributes as they are traded or used to meet standards of Governmental Authorities. GATS includes any successor tracking system or systems with the same or similar purpose administered by PJM EIS.

"GATS Certificates" means certificates recognized by GATS and associated with the generation of electricity from the Facility.

"Good Utility Practice(s)" means the practices, methods, and acts (including the practices, methods, and acts engaged in or approved by a significant portion of the wind power generation industry, the Transmission Operator or NERC) that, at a particular time, in the exercise of reasonable judgment in light of the facts known or that should reasonably have been known at the time a decision was made, would have been expected to accomplish the desired result in a manner consistent with law, regulation, permits, codes, standards, reliability, safety, environmental protection, economy, and expedition. Good Utility Practices are not intended to be the optimal practice, method or act to the exclusion of all others, but rather are intended to be any of the practices, methods or acts generally accepted in the region in which the Facility is located. With respect to the Facility, Good Utility Practice(s) includes taking reasonable steps to ensure that:

(A) commercially reasonable levels of equipment, materials, resources, and supplies, including spare parts inventories, are available to meet the Facility's needs;

(B) sufficient operating personnel are available to operate the Facility on a 24 hour basis in accordance with commercially reasonable wind industry operating practices for wind power generation equipment and are adequately

experienced and trained and licensed as necessary to operate the Facility properly, efficiently, and in coordination with Purchaser and are capable of responding to reasonably foreseeable emergency conditions whether caused by events on or off the Site;

(C) preventive, routine, and non-routine maintenance and repairs are performed on a commercially reasonable basis that enables reliable, long-term and safe operation, and are performed by knowledgeable, trained, and experienced personnel utilizing proper equipment and tools;

(D) appropriate and commercially reasonable monitoring and testing are performed to determine that equipment is functioning as designed; and

(E) equipment is not operated in a reckless manner or in a manner unsafe to workers, the general public, or the interconnected system or contrary to environmental laws, permits or regulations or without regard to defined limitations such as, flood conditions, safety inspection requirements, operating voltage, current, volt-ampere reactive (VAr) loading, frequency, rotational speed, polarity, synchronization, or control system limits.

"Governmental Authority" means any federal, state, local or municipal governmental body; any governmental, quasi-governmental, regulatory or administrative agency, commission, body or other authority exercising or entitled to exercise any administrative, executive, judicial, legislative, policy, regulatory or taxing authority or power; or any court or governmental tribunal.

"Hazardous Materials" means any substance, material or particulate matter that is regulated by any local governmental authority, any applicable State, or the United States of America, as an environmental pollutant or dangerous to public health, public welfare, or the natural environment including protection of nonhuman forms of life, land, water, groundwater, and air, including any material or substance that is (i) defined as "toxic," "polluting," "hazardous waste," "hazardous material," "hazardous substance," "extremely hazardous waste," "solid waste" or "restricted hazardous waste" under any provision of local, state, or federal law; (ii) petroleum, including any fraction, derivative or additive; (iii) asbestos; (iv) polychlorinated biphenyls; (v) radioactive material; (vi) designated as a "hazardous substance" pursuant to the Clean Water Act, 33 U.S.C. §1251 *et seq.* (33 U.S.C. §1251); (vii) defined as a "hazardous waste" pursuant to the Resource Conservation and Recovery Act, 42 U.S.C. §6901 *et seq.* (42 U.S.C. §6901); (viii) defined as a "hazardous substance" pursuant to the Comprehensive Environmental Response, Compensation, and Liability Act, 42 U.S.C. §9601 *et seq.* (42 U.S.C. §9601); (ix) defined as a "chemical substance" under the Toxic Substances Control Act, 15 U.S.C. §2601 *et seq.* (15 U.S.C. §2601); or (x) defined as a pesticide under the Federal Insecticide, Fungicide, and Rodenticide Act, 7 U.S.C. §136 *et seq.* (7 U.S.C. §136).

"Indemnified Party" shall have the meaning set forth in Article 17.

"Indemnifying Party" shall have the meaning set forth in Article 17.

"Interconnection Agreement" means the separate generation interconnection agreement between Seller and the Interconnection Provider for interconnection of the Facility to the Transmission Provider's System, as such agreement may be amended from time to time.

"Interconnection Facilities" means the facilities necessary to connect Transmission Provider's System to the Point of Delivery, including breakers, bus work, bus relays, and associated equipment installed by the Interconnection Provider for the direct purpose of interconnecting the Facility, along with any easements, rights of way, surface use agreements and other interests or rights in real estate reasonably necessary for the construction, operation and maintenance of such facilities. Arrangements for the installation and operation of the Interconnection Facilities shall be governed by the Interconnection Agreement.

"Interconnection Provider" means the Transmission Operator or any Transmission Provider responsible for the operation of the Interconnection Facilities and other equipment and facilities with which the Facility interconnects at the Point of Delivery.

"Issuer" means a financial institution or company reasonably acceptable to Purchaser and Seller.

"Locational Marginal Price" or "LMP" means for each hour of a Day, the day-ahead or real-time locational marginal price, as specified herein, expressed in dollars per MWh at the Delivery Point for such hour, as determined by PJM in accordance with the OATT and other applicable PJM Manuals and Agreements.

"Minimum Availability Period" shall have the meaning set forth in Section 12.1(F).

"Moody's" means Moody's Investors Service.

"MW" means megawatt, an amount of power equal to 1,000 kilowatts or 1,000,000 watts.

"MWh" means megawatt-hour, an amount of power equal to 1,000 kilowatt-hours or 1,000,000 watt-hours.

"NERC" means the North American Electric Reliability Corporation.

"NERC Holiday" means every Day other than a Saturday or Sunday which the NERC declares to be a holiday for power scheduling purposes.

"Network Resource" shall have the meaning set forth in the OATT.

"Non-Power Attributes" means any characteristic of the Facility related to its benefits to the environment, including any avoided, reduced, displaced or off-set emissions of pollutants to the air, soil or water such as sulfur dioxides (SO_x), nitrogen oxides (NO_x), carbon monoxide (CO), mercury (Hg), particulates, and any other pollutant that is now or may in the future be regulated under federal, state or local pollution control laws, regulations or ordinances or any voluntary rules, guidelines or programs; and further include any avoided emissions of carbon dioxide (CO_2) and any other greenhouse gas (GHG) that contributes to the actual or potential threat of altering the Earth's climate by trapping heat in the atmosphere. Non-Power Attributes do not include (i) investment tax credits, and any other federal or state tax credits, deductions, or exemptions applicable to Seller or any of its Affiliates based on its ownership or operation of the Facility or on the production and sale of Renewable Energy Products to the Purchaser, or (ii) federal or state cash payments , grants under Section 1603 of the American Recovery and Reinvestment Act of 2009 or outright grants of money relating to the ownership, development, construction, expansion, operation, maintenance or financing of the Facility.

"OATT" means the FERC filed Open Access Transmission Service Tariff of the Transmission Operator, as it may be amended and approved by FERC.

"Off Peak Hours" means the hours from hour ending 0100 through hour ending 0700 and the hour ending 2400 Monday through Friday; and hours ending 0100 through hour ending 2400 Saturday, Sunday and NERC Holidays. All times will be in EPT in accordance with applicable PJM requirements.

"Operating Records" means operating logs, blueprints for construction, operating manuals, all warranties on equipment, and all documents, whether in printed or electronic format, that the Seller uses or maintains for the operation of the Facility.

[redacted]

"Peak Hours" means the hours from the hour ending 0800 through the hour ending 2300, Monday through Friday, for the months March, April, May, June, September, October and November, excluding NERC Holidays. All times will be in EPT in accordance with applicable PJM requirements.

"Penalties" means penalties imposed by Governmental Authorities.

"Person" means an individual, corporation, limited liability company, voluntary association, joint stock company, business trust, partnership, Governmental Authority, or other entity.

"PJM" means PJM Interconnection, LLC.

"PJM Manuals and Agreements" means, collectively, (i) all instructions, rules, procedures and guidelines established by PJM, (ii) all documents and protocols issued by PJM and (iii) all agreements to which Seller, Purchaser or any Affiliates of Purchaser, on the other hand, and PJM, on the other hand, are parties, either bilaterally or in concert with other entities, as may be in effect from time to time, in each case for the operation, planning, and accounting requirements of PJM and the PJM Interchange Energy Market, including the OATT.

"Point of Delivery" means the electric interconnection point, as shown on Exhibit G, at which point the quantities of Renewable Energy and Ancillary Services delivered are recorded and measured by the Interconnection Provider's revenue meters.

"Premium Peak Hours" means the hours from the hour ending 0800 through the hour ending 2300, Monday through Friday, for the months January, February, July, August and December, excluding NERC Holidays. All times will be in EPT in accordance with applicable PJM requirements.

"Proration Factor" means, if the Contract Year in which this REPA is terminated or expires is less than a full calendar year, then, with respect to such Contract Year, an amount equal to a fraction, the numerator of which is the number of Days falling within the Delivery Period in such Contract Year, and the denominator of which is 365 or 366, as applicable to the calendar year that includes such Contract Year.

"Purchaser Security Fund" means the fund that Purchaser is required to establish and maintain, pursuant to Section 11.2, as security for Purchaser's performance under this REPA.

"Reliability Curtailment" means any curtailments of delivery of Renewable Energy resulting from (i) an Emergency, (ii) any other order or directive of the Interconnection Provider or the Transmission Operator, which order or directive may be directly communicated to Seller by the Interconnection Provider, the Transmission Provider or the Transmission Operator or indirectly to Seller by Purchaser promptly upon receipt thereof, (iii) Seller's failure to maintain in full force and effect any permit, consent, license, approval, or authorization from any Governmental Authority required by law to construct or operate the Facility, or (iv) Seller's operation of the Facility by Seller in a manner inconsistent with Good Utility Practices.

"Renewable Energy" means the net Energy generated exclusively by the Facility from wind and delivered to the Point of Delivery as measured by the Electric Metering Devices installed pursuant to Section 5.4.

"Renewable Energy Credit" or "REC" means any credits, credit certificates, rights, powers, privileges or similar items in existence now or as made available after the execution of this Agreement that is related to the Non-Power Attributes of the Facility such as those for greenhouse gas reduction, green certificates or the generation of green power or renewable energy, or for satisfying renewable

portfolio standards or similar renewable energy mandates, or offsets of emissions of greenhouse gases, in each case created by any governmental agency and/or independent certification board or group generally recognized in the electric power generation industry, and generated by or associated with the Facility, but specifically excluding (i) investment tax credits, and any other federal or state tax credits, deductions, or exemptions applicable to Seller or any of its Affiliates based on its ownership or operation of the Facility or on the production and sale of Renewable Energy Products to the Purchaser and (ii) cash payments , grants under Section 1603 of the American Recovery and Reinvestment Act of 2009 or outright grants of money relating in any way to the Facility. Without limiting the generality of the foregoing definitions, RECs shall include GATS Certificates.

"Renewable Energy Products" means, collectively, the Renewable Energy and Ancillary Services produced by the Facility and all of the associated Capacity and Beneficial Environmental Interests.

"REPA" means this Renewable Energy Purchase Agreement between Seller and Purchaser.

"Replacement Energy Costs" means, for any Calculation Period, Purchaser's average cost of replacement Renewable Energy, or Energy plus replacement Renewable Energy Credits, over such Calculation Period, calculated in accordance with part (d) of Exhibit I.

[redacted]

"RFC" means the Reliability*First* Corporation, one of the eight regional reliability councils approved by the North American Electric Reliability Corporation (NERC).

"Scheduled Outage/Derating" means a planned interruption or reduction of the Facility's generation by Seller that both (i) has been coordinated in advance with Purchaser, with a mutually agreed start date and duration, and (ii) is required for inspection, or preventive or corrective maintenance.

"Seller's Merchant Capacity" means the portion of the Facility Capacity not committed to Purchaser under this REPA or to a Third Party Purchaser under a Third Party Power Purchase Agreement.

"Seller Security Fund" means the fund that Seller is required to establish and maintain, pursuant to Section 11.1, as security for Seller's performance under this REPA.

"Seller's Interconnection Facilities" means the equipment between the high side disconnect of the step-up transformer and the Point of Delivery, including all related relaying protection and physical structures as well as all transmission facilities required to access the Transmission Provider's System at the Point of Delivery, along with any easements, rights of way, surface use agreements and other interests or rights in real estate reasonably necessary for the construction, operation and maintenance of such facilities. On the high side of the step-up transformer it includes Seller's load control equipment as provided for in the Interconnection Agreement. This equipment is located within the Site and is conceptually depicted in Exhibit B to this REPA.

"Site" means the parcel or parcels of real property on which the Facility will be constructed and located, including any easements, rights of way, surface use agreements and other interests or rights in real estate reasonably necessary for the construction, operation and maintenance of the Facility. The Site is more specifically described in Section 3.2 and Exhibit B to this REPA.

"Standard & Poor's" or "S&P" means Standard & Poor's, a division of the McGraw-Hill Companies.

"Tax" or "Taxes" shall have the meaning set forth in Section 20.2

"Term" means the period of time during which this REPA shall remain in full force and effect, and which is further defined in Article 2.

"Third Party Power Purchase Agreement" means any written agreement between Seller and a Person other than Purchaser for the purchase of Renewable Energy.

"Third Party Purchaser" means any Person that is a party to, and purchases Renewable Energy under, a Third Party Power Purchase Agreement.

"Transmission Operator" means PJM or any successor independent system operator, regional transmission operator or other transmission operator from time to time having authority to control the transmission Control Area to which the Facility is interconnected.

"Transmission Provider" means any Person or Persons that owns, operates or controls facilities used for the transmission of electrical energy from the Facility in interstate commerce.

"Transmission Provider's System" means the contiguously interconnected electric transmission facilities, including Interconnection Provider's interconnection facilities, over which the Transmission Provider has rights to provide for the bulk transmission of capacity and energy from the Point of Delivery.

"Uncommitted Capacity" means the portion of the Facility Capacity in excess of Purchaser's Contract Capacity Share of the Facility Capacity.

"Wind Turbines" means those generating devices powered by the wind that are included in the Facility.

ARTICLE 2
TERM AND TERMINATION

This REPA shall become effective as of the date of its execution, and shall remain in full force and effect until the twentieth (20th) anniversary of the last day of the month in which the Contract Start Date occurs, subject to any early termination or extension provisions set forth herein; provided, however, that Seller's obligation to deliver and Purchaser's obligation to purchase Renewable Energy Products shall not commence until the beginning of the Delivery Period except as specifically provided herein. Applicable provisions of this REPA shall continue in effect after termination, including early termination, to the extent necessary to enforce or complete the duties, obligations or responsibilities of the Parties arising prior to termination and, as applicable, to provide for: final billings and adjustments related to the period prior to termination, repayment of any money due and owing to either Party pursuant to this REPA, repayment of principal and interest associated with security funds, the indemnifications specified in this REPA, limitations of liability, and the resolution of disputes between the Parties.

ARTICLE 3
FACILITY DESCRIPTION

3.1 Summary Description.

Seller shall construct, own, operate, and maintain the Facility, which is expected to consist initially of one hundred forty-five (145) GE 1.5 XLE Wind Turbines, each rated at 1,500 kW and associated equipment having an initial nameplate capacity of approximately 217.5 MW. Exhibit B to this REPA provides a detailed description of the Facility, including identification of the equipment and components, which make up the

Facility. Seller shall have the right, in its sole discretion, to install additional Wind Turbines at the Facility, provided, however, that the aggregate nominal or "nameplate" MW rating of the Wind Turbines comprising the Facility will not exceed 240 MW at any time during the Term. Any additional wind turbines installed on the Site in excess of such 240 MW shall not comprise the Facility or share the same Point of Delivery or revenue meter used in connection with this REPA.

3.2 Location.

The Facility shall be located on the Site and shall be identified as Seller's Lee-Dekalb Wind Energy Center. The Facility is located in Lee and Dekalb Counties, Illinois. A scaled map that identifies the Site, the location of the Facility at the Site, the location of the Point of Delivery and the location of the important ancillary facilities and Interconnection Facilities, is included in Exhibit B to this REPA.

3.3 General Design of the Facility.

Seller shall construct the Facility according to Good Utility Practice(s), the Interconnection Agreement and rules of the Transmission Operator, including the PJM Manuals and Agreements. In addition to the requirements of the Interconnection Agreement, the design of the Facility shall at all times include:

(A) the required panel space and 125V DC battery supplied voltage to accommodate Purchaser's metering, generator telemetering equipment and Communications Equipment;

(B) the Communications Equipment; and

(C) metering accuracy current transformers and voltage transformers located at the Point of Delivery (or some other point mutually agreed to by the Parties) as required to connect to the Electric Metering Devices.

ARTICLE 4
COMMERCIAL OPERATION

4.1 Commercial Operation.

Subject to the satisfaction of the conditions set forth in Section 6.2 and extension as otherwise specifically provided for herein, the Facility shall achieve the Commercial Operation Date no later than the Commercial Operation Milestone. Subject to the limitations provided for in the immediately succeeding sentence, in the event that the Facility does not achieve the Commercial Operation Date on or before the Delay Damages Commencement Date, Seller shall pay Purchaser as liquidated damages [redacted] per MW of Capacity Deficiency per Day for each Day after the Delay Damages Commencement Date until the Commercial Operation Date ("Delay Damages"). [redacted]

[redacted]

4.2 [Intentionally Deleted].

4.3 Site Report.

Seller shall provide Purchaser, on or before sixty (60) days after the execution of this REPA, with a copy of the report summarizing its Phase I environmental investigation of the Site, together with any data or information generated pursuant to such investigation.

4.4 [Intentionally Deleted].

4.5 Progress Reports.

Commencing upon the execution of this REPA, Seller shall submit to Purchaser, within the first fifteen (15) Days of each calendar month until the Commercial Operation Date is achieved, reports regarding the progress of development and construction of the Facility in a form reasonably satisfactory to Purchaser. These progress reports shall describe the status of the development and construction of the Facility as of the end of the preceding month, including (a) a description of the progress of development and construction, (b) an explanation of any changes in the development and construction schedule and (c) an estimate of the Commercial Operation Date. Commencing upon the execution of this REPA, Seller will additionally advise Purchaser weekly on the status of Wind Turbine Commissioning until the Commercial Operation Date is achieved.

4.6 Purchaser's Rights During Construction.

Upon reasonable prior written notice, Purchaser shall have the right to monitor the construction, start-up and testing of the Facility during normal business operating hours, and Seller shall comply with all reasonable requests of Purchaser with respect to the monitoring of these events, provided, however, that Purchaser shall not unreasonably interfere with or disrupt the activities of the Seller. Seller shall cooperate in such physical inspections of the Facility as may be reasonably requested by Purchaser during and after completion of construction. All persons visiting the Facility on behalf of Purchaser shall comply with all of Seller's applicable safety and health rules and requirements. Purchaser's technical review and inspection of the Facility shall not

be construed as endorsing the design thereof nor as any warranty of safety, durability, or reliability of the Facility.

4.7 Commercial Operation Milestones.

Seller shall use commercially reasonable efforts to achieve the following milestones within a reasonable time after the effectiveness of this REPA:

(A) Wind Turbines with an aggregate nameplate capacity of at least [redacted] MW are tested and commissioned at the Facility and are able to produce and deliver Energy to the Point of Delivery in compliance with this Agreement;

(B) the Facility has achieved initial synchronization with the Transmission Provider's System;

(C) the interconnection of the Facility to the Transmission Provider's System has been completed in material compliance with the Interconnection Agreement and has operated at a generation level acceptable to the Interconnection Provider in material compliance with the operating requirements of the Interconnection Agreement, in either case, such that there is no material adverse effect on Seller's or Purchaser's ability to perform its obligations under this REPA;

(D) Seller can demonstrate that it can reliably transmit real time data and measurements with Purchaser in accordance with the requirements of Exhibit H;

(E) all arrangements for the supply of required electric services to the Facility, including the supply of turbine unit start-up and shutdown power and energy, house power and maintenance power have been completed by Seller separate from this REPA, are in effect, and are available for the supply of such electric services to the Facility;

(F) the Seller Security Fund has been established pursuant to Section 11.1;

(G) certificates of insurance evidencing the coverages required by Article 16 have been obtained and submitted to Purchaser;

(H) all permits, consents, licenses, approvals, and authorizations required to be obtained by Seller from any Governmental Authority to construct and operate the Facility in compliance with applicable law and this REPA have been obtained;

(I) Seller has made all necessary filings and applications with Governmental Authorities for accreditation and participation in GATS and in any applicable federal or state REC certification program pursuant to Section 10.9; and

[redacted]

4.8 [Intentionally Deleted].

4.9 QF Waiver.

For so long as this REPA is in effect, Seller waives, and agrees not to assert, the rights Seller may have against Purchaser to cause Purchaser to purchase or transmit energy or capacity pursuant to 18 C.F.R. section 292.303 or section 292.304 by virtue of the status of the Facility as a qualifying cogeneration facility as defined in the Public Utility Regulatory Policies Act of 1978, as amended.

ARTICLE 5
DELIVERY AND METERING

5.1 Seller's and Purchaser's Obligations.

Subject to, and in accordance with, the terms and conditions of this REPA, including Section 5.3(A), Purchaser does hereby agree to purchase and pay for Purchaser's Contract Capacity Share of Renewable Energy Products, and Seller does hereby agree to sell and deliver to the Point of Delivery, or cause to be delivered to the Point of Delivery, Purchaser's Contract Capacity Share of the Renewable Energy Products during the Delivery Period. Subject to Section 7.1, Purchaser shall have the exclusive right to purchase and receive all of Purchaser's Contract Capacity Share of Renewable Energy Products, with the exception of Energy produced by Seller for its own use at the Facility for station power. Seller shall not offer, sell or make available any of Purchaser's Contract Capacity Share of Renewable Energy Products or dispatch Purchaser's Contract Capacity Share thereof to or for the benefit of Seller (except for its own use at the Facility for station power) or any other Person, other than to Purchaser. For the avoidance of doubt, Purchaser hereby acknowledges and agrees that Seller may offer, sell and make available to third parties any of the Uncommitted Capacity of Renewable Energy Products or dispatch any of the Uncommitted Capacity thereof to or for the benefit of Seller. Notwithstanding any provision herein to the contrary and without in any way restricting or limiting Purchaser's ability to declare an Economic Curtailment, Purchaser's failure, inability or unwillingness to pay congestion charges,

location marginal pricing differentials or any other congestion costs or charges shall not excuse Purchaser's obligation to purchase and accept the Renewable Energy Products hereunder.

5.2 Required Operation.

Except to the extent the Facility is actually unavailable or limited (including in accordance with Good Utility Practice(s) and due to curtailments under Section 7.4(A)), Seller shall operate the Facility to provide the Renewable Energy Products to Purchaser in all hours of the Delivery Period. Seller agrees that, notwithstanding anything herein to the contrary, Seller will not curtail or otherwise reduce deliveries of Renewable Energy Products in order to sell such Renewable Energy Products to other purchasers.

5.3 Delivery Arrangements.

[redacted]

(C) Seller shall be responsible for paying any and all transmission upgrade costs identified by the Transmission Operator as Seller's responsibility in order to designate the Facility as a Network Resource.

5.4 Electric Metering Devices.

(A) Seller will comply with the terms and conditions of the Interconnection Agreement. The following provisions on Electric Metering Devices shall apply only to the extent they do not conflict with the performing party's rights and obligations under the Interconnection Agreement or the OATT, as applicable.

(B) Seller shall provide Purchaser with reasonable advance notice of, and permit a representative of Purchaser to witness and verify, inspections and tests of the Electric Metering Devices, provided, however, that Purchaser shall not unreasonably interfere with or disrupt the activities of Seller and shall comply with all of Seller's safety standards. Upon request by Purchaser, Seller shall perform additional inspections or tests of any Electric Metering Device and shall permit a qualified representative of Purchaser to inspect or witness the testing of any Electric Metering Device, provided, however, that Purchaser shall not unreasonably interfere with or disrupt the activities of Seller and shall comply with all of Seller's safety standards. The

actual expense of any such requested additional inspection of testing shall be borne by Purchaser, unless upon such inspection or testing an Electric Metering Device is found to register inaccurately by more than the allowable limits established in this Article, in which event the expense of the requested additional inspection or testing shall be borne by Seller. If requested by Purchaser in writing, Seller shall provide copies of any inspection or testing reports to Purchaser.

(C) Purchaser and Seller each may elect to install and maintain, at its own expense, backup metering devices ("Back-Up Metering") in addition to the Electric Metering Devices. Each Party, at its own expense, shall inspect and test its Back-Up Metering upon installation and at least annually thereafter. Each Party shall provide the other Party with reasonable advance notice of, and permit a representative of the other Party to witness and verify, such inspections and tests, provided, however, that the observing Party shall not unreasonably interfere with or disrupt the activities of the testing Party and shall comply with all of the testing Party's safety standards. Upon request by a Party, the other Party shall perform additional inspections or tests of its Back-Up Metering and shall permit a qualified representative of the requesting Party to inspect or witness the testing of such Back-Up Metering, provided, however, that the observing Party shall not unreasonably interfere with or disrupt the activities of the testing Party and shall comply with all of the testing Party's safety standards. The actual expense of any such requested additional inspection or testing shall be borne by the requesting Party, unless, upon such inspection or testing, the Back-Up Metering is found to register inaccurately by more than the allowable limits established in this Article, in which event the expense of the requested additional inspection or testing shall be borne by the testing Party. If requested by the requesting Party in writing, the testing Party shall provide copies of any inspection or testing reports to the requesting Party.

(D) If any Electric Metering Devices, or any Back-Up Metering, are found to be defective or inaccurate, they shall be adjusted, repaired, replaced, or recalibrated as near as practicable to a condition of zero error by the Party owning such defective or inaccurate device and at that Party's expense. The Party discovering such defect or inaccuracy shall promptly notify the other Party of such discovery's expense.

5.5 Adjustment for Inaccurate Meters.

(A) The following provisions on Adjustment for Inaccurate Meters shall apply only to the extent they do not conflict with the performing Party's rights and obligations under the Interconnection Agreement or the OATT, as applicable.

(B) If an Electric Metering Device, or Back-Up Metering, fails to register, or if the measurement made by an Electric Metering Device, or Back-Up Metering, is found upon testing to be inaccurate by more than one percent (1.0%) from the measurement made by the standard meter used in the test, an adjustment shall be made correcting all measurements by the inaccurate or defective Electric Metering Device, or Back- Up Metering, for both the amount of the inaccuracy and the period of the inaccuracy, in the following manner:

(C) In the event that the Electric Metering Device is found to be defective or inaccurate, the Parties shall use the Back-Up Metering, if installed, to determine the amount of such inaccuracy, provided, however, that the Back-Up Metering has been tested and maintained in accordance with the provisions of this Article. If both Parties have installed Back-Up Metering, and the Back-Up Metering of both Parties is inaccurate by not more than one percent (1.0%) from the measurements made by the standard meter used in the test, the readings from the Back-Up Metering whose readings most closely conforms with the measurements made by the standard meter shall be used. In the event that neither Party has installed Back-Up Metering, or the Back-Up Metering is also found to be inaccurate by more than one percent (1.0%) from the measurement made by the standard meter used in the test, the Parties shall estimate the amount of the necessary adjustment on the basis of deliveries of Renewable Energy from the Facility during periods of similar operating conditions when the Electric Metering Device was registering accurately. The adjustment shall be made for the period during which inaccurate measurements were made.

(D) In the event that the Parties cannot agree on the actual period during which the inaccurate measurements were made, the period during which the measurements are to be adjusted shall be the shorter of (i) the last one-half of the period from the last previous test of the Electric Metering Device to the test that found the Electric Metering Device to be defective or inaccurate, or (ii) the one hundred eighty (180) Days immediately preceding the test that found the Electric Metering Device to be defective or inaccurate.

(E) To the extent that the adjustment period covers a period of deliveries for which payment has already been made by Purchaser, Purchaser shall use the corrected measurements as determined in accordance with this Article to recompute the amount due for the period of the inaccuracy and shall subtract the previous payments by Purchaser for this period from such re-computed amount. If the difference is a positive number, the difference shall be paid by Purchaser to Seller; if the difference is a negative number, that difference shall be paid by Seller to Purchaser, or at the discretion of Purchaser, may take the form of an offset to payments due Seller by Purchaser (or by payment to Purchaser, if sufficient payments do not remain to offset). Payment of such difference by the owing Party shall be made not later than thirty (30) Days after the owing Party receives notice of the amount due, unless Purchaser elects payment via an offset.

5.6 Scheduling Arrangements.

[redacted]

[redacted]

[redacted]

[redacted]

[redacted]

[redacted]

[redacted]

ARTICLE 6
CONDITIONS PRECEDENT

6.1 Purchaser Condition Precedent.

No later than thirty (30) Days after execution of this REPA, Purchaser may, but shall not be obligated to, request recovery of costs associated with this REPA without modification from the Commission. If Purchaser fails to make a timely cost recovery request, condition precedent in this Section 6.1 shall be deemed waived and this REPA shall remain in full force and effect thereafter. In the event that Purchaser makes such a timely cost recovery request, but despite commercially reasonable efforts, is unable to obtain the following by September 15, 2010, Purchaser, by notice to Seller delivered on or prior to September 30, 2010, may terminate this REPA, without any further financial or other obligation by either Party as a result of such termination:

> A final, non-appealable order from the Commission approving the terms and conditions of the REPA and authorizing Purchaser to recover all of the jurisdictional costs associated with this REPA through Kentucky Power Company Base Rates.

If Purchaser fails to deliver such a notice of termination, the condition precedent in this Section 6.1 shall be deemed waived and this REPA shall remain in full force and effect thereafter.

6.2 Seller Condition Precedent.

[redacted]

ARTICLE 7
SALE AND PURCHASE OF RENEWABLE ENERGY

7.1 Sale and Purchase.

Beginning on the Contract Start Date, Seller shall generate from the Facility, deliver to the Point of Delivery, and sell to Purchaser, and, subject to the terms and conditions of this REPA, including Section 5.3(A) and Section 5.6, Purchaser shall purchase and pay for, at the Contract Rate, Purchaser's Contract Capacity Share of all Renewable Energy generated by the Facility. Purchaser shall have no obligation to pay for any Energy that has not actually been generated by the Facility, measured by the Electric Metering Device(s) and delivered to Purchaser at the Point of Delivery, except in connection with an Economic Curtailment. To the extent Renewable Energy is delivered by Seller to the Point of Delivery contrary to an Economic Curtailment or Reliability Curtailment, Purchaser shall pay for such Renewable Energy at the rates provided herein, but such purchase price shall be reduced by all direct out of pocket net costs (including any positive difference between the Contract Rate and the real-time LMP) incurred by Purchaser as a result of using or disposing of any Renewable Energy deliveries contrary to an Economic Curtailment or Reliability Curtailment.

[redacted]

[redacted]

[redacted]

7.3 Title and Risk of Loss.

As between the Parties, Seller shall be deemed to be in control of the Renewable Energy output from the Facility up to the Point of Delivery, and Purchaser shall be deemed to be in control of Purchaser's Contract Capacity Share of such Renewable Energy output from and after the Point of Delivery. Title and risk of loss related to the Renewable Energy delivered by Seller to Purchaser hereunder shall transfer from Seller to Purchaser at the Point of Delivery.

7.4 Curtailments.

[redacted]

[redacted]

[redacted]

7.5 Reductions for Curtailments.

(A) In the event of a Reliability Curtailment, Force Majeure event, a Forced Outage, a Schedule Outage/Derating or other planned or unplanned outage of the Facility, Seller shall allocate the curtailment ratably among purchasers of Facility output, by delivering to Purchaser its Contract Capacity Share of the non-curtailed level of output.

(B) During periods of Economic Curtailment by Purchaser, (i) Purchaser's Contract Capacity Share shall be reduced to zero (0), (ii) Seller shall curtail operation of Wind Turbine capacity representing a percentage of the Facility Capacity most closely corresponding to the portion of Purchaser's Contract Capacity Share of Facility Capacity, and (iii) Seller may continue to operate the Uncommitted Capacity.

(C) During periods of a curtailment comparable to an Economic Curtailment of a portion of the output of the Facility by Seller, with respect to Seller's Merchant Capacity, or required by a Third Party Purchaser under its Third Party Power Purchase Agreement, to the extent Seller curtails output from the Facility as a result of such curtailment, the Contract Capacity Share shall be increased to an amount determined by removing such curtailed amount from the Facility Capacity for purposes of calculating the Contract Capacity Share for such period, and (ii) Seller shall, with respect to Seller's Merchant Capacity, and to the extent it is required to do so under such Third Party Purchaser Power Purchase Agreement, curtail operating Wind

Turbines with an aggregate capacity representing a percentage of the Facility Capacity most closely corresponding to the portion of the Facility Capacity that Seller would have received from Seller's Merchant Capacity, and that such Third Party Purchaser would have been entitled to receive under its Third Party Power Purchase Agreement, in the absence of such required curtailment.

7.6 Tax Benefits. If, for any reason, Seller does not receive the (i) investment tax credits or any other federal or state tax credits, deductions, or exemptions applicable to Seller or any of its Affiliates based on its ownership or operation of the Facility or on the production and sale of Renewable Energy Products to the Purchaser, or (ii) federal or state cash payments or outright grants of money relating to the ownership, development, construction, expansion, operation, maintenance or financing of the Facility, the cost of Renewable Energy Products delivered to Purchaser under this REPA shall not be affected, and the risk of not obtaining such tax credits or other benefits or incentives shall be borne solely by Seller.

ARTICLE 8
PAYMENT CALCULATIONS

[redacted]

ARTICLE 9
BILLING AND PAYMENT

9.1 Billing Invoices.

The monthly billing period shall be the calendar month. No later than ten (10) Business Days after the end of each calendar month, Seller shall provide to Purchaser, by first-class mail or electronically, an invoice for the amount due Seller by Purchaser for the services provided by Seller and purchased by Purchaser, under this REPA, during the previous calendar month billing period, including PJM charges and credits pursuant to Section 5.6. Seller's invoice will show all billing parameters, Contract Rates and factors, and any other data reasonably pertinent to the calculation of monthly payments due to Seller. Seller's failure to timely provide Purchaser with the monthly invoice shall not waive Purchaser's responsibility for payment under the terms stated in Section 9.2 below, except as provided in Section 13.9(B).

9.2 Payments.

Unless otherwise specified herein, payments due under this REPA shall be due and payable on or before the later of (i) the twentieth (20th) Day of the month following the month to which such payment relates and (ii) the tenth (10th) Business Day following receipt of the billing invoice. Unless Seller directs Purchaser otherwise, all payments by Purchaser to Seller shall be made by electronic funds transfer. If the amount due is not paid on or before the due date, a late payment charge shall be applied to the unpaid balance and shall be added to the next billing statement. Such late payment charge shall be calculated using an annual interest rate equal to the prime lending rate as may from time to time be published in *The Wall Street Journal* under "Money Rates" on such Day (or if not published on such day on the most recent preceding Day on which published) (or if generally unavailable, any other basis mutually agreed to by the Parties), plus two percent (2%). If the due date occurs on a Day that is not a Business Day, the late payment charge shall begin to accrue on the next succeeding Business Day.

9.3 Billing Disputes.

Purchaser may dispute invoiced amounts, but shall pay to Seller the undisputed portion of invoiced amounts on or before the invoice due date. To resolve any billing dispute, the Parties shall use the procedures set forth in Section 13.9. When the billing dispute is resolved, the Party owing shall pay the amount owed within five (5) Business Days of the date of such resolution, with late payment interest charges calculated on the amount owed in accordance with the provisions of Section 9.2 from the date such amount was originally due. Purchaser and Seller at any time may offset against any and all amounts that may be due and owed to the other Party under this REPA any amounts that are owed by such other Party to Purchaser or Seller, as applicable, pursuant to this REPA including damages and other payments. Undisputed and non-offset portions of amounts invoiced under this REPA shall be paid on or before the due date or shall be subject to the late payment interest charges set forth in Section 9.2.

ARTICLE 10
OPERATIONS AND MAINTENANCE

10.1 Facility Operation.

Seller shall staff, control, and operate the Facility consistent at all times with Good Utility Practice(s) and the Contract Administration Procedures developed pursuant to Section 10.3. Personnel capable of starting, operating, and stopping the Facility shall be available, either at the Facility or capable of remotely starting and stopping the Facility within no more than fifteen (15) minutes after Seller's receipt of notice of the beginning or end of any curtailment. In all cases, personnel capable of starting, operating, and stopping the Facility shall be continuously reachable by phone or pager. Seller shall maintain the Communications Equipment in good operating order at all times during the Term.

10.2 Outage and Performance Reporting.

(A) Seller shall comply with all NERC, RFC and the Transmission Operator generating unit outage and performance reporting requirements, as they may be revised from time to time, and as they apply to the Facility.

(B) When Forced Outages of ten percent (10%) or greater of the Wind Turbines that are part of the Facility occur, Seller shall notify Purchaser of the existence, nature, and expected duration of the Forced Outage as soon as practical, but in no event later than (i) thirty (30) minutes after the Forced Outage occurs if it occurs during normal business hours or (ii) the beginning of normal business hours if such Forced Outage occurs outside of normal business hours. Seller shall thereafter inform Purchaser of changes in the expected duration of the Forced Outage unless relieved of this obligation by Purchaser for the duration of each Forced Outage.

(C) Seller shall provide Purchaser with prompt notice of any malfunction or other failure of the Communications Equipment.

10.3 Contract Administration Committee and Contract Administration Procedures.

(A) Purchaser and Seller shall each appoint one representative and one alternate representative to act in matters relating to the Parties' performance obligations under this REPA and to develop operating arrangements for the generation, delivery and receipt of Renewable Energy hereunder. Such representatives shall constitute the Contract Administration Committee, and shall be as specified on Exhibit D. The Parties shall notify each other in writing of such appointments and any changes thereto. The Contract Administration Committee shall have no authority to modify the terms or conditions of this REPA.

(B) Prior to the Commercial Operation Date, the Contract Administration Committee shall develop mutually agreeable written Contract Administration Procedures which shall include, but not be limited to, method of day-to-day communications; metering, telemetering, telecommunications, and data acquisition procedures; key personnel list for applicable Purchaser and Seller operating centers; operations and maintenance scheduling and reporting; Renewable Energy reports; unit operations log; and such other matters as may be mutually agreed upon by the Parties.

10.4 Access to Facility.

Appropriate representatives of Purchaser shall at all reasonable times, including weekends and nights, and with reasonable prior notice, have access to the Facility to read meters, to perform maintenance and service of Purchaser's equipment and to perform all inspections and operational reviews as may be reasonably appropriate to facilitate the performance of this REPA. Purchaser will not interfere in any material respect with the operation of the Facility, and will cause all persons visiting the Facility on its behalf to comply with all of Seller's applicable safety, health and similar rules and requirements.

10.5 Reliability Standards. Seller shall operate the Facility in a manner that complies with all national and regional reliability standards, including standards set by the Transmission Operator, RFC, NERC and the FERC, or any successor agencies setting reliability standards for the operation of generation facilities. To the extent that Seller does not operate the Facility in accordance with such standards that result in monetary penalties being assessed to Purchaser by the Transmission Operator, RFC, NERC, or the FERC, Seller shall reimburse Purchaser for its share of such monetary penalties.

10.6 Beneficial Environmental Interests.

The Parties acknowledge that future and or existing legislation or regulation may create value in the ownership, use or allocation of the Beneficial Environmental Interests of the Facility. Purchaser shall own or be entitled to claim Purchaser's Contract Capacity Share of all Beneficial Environmental Interests to the extent they may exist during the Term.

10.7 Availability Reporting.

(A) On the first Business Day of each month commencing after the Commercial Operation Date, Seller will furnish Purchaser with a notice setting forth its good faith estimate of (i) the hourly availabilities of the Facility for such month and the next month and (ii) the expected average daily availability of the Facility for each of the ten (10) months subsequent to such next month. With respect to the preceding clause (A)(i), if Seller later updates its availability estimates for such periods, it shall deliver to Purchaser a revised notice setting forth its then current good faith estimate of hourly availabilities of the Facility for the balance of such month and for the next month. Seller does not guarantee the accuracy of said notices and said notices are only intended to be its good faith estimate of the projected availability of the Facility at the time such notice is given.

(B) Seller shall furnish to Purchaser a notice substantially in the form attached hereto as Exhibit K (an "Availability Notice") at or before 9:00 a.m. EPT on the Business Day immediately prior to the first Day to which such Availability Notice shall relate that shall set forth the Facility Capacity that Seller anticipates will actually be available in each hour through the next Business Day and each subsequent Business Day to which such Availability Notice relates. Seller also shall furnish to Purchaser a revised Availability Notice promptly after the occurrence of any Force Majeure event, Forced Outage, unscheduled outage or other unplanned maintenance, derating, or other event that would reduce or interrupt Renewable Energy or Ancillary Services associated with Purchaser's Contract Capacity Share of Facility Capacity or cause the controlling Availability Notice to be inaccurate or incomplete in any material respect, with a description of the circumstances thereof. Each such Availability Notice shall be effective until delivery of a subsequent Availability Notice. Seller does not guarantee the accuracy of said Availability Notices, and said Availability Notices are only intended to be its good faith estimate of the projected availability of the Facility at the time such notice is given.

10.8 Planned Maintenance Schedule.

No later than (a) fourteen (14) Days after the execution of this REPA and (b) two months prior to each calendar year thereafter during the Term, Seller shall submit to Purchaser a schedule of planned maintenance for the following calendar year for the Facility, which schedule shall be updated by Seller by each March 31 and September 30 thereafter to cover the twelve month period following each such update. Such schedule shall be consistent with the requirements of Good Utility Practice and the Interconnection Agreement, and otherwise in accordance with this REPA. No planned maintenance of the Facility substation or any other portion of the Facility that would affect the availability of more than 10% of the Facility Capacity at any one time may be scheduled during the period June, July, and August during any Contract Year during the Delivery Period; provided, however, that planned maintenance may be scheduled during such period to the extent (i) required by or necessary to preserve any equipment warranties or (ii) the failure to perform such planned maintenance is contrary to operation in accordance with Good Utility Practice(s). Such schedule, and each supplement thereto, shall indicate the planned commencement and completion dates for each planned maintenance during the period covered thereby, as well as the affected portion(s) of the Facility. If Purchaser desires to change the scheduled commencement or duration of planned maintenance, the Purchaser shall notify the Seller of the requested change and the Seller shall use reasonable efforts to accommodate the requested change. At least one (1) week prior to any planned maintenance, Seller shall telephonically notify Purchaser of the expected commencement date of such planned maintenance, the affected portion(s) of the Facility during such planned maintenance and the expected completion date of such planned maintenance. As soon as practicable, all such telephonic notification shall be confirmed in writing.

10.9 Certification of RECs.

(A) Seller shall be responsible for causing the GATS Certificates delivered under this REPA to meet all requirements for entry into GATS and as otherwise specified by the PJM-EIS. Seller shall be responsible for registering and maintaining compliance during the duration of this REPA with GATS and the PJM-EIS and will be responsible for timely delivery as allowed by GATS and the PJM-EIS. The Parties will effectuate the delivery and receipt of the GATS certificates by making and confirming appropriate entries into GATS and otherwise as specified by the PJM-EIS.

(B) Seller shall, at its own cost, take all actions necessary to register for and maintain participation in any applicable system or program established by the federal Governmental Authority or the State of Kentucky to monitor, track, certify or trade RECs or Renewable Energy certificates. To the extent necessary, Seller shall assign to Purchaser all rights, title and authority for Purchaser to register, own, hold and manage certificates that represent RECs respecting Renewable Energy in Purchaser's own name and to Purchaser's account, including any rights associated with any renewable energy information or tracking system that may be established with regard to monitoring, tracking, certifying, or trading such RECs or Renewable Energy certificates.

Upon the request of Purchaser from time to time, at no cost to Purchaser, (i) Seller shall deliver or cause to be delivered to Purchaser such attestations/certifications of RECs as may be required to comply with any certification system or program, and (ii) Seller shall provide full cooperation in connection with Purchaser's registration and certification of RECs or Renewable Energy certificates.

10.10 Public Statements/Other Use.

Without the written consent of Purchaser, Seller shall not (1) make any public statements or representations with respect to the Renewable Energy Products (or any portion thereof) inconsistent with the provisions of this REPA, (2) use the Purchaser's Contract Capacity Share of the Facility's Beneficial Environmental Interests to meet any federal, state or local renewable energy requirement, renewable energy procurement, renewable energy portfolio standard or other renewable energy mandate or (3) advertise, market, sell, retire, convey or otherwise transfer or seek to transfer the Purchaser's Contract Capacity Share of the Facility's Beneficial Environmental Interests, which rights are expressly reserved to Purchaser during the Term of this REPA.

10.11 Real-Time Information.

Seller will use commercially reasonable efforts on and after the later to occur of (1) the Contract Start Date and (2) the Commercial Operation Date to continuously transmit real-time data to Purchaser in compliance with Exhibit H. Purchaser and Seller shall each bear the cost of and responsibilities for their respective systems, equipment and communications links required for receipt of such real-time information.

10.12 Web-Based Operational Reporting.

Purchaser may at its option make available to Seller on the Internet a web-based reporting system which will provide the Parties with the capability to generate and submit standardized reports for purposes of satisfying the requirements of the Parties contained in Sections 10.2, 10.7 and 10.8. Purchaser will develop user requirements for such reporting system in consultation with Seller.

ARTICLE 11
SECURITY FOR PERFORMANCE

11.1 Seller Security Fund.

(A) Seller shall establish, fund, and maintain a Seller Security Fund, pursuant to the provisions of this Article 11, which shall be available to pay any amount due Purchaser pursuant to this REPA. The Seller Security Fund shall also provide security to Purchaser to cover (i) Delay Damages, should the Facility fail to achieve the Commercial Operation Date by the Commercial Operation Milestone; [redacted]; and (iii) other amounts or damages that Purchaser may be entitled to recover hereunder as the result of an Event of Default by Seller under this REPA. Seller shall establish, and maintain throughout the Term, the Seller Security Fund at an [redacted]

[redacted] than ten (10) Business Days after the date that all of the Seller's conditions precedent set forth in Section 6.2 have either been satisfied or waived.

(B) In addition to any other remedy available to it, Purchaser may, before or after termination of this REPA, draw from the Seller Security Fund such amounts as are necessary to recover amounts Purchaser is owed pursuant to this REPA, including any damages due to Purchaser and any amounts for which Purchaser is entitled to indemnification under this REPA, but only in the event such amounts have not been paid within five (5) Business Days of a written request therefor presented to Seller. Purchaser may, in its sole discretion, draw all or any part of such amounts due to it from any form of security to the extent available pursuant to this Section 11.1(B), and from all such forms, and in any sequence Purchaser may select. Any failure to draw upon the Seller Security Fund or other security for any damages or other amounts due to Purchaser shall not prejudice Purchaser's rights to recover such damages or amounts in any other manner.

(C) The Seller Security Fund shall be maintained at Seller's expense, shall be issued by or deposited in an Issuer, and shall be in the form of one or more of the following instruments. Seller may change the form of the Seller Security Fund at any time and from time to time upon reasonable prior notice to Purchaser, but the Seller Security Fund must at all times be comprised of one or any combination of the following:

(1) An irrevocable standby letter of credit, in form and substance reasonably acceptable to Purchaser, from an Issuer with a senior unsecured debt rating equivalent to A- (S&P) or A3 (Moody's) or better as determined by at least two (2) rating agencies, one of which must be either Standard & Poor's or Moody's (or if either one or both are not available, equivalent ratings from alternate rating sources acceptable to Purchaser). In addition, if such senior unsecured debt rating of the Issuer is exactly equivalent to A-/A3, the Issuer must not be on credit watch by a rating agency. Security provided in this form shall be consistent with this REPA and include a provision for at least thirty (30) Days advance notice to Purchaser of any non-renewal, expiration or earlier termination of the security so as to allow Purchaser sufficient time to exercise its rights under said security if Seller fails to extend or replace the security. The form of such security must meet Purchaser's requirements to ensure that claims or draw-downs can be made unilaterally by Purchaser in accordance with the terms of this REPA. Such security must be issued for a minimum term of three hundred and sixty (360) Days. Seller shall cause the renewal or extension of the security for additional consecutive terms of three hundred and sixty (360) Days or more (or, if shorter, the remainder of the Term of this REPA) no later than thirty (30) Days prior to each expiration date of the security. If the security is not renewed or extended as required herein, Purchaser shall have the right to draw immediately upon the security and be entitled to hold the amounts so drawn as security, provided Purchaser satisfies the conditions of Section 11.1(C)(2)(i). If Purchaser does not meet the conditions of Section 11.1(C)(2)(i), Purchaser will place the amounts so drawn, in an interest bearing escrow account in accordance with Section 11.1(C)(2)(ii), until and unless, upon return to Seller of such security, Seller provides a substitute form of such security meeting the requirements of this Article. Security in the form of an

irrevocable standby letter of credit shall be governed by the Uniform Customs and Practice for Documentary Credits (2007 Revision), International Chamber of Commerce Brochure No. 600.

(2) United States currency ("Cash"), deposited (i) with Purchaser provided that Purchaser satisfies the following conditions: (a) it is not a defaulting party, and (b) Purchaser has a senior unsecured debt rating from Standard and Poor's of at least BBB- and from Moody's of at least Baa3. Purchaser will pay interest to Seller on Cash held at the Federal Funds Effective Rate; or (ii) if, and only if, Purchaser does not meet the aforementioned conditions of Section 11.1(C)(2)(i), then the Cash shall be held with Issuer, either: (a) in an account under which Purchaser is designated as beneficiary with sole authority to draft from the account or otherwise access the security; or (b) held by Issuer as escrow agent with instructions to pay claims made by Purchaser pursuant to this REPA, such instructions to be in a form reasonably satisfactory to Purchaser. Security held pursuant to Section 11.1(C)(2)(ii) shall be subject to the following: (x) include a requirement for immediate notice to Purchaser from Issuer and Seller in the event that the sums held as security in the account or trust do not at any time meet the required level for the Seller Security Fund as set forth in this Section 11.1, (y) funds held in the account may be deposited in a money-market fund, short-term treasury obligations, investment-grade commercial paper and other liquid investment-grade investments with maturities of three months or less, with all investment income thereon to be taxable to, and to accrue for the benefit of, Seller, and (z) after the Commercial Operation Date is achieved, annual account sweeps for recovery of interest earned by the Seller Security Fund shall be allowed by Seller. Seller grants to Purchaser a present and continuing first priority security interest in all Cash which has been transferred to Purchaser or held by Issuer. At such times as the balance of Cash held by Purchaser or by Issuer exceeds the amount of Seller's obligation to provide security hereunder, Purchaser shall remit to Seller on demand any excess in the account above Seller's obligations.

[redacted]

(D) If the Issuer of the Seller Security Fund no longer satisfies the requirements of Section 11.1(C), Seller shall provide replacement security satisfying the requirements of Section 11.1(C) no later than fifteen (15) Days after receiving notice from Purchaser that such conversion of the Seller Security Fund instrument is required. Upon receipt of such replacement security, Purchaser shall promptly return to Seller of any of Seller Security Fund being replaced then held by Purchaser and the effectiveness of any such replacement security shall be conditioned upon such prompt return to Seller thereof. Seller may object to Purchaser's request for replacement security by delivering written notice to Purchaser within five (5) Business Days of receipt of Purchaser's written request for such replacement security, and in such event the dispute resolution procedures contained in Exhibit L shall apply.

(E) Promptly following the end of the Term and the completion of all of Seller's obligations under this REPA, Purchaser shall release the Seller Security Fund (including any accumulated interest, if applicable) to Seller.

[redacted]

[redacted]

[redacted]

[redacted]

[redacted]

ARTICLE 12
DEFAULT AND REMEDIES

12.1 Events of Default. Any of the following shall constitute an "Event of Default":

(A) A failure by a Party to pay any amount due hereunder, where such failure is not cured within [redacted] after receipt of written notice of such failure;

(B) Either Party (or any Person providing credit support hereunder on behalf of such Party) has (a) commenced a voluntary case under any bankruptcy law, applied for or consented to the appointment of, or the taking of possession by, a receiver, trustee, assignee, custodian or liquidator of all or a substantial part of its assets, (b) failed, or admitted in writing its inability generally, to pay its debts as such debts become due, (c) made a general assignment for the benefit of creditors (except for an assignment to the Facility Debt Representative as security under the Financing Documents as permitted by this REPA), (d) been adjudicated bankrupt or has filed a petition or an answer seeking an arrangement with creditors, (e) taken advantage of any insolvency law or shall have submitted an answer admitting the material allegations of a petition in bankruptcy or insolvency proceeding, (f) become subject to an order, judgment or decree for relief, entered in an involuntary case, without the application, approval or consent of such Party by any court of competent jurisdiction appointing a receiver, trustee, assignee, custodian or liquidator, for a substantial part of any of its assets and such order, judgment or decree shall continue unstayed and in effect for any period of [redacted] (g) filed a voluntary petition in bankruptcy, (h) failed to remove an involuntary petition in bankruptcy filed against it within [redacted] of the filing thereof, or (i) become subject to an order for relief under the provisions of the United States Bankruptcy Act, 11 U.S.C. § 301;

(C) If Purchaser fails to provide the Purchaser Security Fund pursuant to Section 11.2, or replacement or substitute Purchaser Security Fund pursuant to Section 11.2, when required, or if Seller fails to provide the Seller Security Fund pursuant to Section 11.1, or replacement or substitute Seller Security Fund pursuant to Section 11.1, when required, and if the Party required to deliver such security fails to do so within five (5) calendar Days after receipt of written notice and demand therefor by the other Party, such failure shall constitute an Event of Default by the Party required to provide such security; or

(D) Any other breach of a material obligation under this REPA, other than as set forth in Section 12.1(A), (B), (C) and (E), if such default has not been cured by the defaulting Party within [redacted] after receiving written notice from the non-defaulting Party setting forth, in reasonable detail, the nature of such default and its impact on the non-defaulting Party; *provided, however,* that, in the case of any such default that is not reasonably capable of being cured within [redacted] period, the defaulting Party shall have additional time as necessary, not to exceed [redacted], to cure the default if it commences to cure the default within such [redacted] period and it diligently and continuously pursues such cure.

(E) Seller's failure to meet the Commercial Operation Milestone by the Delay Damages Commencement Date, where such failure is not cured within [redacted] after the date of written notice of such failure from Purchaser to Seller and the Facility Debt Representative as provided for in Section 13.1; provided, however, that Seller shall have an additional [redacted] period (together with the initial [redacted] period provided for above, a total of [redacted]) to achieve the Commercial Operation Date (and for such failure to constitute an Event of Default), provided that, on or before the expiration of the initial [redacted] period, an independent engineer, mutually agreed to by the Parties, retained by Purchaser and paid for by Seller, provides a written opinion to Purchaser stating that Seller's plan for achieving the Commercial Operation Date is reasonably achievable within such additional [redacted] period. The cure periods provided for in this Section 12.1(E) shall not in any manner reduce, increase or otherwise modify Seller's obligation to pay Delay Damages under Section 4.1, which Delay Damages shall continue accruing and shall expire as provided for in Section 4.1, notwithstanding the cure periods provided for in this Section 12.1(E).

[redacted]

[redacted]

12.2 Facility Lenders' Right to Cure Default of Seller.

Notwithstanding the foregoing provisions of Section 12.1, in the case of an Event of Default by Seller, Purchaser shall provide the Facility Debt Representative (if any) with notice of such Event of Default and the Facility Debt Representative shall have the right (but not the obligation) either to cure the Event of Default on behalf of Seller, or, upon payment to Purchaser of amounts due from Seller but not paid by Seller, to assume, or cause its designee or a lessee or purchaser of the Facility to assume, all of the rights and obligations of Seller under this REPA arising after the date of such assumption as more fully described in Section 19.2.

12.3 Non-Defaulting Party Rights. Upon the occurrence of an Event of Default by a Party, the non-defaulting Party shall have the following rights:

(A) To terminate this REPA pursuant to Section 12.5(A);

(B) To suspend performance of its obligations and duties hereunder immediately upon delivering written notice to the defaulting Party of its intent to exercise its suspension rights; and

(C) To pursue any other remedy given under this REPA or now or hereafter existing at law or in equity or otherwise.

12.4 Damages Prior to Termination.

[redacted] Each Party shall have the right to collect damages from the other Party arising from its breach of this REPA. Upon the occurrence of an Event of Default, the non-defaulting Party shall have the right to collect damages accruing prior to the termination of this REPA from the defaulting Party as set forth below, and the payment of any such damages accruing prior to the cure of an Event of Default shall constitute a part of the cure. For all Events of Default (other than Seller's failure to meet the Commercial Operation Milestone, for which Purchaser's sole and exclusive remedy shall be to collect Delay Damages pursuant to Section 4.1 and Seller's failure to achieve the Guaranteed Availability, for which Purchaser's sole and exclusive remedy shall be to collect Shortfall Liquidated Damages pursuant to Section 7.2), the non-defaulting Party shall be entitled to receive from the defaulting Party its damages resulting from such Event of Default. [redacted]

[redacted]

12.5 Termination.

(A) Upon the occurrence of an Event of Default which has not been cured within the applicable cure period, the non-defaulting Party shall have the right to declare a date, which date shall be no less than [redacted] and no more than [redacted] after the expiration of all applicable cure periods with respect to the Event of Default, upon which this REPA shall terminate. Neither Party shall have the right to terminate this REPA except as provided for upon the occurrence of an Event of Default as described above or as otherwise may be explicitly provided for in this REPA. Upon the termination of this REPA under this Section 12.5, the non-defaulting Party shall be entitled to receive from the defaulting Party, all of the actual damages incurred by the non-defaulting Party in connection with such termination in accordance with Section 12.4. Such actual damages shall be calculated for the remainder of the Term (assuming the Term had continued without early termination) on a net present value basis in a commercially reasonable manner.

12.6 Specific Performance.

Each Party shall be entitled to seek a decree compelling specific performance with respect to, and shall be entitled, without the necessity of filing any bond, to seek the restraint by injunction of, any actual or threatened breach of any material obligation of the other Party under this REPA. The Parties in any action for specific performance or restraint by injunction agree that they shall each request that all expenses incurred in such proceeding, including, but not limited to, reasonable counsel fees, be apportioned in the final decision based upon the respective merits of the positions of the Parties.

12.7 Remedies Cumulative.

Subject to the exclusivity of Delay Damages provided in Section 4.1 and Shortfall Liquidated Damages provided in Section 7.2, the limitations on damages set forth in Section 12.8 and other limitations specified in this REPA, each right or remedy of the Parties provided for in this REPA shall be cumulative of and shall be in addition to every other right or remedy provided for in this REPA, and the exercise, or the beginning of the exercise, by a Party of any one or more or the rights or remedies provided for herein shall not preclude the simultaneous or later exercise by such Party of any or all other rights or remedies provided for herein.

12.8 Waiver and Exclusion of Other Damages.

The Parties confirm that the express remedies and measures of damages provided in this REPA satisfy the essential purposes hereof. If no remedy or measure of damages is expressly herein provided, the obligor's liability shall be limited to direct, actual damages only. EXCEPT AS MAY BE INCLUDED IN ANY CALCULATION OF LIQUIDATED DAMAGES, TOTAL REPLACEMENT ENERGY COSTS OR RESALE COSTS, NEITHER PARTY SHALL BE LIABLE TO THE OTHER PARTY FOR CONSEQUENTIAL, INCIDENTAL, PUNITIVE, EXEMPLARY OR INDIRECT DAMAGES, LOST PROFITS OR OTHER BUSINESS INTERRUPTION DAMAGES BY STATUTE, IN TORT OR CONTRACT (EXCEPT TO THE EXTENT EXPRESSLY PROVIDED HEREIN); PROVIDED, THAT IF EITHER PARTY IS HELD LIABLE TO A THIRD PARTY FOR SUCH DAMAGES AND THE PARTY HELD LIABLE FOR SUCH DAMAGES IS ENTITLED TO INDEMNIFICATION THEREFORE FROM THE OTHER PARTY HERETO, THE INDEMNIFYING PARTY SHALL BE LIABLE FOR, AND OBLIGATED TO REIMBURSE THE INDEMNIFIED PARTY FOR, SUCH DAMAGES; PROVIDED, FURTHER THAT LOSS OF BENEFICIAL ENVIRONMENTAL INTERESTS SHALL NOT BE CONSIDERED CONSEQUENTIAL DAMAGES. To the extent any damages required to be paid hereunder are liquidated, the Parties acknowledge that the damages are difficult or impossible to determine, that otherwise obtaining an adequate remedy is inconvenient, and that the liquidated damages constitute a reasonable approximation of the harm or loss.

12.9 Payment of Damages.

Without limiting any other provisions of this Article 12 and at any time before or after termination of this REPA, the non-defaulting Party may send the other Party an invoice for such damages (including, if applicable, Delay Damages) or other amounts as are due to the non-defaulting Party at such time from the defaulting Party under this REPA and such invoice shall be payable in the manner, and in accordance with the applicable provisions, set forth in Article 9, including the provision for late payment charges. In the case of damages owed by Seller to Purchaser, Purchaser may, subject to the provisions of Section 11.1, withdraw funds from the Seller Security Fund, as needed to provide payment for such invoice if the invoice is not paid by Seller on or before the [redacted] following the invoice due date. [redacted]

12.10 Duty to Mitigate.

Each Party agrees that it has a duty to mitigate damages and covenants that it will use commercially reasonable efforts to minimize any damages it may incur as a result of the other Party's performance or non-performance of the REPA.

ARTICLE 13
CONTRACT ADMINISTRATION AND NOTICES

13.1 Notices in Writing.

Notices required by this REPA shall be addressed to the other Party, including the other Party's representative on the Contract Administration Committee, at the addresses noted in Exhibit D as either Party updates them from time to time by written notice to the other Party. Any notice, request, consent, or other communication required or authorized under this REPA to be given by one Party to the other Party shall be in writing. It shall either be hand delivered or mailed, postage prepaid, to the representative of said other Party. If mailed, the notice, request, consent or other communication shall be simultaneously sent by facsimile or other electronic means. Any such notice, request, consent, or other communication shall be deemed to have been received by the Close of the Business Day on which it was hand delivered or transmitted electronically (unless hand delivered or transmitted after such close in which case it shall be deemed received at the close of the next Business Day). Real-time or routine communications concerning Facility operations shall be exempt from this Section.

13.2 Representative for Notices.

Each Party shall maintain a designated representative to receive notices. Such representative may, at the option of each Party, be the same person as that Party's representative or alternate representative on the Contract Administration Committee, or a different person. Either Party may, by written notice to the other Party, change the representative or the address to which such notices and communications are to be sent.

13.3 Authority of Representatives.

The Parties' representatives designated above shall have authority to act for its respective principals in all technical matters relating to performance of this REPA and to attempt to resolve disputes or potential disputes. However, they, in their capacity as representatives, shall not have the authority to amend or modify any provision of this REPA.

13.4 Operating Records.

Seller and Purchaser shall each keep complete and accurate records and all other data required by each of them for the purposes of proper administration of this REPA, including such records as may be required by state or federal regulatory authorities and the Transmission Operator in the prescribed format.

13.5 Operating Log.

Seller shall maintain an accurate and up-to-date operating log, in electronic format, at the Facility with records of production for each Clock Hour; changes in operating status; Scheduled Outages/Deratings and Forced Outages for the purposes

of proper administration of this REPA, including such records as may be required by state or federal regulatory authorities and the Transmission Operator in the prescribed format.

13.6 Billing and Payment Records.

To facilitate payment and verification, Seller and Purchaser shall keep all books and records necessary for billing and payments in accordance with the provisions of Article 9 and grant the other Party reasonable access to those records. All records of Seller pertaining to the operation of a Facility shall be maintained on the premises of the Facility. For audit and verification purposes, Seller will grant Purchaser read-only access to the PJM eSuite accounts for the node associated with the PJM charges and credits for the Renewable Energy Products from Purchaser's Contract Capacity Share of the Facility Capacity.

13.7 Examination of Records.

Seller and Purchaser may examine the financial and Operating Records and data kept by the other Party relating to transactions under and administration of this REPA, at any time during the period the records are required to be maintained, upon request and during normal business hours.

13.8 Exhibits.

Either Party may change the information for their notice addresses in Exhibit D at any time upon written notice to but without the approval of the other Party. Exhibit C may only be changed in accordance with Section 20.4. Exhibit E may be changed in accordance with Section 16.2(B). All other Exhibits may only be modified by the mutual agreement of Seller and Purchaser.

13.9 Dispute Resolution.

(A) Except as otherwise expressly provided in this REPA, in the event of any dispute, controversy or claim arising under this REPA (a "Dispute"), within ten (10) Days following the delivered date of a written request by either Party (a "Dispute Notice"), (i) each Party shall appoint a representative (individually, a "Party Representative", together, the "Parties' Representatives"), and (ii) the Parties' Representatives shall meet, negotiate and attempt in good faith to resolve the Dispute quickly, informally and inexpensively. In the event the Parties' Representatives cannot resolve the Dispute within thirty (30) Days after commencement of negotiations, within ten (10) Days following any request by either Party at any time thereafter, each Party Representative (I) shall independently prepare a written summary of the Dispute describing the issues and claims, (II) shall exchange its summary with the summary of the Dispute prepared by the other Party Representative, and (III) shall submit a copy of both summaries to a senior officer of the Party Representative's Party with authority to irrevocably bind the Party to a resolution of the Dispute. Within ten (10) Business Days after receipt of the Dispute summaries, the senior officers for both Parties shall negotiate in good faith to resolve the Dispute. If the Parties are unable to resolve the

Dispute within fourteen (14) Days following receipt of the Dispute summaries by the senior officers, either Party may seek available legal remedies.

(B) Seller and Purchaser each hereby knowingly, voluntarily and intentionally waive any rights they may have to a trial by jury in respect of any litigation based hereon, or arising out of, under, or in connection with, this REPA or any course of conduct, course of dealing, statements (whether oral or written) or actions of Seller and Purchaser related hereto and expressly agree to have any disputes arising under or in connection with this REPA be adjudicated by a judge of the court having jurisdiction without a jury.

ARTICLE 14
FORCE MAJEURE

14.1 Definition of Force Majeure.

(A) The term "Force Majeure", as used in this REPA, means any event which wholly or partly prevents or delays the performance of any obligation arising under this REPA, but only if and to the extent (i) such event is not within the reasonable control, directly or indirectly, of the Party affected, (ii) such event, despite the exercise of reasonable diligence, cannot be prevented, avoided or overcome by such Party, (iii) the Party affected has taken all reasonable precautions and measures pursuant to Good Utility Practices in order to avoid the effect of such event on such Party's ability to perform its obligations under this REPA and to mitigate the consequences thereof, and (iv) such event is not the direct or indirect result of a Party's negligence or the failure of such Party to perform any of its obligations under this REPA or to comply with Applicable Law. A Force Majeure Event may include, but is not limited to, any of the following (but only if and to the extent such event meets the requirements of (i) – (iv) above): (a) acts of God or the public enemy, war, whether declared or not, blockade, insurrection, riot, civil disturbance, public disorders, rebellion, violent demonstrations, revolution, sabotage or terrorist action; (b) any effect of unusual natural elements, including fire, subsidence, earthquakes, floods, lightning, tornadoes, unusually severe storms, or similar cataclysmic occurrence or other unusual natural calamities; (c) environmental and other contamination at or affecting the Facility; (d) explosion, accident or epidemic; (e) governmental action or inaction; (f) general strikes, lockouts or other collective or industrial action by workers or employees, or other labor difficulties; (g) the unavailability of labor, fuel, power or raw materials, the breakdown of the Facility or other plant breakdown or equipment failure, and any event affecting the ability of any supplier (including under any engineering, procurement or construction agreement for the Facility) to the Facility to fulfill its obligations to Seller and the Facility so long as, in each case, the cause thereof otherwise would qualify as a Force Majeure; (h) accidents of navigation or breakdown or injury of vessels, accidents to harbors, docks, canals or other assistances to or adjuncts of shipping or navigation, or quarantine; (i) nuclear emergency, radioactive contamination or ionizing radiation or the release of any hazardous waste or materials; and (j) air crash, shipwreck, train wrecks or other failures or delays of transportation; *provided, however*, that the lack of money,

changes in market conditions, and those items expressly excluded in Section 14.1(B), below, shall not constitute a Force Majeure.

(B) The term Force Majeure does not include the inability or failure of Purchaser to obtain transmission service and the unavailability, interruption or curtailment of transmission service, all of which are expressly addressed under other provisions of this REPA.

14.2 Applicability of Force Majeure.

(A) Other than as set forth in Section 14.3, neither Party shall be responsible or liable for any delay or failure in its performance under this REPA, nor shall any delay, failure, or other occurrence or event become an Event of Default, to the extent such delay, failure, occurrence or event is substantially caused by conditions or events of Force Majeure, provided that:

(1) the non-performing Party gives the other Party prompt written notice describing the particulars of the occurrence of the Force Majeure;

(2) the suspension of performance is of no greater scope and of no longer duration than is required by the Force Majeure;

(3) the non-performing Party proceeds with reasonable diligence to remedy its inability to perform and provides weekly progress reports to the other Party describing actions taken to end the Force Majeure; and

(4) when the non-performing Party is able to resume performance of its obligations under this REPA, that Party shall give the other Party prompt written notice to that effect.

(B) Except as otherwise expressly provided for in this REPA, the existence of a condition or event of Force Majeure shall not relieve the Parties of their obligations under this REPA (including payment obligations) to the extent that performance of such obligations is not precluded by the condition or event of Force Majeure.

14.3 Limitations on Effect of Force Majeure.

In no event will any delay or failure of performance caused by any conditions or events of Force Majeure extend this REPA beyond its stated Term. In the event that any delay or failure of performance caused by conditions or events of Force Majeure prevents the performance of a Party's obligations hereunder in any material respect and continues for an uninterrupted period of [redacted] from its occurrence or inception, as noticed pursuant to Section 14.2(A), the Party not claiming Force Majeure may, at any time following the end of such [redacted] period, terminate this REPA upon written notice to the affected Party, without further obligation by either Party except as to costs and balances incurred prior to the effective date of such termination. The Party not claiming Force Majeure may, but shall

not be obligated to, extend such [redacted] period, for such additional time as it, at its sole discretion, deems appropriate, if the affected Party is exercising due diligence in its efforts to cure the conditions or events of Force Majeure.

ARTICLE 15
REPRESENTATIONS, WARRANTIES AND COVENANTS

15.1 Seller's Representations, Warranties and Covenants.

Seller hereby represents and warrants as follows as of the date hereof:

(A) Seller is a limited liability company duly organized, validly existing and in good standing under the laws of the State of Delaware. Seller is qualified to do business in each other jurisdiction where the failure to so qualify would have a material adverse effect on the business or financial condition of Seller; and Seller has all requisite power and authority to conduct its business, to own its assets, and to execute, deliver, and perform its obligations under this REPA.

(B) The execution, delivery, and performance of its obligations under this REPA by Seller have been duly authorized by all necessary limited liability company action, and do not and will not

(1) violate any provision of law, rule, regulation, order, writ, judgment, injunction, decree, determination, or award currently in effect having applicability to Seller or violate any provision in any formation documents of Seller, the violation of which could have a material adverse effect on the ability of Seller to perform its obligations under this REPA;

(2) result in a breach or constitute a default under Seller's formation documents or bylaws, or under any agreement relating to the management or affairs of Seller or any indenture or loan or credit agreement, or any other agreement, lease, or instrument to which Seller is a party or by which Seller or its assets may be bound or affected, the breach or default of which could reasonably be expected to have a material adverse effect on the ability of Seller to perform its obligations under this REPA; or

(3) result in, or require the creation or imposition of any mortgage, deed of trust, pledge, lien, security interest, or other charge or encumbrance of any nature (other than as may be contemplated by this REPA) upon or with respect to any of the assets of Seller now owned or hereafter acquired, the creation or imposition of which could reasonably be expected to have a material adverse effect on the ability of Seller to perform its obligations under this REPA.

(C) This REPA is a valid and binding obligation of Seller.

(D) The execution and performance of this REPA will not conflict with or constitute a breach or default under any contract or agreement of any kind to

which Seller is a party or any judgment, order, statute, or regulation that is applicable to Seller or the Facility.

(E) To the knowledge of Seller, all permits, consents, approvals, licenses, authorizations, or other action required by any Governmental Authority to authorize Seller's execution, delivery and performance of this REPA have been duly obtained and are in full force and effect.

15.2 Purchaser's Representations, Warranties and Covenants.

Purchaser hereby represents and warrants as follows as of the date hereof:

(A) Purchaser is a corporation duly organized, validly existing and in good standing under the laws of the State of Kentucky and is qualified in each other jurisdiction where the failure to so qualify would have a material adverse effect upon the business or financial condition of Purchaser; and Purchaser has all requisite power and authority to conduct its business, to own its properties, and to execute, deliver, and perform its obligations under this REPA.

(B) The execution, delivery, and performance of its obligations under this REPA by Purchaser have been duly authorized by all necessary corporate action, and do not and will not:

(1) require any consent or approval of Purchaser's Board of Directors, or shareholders, other than that which has been obtained and is in full force and effect (evidence of which shall be delivered to Seller upon its request);

(2) violate any provision of law, rule, regulation, order, writ, judgment, injunction, decree, determination, or award currently in effect having applicability to Purchaser or violate any provision in any corporate documents of Purchaser, the violation of which could have a material adverse effect on the ability of Purchaser to perform its obligations under this REPA;

(3) result in a breach or constitute a default under Purchaser's corporate charter or bylaws, or under any agreement relating to the management or affairs of Purchaser, or any indenture or loan or credit agreement, or any other agreement, lease, or instrument to which Purchaser is a party or by which Purchaser or its properties or assets may be bound or affected, the breach or default of which could reasonably be expected to have a material adverse effect on the ability of Purchaser to perform its obligations under this REPA; or

(4) result in, or require the creation or imposition of, any mortgage, deed of trust, pledge, lien, security interest, or other charge or encumbrance of any nature (other than as may be contemplated by this REPA) upon or with respect to any of the assets or properties of Purchaser now owned or hereafter acquired, the creation or imposition of which could reasonably be expected to have a material adverse effect on the ability of Purchaser to perform its obligations under this REPA.

(C) This REPA is a valid and binding obligation of Purchaser.

(D) The execution and performance of this REPA will not conflict with or constitute a breach or default under any contract or agreement of any kind to which Purchaser is a party or any judgment, order, statute, or regulation that is applicable to Purchaser.

[redacted]

ARTICLE 16
INSURANCE

16.1 Evidence of Insurance.

Within ten (10) days following execution of this REPA, and as soon as practicable after the end of each fiscal year or at the renewal of the insurance policy and in any event within thirty (30) days thereafter, Seller shall provide Purchaser insurance certificates executed by each insurer or by an authorized representative of each insurer evidencing that insurance coverages for the Facility are in compliance with the specifications for insurance coverage set forth in Exhibit E to this REPA. Such certificates shall (a) name Purchaser as an additional insured on all policies required (except worker's compensation and employer's liability); (b) [redacted] (c) provide a waiver of any rights of subrogation against Purchaser, its Affiliates and their officers, directors, agents, subcontractors, and employees; and (d) indicate that the Commercial General Liability policy has been endorsed as described above. All policies shall be procured and maintained through insurance companies licensed to do business as required by applicable law in the state where the Facility located and is rated [redacted]. All policies shall be primary as respects any claims, losses, damages, expenses or liabilities arising out of this REPA and insured hereunder, and any insurance carried by Purchaser shall be excess and noncontributing with insurance afforded by these policies. Seller's liability under this REPA is not limited to the amount of insurance coverage required herein.

16.2 Term and Modification of Insurance.

(A) All insurance required under this REPA shall cover occurrences during the Term and for a period of [redacted]. In the event that any insurance as required herein is commercially available only on a "claims-made" basis, such insurance shall provide for a retroactive date not later than the date of this REPA and such insurance shall be maintained by Seller, with a retroactive date

not later than the retroactive date required above, for a minimum of [redacted]

(B) If any insurance required to be maintained by Seller hereunder ceases to be reasonably available and commercially feasible in the commercial insurance market, Seller shall provide written notice to Purchaser, accompanied by a certificate from an independent insurance advisor of recognized national standing, certifying that such insurance is not reasonably available and commercially feasible in the commercial insurance market for electric generating plants of similar type, geographic location and design. Upon receipt of such notice, Purchaser shall not unreasonably withhold its consent to modify or waive such requirement.

ARTICLE 17
INDEMNITY

[redacted]

[redacted]

ARTICLE 18
LEGAL AND REGULATORY COMPLIANCE

(A) Each Party shall at all times comply with all laws, ordinances, rules, and regulations applicable to it, except for any non-compliance which, individually or in the aggregate, could not reasonably be expected to have a material effect on the business or financial condition of the Party or its ability to fulfill its commitments hereunder. As applicable, each Party shall give all required notices, shall procure and maintain all governmental permits, licenses, and inspections necessary for performance of this REPA, and shall pay its respective charges and fees in connection therewith.

(B) Each Party shall cooperate with the other Party in providing such information as may be reasonably requested, to the extent permitted by applicable law and subject to such confidentiality and use limitations as the providing Party may reasonably require, to the extent that the requesting Party requires the same in order to fulfill any regulatory reporting requirements, or to assist the requesting Party in litigation, including administrative proceedings before utility regulatory commissions.

(C) Upon permanent cessation of generation of Renewable Energy from the Facility, Seller shall decommission the Facility, remove the Facility and remediate the Site as, if and when required by law.

ARTICLE 19
ASSIGNMENT, SUBCONTRACTING, AND FINANCING

[redacted]

19.2 Accommodation of Facility Debt Representative.

Purchaser shall make reasonable efforts to provide such consents to assignments, certifications, representations, information or other documents as may be reasonably requested by Seller or the Facility Debt Representative in connection with the financing of the Facility, which shall include providing Facility Debt Representative with the protections contained in the form of Consent and Assignment attached hereto as Exhibit M (the "Consent and Agreement") and providing the Facility Debt Representative with an opinion of in-house counsel limited to enforceability, non-contravention and corporate housekeeping matters; provided, that in responding to any such request, Purchaser shall have no obligation to provide any consent or opinion, or enter into any agreement (other than as provided in the Consent and Assignment), that materially adversely affects any of Purchaser's rights, benefits, risks and/or obligations under this REPA. Seller shall reimburse, or shall cause the Facility Debt Representative to reimburse, Purchaser for the incremental direct expenses (including the reasonable

fees and expenses of counsel) incurred by Purchaser in the preparation, negotiation, execution and/or delivery of any documents requested by Seller or the Facility Debt Representative, and provided by Purchaser, pursuant to this Section 19.2.

19.3 Notice of Facility Debt Representative Action.

Within ten (10) Days following Seller's receipt of each written notice from the Facility Debt Representative of default, or Facility Debt Representative's intent to exercise any remedies, under the Financing Documents, Seller shall deliver a copy of such notice to Purchaser.

19.4 Transfer Without Consent is Null and Void.

Any sale, transfer, or assignment of this REPA made without fulfilling the requirements of the REPA shall be null and void and shall constitute an Event of Default pursuant to Article 12.

19.5 Subcontracting.

Seller may subcontract its duties or obligations under this REPA without the prior written consent of Purchaser, provided, that no such subcontract shall relieve Seller of any of its duties or obligations hereunder.

ARTICLE 20
MISCELLANEOUS

20.1 Waiver.

Subject to the provisions of Section 13.9(B), the failure of either Party to enforce or insist upon compliance with or strict performance of any of the terms or conditions of this REPA, or to take advantage of any of its rights there under, shall not constitute a waiver or relinquishment of any such terms, conditions, or rights, but the same shall be and remain at all times in full force and effect.

20.2 Taxes. Seller shall pay or cause to be paid (and shall indemnify and hold Purchaser harmless from and against) all sales, use, excise, ad valorem, transfer and other similar taxes, but excluding in all events taxes based on or measured by net income, that are imposed by any taxing authority (individually, a "Tax" and collectively, "Taxes") on or with respect to the sale of Energy incurred prior to the delivery of the Energy to the Point of Delivery. Purchaser shall pay or cause to be paid (and shall indemnify and hold Seller harmless from and against) all Taxes on or with respect to the sale of Energy incurred upon and after the delivery of Energy to the Point of Delivery and all Taxes associated with the Renewable Energy Credits. If a Party is required to remit or pay Taxes that are the other Party's responsibility hereunder, the responsible Party shall promptly reimburse the other for such Taxes. Both Parties shall use reasonable efforts to administer this REPA and implement the provisions in accordance with their intent to minimize Taxes for which each is responsible hereunder. In the event any of the sales of Energy or Renewable Energy Credits hereunder are exempt or

excluded from any particular Tax(es) payable by Purchaser, Purchaser shall provide Seller with all necessary documentation within thirty (30) days after the execution of this REPA to evidence such exemption or exclusion (or, with regard to any such Tax(es) enacted after the Effective Date, Purchaser shall provide Seller with such documentation before the date on which the enactment requires the delivery of documentation to Seller in order to effect an exclusion or exemption from such Tax(es)). In the event Purchaser does not provide such documentation, then Purchaser shall indemnify, defend and hold Seller harmless from any liability with respect to Tax(es) to which Purchaser is exempt or excluded.

20.3 Fines and Penalties.

(A) Seller shall pay when due all fees, fines, penalties or costs to the extent incurred by Seller or its agents, employees or contractors for noncompliance by Seller, its employees, or subcontractors with any provision of this REPA, or any contractual obligation, permit or requirements of law except for such fines, penalties and costs that are being actively contested in good faith and with due diligence by Seller and for which adequate financial reserves have been set aside to pay such fines, penalties or costs in the event of an adverse determination.

(B) If fees, fines, penalties, or costs are claimed or assessed against either Party by any Governmental Authority or PJM due to noncompliance by the other Party with this REPA, any requirements of law with which compliance is required by this REPA, any permit or contractual obligation, or, if the work of the other Party or any of its contractors or subcontractors is delayed or stopped by order of any Governmental Authority or PJM due to the other Party's noncompliance with any requirements of law with which compliance is required by this REPA, permit, or contractual obligation, penalized Party shall indemnify and hold other Party harmless against any and all reasonable losses, liabilities, damages, and claims suffered or incurred by other Party, including claims for indemnity or contribution made by third parties against other Party, except to the extent other Party recovers any such losses, liabilities or damages through other provisions of this REPA.

20.4 Rate Changes.

The terms and conditions and the rates for service specified in this REPA shall remain in effect for the term of the transaction described herein. Absent the Parties' written agreement, this REPA shall not be subject to change by application of either Party pursuant to Section 205 or 206 of the Federal Power Act.

Absent the agreement of all parties to the proposed change, the standard of review for changes to this REPA whether proposed by a Party, a non-party, or the Federal Energy Regulatory Commission acting sua sponte shall be the "public interest" standard of review set forth in United Gas Pipe Line v. Mobile Gas Service Corp., 350 U.S. 332 (1956) and Federal Power Commission v. Sierra Pacific Power Co., 350 U.S. 348 (1956) (the "Mobile-Sierra doctrine"), or such other standard of review permissible

to preserve the intent of the parties pursuant to this Section to uphold the sanctity of contracts without modification.

20.5 Disclaimer of Third Party Beneficiary Rights.

Nothing in this REPA shall be construed to create any duty to, or standard of care with reference to, or any liability to, any person not a party to this REPA.

20.6 Relationship of the Parties.

(A) This REPA shall not be interpreted to create an association, joint venture, or partnership between the Parties nor to impose any partnership obligation or liability upon either Party. Neither Party shall have any right, power, or authority to enter into any agreement or undertaking for, or act on behalf of, or to act as an agent or representative of, the other Party.

(B) Seller shall be solely liable for the payment of all wages, taxes, and other costs related to the employment of persons to perform such services, including all federal, state, and local income, social security, payroll, and employment taxes and statutorily mandated workers' compensation coverage. None of the persons employed by Seller shall be considered employees of Purchaser for any purpose; nor shall Seller represent to any person that he or she is or shall become a Purchaser employee.

20.7 Equal Employment Opportunity Compliance Certification.

Seller acknowledges that as a government contractor Purchaser is subject to various federal laws, executive orders, and regulations regarding equal employment opportunity and affirmative action. These laws may also be applicable to Seller as a subcontractor to Purchaser. Seller shall comply with all applicable equal opportunity and affirmative action federal laws, executive orders, and regulations, including, if applicable, 41 C.F.R. §60-1.4(a)(1-7).

20.8 Survival of Obligations.

Cancellation, expiration, or earlier termination of this REPA shall not relieve the Parties of obligations that by their nature should survive such cancellation, expiration, or termination, prior to the term of the applicable statute of limitations, including warranties, remedies, or indemnities, which obligations shall survive for the period of the applicable statute(s) of limitation.

20.9 Severability.

In the event any of the terms, covenants, or conditions of this REPA, its Exhibits, or the application of any such terms, covenants, or conditions, shall be held invalid, illegal, or unenforceable by any court or administrative body having jurisdiction, all other terms, covenants, and conditions of the REPA and their application not adversely affected thereby shall remain in force and effect.

20.10 Complete Agreement; Amendments.

The terms and provisions contained in this REPA constitute the entire agreement between Purchaser and Seller with respect to the Facility and shall supersede all previous communications, representations, or agreements, either verbal or written, between Purchaser and Seller with respect to the sale of Renewable Energy Products from and associated with the Facility. This REPA may be amended, changed, modified, or altered, provided that such amendment, change, modification, or alteration shall be in writing and signed by both Parties hereto.

20.11 Binding Effect.

This REPA, as it may be amended from time to time pursuant to this Article, shall be binding upon and inure to the benefit of the Parties hereto and their respective successors-in-interest, legal representatives, and assigns permitted hereunder.

20.12 Headings.

Captions and headings used in this REPA are for ease of reference only and do not constitute a part of this REPA.

20.13 Counterparts.

This REPA may be executed in any number of counterparts, and each executed counterpart shall have the same force and effect as an original instrument.

20.14 Governing Law; Consent to Jurisdiction; Waiver of Jury Trial.

The interpretation and performance of this REPA and each of its provisions shall be governed and construed in accordance with the laws of the State of New York, without regard to its conflicts of laws provisions. [redacted]

20.15 Confidentiality.

[redacted]

[redacted]

[redacted]

[redacted]

[redacted]

[redacted]

[redacted]

[redacted]

[redacted]

[redacted]

[remainder of this page intentionally left blank]

IN WITNESS WHEREOF, the Parties have executed this REPA.

Seller:

FPL ENERGY ILLINOIS WIND, LLC

By: _____

Purchaser:

KENTUCKY POWER COMPANY

By: _____

IN WITNESS WHEREOF, the Parties have executed this REPA.

Seller:

FPL ENERGY ILLINOIS WIND, LLC

By: _____

Purchaser:

KENTUCKY POWER COMPANY

By: _____
CEO, Kentucky Power Company

EXHIBIT A

[redacted]

[redacted]

[redacted]

[redacted]

[redacted]

[redacted]

[redacted]

[redacted]

[redacted]

[redacted]

[redacted]

[redacted]

[redacted]

[redacted]

[redacted]

[redacted]

[redacted]

[redacted]

[redacted]

[redacted]

[redacted]

[redacted]

[redacted]

[redacted]

[redacted]

[redacted]

[redacted]

[redacted]

[redacted]

[redacted]

[redacted]

[redacted]

[redacted]

[redacted]

[redacted]

[redacted]

[redacted]

[redacted]

EXHIBIT B

FACILITY DESCRIPTION AND SITE MAPS

This Exhibit B is conceptual. A final "as-built" Exhibit B will be completed and attached to this REPA in place hereof after the Facility is completed.

Seller intends to build, own and operate a wind project with a total capacity not to exceed approximately 217.5 MW. The Facility will be located in Lee and Dekalb counties, Illinois and will be interconnected to the 138kV Steward to Waterman transmission line. The Facility will generate electrical power to be sold in the wholesale market.

As presently planned, the Facility will consist of:

- One hundred forty-five (145) GE 1.5 XLE Wind Turbines on 80-meter tubular steel towers for the Facility (each individual Wind Turbine having a nameplate capacity rating of approximately 1500 kW).
- A network of several miles of low profile, gravel field roads providing access to Wind Turbines
- Electrical transformation equipment located at the Facility.
- An underground and aboveground fiber-optic data collection system.
- Maintenance and field office

EXHIBIT C

CONTRACT RATE
($ Per MWh)

The Contract Rate for Monday through Friday excluding NERC Holidays shall be the amount set forth in the table below for the applicable hour:

[redacted]

Beginning January 1, 2012, and on each January 1 thereafter for the remainder of the Term, rates will be increased by 2.25% over the rates for the previous calendar year.

The Contract Rate for Saturdays, Sundays, and all NERC Holidays shall be the amount set forth in the table below for the applicable hour:

[redacted]

EXHIBIT D

NOTICE ADDRESSES

Purchaser	Seller
Notices: Kentucky Power Company C/O American Electric Power Service Corporation 155 West Nationwide Boulevard Columbus, OH 43215 Attn: Contract Administration Fax:(614) 583-1606 **with copies to:** American Electric Power Service Corporation 155 West Nationwide Boulevard Columbus, OH 43215 Attn: Director, Credit Risk Department Fax: (614) 583-1604 **and** Attn: Chief Counsel, CO&L American Electric Power Service Corporation 155 West Nationwide Boulevard Columbus, OH 43215 Attn: Chief Counsel Fax: (614) 583-1603	**Notices:** FPL Energy Illinois Wind, LLC c/o NextEra Energy, LLC 700 Universe Boulevard Juno Beach, FL 33408 Attn: Vice President, Renewables Business Management **with copies to:** FPL Energy Illinois Wind, LLC c/o NextEra Energy, LLC 700 Universe Boulevard Juno Beach, FL 33408 Attn: General Counsel **and** FPL Group Capital Inc. 700 Universe Boulevard Juno Beach, FL 33408 Attn: Treasurer
Contract Administration Committee Representative: Jay Godfrey (614) 583-6162 **jfgodfrey@aep.com** **Alternate:** To be designated in writing by Purchaser at or prior to the first meeting of the Contract Administration Committee	**Contract Administration Committee Representative:** FPL Energy Illinois Wind, LLC c/o NextEra Energy, LLC 700 Universe Boulevard Juno Beach, FL 33408 Attn: Vice President, Renewables Business Management

EXHIBIT E

INSURANCE COVERAGE

SPECIFICATION OF INSURANCE COVERAGE

[redacted]

[redacted]

[redacted]

[redacted]

[redacted]

[redacted]

[redacted]

[redacted]

[redacted]

[redacted]

[redacted]

[redacted]

[redacted]

[redacted]

[redacted]

[redacted]

[redacted]

[redacted]

[redacted]

[redacted]

[redacted]

[redacted]

[redacted]

EXHIBIT F

[INTENTIONALLY DELETED]

EXHIBIT G

POINT OF DELIVERY

This Exhibit G is conceptual. A final "as-built" Exhibit G will be completed and attached to this REPA in place hereof after the Facility is completed.

Conceptual One-Line Diagram
Lee/Dekalb Wind Farm
(Not to be used for actual Design or Construction)

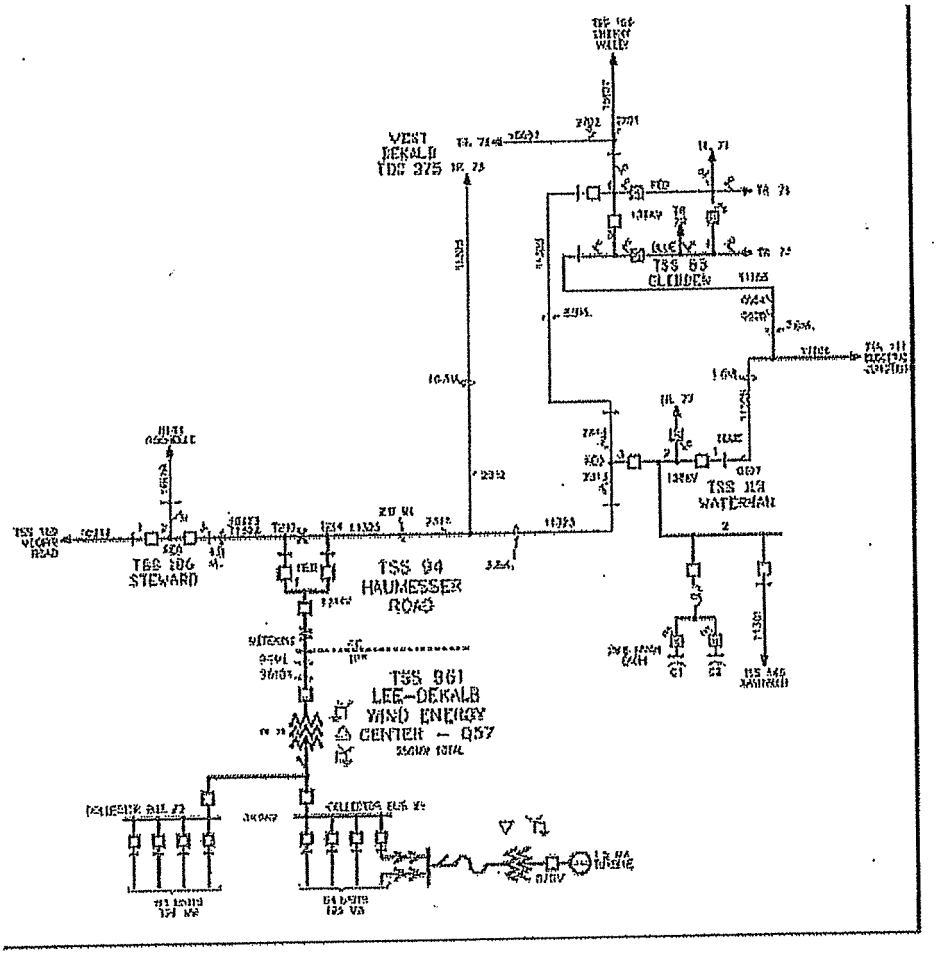

Figure 1. Interconnection Single Line Diagram

EXHIBIT H

Requirements Specification
Real Time Data Requirements for Wind Farms

American Electric Power
Requirements Specification
Real Time Data Requirements for Wind Farms

Version 1.5

1. Purpose

The purpose for real time data from the Wind Farm SCADA system to AEP's Generation Control System is to enable AEP to utilize detailed on-site project information, such as individual measured turbine wind speeds and production, in order to produce the most accurate generation forecast for the wind farm and to optimize integration of the wind generation into the electric power grid.

2. Required Wind Farm SCADA Information

Data must be collected by the wind farm SCADA system and transmitted to AEP at a minimum refresh rate of once every 30 seconds. Minimum required SCADA information includes the following:

i. Total wind farm output (instantaneous MW / MVAR and pulse accumulator MWH / MVARH), which should come from the same metering that the interconnect agreement stipulates
ii. Meteorological Tower Data from at least 2 met towers:
   a) Temperature
   b) Pressure
   c) Relative Humidity
   d) Wind Speed
   e) Wind Direction
iii. Per Turbine Information:
   a) Output (in kW and kVAR)
   b) Wind Speed (in m/s or mph, with at least one decimal point resolution)
   c) Wind Direction (in degrees)
      1. Alternatively, turbine yaw (in degrees) and wind deviation (in degrees)
   d) Status
      1. Ready to generate, but wind speed too low
      2. Ready to generate, but wind speed too high
      3. Online and generating
      4. Offline due to scheduled outage, or unplanned outage

3. Data Communication to AEP

Data communication of the required wind farm SCADA information to AEP must include one or more communication paths to AEP's information systems: 1) to an AEP RTU, AEP PC or a remote AEP data collection system (which could include satellite), for metering data (item 2-i above) and 2) with a TCP/IP network connection to a PC, which will be owned and maintained by AEP and located at the wind farm site, for SCADA information (items 2-ii and 2-iii above). AEP will be responsible for the cost and installation of the telecommunication lines and equipment from the AEP RTU, the AEP PC or the remote data collection system to AEP's information systems. The wind farm owner must be responsible for any telecommunications from the wind farm SCADA to the AEP RTU and AEP PC.

a) Communication to an AEP RTU at the wind farm site (or to a remote AEP data collection system) should be accomplished using an industry standard interface,

both in hardware interface and in software protocol, that can be supported by an AEP RTU. At a minimum, AEP RTUs support RS232 hardware, using either Modbus or DNP protocol, although there may be other hardware interfaces (such as Ethernet) and software protocols that can be utilized.

b) Communication to AEP using a PC located at the site and a dedicated TCP/IP network connect should use an industry standard protocol (such as OPC or Modbus TCP, where the AEP PC would be an OPC/Modbus client that collects data from an OPC/Modbus server) to communicate the point data from the wind farm SCADA to the AEP PC.

Seller must provide server rack/UPS and space in facility substation server room for Purchaser's on-site server and other related communications equipment.

4. Point-to-point check out

The SCADA vendor will be required to perform a point-by-point data checkout, verifying that each point is properly transmitted to the AEP RTU and AEP PC. All metering, communications and point-to-point check out must be completed prior to the Commercial Operation Milestone.

Data	Units
Turbine Data **For each turbine (n = 1 to number of turbines at site)**	
Turbine n Nacelle Wind Speed	m/s
Turbine n Nacelle position	deg
Turbine n Wind Deviation	deg
Turbine n Turbine Power	kW
Turbine n BladeAngle 1 - Actual	deg
Turbine n BladeAngle 2 - Actual	deg
Turbine n BladeAngle 3 - Actual	deg
Turbine n Turbine Status	See below for turbine status

Met Data **For each Met Tower (n = 1 to number of Met Towers at site)**	
Met n Wind Speed (multiple points if multiple heights are available)	m/s
Met n Wind Direction	deg
Met n Ambient Temperature	deg C
Met n Barometric Pressure	mB
Met n Humidity	%

Turbine Status:	
1. Ready to generate, but wind speed too low	
2. Ready to generate, but wind speed too high	
3. Online and generating	
4. Offline due to scheduled outage, or unplanned outage	

EXHIBIT I

[redacted]

PICTURE OMITTED

PICTURE OMITTED

[redacted]

[redacted]

[redacted]

PICTURE OMITTED

[redacted]

PICTURE OMITTED

EXHIBIT J

[redacted]

[redacted]

[redacted]

[redacted]

[redacted]

[redacted]

[redacted]

[redacted]

[redacted]

[redacted]

[redacted]

[redacted]

[redacted]

[redacted]

[redacted]

[redacted]

[redacted]

[redacted]

[redacted]

[redacted]

[redacted]

[redacted]

[redacted]

[redacted]

EXHIBIT K

FORM OF AVAILABILITY NOTICE

Effective Date_____

Time_____

HOUR	Capacity	Number of Wind Turbines in Operation
1		
2		
3		
4		
5		
6		
7		
8		
9		
10		
11		
12		
13		
14		
15		
16		
17		
18		
19		
20		
21		
22		
23		
24		

EXHIBIT L

[redacted]

EXHIBIT M

FORM OF CONSENT AND AGREEMENT

[redacted]

[redacted]

[redacted]

[redacted]

[redacted]

[redacted]

[redacted]

[redacted]

[redacted]

[redacted]

[redacted]

[redacted]

[redacted]

[redacted]

[redacted]

[redacted]

[redacted]

[redacted]

[redacted]

[redacted]

[redacted]

[redacted]

[redacted]

[redacted]

[redacted]

[redacted]

[redacted]

[redacted]

[redacted]

[redacted]

[redacted]

[redacted]

[redacted]

[redacted]

[redacted]

[redacted]

[redacted]

[redacted]

[redacted]

[redacted]

[redacted]

[redacted]

[redacted]

[redacted]

[redacted]

[redacted]

[redacted]

[redacted]

[redacted]

[redacted]

[redacted]

[redacted]

[redacted]

[redacted]

[redacted]

[redacted]

[redacted]

EXHIBIT JFG-3

2009 1100MW Renewable Request for Proposal (RFP)

Bid Results

CONFIDENTIAL AND BUSINESS SENSITIVE

EXHIBIT SCW-3

Kentucky Power Company
Relative Change in Annual Revenue Requirement / Project Cost Comparison
Due to Proposed 100 MW LDWEC PPA
2010-2020

A	B	C	D	E	F	G	H	I	J
	KPCo / LDWEC Wind Capacity (Nameplate) *MW*	*KPCo / LDWEC Wind Energy* *GWh*	LDWEC PPA Cost ($M)	<Avoided> Variable Costs, Including AEP-Pool Energy Settlements ($M)	<Avoided> Pool Capacity Settlement Costs ($M)	D+E+F = KPCO (Total Co.) (Net) Revenue Requirement Change re: LDWEC Project (1) (2) ($M)	KPCO Internal Load (GWh)	G / H x 100 = KPCo Relative (Net) Revenue Requirement (3) (¢/kWh)	*10+ Year Average (2010-2020)* *(¢/kWh)*
		CONFIDENTIAL COMPONENTS							
2010 (5)	*100*					2.8	4,041 (5)	0.070	
2011	*100*					6.4	8,286	0.077	
2012	*100*					6.6	8,354	0.078	
2013	*100*					6.5	8,417	0.077	
2014	*100*					6.2	8,472	0.074	
2015	*100*					6.5	8,530	0.077	
2016	*100*					6.6	8,593	0.076	
2017	*100*					6.2	8,651	0.071	
2018	*100*					5.2	8,707	0.060	
2019	*100*					4.8	8,762	0.055	
2020	*100*					5.4	8,816	0.061	*0.071*

K	L	M
	G x 1000/C = *LDWEC (Net) Cost per Mwh of Wind Generated* *(per MWh)*	*versus... Estimated Cost of RECs* (4) *(per ~MWh)*
	CONFIDENTIAL COMPONENTS	
2010 (5)		
2011		
2012		
2013		
2014		
2015		
2016		
2017		
2018		
2019		
2020		

LDWEC Project "Proxy"...
IF FUTURE Wind Contracts (Post-2012) were to exclude 'Pass-thru' of Federal PTCs (@ ~$30/Mwh)

2013	
2014	
2015	
2016	
2017	
2018	
2019	
2020	

Notes:
(1) (Net) Revenue Requirement determination excludes the monetization (credit to revenue requirement) of any RECs received under the assumption they would ultimately be required to be utilized/retired to achieve a potential
Also, reflects a KPCo 'Total Company' (retail and wholesale) perspective
(2) Assumed if wind PPAs not assigned to KPCo, would be assigned to another AEP (Pool) Member Company, so there would be no incremental MLR-related (Off-System) revenues
(3) As a function of KPCo annual (internal) net energy requirement.
(4) National REC estimates (nominal) per AEP Strategic and Economic Analysis (H209 'SEA' Case)
(5) Assumes PPA start date of July 1, 2010.... therefore for 2010 'Relative (Net) Revenue Requirement' purposes, only Jul-Dec 2010 KPCo Internal Load reflected
(6) Although numerous regional/state REC markets exist *today*, assumes a fungible 'national' REC markets would be established in parallel with passage of a Federal RPS

Column Definitions:
D. LDWEC PPA Cost - represents 3rd-party purchase costs under the 100 MW LDWEC PPA, and based on projected generation profiles for the LDWEC project
E. Variable Cost including AEP-Pool Energy Settlements - primarily fuel costs that are estimated to be offset by wind energy, as well as change in Primary (inter-co) sales to/from AEP Pool cos
F. Pool Capacity Settlement Charges - represents reduced capacity payments to other AEP Member Companies due to the assumed capacity value of PPA assigned to KPCo
H. Net Revenue Requirement Change - is the sum of columns D through F
I. KPCo Relative Net Revenue Requirement - represents the average incremental costs of the LDWEC Project --in cents/kWh-- based on (divided by) KPCo's internal energy requirements
J. Represents the (simple) average (Net) Revenue Requirement impact of the LDWEC Project in cents/kWh over the 2010-2020 period
L. Represents the annual (Net) Cost of the LDWEC project based on (divided by) the corresponding annual estimated wind generated by that project

KPCo Exhibit SCW-3
PUBLIC