GREENEBAUM
GREENEBAUM DOLL & MCDONALD PLLC

Paul B. Whitty
Direct (502) 587-3655 Fax (502) 540-2260 E-mail pbw@gdm.com

RECEIVED
JAN 22 2009
PUBLIC SERVICE
COMMISSION

January 22, 2009

Kentucky Public Service Commission
Attn: Renee Smith
Director, Division of Filings
211 Sower Blvd.
P.O. Box 615
Frankfort, KY 40602-0615

RE: Application to Construct Wireless Communications Facility
Location: 2020 Highway 601, Greenville, KY 42345
Applicant: Powertel/Memphis Inc. d/b/a T-Mobile Kentucky
Site Name: Jarvis
Case No.: 2009-00021

Dear Ms. Smith:

On behalf of our client, Powertel/Memphis, Inc. d/b/a T-Mobile Kentucky, we are herewith submitting an original and five (5) copies of an Application for Certificate of Public Convenience and Necessity for Construction of a Wireless Communications Facility in an area of Muhlenberg County, Kentucky outside the jurisdiction of a planning commission. Also enclosed are two (2) additional copies of this cover letter.

We are submitting this Application with copies of corporate documents for the Applicant which were certified in 1995 and 1996, as provided by Powertel/Memphis, Inc. d/b/a T-Mobile Kentucky and which you will find under Tab A. Per our discussions with Tiffany Bowman, Esq., we have ordered additional corporate information, together with current certifications on all of the corporate documents, from the Delaware Secretary of State's Office. We expect to have those shortly and will forward those to you immediately upon receipt so that they may be substituted under Tab A, replacing the older copies filed herewith.

Please do not hesitate to contact me if you have any questions or comments concerning this filing, or if you need any additional material.

Sincerely,

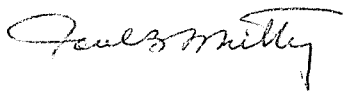

Paul B. Whitty
Attorney for T-Mobile

PBW/tae

Enclosures

3224899_1 doc

RECEIVED
JAN 22 2009
PUBLIC SERVICE COMMISSION

UNIFORM APPLICATION AND COMPLIANCE DOCUMENTS
for
Powertel/Memphis, Inc. d/b/a T-Mobile Kentucky
2020 Highway 601
Greenville, Muhlenberg County, Kentucky 42345
9LV0711A – "Jarvis"
250' Self Support Tower
Case No. 2009-00021

INDEX

1. Application for Certificate of Public Convenience and Necessity for Construction of a Wireless Communications Facility, with the following Exhibits:

   A. Articles of Incorporation for Powertel/Memphis, Inc.

   B. Documentation of FCC License for Powertel/Memphis, Inc.

   C. Site Plans, Survey & Flood Hazard Map

   D. Tower Design & Foundation Design Drawings

   E. Maps of Proposed Tower and Existing Towers

   F. Character of the Area and Co-Location Report

   G. FAA Application

   H. KAZC Application

   I. Geotechnical Engineering Report dated November 14, 2008

   J. Directions to Site

   K. Site Lease

   L. Identity & Qualifications of Designers & Construction Personnel

   M. Adjoining Property Owner List with Notice Letters

   N. Government Official Notice Letter

   O. Notices to Be Posted On and Near Site

   P. Notice to Be Advertised in Newspaper

   Q. Search Ring Map

COMMONWEALTH OF KENTUCKY
BEFORE THE PUBLIC SERVICE COMMISSION

In the Matter of:

THE APPLICATION OF POWERTEL/MEMPHIS, INC., D/B/A T-MOBILE KENTUCKY FOR ISSUANCE OF A CERTIFICATE OF PUBLIC CONVENIENCE AND NECESSITY TO CONSTRUCT A WIRELESS COMMUNICATION FACILITY AT 2020 HIGHWAY 601, GREENVILLE, KENTUCKY 42345 IN THE WIRELESS COMMUNICATIONS LICENSE AREA IN THE COMMONWEALTH OF KENTUCKY IN THE COUNTY THE MUHLENBERG	)))))))))))	DOCKET NO. 2009-00021

SITE NAME: JARVIS

APPLICATION FOR
CERTIFICATE OF PUBLIC CONVENIENCE AND NECESSITY
FOR CONSTRUCTION OF A WIRELESS COMMUNICATIONS FACILITY

Powertel/Memphis, Inc., a Delaware corporation, d/b/a T-Mobile Kentucky ("Applicant"), by counsel, pursuant to (i) KRS §§278.020, 278.040, 278.650, 278.665 and the rules and regulations applicable thereto, and (ii) the Telecommunications Act of 1996, respectfully submits this Application requesting issuance of a Certificate of Public Convenience and Necessity ("CPCN") from the Kentucky Public Service Commission ("PSC") to construct, maintain, and operate a Wireless Communications Facility ("WCF") to serve the customers of the Applicant with wireless telecommunications service.

In support of this Application, Applicant respectfully provides and states the following information:

1. The complete name and address of the Applicant:

   Powertel/Memphis, Inc., d/b/a T-Mobile Kentucky
   Four Concourse Parkway, Suite 300
   Atlanta, Georgia 30328

2. Applicant proposes construction of an antenna tower for cellular telecommunications services or personal communications services which is to be located in an area outside the jurisdiction of a planning commission, and Applicant submits this Application to the Commission for a Certificate of Public Convenience and Necessity pursuant to KRS §§278.020 (1), 278.650, and 278.655.

3. The Applicant is authorized to conduct business in the Commonwealth of Kentucky. A copy of the Articles of Incorporation for Powertel/Memphis, Inc. is attached hereto as **Exhibit A**.

4. The Applicant is licensed to provide wireless telecommunications service in the Commonwealth of Kentucky. The proposed WCF will serve an area completely within the Applicant's Federal Communications Commission ("FCC") licensed service area. A copy of documentation evidencing the Applicant's FCC license is attached hereto as **Exhibit B**.

5. Public convenience and necessity require the construction of the proposed WCF. The construction of the WCF will bring or improve the Applicant's services to an area currently not served or not adequately served by the Applicant by increasing coverage or capacity and thereby enhancing public access to innovative and competitive wireless telecommunications services. The WCF will provide a necessary link in the Applicant's telecommunications network that is designed to meet the increasing demands for wireless services in Kentucky's wireless communications licensed area. The WCF is an integral link in the Applicant's network design that must be in place to provide adequate coverage to the service area.

6. To address the above-described service needs, Applicant proposes to construct a WCF at 2020 Highway 601, Greenville, Kentucky 42345 (37°13'43.31" North latitude,

87°12'44.75" West longitude), in an area located entirely within the county referenced in the caption of this Application. The property on which the WCF will be located is owned by William C. Hill pursuant to a Deed recorded at Deed Book 469, Page 721 in the office of the Muhlenberg County Clerk. The proposed WCF will consist of a 250-foot tall tower, with a 5-foot tall lightning arrestor attached at the top, for a total height of 255 feet. The WCF will also include concrete foundations to accommodate the placement of the Applicant's proprietary radio electronics equipment. The equipment will be housed in a prefabricated cabinet or shelter that will contain: (i) the transmitting and receiving equipment required to connect the WCF with the Applicant's users in Kentucky, (ii) telephone lines that will link the WCF with the Applicant's other facilities, (iii) battery back-up that will allow the Applicant to operate even after a loss of outside power, and (iv) all other necessary appurtenances. The Applicant's equipment cabinet or shelter will be approved for use in the Commonwealth of Kentucky by the appropriate building inspector having jurisdiction of the site. The WCF compound will be fenced and all access gate(s) will be secured. Further descriptions of the site layout and construction details of the WCF are shown on the site plans and a survey (which includes a 500' vicinity map and Flood Plain Certification) attached hereto as **Exhibit C**; and Tower Design Drawings and Foundation Design Drawings attached hereto as **Exhibit D**. Periodic inspections will be performed on the WCF in accordance with the applicable regulations or requirements of the PSC.

7. A map showing the proposed WCF and all towers within a 1 mile radius, and a map of all towers in the Muhlenberg County area are attached hereto as **Exhibit E**.

8. The site development plans, a vertical profile sketch of the WCF signed and sealed by a professional engineer registered in Kentucky depicting the tower height, as well as a proposed configuration for the antennas of the Applicant and future antenna mounts, foundation

design plans, and a description of the standards according to which the tower was designed, and which likewise have been signed and sealed by professional engineers licensed in Kentucky, are also included in **Exhibits C and D** attached hereto.

9. Applicant has considered the likely effects of the installation of the proposed WCF on nearby land uses and values and has concluded that there is no more suitable location reasonably available from which adequate services can be provided, and that there are no reasonably available opportunities to co-locate Applicant's antennas on an existing structure. Applicant has attempted to co-locate on suitable existing structures such as telecommunications towers or other suitable structures capable of supporting Applicant's facilities, and no other suitable or available co-location site was found to be located in the vicinity of the site. Information regarding the Applicant's efforts to achieve co-location in the vicinity is presented as **Exhibit F** attached hereto.

10. A copy of the Notice of Proposed Construction or Alteration-Off Airport filed with the Federal Aviation Administration ("FAA") on October 31, 2008 is attached hereto as **Exhibit G.**

11. A copy of the Kentucky Airport Zoning Commission ("KAZC") Application for Permit to Construct or Alter a Structure is attached hereto as **Exhibit H.**

12. The WCF will be registered with the FCC pursuant to applicable federal requirements. Appropriate required FCC signage will be posted on the site upon receipt of the tower registration number.

13. A geotechnical engineering firm, Asher Inc., has performed soil boring(s) and subsequent geotechnical engineering studies at the WCF site. A copy of the geotechnical engineering report and evaluation, signed and sealed by a professional engineer registered in the Commonwealth of Kentucky, is attached hereto as **Exhibit I**. The name and address of the geotechnical engineering firm and the professional engineer registered in the Commonwealth of Kentucky who supervised the examination of this WCF site are included as part of this exhibit.

14. Clear directions to the proposed WCF site from the County seat are attached hereto as **Exhibit J**. The name and telephone number of the preparer of **Exhibit J** is included as part of this exhibit.

15. Applicant, pursuant to a written agreement, has acquired the right to use the WCF site and associated property rights. A copy of the agreement or an abbreviated agreement recorded with the County Clerk is attached hereto as **Exhibit K.** Also included as part of **Exhibit K** is the portion of the full agreement demonstrating that in the case of abandonment a method is provided to dismantle and remove the cellular antenna tower, including a timetable for removal.

16. Personnel directly responsible for the design and construction of the proposed WCF are well qualified and experienced and are listed in **Exhibit L** attached hereto. All tower designs meet or exceed applicable laws and regulations. Timothy L. Hardy, a professional engineer registered in Kentucky, with Hardy Engineering Inc., prepared the site plans and construction drawings. Ta-Wen Lee, a professional engineer licensed in Kentucky , prepared the tower design standards. Buford H. Evans, Jr., a professional engineer licensed in Kentucky, prepared the foundation drawings.

17. The Construction Management Company for the proposed facility is Mittrix Engineering, and the Project Manager will be Jeremy Potts.

18. Flood Zone data is included and certified by a licensed professional surveyor for the Commonwealth of Kentucky on Page C2 of the Site Survey which is included in **Exhibit C** attached hereto.

19. The possibility of high winds has been considered in the design of this tower. The tower has been designed and engineered by professional engineers using computer assistance and the same accepted codes and standards as are typically used for high-rise building construction.

20. The site development plan signed and sealed by a professional engineer registered in Kentucky was prepared by Timothy L. Hardy. The site survey was performed by Frank L. Sellinger, II, a licensed professional surveyor for the Commonwealth of Kentucky, and Page C-1 of the Survey included in **Exhibit C** is drawn to a scale of no less than one inch equals 200 feet, and identifies every owner of real estate within 500 feet of the proposed tower (according to the records maintained by the Muhlenberg County Property Valuation Administrator). Every structure and every easement within 500 feet of the proposed tower or within 200 feet of the access road including intersection with the public street system is illustrated in the Survey included in **Exhibit C.**

21. Applicant has notified every person who, according to the records of the Muhlenberg County Property Valuation Administrator, owns property which is within 500 feet of the proposed tower or contiguous to the site property, by certified mail, return receipt requested, of the proposed construction. All notified property owners have been given the docket number under which the proposed Application will be processed and have been informed of their

right to request intervention. A list of the nearby property owners who received the notices, together with copies of the certified letters, are attached hereto as **Exhibit M**.

22. Applicant has notified the Muhlenberg County Judge/Executive by certified mail, return receipt requested, of the proposed construction. This notice included the PSC docket number under which the Application will be processed and informed the Muhlenberg County Judge/Executive of his/her right to request intervention. A copy of this notice is attached hereto as **Exhibit N.**

23. Two notice signs meeting the requirements prescribed by 807 KAR 5:063, Section 1(2), that measure at least two (2) feet in height and four (4) feet in width and that contain all required language in letters of required height, have been posted, one in a visible location on the proposed site and one on the nearest public road. Such signs shall remain posted for at least two (2) weeks after filing of the Application, and a copy of the posted text is attached hereto as **Exhibit O**.

24. Notice of the location of the proposed facility has also been published in a newspaper of general circulation in the county in which the WCF is proposed to be located. A copy of the wording for the newspaper ad is attached hereto as **Exhibit P**.

25. The general area where the proposed facility is to be located is rural farmland. There are two barns but no residential structures located within a 500-foot radius of the proposed tower location. There is a residence located within 200 feet of the access drive at Highway 601, approximately 1,200 feet from the cell tower site (See Site Survey, Page C-1, included at **Exhibit C**).

26. The process that was used by the Applicant's radio frequency engineers in selecting the site for the proposed WCF was consistent with the general process used for selecting all other existing and proposed WCF facilities within the proposed network design area. Applicants radio frequency engineers have conducted studies and tests in order to develop a highly efficient network that is designed to serve the Federal Communications Commission licensed service area. The engineers determined an optimum area for the placement of the proposed facility in terms of elevation and location to provide the best quality service to customers in the service area. A radio frequency design search area prepared in reference to these radio frequency studies was considered by the Applicant when searching for sites for its antennas that would provide the coverage deemed necessary by the Applicant. Before beginning the site acquisition process, Applicant carefully evaluated locations within the search area for co-location opportunities on existing structures, and no suitable towers or other existing tall structures were found in the immediate area that would meet the technical requirements for the element of the telecommunications network to be provided by the proposed facility. A map of the area in which the tower is proposed to be located which is drawn to scale and clearly depicts the necessary search area within which the site should be located pursuant to radio frequency requirements is attached hereto as **Exhibit Q.**

27. All Exhibits to this Application are hereby incorporated by reference as if fully set out as part of the Application.

28. All responses and requests associated with this Application may be directed to:

Paul B. Whitty
Greenebaum Doll & McDonald, PLLC
3500 National City Tower
101 South Fifth Street
Louisville, Kentucky 40202
Telephone: (502) 587-3655
Facsimile: (502) 540-2260
pbw@gdm.com

WHEREFORE, Applicant respectfully request that the PSC accept the foregoing Application for filing, and having met the requirements of KRS §§ 278.020(1), 278.650, and 278.665 and all applicable rules and regulations of the PSC, grant a Certificate of Public Convenience and Necessity to construct and operate the WCF at the location set forth herein.

Respectfully submitted,

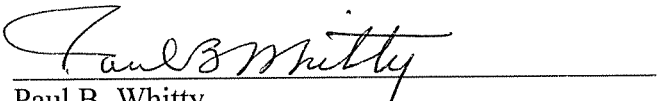

Paul B. Whitty
Greenebaum Doll & McDonald, PLLC
3500 National City Tower
101 South Fifth Street
Louisville, Kentucky 40202
Telephone: (502) 587-3655
Facsimile: (502) 540-2260
Attorney for Powertel/Memphis, Inc.
d/b/a T-Mobile Kentucky

3215180_1.doc

P16

Powertel/Kentucky, Inc. merges into
Powertel/Memphis, Inc.

Delaware

The First State

I, HARRIET SMITH WINDSOR, SECRETARY OF STATE OF THE STATE OF DELAWARE, DO HEREBY CERTIFY THE ATTACHED IS A TRUE AND CORRECT COPY OF THE CERTIFICATE OF MERGER, WHICH MERGES:

"POWERTEL/KENTUCKY, INC.", A DELAWARE CORPORATION,

WITH AND INTO "POWERTEL/MEMPHIS, INC." UNDER THE NAME OF "POWERTEL/MEMPHIS, INC.", A CORPORATION ORGANIZED AND EXISTING UNDER THE LAWS OF THE STATE OF DELAWARE, AS RECEIVED AND FILED IN THIS OFFICE THE TWENTY-FIRST DAY OF DECEMBER, A.D. 2005, AT 11:30 O'CLOCK A.M.

AND I DO HEREBY FURTHER CERTIFY THAT THE EFFECTIVE DATE OF THE AFORESAID CERTIFICATE OF MERGER IS THE FIRST DAY OF JANUARY, A.D. 2006, AT 12:30 O'CLOCK A.M.

A FILED COPY OF THIS CERTIFICATE HAS BEEN FORWARDED TO THE NEW CASTLE COUNTY RECORDER OF DEEDS.

2447268 8100M

051046113

Harriet Smith Windsor

Harriet Smith Windsor, Secretary of State

AUTHENTICATION: 4400474

DATE: 12-23-05

State of Delaware
Secretary of State
Division of Corporations
Delivered 11:30 AM 12/21/2005
FILED 11:30 AM 12/21/2005
SRV 051046113 - 2447268 FILE

STATE OF DELAWARE
CERTIFICATE OF MERGER OF
DOMESTIC CORPORATIONS

Pursuant to Title 8, Section 251(c) of the Delaware General Corporation Law, the undersigned corporation executed the following Certificate of Merger:

FIRST: The name of the surviving corporation is Powertel/Memphis, Inc., and the name of the corporation being merged into this surviving corporation is Powertel/Kentucky, Inc.

SECOND: The Agreement of Merger has been approved, adopted, certified, executed and acknowledged by each of the constituent corporations.

THIRD: The name of the surviving corporation is Powertel/Memphis, Inc., a Delaware corporation.

FOURTH: The Certificate of Incorporation of the surviving corporation shall be its Certificate of Incorporation.

FIFTH: The merger is to become effective on January 1, 2006 at 12:50 a.m.

SIXTH: The Agreement of Merger is on file at 12920 SE 38th Street, Bellevue, WA 98006, the place of business of the surviving corporation.

SEVENTH: A copy of the Agreement of Merger will be furnished by the surviving corporation on request, without cost, to any stockholder of the constituent corporations.

IN WITNESS WHEREOF, said surviving corporation has caused this certificate to be signed by an authorized officer, the 15th day of December A.D., 2005.

By: /S/ David A. Miller
Authorized Officer

Name: David A. Miller
Print or Type

Title: Senior Vice President

State of Delaware

Office of the Secretary of State

I, EDWARD J. FREEL, SECRETARY OF STATE OF THE STATE OF DELAWARE, DO HEREBY CERTIFY THE ATTACHED IS A TRUE AND CORRECT COPY OF THE CERTIFICATE OF AMENDMENT OF "INTERCEL MEMPHIS MTA, INC.", CHANGING ITS NAME FROM "INTERCEL MEMPHIS MTA, INC." TO "POWERTEL/MEMPHIS, INC." FILED IN THIS OFFICE ON THE SEVENTEENTH DAY OF JULY, A.D. 1996 AT 9 O'CLOCK A.M.

A CERTIFIED COPY OF THIS CERTIFICATE HAS BEEN FORWARDED TO THE NEW CASTLE COUNTY RECORDER OF DEEDS FOR RECORDING.

GREAT SEAL OF THE STATE OF DELAWARE
LIBERTY AND INDEPENDENCE
1793 • 1847 • 1907

Edward J. Freel, Secretary of State

2447268 8100

960207691

AUTHENTICATION: 8030247

DATE: 07-17-96

CERTIFICATE OF AMENDMENT

OF

CERTIFICATE OF INCORPORATION

OF

INTERCEL MEMPHIS MTA, INC.

InterCel Memphis MTA, Inc. (the "Corporation"), a corporation organized and existing under the General Corporation Law of the State of Delaware, does hereby certify as follows:

FIRST: That in accordance with the requirements of Section 242 of the General Corporation Law of the State of Delaware, the Board of Directors of the Corporation, acting by written consent signed by all of the directors of the Corporation pursuant to Section 141(f) of the General Corporation Law of the State of Delaware, duly adopted resolutions: (1) proposing and declaring advisable the changing of the Corporation's name to "Powertel/Memphis, Inc.," (2) proposing and declaring advisable the amendment of the Certificate of Incorporation of the Corporation to reflect such change and (3) recommending that such name change and amendment be submitted to the sole stockholder of the Corporation for consideration, action and approval.

SECOND: That the amendment to the Certificate of Incorporation of the Corporation is as follows:

ARTICLE FIRST of the Certificate of Incorporation of the Corporation is hereby amended to read in its entirety as follows:

"FIRST. The name of the corporation is Powertel/Memphis, Inc. (the "Corporation")."

THIRD: That thereafter, pursuant to resolution of the Board of Directors, the sole stockholder of the Corporation, acting by written consent in accordance with Sections 228 and 229 of the General Corporation law of the State of Delaware, duly approved such name change and the aforesaid amendment to the Certificate of Incorporation of the Corporation to reflect such name change.

FOURTH: That the aforesaid amendment to the Certificate of Incorporation of the Corporation was duly adopted in accordance with the provisions of Sections 141(f), 228, 229 and 242 of the General Corporation Law of the State of Delaware.

FIFTH: That upon this Certificate of Amendment of Certificate of Incorporation becoming effective, the name of the Corporation shall be changed to "Powertel/Memphis, Inc."

IN WITNESS WHEREOF, InterCel Memphis MTA, Inc. has caused this Certificate of Amendment of Certificate of Incorporation to be signed by Allen E. Smith, its President, and attested by Fred G. Astor, Jr., its Secretary, on July 9, 1996.

By: _____
Allen E. Smith
President

Attest:

_____
Fred G. Astor, Jr.
Secretary

Federal Communications Commission
Wireless Telecommunications Bureau

Radio Station Authorization (Reference Copy Only)

This is not an official FCC license. It is a record of public information contained in the FCC's licensing database on the date that this reference copy was generated. In cases where FCC rules require the presentation, posting, or display of an FCC license, this document may not be used in place of an official FCC license.

Licensee: Powertel Memphis Licenses, Inc.

ATTN Dan Menser
Powertel Memphis Licenses, Inc.
12920 SE 38th Street
Bellevue, WA 98006

FCC Registration Number (FRN): 0001832807	
Call Sign: KNLH397	**File Number:** 0002907447
Radio Service: CW - PCS Broadband	

Grant Date	Effective Date	Expiration Date	Print Date
04/25/2007	04/25/2007	04/28/2017	11/21/2007

Market Number: BTA263	**Channel Block:** E	**Sub-Market Designator:** 3
Market Name: Louisville, KY		

1st Build-out Date	2nd Build-out Date	3rd Build-out Date	4th Build-out Date
04/28/2002			

Special Conditions or Waivers/Conditions

Conditions
Pursuant to Section 309(h) of the Communications Act of 1934, as amended, 47 U.S.C. Section 309(h), this license is subject to the following conditions: This license shall not vest in the licensee any right to operate the station nor any right in the use of the frequencies designated in the license beyond the term thereof nor in any other manner than authorized herein. Neither the license nor the right granted thereunder shall be assigned or otherwise transferred in violation of the Communications Act of 1934, as amended. See 47 U.S.C. Section 310(d). This license is subject in terms to the right of use or control conferred by Section 706 of the Communications Act of 1934, as amended. See 47 U.S.C. Section 606.

To view the geographic areas associated with the license, go to the Universal Licensing System (ULS) homepage at http://wireless.fcc.gov/uls/ and select "License Search". Follow the instruction on how to search for license information

FCC 601 - MB
September 2002

SITE DEVELOPMENT PLANS FOR
POWERTEL / MEMPHIS, INC.

SITE #: 9LV0711A
SITE NAME: JARVIS ~~ROAD~~
SITE ADDRESS: ~~900 MALONE FARM LANE~~
~~BELTON, KENTUCKY 42324~~
2020 Highway 601
Greenville, Kentucky 42345

GENERAL NOTES:

1. ALL CONSTRUCTION TO BE IN ACCORDANCE WITH THE COUNTY OF **MUHLENBERG** REGULATIONS
2. CONTRACTOR SHALL NOTIFY ALL UTILITIES AT LEAST 24 HOURS PRIOR TO START OF CONSTRUCTION TO VERIFY LOCATION OF ALL UTILITIES SHOWN OR NOT SHOWN.
3. ALL UTILITIES WITHIN ROADWAY SHALL BE BACKFILLED WITH STONE.
4. CONTRACTOR SHALL REPAIR AT HIS EXPENSE DAMAGE TO ANY EXISTING IMPROVEMENTS DURING CONSTRUCTION, SUCH AS, BUT NOT LIMITED TO DRAINAGE, UTILITIES, PAVEMENT, STRIPPING, CURBS, ETC.. REPAIRS SHALL BE EQUAL TO OR BETTER THAN EXISTING CONDITIONS.
5. CONTRACTOR SHALL BE RESPONSIBLE FOR REMOVING ALL UNUSABLE MATERIALS FROM THE SITE.
6. CONTRACTOR SHALL COORDINATE WITH POWER COMPANY PROVIDING TEMPORARY SERVICE FOR CONSTRUCTION FACILITIES DURING CONSTRUCTION.
7. THE CONTRACTOR IS SPECIFICALLY CAUTIONED ABOUT THE LOCATION AND/OR ELEVATIONS OF EXISTING UTILITIES SHOWN ON THIS DRAWING. THEY ARE BASED UPON RECORDS FROM VARIOUS UTILITY COMPANIES, DEEDS, AND PLATS OF RECORD, AND WHERE POSSIBLE ACTUAL FIELD MEASUREMENTS. THIS INFORMATION IS NOT TO BE TAKEN EXACT OR COMPLETE.
8. IT SHALL BE THE CONTRACTOR'S RESPONSIBILITY TO FIELD VERIFY THE EXACT LOCATION OF EXISTING UTILITIES WHICH MAY CONFLICT WITH PROPOSED IMPROVEMENTS.
9. THIS PROJECT WILL NOT REQUIRE WATER OR SEWER SERVICE.
10. CONTRACTOR SHALL REMOVE ANY DIRT OR MUD FROM TIRES OF ANY CONSTRUCTION VEHICLES PRIOR TO LEAVING SITE.
11. REFER TO BUILDING/TOWER PLANS FOR PROPOSED DIMENSIONS AND OTHER SPECIFICS WHICH ARE NOT SHOWN.
12. CONTRACTOR IS RESPONSIBLE FOR MAINTAINING A PROPER TRAFFIC CONTROL PLAN FOR PUBLIC SAFETY ADJACENT TO CONSTRUCTION SITE. THE TRAFFIC CONTROL PLAN MUST BE IN ACCORDANCE WITH LATEST MUTCD EDITION.
13. CONTACT LOCAL GOVERNING JURISDICTION FOR TYPE AND SIZE OF GENERATOR FUEL LINE PRIOR TO INSTALLATION.

SIGNATURE AUTHORIZATIONS:

RF ENGINEER APPROVAL:
SIGNATURE _____ DATE: _____

CONSTRUCTION MANAGER APPROVAL:
SIGNATURE _____ DATE: _____

SITE ACQUISITION AGENT APPROVAL:
SIGNATURE _____ DATE: _____

LAND OWNER APPROVAL:
SIGNATURE _____ DATE: _____

OPS APPROVAL:
SIGNATURE _____ DATE: _____

ZONING/PERMITTING APPROVAL:
SIGNATURE _____ DATE: _____

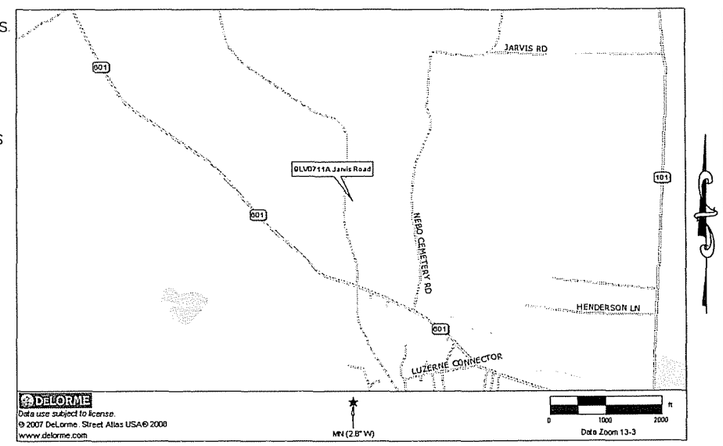

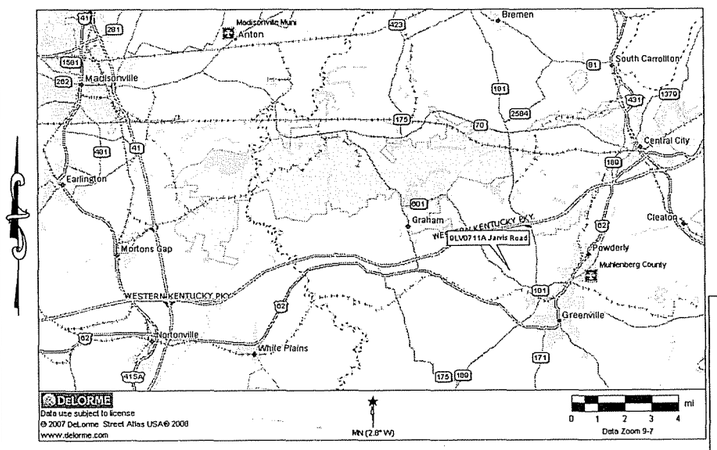

VICINITY MAP

NOT TO SCALE

STATE OF KENTUCKY
TIMOTHY L. HARDY
20374
REGISTERED PROFESSIONAL ENGINEER
12/2/8
REGISTERED PROFESSIONAL ENGINEER SEAL

DIRECTIONS:

FROM LOUISVILLE: TAKE I-24 RAMP TO MURFREEBORO APPROX. 2 MILES. TAKE I-24W APPROX. 67.4 MILES. TAKE EXIT 86 FOR HWY 41/PENNYRILE PKWY TOWARDS HOPKINSVILLE APPROX. 6 MILES. TURN RIGHT AT FORT CAMBELL BLVD/US-41 APPROX. 8.6 MILES. CONTINUE TO FOLLOW FORT CAMBELL BLVD.; TAKE US-41 RAMP TO HENDERSON APPROX. 5 MILES. MERGE ONTO PENNYRILE PKWY N APPROX. 26.9 MILES. TAKE EXIT 33 FOR US-62 TOWARD NORTONVILLE/GREENVILLE APPROX. 2 MILES. TURN RIGHT AT NORTONVILLERD/US-62; CONTINUE TO FOLLOW US-62 APPROX. 13.8 MILES. TURN LEFT AT SR181/SR601 APPROX. 2 MILES. FOLLOW SR 181 SR601 TO PROPOSED SITE LOCATION. PROPOSED SITE IS ON THE NORTH SIDE OF SR 601 AND TO THE WEST OF NEBO CEMETERY RD.

"SURVEY" COORDINATES:

LATITUDE: 37° 13' 43.31"
LONGITUDE: -87° 12' 44.75"
GROUND ELEV: 517' AMSL

ELECTRIC CO.:

KENTUCKY UTILITIES
220 WEST MAIN STREET
PO BOX 32010
LOUISVILLE, KY 40232
PHONE: (800) 981-0600
(800) 331-7370

TELEPHONE CO.:

AT & T
CONTACT: CUSTOMER SERVICE

PERMIT JURISDICTION:

MUHLENBERG COUNTY

LESSOR:

BILL HILL
900 MALONE FARM LANE
BELTON, KY 42324
PHONE: (270) 543-5416
EMAIL: FIREBURNS2001@YAHOO.COM

LESSEE:

powertel

POWERTEL / MEMPHIS, INC.
LOUISVILLE MARKET
11509 COMMONWEALTH DRIVE,
SUITE 9
LOUISVILLE, KENTUCKY 40299
CONTACT: REAL ESTATE

ENGINEER:

HARDY ENGINEERING, INC.

209 LINDEN STREET
TRUSSVILLE, ALABAMA 35173
CONTACT: TIM HARDY
PHONE: (205) 655-1427
MOBILE: (205) 222-7563

INDEX:

		REV.:	DATE:
T1	TITLE SHEET		
	SURVEY		
C0	GRADING PLAN		
C1	OVERALL SITE LAYOUT		
C1.5	DETAILED SITE LAYOUT		
C2	TOWER ELEVATION		
C3	ANTENNA & COAX GROUNDING DETAIL		
C3.1	COAX GROUNDING DETAIL		
C3.2	GROUNDING RISER DIAGRAM		
C4	EQUIPMENT ELEVATION		
C5	ELECTRICAL DETAILS		
C6	GROUNDING LAYOUT		
C7	ELECTRICAL CONDUIT LAYOUT		
C7.1	PANEL BOARD CALCULATIONS		
C8	CONCRETE FOUNDATION DETAILS		
C9	WIRING DIAGRAM		
C10	UTILITY TRENCH DETAILS		
C11	FENCE DETAILS		
C12	SILT FENCE DETAILS AND NOTES		

S1/1 – VICINITY AND 500' STRUCTURAL MAP

S1/2 – U.S.G.S. QUAD MAP

SHEET 2

S2/1 – ABUTTING PROPERTY OWNERS

SHEET 2

S3/1 – PROPOSED LEASE AREA

S3/2 – LEGAL DESCRIPTIONS

S3/3 – FLOOD ZONE DATA

S3/1

COORDINATE POINT LOCATION

NAD 1983
LATITUDE: 37° 13' 43.31"
LONGITUDE: 87° 12' 44.75"
NAVD 1988
ELEVATION: 517' AMSL
KENTUCKY STATE PLANE COORDINATE SOUTH ZONE
(BLUE MARBLE GEOGRAPHIC
CALCULATOR VERSION 3.0)
NORTHING: 1969701.6260
EASTING: 1214661.2985

PROJECT POWER POLE

UTILITY COMPANY: UNKNOWN
IDENTIFICATION #: N/A

PROJECT BENCHMARK

NORTH: 1969699.601
EAST: 1214616.416
ELEVATION: 513.02' AMSL
LOCATION: BEING AN IPC SET AT THE WESTERN MOST CORNER OF THE PROPOSED LEASE AREA

SYMBOL LEGEND

- WOOD POWER POLE
- LIGHT POLE
- TELEPHONE PEDESTAL
- GUY ANCHOR
- MANHOLE
- WATER VALVE
- WATER METER
- FIRE HYDRANT
- ELECTRIC BOX
- F.P. FENCE POST
- SET #5 REBAR (UNLESS OTHERWISE NOTED)
- EXISTING #5 REBAR (UNLESS OTHERWISE NOTED)

ABBREVIATIONS

EP	EDGE OF PAVEMENT
ROW	RIGHT OF WAY
℄	CENTERLINE
RCP	REINFORCED CONCRETE PIPE
CONC	CONCRETE
CMP	CORRUGATED METAL PIPE
PL	SUBJECT PROPERTY LINE
TC	TOP OF CURB
BC	BOTTOM OF CURB
POB	POINT OF BEGINNING
IPC	IRON PIN CAPPED

LINE LEGEND

- OVERHEAD ELECTRIC
- UNDERGROUND GAS LINE
- UNDERGROUND WATER LINE
- OVERHEAD ELECTRIC & TELEPHONE LINE
- OVERHEAD TELEPHONE LINE
- DRAINAGE/STORM SEWER LINE
- EXISTING FENCE
- PROPOSED FENCE
- SUBJECT PROPERTY BOUNDARY
- RIGHT OF WAY CENTERLINE

NOTE: SYMBOLS, ABBREVIATIONS, OR LINESTYLES DO NOT NECESSARILY APPEAR ON DRAWING(S). USE ONLY AS APPLICABLE

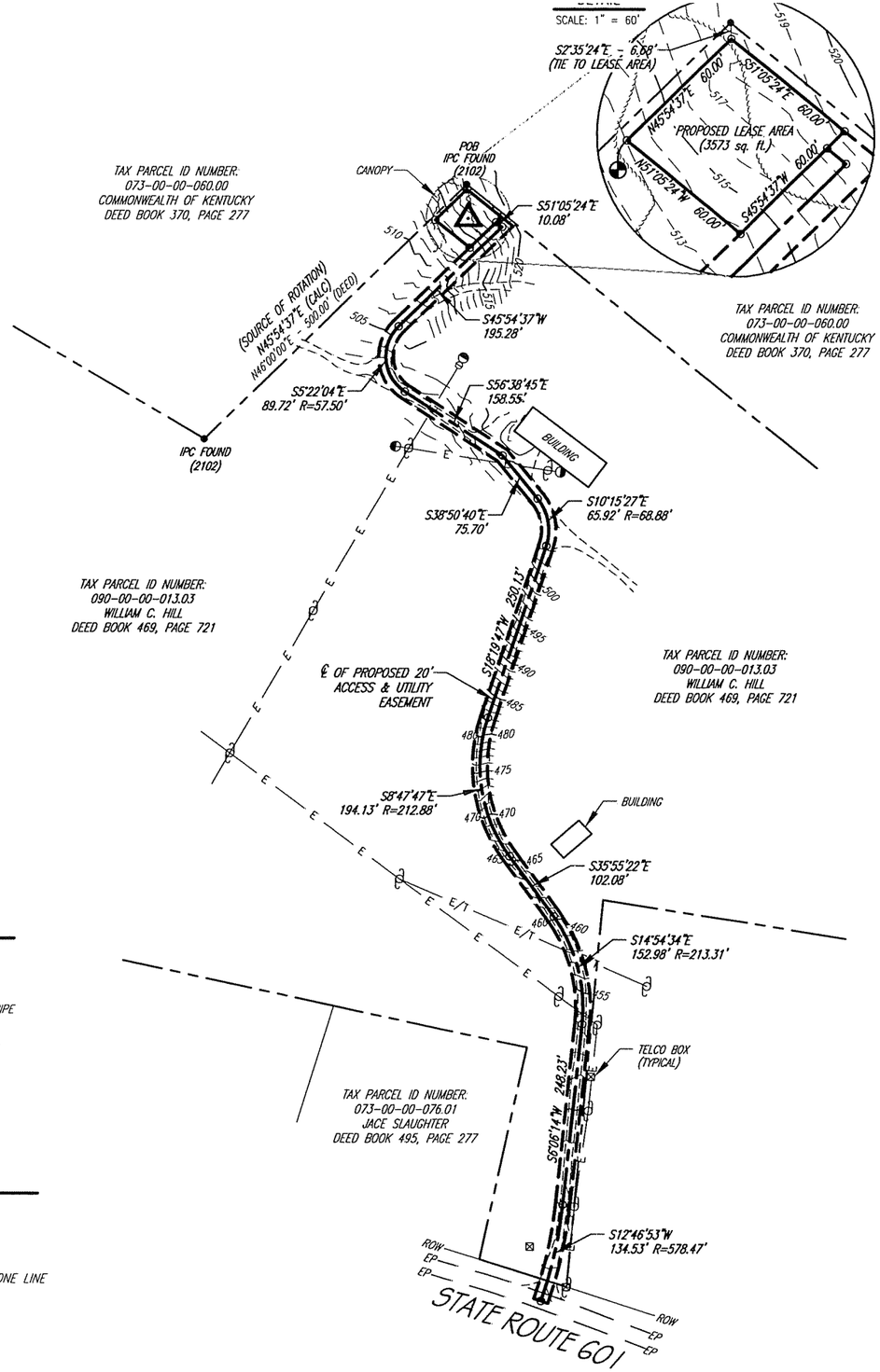

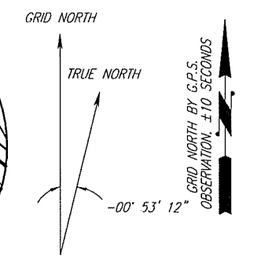

NORTH IS BASED ON THE KENTUCKY STATE PLANE COORDINATE SYSTEM, SOUTH ZONE AND WAS DETERMINED BY COMPUTATION FROM G.P.S. OBSERVATION ON OCTOBER 10, 2008.

TAX PARCEL ID NUMBER:
073-00-00-060.00
COMMONWEALTH OF KENTUCKY
DEED BOOK 370, PAGE 277

TAX PARCEL ID NUMBER:
090-00-00-013.03
WILLIAM C. HILL
DEED BOOK 469, PAGE 721

0' 200' 400'
(IN FEET)
SCALE: 1" = 200'

UNDERGROUND UTILITIES
CALL 2 WORKING DAYS
BEFORE YOU DIG
INDIANA 1-800-382-5544
KENTUCKY 1-800-752-6007
UTILITIES PROTECTION SERVICE
NON-MEMBERS MUST CALL DIRECTLY

The utility information shown on this plat, prepared by FSTAN was obtained from existing records and or by field locations. It is the contractor's responsibility to verify their existence and location, and to contact the appropriate utility company for field locations.

STATE OF KENTUCKY
FRANK L. SELLINGER
#3282
LICENSED PROFESSIONAL LAND SURVEYOR

S3/2

LEGAL DESCRIPTIONS:

This is a description for T-Mobile, of an area to be leased from the property of William C. Hill, which is further described as follows:

PROPOSED LEASE AREA

Beginning at an IPC "2102" found at the North corner of the property conveyed to William C. Hill, in Deed Book 469, Page 721, in the Office of the County Clerk of Muhlenburg County, Kentucky, being N 45°54'37" E - 500.00' from an IPC "2102" found at the South corner of the property conveyed by Commonwealth of Kentucky, in Deed Book 370, Page 277 in the said Clerks Office, thence traversing said Hill property S 2°35'24" E - 6.68' to a set #5 rebar with a cap stamped "FSTAN #3282" and the TRUE POINT OF BEGINNING of the Proposed Lease Area; thence S 51°05'24" E - 60.00' to a set #5 rebar with a cap stamped "FSTAN #3282"; thence S 45°54'37" W - 60.00' to a set #5 rebar with a cap stamped "FSTAN #3282"; thence N 51°05'24" W - 60.00' to a set #5 rebar with a cap stamped "FSTAN #3282"; thence N 45°54'37" E - 60.00' to a set #5 rebar with a cap stamped "FSTAN #3282" and the true point of beginning containing 3,600 square feet as per survey by Frank L. Sellinger, II, PLS No. 3282 with FS/Tan Land Surveyors & Consulting Engineers, dated October 21, 2008, and revised October 29, 2008.

CENTERLINE OF PROPOSED 20' ACCESS & UTILITY EASEMENT

Beginning at an IPC "2102" found at the North corner of the property conveyed to William C. Hill, in Deed Book 469, Page 721, in the Office of the County Clerk of Muhlenburg County, Kentucky, being N 45°54'37" E - 500.00' from an IPC "2102" found at the South corner of the property conveyed by Commonwealth of Kentucky, in Deed Book 370, Page 277 in the said Clerks Office; thence traversing said Hill property S 2°35'24" E - 6.68' to a set #5 rebar with a cap stamped "FSTAN #3282"; thence S 51°05'24" E - 60.00' to a set #5 rebar with a cap stamped "FSTAN #3282"; thence S 45°54'37" W - 10.00' to a set #5 rebar with a cap stamped "FSTAN #3282" and the TRUE POINT OF BEGINNING of the Proposed Lease Area; thence S 51°05'24" E - 10.08' to a set #5 rebar with a cap stamped "FSTAN #3282"; thence S 45°54'37" W - 195.28' to a set #5 rebar with a cap stamped "FSTAN #3282"; thence with a curve to the left having a radius of 57.50', chord being S 5°22'04" E - 89.72' to a set #5 rebar with a cap stamped "FSTAN #3282"; thence S 56°38'45" E - 158.55' to a set #5 rebar with a cap stamped "FSTAN #3282"; thence S 38°50'40" E - 75.70' to a set #5 rebar with a cap stamped "FSTAN #3282"; thence with a curve to the right having a radius of 68.88', chord being S 10°15'27" E - 65.92' to a set #5 rebar with a cap stamped "FSTAN #3282"; thence S 18°19'47" W - 250.13' to a set #5 rebar with a cap stamped "FSTAN #3282"; thence with a curve to the left having a radius of 212.88', chord being S 8°47'47" E - 194.13' to a set #5 rebar with a cap stamped "FSTAN #3282"; thence S 35°55'22" E - 102.08' to a set #5 rebar with a cap stamped "FSTAN #3282"; thence with a curve to the right having a radius of 213.31', chord being S 14°54'34" E - 152.98' to a set #5 rebar with a cap stamped "FSTAN #3282"; thence S 6°06'14" W - 248.23' to a set #5 rebar with a cap stamped "FSTAN #3282"; thence with a curve to the right having a radius of 578.47', chord being S 12°46'53" W - 134.53' to a set P.K. Nail and the end of the easement as per survey by Frank L. Sellinger, II PLS No. 3282 with FS/Tan Land Surveyors & Consulting Engineers, dated October 21, 2008, and revised October 29, 2008.

2020 Highway 601
Greenville Ky 42345

SURVEYORS NOTES

SOURCE OF BEARING IS A G.P.S. OBSERVATION ON OCTOBER 10, 2008.

SOURCE OF ROTATION BASED ON THE NORTH PROPERTY LINE OF THE HILL PROPERTY HAVING THE BEARING OF N 46° 00' 00" E PER D.B. 469, PG. 721, AND THE CALCULATED BEARING OF N 45° 54' 37" E.

SITE SHOWN SUBJECT TO RIGHT OF WAYS AND EASEMENTS SHOWN HEREON OR NOT.

NO SEARCH OF PUBLIC RECORDS HAS BEEN PERFORMED BY THIS FIRM TO DETERMINE ANY DEFECTS AND/OR AMBIGUITIES IN THE TITLE OF THE PARENT TRACT.

THIS DRAWING DOES NOT REPRESENT A BOUNDARY SURVEY.

EXISTING CONTOURS ARE AT ONE FOOT INTERVALS.

LAND SURVEYOR'S CERTIFICATE

Type "A" Survey - Unadjusted linear traverse closure: 1 in 23,513.

TO ALL PARTIES INTERESTED IN TITLE TO PREMISES SURVEYED
I hereby certify that this plat and survey were made under my supervision, and that the angular and linear measurements, as witnessed by monuments shown hereon, are true and correct to the best of my knowledge and belief.
This survey and plat meets or exceeds the minimum standards of the governing authorities.
This property is subject to any recorded easements or right of ways not shown hereon.

Frank L. Sellinger 10-29-08
Frank L. Sellinger, II Ky. Reg. No. 3282

REFERENCED AS "EXHIBIT C"

OWNER APPROVAL: _____ DATE: _____
T-MOBILE APPROVAL: _____ DATE: _____

S3/3

I HAVE REVIEWED THE FLOOD INSURANCE RATE MAPS (FIRM) MAP NO. 21029300758 DATED 02.06.91 AND THE PROPOSED LEASE AREA DOES NOT APPEAR TO BE IN A FLOOD PRONE AREA. THE PROPOSED LEASE AREA IS LOCATED IN ZONE X.

T · Mobile

F.S. Land Company
T. Alan Neal Company
Land Surveyors and Consulting Engineers
PO Box 17546 2313/2315 Crittenden Drive
Louisville, KY 40217
Phone: (502) 635-5868 (502) 636-5111
Fax: (502) 636-5263

"SITE SURVEY"

SITE NUMBER: 9LV0711A

SITE NAME: JARVIS ~~ROAD~~

SITE ADDRESS: ~~900 MALONE FARM LANE DELTON, KY 42324~~

PROPOSED LEASE AREA: 3573 sq. ft. ~~10,000 sq. ft.~~

PROPERTY OWNER: WILLIAM C. HILL, 107 NORTH MAIN, GREENVILLE, KY 42345

TAX MAP NUMBER: 090-00-00

PARCEL NUMBER: 013-003

SOURCE OF TITLE: DEED BOOK 469, PAGE 721

DWG BY: DJG

CHKD BY: FSII

DATE: 10.21.08

FSTAN PROJECT NO.: 08-5672

REVISIONS:

LEASE AREA/ESMT. - 10.29.08

C2

RADING NOTES:

ALL CONSTRUCTION TO BE IN ACCORDANCE WITH MUHLENBERG COUNTY REGULATIONS.

CONTRACTOR IS RESPONSIBLE FOR REMOVING AND DISPOSING OF ALL TREES AND OBSTRUCTIONS INSIDE THE LEASE AREA AND ACCESS EASEMENT.

CONTRACTOR AND/OR DEVELOPER SHALL BE RESPONSIBLE FOR CONSTRUCTION AND MAINTENANCE OF EROSION AND SEDIMENTATION CONTROLS DURING CONSTRUCTION FOR PROTECTION OF ADJACENT PROPERTIES, ROADWAYS, AND WATERWAYS, USE SILT FENCE WHERE REQUIRED.

CONTRACTOR AND/OR DEVELOPER ARE RESPONSIBLE FOR PROVIDING SITE FREE OF DRAINAGE PROBLEMS.

CONTRACTOR AND/OR DEVELOPER SHALL BE RESPONSIBLE FOR MAINTAINING A PROPER TRAFFIC CONTROL PLAN FOR PUBLIC SAFETY ADJACENT TO CONSTRUCTION SITE. THE TRAFFIC PLAN MUST BE IN ACCORDANCE WITH THE LATEST (MUTCD) EDITION.

CONTRACTOR SHALL GRADE SITE LEVEL AND SHALL MAINTAIN A MINIMUM OF 2 TO 1 SLOPE RUNOFF IMMEDIATE SITE AREA.

CONTRACTOR SHALL USE BEST MANAGEMENT PRACTICES FOR CONSTRUCTION TO PREVENT THE DIVERSION OF SEDIMENT LADEN STORM WATER RUNOFF OR ERODED MATERIALS FROM LEAVING THE CONSTRUCTION SITE.

CONTRACTOR SHALL CLEAR ENTIRE ACCESS AND UTILITY EASEMENT OF OBSTRUCTIONS AS FIRST ORDER OF CONSTRUCTION TO ALLOW FOR INSTALLATION OF POWER BY POWER COMPANY. CONTRACTOR TO CONTACT POWER COMPANY SO THEY CAN BEGIN INSTALLATION OF POWER LINE ONCE EASEMENT IS CLEARED.

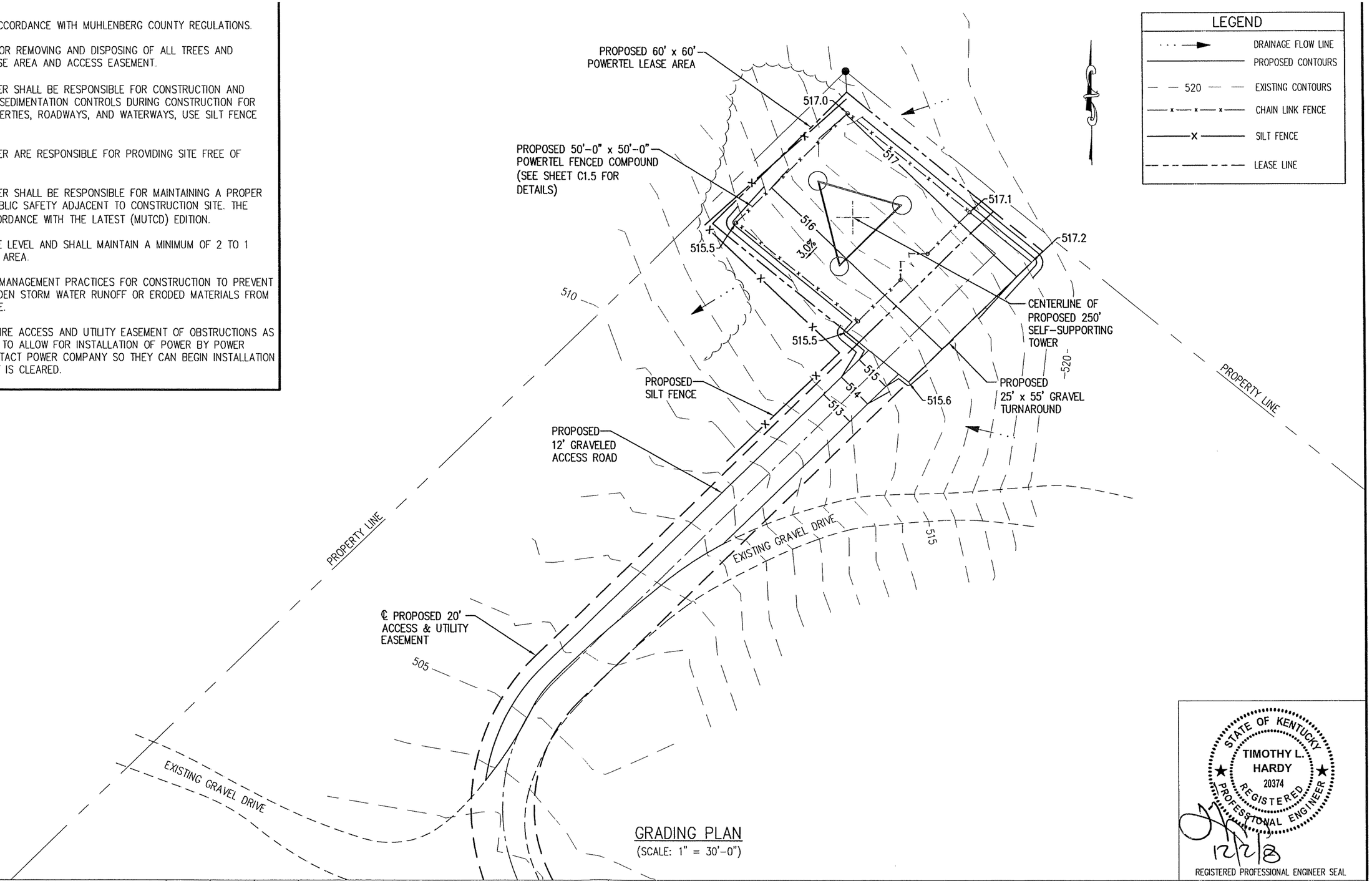

GRADING PLAN
(SCALE: 1" = 30'-0")

STATE OF KENTUCKY
TIMOTHY L. HARDY
20374
REGISTERED PROFESSIONAL ENGINEER
12/2/8
REGISTERED PROFESSIONAL ENGINEER SEAL

EM	REVISION	BY	CHK. BY	DATE

DRAWN BY: A. KIRK	DATE: 11-6-08
CHECKED BY: T.L. HARDY	DATE: 11-6-08
APPROVED BY:	DATE:

HARDY ENGINEERING, INC.
ENGINEERING AND CONSULTING
209 LINDEN STREET, P.O. BOX 708
TRUSSVILLE, AL 35173
PHONE: (205) 655-1427 FAX: (205) 661-9027

SITE GRADING PLAN
9LV0711A SITE: JARVIS ~~ROAD~~
GREENVILLE, KENTUCKY
FOR
POWERTEL / MEMPHIS, INC.
LOUISVILLE, KENTUCKY

CAD No:	SCALE:	DWG. No.
LV0711_CO	AS SHOWN	CO

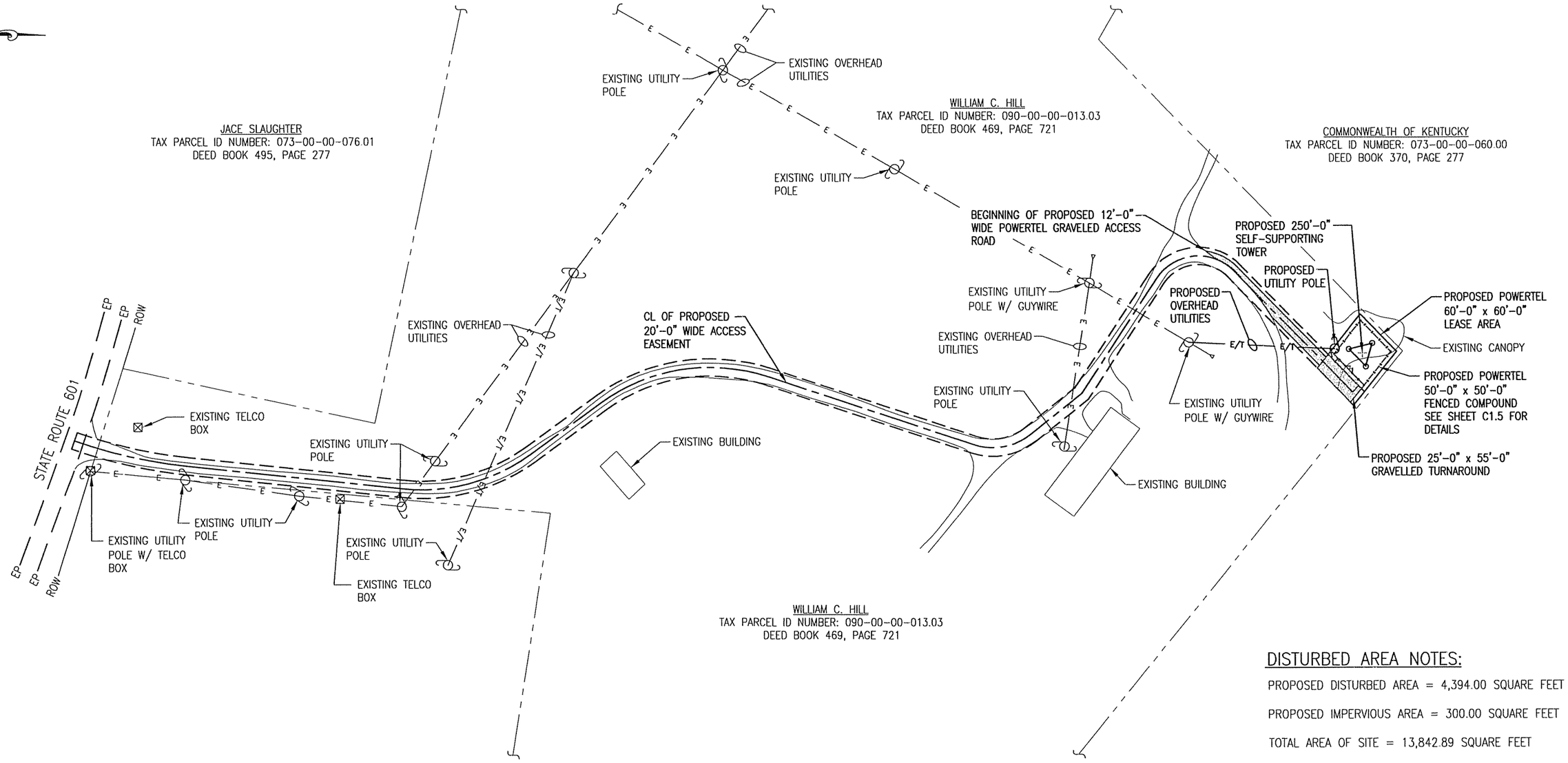

OVERALL SITE LAYOUT

(SCALE: 1" = 120'-0")

DISTURBED AREA NOTES:

PROPOSED DISTURBED AREA = 4,394.00 SQUARE FEET

PROPOSED IMPERVIOUS AREA = 300.00 SQUARE FEET

TOTAL AREA OF SITE = 13,842.89 SQUARE FEET

STATE OF KENTUCKY
TIMOTHY L. HARDY
20374
REGISTERED PROFESSIONAL ENGINEER

12/2/8

REGISTERED PROFESSIONAL ENGINEER SEAL

EM	REVISION	BY	CHK. BY	DATE

DRAWN BY: J.E. STEGER — DATE: 11-06-08
CHECKED BY: T.L. HARDY — DATE: 11-06-08
APPROVED BY: — DATE:

HARDY ENGINEERING, INC.
ENGINEERING AND CONSULTING
209 LINDEN STREET, P.O. BOX 708
TRUSSVILLE, AL 35173
PHONE: (205) 655-1427 FAX: (205) 661-9027

OVERALL SITE LAYOUT
9LV0711A SITE: JARVIS ~~ROAD~~
GREENVILLE, KENTUCKY
FOR
POWERTEL / MEMPHIS INC.
LOUISVILLE, KENTUCKY

CAD No: LV0711_C1 | SCALE: AS SHOWN | DWG No. C1

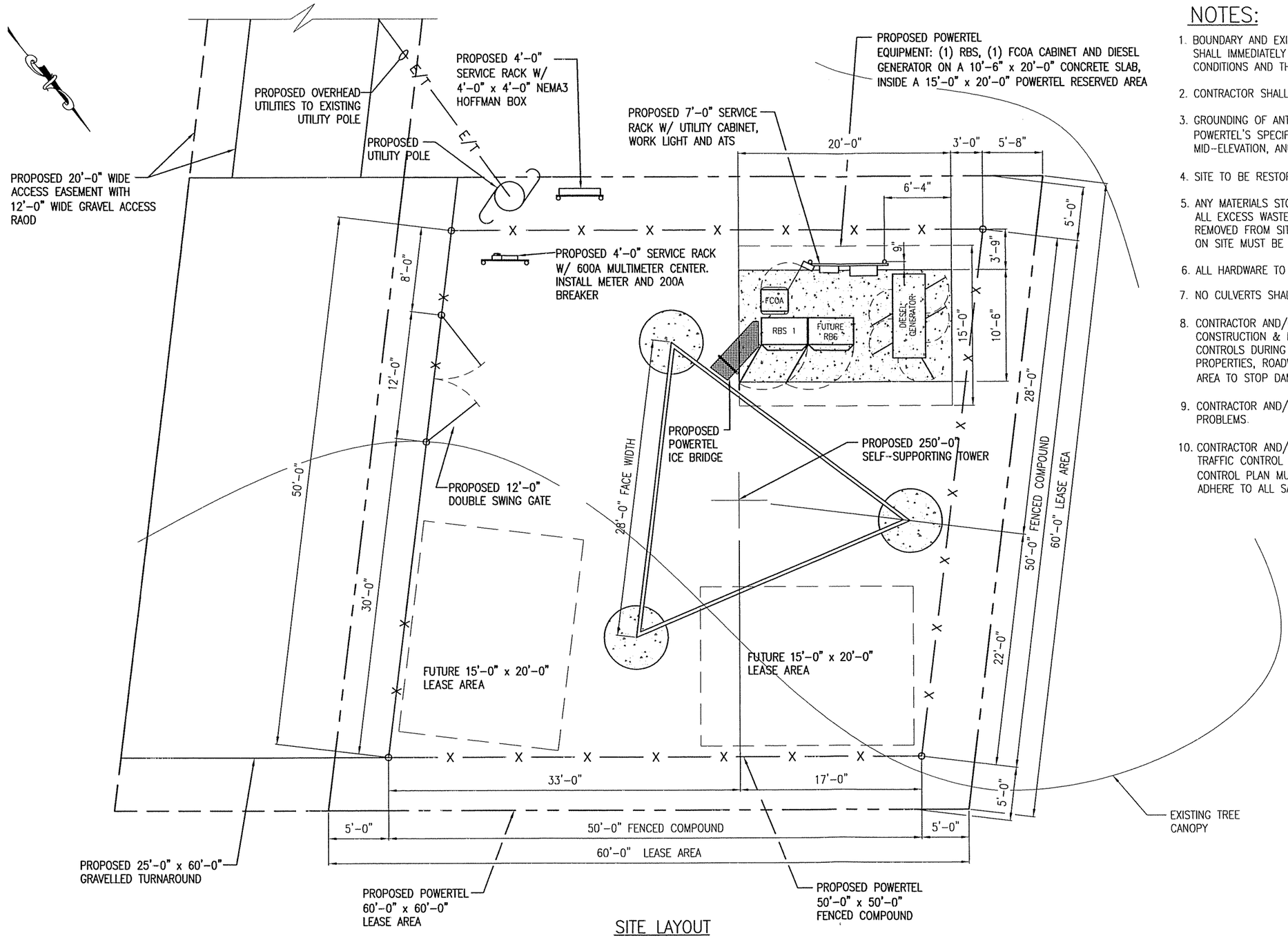

SITE LAYOUT
(SCALE: 1" = 10'-0")

NOTES:

1. BOUNDARY AND EXISTING SITE FEATURES ARE BASED ON FIELD MEASUREMENTS. CONTRACTOR SHALL IMMEDIATELY NOTIFY THE ENGINEER OF ANY DISCREPANCIES BETWEEN ACTUAL FIELD CONDITIONS AND THIS DRAWING.
2. CONTRACTOR SHALL FURNISH ALL MATERIALS FOR 600 AMP SERVICE.
3. GROUNDING OF ANTENNAS MOUNTS, COAX, AND EQUIPMENT SHALL BE IN ACCORDANCE WITH POWERTEL'S SPECIFICATIONS. COAX SHALL BE GROUNDED JUST BELOW ANTENNAS, AT MID-ELEVATION, AND AT BOTTOM OF TOWER.
4. SITE TO BE RESTORED BACK TO **SITE OWNER'S** SPECS.
5. ANY MATERIALS STORED ON SITE SHALL BE STORED IN CLOSED OR COVERED CONTAINERS AND ALL EXCESS WASTE MATERIALS WILL BE PROPERLY DISPOSED OF DAILY AND ALL SOILS REMOVED FROM SITE. NOTE **NO** BURNING ON SITE AT ANYTIME. ACCESS TO OTHER CUSTOMERS ON SITE MUST BE KEPT CLEAR.
6. ALL HARDWARE TO BE STAINLESS STEEL, **NO PLATED METAL TO BE USED.**
7. NO CULVERTS SHALL BE INSTALLED.
8. CONTRACTOR AND/OR DEVELOPER SHALL BE RESPONSIBLE FOR CONSTRUCTION & MAINTENANCE OF EROSION AND SEDIMENTATION CONTROLS DURING CONSTRUCTION FOR PROTECTION OF ADJACENT PROPERTIES, ROADWAYS, AND WATERWAYS. SILT FENCE SHOULD BE INSTALLED AROUND WORK AREA TO STOP DAMAGE TO OTHER CUSTOMER'S EQUIPMENT.
9. CONTRACTOR AND/OR DEVELOPER ARE RESPONSIBLE FOR PROVIDING SITE FREE OF DRAINAGE PROBLEMS.
10. CONTRACTOR AND/OR DEVELOPER SHALL BE RESPONSIBLE FOR MAINTAINING A PROPER TRAFFIC CONTROL PLAN FOR PUBLIC SAFETY ADJACENT TO CONSTRUCTION SITE. THE TRAFFIC CONTROL PLAN MUST BE IN ACCORDANCE WITH LATEST (AMUTCO) EDITION. CONTRACTOR IS TO ADHERE TO ALL SAFETY GUIDELINES, AND **OSHA** SPECS WHILE ON WORK SITE.

STATE OF KENTUCKY
TIMOTHY L. HARDY
20374
REGISTERED PROFESSIONAL ENGINEER
12/2/8
REGISTERED PROFESSIONAL ENGINEER SEAL

EM	REVISIONS	BY	CHK. BY	DATE

DRAWN BY: J.E. STEGER — DATE: 11-06-08
CHECKED BY: T.L. HARDY — DATE: 11-06-08
APPROVED BY: — DATE:

HARDY ENGINEERING, INC.
ENGINEERING AND CONSULTING
209 LINDEN STREET, P.O. BOX 708
TRUSSVILLE, AL 35173
PHONE: (205) 655-1427 FAX: (205) 661-9027

DWG NAME: SITE LAYOUT
9LV0711A SITE: JARVIS ~~ROAD~~
GREENVILLE, KENTUCKY
FOR
POWERTEL / MEMPHIS, INC.
LOUISVILLE, KENTUCKY

CAD No: LV0711_C1.5 | SCALE: AS SHOWN | DWG No: C1.5

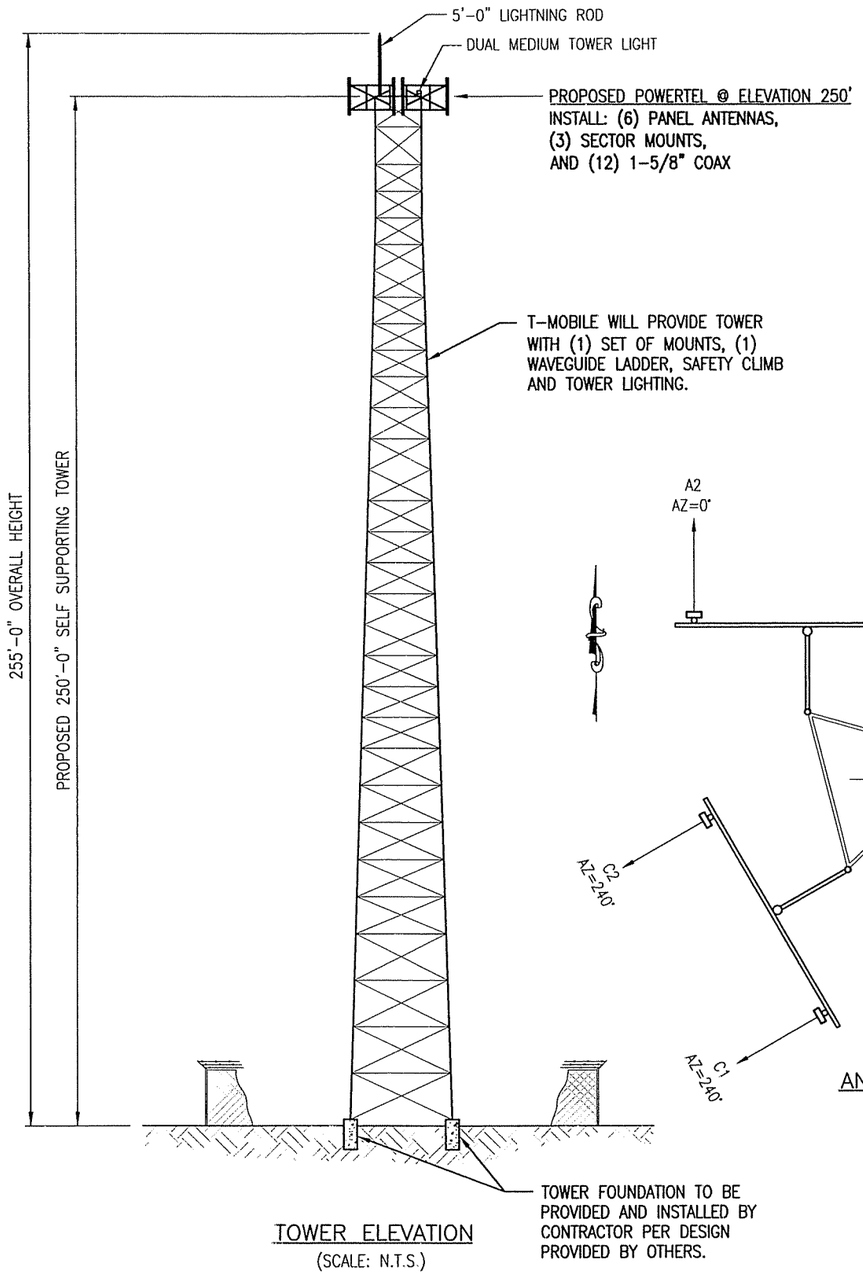

TOWER ELEVATION

(SCALE: N.T.S.)

ANTENNA AND COAX SCHEDULE

ANTENNA MARK	SECTOR	ANTENNA (1)	COAX FEED LOCATION	AZIMUTH (0° = NORTH)	COAX COLOR CODE	COAX CABLE SIZE	MECHANICAL DOWN TILT (2)	ELECTRICAL DOWN TILT	RADIATION CENTER
A1	A	TMBX-6517-R2M	BOTTOM	0°	TX/RX - RED TX/RX - RED-GRAY	(4) 1 5/8"ø	0°	2°	250'
A2	A	TMBX-6517-R2M	BOTTOM	0°	TX/RX - RED-RED-GRAY TX/RX - RED-RED		0°	2°	250'
A3									
B1	B	TMBX-6517-R2M	BOTTOM	90°	TX/RX - BLUE TX/RX - BLUE-GRAY	(4) 1 5/8"ø	0°	2°	250'
B2	B	TMBX-6517-R2M	BOTTOM	90°	TX/RX - BLUE-BLUE-GRAY TX/RX - BLUE-BLUE		0°	2°	250'
B3									
C1	C	TMBX-6517-R2M	BOTTOM	240°	TX/RX - GREEN TX/RX - GREEN-GRAY	(4) 1 5/8"ø	0°	2°	250'
C2	C	TMBX-6517-R2M	BOTTOM	240°	TX/RX - GREEN-GREEN-GRAY TX/RX - GREEN-GREEN		0°	2°	250'
C3									

(1) FINAL ANTENNA TYPE TO BE DETERMINED BY POWERTEL, ANTENNAS TO BE PROVIDED BY POWERTEL AND INSTALLED BY CONTRACTOR.

(2) ALL ANTENNAS TO BE INSTALLED WITH DOWNTILT BRACKETS.

(3) POWERTEL RESERVED LOADING IS (9) ANTENNAS, (18) 1-5/8" COAX, (6) TMA'S

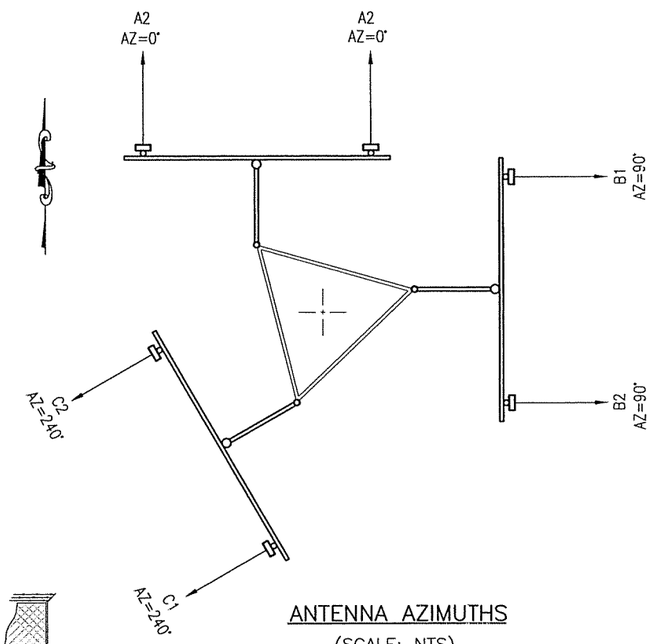

ANTENNA AZIMUTHS

(SCALE: NTS)

GPS POSITIONING NOTE

THE CONTRACTOR SHALL FIELD VERIFY THE GPS LINE OF SIGHT TO THE SKY AND RELOCATE THE GPS ANTENNA ACCORDINGLY AS REQUIRED IF OBSTRUCTED BY EQUIPMENT ABOVE. COORDINATE DETAILS WITH THE CONSTRUCTION MANAGER.

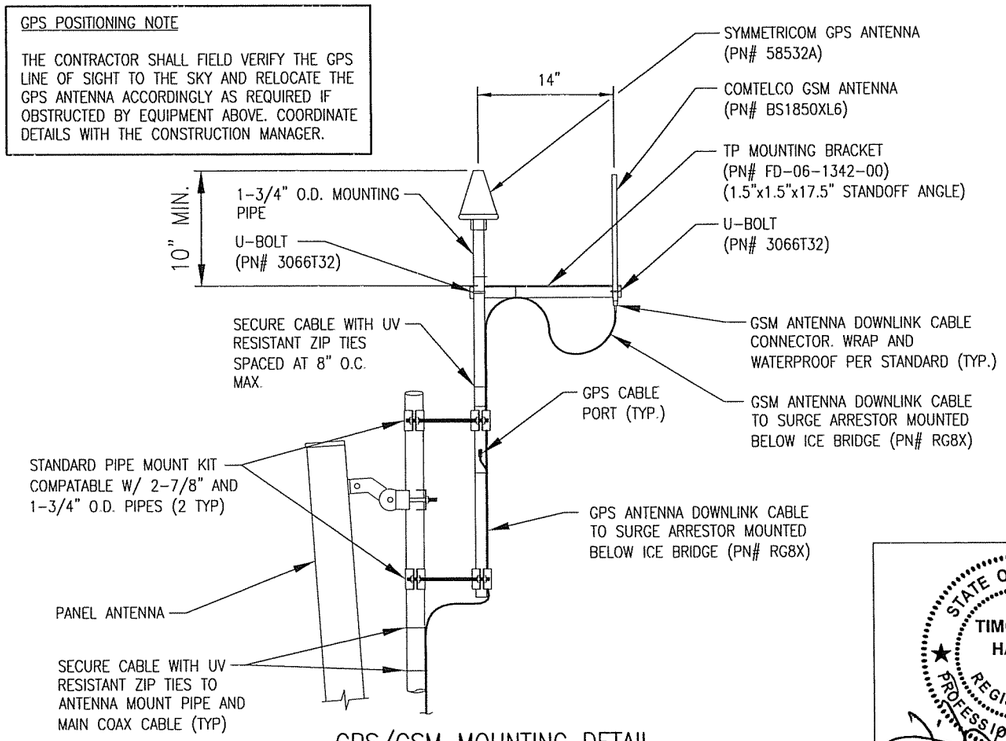

GPS/GSM MOUNTING DETAIL
AT ANTENNA RAD. CENTER

(SCALE: N.T.S.)

STATE OF KENTUCKY
TIMOTHY L. HARDY
20374
REGISTERED PROFESSIONAL ENGINEER

12/2/8

REGISTERED PROFESSIONAL ENGINEER SEAL

ITEM	REVISIONS	BY	CHK. BY	DATE

DRAWN BY: J.E. STEGER — DATE: 11-06-08

CHECKED BY: T.L. HARDY — DATE: 11-06-08

APPROVED BY: — DATE:

HARDY ENGINEERING, INC.
ENGINEERING AND CONSULTING
209 LINDEN STREET, P.O. BOX 708
TRUSSVILLE, AL 35173
PHONE: (205) 655-1427 FAX: (205) 661-9027

DWG. NAME: TOWER ELEVATION

9LV0711A SITE: JARVIS ~~ROAD~~
GREENVILLE, KENTUCKY
FOR
POWERTEL / MEMPHIS, INC.
LOUISVILLE, KENTUCKY

CAD No: LV0711_C2 | SCALE: AS SHOWN | DWG No: C2

REVISED 12-01-2008

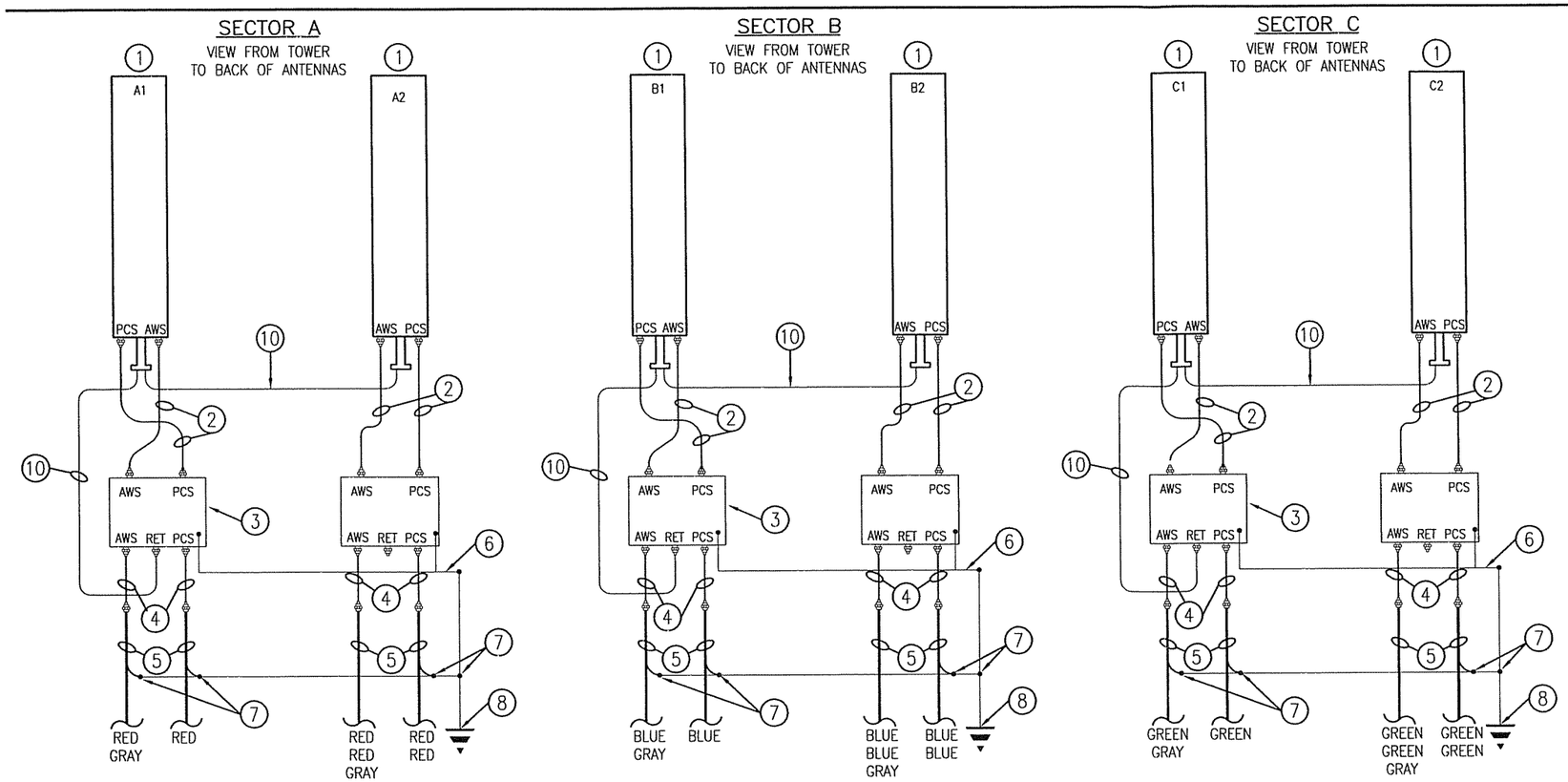

MATERIAL LIST

1. PANEL ANTENNA
2. JUMPER, 1/2"ø x 10'
3. TMA
4. JUMPER, 1/2"ø x 6'
5. COAX, 7/8"ø OR 1 5/8"ø
6. TMA GROUND, #6 THW INSULATED GROUND WIRE
7. COAX GROUND KIT
8. 4" x 14" x 1/4" GROUND BAR MOUNTED TO TOWER
9. (NOT USED)
10. AIS6 CABLE PART NO. ATCB-B01-010
11. GROUND BAR MOUNTED TO TOWER
12. GROUND BAR MOUNTED ON CHERRY INSULATORS
13. COAX GROUND KIT
14. JUMPER, 1/2"ø x 12'
15. GROUND TERMINATION BAR ON CHERRY INSULATORS
16. #2 Cu SOLID TINNED GROUND WIRE

NOTES:

1. FOR EVERYTHING ABOVE THE TOWER BOTTOM BUSS BAR USE SINGLE HOLE LUG WITH HEAT SHRINK ON ANTENNA, TMA, TMA FILTER & 2 HOLE LUG WITH HEAT SHRINK ON BUSS BAR END OF GROUND WIRE.
2. ALL GROUND CONNECTIONS STARTING AT THE TOWER BOTTOM BUSS BAR AND DOWN ARE TO BE EXOTHERMIC WELD OR 2 HOLE CADWELD LUG.
3. NUMBER OF ANTENNAS AND LINES TO BE INSTALLED SHALL BE AS DIRECTED BY THE CONSTRUCTION MANAGER.
4. GROUNDING OF ANTENNAS, MOUNTS, COAX, AND EQUIPMENT SHALL BE IN ACCORDANCE WITH T-MOBILE'S SPECIFICATIONS.

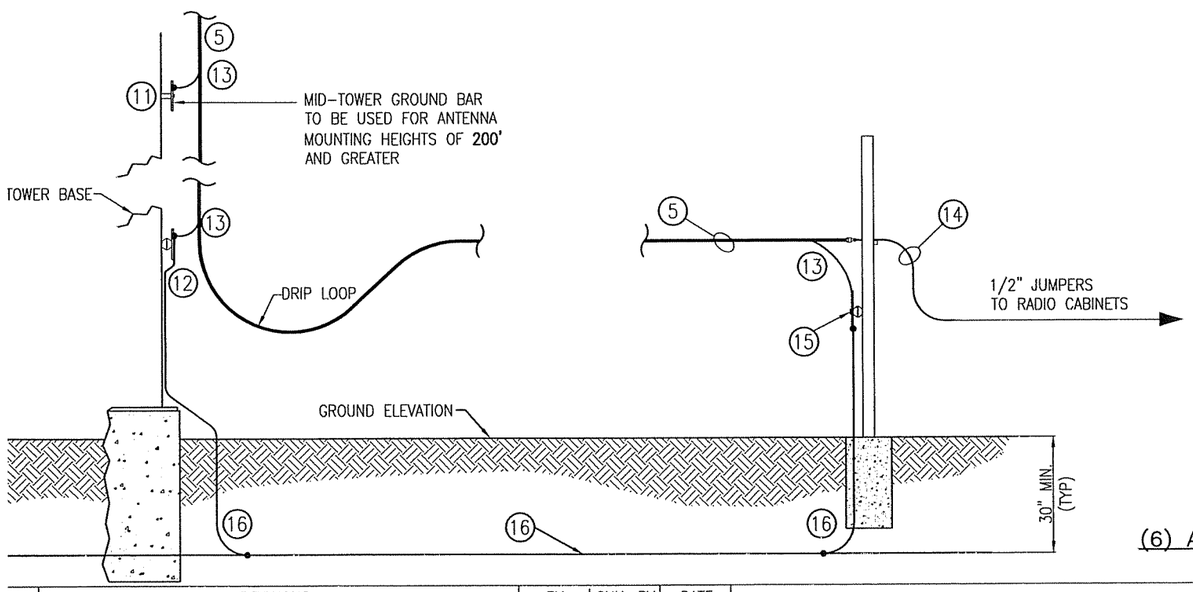

(6) ANTENNA AND (12) COAX GROUNDING DETAIL

(NOT TO SCALE)

STATE OF KENTUCKY
TIMOTHY L. HARDY
20374
REGISTERED PROFESSIONAL ENGINEER

12/2/8

REGISTERED PROFESSIONAL ENGINEER SEAL

M	REVISIONS	BY	CHK. BY	DATE

DRAWN BY: S.E. WOMACK DATE: 11-17-08
CHECKED BY: T.L. HARDY DATE: 11-17-08
APPROVED BY: DATE:

HARDY ENGINEERING, INC.
ENGINEERING AND CONSULTING
209 LINDEN STREET, P.O. BOX 708
TRUSSVILLE, AL 35173
PHONE: (205) 655-1427 FAX: (205) 661-9027

DWG NAME: ANTENNA & COAX GROUNDING DETAIL
STANDARD DRAWING
FOR
POWERTEL / MEMPHIS, INC.
LOUISVILLE, KENTUCKY

CAD No: LV0711_C3 | SCALE: AS SHOWN | DWG No: C3

T-MOBILE APPROVED 10-11-2007

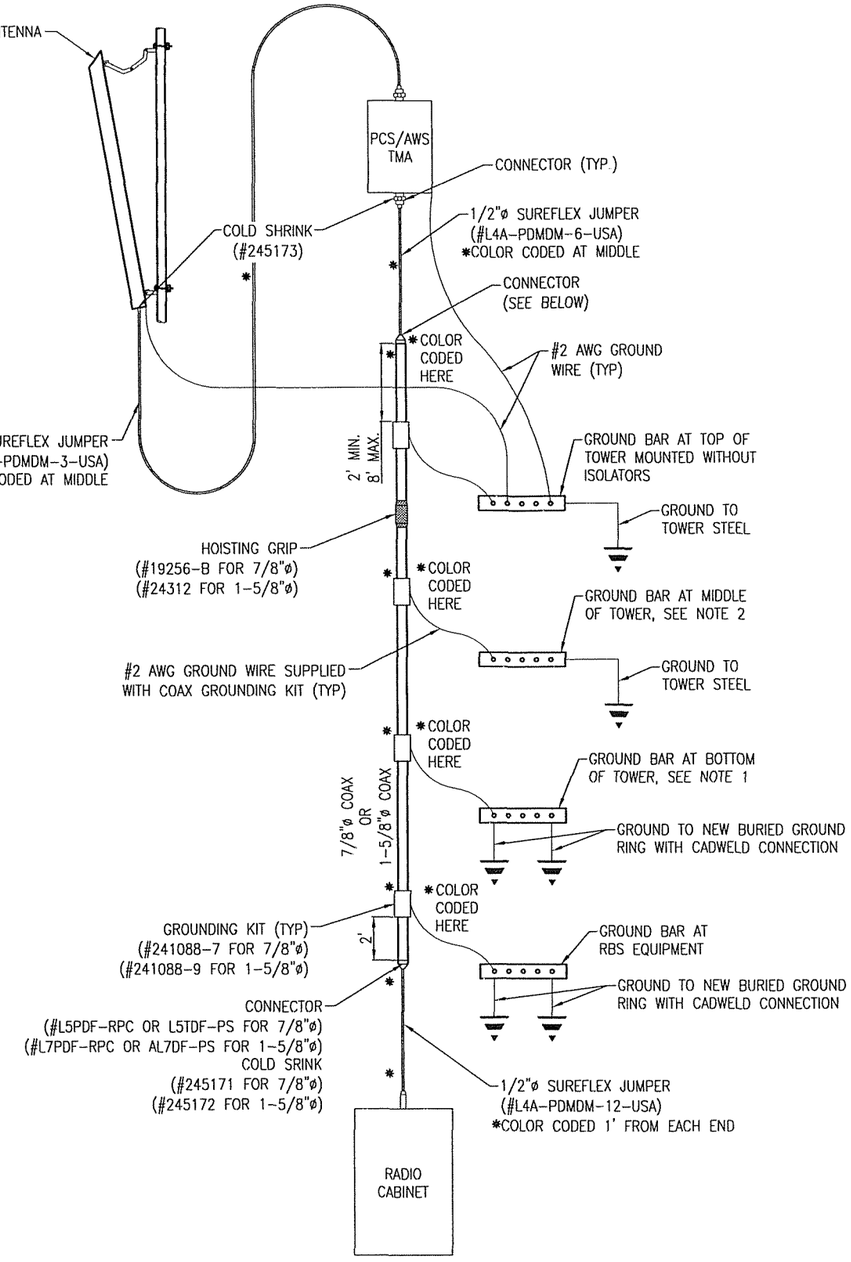

ANTENNA CABLE GROUNDING SCHEMATIC

(NOT TO SCALE)

NOTES

1. ATTACH GROUND BAR TO THE EXISTING TOWER USING STANDARD ADAPTER (ISOLATORS).
2. ATTACH GROUND BAR TO THE EXISTING TOWER USING STANDARD ADAPTER (WITHOUT ISOLATORS). INSTALL ONLY WHEN RAD CENTERS EXCEEDS 200'. (SELF SUPPORT & GUYED TOWERS ONLY)

STATE OF KENTUCKY
TIMOTHY L. HARDY
20374
REGISTERED PROFESSIONAL ENGINEER

12/2/8

REGISTERED PROFESSIONAL ENGINEER SEAL

ITEM	REVISIONS	BY	CHK. BY	DATE

DRAWN BY: J.E. STEGER DATE: 11-06-08

CHECKED BY: T.L. HARDY DATE: 11-06-08

APPROVED BY: DATE:

HARDY ENGINEERING, INC.
ENGINEERING AND CONSULTING
209 LINDEN STREET, P.O. BOX 708
TRUSSVILLE, AL 35173
PHONE: (205) 655-1427 FAX: (205) 661-9027

DWG. NAME: COAX GROUNDING DETAIL

STANDARD DRAWING FOR POWERTEL / MEMPHIS, INC. LOUISVILLE, KENTUCKY

CAD No: LV0711_C3.1 SCALE: AS SHOWN DWG. No. C3.1

REVISED 11-26-2008

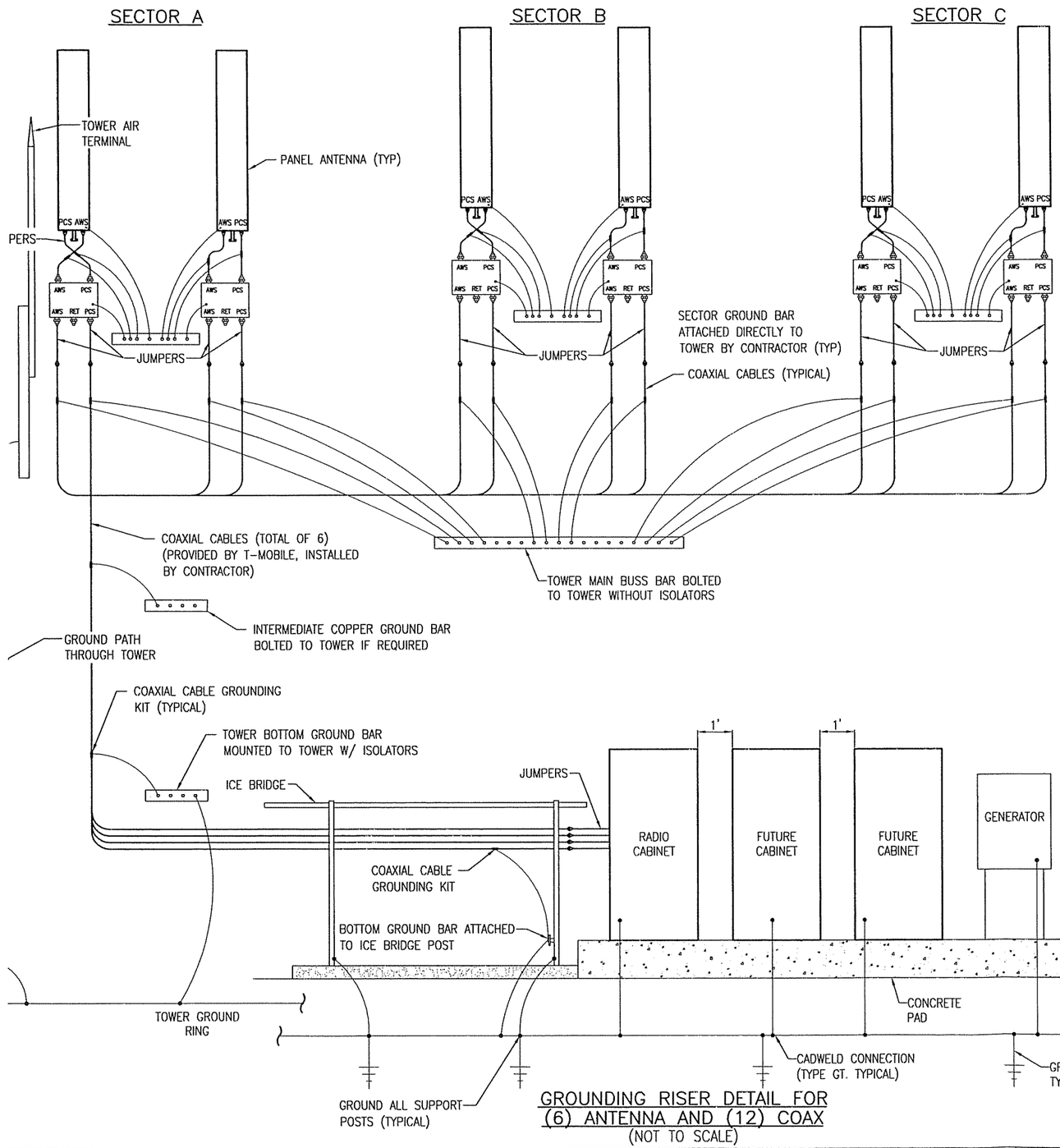

GROUNDING RISER DETAIL FOR (6) ANTENNA AND (12) COAX
(NOT TO SCALE)

GENERAL GROUNDING NOTES

1. SITE GROUNDING SHALL COMPLY WITH POWERTEL GROUNDING STANDARDS, LATEST ADDITION, AND COMPLY WITH POWERTEL GROUNDING CHECKLIST, LATEST VERSION. WHEN LOCAL AND NATIONAL GROUNDING CODES ARE MORE STRINGENT THEY SHALL GOVERN. GROUNDING SHALL BE COMPLETED BEFORE ERECTION OF TOWER.

2. GROUND RODS
   A. 5/8"x10" LONG COPPER CLAD STEEL.
   B. MAXIMUM SPACING 10'-0".
   C. TOP SHALL BE A MINIMUM OF 30" BELOW GRADE.

   GROUND CONNECTORS
   A. #2 AWG BARE TINNED SOLID COPPER UNLESS OTHERWISE NOTED.
   B. WHEN DIRECTION OF CONDUCTOR CHANGES, IT SHALL BE DONE GRADUALLY.
   C. ALL GROUNDING CONDUCTORS SHALL RUN THROUGH SEAL TIGHT SLEEVES WHEREVER CONDUCTORS RUN THROUGH CONCRETE SLABS.
   D. GROUND RINGS SHALL BE BURIED A MINIMUM OF 30" BELOW GRADE AND SHALL BE LOCATED A MINIMUM OF 24" FROM THE OUTSIDE EDGE OF A CABINET, TOWER FOUNDATION AND OTHER SITE OBJECTS.
   E. ALL CONNECTIONS SHALL BE EXOTHERMIC (CADWLD OR EQUAL) UNLESS INDICATED OTHERWISE. ALL MATERIALS USED SHALL BE INSTALLED PER MANUFACTURERS RECOMMENDATIONS AND INSTRUCTIONS.
   F. CONNECTIONS AT GROUND BARS AND SERVICE DISCONNECTION MEANS SHALL CONSIST OF LUGS CADWELDED TO GROUND CONDUCTORS UNLESS INDICATED OTHERWISE. LUGS SHALL BE ATTACHED TO GROUND BARS USING STAINLESS STEEL OR HOT DIPPED GALVANIZED STEEL BOLTS, NUTS AND LOCK WASHERS.

   COAXIAL TRANSMISSION LINE GROUNDING
   A. VERTICAL RUNS THAT ARE MORE THAN 200' OR LESS SHALL REQUIRE A GROUNDING KIT AT THE TOP AND BOTTOM OF THE TOWER.
   B. VERTICAL RUNS WHICH ARE GREATER THAN 200' SHALL REQUIRE A GROUNDING KIT (IN ADDITION TO THE ABOVE) FROM THE TOP EVERY 150' TOWARDS THE GROUND BAR UNTIL THE DISTANCE IS LESS THAN 150' FROM THE GROUND.
   C. SURGE ARRESTOR IS PROVIDED BY OTHERS AND INSTALLED BY CONTRACTOR. CONTRACTOR SHALL MAKE ALL CONNECTIONS REQUIRED FOR INSTALLATION.
   D. ALL GROUNDING KITS SHALL BE PROVIDED BY OTHERS AND INSTALLED BY CONTRACTOR.

   MISC. ITEMS TO BE CONNECTED TO GROUNDING SYSTEM
   A. ANY METAL FENCE POST WITHIN 6'-0" OF GROUND ROAD.
   B. TRANSMISSION LINE ENTRANCE HATCH.
   C. METAL CABINET PARTS NOT GROUNDED BY THE INTERNAL GROUND RING.
   D. METAL FUEL STORAGE TANKS.
   E. ANY SIGNIFICANT METAL OBJECT WITHIN 6'-0" OF THE GROUNDING SYSTEM OR ANY OTHER GROUNDED OBJECT.
   F. EXTERIOR ICE SHIELDS.
   G. STEEL EQUIPMENT PLATFORM.

   INSTALLATION AND TESTING
   A. CONTRACTOR SHALL NOTIFY CONSTRUCTION MANAGER IMMEDIATELY IF THERE ARE ANY DIFFICULTIES INSTALLING GROUNDING SYSTEM DUE TO FIELD CONDITIONS.
   B. CONTRACTOR SHALL NOT COVER UP GROUND RING AND CONNECTIONS UNTIL AN INSPECTION HAS BEEN PERFORMED. COORDINATE INSPECTION WITH CONSTRUCTION MANAGER.
   C. PROVIDE TESTING OF GROUNDING SYSTEM AS DIRECTED BY THE CONSTRUCTION MANAGER.

   THE MAXIMUM ALLOWABLE RESISTANCE READING SHALL BE 5 OHMS TO THE GROUND. IF THE RESISTANCE OF THE ENTIRE GROUND SYSTEM AS MEASURED AT THE MAIN GROUND TEST WELL EXCEEDS 5.0 OHMS THE ELECTRICAL CONTRACTOR AND OWNERS REPRESENTATIVE SHALL BE NOTIFIED SO THAT ADDITIONAL GROUND LOCATIONS CAN BE UTILIZED.

   ALL EXPOSED GROUND LEADS TO GROUND RING, PLACED IN CONCRETE, SHALL BE ENCASED IN 3/4" FLEXIBLE CONDUIT, SEALTIGHT OR EQUAL.

   ALL GROUND WIRE CONNECTIONS TO EQUIPMENT GROUND RING THAT ARE RUNNING ABOVE GROUND SHALL BE RUN INSIDE SEALTIGHT FLEX CONDUIT.

   ALL CONNECTIONS ABOVE GROUND EXCEPT CONNECTIONS TO GROUND BARS OR ARRESTOR BRACKET SHALL BE WITH DOUBLE LUG CONNECTORS. CONNECTIONS TO GROUND BARS AND ARRESTORS SHALL BE CADWELD.

   ALL GROUNDING RUNS ON TOWER SHALL BE ROUTED ON THE INSIDE FACE OF THE ICE BRIDGE LADDER.

   COMPACT BACKFILL OF ALL TRENCHES FOR GROUND RING. SITE SOIL OR #57 STONE MAY BE USED FOR BACKFILL MATERIALS. CONTRACTOR SHALL OBTAIN APPROVAL FOR BACKFILL MATERIALS FROM CONSTRUCTION MANAGER.

   CONTRACTOR SHALL PROVIDE SS FLAT AND LOCK WASHERS AS REQUIRED FOR COMPLETE INSTALLATION OF GROUND LEADS AT GROUND BUSS.

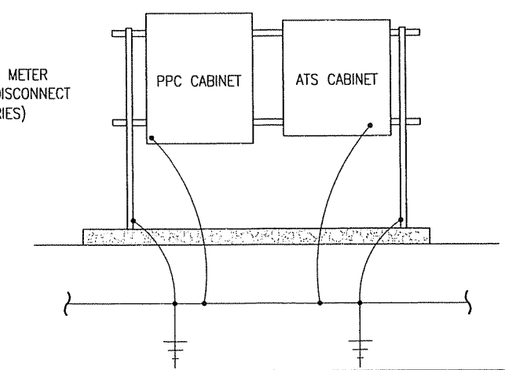

STATE OF KENTUCKY
TIMOTHY L. HARDY
20374
REGISTERED PROFESSIONAL ENGINEER
12/2/8
REGISTERED PROFESSIONAL ENGINEER SEAL

EM	REVISIONS	BY	CHK. BY	DATE

DRAWN BY: S.E. WOMACK DATE: 11-17-08
CHECKED BY: T.L. HARDY DATE: 11-17-08
APPROVED BY: DATE:

HARDY ENGINEERING, INC.
ENGINEERING AND CONSULTING
209 LINDEN STREET, P.O. BOX 708
TRUSSVILLE, AL 35173
PHONE: (205) 655-1427 FAX: (205) 661-9027

DWG. NAME: GROUNDING RISER DIAGRAM
STANDARD DRAWING
FOR
POWERTEL / MEMPHIS, INC.
LOUISVILLE, KENTUCKY

CAD No: LV0711_3.2 | SCALE: NOT TO SCALE | DWG. No C3.2

NOTES

1. ALL CONDUIT SHALL BE PVC CONDUIT UNLESS OTHERWISE NOTED.
2. ALL CONDUIT PENETRATING EQUIPMENT PANELS SHALL BE SECURED WITH A GROUNDING BUSHING AND GROUNDED TO EQUIPMENT GROUND BUSS WITH A GROUND LUG.
3. ALL CONDUITS TO BE SECURED WITH CONDUIT BEAM CLAMP O-Z / GEDNEY TYPE "J".
4. PROVIDE A SMOOTH TRANSITION AND DRIP LOOP.
5. ANTENNA END OF 1 5/8"ø COAX SHALL BE SUPPORTED NO MORE THAN 1 FOOT FROM END OF CONNECTOR.
6. 1/2"ø COAX SHALL BE SUPPORTED EVERY 2'-0" TO 2'-6" WITH ANGLE ADAPTORS WITH CLAMP OR EQUIVALENT.

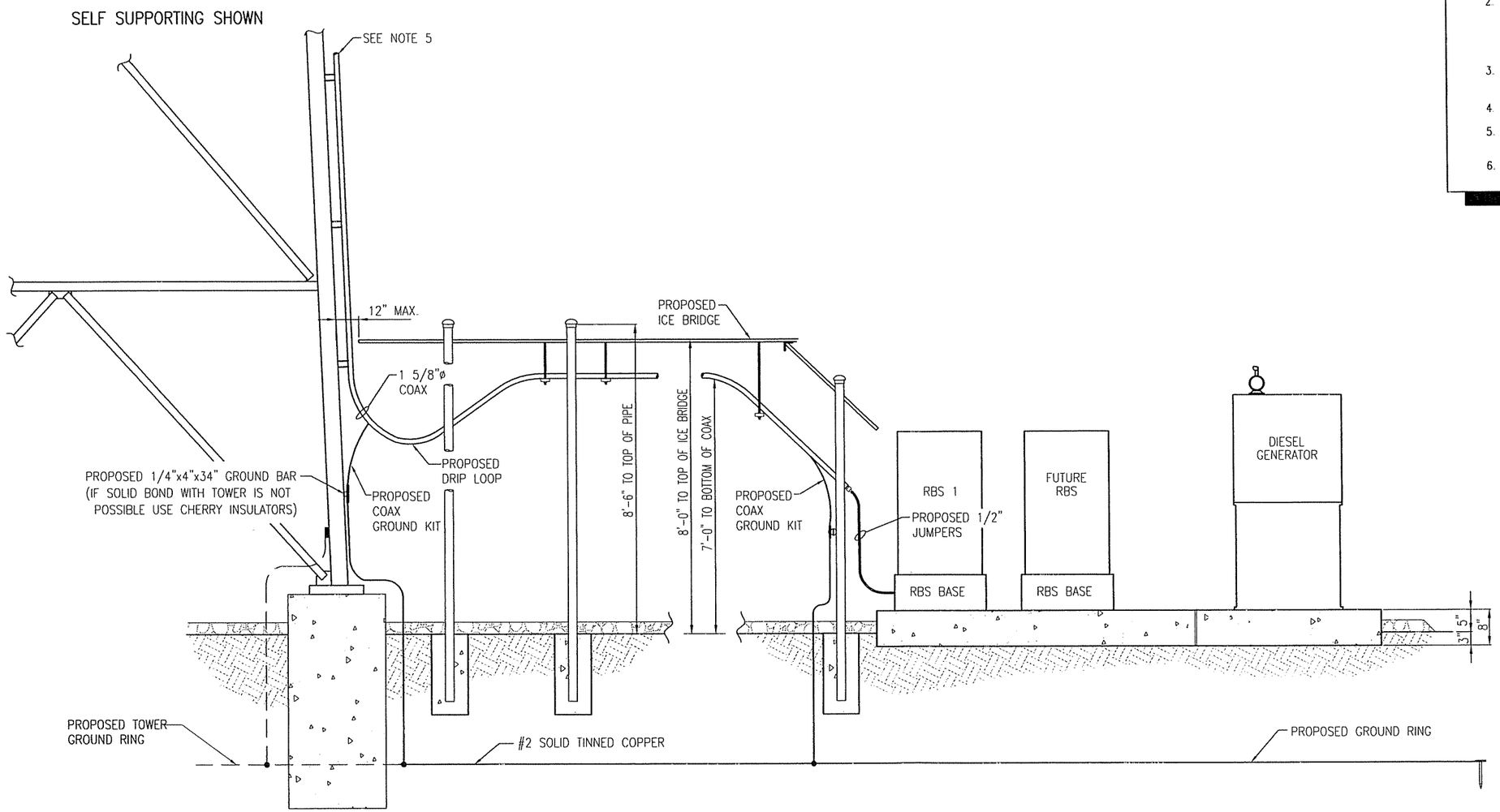

EQUIPMENT ELEVATION

STATE OF KENTUCKY
TIMOTHY L. HARDY
20374
REGISTERED PROFESSIONAL ENGINEER

12/2/8

REGISTERED PROFESSIONAL ENGINEER SEAL

ITEM	REVISIONS	BY	CHK. BY	DATE

DRAWN BY: J.E. STEGER — DATE: 11-06-08
CHECKED BY: T.L. HARDY — DATE: 11-06-08
APPROVED BY: — DATE:

HARDY ENGINEERING, INC.
ENGINEERING AND CONSULTING
209 LINDEN STREET, P.O. BOX 708
TRUSSVILLE, AL 35173
PHONE: (205) 655-1427 FAX: (205) 661-9027

DWG. NAME: EQUIPMENT ELEVATION

STANDARD DRAWING
FOR
POWERTEL / MEMPHIS, INC.
LOUISVILLE, KENTUCKY

CAD No: LV0711_C4 | SCALE: NOT TO SCALE | DWG. No: C4

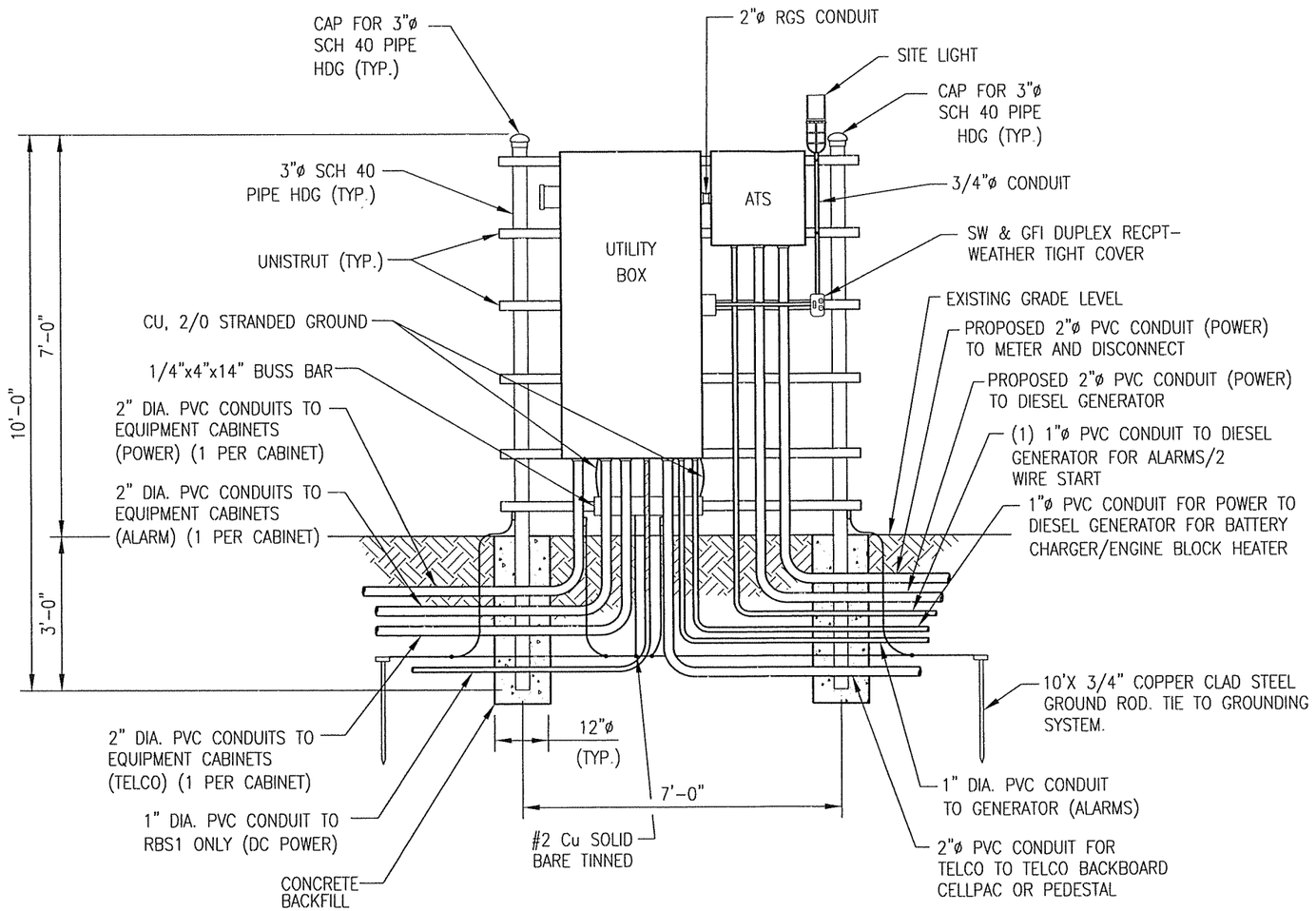

UTILITY BOX & ATS SERVICE RACK

SCALE: N.T.S.

STATE OF KENTUCKY
TIMOTHY L. HARDY
20374
REGISTERED PROFESSIONAL ENGINEER

12/2/8

REGISTERED PROFESSIONAL ENGINEER SEAL

EM	REVISIONS	BY	CHK. BY	DATE

DRAWN BY: J.E. STEGER	DATE: 10-15-08
CHECKED BY: T.L. HARDY	DATE: 10-15-08
APPROVED BY:	DATE:

HARDY ENGINEERING, INC.

ENGINEERING AND CONSULTING
209 LINDEN STREET
TRUSSVILLE, AL 35173
PHONE: (205) 655-1427 FAX: (205) 661-9027

DWG NAME: ELECTRICAL DETAILS

STANDARD DRAWING
FOR
POWERTEL / MEMPHIS, INC.
LOUISVILLE, KENTUCKY

CAD No: NV0711_C5 | SCALE: AS SHOWN | DWG No: C5

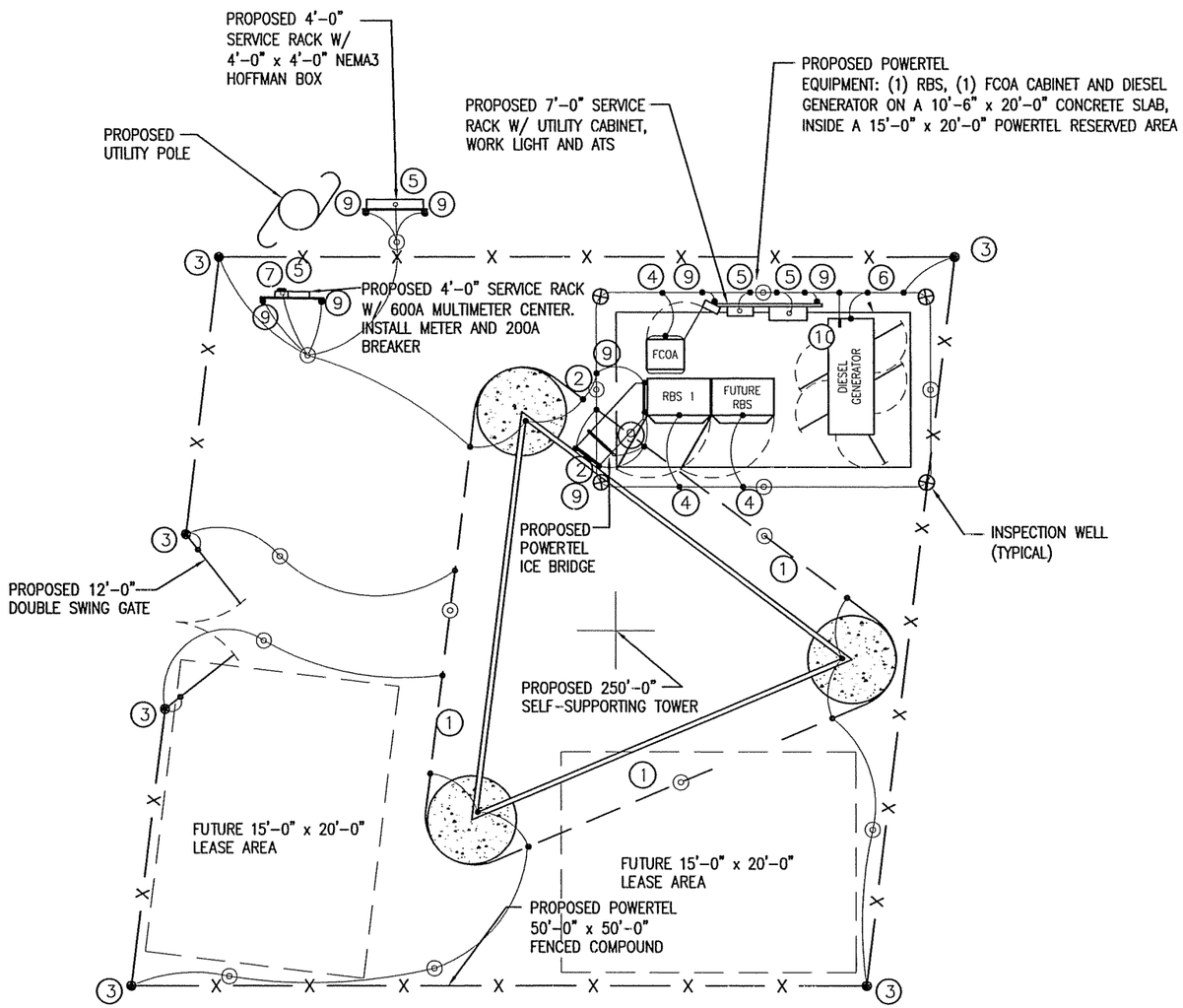

GROUNDING LAYOUT

(SCALE: 1" = 10'-0")

GENERAL NOTES:

1. GROUND RING TO EARTH SHALL BE 5 OHMS OR LESS. ADDITIONAL GROUND RODS MAY HAVE TO BE ADDED TO THE INITIAL 3/4"x10' RODS. USE TEMPORARY BOLTED CONNECTION TO ROD AND PERFORM GROUND RESISTANCE TEST.
2. ALL GROUNDING CONDUCTOR SWEEPS SHALL BE SMOOTH WITH NO SHARP BENDS (8" MIN. BEND RADIUS). SWEEPS SHALL BE CAD-WELDED TO GROUND RING WITH PARALLEL CADWELD.
3. ALL CADWELDS TO BURIED GROUND RING SHALL BE OF PARALLEL TYPE. NO "TEE" CONNECTIONS TO BE USED.
4. USE DE-OX OR NOALOX COMPOUND BETWEEN ALL GROUNDING LUG CONNECTIONS. DO NOT COVER LUGS OR HARDWARE WITH COMPOUND.
5. ALL MOUNTING & CONNECTING HARDWARE FOR GROUNDING TO BE STAINLESS STEEL ONLY, NO PLATED OR GALVANIZED HARDWARE IS TO BE USED.
6. GROUNDING CONDUCTORS TO BE BURIED A MINIMUM OF 30" DEEP UNLESS OTHERWISE SPECIFIED BY LOCAL CODE.
7. ALL GROUNDING CONDUCTORS TO BE BARE STRANDED, SOFT DRAWN COPPER UNLESS OTHERWISE SPECIFIED.
8. USE ONLY 2-HOLE CADWELD LUGS ON ENDS OF GROUNDING CONDUCTORS. DO NOT USE COMPRESSION OR MECHANICAL TYPE LUGS.

CALL-OUT NOTES:

1. PROPOSED TOWER STRUCTURE GROUND RING, CONTRACTOR TO VERIFY.
2. CONNECT EXISTING TOWER RING GROUND TO EQUIPMENT RING GROUND ON BOTH SIDES. KEEP INTERCONNECTING WIRING OF EQUAL LENGTH AND TYPE.
3. FENCE GROUND
4. RBS GROUND, TYP. 2 PLACES, MAIN RBS AND FUTURE. INSTALL: CONTRACTOR TO SUPPLY AND INSTALL LUG IN RBS (2106) AND ATTACH TO #2 STRAND COPPER TYPE THHN (GREEN) WIRE TO CONNECT RBS TO EXTERNAL GROUND RING. REMOVE INSULATION BELOW GRADE.
5. ELECTRICAL AND TELCO EQUIPMENT BUSS BARS.
6. REMOVE PAINT FROM SURFACE OF GENERATOR FRAME BEFORE ATTACHING GROUND CONNECTION. USE DE-OX COMPOUND BETWEEN FRAME AND LUG. AFTER TIGHTENING CONNECTION COVER AREA WITH SPRAY ZINC OR COLD GALVANIZING COMPOUND.
7. NEUTRAL – GROUND BOND AT SERVICE DISCONNECT.
8. MINIMUM SPACING OF SLED GROUNDING FROM SLED FOUNDATION, 24 INCHES MIN.
9. ICE BRIDGE & SERVICE BOARD POST GROUND, EACH POST TYP.
10. FUEL TANK GROUND

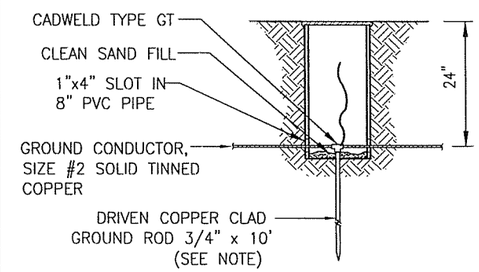

INSPECTION WELL DETAIL

VERIFY WITH PROJECT MANAGER FOR NUMBER AND LOCATIONS

LEGEND

- EXISTING TOWER GROUND RING
- #2 SOLID TINNED COPPER GROUND CONDUCTOR UNLESS OTHERWISE SPECIFIED.
- EXOTHERMIC WELD CONNECTION
- 3/4" x 10' COPPER CLAD STEEL GROUND ROD UNLESS OTHERWISE SPECIFIED.
- #2 SOLID TINNED COPPER FROM EQUIPMENT OR STEEL TO GROUND RING UNLESS OTHERWISE SPECIFIED

PORTIONS OF SITE LAYOUT HAVE BEEN REMOVED FOR CLARITY. REFER TO SHEET C1 FOR COMPLETE SITE LAYOUT

NOTE: CONTRACTOR TO VERIFY ALL PROPOSED UTILITIES BEFORE DIGGING

STATE OF KENTUCKY
TIMOTHY L. HARDY
20374
REGISTERED PROFESSIONAL ENGINEER

12/2/08

REGISTERED PROFESSIONAL ENGINEER SEAL

EM	REVISIONS	BY	CHK. BY	DATE

DRAWN BY: J.E. STEGER	DATE: 11-06-08	HARDY ENGINEERING, INC.	DWG. NAME: GROUNDING LAYOUT
CHECKED BY: T.L. HARDY	DATE: 11-06-08	ENGINEERING AND CONSULTING 209 LINDEN STREET TRUSSVILLE, AL 35173 PHONE: (205) 655-1427 FAX: (205) 661-9027	9LV0711A SITE: JARVIS ~~ROAD~~ GREENVILLE, KENTUCKY FOR POWERTEL / MEMPHIS, INC. LOUISVILLE, KENTUCKY
APPROVED BY:	DATE:		CAD No: LV0711_C6 · SCALE: AS SHOWN · DWG No: C6

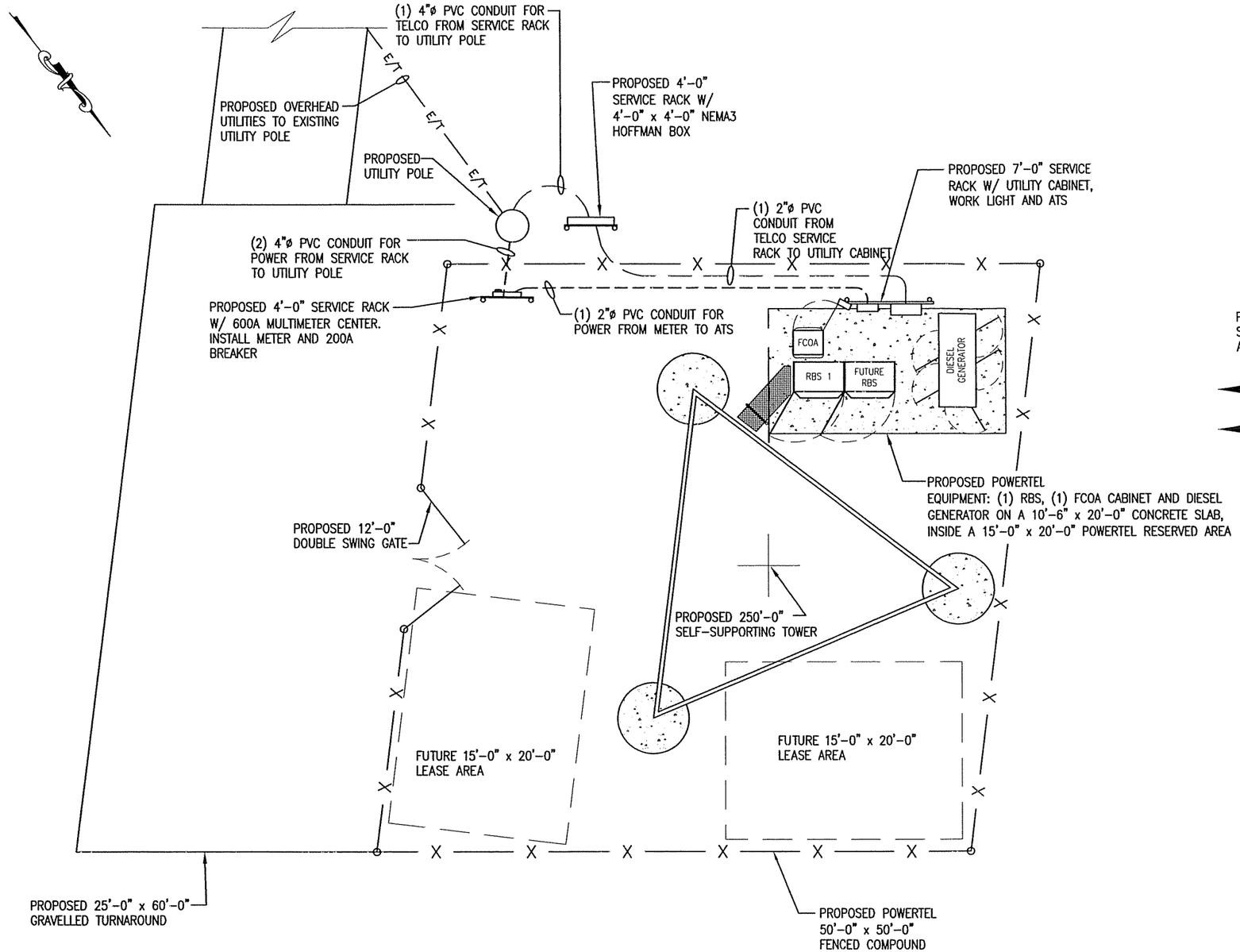

ELECTRICAL CONDUIT LAYOUT
(SCALE: 1" = 10'-0")

NOTES:

1. THIS INSTALLATION SHALL CONFORM TO THE NATIONAL ELECTRICAL CODE AND ANY APPLICABLE LOCAL CODES AND ORDINANCES. SEE LOCAL AUTHORITIES FOR ANY REQUIREMENTS BEYOND THESE LISTED.
2. CONTRACTOR SHALL PROVIDE ALL MATERIALS NECESSARY FOR 200 AMP SERVICE.
3. THE LOCAL UTILITY WILL MAKE THE SERVICE CONNECTIONS.
4. CONTRACTOR TO INSTALL 8 PAIR, 24 GAUGE, (16 WIRES) FOR ALARMS.

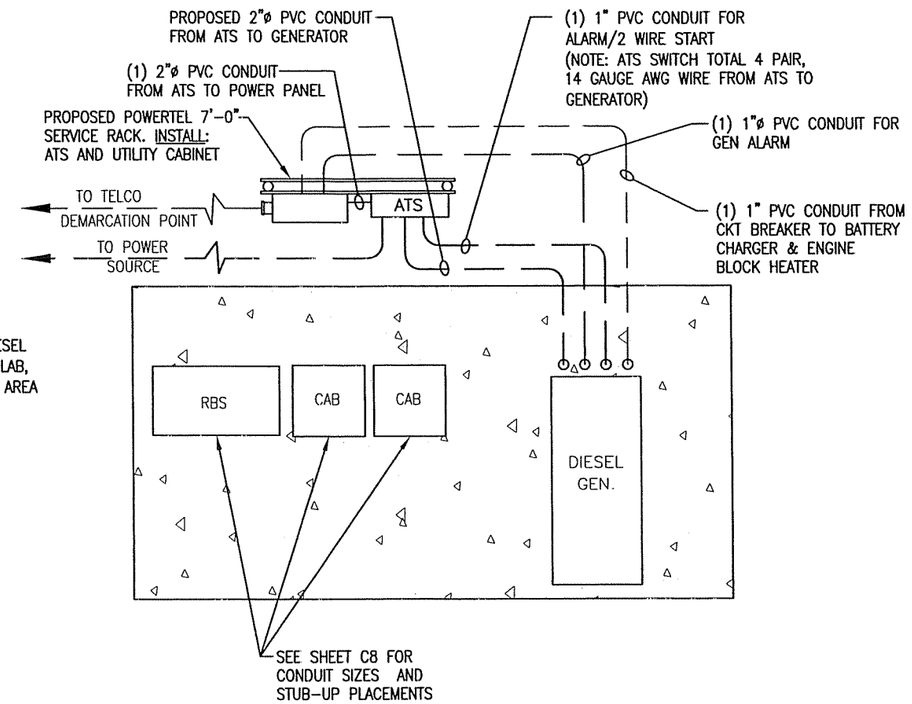

CONDUIT LAYOUT DETAIL
(N.T.S.)

NOTE: CONTRACTOR TO VERIFY ALL EXISTING UTILITIES BEFORE DIGGING

NOTE:
BOUNDARY AND SITE FEATURES ARE BASED ON FIELD MEASUREMENTS. CONTRACTOR SHALL IMMEDIATELY NOTIFY THE ENGINEER OF ANY DISCREPANCIES BETWEEN ACTUAL FIELD CONDITIONS AND THIS DRAWING.

STATE OF KENTUCKY
TIMOTHY L. HARDY
20374
REGISTERED PROFESSIONAL ENGINEER
12/2/8
REGISTERED PROFESSIONAL ENGINEER SEAL

EM	REVISIONS	BY	CHK. BY	DATE

DRAWN BY: J.E. STEGER DATE: 11-06-08
CHECKED BY: T.L. HARDY DATE: 11-06-08
APPROVED BY DATE:

HARDY ENGINEERING, INC.
ENGINEERING AND CONSULTING
209 LINDEN STREET, P.O. BOX 708
TRUSSVILLE, AL 35173
PHONE: (205) 655-1427 FAX: (205) 661-9027

DWG NAME: ELECTRICAL CONDUIT LAYOUT
9LV0711A SITE: JARVIS ~~ROAD~~
GREENVILLE, KENTUCKY
FOR
POWERTEL / MEMPHIS, INC.
LOUISVILLE, KENTUCKY

CAD No: LV0711_C7 SCALE: AS SHOWN DWG No C7

PANEL MOUNTING
200 AMP MAIN BREAKER 10 KAIC

PANEL PNL

200 AMP BUS
120 / 240 VOLT 1 PHASE 3 WIRE

CIRCUIT NUMBER	DIRECTORY	VA ØA	VA ØB	DEVICE MISC	DEVICE R'CEPT	DEVICE LTG	BKR TRIP	BKR POLE	PHASE A B	BKR POLE	BKR TRIP	DEVICE LTG	DEVICE R'CEPT	DEVICE MISC	VA ØA	VA ØB	DIRECTORY	CIRCUIT NUMBER
1	TVSS SURGE PROTECTOR	0					60	2		1	15				400		INSIDE & OUTSIDE GFI R'CEPT	2
3			0														SPARE	4
5	COOLING FAN	200					10	1		2	50							6
7	OUTSIDE LIGHT		400				20	1									SPARE	8
9	BLANK									2	50							10
11	BLANK																BLANK	12
13	BLANK																BLANK	14
15	BLANK																BLANK	16
17	BLANK																BLANK	18
19	BLANK																BLANK	20
21	BLANK																BLANK	22
23	BLANK																BLANK	24
25	BLANK																BLANK	26
27	BLANK																BLANK	28
29	BLANK																BLANK	30
		200	400												400	0		

CONNECTED LOAD (VA)
PHASE A 600
PHASE B 400

TOTAL CONNECTED LOAD = 1.0 KVA = 4.2 AMPS

CASE 1 – 0 CABINETS INSTALLED

PANEL MOUNTING
200 AMP MAIN BREAKER 10 KAIC

PANEL PNL

200 AMP BUS
120 / 240 VOLT 1 PHASE 3 WIRE

CIRCUIT NUMBER	DIRECTORY	VA ØA	VA ØB	DEVICE MISC	DEVICE R'CEPT	DEVICE LTG	BKR TRIP	BKR POLE	PHASE A B	BKR POLE	BKR TRIP	DEVICE LTG	DEVICE R'CEPT	DEVICE MISC	VA ØA	VA ØB	DIRECTORY	CIRCUIT NUMBER
1	TVSS SURGE PROTECTOR	0					60	2		1	15				400		INSIDE & OUTSIDE GFI R'CEPT	2
3			0													4800	RBS-1	4
5	COOLING FAN	200					10	1		2	50				4800			6
7	OUTSIDE LIGHT		400				20	1								4800	SPARE	8
9	BLANK									2	50							10
11	BLANK																BLANK	12
13	BLANK																BLANK	14
15	BLANK																BLANK	16
17	BLANK																BLANK	18
19	BLANK																BLANK	20
21	BLANK																BLANK	22
23	BLANK																BLANK	24
25	BLANK																BLANK	26
27	BLANK																BLANK	28
29	BLANK																BLANK	30
		200	400												5200	4800		

CONNECTED LOAD (VA)
PHASE A 5400
PHASE B 5200

TOTAL CONNECTED LOAD = 10.6 KVA = 44.2 AMPS

CASE 2 – 1 CABINET INSTALLED

PANEL MOUNTING
200 AMP MAIN BREAKER 10 KAIC

PANEL PNL

200 AMP BUS
120 / 240 VOLT 1 PHASE 3 WIRE

CIRCUIT NUMBER	DIRECTORY	VA ØA	VA ØB	DEVICE MISC	DEVICE R'CEPT	DEVICE LTG	BKR TRIP	BKR POLE	PHASE A B	BKR POLE	BKR TRIP	DEVICE LTG	DEVICE R'CEPT	DEVICE MISC	VA ØA	VA ØB	DIRECTORY	CIRCUIT NUMBER
1	TVSS SURGE PROTECTOR	0					60	2		1	15				400		INSIDE & OUTSIDE GFI R'CEPT	2
3			0													4800	RBS-1	4
5	COOLING FAN	200					10	1		2	50				4800			6
7	OUTSIDE LIGHT		400				20	1								4800	RBS-2	8
9	BLANK									2	50				4800			10
11	BLANK															4800	RBS-3	12
13	BLANK														4800			14
15	BLANK																BLANK	16
17	BLANK																BLANK	18
19	BLANK																BLANK	20
21	BLANK																BLANK	22
23	BLANK																BLANK	24
25	BLANK																BLANK	26
27	BLANK																BLANK	28
29	BLANK																BLANK	30
		200	400												10000	9600		

CONNECTED LOAD (VA)
PHASE A 10200
PHASE B 10000

TOTAL CONNECTED LOAD = 20.2 KVA = 84.2 AMPS

CASE 3 – 2 CABINETS INSTALLED

PANEL MOUNTING
200 AMP MAIN BREAKER 10 KAIC

PANEL PNL

200 AMP BUS
120 / 240 VOLT 1 PHASE 3 WIRE

CIRCUIT NUMBER	DIRECTORY	VA ØA	VA ØB	DEVICE MISC	DEVICE R'CEPT	DEVICE LTG	BKR TRIP	BKR POLE	PHASE A B	BKR POLE	BKR TRIP	DEVICE LTG	DEVICE R'CEPT	DEVICE MISC	VA ØA	VA ØB	DIRECTORY	CIRCUIT NUMBER
1	TVSS SURGE PROTECTOR	0					60	2		1	15				400		INSIDE & OUTSIDE GFI R'CEPT	2
3			0													4800	RBS-1	4
5	COOLING FAN	200					10	1		2	50				4800			6
7	OUTSIDE LIGHT		400				20	1								4800	RBS-2	8
9	BLANK									2	50				4800			10
11	BLANK															4800	RBS-3	12
13	BLANK														4800			14
15	BLANK																BLANK	16
17	BLANK																BLANK	18
19	BLANK																BLANK	20
21	BLANK																BLANK	22
23	BLANK																BLANK	24
25	BLANK																BLANK	26
27	BLANK																BLANK	28
29	BLANK																BLANK	30
		200	400												14800	14400		

CONNECTED LOAD (VA)
PHASE A 15000
PHASE B 14800

TOTAL CONNECTED LOAD = 29.8 KVA = 124.2 AMPS

CASE 4 – 3 CABINETS INSTALLED

STATE OF KENTUCKY
TIMOTHY L. HARDY
20374
REGISTERED PROFESSIONAL ENGINEER

12/2/8

REGISTERED PROFESSIONAL ENGINEER SEAL

ITEM	REVISIONS	BY	CHK. BY	DATE

DRAWN BY: S.E. WOMACK DATE: 11-06-08
CHECKED BY: T.L. HARDY DATE: 11-06-08
APPROVED BY: DATE:

HARDY ENGINEERING, INC.
ENGINEERING AND CONSULTING
209 LINDEN STREET, P.O. BOX 708
TRUSSVILLE, AL 35173
PHONE: (205) 655-1427 FAX: (205) 661-9027

DWG. NAME: PANEL BOARD CALCULATIONS
STANDARD DRAWING
FOR
POWERTEL / MEMPHIS, INC.
LOUISVILLE, KENTUCKY

CAD No: LV0711_C7.1 SCALE: AS SHOWN DWG. No. C7.1

CONDUIT SCHEDULE

CONDUIT	SIZE (IN.)	FROM	TO	DESCRIPTION
A	2"	GENERATOR	ATS	POWER
B	1"	GENERATOR	UTILITY BOX	BATTERY CHARGER / ENGINE BLOCK HEATER
C	1"	GENERATOR	ATS	ALARMS / 2 WIRE START
D	1"	GENERATOR	UTILITY BOX	ALARMS
E	2"	RADIO CABINET	UTILITY BOX	POWER
F	2"	RADIO CABINET	UTILITY BOX	25 PAIR CABLE / ALARMS
G	1"	RADIO CABINET	UTILITY BOX	ALARMS
H	1"	RADIO CABINET	UTILITY BOX	DC POWER

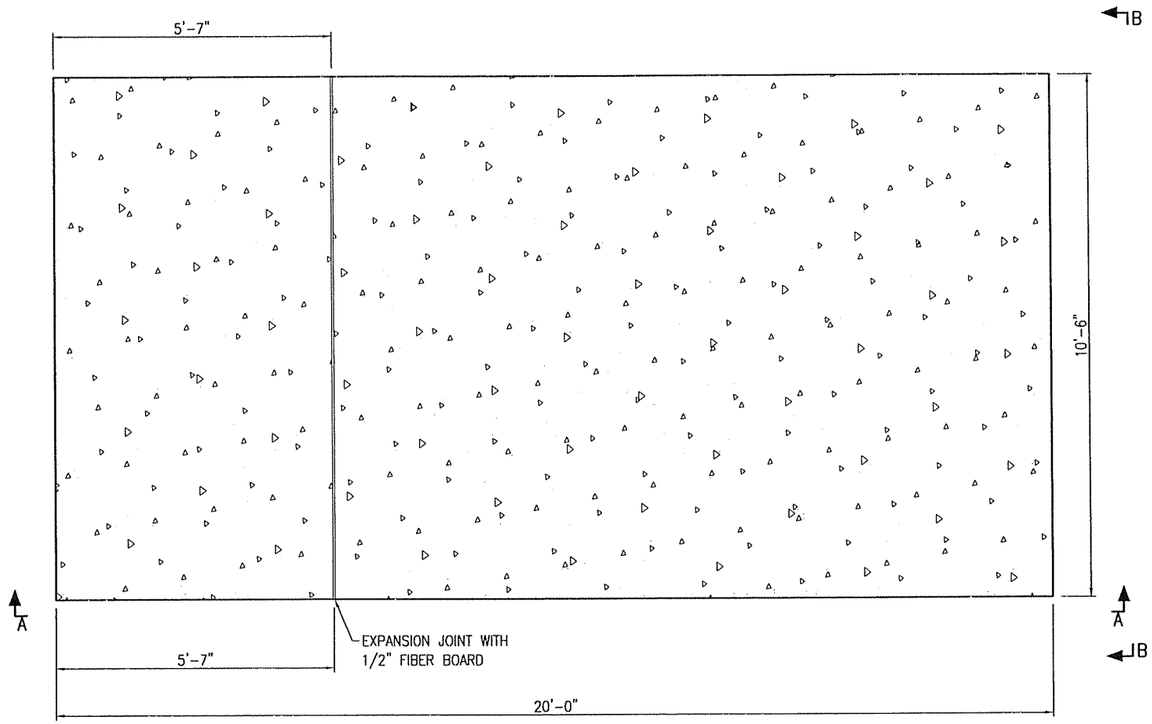

PLAN VIEW
(CONCRETE SLAB)

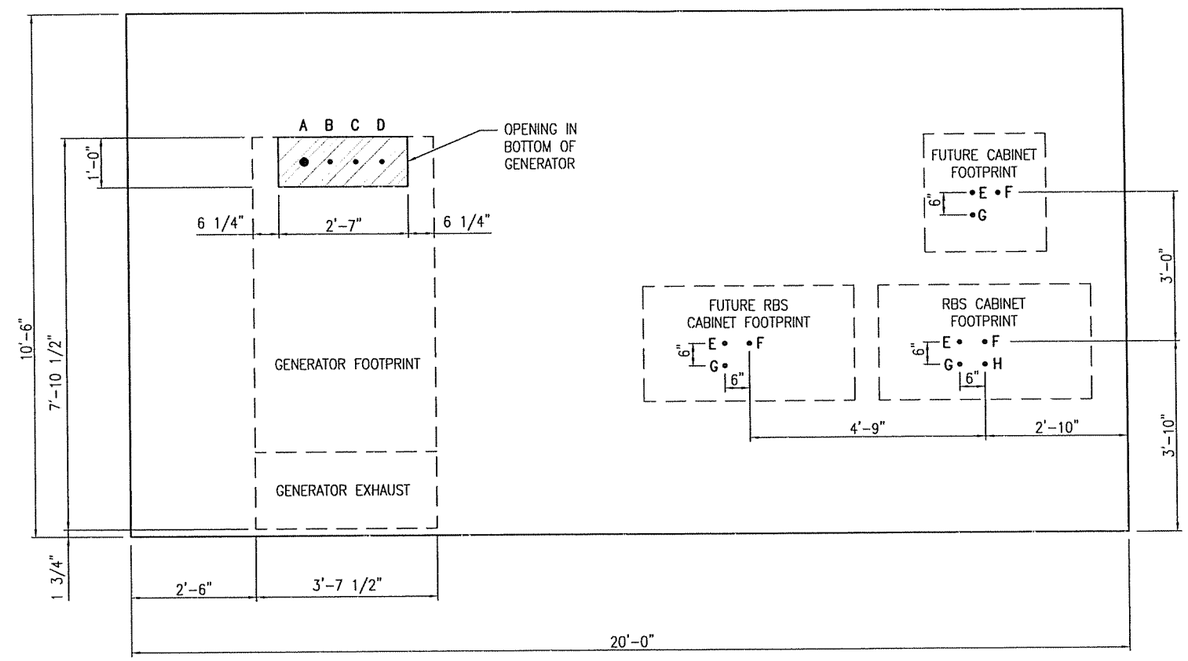

PLAN VIEW
(GENERATOR AND EQPT PAD)

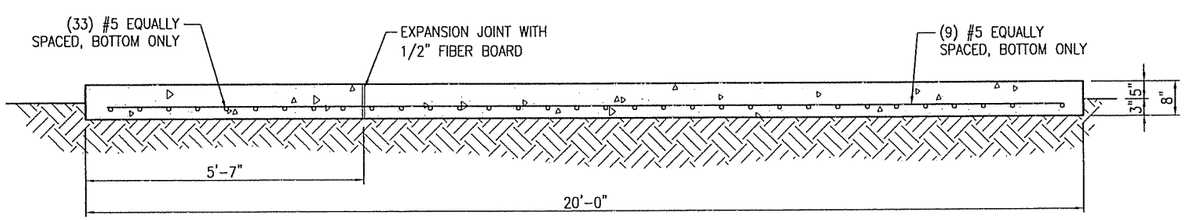

SECTION A–A

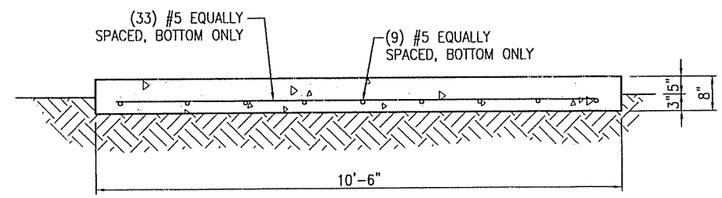

SECTION B–B

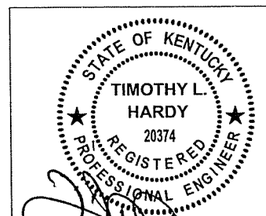

12/2/8

REGISTERED PROFESSIONAL ENGINEER SEAL

EM	REVISIONS	BY	CHK. BY	DATE

DRAWN BY: S.E. WOMACK DATE: 11–19–08
CHECKED BY: T.L. HARDY DATE: 11–19–08
APPROVED BY: DATE:

HARDY ENGINEERING, INC.
ENGINEERING AND CONSULTING
209 LINDEN STREET, P.O. BOX 708
TRUSSVILLE, AL 35173
PHONE: (205) 655-1427 FAX: (205) 661-9027

DWG. NAME: CONCRETE FOUNDATION DETAILS
STANDARD DRAWING
FOR
POWERTEL / MEMPHIS, INC.
LOUISVILLE, KENTUCKY

CAD No: NV0711_C8 SCALE: NONE DWG No: C8

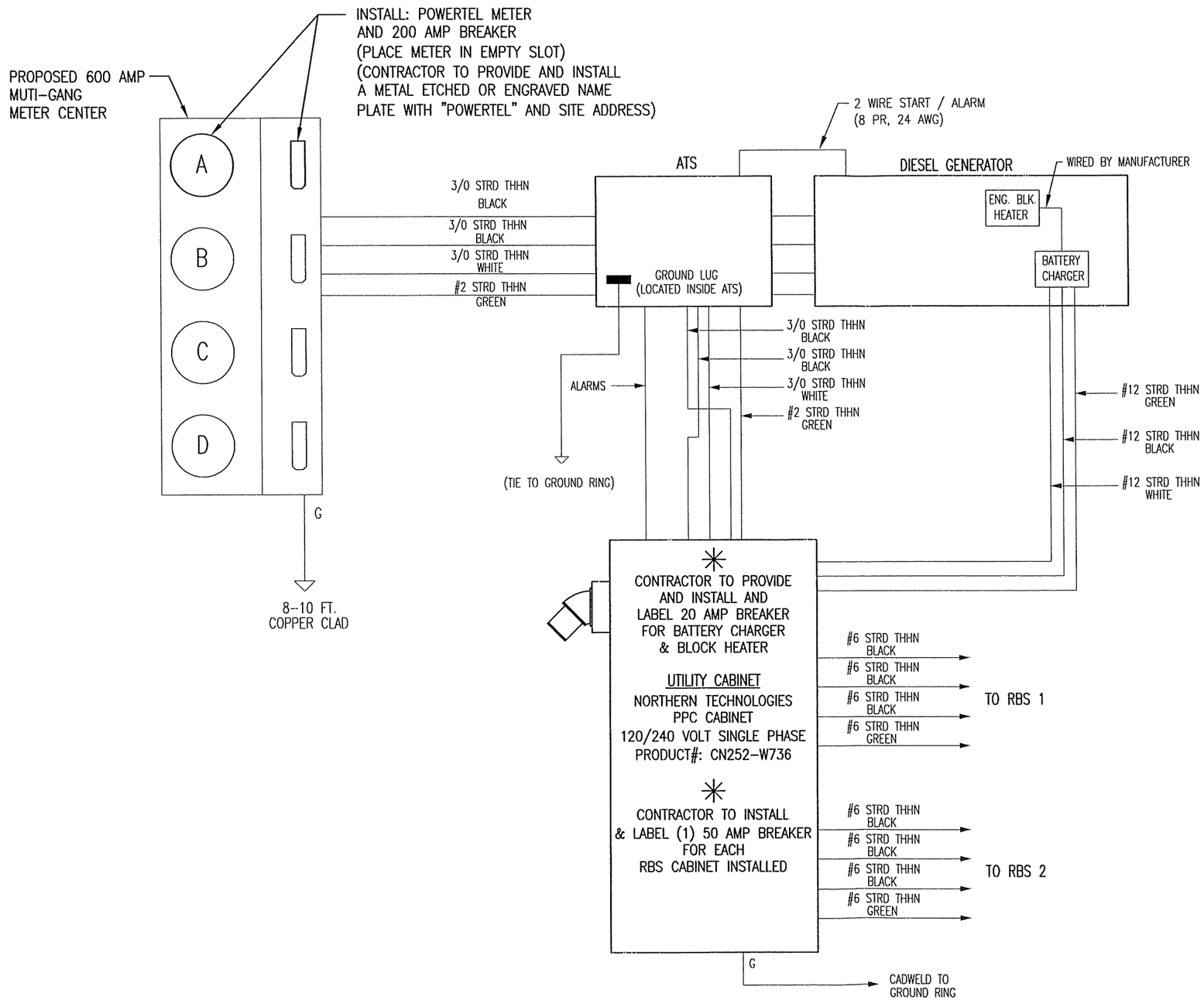

NOTE 1: WHEN INSTALLING TVSS UNIT, USE 3" LONG 1-1/4" CLOSE NIPPLE. USE LOWEST MOST BREAKER POSITIONS FOR 2P-60A BREAKER AND KEEP ALL WIRING TO TVSS AS SHORT AND DIRECT AS POSSIBLE NO SHARP WIRING BENDS.

NOTE 2: ALL FLEXIBLE OR SEALTITE CONDUITS ARE TO BE METALLIC TYPE ONLY.

NOTE 3: ALL ELECTRICAL NEUTRAL AND GROUNDING CONDUCTORS ARE TO BE SAME SIZE AS CURRENT CARRYING CONDUCTORS.

NOTE 4: USE A GROUNDING BUSHING ON ALL CONDUITS THAT ENTER LOAD CENTERS, GENERATOR AND TELCO ENCLOSURE.

STATE OF KENTUCKY
TIMOTHY L. HARDY
20374
REGISTERED PROFESSIONAL ENGINEER

12/2/8

REGISTERED PROFESSIONAL ENGINEER SEAL

ITEM	REVISIONS	BY	CHK. BY	DATE

DRAWN BY: J.E. STEGER DATE: 11-06-08
CHECKED BY: T.L. HARDY DATE: 11-06-08
APPROVED BY: DATE:

HARDY ENGINEERING, INC.
ENGINEERING AND CONSULTING
209 LINDEN STREET, P.O. BOX 708
TRUSSVILLE, AL 35173
PHONE: (205) 655-1427 FAX: (205) 661-9027

DWG. NAME: WIRING DIAGRAM
STANDARD DRAWING
FOR
POWERTEL / MEMPHIS, INC.
LOUISVILLE, KENTUCKY

CAD No: LV0711_C9 SCALE: NOT TO SCALE DWG. No. C9

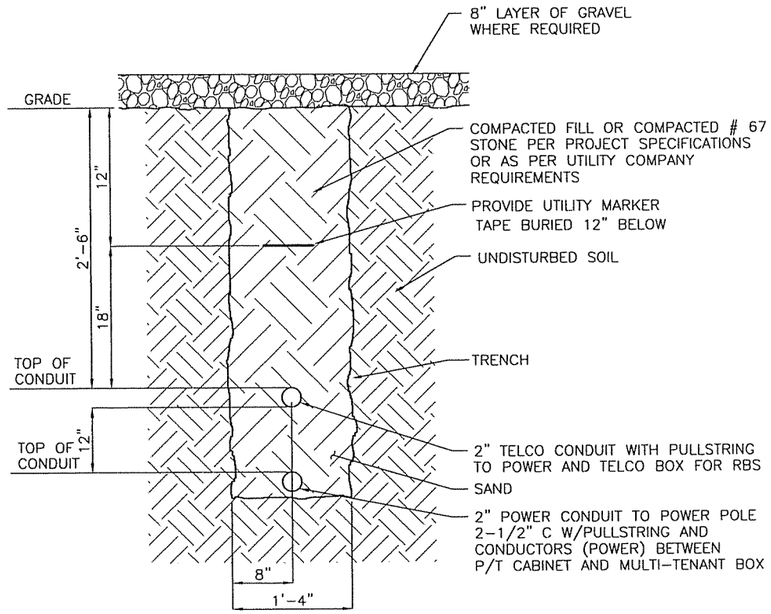

UTILITY TRENCH SECTION

(NOT TO SCALE)

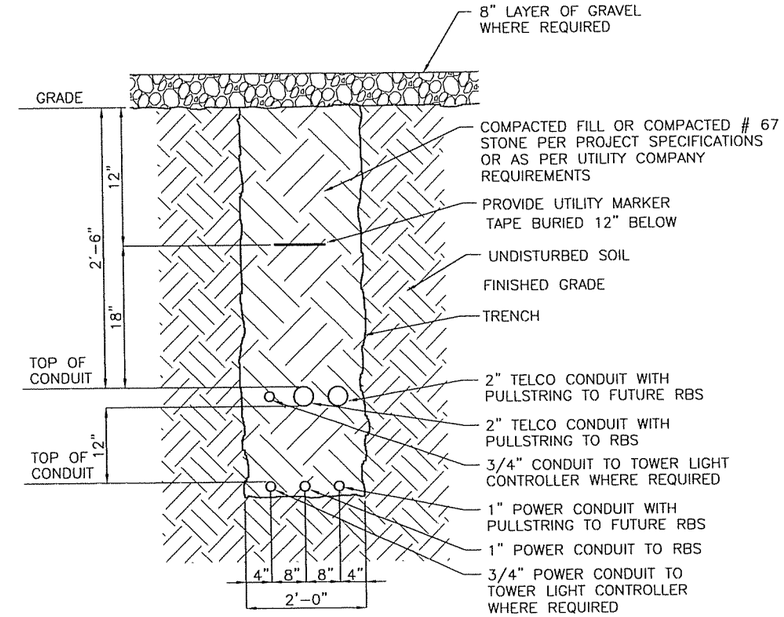

UTILITY TRENCH SECTION

(NOT TO SCALE)

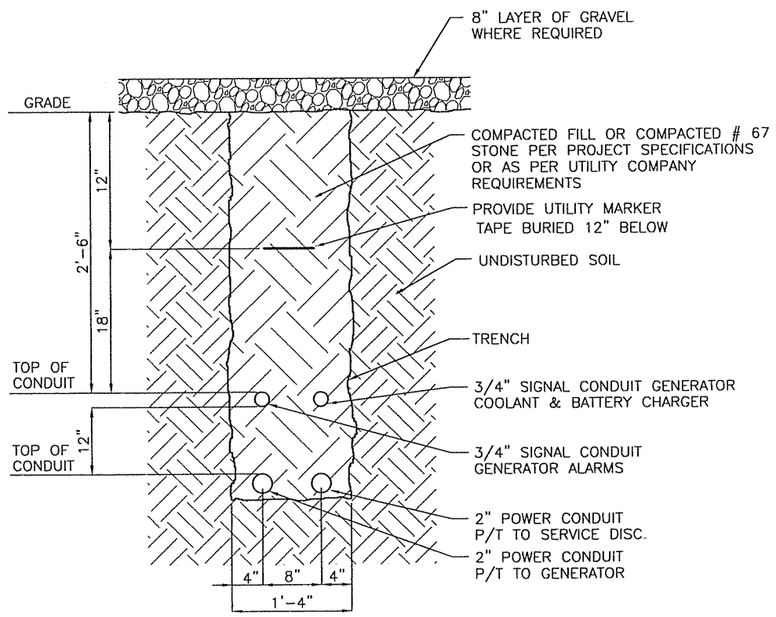

UTILITY TRENCH SECTION

(NOT TO SCALE)

NOTE: ALL BACKFILL IN TRENCH TO BE MECHANICALLY COMPACTED IN LIFTS OF 6 INCHES.

STATE OF KENTUCKY
TIMOTHY L. HARDY
20374
REGISTERED PROFESSIONAL ENGINEER

12/2/8

REGISTERED PROFESSIONAL ENGINEER SEAL

ITEM	REVISIONS	BY	CHK. BY	DATE

DRAWN BY : J.E. STEGER	DATE : 11-06-08	HARDY ENGINEERING, INC.	DWG. NAME: UTILITY TRENCH DETAIL
CHECKED BY : T.L. HARDY	DATE : 11-06-08	ENGINEERING AND CONSULTING 209 LINDEN STREET TRUSSVILLE, AL 35173 PHONE: (205) 655-1427 FAX: (205) 661-9027	STANDARD DRAWING FOR POWERTEL / MEMPHIS, INC. LOUISVILLE, KENTUCKY
APPROVED BY :	DATE :		CAD No. LV0711_C10 · SCALE: NONE · DWG. No. C10

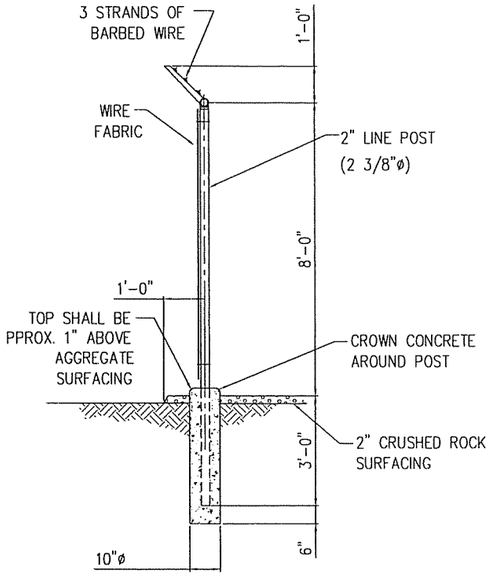

TYPICAL FENCE POST

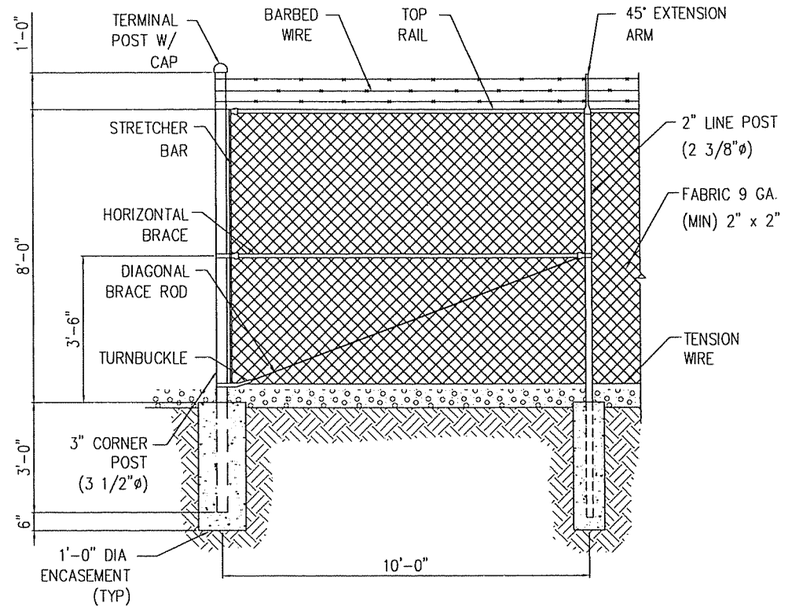

TYPICAL CORNER POST DETAIL

NOT TO SCALE

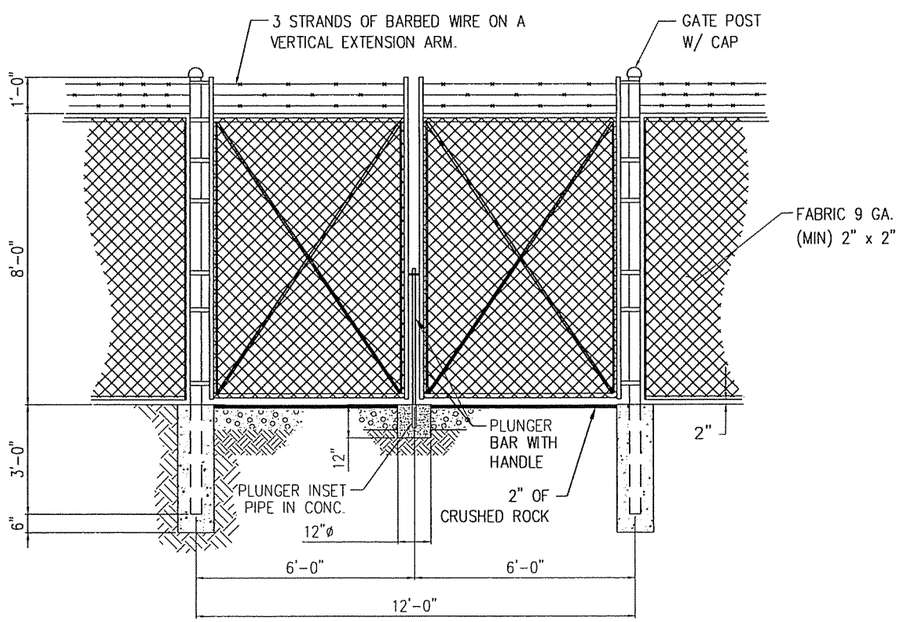

12'-0" DOUBLE SWING GATE DETAIL

FENCE TYPE:

SHALL CONSIST OF GALVANIZED STEEL FRAMEWORK AND GALVANIZED STEEL FABRIC WITH A HEIGHT OF 8 FEET AND AN OVERALL HEIGHT OF 9 FEET FROM THE BOTTOM OF THE FABRIC TO THE TOP BARBED WIRE. THE FENCE SHALL HAVE A TOP RAIL, BOTTOM TENSION WIRE, AND THREE STRANDS OF BARBED WIRE MOUNTED ON VERTICAL EXTENSION ARMS. THE UPPER STRAND SHALL BE APPROXIMATLEY 12 INCHES ABOVE THE TOP OF THE FABRIC. POSTS SALL BE SET IN CONCRETE OR IN SLEEVES AS DETAILED.

MATERIALS:

MATERIALS FOR CHAIN LINK FENCING SHALL BE AS FOLLOWS. ALL STEEL OR MALLEABLE IRON PARTS AND ACCESSORIES FOR FRAMEWORK SHALL BE HOT-DIP GALVANIZED IN ACCORDANCE WITH RESIDENTIAL STANDARDS:

FABRIC: RESIDENTIAL FABRIC 11-1/2 GAUGE, 2 1/4 INCH MESH; GALVANIZED ASTM A392, CLASS 2; TWISTED SELVAGE ON TOP, KNUCKLED SELVAGE ON BOTTOM.

COMMERCIAL POST: LINE POST ARE 2ø INCH, SCH. 40, 2 1/2 O.D. PIPE
TERMINAL POSTS (END, CORNER, AND PULL) ARE 2-1/2ø INCH, SCH. 40, 2-7/8 INCH O.D. PIPE
GATE POST (SWING POSTS) ARE GATE OR LEAF 6ft OR LESS, 2-1/2ø INCH, SCH. 40, 2-7/8 INCH O.D. PIPE
GATE OR LEAF OVER 6ft WIDE AND UP TO 13ft, 3-1/2ø INCH, SCH. 40, 4 INCH O.D. PIPE
TOP RAILS ARE 1-5/8 INCH OD (17 GAUGE) PIPE.

MATERIALS: RAIL COUPLINGS: SLEEVE TPE, 6 INCHES EXPANSION SPRING IN EVERY FIFTH COUPLING.
BRACING: PIPE BRACE SAME AS TOP RAIL , WITH 3/8 INCH DIAMETER STEEL ROD TRUSS AND TIGHTENER
POST TOPS: PRESSED STEEL, MALLEABLE IRON WITH PRESSED STEEL EXTENSION ARM, OR ONE--PIECE ALUMINUM CASTING; WITH HOLE FOR TOP RAIL, DESIGNED TO FIT OVER THE OUTSIDE OF THE POST AND TO PREVENT ENTRY OF MOISTURE INTO TUBULAR POST. BARBED WIRE: GALVANIZED, ASTM A121 CLASS 3; THREE 14 GAUGE MINIMUM STEEL WIRES WITH 4 POINT ROUND 14 GAUGE BARBS SPACED 4 INCHES APART.
STRETCHER BARS: STEEL, 3/16 BY 3/4 INCH, OR EQUIVALENT CROSS-SECTIONAL AREA.
FABRIC TIES: ALUMINUM BANDS AND WIRES.
GATE FRAMES: 1-1/2ø INCH, SCH. 40, 1-7/8 INCH OD PIPE.
TENSION WIRE: GALVANIZED OR ALUMINUM COATED COIL SPRING WIRE, 7 GAUGE.

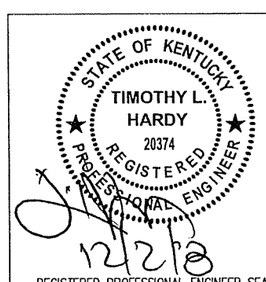

REGISTERED PROFESSIONAL ENGINEER SEAL

ITEM	REVISIONS	BY	CHK. BY	DATE

DRAWN BY: J.E. STEGER — DATE: 11-06-08
CHECKED BY: T.L. HARDY — DATE: 11-06-08
APPROVED BY: — DATE:

HARDY ENGINEERING, INC.
ENGINEERING AND CONSULTING
209 LINDEN STREET, P.O. BOX 708
TRUSSVILLE, AL 35173
PHONE: (205) 655-1427 FAX: (205) 661-9027

DWG. NAME: FENCE DETAILS
STANDARD DRAWING FOR POERTEL / MEMPHIS, INC.
LOUISVILLE, KENTUCKY
CAD No: LV0711_C11 | SCALE: AS SHOWN | DWG No. C11

NSTALLATION:

1. THE FENCE SHOULD BE PLACED ACROSS THE SLOPE ALONG A LINE OF UNIFORM ELEVATION (PERPENDICULAR TO THE DIRECTION OF THE FLOW). THE FENCE SHOULD BE LOCATED AT LEAST 10' FEET FROM THE TOE OF STEEP SLOPES TO PROVIDE SEDIMENT STORAGE AND ACCESS FOR MAINTENANCE AND CLEANOUT.

2. A FLAT-BOTTOM TRENCH APPROXIMATELY 4"-INCHES WIDE AND 8"-INCHES DEEP, OR A V-SHAPED TRENCH 8"-INCHES DEEP SHOULD BE EXCAVATED. ON THE DOWN SLOPE SIDE OF THE TRENCH, DRIVE THE 2"-IN. x 2"-IN. WOOD POSTS AT LEAST 18"-INCHES INTO THE GROUND, SPACING THEM **NO FURTHER THAN 6'-FEET APART.**

3. POSTS SHOULD BE INSTALLED, WITH 1" TO 2"-INCHES OF THE POST PROTRUDING ABOVE THE TOP OF THE FABRIC AND NO MORE THAN 3'-FEET OF THE POST SHOULD PROTRUDE ABOVE THE GROUND. THE MINIMUM FENCE HEIGHT (HEIGHT OF FILTER FABRIC ABOVE GRADE) SHALL BE 18"-INCHES. THE MAXIMUM FENCE HEIGHT (HEIGHT OF FILTER FABRIC ABOVE GRADE) SHALL BE 24 INCHES.

4. THE FILTER FABRIC SHOULD BE PURCHASED IN A CONTINUOUS ROLL AND CUT TO LENGTH OF THE BARRIER TO AVOID THE USE OF JOINTS. WHEN JOINTS ARE NECESSARY, FILTER CLOTH SHOULD BE WRAPPED TOGETHER ONLY AT A SUPPORT POST WITH BOTH ENDS SECURELY FASTENED TO THE POST, WITH A MINIMUM 6"-INCH OVERLAP.

5. EXTRA-STRENGTH FILTER CLOTH (50 POUNDS / LINEAR INCH MINIMUM TENSILE STRENGTH) SHOULD BE USED. A 2"-INCH WIDE LATHE SHALL BE STAPLED OVER THE FILTER FABRIC TO SECURELY FASTEN IT TO THE UPSLOPE SIDE OF THE POSTS. THE STAPLES USED SHOULD BE 1.5"-INCH HEAVY-DUTY WIRE STAPLES SPACED A MAXIMUM OF 8"-INCHES APART.

6. PLACE THE BOTTOM 12"-INCHES OF THE FILTER FABRIC INTO THE 8"-INCH DEEP TRENCH, EXTENDING THE REMAINING 4"-INCHES TOWARDS THE UPSIDE OF THE TRENCH AND BACK FILL THE TRENCH WITH SOIL OR GRAVEL AND COMPACTED.

INSPECTION AND MAINTENANCE:

1. INSPECT SILT FENCE EVERY SEVEN (7) CALENDAR DAYS AND WITHIN 24-HOURS AFTER EACH RAINFALL EVENT THAT PRODUCES 1/2"-INCH OR MORE OF PRECIPITATION. CHECK FOR AREAS WHERE RUNOFF HAS ERODED A CHANNEL BENEATH THE FENCE, OR WHERE THE FENCE WAS CAUSED TO SAG OR COLLAPSE BY RUNOFF OVER TOPPING THE FENCE.

2. IF THE FENCE FABRIC TEARS, BEGINS TO DECOMPOSE, OR IN ANY OTHER WAY BECOMES INEFFECTIVE, REPLACE THE AFFECTED SECTION OF FENCE IMMEDIATELY.

3. SEDIMENT MUST BE REMOVED WHEN IT REACHES APPROXIMATELY 1/3 THE HEIGHT OF THE FENCE, ESPECIALLY IF HEAVY RAINS ARE EXPECTED.

4. SILT FENCE SHOULD BE REMOVED WITHIN 30 DAYS AFTER FINAL SITE STABILIZATION IS ACHIEVED OR AFTER TEMPORARY BMPs ARE NO LONGER NEEDED. TRAPPED SEDIMENT SHOULD BE REMOVED OR STABILIZED ON SITE. DISTURBED AREAS RESULTING FROM FENCE REMOVAL SHALL BE PERMANENTLY STABILIZED.

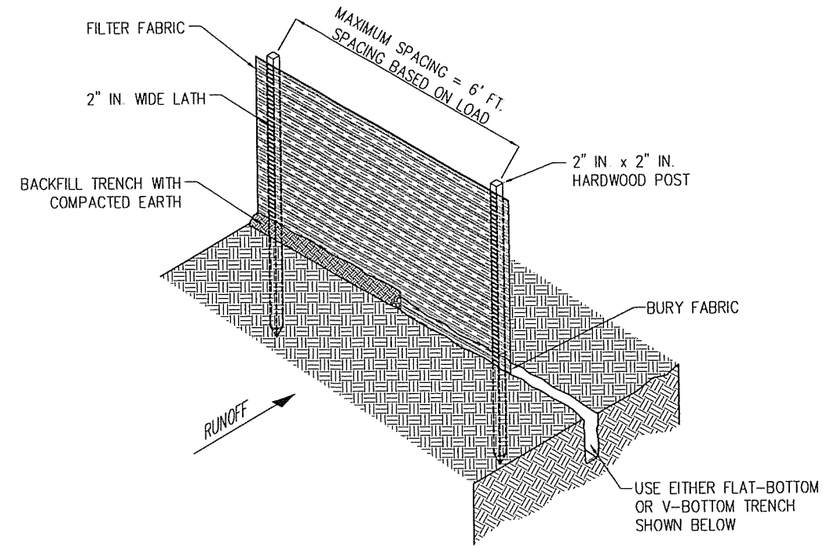

SILT FENCE INSTALLATION

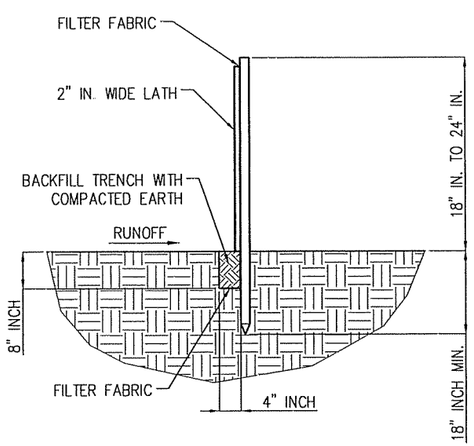

FLAT-BOTTOM TRENCH DETAIL

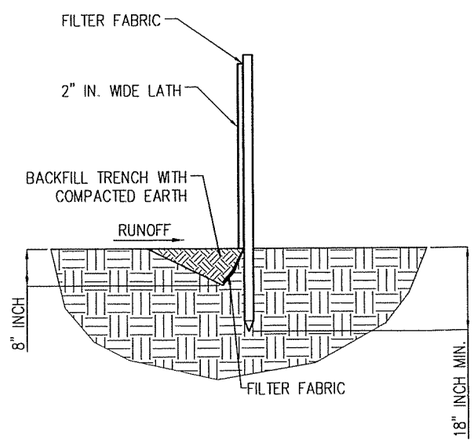

V-SHAPED TRENCH DETAIL

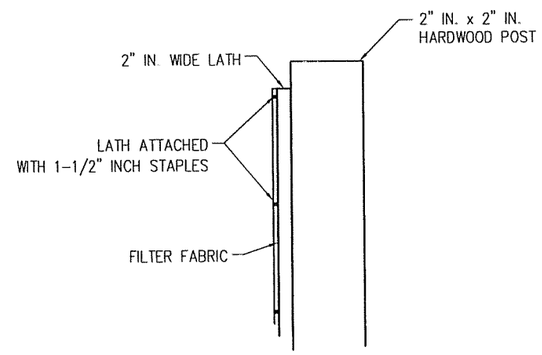

FABRIC ATTACHMENT DETAIL

STATE OF KENTUCKY
TIMOTHY L. HARDY
20374
REGISTERED PROFESSIONAL ENGINEER

12/2/8

REGISTERED PROFESSIONAL ENGINEER SEAL

ITEM	REVISIONS	BY	CHK. BY	DATE

DRAWN BY: J.E. STEGER DATE: 11-06-08
CHECKED BY: T.L. HARDY DATE: 11-06-08
APPROVED BY: DATE:

HARDY ENGINEERING, INC.
ENGINEERING AND CONSULTING
209 LINDEN STREET, P.O. BOX 708
TRUSSVILLE, AL 35173
PHONE: (205) 655-1427 FAX: (205) 661-9027

DWG. NAME: SILT FENCE DETAILS & NOTES

STANDARD DETAILS
FOR
POWERTEL / MEMPHIS, INC.
LOUISVILLE, KENTUCKY

CAD No: LV0711_C12 SCALE: NTS DWG. No. C12

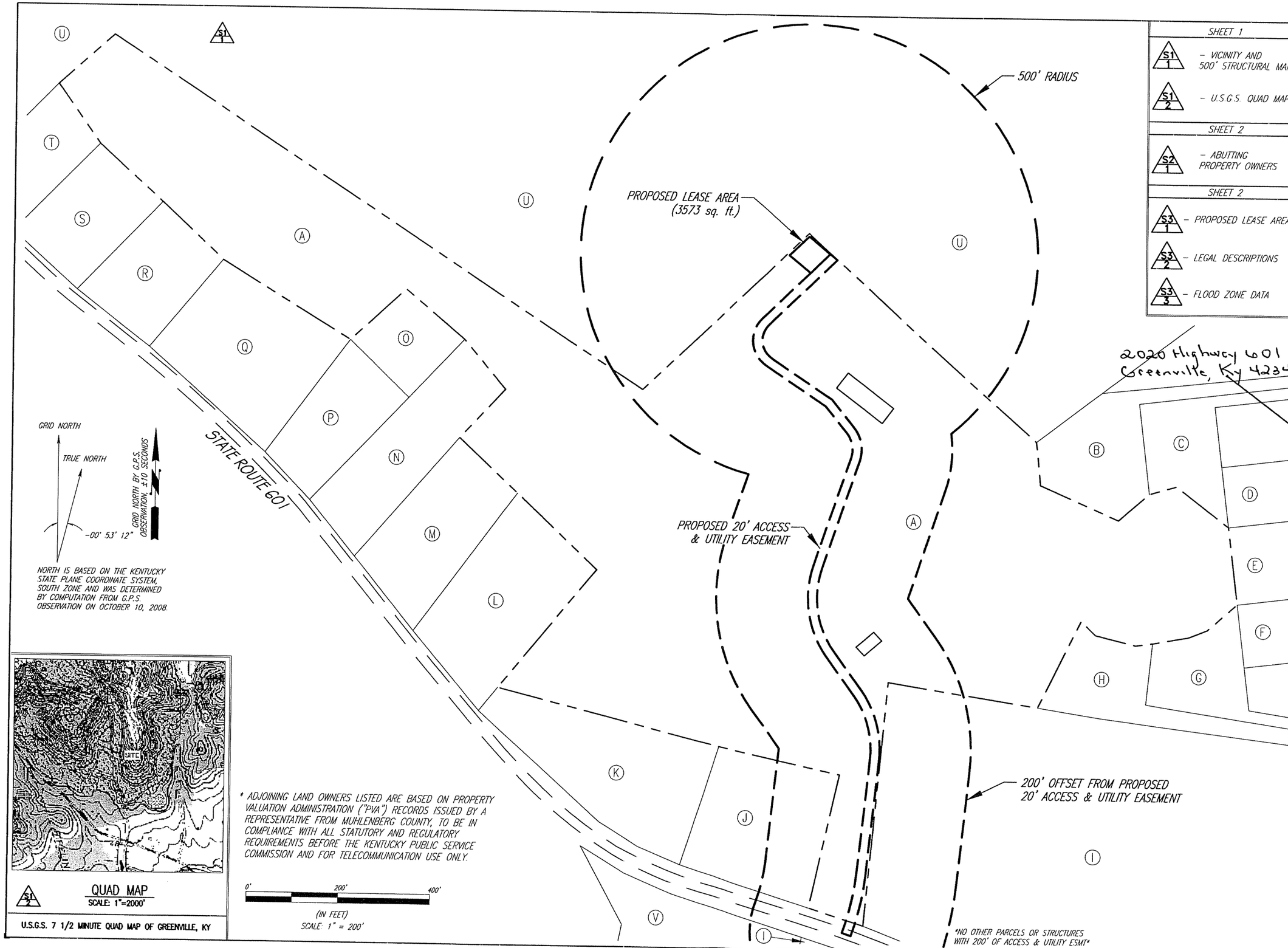

SHEET 1

S1 1 – VICINITY AND 500' STRUCTURAL MAP

S1 2 – U.S.G.S. QUAD MAP

SHEET 2

S2 1 – ABUTTING PROPERTY OWNERS

SHEET 2

S3 1 – PROPOSED LEASE AREA

S3 2 – LEGAL DESCRIPTIONS

S3 3 – FLOOD ZONE DATA

T·Mobile·

F.S. Land Company
T. Alan Neal Company
Land Surveyors and Consulting Engineers
PO Box 17546 2313/2315 Crittenden Drive
Louisville, KY 40217
Phone: (502) 635-5866 (502) 636-5111
Fax: (502) 636-5263

"SITE SURVEY"

SITE NUMBER: 9LV0711A

SITE NAME: JARVIS ~~ROAD~~

SITE ADDRESS: ~~900 MALONE FARM LANE BELTON, KY 42324~~

PROPOSED LEASE AREA: 3,573 sq. ft.

PROPERTY OWNER: WILLIAM C. HILL, 107 NORTH MAIN, GREENVILLE, KY 42345

TAX MAP NUMBER: 090-00-00

PARCEL NUMBER: 013-003

SOURCE OF TITLE: DEED BOOK 469, PAGE 721

DWG BY: DJG

CHKD BY: FSII

DATE: 10.20.08

FSTAN PROJECT NO.: 08-5672

REVISIONS:

C1

SHEET 1

S1/1 – VICINITY AND 500' STRUCTURAL MAP

S1/2 – U.S.G.S. QUAD MAP

SHEET 2

S2/1 – ABUTTING PROPERTY OWNERS

SHEET 2

S3/1 – PROPOSED LEASE AREA

S3/2 – LEGAL DESCRIPTIONS

S3/3 – FLOOD ZONE DATA

S2/1

(A) MAP NO. 90, LOT 13-03
WILLIAM C. HILL
~~107 NORTH MAIN~~ 900 Malone Farm Ln.
~~GREENVILLE, KY 42345~~ Belton, Ky. 42324
DEED BOOK 469, PAGE 721
NO ZONING

(B) MAP NO. 90, LOT 39.9
WILLIAM C. HILL
~~107 NORTH MAIN~~ see address in (A)
~~GREENVILLE, KY 42345~~
DEED BOOK 469, PAGE 721
NO ZONING

(C) MAP NO. 90, LOT 39.8
WILLIAM C. HILL
~~107 NORTH MAIN~~ see address in (A)
~~GREENVILLE, KY 42345~~
DEED BOOK 469, PAGE 721
NO ZONING

(D) MAP NO. 90, LOT 39.6
HARPER, WESLEY K. & CYNTHIA L.
~~871 HUMPHREY RD.~~ 1705 Nebo Cemetery Rd.
~~CENTRAL CITY, KY 42330~~ Greenville Ky 42345
DEED BOOK 495, PAGE 96
NO ZONING

(E) MAP NO. 90, LOT 39.5
HARPER, WESLEY K. & CYNTHIA L.
1705 NEBO CEMETERY RD.
GREENVILLE, KY 42345
DEED BOOK 495, PAGE 96
NO ZONING

(F) MAP NO. 90, LOT 39.4
THOMPSON, MARK E. & M.R.
~~112 TROWBRIDGE ST.~~ 1755 Nebo Cemetery Rd
~~GREENVILLE, KY 42345~~ Greenville, Ky 42345
DEED BOOK 476, PAGE 369
NO ZONING

(G) MAP NO. 90, LOT 39.2
THOMPSON, MARK E. & M.R.
~~112 TROWBRIDGE ST.~~ see address in (F)
GREENVILLE, KY 42345
DEED BOOK 476, PAGE 369
NO ZONING

(H) MAP NO. 90, LOT 39.1
THOMPSON, MARK E. & MELISSA
~~112 TROWBRIDGE ST.~~ see address in (F)
GREENVILLE, KY 42345
DEED BOOK 476, PAGE 369
NO ZONING

(I) MAP NO. 90, LOT 13-03
WILLIAM C. HILL
~~107 NORTH MAIN~~ see address in (A)
~~GREENVILLE, KY 42345~~
DEED BOOK 469, PAGE 721
NO ZONING

(J) MAP NO. 73, LOT 76.01
SLAUGHTER, JACE
U.S. HWY 62 W 1950
GREENVILLE, KY 42345
DEED BOOK 495, PAGE 277
NO ZONING

(K) MAP NO. 73, LOT 76
STEELE, CARL JR. & GRESHIN M.
236 N. CHERRY ST.
GREENVILLE, KY 42345
DEED BOOK 499, PAGE 484
NO ZONING

(L) MAP NO. 73, LOT 75
BROOKS, GERALD R. JR. & RHONDA
2183 ST. RT. 601
GREENVILLE, KY 42345
DEED BOOK 510, PAGE 298
NO ZONING

(M) MAP NO. 73, LOT 74
SHADOWEN, WAYNE & DIANNA
810 LOCKETOWN RD.
GRAHAM, KY 42344
DEED BOOK 509, PAGE 444
NO ZONING

(N) MAP NO. 73, LOT 73.02
LEWIS, MARTY D. & RHONDA S.
~~RT. 4 BOX 151~~ 2253 State Rd 601
GREENVILLE, KY 42345
DEED BOOK 406, PAGE 119
NO ZONING

(O) MAP NO. 73, LOT 73.01
STEWART, EDWARD & ELLEN
RT. 1 BOX 5A
GREENVILLE, KY 42345
DEED BOOK 369, PAGE 371
NO ZONING

(P) MAP NO. 73, LOT 73
PIPER, DAVID R. & PEGGY K.
~~RT. 4 BOX 5A~~ 2281 State Rd 601
~~444 NORTH COLLEGE ST.~~
GREENVILLE, KY 42345
DEED BOOK XXX, PAGE XXX
NO ZONING

(Q) MAP NO. 73, LOT 72
LEWIS, ~~REALOUS~~ Mary
~~RT. 4 BOX 9~~ 2315 State Rt. 601
GREENVILLE, KY 42345
NO DEED OF RECORD FOUND
NO ZONING

(R) MAP NO. 73, LOT 71
FAITH, ~~BILLY~~ Billie
~~LUZERNE DR., HWY 601~~ 2365 State Rt. 601
GREENVILLE, KY 42345
DEED BOOK 312, PAGE 166
NO ZONING

(S) MAP NO. 73, LOT 70
~~GROVER~~, VICKIE L. Groves
~~RT. 4 BOX 96~~ 2405 State Rt. 601
GREENVILLE, KY 42345
DEED BOOK 404, PAGE 263
NO ZONING

(T) MAP NO. 73, LOT ~~XXX~~ 69
JONES, TERRY L. & SHELLA
2421 ST. RT. 601
GREENVILLE, KY 42345
DEED BOOK 350, PAGE 177
NO ZONING

(U) MAP NO. 73, LOT 60
COMMONWEALTH OF KENTUCKY
NO ADDRESS LISTED AT PVA
CITY,STATE ZIP
DEED BOOK 370, PAGE 277
NO ZONING

(V) MAP NO. 73, LOT 38
STEELE, CARL
236 NORTH CHERRY ST.
GREENVILLE, KY 42345
DEED BOOK 494, PAGE 465
NO ZONING

2020 Highway 601
Greenville, Ky 42345

T·Mobile

F.S. Land Company
T. Alan Neal Company
Land Surveyors and Consulting Engineers
PO Box 17546 2313/2315 Crittenden Drive
Louisville, KY 40217
Phone: (502) 635-5866 (502) 636-5111
Fax: (502) 636-5263

"SITE SURVEY"

SITE NUMBER: 9LV0711A

SITE NAME: JARVIS ~~ROAD~~

SITE ADDRESS: ~~900 MALONE FARM LANE BELTON, KY 42324~~

PROPOSED LEASE AREA: 3,573 sq. ft.

PROPERTY OWNER: WILLIAM C. HILL, 107 NORTH MAIN, GREENVILLE, KY 42345

TAX MAP NUMBER: 090-00-00

PARCEL NUMBER: 013-003

SOURCE OF TITLE: DEED BOOK 469, PAGE 721

DWG BY: DJG

CHKD BY: FSII

DATE: 10.20.08

FSTAN PROJECT NO.: 08-5672

REVISIONS:

C1.1

Customer Name: T-MOBILE (TENNESSEE)
Site: 9LV0711 JARVIS ROAD- MUHLENBURG COUNTY- KY

FWT
P.O. BOX 8597 FORT WORTH, TX 76124-0597
PHONE: (800) 433-1816 FAX: (817) 255-8656

JOB DATA			
Page 1 of 1		Job No.	J081119001-A
By	HD/tw	Design No.	S08-0471-A
Chk'd By	TW	Date	Nov 20 2008
		Rev. No. 0	Rev. Date
Structure	250-FT SST		
Ref. No.	...-0400\0471\J081119001-A\J081119001-A.out		
Design Standard	ANSI/TIA-222-G-2005 Addendum 1		

GENERAL DESIGN CONDITIONS	
Design Wind Speed: 90.00(mph)	Structure Class: II
Iced Wind Speed: 30.00(mph)	Exposure Category: C
Service Wind Speed: 60.00(mph)	Topographic Category: 1
Ice Thickness: 0.75(in)	–

ANTENNA LIST					
No.	Elev.(FT)	Antenna	Mount Type	AZ (°)	COAX
1	250	(1) Lightning Rod		0	
2	250	(4) TMBX-6517-R2M	AM110-P-12'	0	18)LDF7P-50A
3	250	(4) TMBX-6517-R2M	AM110-P-12'	120	
4	250	(4) TMBX-6517-R2M	AM110-P-12'	240	
5	235	(4) TMBX-6517-R2M	AM110-P-12'	0	12)LDF7P-50A
6	235	(4) TMBX-6517-R2M	AM110-P-12'	120	
7	235	(4) TMBX-6517-R2M	AM110-P-12'	240	
8	220	(4) TMBX-6517-R2M	AM110-P-12'	0	12)LDF7P-50A
9	220	(4) TMBX-6517-R2M	AM110-P-12'	120	
10	220	(4) TMBX-6517-R2M	AM110-P-12'	240	

LINEAR APPURTENANCES
STEP BOLTS ON ONE LEG
(1)-Waveguide Ladder: 0'-250' On Tower Face (AZ): 60 deg
(1)-Waveguide Ladder: 0'-235' On Tower Face (AZ): 180 deg
(1)-Waveguide Ladder: 0'-220' On Tower Face (AZ): 300 deg

COAXIAL LINES DISTRIBUTION				
HEIGHT	FACE 1	FACE 2	FACE 3	TOTAL
250'	18D	–	–	18
235'	–	12D	–	12
220'	–	–	12D	12

(D = DOUBLE STACKED)

ASTM																							
50 KSI	A36																		A325				A36
2	Y	B	N/R	N/R	N/R	2-1/2	1-5/8	4-5/8															
2	Y	N/R	N/R	N/R	N/R	2-1/2	N/R	4-5/8															
2 1/4	Y	N/R	N/R	N/R	N/R	2-1/2	N/R	6-5/8															
2 1/2	C	B	N/R	N/R	N/R	2-5/8	1-5/8	6-3/4															
2 3/4	C	B	N/R	N/R	N/R	2-5/8	1-5/8	6-3/4															
3	D	C	N/R	N/R	N/R	2-5/8	1-5/8	6-7/8															
3 1/4	D	C	N/R	N/R	N/R	2-5/8	1-5/8	6-1															
3 1/4	E	D	N/R	N/R	N/R	2-5/8	1-5/8	6-1															
3 1/2	F	D	N/R	N/R	N/R	2-5/8	1-5/8	6-1															
3 1/2	CC	E	D	C	B	2-5/8	1-5/8	6-1															
3 3/4	DD	F	D	C	C	2-5/8	1-5/8	6-1 1/8															
3 3/4	DD	F	F	C	C	2-5/8	1-5/8	6-1 1/8															
4	DD	G	F	D	C	2-5/8	1-5/8	N/R	(6) - 1 3/4ø x 5'-6" TOTAL ANCHOR ROD LENGTH														
LEGS (ø) 50 KSI	DIAGONALS 36 KSI	GIRTS	INT BRACING	SUB DIAG.	SUB GIRTS	DIAG BOLTS (ø)	RDNT BOLTS (ø)	SPLICE BOLTS (ø)	ANCHOR RODS (ø)														

Note: DOUBLE LETTER SIGNIFY BACK TO BACK ANGLES

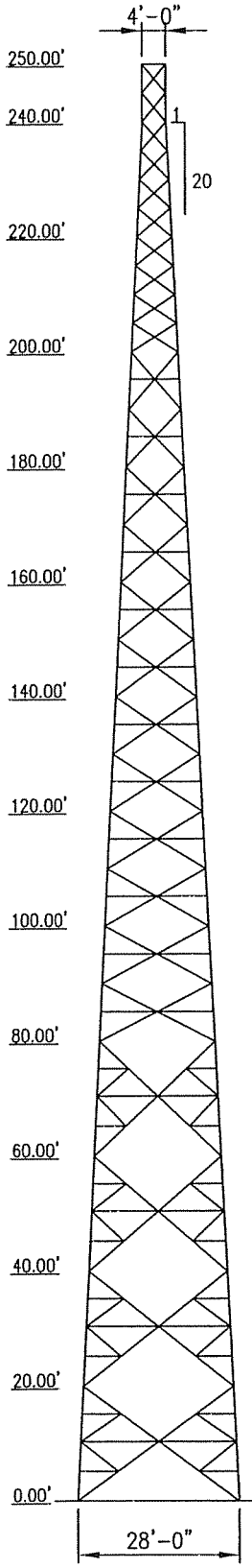

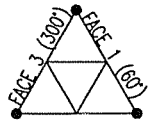

INTERIOR BRACING
(1) 5/8"ø BOLT EA. END
(EL. 10' to 70')

MEMBER TABLE LEGEND	
D	L3X3X3/16
G	L4X4X1/4
F	L3 1/2X3 1/2X1/4
C	L2 1/2X2 1/2X3/16
E	L3X3X1/4
B	L2X2X3/16
Y	L1 3/4X1 3/4X3/16

STATE OF KENTUCKY
TA-WEN LEE
24589
LICENSED PROFESSIONAL ENGINEER
11-20-08

FACTORED BASE REACTIONS

UPLIFT/LEG:	333.7 KIPS.	O.T. MOMENT:	9117.1 FT-KIPS.
COMP./LEG:	400.2 KIPS.	MAX. DOWNLOAD:	54.5 KIPS.
HORIZ./LEG:	40.3 KIPS.	TOTAL SHEAR:	68.1 KIPS.
EST.WEIGHT:	37.5 KIPS. (No SPL or Gussets)		

FIELD NOTES:

1.) VERIFY TOWER ORIENTATION WITH CUSTOMER.
2.) TOP OF FINISHED CONCRETE MUST BE AT THE SAME ELEVATION UNDER ALL TOWER LEGS.
3.) SEE FOUNDATION DESIGN FOR SPECIFIC INSTALLATION INFORMATION AND DESIGN CRITERIA.
4.) ANCHOR BOLTS TO BE SET WITH FURNISHED ANCHOR BOLT TEMPLATES.
5.) ANCHOR BOLT ORIENTATION – SEE BELOW
6.) ANCHOR BOLT THREADS ABOVE CONCRETE SHOULD BE PROTECTED DURING FOUNDATION INSTALLATION.
7.) REMOVE TOP TEMPLATE PRIOR TO SETTING TOWER BASE SECTION.

BILL OF MATERIAL

ITEM	MARK NO.	QTY.	DESCRIPTION	WEIGHT/lbs
1	------	3	TEMPLATE @ TOP	
2	------	3	ANCHOR PLATE @ BOTTOM	
3	------	18	1 3/4"ø A36 ANCHOR ROD x 5'-6"	
4				
5				
6				
7				
8				
9				
10				
			TOTAL GALVANIZED WEIGHT/lbs	

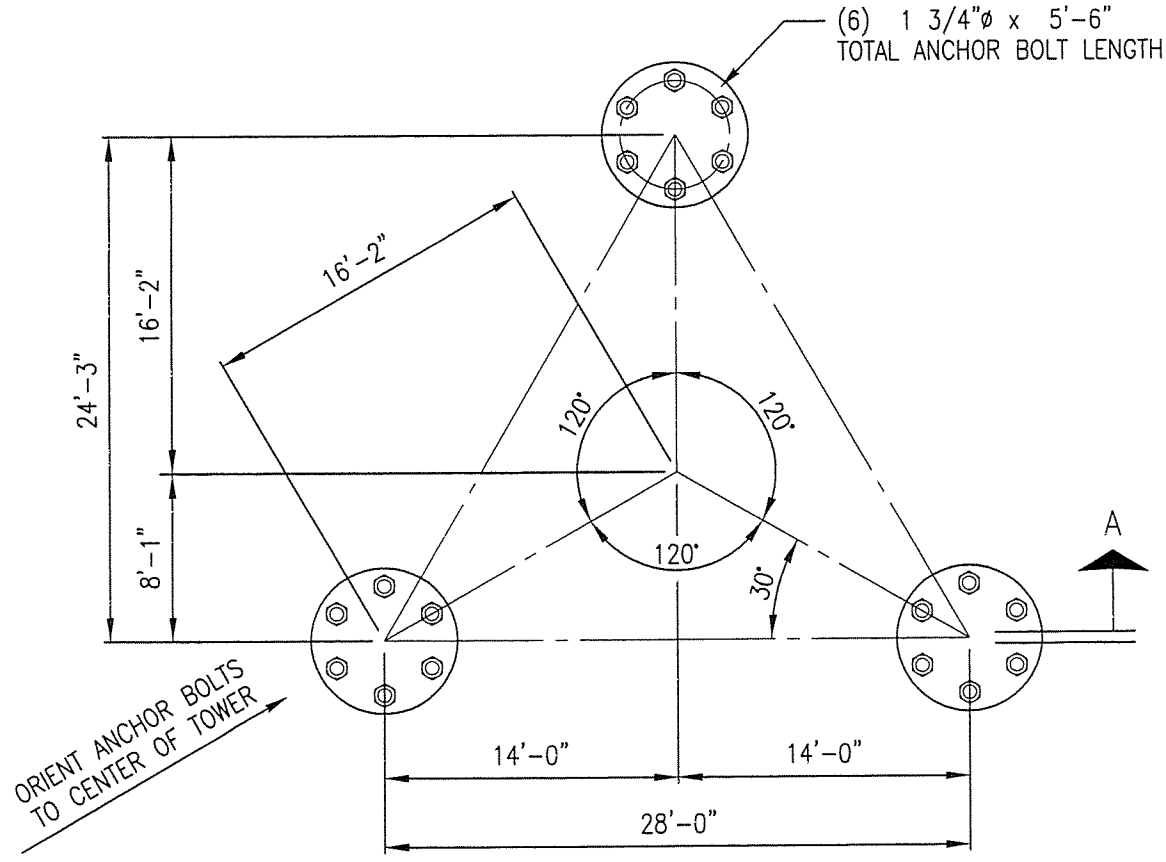

PLAN VIEW

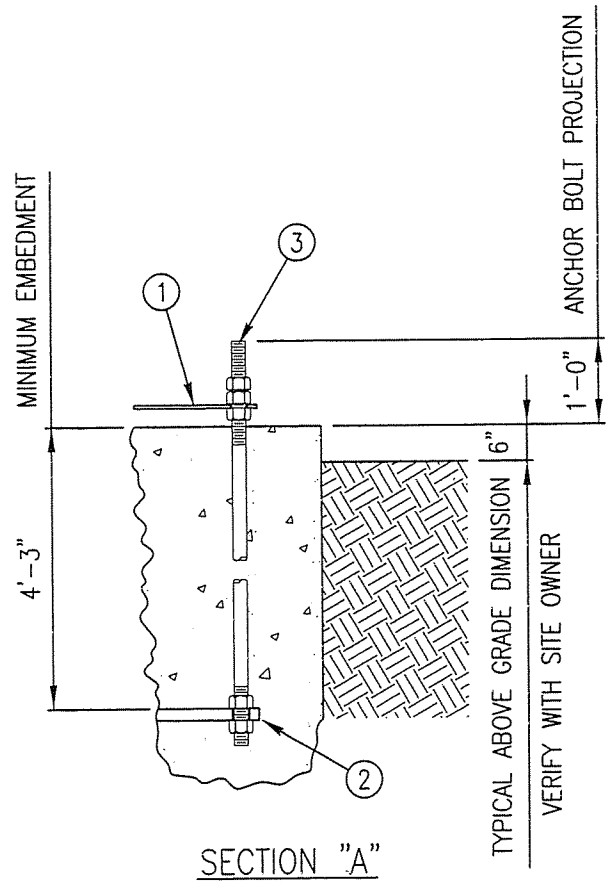

SECTION "A"

REV.	DATE	BY	INIT.	DESCRIPTION

! PROPRIETARY AND CONFIDENTIAL !
THIS DOCUMENT AND THE INFORMATION CONTAINED HEREIN ARE THE SOLE PROPERTY OF FWT, INC. DUPLICATION OR DISSEMINATION OF THIS INFORMATION WITHOUT PRIOR WRITTEN CONSENT OF FWT, INC. IS PROHIBITED.

FWT, Inc.
5750 East I-20
Fort Worth, Texas 76119 U.S.A.
(817) 255-3060 FAX (817) 255-8656

DRAWN BY: TLEE
CHECKED BY: –
CAD FILE: O:\JOB\08\11\19\001\ENGINEERING\J081119001-A-AB.DWG|TL|20NOV08|12:02PM
REV. –
SPECIFIC INFORMATION: 9LV0711 JARVIS ROAD– MUHLENBURG COUNTY– KY
SCALE: NONE
DATE: 20–Nov–08
SHEET NO. SHEET 1 OF 1
DRAWING TITLE: ANCHOR ROD INSTALLATION
JOB NO. J081119001–A
DRAWING NO. AB0000

Section A: PROJECT DATA

Project Title:	250-FT:SST:13-SECTIONS
Customer Name:	T-Mobile (Tennessee)
Site:	9LV0711 Jarvis Road- Muhlenburg County- KY
Contract No.:	S08-0471-A:J081119001-A
Revision:	0
Engineer:	HD/tw
Date:	Nov 20 2008
Time:	11:09:18 AM

Design Standard: ANSI/TIA-222-G-2005 Addendum 1

GENERAL DESIGN CONDITIONS

Start wind direction:	0.00 (Deg)
End wind direction:	330.00 (Deg)
Increment wind direction:	30.00 (Deg)
Elevation above ground:	0.00(ft)
Gust Response Factor Gh:	0.85
Structure class:	II
Exposure category:	C
Topographic category:	1
Material Density:	490.1(lbs/ft^3)
Young's Modulus:	29000.0(ksi)
Poisson Ratio:	0.30
Weight Multiplier:	1.03

Minimum Bracing Resistance as per 4.4.1

WIND ONLY CONDITIONS:

Basic Wind Speed (No Ice):	90.00(mph)
Directionality Factor Kd:	0.85
Importance Factor I:	1.00
Wind Load Factor:	1.60
Dead Load Factor:	1.20
Dead Load Factor for Uplift:	0.90

WIND AND ICE CONDITIONS:

Basic Wind Speed (With Ice):	30.00(mph)
Directionality Factor Kd:	0.85
Importance Factor I:	1.00
Ice Thickness:	0.75(in)
Ice Density:	56.19(lbs/ft^3)
Wind Load Factor:	1.00
Dead Load Factor:	1.20
Ice Load Factor:	1.00

WIND ONLY SERVICEABILITY CONDITIONS:

Serviceability Wind Speed:	60.00(mph)
Directionality Factor Kd:	0.85
Importance Factor I:	1.00
Wind Load Factor:	1.00
Dead Load Factor:	1.00

PATTERN LOADING (IF APPLICABLE) CONDITIONS:

Basic Wind Speed (No Ice):	90.00(mph)
Directionality Factor Kd:	0.85

Section B: STRUCTURE GEOMETRY

TOWER GEOMETRY

Cross-Section	Height (ft)	Tot Height (ft)	# of Section	Bot Width (in)	Top Width (in)
Triangular	250.00	250.00	13	336.00	48.00

SECTION GEOMETRY

Sec #	Sec. Name	Elevation Bottom (ft)	Elevation Top (ft)	Widths Bottom (in)	Widths Top (in)	Legs (lbs)	Masses Brcg. (lbs)	Masses Sec.Brc (lbs)	Masses Int.Brc (lbs)	Masses Sect. (lbs)	Masses Database (lbs)	Brcg. Clear. (in)
13	2X20A000040410	240.00	250.00	48	48	438	197	0	0	634	489	0.787
12	4X20A000040620	220.00	240.00	72	48	847	369	0	0	1217	1101	0.787
11	4X22A000060820	200.00	220.00	96	72	1027	449	0	0	1476	3029	0.787
10	GX25C000081020	180.00	200.00	120	96	1167	510	135	0	1812	3274	0.787
9	GX27C000101220	160.00	180.00	144	120	1403	563	165	0	2130	2114	0.787
8	GX30D000121420	140.00	160.00	168	144	1659	752	246	0	2657	2657	0.787
7	GX32D000141620	120.00	140.00	192	168	1936	827	284	0	3047	3053	0.787
6	GX32E000161820	100.00	120.00	216	192	1954	1194	390	0	3538	4762	0.787
5	GX35F000182020	80.00	100.00	240	216	2252	1527	436	0	4214	5331	0.787
4	BX35CCD0202220	60.00	80.00	264	240	2247	1099	750	120	4215	5816	0.787
3	BX37DDD0222420	40.00	60.00	288	264	2675	1398	916	132	5120	5328	0.787
2	BX37DDF0242620	20.00	40.00	312	288	2541	1468	985	222	5215	8186	0.787
1	BX40DDF0262820	0.00	20.00	336	312	2970	1541	1192	240	5943	7030	0.787
Total Mass:						23116	11893	5497	713	41220	52169	

PANEL GEOMETRY

Sec#	Pnl#	Type	SecBrcg	Mid. Horiz Continuous	Horiz	Height (ft)	Bottom Width (in)	Top Width (in)	Plan Bracing	Hip Bracing	Gusset Plate Area (ft^2)	Gusset Plate Weight (lbs)
13	2	X	(None)		Yes	5.0	48.0	48.0	(None)	(None)	0.850	17.35
13	1	X	(None)		None	5.0	48.0	48.0	(None)	(None)	0.850	17.35
12	4	X	(None)		None	5.0	54.0	48.0	(None)	(None)	0.737	15.02
12	3	X	(None)		None	5.0	60.0	54.0	(None)	(None)	0.737	15.02
12	2	X	(None)		None	5.0	66.0	60.0	(None)	(None)	0.737	15.02
12	1	X	(None)		None	5.0	72.0	66.0	(None)	(None)	0.737	15.02
11	4	X	(None)		None	5.0	78.0	72.0	(None)	(None)	0.753	15.34
11	3	X	(None)		None	5.0	84.0	78.0	(None)	(None)	0.753	15.34
11	2	X	(None)		None	5.0	90.0	84.0	(None)	(None)	0.753	15.34
11	1	X	(None)		None	5.0	96.0	90.0	(None)	(None)	0.753	15.34
10	2	X	2-Subdiv.	No	None	10.0	108.0	96.0	(None)	(None)	1.055	21.54
10	1	X	2-Subdiv.	No	None	10.0	120.0	108.0	(None)	(None)	1.055	21.54
9	2	X	2-Subdiv.	No	None	10.0	132.0	120.0	(None)	(None)	1.200	24.50
9	1	X	2-Subdiv.	No	None	10.0	144.0	132.0	(None)	(None)	1.200	24.50
8	2	X	2-Subdiv.	No	None	10.0	156.0	144.0	(None)	(None)	1.345	27.46
8	1	X	2-Subdiv.	No	None	10.0	168.0	156.0	(None)	(None)	1.345	27.46
7	2	X	2-Subdiv.	No	None	10.0	180.0	168.0	(None)	(None)	1.491	30.42
7	1	X	2-Subdiv.	No	None	10.0	192.0	180.0	(None)	(None)	1.491	30.42
6	2	X	2-Subdiv.	No	None	10.0	204.0	192.0	(None)	(None)	1.636	33.38
6	1	X	2-Subdiv.	No	None	10.0	216.0	204.0	(None)	(None)	1.636	33.38
5	2	X	2-Subdiv.	No	None	10.0	228.0	216.0	(None)	(None)	1.200	36.34
5	1	X	2-Subdiv.	No	None	10.0	240.0	228.0	(None)	(None)	1.200	36.34
4	1	X	4-Subdiv.	Yes	None	20.0	264.0	240.0	2-Subdiv.	(None)	3.488	71.15
3	1	X	4-Subdiv.	Yes	None	20.0	288.0	264.0	2-Subdiv.	(None)	3.681	112.70

7/1	Leg	SR 3 1/4	A572 gr.50	Tension	6-1.000	A325X					
7/1	Diag	L3x3x3/16	A36	Bolted	2-0.625	A325X	1.250	1.500	0.250	3.000	
7/1	SecH1	L2 1/2x2 1/2x3/16	A36	Bolted	1-0.625	A325X	1.250	1.250	0.250	1.875	
6/2	Leg	SR 3 1/4	A572 gr.50	Tension	6-1.000	A325X					
6/2	Diag	L3x3x1/4	A36	Bolted	2-0.625	A325X	1.250	1.500	0.250	3.000	
6/2	SecH1	L3x3x3/16	A36	Bolted	1-0.625	A325X	1.250	1.500	0.250	1.875	
6/1	Leg	SR 3 1/4	A572 gr.50	Tension	6-1.000	A325X					
6/1	Diag	L3x3x1/4	A36	Bolted	2-0.625	A325X	1.250	1.500	0.250	3.000	
6/1	SecH1	L3x3x3/16	A36	Bolted	1-0.625	A325X	1.250	1.500	0.250	1.875	
5/2	Leg	SR 3 1/2	A572 gr.50	Tension	6-1.000	A325X					
5/2	Diag	L3 1/2x3 1/2x1/4	A36	Bolted	2-0.625	A325X	1.250	1.750	0.250	3.000	
5/2	SecH1	L3x3x3/16	A36	Bolted	1-0.625	A325X	1.250	1.500	0.250	1.875	
5/1	Leg	SR 3 1/2	A572 gr.50	Tension	6-1.000	A325X					
5/1	Diag	L3 1/2x3 1/2x1/4	A36	Bolted	2-0.625	A325X	1.250	1.750	0.250	3.000	
5/1	SecH1	L3x3x3/16	A36	Bolted	1-0.625	A325X	1.250	1.500	0.250	1.875	
4/1	Leg	SR 3 1/2	A572 gr.50	Tension	6-1.000	A325X					
4/1	Diag	2L2 1/2x2 1/2x3/16	A36	Bolted	2-0.625	A325X	1.250	1.250	0.250	3.000	0.250 4.00
4/1	SecD1	L2 1/2x2 1/2x3/16	A36	Bolted	1-0.625	A325X	1.250	1.250	0.250	1.875	
4/1	SecD2	L2 1/2x2 1/2x3/16	A36	Bolted	1-0.625	A325X	1.250	1.250	0.250	1.875	
4/1	SecH1	L3x3x1/4	A36	Bolted	1-0.625	A325X	1.250	1.500	0.250	1.875	
4/1	SecH2	L2x2x3/16	A36	Bolted	1-0.625	A325X	1.250	0.875	0.250	1.875	
4/1	SecH3	L2x2x3/16	A36	Bolted	1-0.625	A325X	1.250	0.875	0.250	1.875	
4/1	PlanH1	L3x3x3/16	A36	Bolted	1-0.625	A325X	1.125	1.500	0.375	1.875	
3/1	Leg	SR 3 3/4	A572 gr.50	Tension	6-1.125	A325X					
3/1	Diag	2L3x3x3/16	A36	Bolted	2-0.625	A325X	1.250	1.500	0.375	3.000	0.375 4.00
3/1	SecD1	L2 1/2x2 1/2x3/16	A36	Bolted	1-0.625	A325X	1.250	1.250	0.375	1.875	
3/1	SecD2	L2 1/2x2 1/2x3/16	A36	Bolted	1-0.625	A325X	1.250	1.250	0.375	1.875	
3/1	SecH1	L3 1/2x3 1/2x1/4	A36	Bolted	1-0.625	A325X	1.250	1.750	0.375	1.875	
3/1	SecH2	L2 1/2x2 1/2x3/16	A36	Bolted	1-0.625	A325X	1.250	1.250	0.375	1.875	
3/1	SecH3	L2 1/2x2 1/2x3/16	A36	Bolted	1-0.625	A325X	1.250	1.250	0.375	1.875	
3/1	PlanH1	L3x3x3/16	A36	Bolted	1-0.625	A325X	1.125	1.500	0.375	1.875	
2/1	Leg	SR 3 3/4	A572 gr.50	Tension	6-1.125	A325X					
2/1	Diag	2L3x3x3/16	A36	Bolted	2-0.625	A325X	1.250	1.500	0.375	3.000	0.375 4.00
2/1	SecD1	L2 1/2x2 1/2x3/16	A36	Bolted	1-0.625	A325X	1.250	1.250	0.375	1.875	
2/1	SecD2	L2 1/2x2 1/2x3/16	A36	Bolted	1-0.625	A325X	1.250	1.250	0.375	1.875	
2/1	SecH1	L3 1/2x3 1/2x1/4	A36	Bolted	1-0.625	A325X	1.250	1.750	0.375	1.875	
2/1	SecH2	L2 1/2x2 1/2x3/16	A36	Bolted	1-0.625	A325X	1.250	1.250	0.375	1.875	
2/1	SecH3	L2 1/2x2 1/2x3/16	A36	Bolted	1-0.625	A325X	1.250	1.250	0.375	1.875	
2/1	PlanH1	L3 1/2x3 1/2x1/4	A36	Bolted	1-0.625	A325X	1.125	1.750	0.375	1.875	
1/1	Leg	SR 4	A572 gr.50	Tension	6-1.250	A325X					
1/1	Diag	2L3x3x3/16	A36	Bolted	2-0.625	A325X	1.250	1.500	0.375	3.000	0.375 4.00
1/1	SecD1	L3x3x3/16	A36	Bolted	1-0.625	A325X	1.250	1.500	0.375	1.875	
1/1	SecD2	L3x3x3/16	A36	Bolted	1-0.625	A325X	1.250	1.500	0.375	1.875	
1/1	SecH1	L4x4x1/4	A36	Bolted	1-0.625	A325X	1.250	2.000	0.375	1.875	
1/1	SecH2	L2 1/2x2 1/2x3/16	A36	Bolted	1-0.625	A325X	1.250	1.250	0.375	1.875	
1/1	SecH3	L2 1/2x2 1/2x3/16	A36	Bolted	1-0.625	A325X	1.250	1.250	0.375	1.875	
1/1	PlanH1	L3 1/2x3 1/2x1/4	A36	Bolted	1-0.625	A325X	1.125	1.750	0.375	1.875	

Section D: TRANSMISSION LINE DATA

Transmission Lines Position

No.	Bot El (ft)	Top El (ft)	Desc.	Radius (ft)	Az.	Orient.	No.	No. of Rows	Part of Face	Vert.	Antenna	User Ka
1	0.00	250.00	LDF7P-50A	13.37	60.00	7.20	18	2		No	TMBX-6517-R2M	
2	0.00	235.00	LDF7P-50A	13.37	180.00	127.20	12	2		No	TMBX-6517-R2M	
3	0.00	220.00	LDF7P-50A	13.37	300.00	247.20	12	2		No	TMBX-6517-R2M	

Transmission Lines Details

No.	Desc.	Width (in)	Depth (in)	Unit Mass (lb/ft)	Line Spacing (in)	Row Spacing (in)
1	LDF7P-50A	2.01	2.01	0.92	2.500	2.000
2	LDF7P-50A	2.01	2.01	0.92	2.500	2.000
3	LDF7P-50A	2.01	2.01	0.92	2.500	2.000

File: L:\Designs\08-0400\0471\J081119001-A\J081119001-A.out
Contract: S08-0471-A:J081119001-A
Revision: 0
Project: 250-FT:SST:13-SECTIONS
Site: 9LV0711 Jarvis Road- Muhlenburg C
Date and Time: 11/20/2008 11:10:37 AM
Engineer: HD/tw

Section G: WIND LOAD DATA

Load Combination: Wind Only

Wind Direction: 0.00 (deg)

Wind Pressure

Section	Panel	Bot Elev (ft)	Top Elev (ft)	Kz	Kzt	Wind Pressure (psf)	Ice Thickness (tiz) (in)
13	2	245.00	250.00	1.53	1.00	36.68	0.000
	1	240.00	245.00	1.53	1.00	36.52	0.000
12	4	235.00	240.00	1.52	1.00	36.36	0.000
	3	230.00	235.00	1.51	1.00	36.20	0.000
	2	225.00	230.00	1.50	1.00	36.03	0.000
	1	220.00	225.00	1.50	1.00	35.87	0.000
11	4	215.00	220.00	1.49	1.00	35.69	0.000
	3	210.00	215.00	1.48	1.00	35.52	0.000
	2	205.00	210.00	1.48	1.00	35.34	0.000
	1	200.00	205.00	1.47	1.00	35.16	0.000
10	2	190.00	200.00	1.46	1.00	34.88	0.000
	1	180.00	190.00	1.44	1.00	34.50	0.000
9	2	170.00	180.00	1.42	1.00	34.10	0.000
	1	160.00	170.00	1.41	1.00	33.68	0.000
8	2	150.00	160.00	1.39	1.00	33.24	0.000
	1	140.00	150.00	1.37	1.00	32.77	0.000
7	2	130.00	140.00	1.35	1.00	32.28	0.000
	1	120.00	130.00	1.33	1.00	31.77	0.000
6	2	110.00	120.00	1.30	1.00	31.21	0.000
	1	100.00	110.00	1.28	1.00	30.62	0.000
5	2	90.00	100.00	1.25	1.00	29.98	0.000
	1	80.00	90.00	1.22	1.00	29.29	0.000
4	1	60.00	80.00	1.17	1.00	28.12	0.000
3	1	40.00	60.00	1.09	1.00	26.19	0.000
2	1	20.00	40.00	0.98	1.00	23.52	0.000
1	1	0.00	20.00	0.85	1.00	20.36	0.000

Calculated Effective Wind Areas

Sec.	Pan.	Flat Area (ft^2)	App.Flat Area (ft^2)	Round Area (ft^2)	App.Round Area (ft^2)	Area Ice (ft^2)	Solid. Ratio	Flat Drag	Round Drag	Flat Dir	Round Dir	Eff. Area (ft^2)
13	2	3.33	0.00	1.67	0.00	0.00	0.24	2.47	1.44	0.80	1.00	8.98
	1	2.68	0.00	1.67	0.00	0.00	0.21	2.57	1.48	0.80	1.00	7.97
12	4	2.61	0.00	1.67	0.00	0.00	0.19	2.62	1.50	0.80	1.00	7.98
	3	2.71	0.00	1.67	0.00	0.00	0.18	2.67	1.52	0.80	1.00	8.34
	2	2.82	0.00	1.67	0.00	0.00	0.17	2.71	1.55	0.80	1.00	8.70
	1	2.93	0.00	1.67	0.00	0.00	0.16	2.75	1.56	0.80	1.00	9.06
11	4	3.05	0.00	1.88	0.00	0.00	0.15	2.76	1.57	0.80	1.00	9.69
	3	3.17	0.00	1.88	0.00	0.00	0.15	2.79	1.58	0.80	1.00	10.04
	2	3.29	0.00	1.88	0.00	0.00	0.14	2.81	1.59	0.80	1.00	10.40
	1	3.41	0.00	1.88	0.00	0.00	0.13	2.83	1.60	0.80	1.00	10.75
10	2	7.86	0.00	4.17	0.00	0.00	0.14	2.82	1.59	0.80	1.00	24.35
	1	8.30	0.00	4.17	0.00	0.00	0.13	2.85	1.61	0.80	1.00	25.68
9	2	8.90	0.00	4.59	0.00	0.00	0.13	2.86	1.62	0.80	1.00	27.82
	1	9.38	0.00	4.59	0.00	0.00	0.12	2.89	1.63	0.80	1.00	29.16
8	2	11.83	0.00	5.01	0.00	0.00	0.13	2.84	1.61	0.80	1.00	34.92

6	TMBX-6517-R2M	4	AM110-P-12'	235	0.00	-24.92	0.00	-0.90	-0.87	1.79	3.10	-6.14
7	TMBX-6517-R2M	4	AM110-P-12'	235	0.00	-24.92	0.00	-0.90	-0.87	1.79	-3.10	6.14
8	TMBX-6517-R2M	4	AM110-P-12'	220	0.00	-30.28	0.00	-1.08	-0.87	-3.88	0.00	0.00
9	TMBX-6517-R2M	4	AM110-P-12'	220	0.00	-24.92	0.00	-0.89	-0.87	1.94	3.36	-6.57
10	TMBX-6517-R2M	4	AM110-P-12'	220	0.00	-24.92	0.00	-0.89	-0.87	1.94	-3.36	6.57

Load Combination Wind Only - Max Tension

Wind Direction 0.00 (deg)

Wind Pressure

Section	Panel	Bot Elev (ft)	Top Elev (ft)	Kz	Kzt	Wind Pressure (psf)	Ice Thickness (tiz) (in)
13	2	245.00	250.00	1.53	1.00	36.68	0.000
	1	240.00	245.00	1.53	1.00	36.52	0.000
12	4	235.00	240.00	1.52	1.00	36.36	0.000
	3	230.00	235.00	1.51	1.00	36.20	0.000
	2	225.00	230.00	1.50	1.00	36.03	0.000
	1	220.00	225.00	1.50	1.00	35.87	0.000
11	4	215.00	220.00	1.49	1.00	35.69	0.000
	3	210.00	215.00	1.48	1.00	35.52	0.000
	2	205.00	210.00	1.48	1.00	35.34	0.000
	1	200.00	205.00	1.47	1.00	35.16	0.000
10	2	190.00	200.00	1.46	1.00	34.88	0.000
	1	180.00	190.00	1.44	1.00	34.50	0.000
9	2	170.00	180.00	1.42	1.00	34.10	0.000
	1	160.00	170.00	1.41	1.00	33.68	0.000
8	2	150.00	160.00	1.39	1.00	33.24	0.000
	1	140.00	150.00	1.37	1.00	32.77	0.000
7	2	130.00	140.00	1.35	1.00	32.28	0.000
	1	120.00	130.00	1.33	1.00	31.77	0.000
6	2	110.00	120.00	1.30	1.00	31.21	0.000
	1	100.00	110.00	1.28	1.00	30.62	0.000
5	2	90.00	100.00	1.25	1.00	29.98	0.000
	1	80.00	90.00	1.22	1.00	29.29	0.000
4	1	60.00	80.00	1.17	1.00	28.12	0.000
3	1	40.00	60.00	1.09	1.00	26.19	0.000
2	1	20.00	40.00	0.98	1.00	23.52	0.000
1	1	0.00	20.00	0.85	1.00	20.36	0.000

Calculated Effective Wind Areas

Sec.	Pan.	Flat Area (ft^2)	App.Flat Area (ft^2)	Round Area (ft^2)	App.Round Area (ft^2)	Area Ice (ft^2)	Solid. Ratio	Flat Drag	Round Drag	Flat Dir	Round Dir	Eff. Area (ft^2)
13	2	3.33	0.00	1.67	0.00	0.00	0.24	2.47	1.44	0.80	1.00	8.98
	1	2.68	0.00	1.67	0.00	0.00	0.21	2.57	1.48	0.80	1.00	7.97
12	4	2.61	0.00	1.67	0.00	0.00	0.19	2.62	1.50	0.80	1.00	7.98
	3	2.71	0.00	1.67	0.00	0.00	0.18	2.67	1.52	0.80	1.00	8.34
	2	2.82	0.00	1.67	0.00	0.00	0.17	2.71	1.55	0.80	1.00	8.70
	1	2.93	0.00	1.67	0.00	0.00	0.16	2.75	1.56	0.80	1.00	9.06
11	4	3.05	0.00	1.88	0.00	0.00	0.15	2.76	1.57	0.80	1.00	9.69
	3	3.17	0.00	1.88	0.00	0.00	0.15	2.79	1.58	0.80	1.00	10.04

					(ft^2)	(ft^2)						
1	Lightning Rod	1		250	0.00	-0.75	0.00	-0.03	-0.01	0.00	0.00	0.00
2	TMBX-6517-R2M	4	AM110-P-12'	250	0.00	-30.28	0.00	-1.11	-0.87	-3.28	0.00	0.00
3	TMBX-6517-R2M	4	AM110-P-12'	250	0.00	-24.92	0.00	-0.92	-0.87	1.64	2.84	-5.70
4	TMBX-6517-R2M	4	AM110-P-12'	250	0.00	-24.92	0.00	-0.92	-0.87	1.64	-2.84	5.70
5	TMBX-6517-R2M	4	AM110-P-12'	235	0.00	-30.28	0.00	-1.10	-0.87	-3.58	0.00	0.00
6	TMBX-6517-R2M	4	AM110-P-12'	235	0.00	-24.92	0.00	-0.90	-0.87	1.79	3.10	-6.14
7	TMBX-6517-R2M	4	AM110-P-12'	235	0.00	-24.92	0.00	-0.90	-0.87	1.79	-3.10	6.14
8	TMBX-6517-R2M	4	AM110-P-12'	220	0.00	-30.28	0.00	-1.08	-0.87	-3.88	0.00	0.00
9	TMBX-6517-R2M	4	AM110-P-12'	220	0.00	-24.92	0.00	-0.89	-0.87	1.94	3.36	-6.57
10	TMBX-6517-R2M	4	AM110-P-12'	220	0.00	-24.92	0.00	-0.89	-0.87	1.94	-3.36	6.57

Load Combination Wind and Ice

Wind Direction 0.00 (deg)

Wind Pressure

Section	Panel	Bot Elev (ft)	Top Elev (ft)	Kz	Kzt	Wind Pressure (psf)	Ice Thickness (tiz) (in)
13	2	245.00	250.00	1.53	1.00	2.55	1.836
	1	240.00	245.00	1.53	1.00	2.54	1.832
12	4	235.00	240.00	1.52	1.00	2.53	1.828
	3	230.00	235.00	1.51	1.00	2.51	1.824
	2	225.00	230.00	1.50	1.00	2.50	1.821
	1	220.00	225.00	1.50	1.00	2.49	1.816
11	4	215.00	220.00	1.49	1.00	2.48	1.812
	3	210.00	215.00	1.48	1.00	2.47	1.808
	2	205.00	210.00	1.48	1.00	2.45	1.804
	1	200.00	205.00	1.47	1.00	2.44	1.799
10	2	190.00	200.00	1.46	1.00	2.42	1.793
	1	180.00	190.00	1.44	1.00	2.40	1.783
9	2	170.00	180.00	1.42	1.00	2.37	1.773
	1	160.00	170.00	1.41	1.00	2.34	1.763
8	2	150.00	160.00	1.39	1.00	2.31	1.752
	1	140.00	150.00	1.37	1.00	2.28	1.740
7	2	130.00	140.00	1.35	1.00	2.24	1.728
	1	120.00	130.00	1.33	1.00	2.21	1.715
6	2	110.00	120.00	1.30	1.00	2.17	1.700
	1	100.00	110.00	1.28	1.00	2.13	1.685
5	2	90.00	100.00	1.25	1.00	2.08	1.668
	1	80.00	90.00	1.22	1.00	2.03	1.650
4	1	60.00	80.00	1.17	1.00	1.95	1.618
3	1	40.00	60.00	1.09	1.00	1.82	1.565
2	1	20.00	40.00	0.98	1.00	1.63	1.487
1	1	0.00	20.00	0.85	1.00	1.41	1.332

Calculated Effective Wind Areas

Sec.	Pan.	Flat Area (ft^2)	App.Flat Area (ft^2)	Round Area (ft^2)	App.Round Area (ft^2)	Area Ice (ft^2)	Solid. Ratio	Flat Drag	Round Drag	Flat Dir	Round Dir	Eff. Area (ft^2)
13	2	3.29	0.00	1.67	0.00	7.99	0.62	1.79	1.36	0.80	1.00	17.83

1	1	72.73	26.64	1.57	1.20	0.70	102.12

App. Concentrated Loads

Ant.	Description	Qty	Mount Desc.	Elev. (ft)	CaAc X-Dir E-W (ft^2)	CaAc Y-Dir N-S (ft^2)	XForce E-W (Kips)	YForce N-S (Kips)	ZForce (Kips)	M-x (kipsft)	M-y (kipsft)	M-z (kipsft)
1	Lightning Rod	1		250	0.00	-4.57	0.00	-0.01	-0.01	0.00	0.00	0.00
2	TMBX-6517-R2M	4	AM110-P-12'	250	0.00	-52.59	0.00	-0.13	-0.87	-3.28	0.00	0.00
3	TMBX-6517-R2M	4	AM110-P-12'	250	0.00	-49.07	0.00	-0.13	-0.87	1.64	2.84	-0.79
4	TMBX-6517-R2M	4	AM110-P-12'	250	0.00	-49.07	0.00	-0.13	-0.87	1.64	-2.84	0.79
5	TMBX-6517-R2M	4	AM110-P-12'	235	0.00	-52.45	0.00	-0.13	-0.87	-3.58	0.00	0.00
6	TMBX-6517-R2M	4	AM110-P-12'	235	0.00	-48.92	0.00	-0.12	-0.87	1.79	3.10	-0.85
7	TMBX-6517-R2M	4	AM110-P-12'	235	0.00	-48.92	0.00	-0.12	-0.87	1.79	-3.10	0.85
8	TMBX-6517-R2M	4	AM110-P-12'	220	0.00	-52.31	0.00	-0.13	-0.87	-3.88	0.00	0.00
9	TMBX-6517-R2M	4	AM110-P-12'	220	0.00	-48.76	0.00	-0.12	-0.87	1.94	3.36	-0.91
10	TMBX-6517-R2M	4	AM110-P-12'	220	0.00	-48.76	0.00	-0.12	-0.87	1.94	-3.36	0.91

Load Combination Wind Only - Serviceability

Wind Direction 0.00 (deg)

Wind Pressure

Section	Panel	Bot Elev (ft)	Top Elev (ft)	Kz	Kzt	Wind Pressure (psf)	Ice Thickness (tiz) (in)
13	2	245.00	250.00	1.53	1.00	10.19	0.000
	1	240.00	245.00	1.53	1.00	10.14	0.000
12	4	235.00	240.00	1.52	1.00	10.10	0.000
	3	230.00	235.00	1.51	1.00	10.06	0.000
	2	225.00	230.00	1.50	1.00	10.01	0.000
	1	220.00	225.00	1.50	1.00	9.96	0.000
11	4	215.00	220.00	1.49	1.00	9.92	0.000
	3	210.00	215.00	1.48	1.00	9.87	0.000
	2	205.00	210.00	1.48	1.00	9.82	0.000
	1	200.00	205.00	1.47	1.00	9.77	0.000
10	2	190.00	200.00	1.46	1.00	9.69	0.000
	1	180.00	190.00	1.44	1.00	9.58	0.000
9	2	170.00	180.00	1.42	1.00	9.47	0.000
	1	160.00	170.00	1.41	1.00	9.35	0.000
8	2	150.00	160.00	1.39	1.00	9.23	0.000
	1	140.00	150.00	1.37	1.00	9.10	0.000
7	2	130.00	140.00	1.35	1.00	8.97	0.000
	1	120.00	130.00	1.33	1.00	8.82	0.000
6	2	110.00	120.00	1.30	1.00	8.67	0.000
	1	100.00	110.00	1.28	1.00	8.51	0.000
5	2	90.00	100.00	1.25	1.00	8.33	0.000
	1	80.00	90.00	1.22	1.00	8.14	0.000
4	1	60.00	80.00	1.17	1.00	7.81	0.000
3	1	40.00	60.00	1.09	1.00	7.28	0.000
2	1	20.00	40.00	0.98	1.00	6.53	0.000
1	1	0.00	20.00	0.85	1.00	5.65	0.000

6	2	29.71	0.00	1.58	1.20	0.66	31.14
	1	29.71	0.00	1.58	1.20	0.66	31.14
5	2	29.71	0.00	1.58	1.20	0.66	31.14
	1	29.71	0.00	1.58	1.20	0.66	31.14
4	1	59.41	0.00	1.58	1.20	0.66	62.28
3	1	59.41	0.00	1.58	1.20	0.66	62.28
2	1	59.41	0.00	1.58	1.20	0.66	62.28
1	1	59.41	0.00	1.58	1.20	0.66	62.28

App. Concentrated Loads

Ant.	Description	Qty	Mount Desc.	Elev. (ft)	CaAc X-Dir E-W (ft^2)	CaAc Y-Dir N-S (ft^2)	XForce E-W (Kips)	YForce N-S (Kips)	ZForce (Kips)	M-x (kipsft)	M-y (kipsft)	M-z (kipsft)
1	Lightning Rod	1		250	0.00	-0.75	0.00	-0.01	-0.01	0.00	0.00	0.00
2	TMBX-6517-R2M	4	AM110-P-12'	250	0.00	-30.28	0.00	-0.31	-0.87	-3.28	0.00	0.00
3	TMBX-6517-R2M	4	AM110-P-12'	250	0.00	-24.92	0.00	-0.25	-0.87	1.64	2.84	-1.58
4	TMBX-6517-R2M	4	AM110-P-12'	250	0.00	-24.92	0.00	-0.25	-0.87	1.64	-2.84	1.58
5	TMBX-6517-R2M	4	AM110-P-12'	235	0.00	-30.28	0.00	-0.31	-0.87	-3.58	0.00	0.00
6	TMBX-6517-R2M	4	AM110-P-12'	235	0.00	-24.92	0.00	-0.25	-0.87	1.79	3.10	-1.71
7	TMBX-6517-R2M	4	AM110-P-12'	235	0.00	-24.92	0.00	-0.25	-0.87	1.79	-3.10	1.71
8	TMBX-6517-R2M	4	AM110-P-12'	220	0.00	-30.28	0.00	-0.30	-0.87	-3.88	0.00	0.00
9	TMBX-6517-R2M	4	AM110-P-12'	220	0.00	-24.92	0.00	-0.25	-0.87	1.94	3.36	-1.82
10	TMBX-6517-R2M	4	AM110-P-12'	220	0.00	-24.92	0.00	-0.25	-0.87	1.94	-3.36	1.82

33	140.0	8.8	8.7	-0.1	0.56	0.55	-0.01
30	130.0	7.6	7.5	-0.1	0.52	0.52	0.01
27	120.0	6.5	6.4	-0.1	0.46	0.46	-0.01
24	110.0	5.5	5.5	-0.1	0.43	0.42	0.01
21	100.0	4.6	4.6	-0.1	0.37	0.37	-0.01
18	90.0	3.9	3.8	-0.1	0.34	0.34	0.01
15	80.0	3.1	3.1	-0.1	0.31	0.30	-0.01
12	60.0	1.9	1.8	0.0	0.21	0.21	0.03
9	40.0	1.0	0.9	0.0	0.16	0.15	-0.01
6	20.0	0.3	-0.3	0.0	0.07	-0.07	0.03
3	0.0	0.0	0.0	0.0	0.00	0.00	0.00

Load Combination Wind Only - Max Tension

Wind Direction Maximum displacements

Node	Elev. (ft)	N-S Disp (in)	W-E Disp (in)	Vert.Disp (in)	N-S Rot (Deg)	W-E Rot (Deg)	Twist (Deg)
81	250.0	29.1	29.0	-0.1	1.12	1.13	0.03
78	245.0	27.9	27.8	-0.1	1.12	1.13	0.03
75	240.0	26.7	26.7	-0.1	1.10	1.11	-0.03
72	235.0	25.6	25.5	-0.1	1.10	1.10	0.03
69	230.0	24.4	24.3	-0.1	1.08	1.08	-0.03
66	225.0	23.3	23.2	-0.1	1.04	1.05	0.03
63	220.0	22.2	22.1	-0.1	1.03	1.03	-0.02
60	215.0	21.1	21.0	-0.1	1.00	1.00	0.02
57	210.0	20.1	20.0	-0.1	0.97	0.97	-0.02
54	205.0	19.1	19.0	-0.1	0.94	0.94	0.02
51	200.0	18.1	18.0	-0.1	0.89	0.89	-0.02
48	190.0	16.2	16.1	-0.1	0.82	0.82	0.03
45	180.0	14.5	14.4	-0.1	0.77	0.77	-0.02
42	170.0	12.9	12.8	-0.1	0.71	0.71	0.02
39	160.0	11.4	11.3	-0.1	0.65	0.65	-0.01
36	150.0	10.0	9.9	-0.1	0.60	0.60	0.01
33	140.0	8.8	8.7	-0.1	0.56	0.55	-0.01
30	130.0	7.6	7.5	-0.1	0.52	0.52	0.01
27	120.0	6.5	6.4	-0.1	0.46	0.46	-0.01
24	110.0	5.5	5.5	-0.1	0.43	0.42	0.01
21	100.0	4.6	4.6	-0.1	0.37	0.37	-0.01
18	90.0	3.9	3.8	0.0	0.34	0.34	0.01
15	80.0	3.1	3.1	0.0	0.31	0.30	-0.01
12	60.0	1.9	1.8	0.0	0.21	0.21	0.03
9	40.0	1.0	0.9	0.0	0.16	0.15	-0.01
6	20.0	0.3	-0.3	0.0	0.07	-0.07	0.03
3	0.0	0.0	0.0	0.0	0.00	0.00	0.00

Load Combination Wind and Ice

Wind Direction Maximum displacements

Node	Elev. (ft)	N-S Disp (in)	W-E Disp (in)	Vert.Disp (in)	N-S Rot (Deg)	W-E Rot (Deg)	Twist (Deg)
81	250.0	3.6	3.6	-0.4	0.14	0.14	0.00
78	245.0	3.5	3.4	-0.4	0.14	0.14	0.00
75	240.0	3.3	3.3	-0.4	0.14	0.14	0.00
72	235.0	3.2	3.1	-0.4	0.14	0.14	0.00

3	0.0	0.0	0.0	0.0	0.00	0.00	0.00

4	1	60.00	Diag	2L2 1/2x2 1/2x3/16	29.01	182.9	12.2	43.2	11.9	11.8	0.98
3	1	40.00	Diag	2L3x3x3/16	30.48	155.8	20.3	45.7	12.4	12.3	0.61
2	1	20.00	Diag	2L3x3x3/16	32.02	161.5	18.9	45.7	12.9	12.8	0.68
1	1	0.00	Diag	2L3x3x3/16	33.61	167.4	17.6	45.7	13.2	13.2	0.75
13	2	245.00	Horiz	L2x2x3/16	4.00	113.8	11.6	8.3	0.7	0.7	0.08
10	2	190.00	SecH1	L2x2x3/16	4.26	131.1	9.3	8.3	2.2	2.2	0.26
10	1	180.00	SecH1	L2x2x3/16	4.76	146.4	7.5	8.3	2.6	2.6	0.35
9	2	170.00	SecH1	L2x2x3/16	5.26	161.7	6.1	8.3	2.8	2.8	0.45
9	1	160.00	SecH1	L2x2x3/16	5.75	177.0	5.1	8.3	3.1	3.1	0.61
8	2	150.00	SecH1	L2 1/2x2 1/2x3/16	6.25	153.1	8.7	10.9	3.3	3.3	0.38
8	1	140.00	SecH1	L2 1/2x2 1/2x3/16	6.75	165.4	7.4	10.9	3.6	3.6	0.48
7	2	130.00	SecH1	L2 1/2x2 1/2x3/16	7.25	177.6	6.4	10.9	3.7	3.7	0.57
7	1	120.00	SecH1	L2 1/2x2 1/2x3/16	7.75	189.8	5.6	10.9	4.0	4.0	0.71
6	2	110.00	SecH1	L3x3x3/16	8.25	167.8	8.7	11.1	4.3	4.3	0.49
6	1	100.00	SecH1	L3x3x3/16	8.75	178.0	7.8	11.1	4.6	4.6	0.60
5	2	90.00	SecH1	L3x3x3/16	9.25	188.2	7.0	11.1	4.7	4.7	0.68
5	1	80.00	SecH1	L3x3x3/16	9.75	198.3	6.3	11.1	5.0	5.0	0.80
4	1	60.00	SecH1	L3x3x1/4	10.51	213.8	7.1	14.8	5.4	5.4	0.76
4	1	60.00	SecH2	L2x2x3/16	5.26	161.7	6.1	8.3	5.4	5.4	0.88
4	1	60.00	SecH3	L2x2x3/16	5.26	161.7	6.1	8.3	5.4	5.4	0.88
4	1	60.00	SecD1	L2 1/2x2 1/2x3/16	6.91	169.1	7.1	10.9	3.7	3.7	0.52
4	1	60.00	SecD2	L2 1/2x2 1/2x3/16	7.60	186.0	5.9	10.9	3.7	3.7	0.63
4	1	60.00	PlanH1	L3x3x3/16	10.48	213.1	5.4	9.8	0.1	0.1	0.01
3	1	40.00	SecH1	L3 1/2x3 1/2x1/4	11.51	200.1	9.5	14.8	5.7	5.7	0.60
3	1	40.00	SecH2	L2 1/2x2 1/2x3/16	5.75	140.9	10.2	10.9	5.7	5.7	0.56
3	1	40.00	SecH3	L2 1/2x2 1/2x3/16	5.75	140.9	10.2	10.9	5.7	5.7	0.56
3	1	40.00	SecD1	L2 1/2x2 1/2x3/16	7.29	178.5	6.4	10.9	3.8	3.8	0.60
3	1	40.00	SecD2	L2 1/2x2 1/2x3/16	7.95	194.8	5.4	10.9	3.8	3.8	0.71
3	1	40.00	PlanH1	L3x3x3/16	11.48	233.5	4.5	9.8	0.1	0.1	0.02
2	1	20.00	SecH1	L3 1/2x3 1/2x1/4	12.51	217.5	8.1	14.8	6.3	6.3	0.78
2	1	20.00	SecH2	L2 1/2x2 1/2x3/16	6.25	153.1	8.7	10.9	6.3	6.3	0.73
2	1	20.00	SecH3	L2 1/2x2 1/2x3/16	6.25	153.1	8.7	10.9	6.3	6.3	0.73
2	1	20.00	SecD1	L2 1/2x2 1/2x3/16	7.68	188.2	5.7	10.9	4.1	4.1	0.71
2	1	20.00	SecD2	L2 1/2x2 1/2x3/16	8.33	203.9	4.9	10.9	4.1	4.1	0.83
2	1	20.00	PlanH1	L3 1/2x3 1/2x1/4	12.48	217.0	8.1	13.1	0.1	0.1	0.01
1	1	0.00	SecH1	L4x4x1/4	13.51	202.6	10.7	14.8	6.6	6.6	0.62
1	1	0.00	SecH2	L2 1/2x2 1/2x3/16	6.75	165.4	7.4	10.9	6.6	6.6	0.89
1	1	0.00	SecH3	L2 1/2x2 1/2x3/16	6.75	165.4	7.4	10.9	6.6	6.6	0.89
1	1	0.00	SecD1	L3x3x3/16	8.09	164.5	9.1	11.1	4.1	4.1	0.45
1	1	0.00	SecD2	L3x3x3/16	8.71	177.2	7.8	11.1	4.1	4.1	0.53
1	1	0.00	PlanH1	L3 1/2x3 1/2x1/4	13.48	234.5	6.9	13.1	0.1	0.1	0.01

Load Combination Wind Only
Wind Direction Maximum

Sec	Pnl	Elev (ft)	MType	Desc.	Len (ft)	kl/r	Gov. comp. cap. (Kips)	Gov. tens. cap. (Kips)	Max Compr. (Kips)	Max Tens. (Kips)	Asses. Ratio
13	2	245.00	Leg	SR 2	5.00	120.0	49.3	82.3	3.5	1.1	0.07
13	1	240.00	Leg	SR 2	5.00	120.0	49.3	82.3	8.9	6.3	0.18
12	4	235.00	Leg	SR 2	5.01	120.2	49.1	82.3	14.2	11.3	0.29
12	3	230.00	Leg	SR 2	5.01	120.2	49.1	82.3	21.9	16.2	0.45

7	2	130.00	SecH1	L2 1/2x2 1/2x3/16	7.25	177.6	6.4	10.9	3.7	3.7	0.57
7	1	120.00	SecH1	L2 1/2x2 1/2x3/16	7.75	189.8	5.6	10.9	4.0	4.0	0.71
6	2	110.00	SecH1	L3x3x3/16	8.25	167.8	8.7	11.1	4.3	4.3	0.49
6	1	100.00	SecH1	L3x3x3/16	8.75	178.0	7.8	11.1	4.6	4.6	0.60
5	2	90.00	SecH1	L3x3x3/16	9.25	188.2	7.0	11.1	4.7	4.7	0.68
5	1	80.00	SecH1	L3x3x3/16	9.75	198.3	6.3	11.1	5.0	5.0	0.80
4	1	60.00	SecH1	L3x3x1/4	10.51	213.8	7.1	14.8	5.4	5.4	0.76
4	1	60.00	SecH2	L2x2x3/16	5.26	161.7	6.1	8.3	5.4	5.4	0.88
4	1	60.00	SecH3	L2x2x3/16	5.26	161.7	6.1	8.3	5.4	5.4	0.88
4	1	60.00	SecD1	L2 1/2x2 1/2x3/16	6.91	169.1	7.1	10.9	3.7	3.7	0.52
4	1	60.00	SecD2	L2 1/2x2 1/2x3/16	7.60	186.0	5.9	10.9	3.7	3.7	0.63
4	1	60.00	PlanH1	L3x3x3/16	10.48	213.1	5.4	9.8	0.1	0.1	0.01
3	1	40.00	SecH1	L3 1/2x3 1/2x1/4	11.51	200.1	9.5	14.8	5.7	5.7	0.60
3	1	40.00	SecH2	L2 1/2x2 1/2x3/16	5.75	140.9	10.2	10.9	5.7	5.7	0.56
3	1	40.00	SecH3	L2 1/2x2 1/2x3/16	5.75	140.9	10.2	10.9	5.7	5.7	0.56
3	1	40.00	SecD1	L2 1/2x2 1/2x3/16	7.29	178.5	6.4	10.9	3.8	3.8	0.60
3	1	40.00	SecD2	L2 1/2x2 1/2x3/16	7.95	194.8	5.4	10.9	3.8	3.8	0.71
3	1	40.00	PlanH1	L3x3x3/16	11.48	233.5	4.5	9.8	0.1	0.1	0.02
2	1	20.00	SecH1	L3 1/2x3 1/2x1/4	12.51	217.5	8.1	14.8	6.3	6.3	0.78
2	1	20.00	SecH2	L2 1/2x2 1/2x3/16	6.25	153.1	8.7	10.9	6.3	6.3	0.73
2	1	20.00	SecH3	L2 1/2x2 1/2x3/16	6.25	153.1	8.7	10.9	6.3	6.3	0.73
2	1	20.00	SecD1	L2 1/2x2 1/2x3/16	7.68	188.2	5.7	10.9	4.1	4.1	0.71
2	1	20.00	SecD2	L2 1/2x2 1/2x3/16	8.33	203.9	4.9	10.9	4.1	4.1	0.83
2	1	20.00	PlanH1	L3 1/2x3 1/2x1/4	12.48	217.0	8.1	13.1	0.1	0.1	0.01
1	1	0.00	SecH1	L4x4x1/4	13.51	202.6	10.7	14.8	6.6	6.6	0.62
1	1	0.00	SecH2	L2 1/2x2 1/2x3/16	6.75	165.4	7.4	10.9	6.6	6.6	0.89
1	1	0.00	SecH3	L2 1/2x2 1/2x3/16	6.75	165.4	7.4	10.9	6.6	6.6	0.89
1	1	0.00	SecD1	L3x3x3/16	8.09	164.5	9.1	11.1	4.1	4.1	0.45
1	1	0.00	SecD2	L3x3x3/16	8.71	177.2	7.8	11.1	4.1	4.1	0.53
1	1	0.00	PlanH1	L3 1/2x3 1/2x1/4	13.48	234.5	6.9	13.1	0.1	0.1	0.01

Load Combination Wind Only - Max Tension
Wind Direction Maximum

Sec	Pnl	Elev (ft)	MType	Desc.	Len (ft)	kl/r	Gov. comp. cap. (Kips)	Gov. tens. cap. (Kips)	Max Compr. (Kips)	Max Tens. (Kips)	Asses. Ratio
13	2	245.00	Leg	SR 2	5.00	120.0	49.3	82.3	3.2	1.4	0.06
13	1	240.00	Leg	SR 2	5.00	120.0	49.3	82.3	8.6	6.7	0.18
12	4	235.00	Leg	SR 2	5.01	120.2	49.1	82.3	13.9	11.6	0.28
12	3	230.00	Leg	SR 2	5.01	120.2	49.1	82.3	21.2	16.8	0.43
12	2	225.00	Leg	SR 2	5.01	120.2	49.1	82.3	30.0	25.1	0.61
12	1	220.00	Leg	SR 2	5.01	120.2	49.1	82.3	36.9	31.6	0.75
11	4	215.00	Leg	SR 2 1/4	5.01	106.8	77.8	123.5	46.2	38.8	0.59
11	3	210.00	Leg	SR 2 1/4	5.01	106.8	77.8	123.5	56.0	47.9	0.72
11	2	205.00	Leg	SR 2 1/4	5.01	106.8	77.8	123.5	64.6	55.9	0.83
11	1	200.00	Leg	SR 2 1/4	5.01	106.8	77.8	123.5	73.6	64.2	0.95
10	2	190.00	Leg	SR 2 1/2	10.02	101.8	103.6	182.5	85.4	75.1	0.82
10	1	180.00	Leg	SR 2 1/2	10.02	101.2	104.5	182.5	102.0	90.0	0.98
9	2	170.00	Leg	SR 2 3/4	10.02	91.6	144.7	182.5	117.3	103.9	0.81
9	1	160.00	Leg	SR 2 3/4	10.02	91.3	145.4	182.5	133.0	117.8	0.91
8	2	150.00	Leg	SR 3	10.02	83.4	191.5	251.8	148.0	131.1	0.77
8	1	140.00	Leg	SR 3	10.02	83.0	192.2	251.8	163.5	144.5	0.85
7	2	130.00	Leg	SR 3 1/4	10.02	76.5	243.5	330.3	178.7	157.7	0.73

3	1	40.00	SecH2	L2 1/2x2 1/2x3/16	5.75	140.9	10.2	10.9	5.7	5.7	0.55
3	1	40.00	SecH3	L2 1/2x2 1/2x3/16	5.75	140.9	10.2	10.9	5.7	5.7	0.55
3	1	40.00	SecD1	L2 1/2x2 1/2x3/16	7.29	178.5	6.4	10.9	3.7	3.7	0.59
3	1	40.00	SecD2	L2 1/2x2 1/2x3/16	7.95	194.8	5.4	10.9	3.7	3.7	0.70
3	1	40.00	PlanH1	L3x3x3/16	11.48	233.5	4.5	9.8	0.1	0.1	0.02
2	1	20.00	SecH1	L3 1/2x3 1/2x1/4	12.51	217.5	8.1	14.8	6.2	6.2	0.77
2	1	20.00	SecH2	L2 1/2x2 1/2x3/16	6.25	153.1	8.7	10.9	6.2	6.2	0.72
2	1	20.00	SecH3	L2 1/2x2 1/2x3/16	6.25	153.1	8.7	10.9	6.2	6.2	0.72
2	1	20.00	SecD1	L2 1/2x2 1/2x3/16	7.68	188.2	5.7	10.9	4.0	4.0	0.70
2	1	20.00	SecD2	L2 1/2x2 1/2x3/16	8.33	203.9	4.9	10.9	4.0	4.0	0.82
2	1	20.00	PlanH1	L3 1/2x3 1/2x1/4	12.48	217.0	8.1	13.1	0.1	0.1	0.01
1	1	0.00	SecH1	L4x4x1/4	13.51	202.6	10.7	14.8	6.5	6.5	0.61
1	1	0.00	SecH2	L2 1/2x2 1/2x3/16	6.75	165.4	7.4	10.9	6.5	6.5	0.88
1	1	0.00	SecH3	L2 1/2x2 1/2x3/16	6.75	165.4	7.4	10.9	6.5	6.5	0.88
1	1	0.00	SecD1	L3x3x3/16	8.09	164.5	9.1	11.1	4.1	4.1	0.45
1	1	0.00	SecD2	L3x3x3/16	8.71	177.2	7.8	11.1	4.1	4.1	0.52
1	1	0.00	PlanH1	L3 1/2x3 1/2x1/4	13.48	234.5	6.9	13.1	0.1	0.1	0.01

Load Combination Wind and Ice
Wind Direction Maximum

Sec	Pnl	Elev (ft)	MType	Desc.	Len (ft)	kl/r	Gov. comp. cap. (Kips)	Gov. tens. cap. (Kips)	Max Compr. (Kips)	Max Tens. (Kips)	Asses. Ratio
13	2	245.00	Leg	SR 2	5.00	120.0	49.3	82.3	3.5	0.0	0.07
13	1	240.00	Leg	SR 2	5.00	120.0	49.3	82.3	4.7	0.0	0.10
12	4	235.00	Leg	SR 2	5.01	120.2	49.1	82.3	5.9	0.0	0.12
12	3	230.00	Leg	SR 2	5.01	120.2	49.1	82.3	10.2	0.0	0.21
12	2	225.00	Leg	SR 2	5.01	120.2	49.1	82.3	12.1	0.0	0.25
12	1	220.00	Leg	SR 2	5.01	120.2	49.1	82.3	13.7	0.0	0.28
11	4	215.00	Leg	SR 2 1/4	5.01	106.8	77.8	123.5	18.3	0.0	0.23
11	3	210.00	Leg	SR 2 1/4	5.01	106.8	77.8	123.5	20.7	0.0	0.27
11	2	205.00	Leg	SR 2 1/4	5.01	106.8	77.8	123.5	22.6	0.0	0.29
11	1	200.00	Leg	SR 2 1/4	5.01	106.8	77.8	123.5	24.9	0.0	0.32
10	2	190.00	Leg	SR 2 1/2	10.02	101.8	103.6	182.5	27.6	0.0	0.27
10	1	180.00	Leg	SR 2 1/2	10.02	101.2	104.5	182.5	32.0	0.0	0.31
9	2	170.00	Leg	SR 2 3/4	10.02	91.6	144.7	182.5	35.9	0.0	0.25
9	1	160.00	Leg	SR 2 3/4	10.02	91.3	145.4	182.5	40.2	0.0	0.28
8	2	150.00	Leg	SR 3	10.02	83.4	191.5	251.8	44.1	0.0	0.23
8	1	140.00	Leg	SR 3	10.02	83.0	192.2	251.8	48.5	0.0	0.25
7	2	130.00	Leg	SR 3 1/4	10.02	76.5	243.5	330.3	52.7	0.0	0.22
7	1	120.00	Leg	SR 3 1/4	10.02	76.4	243.8	330.3	57.1	0.0	0.23
6	2	110.00	Leg	SR 3 1/4	10.02	76.2	244.2	330.3	61.5	0.0	0.25
6	1	100.00	Leg	SR 3 1/4	10.02	76.1	244.7	330.3	66.1	0.0	0.27
5	2	90.00	Leg	SR 3 1/2	10.02	70.5	301.2	330.3	70.6	0.0	0.23
5	1	80.00	Leg	SR 3 1/2	10.02	70.5	301.2	330.3	75.4	0.0	0.25
4	1	60.00	Leg	SR 3 1/2	20.03	68.7	306.8	330.3	82.3	0.0	0.27
3	1	40.00	Leg	SR 3 3/4	20.03	64.1	368.4	416.3	92.0	0.0	0.25
2	1	20.00	Leg	SR 3 3/4	20.03	64.1	368.4	416.3	101.7	0.0	0.28
1	1	0.00	Leg	SR 4	20.03	60.1	434.5	528.0	111.4	0.0	0.26
13	2	245.00	Diag	L1 3/4x1 3/4x3/16	6.40	100.2	11.8	17.9	0.2	0.3	0.02
13	1	240.00	Diag	L1 3/4x1 3/4x3/16	6.40	100.2	11.8	17.9	0.3	0.2	0.03
12	4	235.00	Diag	L1 3/4x1 3/4x3/16	6.56	139.3	7.2	17.9	0.4	0.1	0.05 *

1	1	0.00	SecH3	L2 1/2x2 1/2x3/16	6.75	165.4	7.4	10.9	1.9	1.9	0.26
1	1	0.00	SecD1	L3x3x3/16	8.09	164.5	9.1	11.1	1.2	1.2	0.13
1	1	0.00	SecD2	L3x3x3/16	8.71	177.2	7.8	11.1	1.2	1.2 *	0.15
1	1	0.00	PlanH1	L3 1/2x3 1/2x1/4	13.48	234.5	6.9	13.1	0.0	0.0	0.00

Note: The asterisk (*) placed after the assessment ratio marks cases where the diagonal's capacity in X-braced panel without support in crossover point is governing due to Tension/Compression ratio below limit.
The slenderness is calculated as per: ANSI/TIA-222-G, Table 4-6

Load Combination Wind Only - Serviceability
Wind Direction Maximum

Sec	Pnl	Elev (ft)	MType	Desc.	Len (ft)	kl/r	Gov. comp. cap. (Kips)	Gov. tens. cap. (Kips)	Max Compr. (Kips)	Max Tens. (Kips)	Asses. Ratio
13	2	245.00	Leg	SR 2	5.00	120.0	49.3	82.3	1.6	0.0	0.03
13	1	240.00	Leg	SR 2	5.00	120.0	49.3	82.3	3.2	1.1	0.06
12	4	235.00	Leg	SR 2	5.01	120.2	49.1	82.3	4.7	2.4	0.10
12	3	230.00	Leg	SR 2	5.01	120.2	49.1	82.3	7.5	3.0	0.15
12	2	225.00	Leg	SR 2	5.01	120.2	49.1	82.3	10.1	5.2	0.21
12	1	220.00	Leg	SR 2	5.01	120.2	49.1	82.3	12.1	6.9	0.25
11	4	215.00	Leg	SR 2 1/4	5.01	106.8	77.8	123.5	15.5	8.1	0.20
11	3	210.00	Leg	SR 2 1/4	5.01	106.8	77.8	123.5	18.4	10.4	0.24
11	2	205.00	Leg	SR 2 1/4	5.01	106.8	77.8	123.5	20.9	12.6	0.27
11	1	200.00	Leg	SR 2 1/4	5.01	106.8	77.8	123.5	23.6	14.7	0.30
10	2	190.00	Leg	SR 2 1/2	10.02	101.8	103.6	182.5	27.1	17.5	0.26
10	1	180.00	Leg	SR 2 1/2	10.02	101.2	104.5	182.5	32.1	21.3	0.31
9	2	170.00	Leg	SR 2 3/4	10.02	91.6	144.7	182.5	36.7	24.8	0.25
9	1	160.00	Leg	SR 2 3/4	10.02	91.3	145.4	182.5	41.4	28.2	0.29
8	2	150.00	Leg	SR 3	10.02	83.4	191.5	251.8	46.0	31.5	0.24
8	1	140.00	Leg	SR 3	10.02	83.0	192.2	251.8	50.8	34.8	0.26
7	2	130.00	Leg	SR 3 1/4	10.02	76.5	243.5	330.3	55.5	38.0	0.23
7	1	120.00	Leg	SR 3 1/4	10.02	76.4	243.8	330.3	60.3	41.2	0.25
6	2	110.00	Leg	SR 3 1/4	10.02	76.2	244.2	330.3	65.1	44.3	0.27
6	1	100.00	Leg	SR 3 1/4	10.02	76.1	244.7	330.3	70.1	47.4	0.29
5	2	90.00	Leg	SR 3 1/2	10.02	70.5	301.2	330.3	75.1	50.5	0.25
5	1	80.00	Leg	SR 3 1/2	10.02	70.5	301.2	330.3	80.2	53.6	0.27
4	1	60.00	Leg	SR 3 1/2	20.03	68.7	306.8	330.3	87.8	58.1	0.29
3	1	40.00	Leg	SR 3 3/4	20.03	64.1	368.4	416.3	98.2	64.0	0.27
2	1	20.00	Leg	SR 3 3/4	20.03	64.1	368.4	416.3	108.7	69.7	0.30
1	1	0.00	Leg	SR 4	20.03	60.1	434.5	528.0	119.3	75.1	0.27
13	2	245.00	Diag	L1 3/4x1 3/4x3/16	6.40	100.2	11.8	17.9	0.5	0.5	0.04
13	1	240.00	Diag	L1 3/4x1 3/4x3/16	6.40	100.2	11.8	17.9	0.6	0.6	0.05
12	4	235.00	Diag	L1 3/4x1 3/4x3/16	6.56	107.2	11.0	17.9	0.6	0.5	0.05
12	3	230.00	Diag	L1 3/4x1 3/4x3/16	6.90	112.0	10.4	17.9	1.0	0.9	0.09
12	2	225.00	Diag	L1 3/4x1 3/4x3/16	7.25	117.0	9.8	17.9	0.9	0.9	0.09
12	1	220.00	Diag	L1 3/4x1 3/4x3/16	7.62	122.2	9.1	17.9	0.9	0.9	0.10
11	4	215.00	Diag	L1 3/4x1 3/4x3/16	8.01	127.2	8.6	17.9	1.2	1.2	0.14
11	3	210.00	Diag	L1 3/4x1 3/4x3/16	8.40	132.7	7.9	17.9	1.2	1.2	0.15
11	2	205.00	Diag	L1 3/4x1 3/4x3/16	8.81	138.3	7.3	17.9	1.2	1.1	0.17
11	1	200.00	Diag	L1 3/4x1 3/4x3/16	9.22	144.1	6.7	17.9	1.2	1.2	0.17
10	2	190.00	Diag	L2 1/2x2 1/2x3/16	13.13	146.3	9.5	21.6	1.7	1.6	0.17

Section M: SECTION PROPERTIES DATA

Sec	Pan	Memb. Type	Steel Grade	Conn. Type	Bolts	Bolt Size (in)	Bolt Grade	End Dist. (in)	Gusset Thick. (in)	kl/r	Comp Cap. (Kips)	Tens Cap. (Kips)	Bolt Cap. (Kips)	Bear. Cap. (Kips)	Block Shear (Kips)
13	2	Leg	A572 gr.50	Tension	4	0.625	A325X	0.938	N/A	120.0	49.3	141.5	82.3T	N/A	N/A
13	2	Diag	A36	Bolted	2	0.500	A325X	1.125	0.250	100.2	11.8	17.9	19.4S	20.6	19.1
13	2	Horiz	A36	Bolted	1	0.625	A325X	1.250	0.250	113.8	11.6	20.3	15.2S	11.1	8.3
13	1	Leg	A572 gr.50	Tension	4	0.625	A325X	0.938	N/A	120.0	49.3	141.5	82.3T	N/A	N/A
13	1	Diag	A36	Bolted	2	0.500	A325X	1.125	0.250	100.2	11.8	17.9	19.4S	20.6	19.1
12	4	Leg	A572 gr.50	Tension	4	0.625	A325X	0.938	N/A	120.2	49.1	141.5	82.3T	N/A	N/A
12	4	Diag	A36	Bolted	2	0.500	A325X	1.125	0.250	107.2	11.0	17.9	19.4S	20.6	19.1
12	3	Leg	A572 gr.50	Tension	4	0.625	A325X	0.938	N/A	120.2	49.1	141.5	82.3T	N/A	N/A
12	3	Diag	A36	Bolted	2	0.500	A325X	1.125	0.250	112.0	10.4	17.9	19.4S	20.6	19.1
12	2	Leg	A572 gr.50	Tension	4	0.625	A325X	0.938	N/A	120.2	49.1	141.5	82.3T	N/A	N/A
12	2	Diag	A36	Bolted	2	0.500	A325X	1.125	0.250	117.0	9.8	17.9	19.4S	20.6	19.1
12	1	Leg	A572 gr.50	Tension	4	0.625	A325X	0.938	N/A	120.2	49.1	141.5	82.3T	N/A	N/A
12	1	Diag	A36	Bolted	2	0.500	A325X	1.125	0.250	122.2	9.1	17.9	19.4S	20.6	19.1
11	4	Leg	A572 gr.50	Tension	6	0.625	A325X	0.938	N/A	106.8	77.8	179.0	123.5T	N/A	N/A
11	4	Diag	A36	Bolted	2	0.500	A325X	1.125	0.250	127.2	8.6	17.9	19.4S	20.6	19.1
11	3	Leg	A572 gr.50	Tension	6	0.625	A325X	0.938	N/A	106.8	77.8	179.0	123.5T	N/A	N/A
11	3	Diag	A36	Bolted	2	0.500	A325X	1.125	0.250	132.7	7.9	17.9	19.4S	20.6	19.1
11	2	Leg	A572 gr.50	Tension	6	0.625	A325X	0.938	N/A	106.8	77.8	179.0	123.5T	N/A	N/A
11	2	Diag	A36	Bolted	2	0.500	A325X	1.125	0.250	138.3	7.3	17.9	19.4S	20.6	19.1
11	1	Leg	A572 gr.50	Tension	6	0.625	A325X	0.938	N/A	106.8	77.8	179.0	123.5T	N/A	N/A
11	1	Diag	A36	Bolted	2	0.500	A325X	1.125	0.250	144.1	6.7	17.9	19.4S	20.6	19.1
10	2	Leg	A572 gr.50	Tension	6	0.750	A325X	1.125	N/A	101.8	103.6	221.1	182.5T	N/A	N/A
10	2	Diag	A36	Bolted	2	0.625	A325X	1.250	0.250	146.3	9.5	26.5	30.4S	24.2	21.6
10	2	SecH1	A36	Bolted	1	0.625	A325X	1.250	0.250	131.1	9.3	20.3	15.2S	11.1	8.3
10	1	Leg	A572 gr.50	Tension	6	0.750	A325X	1.125	N/A	101.2	104.5	221.1	182.5T	N/A	N/A
10	1	Diag	A36	Bolted	2	0.625	A325X	1.250	0.250	152.7	8.7	26.5	30.4S	24.2	21.6
10	1	SecH1	A36	Bolted	1	0.625	A325X	1.250	0.250	146.4	7.5	20.3	15.2S	11.1	8.3
9	2	Leg	A572 gr.50	Tension	6	0.750	A325X	1.125	N/A	91.6	144.7	267.5	182.5T	N/A	N/A
9	2	Diag	A36	Bolted	2	0.625	A325X	1.250	0.250	159.2	8.0	26.5	30.4S	24.2	21.6
9	2	SecH1	A36	Bolted	1	0.625	A325X	1.250	0.250	161.7	6.1	20.3	15.2S	11.1	8.3
9	1	Leg	A572 gr.50	Tension	6	0.750	A325X	1.125	N/A	91.3	145.4	267.5	182.5T	N/A	N/A
9	1	Diag	A36	Bolted	2	0.625	A325X	1.250	0.250	166.2	7.4	26.5	30.4S	24.2	21.6
9	1	SecH1	A36	Bolted	1	0.625	A325X	1.250	0.250	177.0	5.1	20.3	15.2S	11.1	8.3
8	2	Leg	A572 gr.50	Tension	6	0.875	A325X	1.313	N/A	83.4	191.5	318.4	251.8T	N/A	N/A
8	2	Diag	A36	Bolted	2	0.625	A325X	1.250	0.250	148.4	11.2	32.8	30.4S	24.2	22.8
8	2	SecH1	A36	Bolted	1	0.625	A325X	1.250	0.250	153.1	8.7	26.5	15.2S	11.1	10.9
8	1	Leg	A572 gr.50	Tension	6	0.875	A325X	1.313	N/A	83.0	192.2	318.4	251.8T	N/A	N/A
8	1	Diag	A36	Bolted	2	0.625	A325X	1.250	0.250	154.7	10.3	32.8	30.4S	24.2	22.8
8	1	SecH1	A36	Bolted	1	0.625	A325X	1.250	0.250	165.4	7.4	26.5	15.2S	11.1	10.9
7	2	Leg	A572 gr.50	Tension	6	1.000	A325X	1.500	N/A	76.5	243.5	373.6	330.3T	N/A	N/A
7	2	Diag	A36	Bolted	2	0.625	A325X	1.250	0.250	160.9	9.5	32.8	30.4S	24.2	22.8
7	2	SecH1	A36	Bolted	1	0.625	A325X	1.250	0.250	177.6	6.4	26.5	15.2S	11.1	10.9
7	1	Leg	A572 gr.50	Tension	6	1.000	A325X	1.500	N/A	76.4	243.8	373.6	330.3T	N/A	N/A
7	1	Diag	A36	Bolted	2	0.625	A325X	1.250	0.250	167.4	8.8	32.8	30.4S	24.2	22.8
7	1	SecH1	A36	Bolted	1	0.625	A325X	1.250	0.250	189.8	5.6	26.5	15.2S	11.1	10.9

Section N: LEG REACTION DATA

Load Combination: Max Envelope
Wind Direction: Maximum

Force-Y Download (Kips)	Force-Y Uplift (Kips)	Shear-X (Kips)	Shear-Z (Kips)	Max Shear (Kips)
400.16	333.72			40.27

Load Combination: Wind Only
Wind Direction: Maximum

Support	Force-Y Download (Kips)	Force-Y Uplift (Kips)	Shear-X (Kips)	Shear-Z (Kips)	Max Shear (Kips)
	400.16	327.69			40.27

Load Combination: Wind Only - Max Tension
Wind Direction: Maximum

Support	Force-Y Download (Kips)	Force-Y Uplift (Kips)	Shear-X (Kips)	Shear-Z (Kips)	Max Shear (Kips)
	394.13	333.72			39.94

Load Combination: Wind and Ice
Wind Direction: Maximum

Support	Force-Y Download (Kips)	Force-Y Uplift (Kips)	Shear-X (Kips)	Shear-Z (Kips)	Max Shear (Kips)
	116.11	0.00			8.55

Load Combination: Wind Only - Serviceability
Wind Direction: Maximum

Support	Force-Y Download (Kips)	Force-Y Uplift (Kips)	Shear-X (Kips)	Shear-Z (Kips)	Max Shear (Kips)
	123.40	78.78			11.87

DESIGN SPECIFICATION

Design Standard: ANSI/TIA-222-G-2005 Add.1
Basic Wind Speed (No Ice) = 90.0 (mph)
Basic Wind Speed (With Ice) = 30.0 (mph)
Design Ice Thickness = 0.75 (in)
Structure Class = II
Exposure Category = C
Topographic Category = 1

Sct.	Length (ft)	Top Width (in)	Bot Width (in)
1	20.00	312.00	336.00
2	20.00	288.00	312.00
3	20.00	264.00	288.00
4	20.00	240.00	264.00
5	20.00	216.00	240.00
6	20.00	192.00	216.00
7	20.00	168.00	192.00
8	20.00	144.00	168.00
9	20.00	120.00	144.00
10	20.00	96.00	120.00
11	20.00	72.00	96.00
12	20.00	48.00	72.00
13	10.00	48.00	48.00

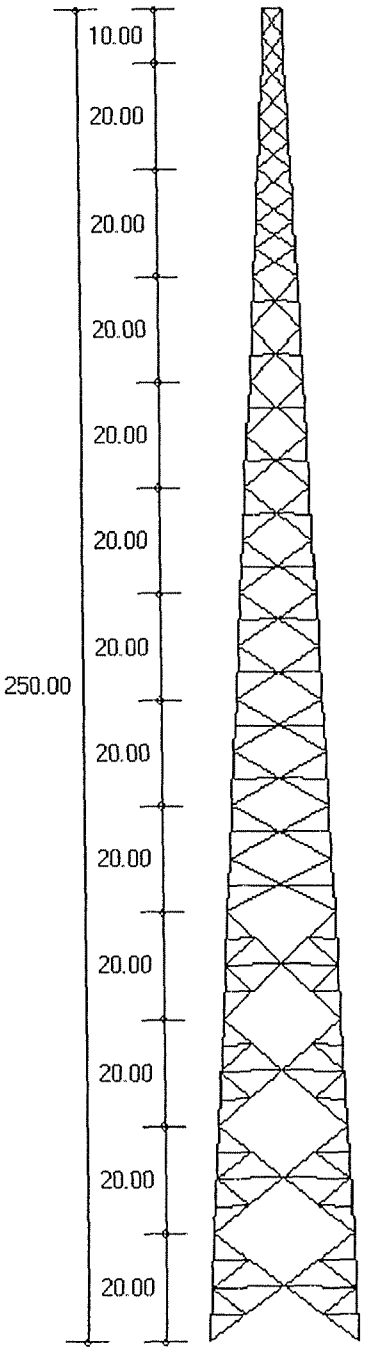

MAXIMUM BASE REACTIONS

	Bare	Iced
Download (Kips)	400.2	116.1
Uplift (Kips)	333.7	0.0
Shear (Kips)	40.3	8.6

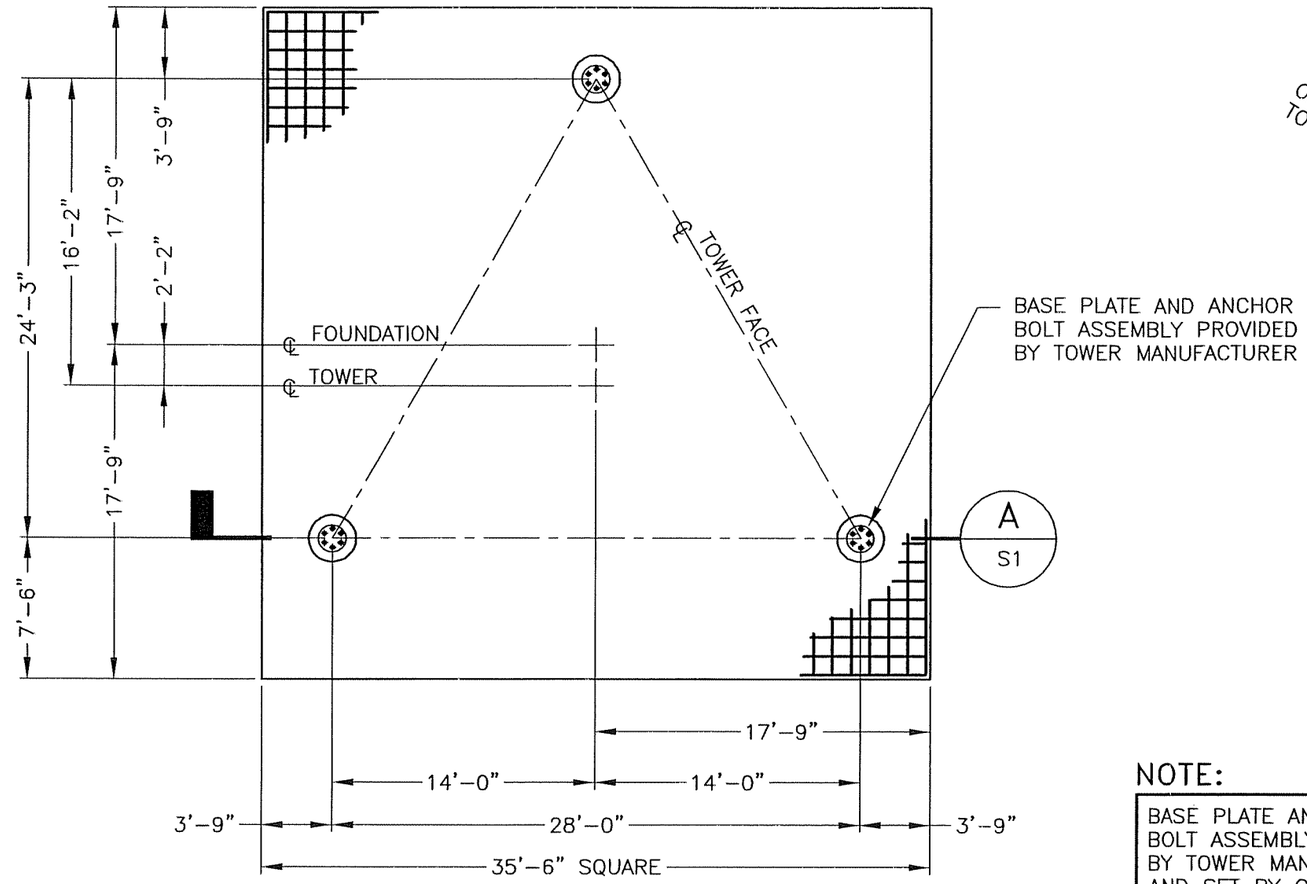

FOUNDATION PLAN

1/8"=1'-0"

NOTE:

BASE PLATE AND ANCHOR BOLT ASSEMBLY PROVIDED BY TOWER MANUFACTURER AND SET BY CONTRACTOR.

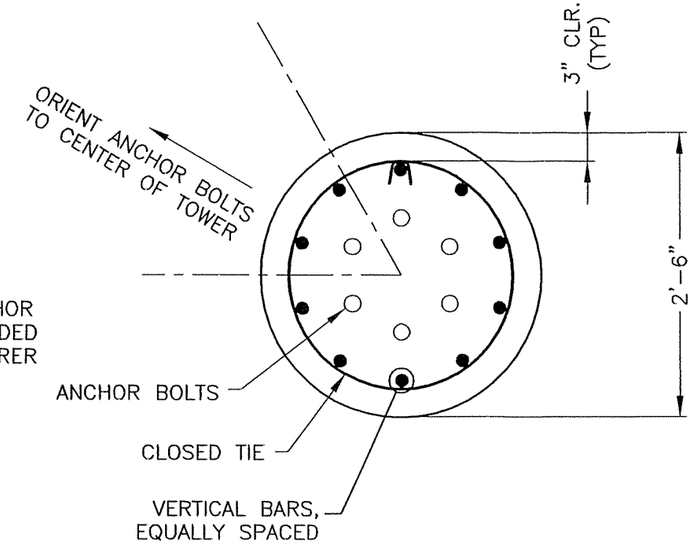

B / S1 SECTION

NTS

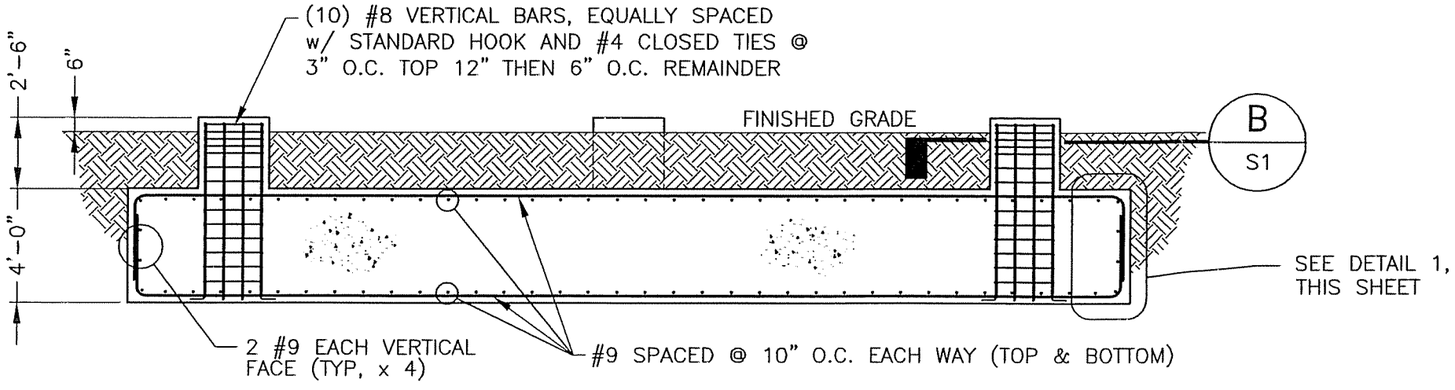

A / S1 SECTION

3/16"=1'-0"

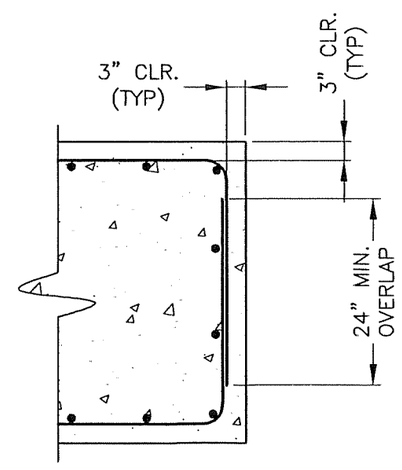

1 / S1 DETAIL

NTS

FACTORED FOUNDATION DESIGN LOADS:

OTM = 9,117.1 KIP-FT
TOTAL SHEAR = 68.1 KIPS
MAX. AXIAL = 54.5 KIPS

STATE OF KENTUCKY
BUFORD H. EVANS, JR.
19839
LICENSED PROFESSIONAL ENGINEER
12/15/08

WALKER ENGINEERING INCORPORATED
ATLANTA • BIRMINGHAM
8451 Dunwoody Place, Building B, Sandy Springs, Georgia 30350
(770) 641-7306 Fax: (770) 587-2196 www.walkerengineer.com

REV.	DATE	BY

ENGINEER: EKC
DRAWN BY: DJD
CHECKED BY: BHE
ORIG. ISSUE DATE: 12/12/08

SITE No: 9LV0711A
SITE NAME: JARVIS ROAD
WEI JOB No: 0812-562
MITTRIX
250ft FWT SST FOUNDATION
FOUNDATION PLAN, SECTION, & DETAIL
STATE ROUTE 601
MUHLENBERG COUNTY, GREENVILLE, KY

COPYRIGHT © 2008 BY WALKER ENGINEERING, INC. ALL RIGHTS RESERVED. THESE DOCUMENTS AS INSTRUMENTS OF SERVICE REMAIN THE PROPERTY OF THE ENGINEER AND NO PART MAY BE USED OR REPRODUCED WITHOUT WRITTEN PERMISSION OF THE COPYRIGHT OWNER.

SCALE: AS NOTED
THIS DWG SET CONSISTS OF: 2 SHEETS S1 THRU S2
DRAWING No.: S1

ACAD FILE: S:\PROJ\THRS\MITTRIX\DWGS\MITTRIX-300

GENERAL NOTES

G1. CONTRACTOR SHALL VERIFY ALL DIMENSIONS AND CONDITIONS. ALL DISCREPANCIES SHALL BE REPORTED IMMEDIATELY TO THE ENGINEER.

G2. THE SIZE AND SPACING OF STRUCTURAL ELEMENTS SHALL NOT BE CHANGED WITHOUT THE ENGINEER'S APPROVAL.

G3. DETAILS SHOWN ARE TYPICAL; THEREFORE, SIMILAR DETAILS APPLY TO SIMILAR CONDITIONS UNLESS OTHERWISE NOTED.

G4. THESE DRAWINGS DO NOT INCLUDE NECESSARY COMPONENTS FOR CONSTRUCTION SAFETY.

G5. ALL STRUCTURAL AND NON-STRUCTURAL ITEMS SHALL BE TEMPORARILY BRACED DURING CONSTRUCTION UNTIL ALL STRUCTURAL ELEMENTS THAT ARE REQUIRED FOR STABILITY, SUCH AS LATERAL BRACING, ANCHOR BOLTS, ETC., HAVE BEEN INSTALLED.

G6. CONTRACTOR SHALL VERIFY THE EXACT LOCATIONS OF EXISTING UTILITIES, GROUND DRAINS, DRAIN PIPES, VENTS, OR ANY OTHER MECHANICAL DEVICES PRESENT BEFORE COMMENCING WORK. CONTRACTOR SHALL PROTECT EXISTING FACILITIES, UTILITIES, COAX AND UTILITY LINES FROM DAMAGE. NOTIFY ENGINEER IMMEDIATELY OF ANY CONFLICTS ARISING FROM THIS VERIFICATION.

G7. INCORRECTLY FABRICATED, DAMAGED, MISFITTING OR NONCONFORMING MATERIALS OR CONDITIONS SHALL BE REPORTED TO THE OWNER PRIOR TO REMEDIAL OR CORRECTIVE ACTION.

G8. CONTRACTOR(S) SHALL COOPERATE WITH THE OWNER'S REPRESENTATIVE, AND COORDINATE HIS WORK WITH THE WORK OF OTHERS.

G9. CONSTRUCTION SHALL BE IN ACCORDANCE WITH APPLICABLE OSHA REGULATIONS, AND PER THE 2007 KENTUCKY BUILDING CODE (IBC 2006), AND ANSI/TIA-222-G, AND SHALL BE PERFORMED ONLY IN "GOOD WEATHER". GOOD WEATHER MEANS LITTLE OR NO WIND AND RAIN AND MINIMUM TEMPERATURE OF 50 DEGREES F. CONTACT ENGINEER FOR ADDITIONAL INSTRUCTIONS IF "GOOD WEATHER" CANNOT BE ACHIEVED.

G10. DESIGN WIND SPEED IS 90 MPH PER ANSI/TIA-222-G.

REINFORCED CONCRETE NOTES

C1. CONCRETE SHALL CONFORM TO ACI 301 & 318, AND SHALL HAVE A COMPRESSIVE STRENGTH OF 4000 PSI AFTER 28 DAYS.

C2. AGGREGATES SHALL BE CLEAN AND WELL-GRADED WITH A MAXIMUM SIZE OF 1-1/2". CONCRETE COMPRESSIVE TESTS SHALL CONFORM TO ASTM C39.

C3. USE NORMAL WEIGHT CONCRETE.

C4. USE ASTM A615 GRADE 60 FOR ALL CONCRETE REINFORCING STEEL.

C5. ALL CONCRETE REINFORCEMENT SHALL BE ACCURATELY PLACED, RIGIDLY SUPPORTED, AND FIRMLY TIED IN PLACE WITH BAR SUPPORTS AND SPACERS IN ACCORDANCE WITH ACI 301 & 318.

C6. MAXIMUM PERMISSIBLE SLUMP = 4".

C7. APPLY A WATER REPELLENT SEALANT TO ALL EXPOSED CONCRETE SURFACES. USE W.R. MEADOWS "SEAL-TIGHT #1200," OR EQUIVALENT, APPLIED IN STRICT ACCORDANCE WITH MANUFACTURER'S RECOMMENDATIONS.

C8. FIELD-VERIFY SOIL PARAMETERS PRIOR TO CONSTRUCTION, AND REPORT ANY DISCREPANCIES TO THE ENGINEER. SOIL PARAMETERS FOR FOUNDATION DESIGN WERE OBTAINED FROM THE REPORT BY ASHER, INC. ENVIRONMENTAL & ENGINEERING CONSULTING ON THE "GEOTECHNICAL ENGINEERING STUDY", ASHER PROJECT No. 008-221G, DATED 11/14/2008.

SHOP FABRICATION DRAWING SUBMITTAL

F1. THE GENERAL CONTRACTOR/CONSTRUCTION MANAGER IS RESPONSIBLE FOR ASSURING THAT ALL SUBMITTALS COMPLY WITH THE LATEST PROJECT PLANS, SPECIFICATIONS, GOVERNING CODES AND REGULATIONS, AND IS SOLELY RESPONSIBLE FOR CONFIRMING ALL QUANTITIES, DIMENSIONS, FABRICATION TECHNIQUES, AND COORDINATING WORK WITH ALL TRADES.

F2. SHOP DRAWINGS SHALL BE SUBMITTED IN A TIMELY MANNER TO ALLOW ADEQUATE TIME FOR PROCESSING.

F3. ALL SUBMITTALS ARE TO BE ACCOMPANIED BY A LETTER OF TRANSMITTAL.

F4. ALL SHOP DRAWINGS MUST BEAR EVIDENCE OF THE CONTRACTOR'S APPROVAL PRIOR TO SUBMITTAL.

F5. CONTRACTOR SHALL SUBMIT SHOP DRAWINGS TO THE ENGINEER PRIOR TO FABRICATION.

STATE OF KENTUCKY
BUFORD H. EVANS JR.
19839
LICENSED
PROFESSIONAL ENGINEER
12/15/08

WALKER ENGINEERING INCORPORATED
ATLANTA • BIRMINGHAM
8451 Dunwoody Place, Building 8, Sandy Springs, Georgia 30350
(770) 641-7306 Fax: (770) 587-2196 www.walkerengineer.com

REV.	DATE	BY

ENGINEER: EKC
DRAWN BY: DJD
CHECKED BY: BHE
ORIG. ISSUE DATE: 12/12/08

SITE NAME: JARVIS ROAD
SITE No: 9LV0711A
WEI JOB No: 0812-562 | -

MITTRIX
250ft FWT SST FOUNDATION
NOTES

STATE ROUTE 601
MUHLENBERG COUNTY, GREENVILLE, KY

COPYRIGHT © 2008 BY WALKER ENGINEERING, INC. ALL RIGHTS RESERVED. THESE DOCUMENTS AS INSTRUMENTS OF SERVICE REMAIN THE PROPERTY OF THE ENGINEER AND NO PART MAY BE USED OR REPRODUCED WITHOUT WRITTEN PERMISSION OF THE COPYRIGHT OWNER.

SCALE: AS NOTED
THIS DWG SET CONSISTS OF: 2 SHEETS S1 THRU S2
DRAWING No.: S2

ACAD FILE: S:\PROJ\TWRS\MITTRIX\DWGS\MITTRIX-300

T-Mobile USA Site Map
9LV0711 1 Mile Radius

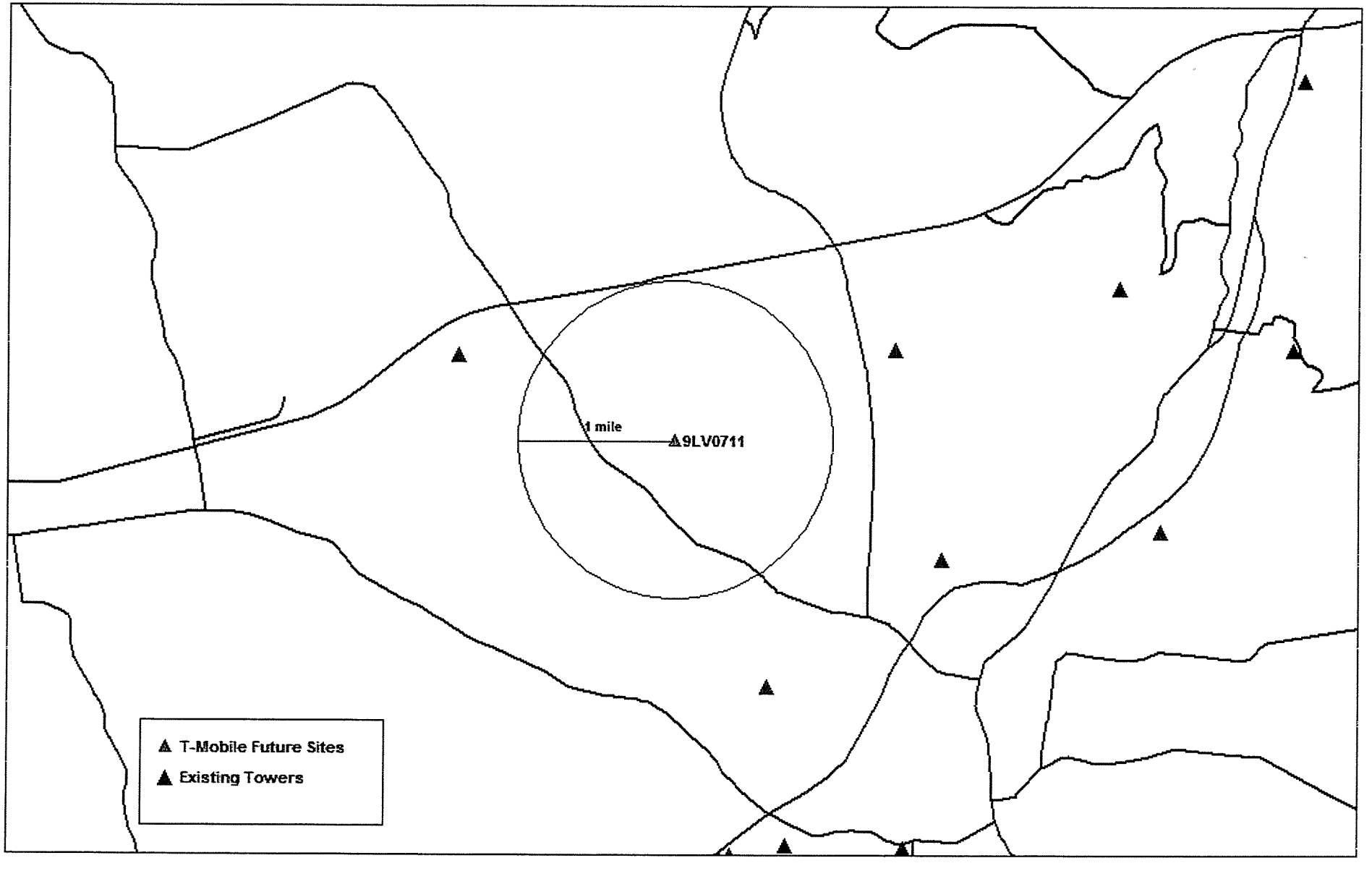

9LV0711A / Jarvis
2020 Highway 601
Greenville, Muhlenberg County, Kentucky 42345
Character of the Area Statement and
Co-Location Report

Powertel/Memphis Inc. d/b/a T-Mobile Kentucky ("T-Mobile") proposes to construct a 250' self support lattice tower with 5' lightning rods for a total height of 255'. The site will be at 2020 Highway 601 in Greenville, Muhlenberg County, Kentucky. The site is located on the southwestern slope of a wooded hillside in an open field with small brush and trees. The site is located within an old strip mine area abandoned in the 1950's.

T-Mobile intends to utilize this tower as an integral part of its network to enable T-Mobile to meet its customers' needs and expand its coverage in this area. This site, along with another tower in Central City and two additional co-location sites, will expand T-Mobile's coverage along the Wendell H. Ford Western Kentucky Parkway throughout Muhlenberg County.

This tower is being built because there are no towers within the area on which T-Mobile can co-locate, nor which are located where necessary to provide the coverage to work within T-Mobile's system. This site will have an emergency stand-by generator to enable it to continue functioning in the event of a power outage.

3225158_1.doc

G

Notice of Proposed Construction or Alteration - Off Airport

Project Name: T-MOB-000106431-08 **Sponsor:** T-Mobile

Details for Case : 9LV0711A Jarvis Road

Show Project Summary

Case Status

ASN:	2008-ASO-6027-OE	**Date Accepted:**	10/31/2008
Status:	Work In Progress	**Date Determined:**	
		Letters:	11/03/2008 ADD
		Documents	11/05/2008 9LV0711A Jar

Construction / Alteration Information

Notice Of:	Construction
Duration:	Permanent
if Temporary :	Months: Days:
Work Schedule - Start:	01/01/2009
Work Schedule - End:	03/31/2009
State Filing:	Filed with State

Structure Summary

Structure Type:	Antenna Tower
Structure Name:	9LV0711A Jarvis Road
FCC Number:	
Prior ASN:	

Structure Details

Latitude:	37° 13' 43.31" N
Longitude:	87° 12' 44.75" W
Horizontal Datum:	NAD83
Site Elevation (SE):	517 (nearest foot)
Structure Height (AGL):	260 (nearest foot)
Requested Marking/Lighting:	Dual-red and medium intensity
Other :	
Recommended Marking/Lighting:	
Nearest City:	Greenville
Nearest State:	Kentucky
Description of Location:	
Description of Proposal:	Proposing a 250' self support tower with a 10' lightning arrestor.

Common Frequency Bands

Low Freq	High Freq	Freq Unit	ERP	E
806	824	MHz	500	
824	849	MHz	500	
851	866	MHz	500	
869	894	MHz	500	
896	901	MHz	500	
901	902	MHz	7	
930	931	MHz	3500	
931	932	MHz	3500	
932	932.5	MHz	17	d
935	940	MHz	1000	
940	941	MHz	3500	
1850	1910	MHz	1640	
1930	1990	MHz	1640	
2305	2310	MHz	2000	
2345	2360	MHz	2000	

Specific Frequencies

FStan
Land Surveyors and Consulting Engineers
Formerly F.S. Land & T. Alan Neal Companies

T-MOBILE

Date: October 29, 2008

T-Mobile
Attn: Hamlet Hope
11509 Commonwealth Drive
Louisville, Ky. 40299

Re:	FAA "2-C" Letter	
	T-Mobile/Louisville PCS Site Name:	Jarvis Road
	T-Mobile/Louisville PCS Site No.:	9LV0711A
	Property Owner:	William C. Hill
	T-Mobile /Louisville PCS Site Locale:	900 Malone Farm Lane
	FSTAN Project No:	08-5672

Dear Hamlet,

This is to advise you that we have conducted a Global Positioning System (GPS) Observation for this project in order to establish a geographical position and elevation for the proposed antenna at this location.

The base station used for the GPS observation is described as follows: Station designated "KY HWY DIST 2 CORS ARP" in Madisonville, KY.

Horizontal values are based upon the following datum: NAD 83
Vertical values are based upon the following datum: NGVD 29

Geographic Coordinates of the Self-Support Tower are as follows:

LATITUDE: 37° 13' 43.31" NORTH LONGITUDE: 87° 12' 44.75" WEST

Ground elevation at the site is 517 FEET (AMSL)
Height of proposed monopole is 250 FEET (AGL)
Height of proposed lightning arrestor is 260 FEET (AGL)
Overall height elevation is 777 FEET (AMSL)

The accuracy of the above stated "Self-Support Tower" values meet or exceed "2-C" accuracy as required by the Federal Aviation Administration (horizontal accuracy ± 50 feet, vertical accuracy ± 20 feet).

Kentucky State Plane Coordinates (South Zone) were established with Trimble Global Positioning Systems (GPS) receivers. This site has ties to the National Geodetic Reference System established by the National Geodetic Survey, formerly the U.S. Coast & Geodetic Survey by measurements to PID Station "DK3316".

If you have any questions concerning this information please contact us at any time.

Sincerely,

STATE OF KENTUCKY
FRANK L. SELLINGER
#3282
LICENSED PROFESSIONAL LAND SURVEYOR

CONSULTANT

Frank L. Sellinger, PLS No. 3282
FStan Land Surveyors and Consulting Engineers
2315 Crittenden Drive, Louisville, Ky. 40217
Phone: 502-635-5866 Fax: 502-636-5263

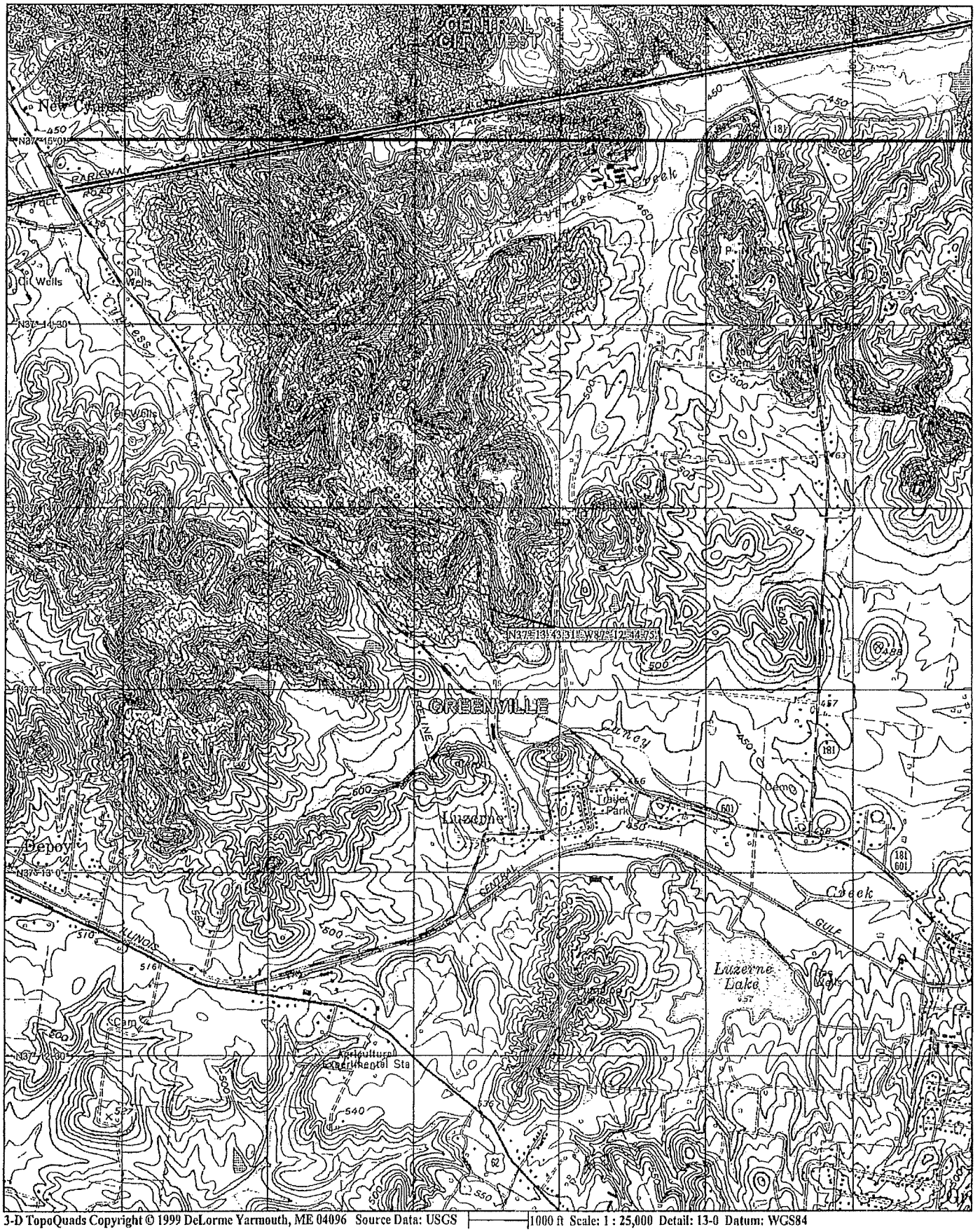

3-D TopoQuads Copyright © 1999 DeLorme Yarmouth, ME 04096 Source Data: USGS 1000 ft Scale: 1 : 25,000 Detail: 13-0 Datum: WGS84

Kentucky

TC 56-50E (Rev. 02/05)

Kentucky Transportation Cabinet, Kentucky Airport Zoning Commission, 200 Mero Street, Frankfort, KY 40622

APPLICATION FOR PERMIT TO CONSTRUCT OR ALTER A STRUCTURE

INSTRUCTIONS INCLUDED

Kentucky Aeronautical Study Number

1 APPLICANT -- Name, Address, Telephone, Fax, etc.
T-Mobile USA
ATTN: Ken Bischoff
11509 Commonwealth Dr, Suite 9
Louisvill, KY 40299

2. Representative of Applicant -- Name, Address, Telephone, Fax
T-Mobile USA
ATTN: Raffi Achiba
11509 Commonwealth Dr, Suite 9
Louisvill, KY 40299

3. Application for: ☒ New Construction ☐ Alteration ☐ Existing

4 Duration: ☒ Permanent ☐ Temporary (Months _____ Days _____)

5. Work Schedule: Start _____ End _____

6. Type: ☒ Antenna Tower ☐ Crane ☐ Building ☐ Power Line ☐ Landfill ☐ Water Tank ☐ Other _____

7. Marking/Painting and/or Lighting Preferred:
☐ Red Lights and Paint ☒ Dual - Red & Medium Intensity White
☐ White - Medium Intensity ☐ Dual - Red & High Intensity White
☐ White - High Intensity ☐ Other _____

8. FAA Aeronautical Study Number T-MOB-000106431-08

9. Latitude: 37 ° 13 ' 43 . 31 "

10. Longitude: 87 ° 12 ' 44 . 75 "

11. Datum: ☒ NAD83 ☐ NAD27 ☐ Other _____

12. Nearest Kentucky City: Greenville County Muhlenburg

13. Nearest Kentucky public use or Military airport:
Muhlenburg County Airport

14. Distance from #13 to Structure: 2.7 nm

15. Direction from #13 to Structure: 93.32

16. Site Elevation (AMSL): 517.00 Feet

17. Total Structure Height (AGL): 260.00 Feet

18. Overall Height (#16 + #17) (AMSL): 777.00 Feet

19. Previous FAA and/or Kentucky Aeronautical Study Number(s):

20 Description of Location: (Attach USGS 7.5 minute Quadrangle Map or an Airport layout Drawing with the precise site marked and any certified survey)
Site will be located at:
900 Malone Farm Lane,
Belton, KY 42324

21. Description of Proposal:

Erection of a self support tower.

22. Has a "NOTICE OF CONSTRUCTION OR ALTERATION" (FAA Form 7460-1) been filed with the Federal Aviation Administration?
☐ No ☒ Yes, When October 31, 2008

CERTIFICATION: I hereby certify that all the above statements made by me are true, complete and correct to the best of my knowledge and belief.

Raffi Achiba — Signature — 10/31/2008
Printed Name and Title — Signature — Date

PENALTIES: Persons failing to comply with Kentucky Revised Statutes (KRS 183.861 through 183.990) and Kentucky Administrative Regulations (602 KAR 050:Series) are liable for fines and/or imprisonment as set forth in KRS 183.990(3). Non-compliance with Federal Aviation Administration Regulations may result in further penalties.

Commission Action:

☐ Chairman, KAZC ☐ Administrator, KAZC

☐ Approved

☐ Disapproved _____ Date _____

GEOTECHNICAL ENGINEERING STUDY

PROPOSED COMMUNICATIONS TOWER
JARVIS ROAD SITE
BELTON, KENTUCKY
MUHLENBERG COUNTY

ASHER PROJECT NO. 008-221G

Prepared For:

Mr. Dean Davis
T-Mobile South, LLC
3800 Ezell Road, Suite 815
Nashville, TN 37211

Prepared By:

Asher, Inc.
1021 S. Floyd Street
Louisville, Kentucky 40203

November 14, 2008

ASHER, INC.
Environmental & Engineering Consulting

November 14, 2008

Mr. Dean Davis
T-Mobile South, LLC
3800 Ezell Road, Suite 815
Nashville, TN 37211

RE: Geotechnical Engineering Study
Proposed Communications Tower
Jarvis Road Site
Belton, Kentucky
Muhlenberg County

Dear Mr. Davis,

Asher, Inc. has completed a Geotechnical Engineering Study for the above referenced project. This report contains the findings of our subsurface exploration, geotechnical recommendations to aid design of foundations, and construction recommendations with regard to site work; fill placement, and foundation installation and inspection.

We appreciate the opportunity to be of service to you on this project. If we can be of further assistance, or if you have any questions regarding this report, please contact our office.

Sincerely,

Jacob D. Brown, E.I.T.
Staff Engineer

Richard A. Linker, P. E.
President

STATE OF KENTUCKY
RICHARD A. LINKER
16420
LICENSED
PROFESSIONAL ENGINEER

1021 South Floyd Street • Louisville, KY 40203 • Phone: (502) 589-0073 • Fax: (502) 589-0076

TABLE OF CONTENTS

LETTER OF TRANSMITTAL i

1.0 PROJECT INFORMATION 1

2.0 SUBSURFACE EXPLORATION 1

3.0 DESIGN RECOMMENDATIONS 2-6

3.1 Site Development and Foundations 2-5
3.2 Pavements 5-6

4.0 CONSTRUCTION RECOMMENDATIONS 6--7

4.1 Subgrade Preparation 6
4.2 Engineered Fill 7
4.3 Foundation Excavations 7
4.4 Construction Dewatering 7

5.0 QUALIFICATIONS 8

APPENDICES

Site Location Plan
Aerial Photograph
Geologic Map
Geologic Map Legend
Mine Report
Location of Test Borings
Test Boring Logs

1.0 PROJECT INFORMATION

The site is located on State Route 601 about 1/4-mile west of Nebo Cemetery Road in Greenville, Kentucky. The proposed lease area is located within an open field with brush and small trees. The new tower area slopes slightly downhill to the southwest. No ponding water was observed on the site. Based on old mine maps, the lease area is located within an old strip mine area abandoned in the 1950s.

Proposed for construction is a 250 ft. lattice tower and access road. The tower is expected to have either a mat foundation bearing on soil, or drilled piers bearing on bedrock. The equipment building/cabinets will be pre-fabricated structures supported on conventional shallow foundations.

2.0 SUBSURFACE EXPLORATION

The subsurface conditions were explored by conducting two borings within the proposed lease area. The boring locations are shown on the plan included in the Appendix. The boring logs (also included in the Appendix) describe the materials and conditions encountered at each location.

A 3 in. layer of topsoil was encountered our borings. Beneath the topsoil, the borings encountered mine spoil consisting of a mixture of clay soil, rock and coal fragments. The encountered mine spoil was noted to be firm to hard with Standard Penetration Test results (N Values) ranging from 5 to 50+ blows per ft. The mine spoil is underlain by gray and brown lean clay to auger refusal. Auger refusal was encountered at depths ranging from 16.6 to 17.3 ft. The project site is underlain by intermittent layers of sandstone, siltstone, shale, and limestone within the Carbondale Formation

3.0 DESIGN RECOMMENDATIONS

The following design recommendations have been developed on the basis of the previously described project characteristics and subsurface conditions. Please notify our office if the project description included herein is incorrect, or if the location of the proposed tower is changed. Asher Inc. would then review the new project description to determine if revisions to our recommendations are necessary.

3.1 Site Development and Foundations

Based on the subsurface conditions encountered, the existing soils are not suitable for the anticipated loading on shallow mat foundations without remediation. Mine spoil is generally irregular in composition with pockets of soft material adjacent to large rock boulders commonly present. Removal of the mine spoils and replacing with crushed stone will significantly lower the risk of differential settlement of the tower foundations.

Drilled piers bearing on sound continuous bedrock can be used if deemed to be more economical. However, drilling the piers through the mine spoil may result in significant rock removal costs if large boulders are encountered in the mine spoil.

SHALLOW FOUNDATIONS

If mat foundations are used, the footings can be proportioned using a net allowable bearing capacity of 3,000 psf with the base bearing at a depth of at least 5 ft. below existing grades. With mat foundations, removal of the mine spoil will be required. The mine spoil was encountered to depths ranging from 12 to 14 ft. below the existing ground surface. Due to the composition of mine spoil, a large excavator with at least a 3 ft. bucket (and possibly a ripper bucket) should be used for removal. The removed mine spoil can be replaced with KY No. 3 crushed limestone. The crushed stone should be compacted using the excavator bucket. A vibratory plate compactor can be used on the final lifts. Site Classification D can be used for seismic design. Based on the results of the field tests, it is estimated that the foundation settlements if mat foundations are used should not exceed about 1 in. Differential settlements should not exceed 3/4 in. Careful field control during construction will minimize the actual settlement that occurs.

3.1 Site Development and Foundations (cont.)

DRILLED PIERS

The drilled piers should be sized using a maximum allowable end-bearing pressure of 40 kips per square ft. (20 tons per sq. ft.) for piers bearing on the continuous sandstone bedrock. Site Classification C can be used for seismic design.

Soil Parameters that may be used in design are as follows:

	0-14 ft.
Coefficient of Passive Earth Pressure (Kp)	2.8
Unit Weight of Soil (pcf)	125
Lateral Subgrade Modulus (pci)	200
Cohesion (psf)	0
Angle of Internal Friction (deg.)	28

Our borings encountered about 12 to 14 ft. of mine spoil. A rock bit may be needed to drill through the mine spoil due to the presence of large boulders commonly encountered. The drilled shafts should be socketed into the sandstone bedrock at least 1 ft.

We recommend that an average of 8 ft. of rock removal per drilled pier location be estimated when conducting a cost analysis of drilled piers vs. shallow foundations. The 8 ft. is assuming that a rock bit will be needed on at least ½ of the mine spoil depth.

Total and differential settlements of the tower foundations bearing on competent bedrock, using the recommended bearing pressure would be less than ½ in.

The following construction considerations are recommended for drilled shaft construction:

- Provide a minimum drilled shaft diameter of 30 inches to reasonably enter the drilled shaft excavation for cleaning, bottom preparation, and observation.

- Specify concrete slumps ranging from 6 to 8 inches for the drilled shaft construction. These slumps are recommended to fill irregularities along the sides and bottom of the drilled shaft, displace water as it is placed, and permit placement of reinforcing cages into the fluid concrete.

3.1 Site Development and Foundations (cont.)

DRILLED PIERS (CONT.)

- Install a temporary protective steel casing to prevent side wall collapse, prevent excessive mud and water intrusion, and to allow workers to safely enter, clean and observe the drilled shaft.

- Observe the drilled shaft excavation after the bottom of the hole is leveled, cleaned of any mud or extraneous material, and de-watered.

- Clean the socket "face" prior to concrete placements. Cleaning will require hand cleaning or washing if a mud smear forms on the face of the rock. The geotechnical engineer should approve the rock socket surface prior to concrete placement.

- The protective steel casing may be extracted as the concrete is placed provided a sufficient head of concrete is maintained inside the steel casing to prevent soil or water intrusion into the newly placed concrete.

The protective steel casing may be extracted as the concrete is placed provided a sufficient head of concrete is maintained inside the steel casing to prevent soil or water intrusion into the newly placed concrete.

Direct the concrete placement into the drilled shaft through a centering chute to reduce side flow or segregation.

3.1 Site Development and Foundations (cont.)

Building Foundations

The proposed equipment cabinet(s) can be supported on conventional shallow foundations. Due to the expected light loads, the proposed equipment cabinets can be constructed on the mine spoil with minimal risk of settlement. The footings can be proportioned using a net allowable bearing capacity of 2,000 psf. Site Classification D can be used for seismic design. Wall footings must be at least 16 in. wide and column footings must be at least 24 in. wide to provide an adequate factor of safety for bearing capacity. All exterior footings and footings in unheated areas must bear at least 30 inches below final exterior grade for frost protection. Interior footings in heated areas can bear at nominal depths below the floor (at least 12 inches). Upon approval of the subgrade, it is recommended that the cabinet floor slab be supported on a 6-in. layer of KY Dense Graded Aggregate (DGA) crushed limestone compacted to 100 percent of the standard Proctor.

3.2 Pavements

All pavement subgrade surfaces should be uniformly sloped to facilitate drainage and to avoid ponding of water beneath the pavement. Assuming proper subgrade preparation and drainage, a California Bearing Ratio (CBR) value of 2 is recommended.
This value applies for the soil subgrade that is stable under a proofroll inspection, and for soil that is recompacted to 95 percent of the standard Proctor maximum dry density.

The following granular or asphalt pavement sections are recommended:

Light Truck Areas	4.0 in. KY DGA 6.0 in. KY No. 3 Crushed Limestone 6 oz. Nonwoven Filter Fabric
Light Truck Areas	2.0 in. asphalt concrete base 8.0 in. KY DGA

3.2 Pavements (cont.)

All paving material should comply with the current Kentucky Department of Highway Specifications. The DGA granular base should be compacted to at least 98 percent of the standard Proctor maximum dry density (ASTM D-698). It should not be expected that the pavement would be maintenance free. However, the required maintenance work should be within normal limits.

4.0 CONSTRUCTION RECOMMENDATIONS

Variations in subsurface conditions must be expected during construction. It is therefore recommended that the geotechnical engineer be retained to review the soils-related phases of the project and to correlate the subsurface data with the soil conditions that are encountered during construction.

4.1 Subgrade Preparation

Prior to construction or the placement of new engineered fill, the exposed subgrade should be evaluated by the project geotechnical engineer. The evaluation should include proofrolling of the exposed subgrade with a loaded dump truck. If unsuitable material were disclosed, the geotechnical engineer would recommend an appropriate remedial measure at that time. The silty clay soils encountered just beneath the pavement surface will be sensitive to moisture and heavy construction equipment, and may require aeration and re-compaction or undercutting to reach firm subgrade. The severity of this potential problem depends to a great extent on the weather conditions prevailing during construction.

The contractor should exercise discretion when selecting equipment sizes and also control surface water while the subgrade soils are exposed. It may be necessary to undercut and stabilize the proposed pavement areas with crushed stone, or use a geotextile fabric to improve the subgrade, especially if the sitework is done during wet weather conditions.

4.2 Engineered Fill

Engineered fill should be placed on a prepared subgrade that has been evaluated by the geotechnical engineer. Engineered fill should be compacted to at least 98 percent of the standard Proctor maximum dry density (ASTM D-698. Field density tests should be performed on each lift as necessary to insure that the specified compaction is being achieved. Fill should be placed in horizontal lifts and each lift should be compacted to the specified density. Lift thickness of 8 in. and 12 in. should be used for clayey soils and granular soils, respectively. The on site soils are suitable for use as engineered fill.

4.3 Foundation Excavations

All concrete for foundations should be poured the same day the excavation is made. If this is not practical, the foundation excavation should be adequately protected. Soils exposed in the base of all excavations must be protected against rain and freezing. Surface water should be drained away from all excavations and not allowed to pond.

4.4 Construction Dewatering

At the time of our field investigation, no groundwater was encountered in the depths explored by our borings. Therefore, the water level appeared to be below the expected maximum excavation depth at the site for the expected foundations. However, due to seasonal variations in rainfall, local groundwater levels could rise to above the bottom of the excavation. Recommendations for construction dewatering can be made during construction if needed.

5.0 QUALIFICATIONS

Our professional services have been performed, our findings obtained, and our recommendations prepared in accordance with generally accepted geotechnical engineering principles and practices. This warranty is in lieu of all other warranties, either express or implied. Asher, Inc. is not responsible for the independent conclusion, opinions or recommendations made by others based on the field exploration and laboratory test data presented in this report.

The nature and extent of variation and change in the subsurface conditions at the site may not become evident until the course of construction. Construction monitoring by the geotechnical engineer or his representative is therefore considered necessary to verify the subsurface conditions and to check that the soil connected construction phases are properly carried out. If significant variations or changes are in evidence, it may then be necessary to reevaluate the recommendations of this report.

Furthermore, if the project characteristics are altered significantly from those discussed in this report, if the project information contained in this report is incorrect, or if additional information becomes available, a review must be made to determine if any modification in the recommendations will be required.

APPENDIX

Site Location Plan
Aerial Photograph
Geologic Map
Geologic Map Legend
Mine Report
Location of Test Borings
Test Boring Logs

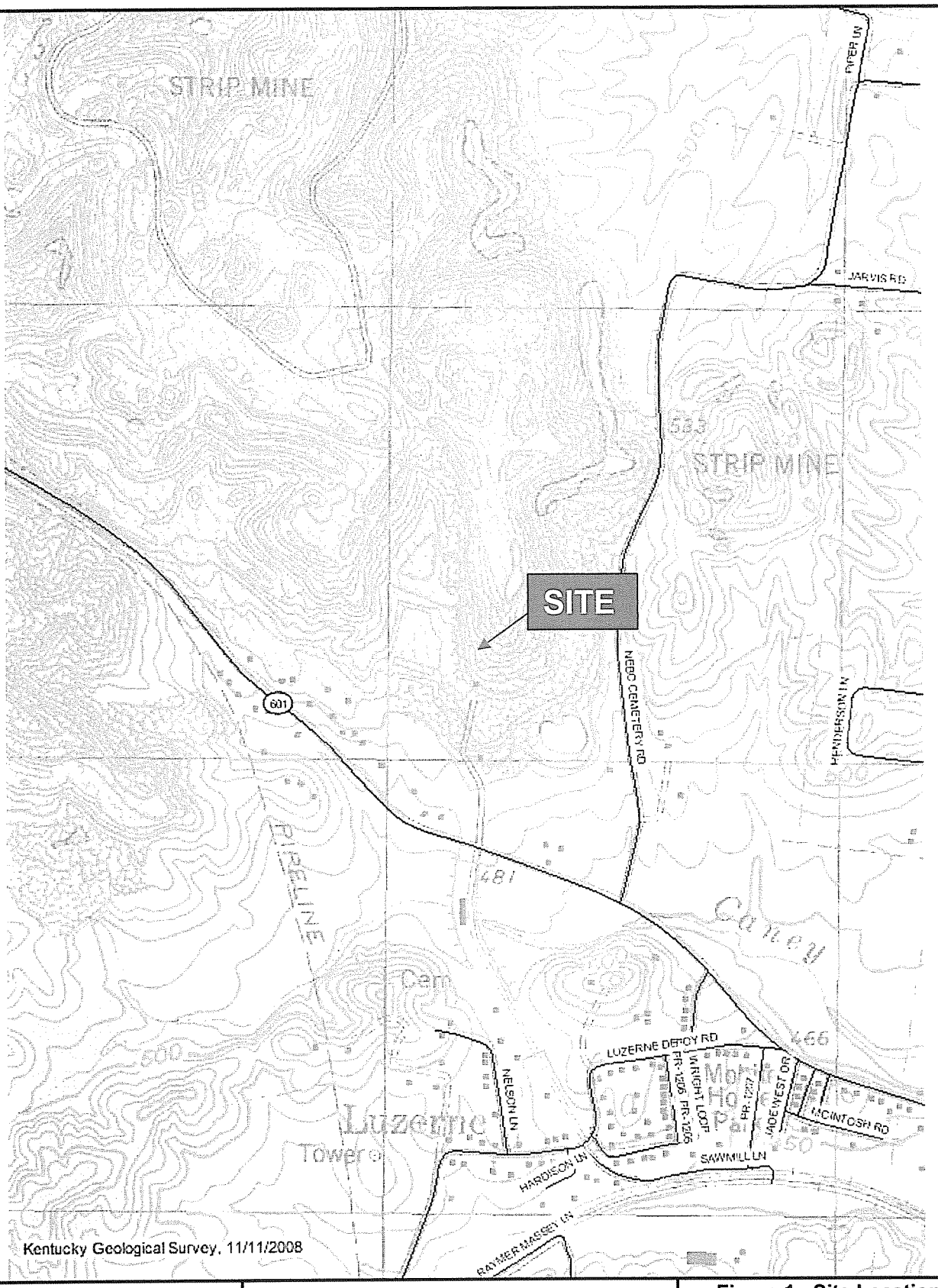

ECA	ASHER, INC.	**Figure 1 - Site Location Plan** Jarvis Road Tower Site Greenville, Kentucky Muhlenberg County Asher Project Number: 008-221G

ECA	ASHER, INC.	**Figure 2 – Aerial Photo** Jarvis Road Tower Site Greenville, Kentucky Muhlenberg County Asher Project Number: 008-221G

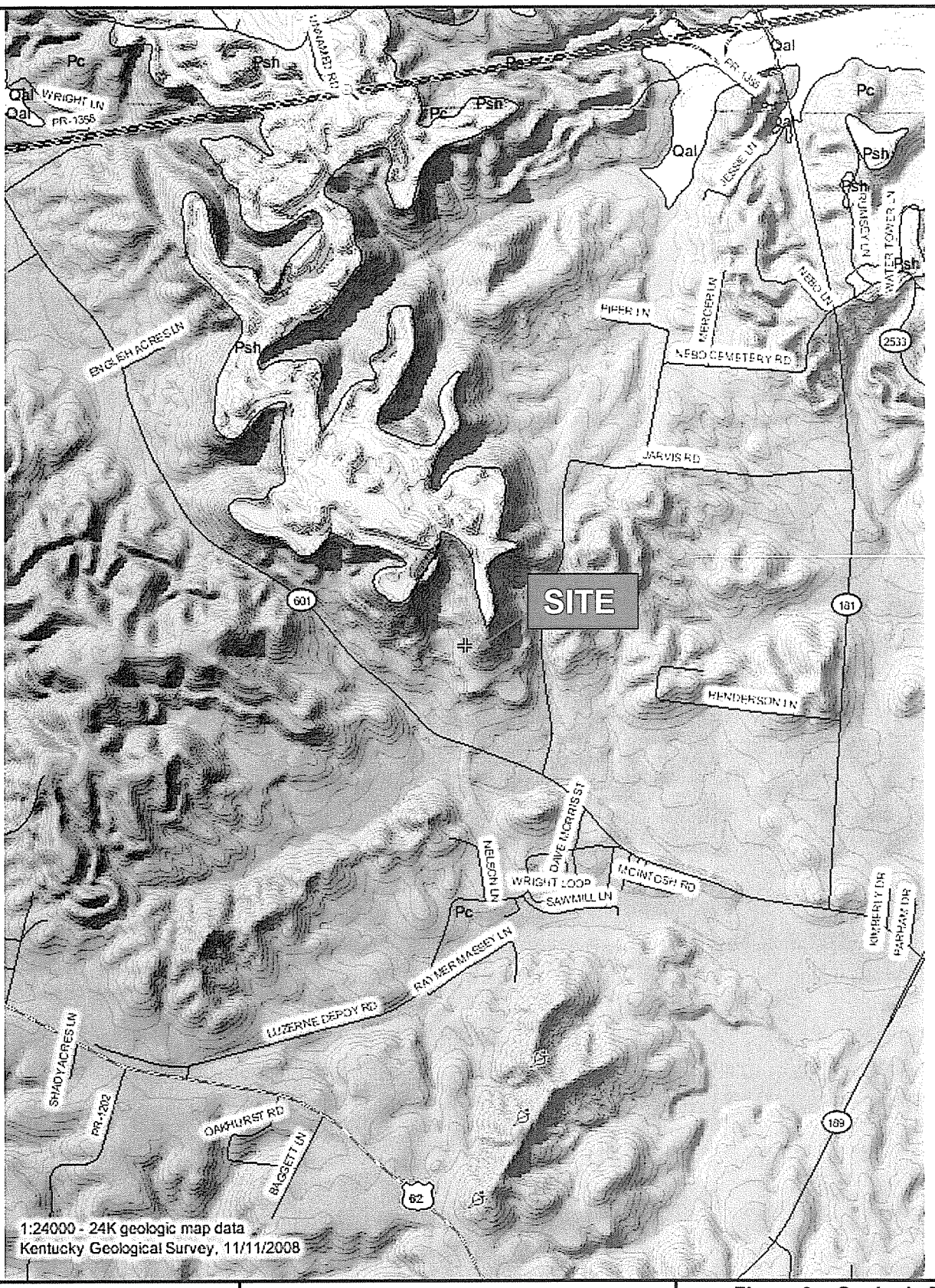

ECA	ASHER, INC.	**Figure 3 – Geologic Map** Jarvis Road Tower Site Greenville, Kentucky Muhlenberg County Asher Project Number: 008-221G

Kentucky Geological Survey
Geologic Information Service
Map Legend

Geologic Units In Current View:

1:24,000 scale data (detailed geology)

Qal	**Alluvium** (Quaternary - Quaternary)
Psh	**Shelburn Formation** (Lower Pennsylvanian - Middle Pennsylvanian)
Pc	**Carbondale Formation** (Lower Pennsylvanian - Middle Pennsylvanian)

Symbols:

- contacts / structural features:

- geologic contact
- contact - concealed
- contact - secondary
- contact - projected
- fault
- fault - concealed
- fault - secondary
- fault - projected

---

fossil location

PRINT THIS PAGE

NOTE: in order to print colors, make sure your browser is *enabled to print background colors.*
Internet Explorer Instructions: Go to Tools --> Internet Options --> Advanced --> Under the "Printing" header, click the "Print background colors and images" box.
Firefox Instructions: Go to File --> Page Setup --> Click the "Print Background (colors & images)" box.

Mine Report For State File Number 00158-2

State File Number: 00158-2
Mine Status: Abandoned
Federal ID Number(s):
Last Company Name: DUNCAN, W G C C
Seam(s): NO. 11, NO. 9
Mine Type:
County:
Nearest Town:
Stream:
Branch:

Historic Mine Information:

License Number	Report Year	Permit Number	Company Name	Mine Name	Operator
	1957		DUNCAN, W G C C	LUZERNE	
	1957		DUNCAN, W G C C	LUZERNE	
	1956		DUNCAN, W G C C	LUZERNE	
	1955		DUNCAN, W G C C	LUZERNE	
	1953		DUNCAN, W G C C	LUZERNE	
	1952		DUNCAN, W G C C	LUZERNE	
	1947		LUZERNE GRAHAM M C	LUZERNE-BACK DOOR #11	

License Number	Date Map Posted	Report Year	Tonnage	Seam Name	Seam Height	Lat	Long
	10/08/1957	1957		NO. 11	060	37° 15' 49"	87° 13' 30"
	10/08/1957	1957		NO. 9	060	37° 15' 49"	87° 13' 30"
	12/31/1956	1956		NO. 11	060	37° 15' 49"	87° 13' 30"
	01/01/1956	1955		NO. 11	060	37° 15' 49"	87° 13' 30"
	12/31/1953	1953		NO. 11	060	37° 15' 49"	87° 13' 30"
	12/31/1952	1952		NO. 11	060	37° 15' 49"	87° 13' 30"
	10/28/1947	1947	591,829	NO. 11	060	37° 15' 49"	87° 13' 30"

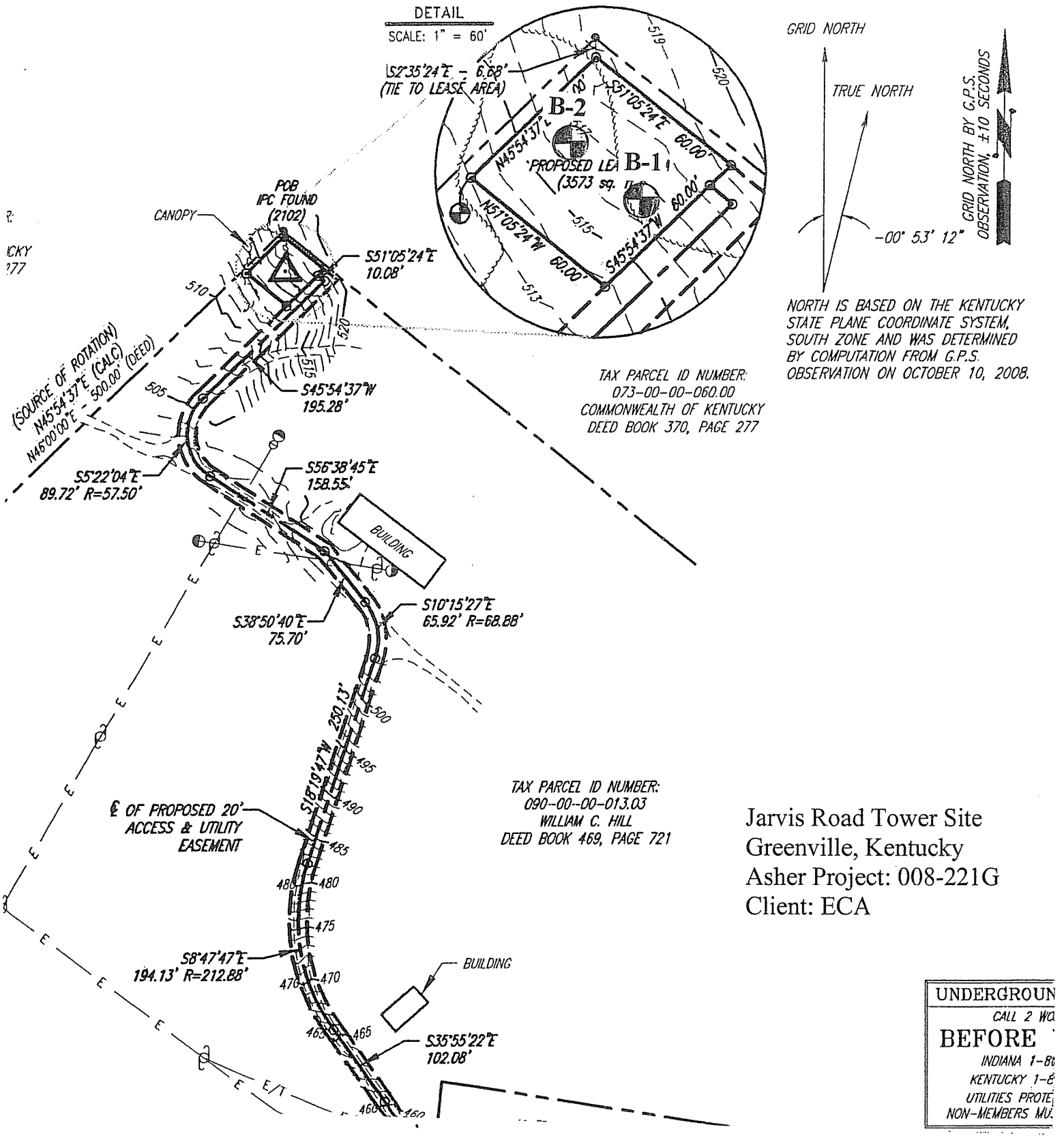

Jarvis Road Tower Site
Greenville, Kentucky
Asher Project: 008-221G
Client: ECA

BORING LOCATION PLAN (FIGURE 4)

BORING LOG

ASHER, INC.
P.O. Box 17534
Louisville, KY 402017
(502) 589-0073

Boring No.: B-1

ELEV.: 516.5
Project: Jarvis Road Tower Site
Asher Project No.: 008-221G
Location: Greenville, KY
Client: ECA
Date: November 10, 2008

Elev (feet)	Depth (feet)	Sample Number	SPT Blows / 6"	N	Percent Moisture	Description of Material
		1	3-6-8	14		FILL- LEAN CLAY (CL), silty, w/ rock fragments, sandy, STIFF to HARD, orangish brown and gray, moist
		2	14-22-50/.4	50+	8.3	
	5	3	13-13-15	28	8.8	
		4	8-7-8	15	11.9	
	10	5	7-13-20	33	14.9	FILL- LEAN CLAY (CL), w/ coal fragments, w/ rock fragments, HARD, gray, tan, and orangish brown, moist
	15	6	50/.4	50+	15.9	LEAN CLAY (CL), silty, HARD, orangish brown and gray, moist
499.9						**AUGER REFUSAL AT 16.6 FT.**
	20					
	25					

Notes: No groundwater was encountered during drilling.
Topsoil - 3 in.
Elevations were interpolated from the supplied Topographic Survey performed by FS Tan.

BORING LOG

ASHER, INC.
P.O. Box 17534
Louisville, KY 402017
(502) 589-0073

Boring No.: B-2

ELEV.: 516.0
Project: Jarvis Road Tower Site
Asher Project No.: 008-221G
Location: Greenville, KY
Client: ECA
Date: November 10, 2008

Elev (feet)	Depth (feet)	Sample Number	SPT Blows / 6"	N	Percent Moisture	Description of Material
		1	3-4-7	11		FILL- LEAN CLAY (CL), silty, w/ rock and coal fragments, sandy, STIFF to FIRM, orangish brown and gray, moist
		2	6-14-13	27	15.7	
	5	3	5-5-5	10	15.3	
		4	3-3-2	5	17.3	
						Abundant coal and rock fragments, wet zone
	10	5	4-50/.3	50+	20.1	
						LEAN CLAY (CL), silty, VERY STIFF, orangish brown and gray, dry
	15	4	50/.4	50+	14.2	Weathered Rock - SANDSTONE
498.7						**AUGER REFUSAL AT 17.3 FT.**
	20					
	25					

Notes: No groundwater was encountered during drilling.
Topsoil - 8 in.
Elevations were interpolated from the supplied Topographic Survey performed by FS Tan.

MAPQUEST

T-Mobile/"Jarvis"/Case No. 2009-00021
Direction from County Seat/County Judge Executive Office
131 E. Main Cross Street, Greenville, Kentucky to
Cell Tower Site at 2020 State Rt. 601, Greenville, KY

Directions printed by:
Theresa A. Tharp, Paralegal
Greenebaum Doll & McDonald, PLLC
3500 National City Tower
Louisville, Kentucky 40202 (502) 587-3748

Total Time: 6 minutes **Total Distance: 3.08 miles**

A: 131 E Main Cross St, Greenville, KY 42345-1577

START	1: Start out going WEST on E MAIN ST/KY-176/E MAIN CROSS ST toward COURT ST.	0.1 mi
	2: Turn RIGHT onto US-62/N MAIN ST/KY-181.	0.8 mi
	3: Turn LEFT onto KY-181/KY-601/W DEPOT ST. Continue to follow KY-601.	2.2 mi
END	4: End at 2020 State Route 601 Greenville, KY 42345-4388	

B: 2020 State Route 601, Greenville, KY 42345-4388

Total Time: 6 minutes **Total Distance: 3.08 miles**

Speak your request and go! Free MapQuest directions by phone: **1-800-FREE411** (1-800-373-3411).

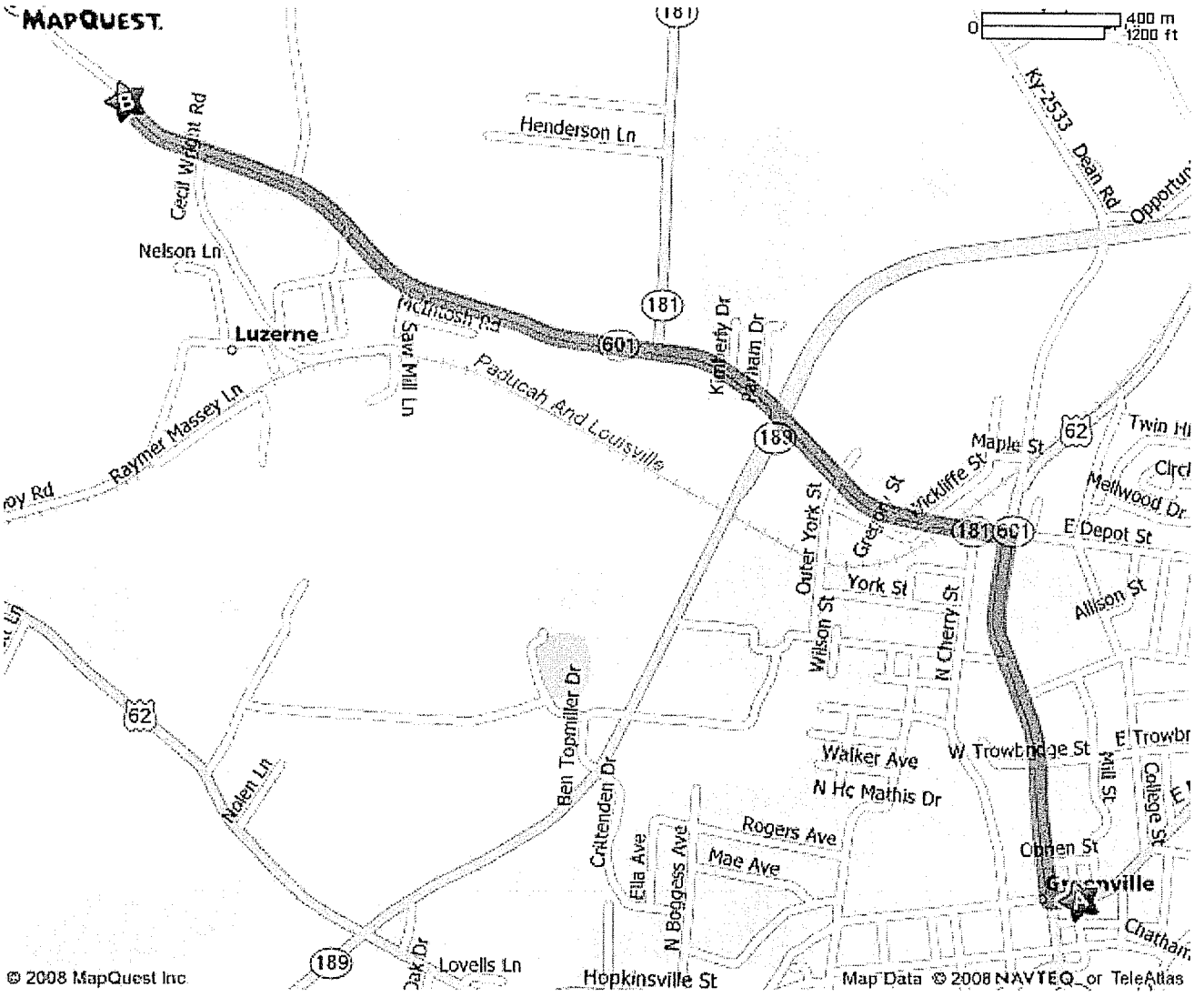

All rights reserved. Use subject to License/Copyright Map Legend
Directions and maps are informational only. We make no warranties on the accuracy of their content, road conditions or route usability or expeditiousness. You assume all risk of use. MapQuest and its suppliers shall not be liable to you for any loss or delay resulting from your use of MapQuest. Your use of MapQuest means you agree to our Terms of Use

Muhlenberg #2
Jarvis

SITE LEASE WITH OPTION

THIS SITE LEASE WITH OPTION (this "Lease") is by and between William C. Hill, an individual ("Landlord") and Powertel Memphis, Inc., a Delaware corporation ("Tenant")

1. Option to Lease

(a) In consideration of the payment of (the "Option Fee") by Tenant to Landlord, Landlord hereby grants to Tenant an option to lease a portion of the real property described in the attached Exhibit A (the "Property"), on the terms and conditions set forth herein (the "Option"). The Option shall be for an initial term of twelve (12) months, commencing on the Effective Date (as defined below) (the "Option Period"). The Option Period may be extended by Tenant for an additional twelve (12) months upon written notice to Landlord and payment of the sum of ("Additional Option Fee") at any time prior to the end of the Option Period.

(b) During the Option Period and any extension thereof, and during the Initial Term and any Renewal Term (as those terms are defined below) of this Lease, Landlord agrees to cooperate with Tenant in obtaining, at Tenant's expense, all licenses and permits or authorizations required for Tenant's use of the Premises (as defined below) from all applicable government and/or regulatory entities (including, without limitation, zoning and land use authorities, and the Federal Communications Commission ("FCC") ("Governmental Approvals"), including all land use and zoning permit applications, and Landlord agrees to cooperate with and to allow Tenant, at no cost to Landlord, to obtain a title report, zoning approvals and variances, land-use permits. Landlord expressly grants to Tenant a right of access to the Property to perform any surveys, soil tests, and other engineering procedures or environmental investigations ("Tests") on the Property deemed necessary or appropriate by Tenant to evaluate the suitability of the Property for the uses contemplated under this Lease. During the Option Period and any extension thereof, and during the Initial Term or any Renewal Term of this Lease, Landlord agrees that it will not interfere with Tenant's efforts to secure other licenses and permits or authorizations that relate to other property. During the Option Period and any extension thereof, Tenant may exercise the Option by so notifying Landlord in writing, at Landlord's address in accordance with Section 12 hereof.

(c) If Tenant exercises the Option, then Landlord hereby leases to Tenant that portion of the Property sufficient for placement of the Antenna Facilities (as defined below), together with all necessary space and easements for access and utilities, as generally described and depicted in the attached Exhibit B (collectively referred to hereinafter as the "Premises"). The Premises, located at 2020 Hwy 601, Greenville, Muhlenberg County, KY 42345, comprises approximately 3,600 square feet.

2. Term. The initial term of this Lease shall be five (5) years commencing on the date of exercise of the Option (the "Commencement Date"), and terminating at midnight on the last day of the initial term (the "Initial Term").

3. Renewal. Tenant shall have the right to extend this Lease for five (5) additional and successive five-year terms (each a "Renewal Term") on the same terms and conditions as set forth herein. This Lease shall automatically renew for each successive Renewal Term unless Tenant notifies Landlord, in writing, of Tenant's intention not to renew this Lease, at least thirty (30) days prior to the expiration of the Initial Term or any Renewal Term. If Tenant shall remain in possession of the Premises at the expiration of this Lease or any Renewal Term without a written agreement, such tenancy shall be deemed a month-to-month tenancy under the same terms and conditions of this Lease.

4. Rent.

~~(a) From and after the Commencement Date, Tenant shall pay Landlord or designee, as rent, , per month ("Rent"). The first payment of Rent shall be due within twenty (20) days following the Commencement Date and shall be prorated based on the days remaining in the month following the Commencement Date, and thereafter Rent will be payable monthly in advance by the fifth day of each month to Landlord at the address specified in Section 12 below. If this Lease is terminated for any reason (other than a default by Tenant) at a time other than on the last day of a month, Rent shall be prorated as of the date of termination and all prepaid Rent shall be immediately refunded to Tenant. Landlord, its successors, assigns and/or designee, if any, will submit to Tenant any documents required by Tenant in connection with the payment of Rent, including, without limitation, an IRS Form W-9.~~

~~(b) During the Initial Term and any Renewal Terms, monthly Rent shall be adjusted, effective on the first day of each year of the Initial or Renewal Term, and on each such subsequent anniversary thereof, to an amount equal to one hundred three percent (103%) of the monthly Rent in effect immediately prior to the adjustment date.~~

5. Permitted Use. The Premises may be used by Tenant for the transmission and reception of radio communication signals and for the construction, installation, operation, maintenance, repair, removal or replacement of related facilities, including, without limitation, tower and base, antennas, microwave dishes, equipment shelters and/or cabinets and related activities.

6. Interference. Tenant shall not use the Premises in any way which interferes with the use of the Property by Landlord or lessees or licensees of Landlord with rights in the Property prior in time to Tenant's (subject to Tenant's rights under this Lease, including, without limitation, non-interference). Similarly, Landlord shall not use, nor shall Landlord permit its lessees, licensees, employees, invitees or agents to use, any portion of the Property in any way which interferes with the operations of Tenant. Such interference shall be deemed a material breach by the interfering party, who shall, upon written notice from the other, be responsible for terminating said interference. In the event any such interference does not cease promptly, the parties acknowledge that continuing interference may cause irreparable injury and, therefore, the injured party shall have the

right, in addition to any other rights that it may have at law or in equity, to bring a court action to enjoin such interference or to terminate this Lease immediately upon written notice.

7. Improvements; Utilities; Access.

(a) Tenant shall have the right, at its expense, to erect and maintain on the Premises improvements, personal property and facilities necessary to operate its communications system, including, without limitation, radio transmitting and receiving antennas, microwave dishes, tower and base, equipment shelters and/or cabinets and related cables and utility lines and a location based system, as such location based system may be required by any county, state or federal agency/department, including, without limitation, additional antenna(s), coaxial cable, base units and other associated equipment (collectively, the "Antenna Facilities"). Tenant shall have the right to alter, replace, expand, enhance and upgrade the Antenna Facilities at any time during the term of this Lease. Tenant shall cause all construction to occur lien-free and in compliance with all applicable laws and ordinances. Landlord acknowledges that it shall neither interfere with any aspects of construction nor attempt to direct construction personnel as to the location of or method of installation of the Antenna Facilities and the Easements (as defined below). The Antenna Facilities shall remain the exclusive property of Tenant and shall not be considered fixtures. Tenant shall have the right to remove the Antenna Facilities at any time during and upon the expiration or termination of this Lease.

(b) Tenant, at its expense, may use any and all appropriate means of restricting access to the Antenna Facilities, including, without limitation, the construction of a fence.

(c) Tenant shall, at Tenant's expense, keep and maintain the Antenna Facilities now or hereafter located on the Property in commercially reasonable condition and repair during the term of this Lease, normal wear and tear and casualty excepted. Upon termination or expiration of this Lease, the Premises shall be returned to Landlord in good, usable condition, normal wear and tear and casualty excepted.

(d) Tenant shall have the right to install utilities, at Tenant's expense, and to improve the present utilities on the Property (including, but not limited to, the installation of emergency power generators). Landlord agrees to use reasonable efforts in assisting Tenant to acquire necessary utility service. Tenant shall, wherever practicable, install separate meters for utilities used on the Property by Tenant. In the event separate meters are not installed, Tenant shall pay the periodic charges for all utilities attributable to Tenant's use, at the rate charged by the servicing utility. Landlord shall diligently correct any variation, interruption or failure of utility service.

(e) As partial consideration for Rent paid under this Lease, Landlord hereby grants Tenant easements on, under and across the Property for ingress, egress, utilities and access (including access for the purposes described in Section 1) to the Premises adequate to install and maintain utilities, including, but not limited to, the installation of power and telephone service cable, and to service the Premises and the Antenna Facilities at all times during the Initial Term of this Lease and any Renewal Term (collectively, the "Easements"). The Easements provided hereunder shall have the same term as this Lease.

(f) Tenant shall have 24-hours-a-day, 7-days-a-week access to the Premises at all times during the Initial Term of this Lease and any Renewal Term, at no charge to Tenant.

(g) Landlord shall maintain and repair all access roadways from the nearest public roadway to the Premises in a manner sufficient to allow vehicular and pedestrian access at all times, at its sole expense, except for any damage to such roadways caused by Tenant.

8. Termination. Except as otherwise provided herein, this Lease may be terminated, without any penalty or further liability as follows:

(a) upon thirty (30) days' written notice by Landlord if Tenant fails to cure a default for payment of amounts due under this Lease within such thirty (30) day period.

(b) immediately upon written notice by Tenant if Tenant notifies Landlord of any unacceptable results of any Tests prior to Tenant's installation of the Antenna Facilities on the Premises, or if Tenant does not obtain, maintain, or otherwise forfeits or cancels any license (including, without limitation, an FCC license), permit or any Governmental Approval necessary to the installation and/or operation of the Antenna Facilities or Tenant's business;

(c) upon thirty (30) days' written notice by Tenant if Tenant determines that the Property or the Antenna Facilities are inappropriate or unnecessary for Tenant's operations for economic or technological reasons;

(d) immediately upon written notice by Tenant if the Premises or the Antenna Facilities are destroyed or damaged so as in Tenant's reasonable judgment to substantially and adversely affect the effective use of the Antenna Facilities. In such event, all rights and obligations of the parties shall cease as of the date of the damage or destruction, and Tenant shall be entitled to the reimbursement of any Rent prepaid by Tenant. If Tenant elects to continue this Lease, then all Rent shall abate until the Premises and/or the Antenna Facilities are restored to the condition existing immediately prior to such damage or destruction; or

(e) at the time title to the Property transfers to a condemning authority pursuant to a taking of all or a portion of the Property sufficient in Tenant's determination to render the Premises unsuitable for Tenant's use. Landlord and Tenant shall each be entitled to pursue their own separate awards with respect to such taking. Sale of all or part of the Property to a purchaser with the power of eminent domain in the face of the exercise of the power shall be treated as a taking by condemnation.

9. Default and Right to Cure. Notwithstanding anything contained herein to the contrary and without waiving any other rights granted to it at law or in equity, each party shall have the right, but not the obligation, to terminate this Lease on written notice pursuant to Section 12 hereof, to take effect immediately, if the other party fails to perform any covenant or commits a material breach of this Lease and fails to diligently pursue a cure thereof to its completion after thirty (30) days' written notice specifying such failure of performance or default.

10. Taxes. Landlord shall pay when due all real property taxes for the Property, including the Premises. In the event that Landlord fails to pay any such real property taxes or other fees and assessments, Tenant shall have the right, but not the obligation, to pay such owed amounts and deduct them from Rent amounts due under this Lease. Notwithstanding the foregoing, Tenant shall pay any personal property tax, real property tax or any other tax or fee which is directly attributable to the presence or installation of Tenant's Antenna Facilities, only for so long as this Lease remains in effect. If Landlord receives notice of any personal property or real property tax assessment against Landlord which may affect Tenant and is directly attributable to Tenant's installation, Landlord shall provide timely notice of the assessment to Tenant sufficient to allow Tenant to consent to or challenge such assessment, whether in a Court, administrative proceeding, or other venue, on behalf of Landlord and/or Tenant. Further, Landlord shall provide to Tenant any and all documentation associated with the assessment and shall execute any and all documents reasonably necessary to effectuate the intent of this Section 10. In the event real property taxes are assessed against Landlord or Tenant for the Premises or the Property, Tenant shall have the right, but not the obligation, to terminate this Lease without further liability after thirty (30) days' written notice to Landlord, provided Tenant pays any real property taxes assessed as provided herein.

11. Insurance and Subrogation and Indemnification.

(a) Tenant will maintain Commercial General Liability Insurance in amounts of One Million and no/100 Dollars ($1,000,000.00) per occurrence and Two Million and no/100 Dollars ($2,000,000.00) aggregate. Tenant may satisfy this requirement by obtaining the appropriate endorsement to any master policy of liability insurance Tenant may maintain.

(b) Landlord and Tenant hereby mutually release each other (and their successors or assigns) from liability and waive all right of recovery against the other for any loss or damage covered by their respective first party property insurance policies for all perils insured thereunder. In the event of such insured loss, neither party's insurance company shall have a subrogated claim against the other.

(c) Subject to the property insurance waivers set forth in subsection 11(b), Landlord and Tenant each agree to indemnify and hold harmless the other party from and against any and all claims, damages, costs and expenses, including reasonable attorney fees, to the extent caused by or arising out of the negligent acts or omissions or willful misconduct in the operations or activities on the Property by the indemnifying party or the employees, agents, contractors, licensees, tenants and/or subtenants of the indemnifying party, or a breach of any obligation of the indemnifying party under this Lease. The indemnifying party's obligations under this section are contingent upon its receiving prompt written notice of any event giving rise to an obligation to indemnify the other party and the indemnified party's granting it the right to control the defense and settlement of the same.

(d) Notwithstanding anything to the contrary in this Lease, the parties hereby confirm that the provisions of this Section 11 shall survive the expiration or termination of this Lease.

(e) Tenant shall not be responsible to Landlord, or any third-party, for any claims, costs or damages (including, fines and penalties) attributable to any pre-existing violations of applicable codes, statutes or other regulations governing the Property.

12. Notices. All notices, requests, demands and other communications shall be in writing and are effective three (3) days after deposit in the U.S. mail, certified and postage paid, or upon receipt if personally delivered or sent by next-business-day delivery via a nationally recognized overnight courier to the addresses set forth below. Landlord or Tenant may from time to time designate any other address for this purpose by providing written notice to the other party.

If to Tenant, to:
T-Mobile USA, Inc.
12920 SE 38th Street
Bellevue, WA 98006
Attn: PCS Lease Administrator

With a copy to:
Attn: Legal Dept.
12920 SE 38th Street
Bellevue, WA 98006

And with a copy to:
Matt Chastain
Attn: Lease Administration Manager
3800 Lyell
Nashville, TN 37211

If to Landlord, to:
William C. Hill
900 Malone Farm Lane
Belton, KY 42324

And with a copy to:

Send Rent payments to:
William C. Hill
900 Malone Farm Lane
Belton, KY 42324

13. Quiet Enjoyment, Title and Authority. As of the Effective Date and at all times during the Initial Term and any Renewal Terms of this Lease, Landlord covenants and warrants to Tenant that (i) Landlord has full right, power and authority to execute and perform this Lease; (ii) Landlord has good and unencumbered fee title to the Property free and clear of any liens or mortgages, except those heretofore disclosed in writing to Tenant and which will not interfere with Tenant's rights to or use of the Premises; (iii) execution and performance of this Lease will not violate any laws, ordinances, covenants, or the provisions of any mortgage, lease, or other agreement binding on Landlord; and (iv) Tenant's quiet enjoyment of the Premises or any part thereof shall not be disturbed as long as Tenant is not in default beyond any applicable grace or cure period.

14. Environmental Laws. Landlord represents that it has no knowledge of any substance, chemical or waste (collectively, "Hazardous Substance") on the Property that is identified as hazardous, toxic or dangerous in any applicable federal, state or local law or regulation. Landlord and Tenant shall not introduce or use any Hazardous Substance on the Property in violation of any applicable law. Landlord shall be responsible for, and shall promptly conduct any investigation and remediation as required by any applicable environmental laws, all spills or other releases of any Hazardous Substance not caused solely by Tenant, that have occurred or which may occur on the Property. Each party agrees to defend, indemnify and hold harmless the other from and against any and all administrative and judicial actions and rulings, claims, causes of action, demands and liability (collectively, "Claims") including, but not limited to, damages, costs, expenses, assessments, penalties, fines, losses, judgments and reasonable attorney fees that the indemnitee may suffer or incur due to the existence of any Hazardous Substances on the Property or the migration of any Hazardous Substance to other properties or the release of any Hazardous Substance into the environment (collectively, "Actions"), that relate to or arise from the indemnitor's activities on the Property. Landlord agrees to defend, indemnify and hold Tenant harmless from Claims resulting from Actions on the Property not caused by Landlord or Tenant prior to and during the Initial Term and any Renewal Term. The indemnifications in this section specifically include, without limitation, costs incurred in connection with any investigation of site conditions or any cleanup, remedial, removal or restoration work required by any governmental authority. This Section 14 shall survive the termination or expiration of this Lease.

15. Assignment and Subleasing. Tenant shall have the right to assign or otherwise transfer this Lease and the Easements (as defined above) granted herein upon written notice to Landlord. Upon such assignment, Tenant shall be relieved of all liabilities and obligations hereunder and Landlord shall look solely to the assignee for performance under this Lease and all obligations hereunder. Tenant may sublease the Premises upon written notice to Landlord.

Landlord shall have the right to assign or otherwise transfer this Lease and the Easements granted herein, upon written notice to Tenant except for the following: any assignment or transfer of this Lease which is separate and distinct from a transfer of Landlord's entire right, title and interest in the Property, shall require the prior written consent of Tenant which may be withheld in Tenant's sole discretion. Upon Tenant's receipt of (i) an executed deed or assignment and (ii) an IRS Form W-9 from assignee, and subject to Tenant's consent, if required, Landlord shall be *relieved of all liabilities and obligations hereunder and Tenant shall look solely to the assignee for performance under this Lease and all obligations* hereunder.

Additionally, notwithstanding anything to the contrary above, Landlord or Tenant may, upon notice to the other, grant a security interest in this Lease (and as regards the Tenant, in the Antenna Facilities), and may collaterally assign this Lease (and as regards the Tenant, in the Antenna Facilities) to any mortgagees or holders of security interests, including their successors or assigns (collectively "Secured Parties"). In such event, Landlord or Tenant, as the case may be, shall execute such consent to leasehold financing as may reasonably be required by Secured Parties.

16. Successors and Assigns. *This Lease and the Easements granted herein shall run with the land, and shall be binding upon and inure to* the benefit of the parties, their respective successors, personal representatives and assigns.

17. Waiver of Landlord's Lien. Landlord hereby waives any and all lien rights it may have, statutory or otherwise, concerning the Antenna Facilities or any portion thereof, which shall be deemed personal property for the purposes of this Lease, whether or not the same is deemed real or personal property under applicable laws, and Landlord gives Tenant and Secured Parties the right to remove all or any portion of the same from time to time, whether before or after a default under this Lease, in Tenant's and/or Secured Party's sole discretion and without Landlord's consent.

18. Miscellaneous.

(a) The prevailing party in any litigation arising hereunder shall be entitled to reimbursement from the other party of its reasonable attorneys' fees and court costs, including appeals, if any.

(b) This Lease constitutes the entire agreement and understanding of the parties, and supersedes all offers, negotiations and other agreements with respect to the subject matter and property covered by this Lease. Any amendments to this Lease must be in writing and executed by both parties.

(c) Landlord agrees to cooperate with Tenant in executing any documents necessary to protect Tenant's rights in or use of the Premises. A Memorandum of Lease in substantially the form attached hereto as Exhibit C may be recorded in place of this Lease by Tenant.

(d) In the event the Property is encumbered by a mortgage or deed of trust, Landlord agrees, upon request of Tenant, to obtain and furnish to Tenant a non-disturbance and attornment agreement for each such mortgage or deed of trust, in a form reasonably acceptable to Tenant.

(e) Tenant may obtain title insurance on its interest in the Premises. Landlord agrees to execute such documents as the title company may require in connection therewith.

(f) This Lease shall be construed in accordance with the laws of the state in which the Property is located, without regard to the conflicts of law principles of such state.

(g) If any term of this Lease is found to be void or invalid, the remaining terms of this Lease shall continue in full force and effect. Any questions of particular interpretation shall not be interpreted against the drafter, but rather in accordance with the fair meaning thereof. No provision of this Lease will be deemed waived by either party unless expressly waived in writing by the waiving party. No waiver shall be implied by delay or any other act or omission of either party. No waiver by either party of any provision of this Lease shall be deemed a waiver of such provision with respect to any subsequent matter relating to such provision.

(h) The persons who have executed this Lease represent and warrant that they are duly authorized to execute this Lease in their individual or representative capacities as indicated.

(i) This Lease may be executed in any number of counterparts, each of which shall be deemed an original, but all of which together shall constitute a single instrument.

(j) All Exhibits referred to herein and any Addenda are incorporated herein for all purposes. The parties understand and acknowledge that Exhibits A and B may be attached to this Lease and the Memorandum of Lease, in preliminary form. Accordingly, the parties agree that upon the preparation of final, more complete exhibits, Exhibits A and/or B, as the case may be, may be replaced by Tenant with such final, more complete exhibit(s).

(k) If either party is represented by any broker or any other leasing agent, such party is responsible for all commission fee or other payment to such agent, and agrees to indemnify and hold the other party harmless from all claims by such broker or anyone claiming through such broker.

The effective date of this Lease is the date of execution by the last party to sign (the "Effective Date").

LANDLORD: William C. Hill

By: William C. Hill

Printed Name: William C. Hill

Title: Owner

Date: 11/1/07

TENANT: Powertel Memphis, Inc.

By: _____

Printed Name: Tami Nystrom

Title: Area Director of Engineering

Date: _____

T-Mobile Legal Approval

Site Number: 9LV071I
Site Name: Jarvis
Market: Louisville

Site Lease - version 9.21.07

EXHIBIT A
Legal Description

The Property is legally described as follows:

Beginning at a new corner in an old line where it intersects with the northeast right-of-way of Highway #601, and running with the old line N 47-00 E 345.94 feet* to an original corner, thence S 59-30 E 1435 feet* to an original corner; thence N 46-00 E 500 feet* to an original corner located behind the metal building, thence S 51 E 640 feet* to an original corner in Gardner Stovall's line, (Tract #8, Deed Book 209, Page 535), thence N 49-49 E 376.09 feet* to an original corner; thence N 25-13 E 279.15 feet* (old deed gave bearing as N 53-23 E) to a stake on the west side of the old County House Road, (now known as the Nebo Cemetery Road); thence running with the right-of-way in a southerly direction 1080 feet, more or less, to a new corner located in the center of a ditch, where said ditch intersects the west right-of-way of the Nebo Cemetery Road, thence with a new division line running in a westerly direction with the center line of said ditch 1080 feet, more or less, to a new corner, located north of a line extended from fence line and three feet west of the fence line; thence running with a new line (three feet west and parallel with the fence) 500 feet, more or less, to a new corner in the northeast right-of-way of Highway #601, thence running with the highway right-of-way in a westerly direction 125 feet, more or less, to a new corner in the old Gibbs line, now Creek Oil Company, thence running with the Creek Oil Company's line N 6 E 250 feet to an original corner, thence continuing with their line N 25 W 98 feet to an original corner; thence continuing with their line N 84 W 600 feet, more or less, to an original corner in Rolly's line, thence running with the division line between Stovall and the following lot owners: Rolley (Deed Book 406, Page 631), Hall (Deed Book _____, Page _____), Lewis (Deed Book 406, Page 119 or Deed Book 358, Page 405), Stewart (Deed Book 358, Page 131 or Deed Book 369, Page 371); Stewart (Deed

Book 300, Page 335 or Deed Book 369, Page 371); Realous (Deed Book _____, Page_ _____); Faith (Deed Book 312, Page 166); Groves (Deed Book 404, Page 2630), Jones (Deed Book 350, Page 177), [all of which lots were originally deeded to the above or their predecessors in title by Gardner Stovall and Kendrick S. Stovall and are identified in the PVA Office as Map #73, Lots #69-75] to the northeast right-of-way of Highway #601, thence with the said right-of-way to the point of beginning

The only minerals which the Parties of the First Part owns are the oil and gas, which mineral rights are conveyed, all other the minerals having been reserved by Sentry Royalty Company and are excepted

This property is subject to right-of-way easements in favor of Muhlenberg County Water District, Kentucky Utilities Company and South Central Bell, as same affects the above described property, including an easement to Kentucky Utilities recorded in D B 442, Page 664

Being the same property conveyed from Kendrick S. Stovall, widow, to Tommy Piper and wife, Brenda G. Piper, or survivor, by deed dated July 1, 1992 and recorded in the office of the Muhlenberg County Clerk in Deed Book 414, page 335.

EXHIBIT B

The location of the Premises within the Property (together with access and utilities) is more particularly described and depicted as follows:

[Enter Premises description here or on attachment(s)]

EXHIBIT C

Memorandum of Lease

MEMORANDUM OF LEASE

Assessor's Parcel Number: 090-00-00-013.003

Between William C. Hill ("Landlord") and Powertel Memphis, Inc. ("Tenant")

A Site Lease with Option (the "Lease") by and between William C. Hill, an individual ("Landlord") and Powertel Memphis, Inc., a Delaware corporation ("Tenant") was made regarding a portion of the following property:

See Attached Exhibit "A" incorporated herein for all purposes

The Option is for a term of twelve (12) months after the Effective Date of the Lease (as defined under the Lease), with up to one additional twelve (12) month renewal ("Optional Period")

The Lease is for a term of five (5) years and will commence on the date as set forth in the Lease (the "Commencement Date"). Tenant shall have the right to extend this Lease for five (5) additional and successive five-year terms

IN WITNESS WHEREOF, the parties hereto have respectively executed this memorandum effective as of the date of the last party to sign.

LANDLORD: William C. Hill

By: _____

Printed Name: _____

Title: _____

Date: _____

TENANT: Powertel Memphis, Inc

By: _____

Printed Name: Tami Nystrom

Title: Area Director of Engineering

Date: _____

Printed Name: _____

[Notary block for Landlord]

[Landlord Notary block for an Individual]

STATE OF _____)
) ss.
COUNTY OF _____)

This instrument was acknowledged before me on _____ by William C. Hill

Dated: _____

_____
Notary Public
Print Name _____
My commission expires _____

(Use this space for notary stamp/seal)

[Notary block for Tenant]

STATE OF _____)
) ss
COUNTY OF _____)

I certify that I know or have satisfactory evidence that Lani Nystrom is the person who appeared before me, and said person acknowledged that he signed this instrument, on oath stated that he was authorized to execute the instrument and acknowledged it as the Area Director of Engineering of Powertel Memphis, Inc., a Delaware corporation, to be the free and voluntary act of such party for the uses and purposes mentioned in the instrument.

Dated. _____

_____
Notary Public
Print Name _____
My commission expires _____

(Use this space for notary stamp/seal)

Site Number 9 x 0711
Site Name Jarvis
Market Louisville

Memorandum of Lease Exhibit A
Legal Description

The Property is legally described as follows:

Beginning at a new corner in an old line where it intersects with the northeast right-of-way of Highway #601, and running with the old line N 47-00 E 345.94 feet* to an original corner; thence S 59-30 E 1435 feet* to an original corner; thence N 46-00 E 500 feet* to an original corner located behind the metal building, thence S 51 E 640 feet* to an original corner in Gardner Stovall's line, (Tract #8, Deed Book 209, Page 535); thence N 49-49 E 376.09 feet* to an original corner, thence N 25-13 E 279.15 feet* (old deed gave bearing as N 53 23 E) to a stake on the west side of the old County House Road, (now known as the Nebo Cemetery Road); thence running with the right-of-way in a southerly direction 1080 feet, more or less, to a new corner located in the center of a ditch, where said ditch intersects the west right-of-way of the Nebo Cemetery Road; thence with a new division line running in a westerly direction with the center line of said ditch 1080 feet, more or less, to a new corner, located north of a line extended from fence line and three feet west of the fence line; thence running with a new line (three feet west and parallel with the fence) 500 feet, more or less, to a new corner in the northeast right-of-way of Highway #601; thence running with the highway right-of-way in a westerly direction 125 feet, more or less, to a new corner in the old Gibbs line, now Creek Oil Company, thence running with the Creek Oil Company's line N 6 E 250 feet to an original corner; thence continuing with their line N 26 W 98 feet to an original corner; thence continuing with their line N 84 W 600 feet, more or less, to an original corner in Rolly's line; thence running with the division line between Stovall and the following lot owners: Rolley (Deed Book 406, Page 631); Hall (Deed Book _____, Page_____); Lewis (Deed Book 406, Page 119 or Deed Book 358, Page 405); Stewart (Deed Book 358, Page 131 or Deed Book 369, Page 371); Stewart (Deed

Book 300, Page 335 or Deed Book 369, Page 371); Realous (Deed Book _____, Page_____); Faith (Deed Book 312, Page 166); Groves (Deed Book 404, Page 2630); Jones (Deed Book 350, Page 177), [all of which lots were originally deeded to the above or their predecessors in title by Gardner Stovall and Kendrick S. Stovall and are identified in the PVA Office as Map #73, Lots #69-75] to the northeast right-of-way of Highway #601; thence with the said right-of-way to the point of beginning

The only minerals which the Parties of the First Part owns are the oil and gas, which mineral rights are conveyed, all other the minerals having been reserved by Sentry Royalty Company and are excepted

This property is subject to right-of-way easements in favor of Muhlenberg County Water District, Kentucky Utilities Company and South Central Bell, as same affects the above described property, including an easement to Kentucky Utilities recorded in D.B. 442, Page 664.

Being the same property conveyed from Kendrick S. Stovall, widow, to Tommy Piper and wife, Brenda G. Piper, or survivor, by deed dated July 1, 1992 and recorded in the office of the Muhlenberg County Clerk in Deed Book 414, page 335

ADDENDUM TO SITE LEASE WITH OPTION
[Additional Terms]

In the event of conflict or inconsistency between the terms of this Addendum and this Lease, the terms of the Addendum shall govern and control. All capitalized terms shall have the same meaning as in this Lease.

Paragraph 4 will be deleted and replaced with the following.

4. Rent

(a) From and after the Commencement Date, Tenant shall pay Landlord or designee, as rent, per year ("Rent"). The first payment of Rent shall be due within twenty (20) days following the Commencement Date and thereafter Rent will be payable annually in advance on each anniversary of the Commencement date to Landlord at the address specified in Section 12 below. If this Lease is terminated for any reason (other than a default by Tenant), Rent shall be prorated as of the date of termination and all prepaid Rent shall be immediately refunded to Tenant.

(b) During the Initial Term and any Renewal Terms, annual Rent shall be adjusted, on each anniversary of the Commencement date, to an amount equal to One Hundred and Three percent (103%) of the annual Rent in effect immediately prior to the adjustment date.

LANDLORD: William C. Hill

By: William C. Hill

Printed Name: William C. Hill

Title: Owner

Date:

TENANT: Powertel Memphis, Inc.

By:

Printed Name: Tami Nystrom

Title: Area Director of Engineering

Date:

Site Number: 9B V0711
Site Name: Jarvis
Market: Louisville

Identity and Qualifications of each Person Directly Responsible for the Design of the Wireless Communication Facility

Frank L. Sellinger
Licensed Professional Land Surveyor (KY Lic. #3282)

Jeremy Potts, Construction Manager
Mittrex Engineering

Richard A. Linker, P.E., Geotechnical Engineer
Licensed Professional Engineer (KY Lic. #16420)

Timothy L. Hardy, P.E., Structural Engineer
Registered Professional Engineer (KY Lic. #20374)

Ta-Wen Lee, P.E., Design Engineer
Licensed Professional Engineer (KY Lic. #24589)

Timothy L. Hardy, P.E., A & E Engineer
Registered Professional Engineer (KY Lic. #20374)

Buford H. Evans, Jr., P.E., Foundation Engineer
Licensed Professional Engineer (KY Lic. #19839)

3209502_1.doc

Notice List
T-Mobile/Muhlenberg #2 ("Jarvis")
2020 Highway 601
Greenville, KY 42345
Map 90, Parcel 13.003

ALL PROPERTIES WITHIN 500 FEET OF TOWER SITE OR CONTIGUOUS TO PROPERTY ON WHICH TOWER IS TO BE LOCATED

Map 90, Parcel 13.002
Jeffrey G. & Sheri Clark
1825 Nebo Cemetery Road
Greenville, KY 42345

Map 90, Parcels 39.001, 39.002, 39.003 & 39.004
Mark Edward & Melissa Thompson
1755 Nebo Cemetery Rd.
Greenville, KY 42345

Map 90, Parcels 39.005, 39.006
Wesley K. & Cynthia L. Harper
1705 Nebo Cemetery Rd.
Greenville, KY 42345

Map 90, Parcels 39.007, 39.008 & 39.009, & 39.010
William C. Hill
900 Malone Farm Lane
Belton, KY 42324

Map 91-1, Parcel 001
Orville Wayne & Carolyn Fairchild
111 Nelson Lane
Greenville, KY 42345

Map 91-1, Parcel 002
Raymond W. McDonald
110 North Park Dr.
Greenville, KY 42345

Map 73, Parcel 069
Terry Lynn & Shelba Jones
2421 State Rt. 601
Greenville, KY 42345

Map 73, Parcel 070
Vickie Lynn Groves
2405 State Rt. 601
Greenville, KY 42345

Map 73, Parcel 071
Billie Faith
2365 State Rt. 601
Greenville, KY 42345

Map 73, Parcel 072
Mary Lewis
2315 State Rt. 601
Greenville, KY 42345

Map 73, Parcels 073 & 073.01
David & Peggy Piper
2281 State Rt. 601
Greenville, KY 42345

Map 73, Parcel 073.02
Marty Daniel & Ronda Sue Lewis
2253 State Rt. 601
Greenville, KY 42345

Map 73, Parcel 074
David Wayne & Diana Shadowen
810 Locketown Rd.
Graham, KY 42344

Map 73, Parcel 075
Gerald Ray Brooks, Jr. and Rhonda Brooks
2183 State Rt. 601
Greenville, KY 42345

Map 73, Parcel 76
Carl T. Steele, Jr.
236 N. Cherry St.
Greenville, KY 42345

Map 73, Parcel 76-01
Jace Slaughter
1950 U.S. Hwy. 62 W
Greenville, KY 42345

Map 73, Parcel, 038
Carl T. Steele
236 N. Cherry St.
Greenville, KY 42345

Map 74, Parcel 021
Gayle Baggett
2877 U.S. Hwy. 62 W
Greenville, KY 42345

Commonwealth of Kentucky
Office of Attorney General
Capital Bldg., Ste. 118
700 Capital Avenue
Frankfort, KY 40601

GOVERNMENT OFFICIAL:

Hon. Rick Newman
Muhlenberg County Judge Executive
P.O. Box 137
Greenville, KY 42345

GREENEBAUM
GREENEBAUM DOLL & MCDONALD PLLC

Paul B. Whitty
Direct (502) 587-3655 Fax (502) 540-2260 E-mail pbw@gdm.com

January 22, 2009

VIA CERTIFIED MAIL - RETURN RECEIPT REQUESTED

Map 90, Parcel 13.002
Jeffrey G. & Sheri Clark
1825 Nebo Cemetery Road
Greenville, KY 42345

RE: Notice of Proposed Construction of Wireless Communications Facility
Site Name: Jarvis/9LV0711A
Site Address: 2020 Highway 601, Greenville, Muhlenberg County, Kentucky 42345
Docket No. 2009 - 00021

Dear Neighbor:

Powertel/Memphis, Inc. d/b/a T-Mobile Kentucky ("T-Mobile") has filed an application with the Kentucky Public Service Commission ("PSC") to construct a new wireless communications facility on property located at 2020 Highway 601, Greenville, Muhlenberg County, Kentucky 42345. The proposed facility will include a 250-foot tall antenna tower, plus a 5-foot lightning rod and related ground facilities.

This notice is being sent to you because the Muhlenberg County Property Valuation Administrator's records indicate that you may own property that is within 500' of the proposed tower site or contiguous to the property on which the tower is to be located. You have a right to submit testimony to the PSC in writing, or to request intervention in the PSC's proceedings on the application. You may contact the PSC for additional information concerning this matter at: Kentucky Public Service Commission, Executive Director, 211 Sower Boulevard, P.O. Box 615, Frankfort, Kentucky 40602, Phone: (502) 564-3940. Please refer to Docket Number 2009 – 00021 in your correspondence or telephone calls.

We have attached a map showing the site location for the proposed tower. T-Mobile's radio frequency engineers assisted in selecting the proposed site for the tower, based on location and elevation needed to improve coverage and to provide quality service to wireless communications customers in this area. Please feel free to contact me at (502) 587-3655 with any comments or questions.

Sincerely,

Paul B. Whitty
Attorney for T-Mobile
PBW/abf

Enclosure
3204039_1.doc

GREENEBAUM
GREENEBAUM DOLL & MCDONALD PLLC

Paul B. Whitty
Direct (502) 587-3655 Fax (502) 540-2260 E-mail pbw@gdm.com

January 22, 2009

VIA CERTIFIED MAIL - RETURN RECEIPT REQUESTED

Map 90, Parcels 39.001, 39.002, 39.003 & 39.004
Mark Edward & Melissa Thompson
1755 Nebo Cemetery Rd.
Greenville, KY 42345

RE: Notice of Proposed Construction of Wireless Communications Facility
Site Name: Jarvis/9LV0711A
Site Address: 2020 Highway 601, Greenville, Muhlenberg County, Kentucky 42345
Docket No. 2009 - 00021

Dear Neighbor:

Powertel/Memphis, Inc. d/b/a T-Mobile Kentucky ("T-Mobile") has filed an application with the Kentucky Public Service Commission ("PSC") to construct a new wireless communications facility on property located at 2020 Highway 601, Greenville, Muhlenberg County, Kentucky 42345. The proposed facility will include a 250-foot tall antenna tower, plus a 5-foot lightning rod and related ground facilities.

This notice is being sent to you because the Muhlenberg County Property Valuation Administrator's records indicate that you may own property that is within 500' of the proposed tower site or contiguous to the property on which the tower is to be located. You have a right to submit testimony to the PSC in writing, or to request intervention in the PSC's proceedings on the application. You may contact the PSC for additional information concerning this matter at: Kentucky Public Service Commission, Executive Director, 211 Sower Boulevard, P.O. Box 615, Frankfort, Kentucky 40602, Phone: (502) 564-3940. Please refer to Docket Number 2009 – 00021 in your correspondence or telephone calls.

We have attached a map showing the site location for the proposed tower. T-Mobile's radio frequency engineers assisted in selecting the proposed site for the tower, based on location and elevation needed to improve coverage and to provide quality service to wireless communications customers in this area. Please feel free to contact me at (502) 587-3655 with any comments or questions.

Sincerely,

Paul B. Whitty
Attorney for T-Mobile
PBW/abf

Enclosure
3204039_1.doc

GREENEBAUM
GREENEBAUM DOLL & MCDONALD PLLC

Paul B. Whitty
Direct (502) 587-3655 Fax (502) 540-2260 E-mail pbw@gdm.com

January 22, 2009

VIA CERTIFIED MAIL - RETURN RECEIPT REQUESTED

Map 90, Parcels 39.005, 39.006
Wesley K. & Cynthia L. Harper
1705 Nebo Cemetery Rd.
Greenville, KY 42345

RE: Notice of Proposed Construction of Wireless Communications Facility
Site Name: Jarvis/9LV0711A
Site Address: 2020 Highway 601, Greenville, Muhlenberg County, Kentucky 42345
Docket No. 2009 - 00021

Dear Neighbor:

Powertel/Memphis, Inc. d/b/a T-Mobile Kentucky ("T-Mobile") has filed an application with the Kentucky Public Service Commission ("PSC") to construct a new wireless communications facility on property located at 2020 Highway 601, Greenville, Muhlenberg County, Kentucky 42345. The proposed facility will include a 250-foot tall antenna tower, plus a 5-foot lightning rod and related ground facilities.

This notice is being sent to you because the Muhlenberg County Property Valuation Administrator's records indicate that you may own property that is within 500' of the proposed tower site or contiguous to the property on which the tower is to be located. You have a right to submit testimony to the PSC in writing, or to request intervention in the PSC's proceedings on the application. You may contact the PSC for additional information concerning this matter at: Kentucky Public Service Commission, Executive Director, 211 Sower Boulevard, P.O. Box 615, Frankfort, Kentucky 40602, Phone: (502) 564-3940. Please refer to Docket Number 2009 – 00021 in your correspondence or telephone calls.

We have attached a map showing the site location for the proposed tower. T-Mobile's radio frequency engineers assisted in selecting the proposed site for the tower, based on location and elevation needed to improve coverage and to provide quality service to wireless communications customers in this area. Please feel free to contact me at (502) 587-3655 with any comments or questions.

Sincerely,

Paul B. Whitty
Attorney for T-Mobile
PBW/abf

Enclosure
3204039_1.doc

GREENEBAUM
GREENEBAUM DOLL & MCDONALD PLLC

Paul B. Whitty
Direct (502) 587-3655 Fax (502) 540-2260 E-mail pbw@gdm.com

January 22, 2009

VIA CERTIFIED MAIL - RETURN RECEIPT REQUESTED

Map 90, Parcels 39.007, 39.008 & 39.009, & 39.010
William C. Hill
900 Malone Farm Lane
Belton, KY 42324

RE: Notice of Proposed Construction of Wireless Communications Facility
Site Name: Jarvis/9LV0711A
Site Address: 2020 Highway 601, Greenville, Muhlenberg County, Kentucky 42345
Docket No. 2009 - 00021

Dear Neighbor:

Powertel/Memphis, Inc. d/b/a T-Mobile Kentucky ("T-Mobile") has filed an application with the Kentucky Public Service Commission ("PSC") to construct a new wireless communications facility on property located at 2020 Highway 601, Greenville, Muhlenberg County, Kentucky 42345. The proposed facility will include a 250-foot tall antenna tower, plus a 5-foot lightning rod and related ground facilities.

This notice is being sent to you because the Muhlenberg County Property Valuation Administrator's records indicate that you may own property that is within 500' of the proposed tower site or contiguous to the property on which the tower is to be located. You have a right to submit testimony to the PSC in writing, or to request intervention in the PSC's proceedings on the application. You may contact the PSC for additional information concerning this matter at: Kentucky Public Service Commission, Executive Director, 211 Sower Boulevard, P.O. Box 615, Frankfort, Kentucky 40602, Phone: (502) 564-3940. Please refer to Docket Number 2009 – 00021 in your correspondence or telephone calls.

We have attached a map showing the site location for the proposed tower. T-Mobile's radio frequency engineers assisted in selecting the proposed site for the tower, based on location and elevation needed to improve coverage and to provide quality service to wireless communications customers in this area. Please feel free to contact me at (502) 587-3655 with any comments or questions.

Sincerely,

Paul B. Whitty
Attorney for T-Mobile
PBW/abf

Enclosure
3204039_1.doc

GREENEBAUM
GREENEBAUM DOLL & McDONALD PLLC

Paul B. Whitty
Direct (502) 587-3655 Fax (502) 540-2260 E-mail pbw@gdm.com

January 22, 2009

VIA CERTIFIED MAIL - RETURN RECEIPT REQUESTED

Map 91-1, Parcel 001
Orville Wayne & Carolyn Fairchild
111 Nelson Lane
Greenville, KY 42345

RE: Notice of Proposed Construction of Wireless Communications Facility
Site Name: Jarvis/9LV0711A
Site Address: 2020 Highway 601, Greenville, Muhlenberg County, Kentucky 42345
Docket No. 2009 - 00021

Dear Neighbor:

Powertel/Memphis, Inc. d/b/a T-Mobile Kentucky ("T-Mobile") has filed an application with the Kentucky Public Service Commission ("PSC") to construct a new wireless communications facility on property located at 2020 Highway 601, Greenville, Muhlenberg County, Kentucky 42345. The proposed facility will include a 250-foot tall antenna tower, plus a 5-foot lightning rod and related ground facilities.

This notice is being sent to you because the Muhlenberg County Property Valuation Administrator's records indicate that you may own property that is within 500' of the proposed tower site or contiguous to the property on which the tower is to be located. You have a right to submit testimony to the PSC in writing, or to request intervention in the PSC's proceedings on the application. You may contact the PSC for additional information concerning this matter at: Kentucky Public Service Commission, Executive Director, 211 Sower Boulevard, P.O. Box 615, Frankfort, Kentucky 40602, Phone: (502) 564-3940. Please refer to Docket Number 2009 – 00021 in your correspondence or telephone calls.

We have attached a map showing the site location for the proposed tower. T-Mobile's radio frequency engineers assisted in selecting the proposed site for the tower, based on location and elevation needed to improve coverage and to provide quality service to wireless communications customers in this area. Please feel free to contact me at (502) 587-3655 with any comments or questions.

Sincerely,

Paul B. Whitty
Attorney for T-Mobile
PBW/abf

Enclosure
3204039_1.doc

GREENEBAUM
GREENEBAUM DOLL & MCDONALD PLLC

Paul B. Whitty
Direct (502) 587-3655 Fax (502) 540-2260 E-mail pbw@gdm.com

January 22, 2009

VIA CERTIFIED MAIL - RETURN RECEIPT REQUESTED

Map 91-1, Parcel 002
Raymond W. McDonald
110 North Park Dr.
Greenville, KY 42345

RE: Notice of Proposed Construction of Wireless Communications Facility
Site Name: Jarvis/9LV0711A
Site Address: 2020 Highway 601, Greenville, Muhlenberg County, Kentucky 42345
Docket No. 2009 - 00021

Dear Neighbor:

Powertel/Memphis, Inc. d/b/a T-Mobile Kentucky ("T-Mobile") has filed an application with the Kentucky Public Service Commission ("PSC") to construct a new wireless communications facility on property located at 2020 Highway 601, Greenville, Muhlenberg County, Kentucky 42345. The proposed facility will include a 250-foot tall antenna tower, plus a 5-foot lightning rod and related ground facilities.

This notice is being sent to you because the Muhlenberg County Property Valuation Administrator's records indicate that you may own property that is within 500' of the proposed tower site or contiguous to the property on which the tower is to be located. You have a right to submit testimony to the PSC in writing, or to request intervention in the PSC's proceedings on the application. You may contact the PSC for additional information concerning this matter at: Kentucky Public Service Commission, Executive Director, 211 Sower Boulevard, P.O. Box 615, Frankfort, Kentucky 40602, Phone: (502) 564-3940. Please refer to Docket Number 2009 – 00021 in your correspondence or telephone calls.

We have attached a map showing the site location for the proposed tower. T-Mobile's radio frequency engineers assisted in selecting the proposed site for the tower, based on location and elevation needed to improve coverage and to provide quality service to wireless communications customers in this area. Please feel free to contact me at (502) 587-3655 with any comments or questions.

Sincerely,

Paul B. Whitty
Attorney for T-Mobile
PBW/abf

Enclosure
3204039_1.doc

GREENEBAUM
GREENEBAUM DOLL & MCDONALD PLLC

Paul B. Whitty
Direct (502) 587-3655 Fax (502) 540-2260 E-mail pbw@gdm.com

January 22, 2009

VIA CERTIFIED MAIL - RETURN RECEIPT REQUESTED

Map 73, Parcel 069
Terry Lynn & Shelba Jones
2421 State Rt. 601
Greenville, KY 42345

RE: Notice of Proposed Construction of Wireless Communications Facility
Site Name: Jarvis/9LV0711A
Site Address: 2020 Highway 601, Greenville, Muhlenberg County, Kentucky 42345
Docket No. 2009 - 00021

Dear Neighbor:

Powertel/Memphis, Inc. d/b/a T-Mobile Kentucky ("T-Mobile") has filed an application with the Kentucky Public Service Commission ("PSC") to construct a new wireless communications facility on property located at 2020 Highway 601, Greenville, Muhlenberg County, Kentucky 42345. The proposed facility will include a 250-foot tall antenna tower, plus a 5-foot lightning rod and related ground facilities.

This notice is being sent to you because the Muhlenberg County Property Valuation Administrator's records indicate that you may own property that is within 500' of the proposed tower site or contiguous to the property on which the tower is to be located. You have a right to submit testimony to the PSC in writing, or to request intervention in the PSC's proceedings on the application. You may contact the PSC for additional information concerning this matter at: Kentucky Public Service Commission, Executive Director, 211 Sower Boulevard, P.O. Box 615, Frankfort, Kentucky 40602, Phone: (502) 564-3940. Please refer to Docket Number 2009 – 00021 in your correspondence or telephone calls.

We have attached a map showing the site location for the proposed tower. T-Mobile's radio frequency engineers assisted in selecting the proposed site for the tower, based on location and elevation needed to improve coverage and to provide quality service to wireless communications customers in this area. Please feel free to contact me at (502) 587-3655 with any comments or questions.

Sincerely,

Paul B. Whitty
Attorney for T-Mobile
PBW/abf

Enclosure
3204039_1.doc

GREENEBAUM
GREENEBAUM DOLL & MCDONALD PLLC

Paul B. Whitty
Direct (502) 587-3655 Fax (502) 540-2260 E-mail pbw@gdm.com

January 22, 2009

VIA CERTIFIED MAIL - RETURN RECEIPT REQUESTED

Map 73, Parcel 070
Vickie Lynn Groves
2405 State Rt. 601
Greenville, KY 42345

RE: Notice of Proposed Construction of Wireless Communications Facility
Site Name: Jarvis/9LV0711A
Site Address: 2020 Highway 601, Greenville, Muhlenberg County, Kentucky 42345
Docket No. 2009 - 00021

Dear Neighbor:

Powertel/Memphis, Inc. d/b/a T-Mobile Kentucky ("T-Mobile") has filed an application with the Kentucky Public Service Commission ("PSC") to construct a new wireless communications facility on property located at 2020 Highway 601, Greenville, Muhlenberg County, Kentucky 42345. The proposed facility will include a 250-foot tall antenna tower, plus a 5-foot lightning rod and related ground facilities.

This notice is being sent to you because the Muhlenberg County Property Valuation Administrator's records indicate that you may own property that is within 500' of the proposed tower site or contiguous to the property on which the tower is to be located. You have a right to submit testimony to the PSC in writing, or to request intervention in the PSC's proceedings on the application. You may contact the PSC for additional information concerning this matter at: Kentucky Public Service Commission, Executive Director, 211 Sower Boulevard, P.O. Box 615, Frankfort, Kentucky 40602, Phone: (502) 564-3940. Please refer to Docket Number 2009 – 00021 in your correspondence or telephone calls.

We have attached a map showing the site location for the proposed tower. T-Mobile's radio frequency engineers assisted in selecting the proposed site for the tower, based on location and elevation needed to improve coverage and to provide quality service to wireless communications customers in this area. Please feel free to contact me at (502) 587-3655 with any comments or questions.

Sincerely,

Paul B. Whitty

Paul B. Whitty
Attorney for T-Mobile
PBW/abf

Enclosure
3204039_1.doc

GREENEBAUM
GREENEBAUM DOLL & MCDONALD PLLC

Paul B. Whitty
Direct (502) 587-3655 Fax (502) 540-2260 E-mail pbw@gdm.com

January 22, 2009

VIA CERTIFIED MAIL - RETURN RECEIPT REQUESTED

Map 73, Parcel 071
Billie Faith
2365 State Rt. 601
Greenville, KY 42345

RE: Notice of Proposed Construction of Wireless Communications Facility
Site Name: Jarvis/9LV0711A
Site Address: 2020 Highway 601, Greenville, Muhlenberg County, Kentucky 42345
Docket No. 2009 - 00021

Dear Neighbor:

Powertel/Memphis, Inc. d/b/a T-Mobile Kentucky ("T-Mobile") has filed an application with the Kentucky Public Service Commission ("PSC") to construct a new wireless communications facility on property located at 2020 Highway 601, Greenville, Muhlenberg County, Kentucky 42345. The proposed facility will include a 250-foot tall antenna tower, plus a 5-foot lightning rod and related ground facilities.

This notice is being sent to you because the Muhlenberg County Property Valuation Administrator's records indicate that you may own property that is within 500' of the proposed tower site or contiguous to the property on which the tower is to be located. You have a right to submit testimony to the PSC in writing, or to request intervention in the PSC's proceedings on the application. You may contact the PSC for additional information concerning this matter at: Kentucky Public Service Commission, Executive Director, 211 Sower Boulevard, P.O. Box 615, Frankfort, Kentucky 40602, Phone: (502) 564-3940. Please refer to Docket Number 2009 – 00021 in your correspondence or telephone calls.

We have attached a map showing the site location for the proposed tower. T-Mobile's radio frequency engineers assisted in selecting the proposed site for the tower, based on location and elevation needed to improve coverage and to provide quality service to wireless communications customers in this area. Please feel free to contact me at (502) 587-3655 with any comments or questions.

Sincerely,

Paul B. Whitty

Paul B. Whitty
Attorney for T-Mobile
PBW/abf

Enclosure
3204039_1.doc

GREENEBAUM
GREENEBAUM DOLL & MCDONALD PLLC

Paul B. Whitty
Direct (502) 587-3655 Fax (502) 540-2260 E-mail pbw@gdm.com

January 22, 2009

VIA CERTIFIED MAIL - RETURN RECEIPT REQUESTED

Map 73, Parcel 072
Mary Lewis
2315 State Rt. 601
Greenville, KY 42345

RE: Notice of Proposed Construction of Wireless Communications Facility
Site Name: Jarvis/9LV0711A
Site Address: 2020 Highway 601, Greenville, Muhlenberg County, Kentucky 42345
Docket No. 2009 - 00021

Dear Neighbor:

Powertel/Memphis, Inc. d/b/a T-Mobile Kentucky ("T-Mobile") has filed an application with the Kentucky Public Service Commission ("PSC") to construct a new wireless communications facility on property located at 2020 Highway 601, Greenville, Muhlenberg County, Kentucky 42345. The proposed facility will include a 250-foot tall antenna tower, plus a 5-foot lightning rod and related ground facilities.

This notice is being sent to you because the Muhlenberg County Property Valuation Administrator's records indicate that you may own property that is within 500' of the proposed tower site or contiguous to the property on which the tower is to be located. You have a right to submit testimony to the PSC in writing, or to request intervention in the PSC's proceedings on the application. You may contact the PSC for additional information concerning this matter at: Kentucky Public Service Commission, Executive Director, 211 Sower Boulevard, P.O. Box 615, Frankfort, Kentucky 40602, Phone: (502) 564-3940. Please refer to Docket Number 2009 – 00021 in your correspondence or telephone calls.

We have attached a map showing the site location for the proposed tower. T-Mobile's radio frequency engineers assisted in selecting the proposed site for the tower, based on location and elevation needed to improve coverage and to provide quality service to wireless communications customers in this area. Please feel free to contact me at (502) 587-3655 with any comments or questions.

Sincerely,

Paul B. Whitty

Paul B. Whitty
Attorney for T-Mobile
PBW/abf

Enclosure
3204039_1.doc

GREENEBAUM
GREENEBAUM DOLL & MCDONALD PLLC

Paul B. Whitty
Direct (502) 587-3655 Fax (502) 540-2260 E-mail pbw@gdm.com

January 22, 2009

VIA CERTIFIED MAIL - RETURN RECEIPT REQUESTED

Map 73, Parcels 073 & 073.01
David & Peggy Piper
2281 State Rt. 601
Greenville, KY 42345

RE: Notice of Proposed Construction of Wireless Communications Facility
Site Name: Jarvis/9LV0711A
Site Address: 2020 Highway 601, Greenville, Muhlenberg County, Kentucky 42345
Docket No. 2009 - 00021

Dear Neighbor:

Powertel/Memphis, Inc. d/b/a T-Mobile Kentucky ("T-Mobile") has filed an application with the Kentucky Public Service Commission ("PSC") to construct a new wireless communications facility on property located at 2020 Highway 601, Greenville, Muhlenberg County, Kentucky 42345. The proposed facility will include a 250-foot tall antenna tower, plus a 5-foot lightning rod and related ground facilities.

This notice is being sent to you because the Muhlenberg County Property Valuation Administrator's records indicate that you may own property that is within 500' of the proposed tower site or contiguous to the property on which the tower is to be located. You have a right to submit testimony to the PSC in writing, or to request intervention in the PSC's proceedings on the application. You may contact the PSC for additional information concerning this matter at: Kentucky Public Service Commission, Executive Director, 211 Sower Boulevard, P.O. Box 615, Frankfort, Kentucky 40602, Phone: (502) 564-3940. Please refer to Docket Number 2009 – 00021 in your correspondence or telephone calls.

We have attached a map showing the site location for the proposed tower. T-Mobile's radio frequency engineers assisted in selecting the proposed site for the tower, based on location and elevation needed to improve coverage and to provide quality service to wireless communications customers in this area. Please feel free to contact me at (502) 587-3655 with any comments or questions.

Sincerely,

Paul B. Whitty
Attorney for T-Mobile
PBW/abf

Enclosure
3204039_1.doc

GREENEBAUM
GREENEBAUM DOLL & MCDONALD PLLC

Paul B. Whitty
Direct (502) 587-3655 Fax (502) 540-2260 E-mail pbw@gdm.com

January 22, 2009

VIA CERTIFIED MAIL - RETURN RECEIPT REQUESTED

Map 73, Parcel 073.02
Marty Daniel & Ronda Sue Lewis
2253 State Rt. 601
Greenville, KY 42345

RE: Notice of Proposed Construction of Wireless Communications Facility
Site Name: Jarvis/9LV0711A
Site Address: 2020 Highway 601, Greenville, Muhlenberg County, Kentucky 42345
Docket No. 2009 - 00021

Dear Neighbor:

Powertel/Memphis, Inc. d/b/a T-Mobile Kentucky ("T-Mobile") has filed an application with the Kentucky Public Service Commission ("PSC") to construct a new wireless communications facility on property located at 2020 Highway 601, Greenville, Muhlenberg County, Kentucky 42345. The proposed facility will include a 250-foot tall antenna tower, plus a 5-foot lightning rod and related ground facilities.

This notice is being sent to you because the Muhlenberg County Property Valuation Administrator's records indicate that you may own property that is within 500' of the proposed tower site or contiguous to the property on which the tower is to be located. You have a right to submit testimony to the PSC in writing, or to request intervention in the PSC's proceedings on the application. You may contact the PSC for additional information concerning this matter at: Kentucky Public Service Commission, Executive Director, 211 Sower Boulevard, P.O. Box 615, Frankfort, Kentucky 40602, Phone: (502) 564-3940. Please refer to Docket Number 2009 -- 00021 in your correspondence or telephone calls.

We have attached a map showing the site location for the proposed tower. T-Mobile's radio frequency engineers assisted in selecting the proposed site for the tower, based on location and elevation needed to improve coverage and to provide quality service to wireless communications customers in this area. Please feel free to contact me at (502) 587-3655 with any comments or questions.

Sincerely,

Paul B. Whitty
Attorney for T-Mobile
PBW/abf

Enclosure
3204039_1.doc

GREENEBAUM
GREENEBAUM DOLL & MCDONALD PLLC

Paul B. Whitty
Direct (502) 587-3655 Fax (502) 540-2260 E-mail pbw@gdm.com

January 22, 2009

VIA CERTIFIED MAIL - RETURN RECEIPT REQUESTED

Map 73, Parcel 074
David Wayne & Diana Shadowen
810 Locketown Rd.
Graham, KY 42344

RE: Notice of Proposed Construction of Wireless Communications Facility
Site Name: Jarvis/9LV0711A
Site Address: 2020 Highway 601, Greenville, Muhlenberg County, Kentucky 42345
Docket No. 2009 - 00021

Dear Neighbor:

Powertel/Memphis, Inc. d/b/a T-Mobile Kentucky ("T-Mobile") has filed an application with the Kentucky Public Service Commission ("PSC") to construct a new wireless communications facility on property located at 2020 Highway 601, Greenville, Muhlenberg County, Kentucky 42345. The proposed facility will include a 250-foot tall antenna tower, plus a 5-foot lightning rod and related ground facilities.

This notice is being sent to you because the Muhlenberg County Property Valuation Administrator's records indicate that you may own property that is within 500' of the proposed tower site or contiguous to the property on which the tower is to be located. You have a right to submit testimony to the PSC in writing, or to request intervention in the PSC's proceedings on the application. You may contact the PSC for additional information concerning this matter at: Kentucky Public Service Commission, Executive Director, 211 Sower Boulevard, P.O. Box 615, Frankfort, Kentucky 40602, Phone: (502) 564-3940. Please refer to Docket Number 2009 – 00021 in your correspondence or telephone calls.

We have attached a map showing the site location for the proposed tower. T-Mobile's radio frequency engineers assisted in selecting the proposed site for the tower, based on location and elevation needed to improve coverage and to provide quality service to wireless communications customers in this area. Please feel free to contact me at (502) 587-3655 with any comments or questions.

Sincerely,

Paul B. Whitty
Attorney for T-Mobile
PBW/abf

Enclosure
3204039_1.doc

GREENEBAUM
GREENEBAUM DOLL & McDONALD PLLC

Paul B. Whitty
Direct (502) 587-3655 Fax (502) 540-2260 E-mail pbw@gdm.com

January 22, 2009

VIA CERTIFIED MAIL - RETURN RECEIPT REQUESTED

Map 73, Parcel 76
Carl T. Steele, Jr.
236 N. Cherry St.
Greenville, KY 42345

RE: Notice of Proposed Construction of Wireless Communications Facility
Site Name: Jarvis/9LV0711A
Site Address: 2020 Highway 601, Greenville, Muhlenberg County, Kentucky 42345
Docket No. 2009 - 00021

Dear Neighbor:

Powertel/Memphis, Inc. d/b/a T-Mobile Kentucky ("T-Mobile") has filed an application with the Kentucky Public Service Commission ("PSC") to construct a new wireless communications facility on property located at 2020 Highway 601, Greenville, Muhlenberg County, Kentucky 42345. The proposed facility will include a 250-foot tall antenna tower, plus a 5-foot lightning rod and related ground facilities.

This notice is being sent to you because the Muhlenberg County Property Valuation Administrator's records indicate that you may own property that is within 500' of the proposed tower site or contiguous to the property on which the tower is to be located. You have a right to submit testimony to the PSC in writing, or to request intervention in the PSC's proceedings on the application. You may contact the PSC for additional information concerning this matter at: Kentucky Public Service Commission, Executive Director, 211 Sower Boulevard, P.O. Box 615, Frankfort, Kentucky 40602, Phone: (502) 564-3940. Please refer to Docket Number 2009 – 00021 in your correspondence or telephone calls.

We have attached a map showing the site location for the proposed tower. T-Mobile's radio frequency engineers assisted in selecting the proposed site for the tower, based on location and elevation needed to improve coverage and to provide quality service to wireless communications customers in this area. Please feel free to contact me at (502) 587-3655 with any comments or questions.

Sincerely,

Paul B. Whitty
Attorney for T-Mobile
PBW/abf

Enclosure
3204039_1.doc

GREENEBAUM
GREENEBAUM DOLL & MCDONALD PLLC

Paul B. Whitty
Direct (502) 587-3655 Fax (502) 540-2260 E-mail pbw@gdm.com

January 22, 2009

VIA CERTIFIED MAIL - RETURN RECEIPT REQUESTED

Map 73, Parcel 76-01
Jace Slaughter
1950 U.S. Hwy. 62 W
Greenville, KY 42345

RE: Notice of Proposed Construction of Wireless Communications Facility
Site Name: Jarvis/9LV0711A
Site Address: 2020 Highway 601, Greenville, Muhlenberg County, Kentucky 42345
Docket No. 2009 - 00021

Dear Neighbor:

Powertel/Memphis, Inc. d/b/a T-Mobile Kentucky ("T-Mobile") has filed an application with the Kentucky Public Service Commission ("PSC") to construct a new wireless communications facility on property located at 2020 Highway 601, Greenville, Muhlenberg County, Kentucky 42345. The proposed facility will include a 250-foot tall antenna tower, plus a 5-foot lightning rod and related ground facilities.

This notice is being sent to you because the Muhlenberg County Property Valuation Administrator's records indicate that you may own property that is within 500' of the proposed tower site or contiguous to the property on which the tower is to be located. You have a right to submit testimony to the PSC in writing, or to request intervention in the PSC's proceedings on the application. You may contact the PSC for additional information concerning this matter at: Kentucky Public Service Commission, Executive Director, 211 Sower Boulevard, P.O. Box 615, Frankfort, Kentucky 40602, Phone: (502) 564-3940. Please refer to Docket Number 2009 – 00021 in your correspondence or telephone calls.

We have attached a map showing the site location for the proposed tower. T-Mobile's radio frequency engineers assisted in selecting the proposed site for the tower, based on location and elevation needed to improve coverage and to provide quality service to wireless communications customers in this area. Please feel free to contact me at (502) 587-3655 with any comments or questions.

Sincerely,

Paul B. Whitty
Attorney for T-Mobile
PBW/abf

Enclosure
3204039_1 doc

GREENEBAUM
GREENEBAUM DOLL & MCDONALD PLLC

Paul B. Whitty
Direct (502) 587-3655 Fax (502) 540-2260 E-mail pbw@gdm.com

January 22, 2009

VIA CERTIFIED MAIL - RETURN RECEIPT REQUESTED

Map 73, Parcel, 038
Carl T. Steele
236 N. Cherry St.
Greenville, KY 42345

RE: Notice of Proposed Construction of Wireless Communications Facility
Site Name: Jarvis/9LV0711A
Site Address: 2020 Highway 601, Greenville, Muhlenberg County, Kentucky 42345
Docket No. 2009 - 00021

Dear Neighbor:

Powertel/Memphis, Inc. d/b/a T-Mobile Kentucky ("T-Mobile") has filed an application with the Kentucky Public Service Commission ("PSC") to construct a new wireless communications facility on property located at 2020 Highway 601, Greenville, Muhlenberg County, Kentucky 42345. The proposed facility will include a 250-foot tall antenna tower, plus a 5-foot lightning rod and related ground facilities.

This notice is being sent to you because the Muhlenberg County Property Valuation Administrator's records indicate that you may own property that is within 500' of the proposed tower site or contiguous to the property on which the tower is to be located. You have a right to submit testimony to the PSC in writing, or to request intervention in the PSC's proceedings on the application. You may contact the PSC for additional information concerning this matter at: Kentucky Public Service Commission, Executive Director, 211 Sower Boulevard, P.O. Box 615, Frankfort, Kentucky 40602, Phone: (502) 564-3940. Please refer to Docket Number 2009 – 00021 in your correspondence or telephone calls.

We have attached a map showing the site location for the proposed tower. T-Mobile's radio frequency engineers assisted in selecting the proposed site for the tower, based on location and elevation needed to improve coverage and to provide quality service to wireless communications customers in this area. Please feel free to contact me at (502) 587-3655 with any comments or questions.

Sincerely,

Paul B. Whitty
Attorney for T-Mobile
PBW/abf

Enclosure
3204039_1.doc

GREENEBAUM
GREENEBAUM DOLL & MCDONALD PLLC

Paul B. Whitty
Direct (502) 587-3655 Fax (502) 540-2260 E-mail pbw@gdm.com

January 22, 2009

VIA CERTIFIED MAIL - RETURN RECEIPT REQUESTED

Map 74, Parcel 021
Gayle Baggett
2877 U.S. Hwy. 62 W
Greenville, KY 42345

RE: Notice of Proposed Construction of Wireless Communications Facility
Site Name: Jarvis/9LV0711A
Site Address: 2020 Highway 601, Greenville, Muhlenberg County, Kentucky 42345
Docket No. 2009 - 00021

Dear Neighbor:

Powertel/Memphis, Inc. d/b/a T-Mobile Kentucky ("T-Mobile") has filed an application with the Kentucky Public Service Commission ("PSC") to construct a new wireless communications facility on property located at 2020 Highway 601, Greenville, Muhlenberg County, Kentucky 42345. The proposed facility will include a 250-foot tall antenna tower, plus a 5-foot lightning rod and related ground facilities.

This notice is being sent to you because the Muhlenberg County Property Valuation Administrator's records indicate that you may own property that is within 500' of the proposed tower site or contiguous to the property on which the tower is to be located. You have a right to submit testimony to the PSC in writing, or to request intervention in the PSC's proceedings on the application. You may contact the PSC for additional information concerning this matter at: Kentucky Public Service Commission, Executive Director, 211 Sower Boulevard, P.O. Box 615, Frankfort, Kentucky 40602, Phone: (502) 564-3940. Please refer to Docket Number 2009 – 00021 in your correspondence or telephone calls.

We have attached a map showing the site location for the proposed tower. T-Mobile's radio frequency engineers assisted in selecting the proposed site for the tower, based on location and elevation needed to improve coverage and to provide quality service to wireless communications customers in this area. Please feel free to contact me at (502) 587-3655 with any comments or questions.

Sincerely,

Paul B. Whitty
Attorney for T-Mobile
PBW/abf

Enclosure
3204039_1.doc

GREENEBAUM
GREENEBAUM DOLL & MCDONALD PLLC

Paul B. Whitty
Direct (502) 587-3655 Fax (502) 540-2260 E-mail pbw@gdm.com

January 22, 2009

VIA CERTIFIED MAIL - RETURN RECEIPT REQUESTED

Commonwealth of Kentucky - Office of Attorney General
Capital Bldg., Ste. 118
700 Capital Avenue
Frankfort, KY 40601

RE: Notice of Proposed Construction of Wireless Communications Facility
Site Name: Jarvis/9LV0711A
Site Address: 2020 Highway 601, Greenville, Muhlenberg County, Kentucky 42345
Docket No. 2009 - 00021

Dear Neighbor:

Powertel/Memphis, Inc. d/b/a T-Mobile Kentucky ("T-Mobile") has filed an application with the Kentucky Public Service Commission ("PSC") to construct a new wireless communications facility on property located at 2020 Highway 601, Greenville, Muhlenberg County, Kentucky 42345. The proposed facility will include a 250-foot tall antenna tower, plus a 5-foot lightning rod and related ground facilities.

This notice is being sent to you because the Muhlenberg County Property Valuation Administrator's records indicate that you may own property that is within 500' of the proposed tower site or contiguous to the property on which the tower is to be located. You have a right to submit testimony to the PSC in writing, or to request intervention in the PSC's proceedings on the application. You may contact the PSC for additional information concerning this matter at: Kentucky Public Service Commission, Executive Director, 211 Sower Boulevard, P.O. Box 615, Frankfort, Kentucky 40602, Phone: (502) 564-3940. Please refer to Docket Number 2009 – 00021 in your correspondence or telephone calls.

We have attached a map showing the site location for the proposed tower. T-Mobile's radio frequency engineers assisted in selecting the proposed site for the tower, based on location and elevation needed to improve coverage and to provide quality service to wireless communications customers in this area. Please feel free to contact me at (502) 587-3655 with any comments or questions.

Sincerely,

Paul B. Whitty
Attorney for T-Mobile
PBW/abf

Enclosure
3204039_1.doc

T··Mobile·

MAP FROM RF SHOWING SEARCH AREA WITH CANDIDATE DEPICTED

9LU0711

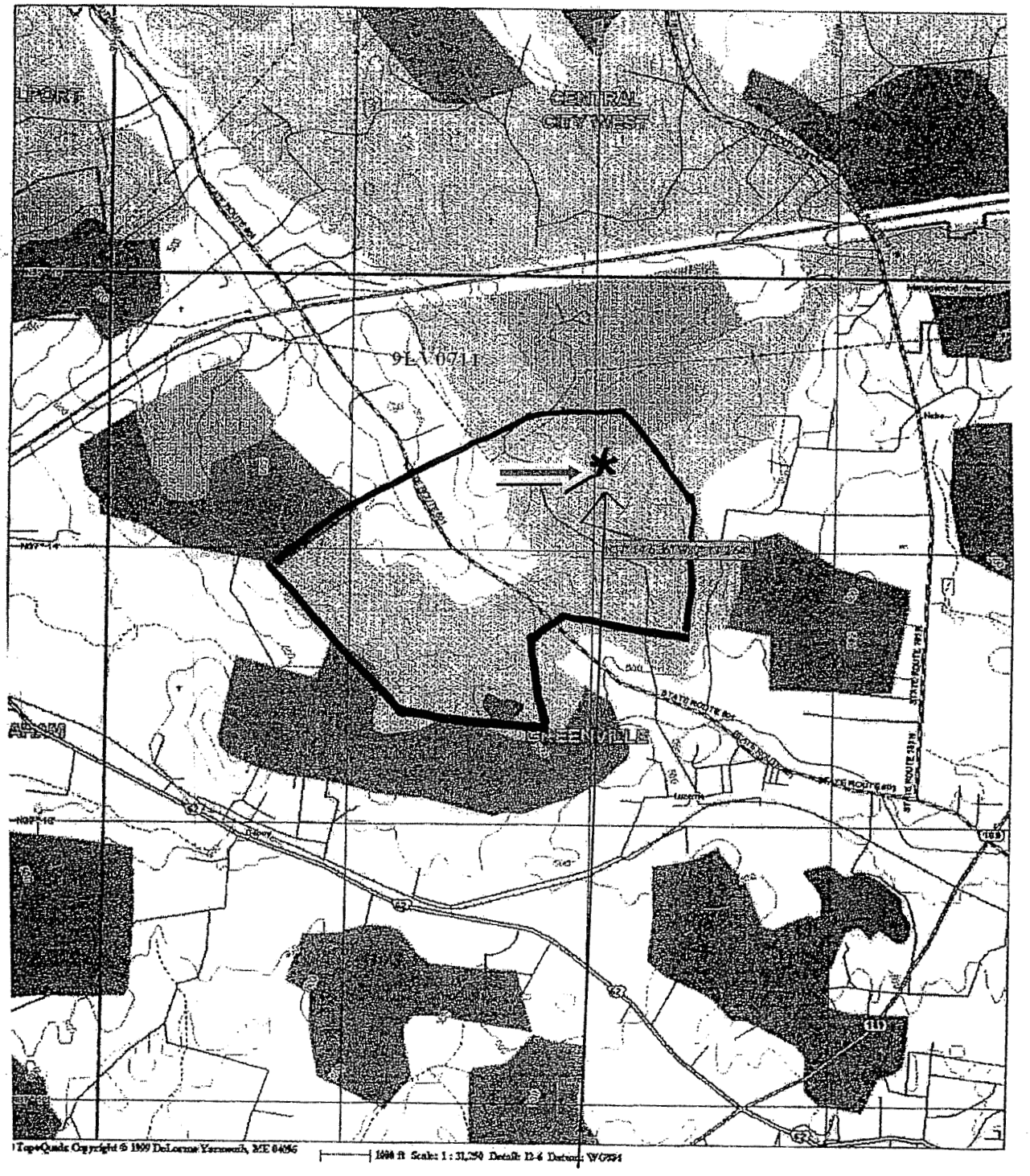

Site: 2020 Highway 601 Greenville, Ky 42345
Muhlenberg County

GREENEBAUM
GREENEBAUM DOLL & MCDONALD PLLC

Paul B. Whitty
Direct (502) 587-3655 Fax (502) 540-2260 E-mail pbw@gdm.com

January 22, 2009

VIA CERTIFIED MAIL - RETURN RECEIPT REQUESTED
Hon. Rick Newman
Muhlenberg County Judge Executive
P.O. Box 137
Greenville, KY 42345

RE: Notice of Proposed Construction of Wireless Communications Facility
Site Name: Jarvis/9LV0711A
Site Address: 2020 Highway 601, Greenville, Muhlenberg County, Kentucky 42345
Docket No. 2009 - 00021

Dear Judge Newman:

Powertel/Memphis, Inc. d/b/a T-Mobile Kentucky ("T-Mobile") has filed an application with the Kentucky Public Service Commission ("PSC") to construct a new wireless communications facility on property located at 2020 Highway 601, Greenville, Muhlenberg County, Kentucky 42345. The proposed facility will include a 250-foot tall antenna tower, plus a 5-foot lightning rod and related ground facilities.

You have a right to submit testimony to the PSC in writing, or to request intervention in the PSC's proceedings on the application. You may contact the PSC for additional information concerning this matter at: Kentucky Public Service Commission, Executive Director, 211 Sower Boulevard, P.O. Box 615, Frankfort, Kentucky 40602, Phone: (502) 564-3940. Please refer to Docket Number 2009 - 00021 in your correspondence or telephone calls.

We have attached a map showing the site location for the proposed tower. T-Mobile's radio frequency engineers assisted in selecting the proposed site for the tower, based on location and elevation needed to improve coverage and to provide quality service to wireless communications customers in this area. Please feel free to contact me at (502) 587-3655 with any comments or questions.

Sincerely,

Paul B. Whitty
Attorney for T-Mobile

PBW/abf
Enclosure

3204045_1 doc

T··Mobile·

MAP FROM RF SHOWING SEARCH AREA WITH CANDIDATE DEPICTED

9LU0711

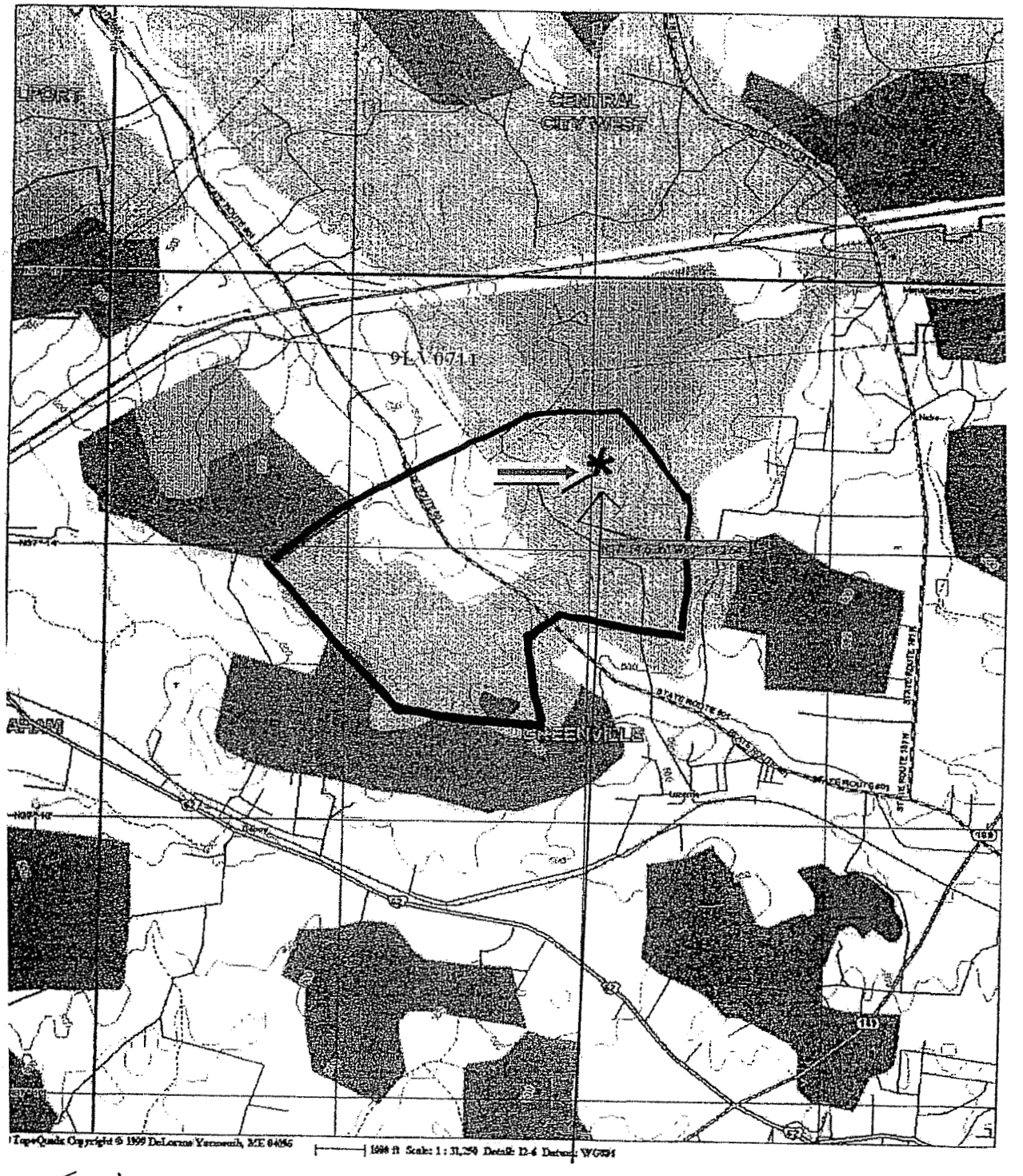

Site: 2020 Highway 601 Greenville, Ky 42345
Muhlenberg County

SITE NAME: JARVIS
2020 Highway 601
Greenville, Kentucky 42345

NOTICE SIGNS

The signs are to be at least (2) feet by four (4) feet in size, of durable material, with the text printed in black letters at least one (1) inch in height against a white background, except for the word "**tower**" which is at least (4) inches in height.

Sign to be posted on site:

Powertel/Memphis Inc. d/b/a T-Mobile Kentucky proposes to construct a telecommunications **tower** on this site. If you have questions, please contact Paul B. Whitty, Greenebaum Doll & McDonald, PLLC, 3500 National City Tower, Louisville, Kentucky 40202, (502) 587-3655, or the Executive Director, Public Service Commission, 211 Sower Boulevard, P.O. Box 615, Frankfort, Kentucky, 40602, (502) 564-3940. Please refer to Docket Number 2009 – 00021 in your correspondence or telephone calls.

Sign to be posted on nearest public road:

Powertel/Memphis Inc. d/b/a T-Mobile Kentucky proposes to construct a telecommunications **tower** near this site. If you have questions, please contact Paul B. Whitty, Greenebaum Doll & McDonald, PLLC, 3500 National City Tower, Louisville, Kentucky 40202, (502) 587-3655, or the Executive Director, Public Service Commission, 211 Sower Boulevard, P.O. Box 615, Frankfort, Kentucky, 40602, (502) 564-3940. Please refer to Docket Number 2009 – 00021 in your correspondence or telephone calls.

Tharp, Theresa A.

From: Tharp, Theresa A.
Sent: Wednesday, January 21, 2009 11:20 AM
To: 'ads@ky-leadernews.com'
Subject: Legal Ad for T-Mobile for the Leader News (Muhlenberg #2)

Please place the following legal ad in the Leader News. We would like for the ad to run on Tuesday, January 27, 2009.

Powertel Memphis, Inc. d/b/a T-Mobile Kentucky proposes to construct a telecommunications tower at 2020 Highway 601, Greenville, Muhlenberg County, Kentucky. For questions or comments please contact Paul Whitty, Attorney, Greenebaum Doll & McDonald, PLLC, 3500 National City Tower, Louisville, Kentucky 40202; or Kentucky Public Service Commission, Executive Director, 211 Sower Boulevard, P.O. Box 615, Frankfort, Kentucky 40602. Please refer to Docket Number 2009-00021 in your correspondence.

Please let me know immediately what the cost of this ad will be so that I may make arrangements for payment.

We will need proof of publication, and ask that you send same to me at the address shown below.

Thank you for your assistance with this matter.

Theresa A. Tharp
Paralegal
Greenebaum Doll & McDonald, PLLC
3500 National City Tower
Louisville, KY 40202
Office: (502) 587-3748
Fax: (502) 540-2291
Cell: (502) 541-8212
Email: tae@gdm.com

T··Mobile·

MAP FROM RF SHOWING SEARCH AREA WITH CANDIDATE DEPICTED

9LU0711

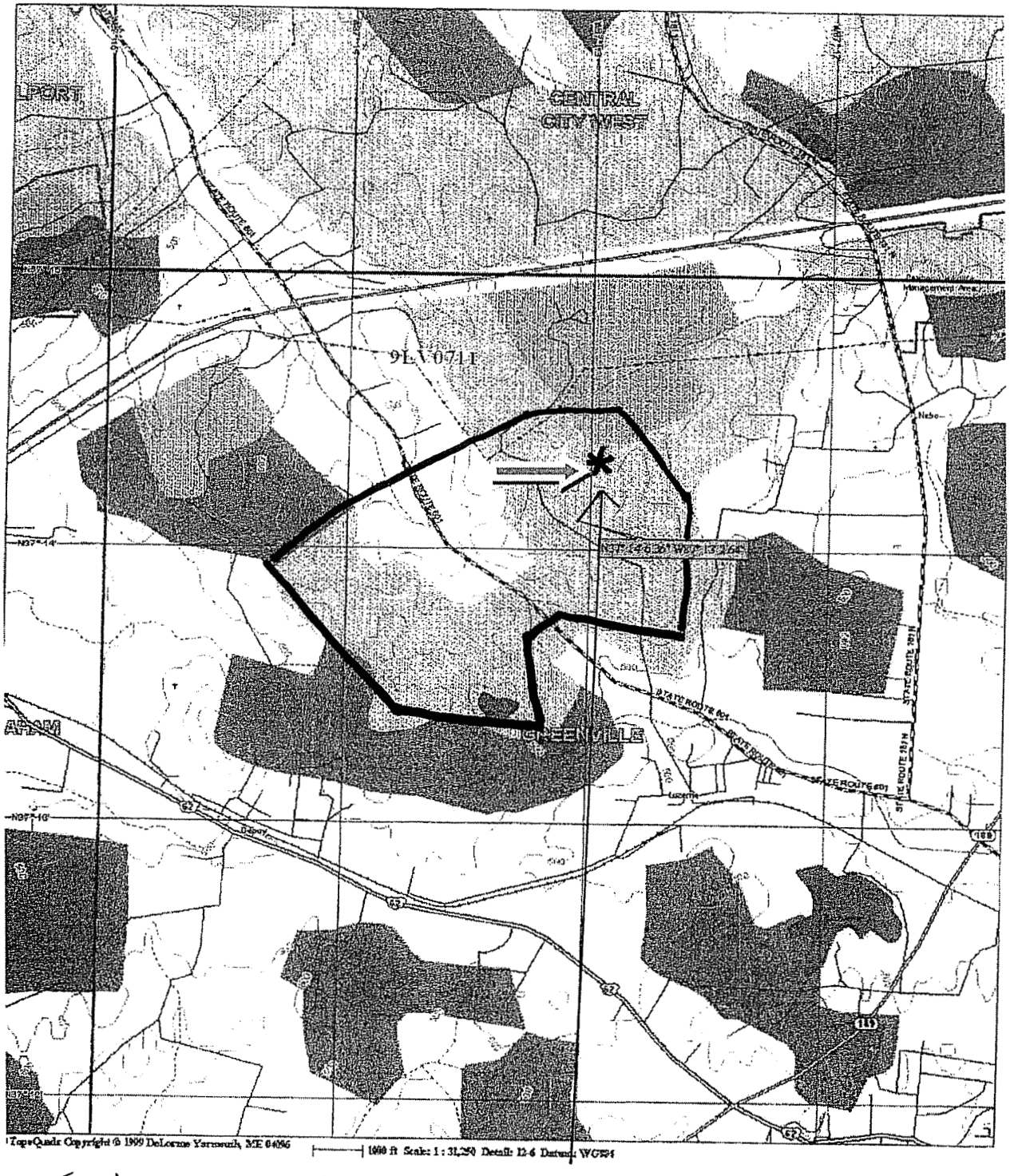

Site: 2020 Highway 601 Greenville, Ky 42345
Muhlenberg County