BELLSOUTH® / CLEC Agreement

Customer Name: ACCESS Integrated Networks, Inc.,

ACCESS Integrated Networks, Inc.	3
Loop Makeup Amendment - ACCESS Integrated	480
Amendment - Loop/Port Combos & EELs	490
Access Integrated-Coin Amendment	526
Access Integrated-Amendment TRA Perm Rates	548
Acc. Int. DA-TN Amend	583
Access Integrated - 4w DS1	585
LATAwide Local Calling Amendment	613
2wire DID Port Amendment	615
Vertical Svcs. Amendment	618
FL Final Rate Amendment - 8/30/01	644
TN Rate Correction Amendment - 8/30/01	681
11/28/01-LA Final UNE Order Amendment	708
1/21/02-FL&MS Final UNE AMendment	747
SC Ordered Rate Amend - 3/18/02	749
Access Int Amendment - URCF	751
ACCESS Integrated Networks, Inc.,	752
ACCESS Integrated Networks, Inc., - Updated rates	754
Access Integrated - Port Amendment	756
ACCESS Integrated Networks, Inc.,	757
ACCESS Integrated Networks, Inc.,	758
Access Integrated - Amendment to update mkt combo rates	759
Access Integrated Networks - Amendment to add EO switching rates	761
Access Integrated - Amendment to add FL ordered rates	763
ACCESS Integrated Networks, Inc. - Adoption of FastAccess Provision	764
Access Integrated Loop Port Combo Amendment	766
ACCESS Integrated Networks, Inc.,-SCPSC-ADUF RATES	767

Note: This page is not part of the actual signed contract/amendment, but is present for record keeping purposes only.

Amendment NC PSC ADUF Rates	769
ACCESS Integrated Networks, Inc., Extend Term	771
ACCESS Integrated Networks, Inc.,	772
ACCESS Integrated Networks - LA ADSL Amendment	773
AIN Loop Tagging Amendment	781

Note: This page is not part of the actual signed contract/amendment, but is present for record keeping purposes only.

EXECUTIVE SUMMARY
of

BellSouth Standard Resale Agreement

Agreement Effective Date: 02/17/2000	**Agreement Expiration Date: 02/16/2003**
Negotiator: Ida Bourne	**Negotiator Tel No:404-927-7511**
OCN:	

Attachment Name/Number	Section Number	Version Date	No Deviation	Deviation	Deviation Affect Compliance Y/N	If Compliance Item, Priority H/M/L	If Deviation, enter Paragraph No. And Brief Description of Deviation. If different by state, note here also.
Terms/Conditions PartA	1	3/06/00	X				
	2	3/06/00		X	Y	H	Term of agreement three years beginning February 17, 2000, except as set forth in section of of Attachment 2.
	3	3/06/00	X				
	4	3/06/00	X				
	5	3/06/00	X				
	6	3/06/00	X				
	7	3/06/00	X				
	8	3/06/00	X				
	9	3/06/00	X				
	10	3/06/00	X				
	11	3/06/00	X				
	12	3/06/00	X				
	13	3/06/00	X				
	14	3/06/00	X				
	15	3/06/00	X				
	16	3/06/00	X				
	17	3/06/00	X				
	18	3/06/00	X				
	19	3/06/00	X				
	20	3/06/00	X				
	21	3/06/00	X				

Version1Q00

EXECUTIVE SUMMARY
of

BellSouth Standard Resale Agreement

Attachment Name/Number	Section Number	Version Date	No Deviation	Deviation	Deviation Affect Compliance Y/N	If Compliance Item, Priority H/M/L	If Deviation, enter Paragraph No. And Brief Description of Deviation. If different by state, note here also.
	22	3/06/00	X				
	23	3/06/00	X				
	24	3/06/00	X				
	25	3/06/00	X				
	26	3/06/00	X				
Terms/Conditions Part B		3/06/00	X				
1-Resale	1	3/06/00	X				
	2	3/06/00	X				
	3	3/06/00	X				
	4	3/06/00	X				
	5	3/06/00	X				
	6	3/06/00	X				
	7	3/06/00	X				
	8	3/06/00	X				
	9	3/06/00	X				
	10	3/06/00	X				
	11	3/06/00	X				
	12	3/06/00	X				
	Exhibit A	3/06/00	X				
	Exhibit B	3/06/00	X				
	Exhibit C	3/06/00	X				
	Exhibit D	3/06/00	X				
	Exhibit E	3/06/00	X				
	Exhibit F	3/06/00	X				
	Exhibit G	3/06/00	X				

EXECUTIVE SUMMARY
of

BellSouth Standard Resale Agreement

Attachment Name/Number	Section Number	Version Date	No Devia-tion	Deviation	Deviation Affect Compliance Y/N	If Compliance Item, Priority H/M/L	If Deviation, enter Paragraph No. And Brief Description of Deviation. If different by state, note here also.
2-Network Elements & Other Services	1	3/06/00	X				
	2	3/06/00	X				
	3	3/06/00	X				
	4	3/06/00	X				
	5	3/06/00	X				
	6	3/06/00		X	Y	H	5.3.2.1 – Rates for circuit switching, where BellSouth is not required, pursuant to Section 5.1, to provide circuit switching are as set forth in Exhibit C of this Attachment. BellSouth shall provide ACCESS Integrated these market rates for a period of seven (7) years from the effective date of the Agreement. The Parties recognize that this period of 7 years is longer than the term of the Agreement. Accordingly, the Parties agree that, for purposes of this section 5.3.2.1, and for the duration of this section, they shall be bound by the terms and conditions, including but not limited to the rates, set out in the Agreement as well as in any subsequent interconnection agreement that may be entered into by the Parties as a result of negotiations, arbitration, adoption of another company's interconnection agreement, or otherwise. The governing terms and conditions for any given time shall be those set out in the interconnection agreement in effect between the Parties at such time. If, at the expiration of the Agreement or any subsequent interconnection

Attachment Name/Number	Section Number	Version Date	No Deviation	Deviation	Deviation Affect Compliance Y/N	If Compliance Item, Priority H/M/L	If Deviation, enter Paragraph No. And Brief Description of Deviation. If different by state, note here also.
							agreement, ACCESS Integrated does not enter into a replacement interconnection agreement with BellSouth, then this section 5.3.2.1 shall terminate.
	7	3/06/00	X				
	8	3/06/00	X				
	9	3/06/00	X				
	10	3/06/00	X				
	11	3/06/00	X				
	12	3/06/00	X				
	13	3/06/00	X				
	Exhibit A	3/06/00	X				
	Exhibit B	3/06/00	X				
	Exhibit C	3/27/00	X				
3-Local Interconnection	1	3/06/00	X				
	2	3/06/00	X				
	3	3/06/00	X				
	4	3/06/00	X				
	5	3/06/00	X				
	6	3/06/00	X				
	7	3/06/00	X				
	8	3/06/00	X				
	Exhibit A	3/27/00	X				
	Exhibit B	3/06/00	X				
	Exhibit C	3/06/00	X				
	Exhibit D	3/06/00	X				
	Exhibit E	3/06/00	X				

EXECUTIVE SUMMARY
of

BellSouth Standard Resale Agreement

Attachment Name/Number	Section Number	Version Date	No Deviation	Deviation	Deviation Affect Compliance Y/N	If Compliance Item, Priority H/M/L	If Deviation, enter Paragraph No. And Brief Description of Deviation. If different by state, note here also.
4-Physical Collocation	1	3/06/00	X				
	2	3/06/00	X				
	3	3/06/00	X				
	4	3/06/00	X				
	5	3/06/00	X				
	6	3/06/00	X				
	7	3/06/00	X				
	8	3/06/00	X				
	9	3/06/00	X				
	10	3/06/00	X				
	11	3/06/00	X				
	12	3/06/00	X				
	13	3/06/00	X				
	14	3/06/00	X				
	Exhibit A	3/06/00	X				
	Exhibit B	3/06/00	X				
5-Access to Numbers & Number Portability	1	3/06/00	X				
	2	3/06/00	X				
	3	3/06/00	X				
	4	3/06/00	X				
	5	3/06/00	X				
	6	3/06/00	X				
	7	3/06/00	X				
	Exhibit A	3/06/00	X				
6-Ordering/Provisioning	1	3/06/00	X				

EXECUTIVE SUMMARY
of

BellSouth Standard Resale Agreement

Attachment Name/Number	Section Number	Version Date	No Devia-tion	Deviation	Deviation Affect Compliance Y/N	If Compliance Item, Priority H/M/L	If Deviation, enter Paragraph No. And Brief Description of Deviation. If different by state, note here also.
	2	3/06/00	X				
	3	3/06/00	X				
7-Billing & Billing Accuracy Certification	1	3/06/00	X				
	2	3/06/00	X				
	3	3/06/00	X				
	4	3/06/00	X				
	5	3/06/00	X				
	6	3/06/00	X				
	7	3/06/00	X				
	Exhibit A	3/06/00	X				
8-ROW/Conduits/PoleAtt	1	3/06/00	X				
9-Perf Measurement	Scope	3/06/00	X				
	Reporting	3/06/00	X				
	Modifications to Measurements	3/06/00	X				
	Enforcement Mechanisms	3/06/00	X				
	Appendix A	3/06/00	X				
	Appendix B	03/06/00	X				
	Appendix C	03/06/00	X				
	Appendix D	03/06/00	X				
	Appendix E	03/06/00	X				
Attachment 10 – Agreement Template		03/06/00	X				
Attachment 11- BellSouth Disaster Recovery Plan		03/06/00	X				

EXECUTIVE SUMMARY
of

BellSouth Standard Resale Agreement

Agreement

between

BellSouth Telecommunications, Inc.

and

ACCESS Integrated Networks, Inc.

TABLE OF CONTENTS

General Terms and Conditions
Part A

1. Purpose
2. Term of the Agreement
3. Ordering Procedures
4. Parity
5. White Pages Listings
6. Bona Fide Request/New Business Request Process for Further Unbundling
7. Court Ordered Requests for Call Detail Records and Other Subscriber Information
8. Liability and Indemnification
9. Intellectual Property Rights and Indemnification
10. Treatment of Proprietary and Confidential Information
11. Assignments
12. Resolution of Disputes
13. Taxes
14. Force Majeure
15. Year 2000 Compliance
16. Modification of Agreement
17. Waivers
18. Governing Law
19. Arm's Length Negotiations
20. Notices
21. Rule of Construction
22. Headings of No Force or Effect
23. Multiple Counterparts
24. Implementation of Agreement
25. Filing of Agreement
26. Entire Agreement

Part B - Definitions

Attachment 1 - Resale
Attachment 2 - Network Elements and Other Services
Attachment 3 - Network Interconnection
Attachment 4 - Physical Collocation
Attachment 5 - Access to Numbers and Number Portability
Attachment 6 - Ordering and Provisioning
Attachment 7 - Billing and Billing Accuracy Certification
Attachment 8 - Rights-of-Way, Conduits and Pole Attachments
Attachment 9 - Performance Measurements
Attachment 10- Agreement Implementation Template
Attachment 11- BellSouth Disaster Recovery Plan

AGREEMENT

THIS AGREEMENT is made by and between BellSouth Telecommunications, Inc., ("BellSouth"), a Georgia corporation, and ACCESS Integrated Networks, Inc., (ACCESS Integrated") a Georgia corporation, and shall be deemed effective as of February 17, 2000. This Agreement may refer to either BellSouth or ACCESS Integrated or both as a "Party" or "Parties."

W I T N E S S E T H

WHEREAS, BellSouth is a local exchange telecommunications company authorized to provide telecommunications services in the states of Alabama, Florida, Georgia, Kentucky, Louisiana, Mississippi, North Carolina, South Carolina and Tennessee; and

WHEREAS, ACCESS Integrated is or seeks to become an alternative local exchange telecommunications company ("CLEC") authorized to provide telecommunications services in the states of Alabama, Florida, Georgia, Kentucky, Louisiana, Mississippi, North Carolina, South Carolina, and Tennessee; and

WHEREAS, the Parties wish to resell BellSouth's telecommunications services and/or interconnect their facilities, purchase network elements and other services, and exchange traffic specifically for the purposes of fulfilling their obligations pursuant to sections 251 and 252 of the Telecommunications Act of 1996 ("the Act").

NOW THEREFORE, in consideration of the mutual agreements contained herein, BellSouth and ACCESS Integrated agree as follows:

1. Purpose

The Parties agree that the rates, terms and conditions contained within this Agreement, including all Attachments, comply and conform with each Parties' obligations under sections 251 and 252 of the Act. The resale, access and interconnection obligations contained herein enable ACCESS Integrated to provide competing telephone exchange service to residential and business subscribers within the territory of BellSouth. The Parties agree that ACCESS Integrated will not be considered to have offered telecommunications services to the public in any state within BellSouth's region until such time as it has ordered services for resale or interconnection facilities for the purposes of providing business and/or residential local exchange service to customers.

2. Term of the Agreement

2.1 The term of this Agreement shall be three years, beginning February 17, 2000, except as set forth in section 5 of Attachment 2 of this Agreement, and shall apply to the states of Alabama, Florida, Georgia, Kentucky, Louisiana, Mississippi, North Carolina, South Carolina and Tennessee. If as of the expiration of this Agreement, a Subsequent Agreement (as defined in Section 2.2 below) has not been executed by the Parties, this Agreement shall continue on a month-to-month basis while a Subsequent Agreement is being negotiated. The Parties' rights and obligations with respect to this Agreement after expiration shall be as set forth in Section 2.4 below.

2.2 The Parties agree that by no later than one hundred and eighty (180) days prior to the expiration of this Agreement, they shall commence negotiations with regard to the terms, conditions and prices of resale and/or local interconnection to be effective beginning on the expiration date of this Agreement ("Subsequent Agreement").

2.3 If, within one hundred and thirty-five (135) days of commencing the negotiation referred to in Section 2.2 above, the Parties are unable to satisfactorily negotiate new resale and/or local interconnection terms, conditions and prices, either Party may petition the Commission to establish appropriate local interconnection and/or resale arrangements pursuant to 47 U.S.C. 252. The Parties agree that, in such event, they shall encourage the Commission to issue its order regarding the appropriate local interconnection and/or resale arrangements no later than the expiration date of this Agreement. The Parties further agree that in the event the Commission does not issue its order prior to the expiration date of this Agreement, or if the Parties continue beyond the expiration date of this Agreement to negotiate the local interconnection and/or resale arrangements without Commission intervention, the terms, conditions and prices ultimately ordered by the Commission, or negotiated by the Parties, will be effective retroactive to the day following the expiration date of this Agreement.

2.4 Notwithstanding the foregoing, in the event that as of the date of expiration of this Agreement and conversion of this Agreement to a month-to-month term, the Parties have not entered into a Subsequent Agreement and either no arbitration proceeding has been filed in accordance with Section 2.3 above, or the Parties have not mutually agreed (where permissible) to extend the arbitration window for petitioning the applicable Commission(s) for resolution of those terms upon which the Parties have not agreed, then either Party may terminate this Agreement upon sixty (60) days notice to the other Party. In the event that BellSouth terminates this Agreement as provided above, BellSouth shall continue to offer services to ACCESS Integrated pursuant to the terms, conditions and rates set forth in BellSouth's Statement of Generally Available Terms (SGAT) to the extent an SGAT has been approved by the applicable Commission(s). If any state Commission has not approved a BellSouth SGAT, then upon BellSouth's

termination of this Agreement as provided herein, BellSouth will continue to provide services to ACCESS Integrated pursuant to BellSouth's then current standard interconnection agreement. In the event that the SGAT or BellSouth's standard interconnection agreement becomes effective as between the Parties, the Parties may continue to negotiate a Subsequent Agreement, and the terms of such Subsequent Agreement shall be effective retroactive to the day following expiration of this Agreement.

3. Ordering Procedures

3.1 ACCESS Integrated shall provide BellSouth its Carrier Identification Code (CIC), Operating Company Number (OCN), Group Access Code (GAC) and Access Customer Name and Address (ACNA) code as applicable prior to placing its first order.

3.2 The Parties agree to adhere to the BellSouth Local Interconnection and Facility Based Ordering Guide and Resale Ordering Guide, as appropriate for the services ordered.

3.3 ACCESS Integrated shall pay charges for Operational Support Systems (OSS) as set forth in this Agreement in Attachment 1 and/or in Attachment 2, 3, 5 and 7 as applicable.

4. Parity

When ACCESS Integrated purchases, pursuant to Attachment 1 of this Agreement, telecommunications services from BellSouth for the purposes of resale to end users, BellSouth shall provide said services so that the services are equal in quality, subject to the same conditions, and provided within the same provisioning time intervals that BellSouth provides to its affiliates, subsidiaries and end users. To the extent technically feasible, the quality of a Network Element, as well as the quality of the access to such Network Element provided by BellSouth to ACCESS Integrated shall be at least equal in quality to that which BellSouth provides to itself. The quality of the interconnection between the networks of BellSouth and the network of ACCESS Integrated shall be at a level that is equal to that which BellSouth provides itself, a subsidiary, an Affiliate, or any other party. The interconnection facilities shall be designed to meet the same technical criteria and service standards that are used within BellSouth's network and shall extend to a consideration of service quality as perceived by end users and service quality as perceived by ACCESS Integrated.

5. White Pages Listings

BellSouth shall provide ACCESS Integrated and their customers access to white pages directory listings under the following terms:

5.1 Listings. ACCESS Integrated shall provide all new, changed and deleted listings on a timely basis and BellSouth or its agent will include ACCESS Integrated residential and business customer listings in the appropriate White Pages (residential and business) or alphabetical directories. Directory listings will make no distinction between ACCESS Integrated and BellSouth subscribers.

5.2 Rates. BellSouth and ACCESS Integrated will provide to each other subscriber primary listing information in the White Pages for a non-recurring charge.

5.3 Procedures for Submitting ACCESS Integrated Subscriber Information are found in BellSouth's Ordering Guide for manually processed listings and in the Local Exchange Ordering Guide for mechanically submitted listings.

5.3.1 Notwithstanding any provision(s) to the contrary, ACCESS Integrated agrees to provide to BellSouth, and BellSouth agrees to accept, ACCESS Integrated's Subscriber Listing Information (SLI) relating to ACCESS Integrated's customers in the geographic area(s) covered by this Interconnection Agreement. ACCESS Integrated authorizes BellSouth to release all such ACCESS Integrated SLI provided to BellSouth by ACCESS Integrated to qualifying third parties via either license agreement or BellSouth's Directory Publishers Database Service (DPDS), General Subscriber Services Tariff, Section A38.2, as the same may be amended from time to time. Such CLEC SLI shall be intermingled with BellSouth's own customer listings of any other CLEC that has authorized a similar release of SLI. Where necessary, BellSouth will use good faith efforts to obtain state commission approval of any necessary modifications to Section A38.2 of its tariff to provide for release of third party directory listings, including modifications regarding listings to be released pursuant to such tariff and BellSouth's liability therunder. BellSouth's obligation pursuant to this Section shall not arise in any particular state until the commission of such state has approved modifications to such tariff.

5.3.2 No compensation shall be paid to ACCESS Integrated for BellSouth's receipt of ACCESS Integrated SLI, or for the subsequent release to third parties of such SLI. In addition, to the extent BellSouth incurs costs to modify its systems to enable the release of CLEC'1s SLI, or costs on an ongoing basis to administer the release of ACCESS Integrated SLI, ACCESS Integrated shall pay to BellSouth its proportionate share of the reasonable costs associated therewith.

5.3.3 BellSouth shall not be liable for the content or accuracy of any SLI provided by ACCESS Integrated under this Agreement. ACCESS Integrated shall indemnify, hold harmless and defend BellSouth from and against any damages, losses, liabilities, demands claims, suits, judgments, costs and expenses (including but not limited to reasonable attorneys' fees and expenses) arising from BellSouth's tariff obligations or otherwise and resulting from or arising out of any third party's claim of inaccurate ACCESS Integrated listings or use of the SLI provided pursuant to this Agreement. BellSouth shall forward to ACCESS Integrated any

complaints received by BellSouth relating to the accuracy or quality of ACCESS Integrated listings.

5.3.4 Listings and subsequent updates will be released consistent with BellSouth system changes and/or update scheduling requirements.

5.4 Unlisted/Non-Published Subscribers. ACCESS Integrated will be required to provide to BellSouth the names, addresses and telephone numbers of all ACCESS Integrated customers that wish to be omitted from directories.

5.5 Inclusion of ACCESS Integrated Customers in Directory Assistance Database. BellSouth will include and maintain ACCESS Integrated subscriber listings in BellSouth's Directory Assistance databases at no recurring charge and ACCESS Integrated shall provide such Directory Assistance listings at no recurring charge. BellSouth and ACCESS Integrated will formulate appropriate procedures regarding lead-time, timeliness, format and content of listing information.

5.6 Listing Information Confidentiality. BellSouth will accord ACCESS Integrated's directory listing information the same level of confidentiality that BellSouth accords its own directory listing information, and BellSouth shall limit access to ACCESS Integrated's customer proprietary confidential directory information to those BellSouth employees who are involved in the preparation of listings.

5.7 Optional Listings. Additional listings and optional listings will be offered by BellSouth at tariffed rates as set forth in the General Subscriber Services Tariff.

5.8 Delivery. BellSouth or its agent shall deliver White Pages directories to ACCESS Integrated subscribers at no charge or as specified in a separate BAPCO agreement.

6. Bona Fide Request/New Business Request Process for Further Unbundling

If ACCESS Integrated is a facilities based provider or a facilities based and resale provider, this section shall apply. BellSouth shall, upon request of ACCESS Integrated, provide to ACCESS Integrated access to its network elements at any technically feasible point for the provision of ACCESS Integrated's telecommunications service where such access is necessary and failure to provide access would impair the ability of ACCESS Integrated to provide services that it seeks to offer. Any request by ACCESS Integrated for access to a network element, interconnection option, or for the provisioning of any service or product that is not already available shall be treated as a Bona Fide Request/New Business Request, and shall be submitted to BellSouth pursuant to the Bona Fide Request/New Business Request process set forth following.

6.1 A Bona Fide Request/New Business Request shall be submitted in writing to ACCESS Integrated's Account Manager by ACCESS Integrated and shall

specifically identify the requested service date, technical requirements, space requirements and/or such specifications that clearly define the request such that BellSouth has sufficient information to analyze and prepare a response. Such a request also shall include ACCESS Integrated's designation of the request as being (i) pursuant to the Telecommunications Act of 1996 or (ii) pursuant to the needs of the business.

7. Court Ordered Requests for Call Detail Records and Other Subscriber Information

7.1 To the extent technically feasible, BellSouth maintains call detail records for ACCESS Integrated end users for limited time periods and can respond to subpoenas and court ordered requests for this information. BellSouth shall maintain such information for ACCESS Integrated end users for the same length of time it maintains such information for its own end users.

7.2 ACCESS Integrated agrees that BellSouth will respond to subpoenas and court ordered requests delivered directly to BellSouth for the purpose of providing call detail records when the targeted telephone numbers belong to ACCESS Integrated end users. Billing for such requests will be generated by BellSouth and directed to the law enforcement agency initiating the request.

7.3 Where BellSouth is providing to ACCESS Integrated telecommunications services for resale or providing to ACCESS Integrated the local switching function, then ACCESS Integrated agrees that in those cases where ACCESS Integrated receives subpoenas or court ordered requests regarding targeted telephone numbers belonging to ACCESS Integrated end users, if ACCESS Integrated does not have the requested information, ACCESS Integrated will advise the law enforcement agency initiating the request to redirect the subpoena or court ordered request to BellSouth. Where the request has been forwarded to BellSouth, billing for call detail information will be generated by BellSouth and directed to the law enforcement agency initiating the request.

7.4 In all other instances, ACCESS Integrated will provide ACCESS Integrated end user and/or other customer information that is available to ACCESS Integrated in response to subpoenas and court orders for their own customer records. When BellSouth receives subpoenas or court ordered requests regarding targeted telephone numbers belonging to ACCESS Integrated end users, BellSouth will advise the law enforcement agency initiating the request to redirect the subpoena or court ordered request to ACCESS Integrated.

8. Liability and Indemnification

8.1 BellSouth Liability. BellSouth shall take financial responsibility for its own actions in causing, or its lack of action in preventing, unbillable or uncollectible ACCESS Integrated revenues.

8.2 ACCESS Integrated Liability. In the event that ACCESS Integrated consists of two (2) or more separate entities as set forth in the preamble to this Agreement, all such entities shall be jointly and severally liable for the obligations of ACCESS Integrated under this Agreement.

8.3 Liability for Acts or Omissions of Third Parties. Neither BellSouth nor ACCESS Integrated shall be liable for any act or omission of another telecommunications company providing a portion of the services provided under this Agreement.

8.4 Limitation of Liability.

8.4.1 Each Party's liability to the other for any loss, cost, claim, injury or liability or expense, including reasonable attorney's fees relating to or arising out of any negligent act or omission in its performance of this Agreement whether in contract or in tort, shall be limited to a credit for the actual cost of the services or functions not performed or improperly performed.

8.4.2 Limitations in Tariffs. A Party may, in its sole discretion, provide in its tariffs and contracts with its Customer and third parties that relate to any service, product or function provided or contemplated under this Agreement, that to the maximum extent permitted by Applicable Law, such Party shall not be liable to Customer or third Party for (i) any Loss relating to or arising out of this Agreement, whether in contract, tort or otherwise, that exceeds the amount such Party would have charged that applicable person for the service, product or function that gave rise to such Loss and (ii) Consequential Damages. To the extent that a Party elects not to place in its tariffs or contracts such limitations of liability, and the other Party incurs a Loss as a result thereof, such Party shall indemnify and reimburse the other Party for that portion of the Loss that would have been limited had the first Party included in its tariffs and contracts the limitations of liability that such other Party included in its own tariffs at the time of such Loss.

8.4.3 Neither BellSouth nor ACCESS Integrated shall be liable for damages to the other's terminal location, POI or other company's customers' premises resulting from the furnishing of a service, including, but not limited to, the installation and removal of equipment or associated wiring, except to the extent caused by a company's negligence or willful misconduct or by a company's failure to properly ground a local loop after disconnection.

8.4.4 Under no circumstance shall a Party be responsible or liable for indirect, incidental, or consequential damages, including, but not limited to, economic loss or lost business or profits, damages arising from the use or performance of equipment or software, or the loss of use of software or equipment, or accessories attached thereto, delay, error, or loss of data. In connection with this limitation of liability, each Party recognizes that the other Party may, from time to time, provide advice, make recommendations, or supply other analyses related to the

Services, or facilities described in this Agreement, and, while each Party shall use diligent efforts in this regard, the Parties acknowledge and agree that this limitation of liability shall apply to provision of such advice, recommendations, and analyses.

8.5 Indemnification for Certain Claims. The Party providing services hereunder, its affiliates and its parent company, shall be indemnified, defended and held harmless by the Party receiving services hereunder against any claim, loss or damage arising from the receiving company's use of the services provided under this Agreement pertaining to (1) claims for libel, slander or invasion of privacy arising from the content of the receiving company's own communications, or (2) any claim, loss or damage claimed by the customer of the Party receiving services arising from such company's use or reliance on the providing company's services, actions, duties, or obligations arising out of this Agreement.

8.6 Disclaimer. EXCEPT AS SPECIFICALLY PROVIDED TO THE CONTRARY IN THIS AGREEMENT, NEITHER PARTY MAKES ANY REPRESENTATIONS OR WARRANTIES TO THE OTHER PARTY CONCERNING THE SPECIFIC QUALITY OF ANY SERVICES, OR FACILITIES PROVIDED UNDER THIS AGREEMENT. THE PARTIES DISCLAIM, WITHOUT LIMITATION, ANY WARRANTY OR GUARANTEE OF MERCHANTABILITY OR FITNESS FOR A PARTICULAR PURPOSE, ARISING FROM COURSE OF PERFORMANCE, COURSE OF DEALING, OR FROM USAGES OF TRADE.

9. Intellectual Property Rights and Indemnification

9.1 No License. No patent, copyright, trademark or other proprietary right is licensed, granted or otherwise transferred by this Agreement. ACCESS Integrated is strictly prohibited from any use, including but not limited to in sales, in marketing or advertising of telecommunications services, of any BellSouth name, service mark or trademark.

9.2 Ownership of Intellectual Property. Any intellectual property which originates from or is developed by a Party shall remain in the exclusive ownership of that Party. Except for a limited license to use patents or copyrights to the extent necessary for the Parties to use any facilities or equipment (including software) or to receive any service solely as provided under this Agreement, no license in patent, copyright, trademark or trade secret, or other proprietary or intellectual property right now or hereafter owned, controlled or licensable by a Party, is granted to the other Party or shall be implied or arise by estoppel. It is the responsibility of each Party to ensure at no additional cost to the other Party that it has obtained any necessary licenses in relation to intellectual property of third Parties used in its network that may be required to enable the other Party to use any facilities or equipment (including software), to receive any service, or to perform its respective obligations under this Agreement.

9.3 Indemnification. The Party providing a service pursuant to this Agreement will defend the Party receiving such service or data provided as a result of such service against claims of infringement arising solely from the use by the receiving Party of such service and will indemnify the receiving Party for any damages awarded based solely on such claims in accordance with Section 8 of this Agreement.

9.4 Claim of Infringement. In the event that use of any facilities or equipment (including software), becomes, or in reasonable judgment of the Party who owns the affected network is likely to become, the subject of a claim, action, suit, or proceeding based on intellectual property infringement, then said Party shall promptly and at its sole expense, but subject to the limitations of liability set forth below:

9.4.1 modify or replace the applicable facilities or equipment (including software) while maintaining form and function, or

9.4.2 obtain a license sufficient to allow such use to continue.

9.4.3 In the event 9.4.1 or 9.4.2 are commercially unreasonable, then said Party may, terminate, upon reasonable notice, this contract with respect to use of, or services provided through use of, the affected facilities or equipment (including software), but solely to the extent required to avoid the infringement claim.

9.5 Exception to Obligations. Neither Party's obligations under this Section shall apply to the extent the infringement is caused by: (i) modification of the facilities or equipment (including software) by the indemnitee; (ii) use by the indemnitee of the facilities or equipment (including software) in combination with equipment or facilities (including software) not provided or authorized by the indemnitor provided the facilities or equipment (including software) would not be infringing if used alone; (iii) conformance to specifications of the indemnitee which would necessarily result in infringement; or (iv) continued use by the indemnitee of the affected facilities or equipment (including software) after being placed on notice to discontinue use as set forth herein.

9.6 Exclusive Remedy. The foregoing shall constitute the Parties' sole and exclusive remedies and obligations with respect to a third party claim of intellectual property infringement arising out of the conduct of business under this Agreement.

10. Proprietary and Confidential Information

10.1 Proprietary and Confidential Information: Defined. It may be necessary for BellSouth and ACCESS Integrated, each as the “Discloser,” to provide to the other party, as “Recipient,” certain proprietary and confidential information(including trade secret information) including but not limited to technical,

financial, marketing, staffing and business plans and information, strategic information, , proposals, request for proposals, specifications, drawings, prices, costs, procedures, processes, business systems, software programs, techniques, customer account data, call detail records and like information (collectively the Discloser's"Information"). All Information shall be provided to Recipient in written or other tangible or electronic form, clearly marked with a confidential and, proprietary notice . Information orally or visually provided to Recipient must be designated by Discloser as confidential and proprietary at the time of such disclosure and must be reduced to writing marked with a confidential and proprietary notice and provided to Recipient within thirty (30) calendar days after such oral or visual disclosure.

10.2 Use and Protection of Information. Recipient shall use the Information solely for the purpose(s) of performing this Agreement, and Recipient shall protect Information from any use, distribution or disclosure except as permitted hereunder. Recipient will use the same standard of care to protect Information as Recipient uses to protect its own similar confidential and proprietary information, but not less than a reasonable standard of care. Recipient may disclose Information solely to the Authorized Representatives of the Recipient who (a) have a substantive need to know such Information in connection with performance of the Agreement; (b) have been advised of the confidential and proprietary nature of the Information; and (c) have personally agreed in writing to protect from unauthorized disclosure all confidential and proprietary information, of whatever source, to which they have access in the course of their employment. "Authorized Representatives" are the officers, directors and employees of Recipient and its Affiliates, as well as Recipient's and its Affiliates' consultants, contractors, counsel and agents. " Affiliates" means any company that is owned in whole or in part, now or in the future, directly or indirectly through a subsidiary, by a party hereto.

10.3 Ownership, Copying & Return of Information. Information remains at all times the property of Discloser. Recipient may make tangible or electronic copies, notes, summaries or extracts of Information only as necessary for use as authorized herein. All such tangible or electronic copies, notes, summaries or extracts must be marked with the same confidential and proprietary notice as appears on the original. Upon Discloser's request, all or any requested portion of the Information (including, but not limited to, tangible and electronic copies, notes, summaries or extracts of any information) will be promptly returned to Discloser or destroyed , and Recipient will provide Discloser with written certification stating that such Information has been returned or destroyed.

10.4 Exceptions . Discloser's Information does not include: (a) any information publicly disclosed by Discloser; (b) any information Discloser in writing authorizes Recipient to disclose without restriction; (c) any information already lawfully known to Recipient at the time it is disclosed by the Discloser, without an obligation to keep confidential; or (d) any information Recipient lawfully

obtains from any source other than Discloser, provided that such source lawfully disclosed and/or independently developed such information. If Recipient is required to provide Information to any court or government agency pursuant to written court order, subpoena, regulation or process of law, Recipient must first provided Discloser with prompt written notice of such requirement and cooperate with Discloser to appropriately protect against or limit the scope of such disclosure. To the fullest extent permitted by law, Recipient will continue to protect as confidential and proprietary all Information disclosed in response to a written court order, subpoena, regulation or process of law.

10.5 Equitable Relief. Recipient acknowledges and agrees that any breach or threatened breach of this Agreement is likely to cause Discloser irreparable harm for which money damages may not be an appropriate or sufficient remedy. Recipient therefore agrees that Discloser or its Affiliates, as the case may be, are entitled to receive injunctive or other equitable relief to remedy or prevent any breach or threatened breach of this Agreement. Such remedy is not the exclusive remedy for any breach or threatened breach of this Agreement, but is in addition to all other rights and remedies available at law or in equity.

10.6 Survival of Confidentiality Obligations. The parties' rights and obligations under this Section 10 shall survive and continue in effect until two (2) years after the expiration or termination date of this Agreement with regard to all Information exchanged during the term of this Agreement. Thereafter, the parties' rights and obligations hereunder survive and continue in effect with respect to any Information that is a trade secret under applicable law.

11. Assignments

Any assignment by either Party to any non-affiliated entity of any right, obligation or duty, or of any other interest hereunder, in whole or in part, without the prior written consent of the other Party shall be void. A Party may assign this Agreement or any right, obligation, duty or other interest hereunder to an Affiliate company of the Party without the consent of the other Party. All obligations and duties of any Party under this Agreement shall be binding on all successors in interest and assigns of such Party. No assignment or delegation hereof shall relieve the assignor of its obligations under this Agreement in the event that the assignee fails to perform such obligations.

12. Resolution of Disputes

Except as otherwise stated in this Agreement, the Parties agree that if any dispute arises as to the interpretation of any provision of this Agreement or as to the proper implementation of this Agreement, either Party may petition the Commission for a resolution of the dispute. However, each Party reserves any rights it may have to seek judicial review of any ruling made by the Commission concerning this Agreement.

13. Taxes

13.1 Definition. For purposes of this Section, the terms "taxes" and "fees" shall include but not limited to federal, state or local sales, use, excise, gross receipts or other taxes or tax-like fees of whatever nature and however designated (including tariff surcharges and any fees, charges or other payments, contractual or otherwise, for the use of public streets or rights of way, whether designated as franchise fees or otherwise) imposed, or sought to be imposed, on or with respect to the services furnished hereunder or measured by the charges or payments therefore, excluding any taxes levied on income.

13.2 Taxes and Fees Imposed Directly On Either Providing Party or Purchasing Party.

13.2.1 Taxes and fees imposed on the providing Party, which are not permitted or required to be passed on by the providing Party to its customer, shall be borne and paid by the providing Party.

13.2.2 Taxes and fees imposed on the purchasing Party, which are not required to be collected and/or remitted by the providing Party, shall be borne and paid by the purchasing Party.

13.3 Taxes and Fees Imposed on Purchasing Party But Collected And Remitted By Providing Party.

13.3.1 Taxes and fees imposed on the purchasing Party shall be borne by the purchasing Party, even if the obligation to collect and/or remit such taxes or fees is placed on the providing Party.

13.3.2 To the extent permitted by applicable law, any such taxes and/or fees shall be shown as separate items on applicable billing documents between the Parties. Notwithstanding the foregoing, the purchasing Party shall remain liable for any such taxes and fees regardless of whether they are actually billed by the providing Party at the time that the respective service is billed.

13.3.3 If the purchasing Party determines that in its opinion any such taxes or fees are not payable, the providing Party shall not bill such taxes or fees to the purchasing Party if the purchasing Party provides written certification, reasonably satisfactory to the providing Party, stating that it is exempt or otherwise not subject to the tax or fee, setting forth the basis therefor, and satisfying any other requirements under applicable law. If any authority seeks to collect any such tax or fee that the purchasing Party has determined and certified not to be payable, or any such tax or fee that was not billed by the providing Party, the purchasing Party may contest the same in good faith, at its own expense. In any such contest, the purchasing Party shall promptly furnish the providing Party with copies of all filings in any proceeding, protest, or legal challenge, all rulings issued in connection therewith, and all correspondence between the purchasing Party and the taxing authority.

13.3.4 In the event that all or any portion of an amount sought to be collected must be paid in order to contest the imposition of any such tax or fee, or to avoid the existence of a lien on the assets of the providing Party during the pendency of such contest, the purchasing Party shall be responsible for such payment and shall be entitled to the benefit of any refund or recovery.

13.3.5 If it is ultimately determined that any additional amount of such a tax or fee is due to the imposing authority, the purchasing Party shall pay such additional amount, including any interest and penalties thereon.

13.3.6 Notwithstanding any provision to the contrary, the purchasing Party shall protect, indemnify and hold harmless (and defend at the purchasing Party's expense) the providing Party from and against any such tax or fee, interest or penalties thereon, or other charges or payable expenses (including reasonable attorney fees) with respect thereto, which are incurred by the providing Party in connection with any claim for or contest of any such tax or fee.

13.3.7 Each Party shall notify the other Party in writing of any assessment, proposed assessment or other claim for any additional amount of such a tax or fee by a taxing authority; such notice to be provided, if possible, at least ten (10) days prior to the date by which a response, protest or other appeal must be filed, but in no event later than thirty (30) days after receipt of such assessment, proposed assessment or claim.

13.4 Taxes and Fees Imposed on Providing Party But Passed On To Purchasing Party.

13.4.1 Taxes and fees imposed on the providing Party, which are permitted or required to be passed on by the providing Party to its customer, shall be borne by the purchasing Party.

13.4.2 To the extent permitted by applicable law, any such taxes and/or fees shall be shown as separate items on applicable billing documents between the Parties. Notwithstanding the foregoing, the purchasing Party shall remain liable for any such taxes and fees regardless of whether they are actually billed by the providing Party at the time that the respective service is billed.

13.4.3 If the purchasing Party disagrees with the providing Party's determination as to the application or basis for any such tax or fee, the Parties shall consult with respect to the imposition and billing of such tax or fee. Notwithstanding the foregoing, the providing Party shall retain ultimate responsibility for determining whether and to what extent any such taxes or fees are applicable, and the purchasing Party shall abide by such determination and pay such taxes or fees to the providing Party. The providing Party shall further retain ultimate responsibility for determining whether and how to contest the imposition of such

taxes and fees; provided, however, that any such contest undertaken at the request of the purchasing Party shall be at the purchasing Party's expense.

13.4.4 In the event that all or any portion of an amount sought to be collected must be paid in order to contest the imposition of any such tax or fee, or to avoid the existence of a lien on the assets of the providing Party during the pendency of such contest, the purchasing Party shall be responsible for such payment and shall be entitled to the benefit of any refund or recovery.

13.4.5 If it is ultimately determined that any additional amount of such a tax or fee is due to the imposing authority, the purchasing Party shall pay such additional amount, including any interest and penalties thereon.

13.4.6 Notwithstanding any provision to the contrary, the purchasing Party shall protect indemnify and hold harmless (and defend at the purchasing Party's expense) the providing Party from and against any such tax or fee, interest or penalties thereon, or other reasonable charges or payable expenses (including reasonable attorney fees) with respect thereto, which are incurred by the providing Party in connection with any claim for or contest of any such tax or fee.

13.4.7 Each Party shall notify the other Party in writing of any assessment, proposed assessment or other claim for any additional amount of such a tax or fee by a taxing authority; such notice to be provided, if possible, at least ten (10) days prior to the date by which a response, protest or other appeal must be filed, but in no event later than thirty (30) days after receipt of such assessment, proposed assessment or claim.

13.5 Mutual Cooperation. In any contest of a tax or fee by one Party, the other Party shall cooperate fully by providing records, testimony and such additional information or assistance as may reasonably be necessary to pursue the contest. Further, the other Party shall be reimbursed for any reasonable and necessary out-of-pocket copying and travel expenses incurred in assisting in such contest.

14. Force Majeure

In the event performance of this Agreement, or any obligation hereunder, is either directly or indirectly prevented, restricted, or interfered with by reason of fire, flood, earthquake or like acts of God, wars, revolution, civil commotion, explosion, acts of public enemy, embargo, acts of the government in its sovereign capacity, labor difficulties, including without limitation, strikes, slowdowns, picketing, or boycotts, unavailability of equipment from vendor, changes requested by Customer, or any other circumstances beyond the reasonable control and without the fault or negligence of the Party affected, the Party affected, upon giving prompt notice to the other Party, shall be excused from such performance on a day-to-day basis to the extent of such prevention, restriction, or interference (and the other Party shall likewise be excused from performance of its obligations

on a day-to-day basis until the delay, restriction or interference has ceased); provided however, that the Party so affected shall use diligent efforts to avoid or remove such causes of non-performance and both Parties shall proceed whenever such causes are removed or cease.

15. Year 2000 Compliance

Each Party warrants that it has implemented a program the goal of which is to ensure that all software, hardware and related materials (collectively called "Systems") delivered, connected with BellSouth or supplied in the furtherance of the terms and conditions specified in this Agreement: (i) will record, store, process and display calendar dates falling on or after January 1, 2000, in the same manner, and with the same functionality as such software records, stores, processes and calendar dates falling on or before December 31, 1999; and (ii) shall include without limitation date data century recognition, calculations that accommodate same century and multicentury formulas and date values, and date data interface values that reflect the century.

16. Modification of Agreement

16.1 BellSouth shall make available, pursuant to 47 USC § 252 and the FCC rules and regulations regarding such availability, to ACCESS Integrated any interconnection, service, or network element provided under any other agreement filed and approved pursuant to 47 USC § 252. The Parties shall adopt all rates, terms and conditions concerning such other interconnection, service or network element and any other rates, terms and conditions that are interrelated or were negotiated in exchange for or in conjunction with the interconnection, service or network element being adopted. The adopted interconnection, service, or network element and agreement shall apply to the same states as such other agreement and for the identical term of such other agreement.

16.2 If ACCESS Integrated changes its name or makes changes to its company structure or identity due to a merger, acquisition, transfer or any other reason, it is the responsibility of ACCESS Integrated to notify BellSouth of said change and request that an amendment to this Agreement, if necessary, be executed to reflect said change.

16.3 No modification, amendment, supplement to, or waiver of the Agreement or any of its provisions shall be effective and binding upon the Parties unless it is made in writing and duly signed by the Parties.

16.4 Execution of this Agreement by either Party does not confirm or infer that the executing Party agrees with any decision(s) issued pursuant to the Telecommunications Act of 1996 and the consequences of those decisions on specific language in this Agreement. Neither Party waives its rights to appeal or otherwise challenge any such decision(s) and each Party reserves all of its rights to

pursue any and all legal and/or equitable remedies, including appeals of any such decision(s).

16.5 In the event that any effective legislative, regulatory, judicial or other legal action materially affects any material terms of this Agreement, or the ability of ACCESS Integrated or BellSouth to perform any material terms of this Agreement, ACCESS Integrated or BellSouth may, on thirty (30) days' written notice require that such terms be renegotiated, and the Parties shall renegotiate in good faith such mutually acceptable new terms as may be required. In the event that such new terms are not renegotiated within ninety (90) days after such notice, the Dispute shall be referred to the Dispute Resolution procedure set forth in Section 12.

16.6 If any provision of this Agreement, or the application of such provision to either Party or circumstance, shall be held invalid, the remainder of the Agreement, or the application of any such provision to the Parties or circumstances other than those to which it is held invalid, shall not be effective thereby, provided that the Parties shall attempt to reformulate such invalid provision to give effect to such portions thereof as may be valid without defeating the intent of such provision.

17. Waivers

A failure or delay of either Party to enforce any of the provisions hereof, to exercise any option which is herein provided, or to require performance of any of the provisions hereof shall in no way be construed to be a waiver of such provisions or options, and each Party, notwithstanding such failure, shall have the right thereafter to insist upon the specific performance of any and all of the provisions of this Agreement.

18. Governing Law

This Agreement shall be governed by, and construed and enforced in accordance with, the laws of the State of Georgia, without regard to its conflict of laws principles.

19. Arm's Length Negotiations

This Agreement was executed after arm's length negotiations between the undersigned Parties and reflects the conclusion of the undersigned that this Agreement is in the best interests of all Parties.

20. Notices

20.1 Every notice, consent, approval, or other communications required or contemplated by this Agreement shall be in writing and shall be delivered in person or given by postage prepaid mail, address to:

BellSouth Telecommunications, Inc.

CLEC Account Team
9th Floor
600 North 19th Street
Birmingham, AL 35203

and

General Attorney - COU
Suite 4300
675 W. Peachtree St.
Atlanta, GA 30375

ACCESS Integrated Networks, Inc.

Tom Wright
4885 Riverside Drive, Suite 202
Macon, GA 31210
Telephone: 912-476-7970
Fax: 912-476-7997

or at such other address as the intended recipient previously shall have designated by written notice to the other Party.

20.2 Where specifically required, notices shall be by certified or registered mail. Unless otherwise provided in this Agreement, notice by mail shall be effective on the date it is officially recorded as delivered by return receipt or equivalent, and in the absence of such record of delivery, it shall be presumed to have been delivered the fifth day, or next business day after the fifth day, after it was deposited in the mails.

20.3 BellSouth shall provide ACCESS Integrated notice via Internet posting of price changes and of changes to the terms and conditions of services available for resale.

21. Rule of Construction

No rule of construction requiring interpretation against the drafting Party hereof shall apply in the interpretation of this Agreement.

22. Headings of No Force or Effect

The headings of Articles and Sections of this Agreement are for convenience of reference only, and shall in no way define, modify or restrict the meaning or interpretation of the terms or provisions of this Agreement.

23. Multiple Counterparts

This Agreement may be executed multiple counterparts, each of which shall be deemed an original, but all of which shall together constitute but one and the same document.

24. Implementation of Agreement

If ACCESS Integrated is a facilities based provider or a facilities based and resale provider, this section shall apply. Within 60 days of the execution of this Agreement, the Parties will adopt a schedule for the implementation of the Agreement. The schedule shall state with specificity time frames for submission of including but not limited to, network design, interconnection points, collocation arrangement requests, pre-sales testing and full operational time frames for the business and residential markets. An implementation template to be used for the implementation schedule is contained in Attachment 10 of this Agreement.

25. Filing of Agreement

Upon execution of this Agreement it shall be filed with the appropriate state regulatory agency pursuant to the requirements of Section 252 of the Act. If the regulatory agency imposes any filing or public interest notice fees regarding the filing or approval of the Agreement, ACCESS Integrated shall be responsible for publishing the required notice and the publication and/or notice costs shall be borne by ACCESS Integrated.

26. Entire Agreement

This Agreement and its Attachments, incorporated herein by this reference, sets forth the entire understanding and supersedes prior Agreements between the Parties relating to the subject matter contained herein and merges all prior discussions between them, and neither Party shall be bound by any definition, condition, provision, representation, warranty, covenant or promise other than as expressly stated in this Agreement or as is contemporaneously or subsequently set forth in writing and executed by a duly authorized officer or representative of the Party to be bound thereby.

This Agreement may include attachments with provisions for the following services:

Network Elements and Other Services
Local Interconnection
Resale
Collocation

The following services are included as options for purchase by ACCESS Integrated. ACCESS Integrated shall elect said services by written request to its Account Manager if applicable.
Optional Daily Usage File (ODUF)
Enhanced Optional Daily Usage File (EODUF)
Access Daily Usage File (ADUF)
Line Information Database (LIDB) Storage
Centralized Message Distribution Service (CMDS)
Calling Name (CNAM)

IN WITNESS WHEREOF, the Parties have executed this Agreement the day and year above first written.

BellSouth Telecommunications, Inc.	**ACCESS Integrated Networks, Inc.**
Signature	Signature
Jerry Hendrix	William T. Wright
Name	Name
Sr. Director – Interconnection Services	President
Title	Title
5/4/00	May 3, 2000
Date	Date

Definitions

Affiliate is defined as a person that (directly or indirectly) owns or controls, is owned or controlled by, or is under common ownership or control with, another person. For purposes of this paragraph, the term "own" means to own an equity interest (or equivalent thereof) of more than 10 percent.

Centralized Message Distribution System is the Telcordia (formerly BellCore) administered national system, based in Kansas City, Missouri, used to exchange Exchange Message Interface (EMI) formatted data among host companies.

Commission is defined as the appropriate regulatory agency in each of BellSouth's nine state region, Alabama, Florida, Georgia, Kentucky, Louisiana, Mississippi, North Carolina, South Carolina, and Tennessee.

Daily Usage File is the compilation of messages or copies of messages in standard Exchange Message Interface (EMI) format exchanged from BellSouth to a CLEC.

Exchange Message Interface is the nationally administered standard format for the exchange of data among the Exchange Carriers within the telecommunications industry.

Information Service means the offering of a capability for generating, acquiring, storing, transforming, processing, retrieving, utilizing, or making available information via telecommunications, and includes electronic publishing, but does not include any use of any such capability for the management, control, or operation of a telecommunications system or the management of a telecommunications service.

Intercompany Settlements (ICS) is the revenue associated with charges billed by a company other than the company in whose service area such charges were incurred. ICS on a national level includes third number and credit card calls and is administered by Telcordia (formerly BellCore)'s Calling Card and Third Number Settlement System (CATS). Included is traffic that originates in one Regional Bell Operating Company's (RBOC) territory and bills in another RBOC's territory.

Intermediary function is defined as the delivery of traffic from ACCESS Integrated; a CLEC other than ACCESS Integrated or another telecommunications carrier through the network of BellSouth or ACCESS Integrated to an end user of ACCESS Integrated; a CLEC other than ACCESS Integrated or another telecommunications carrier.

Local Interconnection is defined as 1) the delivery of local traffic to be terminated on each Party's local network so that end users of either Party have the ability to reach end users of the other Party without the use of any access code or substantial delay in the processing of the call; 2) the LEC network features, functions, and capabilities set forth in this Agreement; and 3) Service Provider Number Portability sometimes referred to as temporary telephone number portability to be implemented pursuant to the terms of this Agreement.

Local Traffic is defined as any telephone call that originates in one exchange and terminates in either the same exchange, or other local calling area associated with the originating exchange as defined and specified in Section A3 of BellSouth's General Subscriber Service Tariff. As clarification of this definition and for reciprocal transport and termination compensation, Local Traffic does not include traffic that originates from or is directed to or through an enhanced service provider or information service provider. As further clarification, Local Traffic does not include calls that do not transmit information of the user's choosing. In any event, neither Party will pay reciprocal compensation to the other if the "traffic" to which such reciprocal compensation would otherwise apply was generated, in whole or in part, for the purpose of creating an obligation on the part of the originating carrier to pay reciprocal compensation for such traffic.

Message Distribution is routing determination and subsequent delivery of message data from one company to another. Also included is the interface function with CMDS, where appropriate.

Multiple Exchange Carrier Access Billing ("MECAB") means the document prepared by the Billing Committee of the Ordering and Billing Forum ("OBF:), which functions under the auspices of the Carrier Liaison Committee of the Alliance for Telecommunications Industry Solutions ("ATIS") and by Telcordia (formerly BellCore) as Special Report SR-BDS-000983, Containing the recommended guidelines for the billing of Exchange Service access provided by two or more LECs and/or CLECs or by one LEC in two or more states within a single LATA.

Network Element is defined to mean a facility or equipment used in the provision of a telecommunications service. Such term may include, but is not limited to, features, functions, and capabilities that are provided by means of such facility or equipment, including but not limited to, subscriber numbers, databases, signaling systems, and information sufficient for billing and collection or used in the transmission, routing, or other provision of a telecommunications service. BellSouth offers access to the Network Elements, unbundled loops; network interface device; sub-loop elements; local switching; transport; tandem switching; operator systems; signaling; access to call-related databases; dark fiber as set forth in Attachment 2 of this Agreement.

Non-Intercompany Settlement System (NICS) is the Telcordia (formerly BellCore) system that calculates non-intercompany settlements amounts due from one company to another within the same RBOC region. It includes credit card, third number and collect messages.

Percent of Interstate Usage (PIU) is defined as a factor to be applied to terminating access services minutes of use to obtain those minutes that should be rated as interstate access services minutes of use. The numerator includes all interstate "non-intermediary" minutes of use, including interstate minutes of use that are forwarded due to service provider number portability less any interstate minutes of use for Terminating Party Pays services, such as 800 Services. The denominator includes all "non-intermediary", local, interstate, intrastate, toll and access minutes of use adjusted for service provider number portability less all minutes attributable to terminating Party pays services.

Percent Local Usage (PLU) is defined as a factor to be applied to intrastate terminating minutes of use. The numerator shall include all "non-intermediary" local minutes of use adjusted for those minutes of use that only apply local due to Service Provider Number Portability. The denominator is the total intrastate minutes of use including local, intrastate toll, and access, adjusted for Service Provider Number Portability less intrastate terminating Party pays minutes of use.

Revenue Accounting Office (RAO) Status Company is a local exchange company/alternate local exchange company that has been assigned a unique RAO code. Message data exchanged among RAO status companies is grouped (i.e. packed) according to From/To/Bill RAO combinations.

Service Control Points ("SCPs") are defined as databases that store information and have the ability to manipulate data required to offer particular services.

Signal Transfer Points ("STPs") are signaling message switches that interconnect Signaling Links to route signaling messages between switches and databases. STPs enable the exchange of Signaling System 7 ("SS7") messages between switching elements, database elements and STPs. STPs provide access to various BellSouth and third party network elements such as local switching and databases.

Signaling links are dedicated transmission paths carrying signaling messages between carrier switches and signaling networks. Signal Link Transport is a set of two or four dedicated 56 kbps transmission paths between ACCESS Integrated designated Signaling Points of Interconnection that provide a diverse transmission path and cross connect to a BellSouth Signal Transfer Point.

Telecommunications means the transmission, between or among points specified by the user, of information of the user's choosing, without change in the form or content of the information as sent and received.

Telecommunications Service means the offering of telecommunications for a fee directly to the public, or to such classes of users as to be effectively available directly to the public, regardless of the facilities used.

Telecommunications Act of 1996 ("Act") means Public Law 104-104 of the United States Congress effective February 8, 1996. The Act amended the Communications Act of 1934 (47, U.S.C. Section 1 et. seq.).

Attachment 1

Resale

TABLE OF CONTENTS

1. Discount Rates..... 3

2. Definition of Terms..... 3

3. General Provisions..... 4

4. Bellsouth's Provision of Services To ACCESS Integrated..... 8

5. Maintenance of Services..... 9

6. Establishment of Service..... 10

7. Payment and Billing Arrangements..... 12

8. Discontinuance of Service..... 14

9. Line Information Database (LIDB)..... 15

10. RAO Hosting..... 15

11. Optional Daily Usage File (ODUF)..... 16

12. Enhanced Optional Daily Usage File (EODUF)..... 17

Exhibit A – Applicable Discounts/OSS Rates.....17

Exhibit B – Resale Restrictions..... 20

Exhibit C – Line Information Database (LIDB) Storage Agreement..... .22

Exhibit D – CMDS/ROA Hosting..... .28

Exhibit E – Optional Daily Usage File ODUF)..... 33

Exhibit F – Enhanced Option Daily Usage File (EODUF)..... 37

Exhibit G – ODUF/EODUF/CMDS Rates.....Rate Table

RESALE

1. Discount Rates

The discount rates applied to ACCESS Integrated purchases of BellSouth Telecommunications Services for the purpose of resale shall be as set forth in Exhibit A. Such discount shall reflect the costs avoided by BellSouth when selling a service for wholesale purposes.

2. Definition of Terms

2.1 COMPETITIVE LOCAL EXCHANGE COMPANY (CLEC) means a telephone company certificated by the public service commissions of BellSouth's franchised area to provide local exchange service within BellSouth's franchised area.

2.2 CUSTOMER OF RECORD means the entity responsible for placing application for service; requesting additions, rearrangements, maintenance or discontinuance of service; payment in full of charges incurred such as non-recurring, monthly recurring, toll, directory assistance, etc.

2.3 DEPOSIT means assurance provided by a customer in the form of cash, surety bond or bank letter of credit to be held by BellSouth.

2.4 END USER means the ultimate user of the telecommunications services.

2.5 END USER CUSTOMER LOCATION means the physical location of the premises where an end user makes use of the telecommunications services.

2.6 NEW SERVICES means functions, features or capabilities that are not currently offered by BellSouth. This includes packaging of existing services or combining a new function, feature or capability with an existing service.

2.7 RESALE means an activity wherein a certificated CLEC, such as ACCESS Integrated subscribes to the telecommunications services of BellSouth and then offers those telecommunications services to the public

2.8 RESALE SERVICE AREA means the area, as defined in a public service commission approved certificate of operation, within which a CLEC, such as ACCESS Integrated, may offer resold local exchange telecommunications service.

3. General Provisions

3.1 ACCESS Integrated may resell the tariffed local exchange and toll telecommunications services of BellSouth contained in the General Subscriber Service Tariff and Private Line Service Tariff subject to the terms, and conditions specifically set forth herein. Notwithstanding the foregoing, the exclusions and limitations on services available for resale will be as set forth in Exhibit B**,** attached hereto and incorporated herein by this reference**.**

3.2 All of the negotiated rates, terms and conditions set forth in this Attachment pertain to the resale of BellSouth's retail telecommunications services and other services specified in this Attachment. BellSouth shall make available telecommunications services for resale at the discount rates set forth in Exhibit A to this Agreement and subject to the exclusions and limitations set forth in Exhibit B to this Agreement. BellSouth does not however waive its rights to appeal or otherwise challenge any decision regarding resale that resulted in the discount rates contained in Exhibit A or the exclusions and limitations contained in Exhibit B. BellSouth reserves the right to pursue any and all legal and/or equitable remedies, including appeals of any decisions. If such appeals or challenges result in changes in the discount rates or exclusions and limitations, the parties agree that appropriate modifications to this Agreement will be made promptly to make its terms consistent with the outcome of the appeal**.**

3.3 ACCESS Integrated may purchase resale services from BellSouth for their own use in operating their business. The resale discount will apply to those services under the following conditions:

3.3.1 ACCESS Integrated must resell services to other end users.

3.3.2 ACCESS Integrated must order services through resale interfaces, i.e., the Local Carrier Service Center (LCSC) and/or appropriate Resale Account Teams pursuant to Section 3 of the General Terms and Conditions.

3.3.3 ACCESS Integrated cannot be a competitive local exchange telecommunications company for the single purpose of selling to themselves.

3.4 The provision of services by BellSouth to ACCESS Integrated does not constitute a joint undertaking for the furnishing of any service.

3.5 ACCESS Integrated will be the customer of record for all services purchased from BellSouth. Except as specified herein, BellSouth will take orders from, bill and expect payment from ACCESS Integrated for said services.

3.6 ACCESS Integrated will be BellSouth's single point of contact for all services purchased pursuant to this Agreement. BellSouth shall have no contact with the end user except to the extent provided for herein.

3.7 BellSouth will continue to bill the end user for any services that the end user specifies it wishes to receive directly from BellSouth.

3.8 BellSouth maintains the right to serve directly any end user within the service area of ACCESS Integrated. BellSouth will continue to directly market its own telecommunications products and services and in doing so may establish independent relationships with end users of ACCESS Integrated.

3.9 Neither Party shall interfere with the right of any person or entity to obtain service directly from the other Party.

3.10 Current telephone numbers may normally be retained by the end user and are assigned to the service furnished. However, neither Party nor the end user has a property right to the telephone number or any other call number designation associated with services furnished by BellSouth, and no right to the continuance of service through any particular central office. BellSouth reserves the right to change such numbers, or the central office designation associated with such numbers, or both, whenever BellSouth deems it necessary to do so in the conduct of its business and in accordance with BellSouth practices and procedures on a nondiscriminatory basis.

3.11 For the purpose of the resale of BellSouth's telecommunications services by ACCESS Integrated, BellSouth will provide ACCESS Integrated with an on line access to telephone numbers for reservation on a first come first serve basis. Such reservations of telephone numbers, on a pre-ordering basis shall be for a period of nine (9) days. ACCESS Integrated acknowledges that there may be instances where there is a shortage of telephone numbers in a particular Common Language Location Identifier Code (CLLIC) and in such instances BellSouth may request that ACCESS Integrated cancel its reservations of numbers. ACCESS Integrated shall comply with such request.

3.12 Further, upon ACCESS Integrated's request, and for the purpose of the resale of BellSouth's telecommunications services by ACCESS Integrated, BellSouth will reserve up to 100 telephone numbers per CLLIC, for ACCESS Integrated's sole use. Such telephone number reservations shall be valid for ninety (90) days from the

reservation date. ACCESS Integrated acknowledges that there may be instances where there is a shortage of telephone numbers in a particular CLLIC and in such instances BellSouth shall use its best efforts to reserve for a ninety (90) day period a sufficient quantity of ACCESS Integrated's reasonable need in that particular CLLIC.

3.13 Service is furnished subject to the condition that it will not be used for any unlawful purpose.

3.14 Service will be discontinued if any law enforcement agency advises that the service being used is in violation of the law.

3.15 BellSouth can refuse service when it has grounds to believe that service will be used in violation of the law.

3.16 BellSouth accepts no responsibility to any person for any unlawful act committed by ACCESS Integrated or its end users as part of providing service to ACCESS Integrated for purposes of resale or otherwise.

3.17 BellSouth will cooperate fully with law enforcement agencies with subpoenas and court orders for assistance with BellSouth's end users, pursuant to Section 7 of the General Terms and Conditions

3.18 The characteristics and methods of operation of any circuits, facilities or equipment provided by any person or entity other than BellSouth shall not:

3.18.1 Interfere with or impair service over any facilities of BellSouth, its affiliates, or its connecting and concurring carriers involved in its service; or

3.18.2 Cause damage to BellSouth's plant;

3.18.3 Impair the privacy of any communications; or

3.18.4 Create hazards to any BellSouth employees or the public.

3.19 If ACCESS Integrated utilizes a BellSouth resold telecommunications service in a manner other than which the service was originally intended as described in BellSouth's retail tariffs, ACCESS Integrated has the responsibility to notify BellSouth. BellSouth will only provision and maintain said service consistent with the terms and conditions of the tariff describing said service.

3.20 Facilities and/or equipment utilized by BellSouth to provide service to ACCESS Integrated remain the property of BellSouth.

3.21 White page directory listings will be provided in accordance with Section 5 of the General Terms and Conditions.

3.22 BellSouth provides electronic access to customer record information. Access is provided through the Local Exchange Navigation System (LENS) and the Telecommunications Access Gateway (TAG). Customer Record Information includes but is not limited to, customer specific information in CRIS and RSAG. In addition, ACCESS Integrated shall provide to BellSouth access to customer record information including electronic access where available. Otherwise, upon request by BellSouth ACCESS Integrated shall provide paper copies of customer record information within a reasonable period of time by BellSouth. Customer Record Information is equivalent to but not limited to the type of customer specific information contained in CRIS and RSAG. The Parties agree not to view, copy, or otherwise obtain access to the customer record information of any customer without that customer's permission, and further agrees that ACCESS Integrated and BellSouth will obtain access to customer record information only in strict compliance with applicable laws, rules, or regulations of the State in which the service is provided.

3.23 All costs incurred by BellSouth to develop and implement operational interfaces shall be recovered from Resellers who utilize the services. Charges for use of Operational Support Systems (OSS) shall be as set forth in Exhibit A of this Attachment.

3.24 Where available to BellSouth's end users, BellSouth shall provide the following telecommunications services at a discount to allow for voice mail services**:**

- Simplified Message Desk Interface - Enhanced ("SMDI-E")
- Simplified Message Desk Interface ("SMDI")
- Message Waiting Indicator ("MWI") stutter dialtone and message waiting light feature capabilities
- Call Forward on Busy ("CF/B")
- Call Forward Don't Answer ("CF/DA")

Further, BellSouth messaging services set forth in BellSouth's Messaging Service Information Package shall be made available for resale without the wholesale discount.

3.24.1 BellSouth shall provide branding for, or shall unbrand, voice mail services to ACCESS Integrated per the Bona Fide Request/New Business Request process as set forth in Section 6 of the General Terms and Conditions.

3.25 BellSouth's Inside Wire Maintenance Service Plans may be made available for resale at rates, terms and conditions as set forth by BellSouth and without the wholesale discount.

3.26 If ACCESS Integrated requires a special assembly ACCESS Integrated agrees to pay the costs incurred by BellSouth for providing the requested special assembly. The costs will be provided to ACCESS Integrated prior to providing the service. Such costs could include both recurring and non-recurring charges and shall exclude any cost attributable to any marketing, billing collection or other costs that will be avoided by BellSouth in providing service to ACCESS Integrated.

3.27 Recovery of charges associated with implementing Number Portability through monthly charges assessed to end users has been authorized by the FCC. This end user line charge will be billed to Resellers of BellSouth's telecommunications services and will be as filed in FCC No. 1. This charge is not discounted.

3.28 BellSouth shall provide 911/E911 for ACCESS Integrated customers in the same manner that it is provided to BellSouth customers. BellSouth shall provide and validate ACCESS Integrated customer information to the PSAP. BellSouth shall use its service order process to update and maintain, on the same schedule that it uses for its customers, the ACCESS Integrated customer service information in the ALI/DMS (Automatic Location Identification/Location Information) databases used to support 911/E911 services.

3.29 Pursuant to 47 CFR Section 51.617, BellSouth will bill ACCESS Integrated end users common line charges identical to the end user common line charges BellSouth bills its end users.

4. BellSouth's Provision of Services to ACCESS Integrated

4.1 ACCESS Integrated agrees that its resale of BellSouth services shall be as follows:

4.1.1 The resale of telecommunications services shall be limited to users and uses conforming to the class of service restrictions.

4.1.2 Hotel and Hospital PBX services are the only telecommunications services available for resale to Hotel/Motel and Hospital end users, respectively. Similarly, Access Line Service for Customer Provided Coin Telephones is the only local service available for resale to Independent Payphone Provider (IPP) customers. Shared Tenant Service customers can only be sold those local exchange access services available in BellSouth's A23 Shared Tenant Service Tariff in the states of Florida, Georgia, North

Carolina and South Carolina, and in A27 in the states of Alabama, Kentucky, Louisiana, Mississippi and Tennessee.

4.1.3 BellSouth reserves the right to periodically audit services purchased by ACCESS Integrated to establish authenticity of use. Such audit shall not occur more than once in a calendar year. ACCESS Integrated shall make any and all records and data available to BellSouth or BellSouth's auditors on a reasonable basis. BellSouth shall bear the cost of said audit.

4.2 Resold services can only be used in the same manner as specified in BellSouth's Tariffs. Resold services are subject to the same terms and conditions as are specified for such services when furnished to an individual end user of BellSouth in the appropriate section of BellSouth's Tariffs. Specific tariff features (e.g. a usage allowance per month), shall not be aggregated across multiple resold services.

4.3 ACCESS Integrated may resell services only within the specific resale service area as defined in its certificate.

4.4 Telephone numbers transmitted via any resold service feature are intended solely for the use of the end user of the feature. Resale of this information is prohibited.

5. Maintenance of Services

5.1 ACCESS Integrated will adopt and adhere to the standards contained in the applicable CLEC Work Center Operational Understanding Agreement regarding maintenance and installation of service**.**

5.2 Services resold pursuant to this Attachment and BellSouth's General Subscriber Service Tariff and Private Line Service Tariff and facilities and equipment provided by BellSouth shall be maintained by BellSouth.

5.3 ACCESS Integrated or its end users may not rearrange, move, disconnect, remove or attempt to repair any facilities owned by BellSouth, other than by connection or disconnection to any interface means used, except with the written consent of BellSouth.

5.4 ACCESS Integrated accepts responsibility to notify BellSouth of situations that arise that may result in a service problem.

5.5 ACCESS Integrated will be BellSouth's single point of contact for all repair calls on behalf of ACCESS Integrated's end users. The parties agree to provide one another with toll-free contact numbers for such purposes.

5.6 ACCESS Integrated will contact the appropriate repair centers in accordance with procedures established by BellSouth.

5.7 For all repair requests, ACCESS Integrated accepts responsibility for adhering to BellSouth's prescreening guidelines prior to referring the trouble to BellSouth.

5.8 BellSouth will bill ACCESS Integrated for handling troubles that are found not to be in BellSouth's network pursuant to its standard time and material charges. The standard time and material charges will be no more than what BellSouth charges to its retail customers for the same services.

5.9 BellSouth reserves the right to contact ACCESS Integrated's end users, if deemed necessary, for maintenance purposes.

6. Establishment of Service

6.1 After receiving certification as a local exchange company from the appropriate regulatory agency, ACCESS Integrated will provide the appropriate BellSouth service center the necessary documentation to enable BellSouth to establish a master account for ACCESS Integrated's resold services. Such documentation shall include the Application for Master Account, proof of authority to provide telecommunications services, an Operating Company Number ("OCN") assigned by the National Exchange Carriers Association ("NECA") and a tax exemption certificate, if applicable. When necessary deposit requirements are met, BellSouth will begin taking orders for the resale of service.

6.2 Service orders will be in a standard format designated by BellSouth.

6.3 When notification is received from ACCESS Integrated that a current end user of BellSouth will subscribe to ACCESS Integrated's service, standard service order intervals for the appropriate class of service will apply.

6.4 BellSouth will not require end user confirmation prior to establishing service for ACCESS Integrated's end user customer. ACCESS Integrated must, however, be able to demonstrate end user authorization upon request.

6.5 ACCESS Integrated will be the single point of contact with BellSouth for all subsequent ordering activity resulting in additions or changes to resold services except that BellSouth will accept a request directly from the end user for conversion of the end user's service from ACCESS Integrated to BellSouth or will accept a request from another CLEC for conversion of the end user's service from ACCESS

Integrated to the other LEC. BellSouth will notify ACCESS Integrated that such a request has been processed.

6.6 If BellSouth determines that an unauthorized change in local service to ACCESS Integrated has occurred, BellSouth will reestablish service with the appropriate local service provider and will assess ACCESS Integrated as the CLEC initiating the unauthorized change, the unauthorized change charge described in F.C.C. Tariff No. 1, Section 13 or applicable state tariff. Appropriate nonrecurring charges, as set forth in Section A4 of the General Subscriber Service Tariff, will also be assessed to ACCESS Integrated. These charges can be adjusted if ACCESS Integrated provides satisfactory proof of authorization.

6.7 In order to safeguard its interest, BellSouth reserves the right to secure the account with a suitable form of security deposit, unless satisfactory credit has already been established.

6.7.1 Such security deposit shall take the form of an irrevocable Letter of Credit or other forms of security acceptable to BellSouth. Any such security deposit may be held during the continuance of the service as security for the payment of any and all amounts accruing for the service.

6.7.2 If a security deposit is required, such security deposit shall be made prior to the inauguration of service.

6.7.3 Such security deposit may not exceed two months' estimated billing.

6.7.4 The fact that a security deposit has been made in no way relieves ACCESS Integrated from complying with BellSouth's regulations as to advance payments and the prompt payment of bills on presentation nor does it constitute a waiver or modification of the regular practices of BellSouth providing for the discontinuance of service for non-payment of any sums due BellSouth.

6.7.5 BellSouth reserves the right to increase the security deposit requirements when, in its sole judgment, circumstances so warrant and/or gross monthly billing has increased beyond the level initially used to determine the security deposit.

6.7.6 In the event that ACCESS Integrated defaults on its account, service to ACCESS Integrated will be terminated and any security deposits held will be applied to its account.

6.7.7 Interest on a security deposit shall accrue and be paid in accordance with the terms in the appropriate BellSouth tariff.

7. Payment And Billing Arrangements

7.1 Prior to submitting orders to BellSouth for local service, a master account must be established for ACCESS Integrated. ACCESS Integrated is required to provide the following before a master account is established: proof of PSC/PUC certification, the Application for Master Account, an Operating Company Number ("OCN") assigned by the National Exchange Carriers Association ("NECA") and a tax exemption certificate, if applicable.

7.2 BellSouth shall bill ACCESS Integrated on a current basis all applicable charges and credits.

7.3 Payment of all charges will be the responsibility of ACCESS Integrated. ACCESS Integrated shall make payment to BellSouth for all services billed. BellSouth is not responsible for payments not received by ACCESS Integrated from ACCESS Integrated's end user. BellSouth will not become involved in billing disputes that may arise between ACCESS Integrated and its end user. Payments made to BellSouth as payment on account will be credited to an accounts receivable master account and not to an end user's account.

7.4 BellSouth will render bills each month on established bill days for each of ACCESS Integrated's accounts.

7.5 BellSouth will bill ACCESS Integrated in advance charges for all services to be provided during the ensuing billing period except charges associated with service usage, which will be billed in arrears. Charges will be calculated on an individual end user account level, including, if applicable, any charge for usage or usage allowances. BellSouth will also bill ACCESS Integrated, and ACCESS Integrated will be responsible for and remit to BellSouth, all charges applicable to resold services including but not limited to 911 and E911 charges, telecommunications relay charges (TRS), and franchise fees.

7.6 The payment will be due by the next bill date (i.e., same date in the following month as the bill date) and is payable in immediately available funds. Payment is considered to have been made when received by BellSouth.

7.6.1 If the payment due date falls on a Sunday or on a Holiday which is observed on a Monday, the payment due date shall be the first non-Holiday day following such Sunday or Holiday. If the payment due date falls on a Saturday or on a Holiday which is observed on Tuesday, Wednesday, Thursday, or Friday, the payment due date shall be the last non-Holiday day preceding such Saturday or Holiday. If payment is not

received by the payment due date, a late payment penalty, as set forth in section 7.8 following, shall apply.

7.6.2 If ACCESS Integrated requests multiple billing media or additional copies of bills, BellSouth will provide these at an appropriate charge to ACCESS Integrated.

7.6.3 Billing Disputes

7.6.3.1 Each Party agrees to notify the other Party upon the discovery of a billing dispute. In the event of a billing dispute, the Parties will endeavor to resolve the dispute within sixty (60) calendar days of the Bill Date on which such disputed charges appear. Resolution of the dispute is expected to occur at the first level of management resulting in a recommendation for settlement of the dispute and closure of a specific billing period. If the issues are not resolved within the allotted time frame, the following resolution procedure will begin:

7.6.3.2 If the dispute is not resolved within sixty (60) days of the Bill Date, the dispute will be escalated to the second level of management for each of the respective Parties for resolution. If the dispute is not resolved within ninety (90) days of the Bill Date, the dispute will be escalated to the third level of management for each of the respective Parties for resolution

7.6.3.3 If the dispute is not resolved within one hundred and twenty (120) days of the Bill Date, the dispute will be escalated to the fourth level of management for each of the respective Parties for resolution.

7.6.3.4 If a Party disputes a charge and does not pay such charge by the payment due date, such charges shall be subject to late payment charges as set forth in the Late Payment Charges provision of this Attachment. If a Party disputes charges and the dispute is resolved in favor of such Party, the other Party shall credit the bill of the disputing Party for the amount of the disputed charges along with any late payment charges assessed no later than the second Bill Date after the resolution of the dispute. Accordingly, if a Party disputes charges and the dispute is resolved in favor of the other Party, the disputing Party shall pay the other Party the amount of the disputed charges and any associated late payment charges assessed no later than the second bill payment due date after the resolution of the dispute. BellSouth shall only assess interest on previously assessed late payment charges in a state where it has authority pursuant to its tariffs.

7.7 Upon proof of tax exempt certification from ACCESS Integrated, the total amount billed to ACCESS Integrated will not include any taxes due from the end user to reflect the tax exempt certification and local tax laws. ACCESS Integrated will be

solely responsible for the computation, tracking, reporting, and payment of taxes applicable to ACCESS Integrated's end user.

7.8 If any portion of the payment is received by BellSouth after the payment due date as set forth preceding, or if any portion of the payment is received by BellSouth in funds that are not immediately available to BellSouth, then a late payment penalty shall be due to BellSouth. The late payment penalty shall be the portion of the payment not received by the payment due date times a late factor and will be applied on a per bill basis. The late factor shall be as set forth in Section A2 of the General Subscriber Services Tariff and Section B2 of the Private Line Service Tariff. ACCESS Integrated will be charged a fee for all returned checks as set forth in Section to A2 of the General Subscriber Services Tariff or in applicable state law.

7.9 Any switched access charges associated with interexchange carrier access to the resold local exchange lines will be billed by, and due to, BellSouth. No additional charges are to be assessed to ACCESS Integrated

7.10 BellSouth will not perform billing and collection services for ACCESS Integrated as a result of the execution of this Agreement. All requests for billing services should be referred to the appropriate entity or operational group within BellSouth.

7.11 In general, BellSouth will not become involved in disputes between ACCESS Integrated and ACCESS Integrated's end user customers over resold services. If a dispute does arise that cannot be settled without the involvement of BellSouth, ACCESS Integrated shall contact the designated Service Center for resolution. BellSouth will make every effort to assist in the resolution of the dispute and will work with ACCESS Integrated to resolve the matter in as timely a manner as possible. ACCESS Integrated may be required to submit documentation to substantiate the claim.

8. Discontinuance of Service

8.1 The procedures for discontinuing service to an end user are as follows:

8.1.1 Where possible, BellSouth will deny service to ACCESS Integrated's end user on behalf of, and at the request of, ACCESS Integrated. Upon restoration of the end user's service, restoral charges will apply and will be the responsibility of ACCESS Integrated.

8.1.2 At the request of ACCESS Integrated, BellSouth will disconnect a ACCESS Integrated end user customer.

8.1.3 All requests by ACCESS Integrated for denial or disconnection of an end user for nonpayment must be in writing.

8.1.4 ACCESS Integrated will be made solely responsible for notifying the end user of the proposed disconnection of the service.

8.1.5 BellSouth will continue to process calls made to the Annoyance Call Center and will advise ACCESS Integrated when it is determined that annoyance calls are originated from one of their end user's locations. BellSouth shall be indemnified, defended and held harmless by ACCESS Integrated and/or the end user against any claim, loss or damage arising from providing this information to ACCESS Integrated. It is the responsibility of ACCESS Integrated to take the corrective action necessary with its end users who make annoying calls. Failure to do so will result in BellSouth's disconnecting the end user's service.

8.1.6 BellSouth may disconnect and reuse facilities when the facility is in a denied state and BellSouth has received an order to establish new service or transfer of service from an end user or an end user's CLEC at the same address served by the denied facility.

8.2 The procedures for discontinuing service to ACCESS Integrated are as follows:

8.2.1 BellSouth reserves the right to suspend or terminate service for nonpayment or in the event of prohibited, unlawful or improper use of the facilities or service, abuse of the facilities, or any other violation or noncompliance by ACCESS Integrated of the rules and regulations of BellSouth's Tariffs.

8.2.2 If payment of account is not received by the bill day in the month after the original bill day, BellSouth may provide written notice to ACCESS Integrated, that additional applications for service will be refused and that any pending orders for service will not be completed if payment is not received by the fifteenth day following the date of the notice. In addition BellSouth may, at the same time, give thirty days notice to the person designated by ACCESS Integrated to receive notices of noncompliance, and discontinue the provision of existing services to ACCESS Integrated at any time thereafter.

8.2.3 In the case of such discontinuance, all billed charges, as well as applicable termination charges, shall become due.

8.2.4 If BellSouth does not discontinue the provision of the services involved on the date specified in the thirty days notice and ACCESS Integrated's noncompliance continues, nothing contained herein shall preclude BellSouth's right to discontinue the provision of the services to ACCESS Integrated without further notice.

8.2.5 If payment is not received or arrangements made for payment by the date given in the written notification, ACCESS Integrated's services will be discontinued. Upon discontinuance of service on a ACCESS Integrated's account, service to ACCESS Integrated's end users will be denied. BellSouth will also reestablish service at the request of the end user or ACCESS Integrated upon payment of the appropriate connection fee and subject to BellSouth's normal application procedures. ACCESS Integrated is solely responsible for notifying the end user of the proposed disconnection of the service.

8.2.6 If within fifteen days after an end user's service has been denied no contact has been made in reference to restoring service, the end user's service will be disconnected.

9. Line Information Database (LIDB)

9.1 BellSouth will store in its Line Information Database (LIDB) records relating to service only in the BellSouth region. The LIDB Storage Agreement is included in this Attachment as Exhibit C.

9.2 BellSouth will provide LIDB Storage upon written request to ACCESS Integrated Account Manager stating requested activation date.

10. RAO Hosting

10.1 The RAO Hosting Agreement is included in this Attachment as Exhibit D. Rates for BellSouth’s Centralized Message Distribution System (CMDS) are as set forth in Exhibit H of this Attachment.

10.2 BellSouth will provide RAO Hosting upon written request to its Account Manager stating requested activation date.

11. Optional Daily Usage File (ODUF)

11.1 The Optional Daily Usage File (ODUF) Agreement with terms and conditions is included in this Attachment as Exhibit E. Rates for ODUF are as set forth in Exhibit H of this Attachment.

11.2 BellSouth will provide Optional Daily Usage File (ODUF) service upon written request to its Account Manager stating requested activation date.

12. Enhanced Optional Daily Usage File (EODUF)

12.1 The Enhanced Optional Daily Usage File (EODUF) service Agreement with terms and conditions is included in this Attachment as Exhibit F. Rates for EODUF are as set forth in Exhibit H of this Attachment.

12.2 BellSouth will provide Enhanced Optional Daily Usage File (EODUF) service upon written request to its Account Manager stating requested activation date.

EXHIBIT A
Page 1

APPLICABLE DISCOUNTS

The telecommunications services available for purchase by ACCESS Integrated for the purposes of resale to ACCESS Integrated end users shall be available at the following discount off of the retail rate. If ACCESS Integrated cancels an order for telecommunications services for the purpose of resale, any costs incurred by BellSouth in conjunction with the provisioning of that order will be recovered in accordance with the applicable sections of the GSST and the PLST.

	DISCOUNT*		
STATE	**RESIDENCE**	**BUSINESS**	**CSAs*** **
ALABAMA	16.3%	16.3%	
FLORIDA	21.83%	16.81%	
GEORGIA	20.3%	17.3%	
KENTUCKY	16.79%	15.54%	
LOUISIANA	20.72%	20.72%	9.05%
MISSISSIPPI	15.75%	15.75%	
NORTH CAROLINA	21.5%	17.6%	
SOUTH CAROLINA	14.8%	14.8%	8.98%
TENNESSEE**	16%	16%	

* When a CLEC provides Resale service in a cross boundary area (areas that are part of the local serving area of another state's exchange) the rates, regulations and discounts for the tariffing state will apply. Billing will be from the serving state.

** In Tennessee, if a CLEC provides its own operator services and directory services, the discount shall be 21.56%. CLEC must provide written notification to BellSouth within 30 days prior to providing its own operator services and directory services to qualify for the higher discount rate of 21.56%.

*** Unless noted in this column, the discount for Business will be the applicable discount rate for CSAs.

EXHIBIT A
Page 2

OPERATIONAL SUPPORT SYSTEMS (OSS) RATES

BellSouth has developed and made available the following mechanized systems by which ACCESS Integrated may submit LSRs electronically.

LENS	Local Exchange Navigation System
EDI	Electronic Data Interchange
TAG	Telecommunications Access Gateway

LSRs submitted by means of one of these interactive interfaces will incur an OSS electronic ordering charge as specified in the Table below An individual LSR will be identified for billing purposes by its Purchase Order Number (PON). LSRs submitted by means other than one of these interactive interfaces (mail, fax, courier, etc.) will incur a manual order charge as specified in the table below:

OPERATIONAL SUPPORT SYSTEMS (OSS) RATES	**Electronic** **Per LSR received from the CLEC by one of the OSS interactive interfaces**	**Manual** **Per LSR received from the CLEC by means other than one of the OSS interactive interfaces**
OSS LSR Charge	**$3.50**	**$19.99**
USOC	**SOMEC**	**SOMAN**

Note: In addition to the OSS charges, applicable discounted service order and related discounted charges apply per the tariff.

Denial/Restoral OSS Charge

In the event ACCESS Integrated provides a list of customers to be denied and restored, rather than an LSR, each location on the list will require a separate PON and, therefore will be billed as one LSR per location.

Cancellation OSS Charge

ACCESS Integrated will incur an OSS charge for an accepted LSR that is later canceled by ACCESS Integrated.

Note: Supplements or clarifications to a previously billed LSR will not incur another OSS charge.

Threshold Billing Plan

EXHIBIT A
Page 3

The Parties agree that ACCESS Integrated will incur the mechanized rate for all LSRs, both mechanized and manual, if the percentage of mechanized LSRs to total LSRs meets or exceeds the threshold percentages shown below:

Year	Ratio: Mechanized/Total LSRs
2000	80%
2001	90%

The threshold plan will be discontinued in 2002.

BellSouth will track the total LSR volume for each CLEC for each quarter. At the end of that time period, a Percent Electronic LSR calculation will be made for that quarter based on the LSR data tracked in the LCSC. If this percentage exceeds the threshold volume, all of that CLECs' future manual LSRs will be billed at the mechanized LSR rate. To allow time for obtaining and analyzing the data and updating the billing system, this billing change will take place on the first day of the second month following the end of the quarter (e.g. May 1 for 1Q, Aug 1 for 2Q, etc.). There will be no adjustments to the amount billed for previously billed LSRs.

Exclusions and Limitations
On Services Available for Resale

	Type of Service	AL		FL		GA		KY		LA		MS		NC		SC		TN	
		Resale	Discount	Resale	Discount	Resale	Discount	Resale	Discount	Resale	Discount	Resale	Discount	Resale	Discount	Resale	Discount	Resale	Discount
1	Grandfathered Services (Note 1)	Yes	Yes	Yes	Yes	Yes	Yes	Yes	Yes	Yes	Yes	Yes	Yes	Yes	Yes	Yes	Yes	Yes	Yes
2	Contract Service Arrangements	Yes	Yes	Yes	Yes	Yes	Yes	Yes	Yes	Yes	Yes	Yes	Yes	Yes	Yes	Yes	Yes	Yes	Yes
3	Promotions - > 90 Days(Note 2)	Yes	Yes	Yes	Yes	Yes	Yes	Yes	Yes	Yes	Yes	Yes	Yes	Yes	Yes	Yes	Yes	Yes	Note 3
4	Promotions - < 90 Days (Note 2)	Yes	No	Yes	No	Yes	No	No	No	Yes	No	Yes	No	Yes	No	Yes	No	No	No
5	Lifeline/Link Up Services	Yes	Yes	Yes	Yes	Yes	Yes	Note 4	Note 4	Yes	Yes	Yes	Yes	Yes	Yes	Yes	Yes	Yes	Yes
6	911/E911 Services	Yes	Yes	Yes	Yes	Yes	Yes	Yes	Yes	No	No	Yes	Yes	Yes	Yes	Yes	Yes	Yes	Yes
7	N11 Services	Yes	Yes	Yes	Yes	Yes	Yes	No	No	No	No	Yes	Yes	Yes	Yes	No	No	Yes	Yes
8	AdWatch℠ Svc (See Note 6)	Yes	Yes	Yes	Yes	Yes	Yes	Yes	Yes	Yes	Yes	Yes	Yes	Yes	Yes	Yes	Yes	Yes	Yes
9	MemoryCall® Service	Yes	No	Yes	No	Yes	No	Yes	No	Yes	No	Yes	No	Yes	No	Yes	No	Yes	No
10	Mobile Services	Yes	No	Yes	No	Yes	No	Yes	No	Yes	No	Yes	No	Yes	No	Yes	No	Yes	No
11	Federal Subscriber Line Charges	Yes	No	Yes	No	Yes	No	Yes	No	Yes	No	Yes	No	Yes	No	Yes	No	Yes	No
12	Non-Recurring Charges	Yes	Yes	Yes	Yes	Yes	Yes	Yes	Yes	Yes	Yes	Yes	Yes	Yes	Yes	Yes	Yes	Yes	No
13	End User Line Charge – Number Portability	Yes	No	Yes	No	Yes	No	Yes	No	Yes	No	Yes	No	Yes	No	Yes	No	Yes	No
14	Public Telephone Access Service (PTAS)	Yes	Yes	Yes	Yes	Yes	Yes	Yes	Yes	Yes	Yes	Yes	Yes	Yes	Yes	Yes	No	Yes	Yes

Exclusions and Limitations
On Services Available for Resale

Applicable
Notes:

1. **Grandfathered services** can be resold only to existing subscribers of the grandfathered service.
2. Where available for resale, **promotions** will be made available only to end users who would have qualified for the promotion had it been provided by BellSouth directly.
3. In Tennessee, long-term **promotions** (offered for more than ninety (90) days) may be obtained at one of the following rates:
   (a) the stated tariff rate, less the wholesale discount;
   (b) the promotional rate (the promotional rate offered by BellSouth will not be discounted further by the wholesale discount rate)
4. **Lifeline/Link Up** services may be offered only to those subscribers who meet the criteria that BellSouth currently applies to subscribers of these services as set forth in Sections A3 and A4 of the BellSouth General Subscriber Services Tariff.
5. Some of BellSouth's local exchange and toll telecommunications services are not available in certain central offices and areas.
6. AdWatch℠ Service is tariffed as BellSouth® AIN Virtual Number Call Detail Service.

LINE INFORMATION DATA BASE (LIDB)
STORAGE AGREEMENT

I. SCOPE

A. This Agreement sets forth the terms and conditions pursuant to which BellSouth agrees to store in its LIDB certain information at the request of ACCESS Integrated and pursuant to which BellSouth, its LIDB customers and ACCESS Integrated shall have access to such information. ACCESS Integrated understands that BellSouth provides access to information in its LIDB to various telecommunications service providers pursuant to applicable tariffs and agrees that information stored at the request of ACCESS Integrated, pursuant to this Agreement, shall be available to those telecommunications service providers. The terms and conditions contained in the attached Addendum(s) are hereby made a part of this Agreement as if fully incorporated herein.

B. LIDB is accessed for the following purposes:
1. Billed Number Screening
2. Calling Card Validation
3. Fraud Control

C. BellSouth will provide seven days per week, 24-hours per day, fraud monitoring on Calling Cards, bill-to-third and collect calls made to numbers in BellSouth's LIDB, provided that such information is included in the LIDB query. BellSouth will establish fraud alert thresholds and will notify ACCESS Integrated of fraud alerts so that ACCESS Integrated may take action it deems appropriate. ACCESS Integrated understands and agrees BellSouth will administer all data stored in the LIDB, including the data provided by ACCESS Integrated pursuant to this Agreement, in the same manner as BellSouth's data for BellSouth's end user customers. BellSouth shall not be responsible to ACCESS Integrated for any lost revenue which may result from BellSouth's administration of the LIDB pursuant to its established practices and procedures as they exist and as they may be changed by BellSouth in its sole discretion from time to time.

ACCESS Integrated understands that BellSouth currently has in effect numerous billing and collection agreements with various interexchange carriers and billing clearing houses. ACCESS Integrated further understands that these billing and collection customers of BellSouth query BellSouth's LIDB to determine whether to accept various billing options from end users. Additionally, ACCESS Integrated understands that presently BellSouth has no method to differentiate between BellSouth's own billing and line data in the LIDB and such data which it includes in the LIDB on ACCESS Integrated's behalf pursuant to this Agreement. Therefore,

until such time as BellSouth can and does implement in its LIDB and its supporting systems the means to differentiate ACCESS Integrated's data from BellSouth's data and the Parties to this Agreement execute appropriate amendments hereto, the following terms and conditions shall apply:

(a) ACCESS Integrated agrees that it will accept responsibility for telecommunications services billed by BellSouth for its billing and collection customers for ACCESS Integrated's end user accounts which are resident in LIDB pursuant to this Agreement. ACCESS Integrated authorizes BellSouth to place such charges on ACCESS Integrated's bill from BellSouth and agrees that it shall pay all such charges. Charges for which ACCESS Integrated hereby takes responsibility include, but are not limited to, collect and third number calls.

(b) Charges for such services shall appear on a separate BellSouth bill page identified with the name of the entity for which BellSouth is billing the charge.

(c) ACCESS Integrated shall have the responsibility to render a billing statement to its end users for these charges, but ACCESS Integrated's obligation to pay BellSouth for the charges billed shall be independent of whether ACCESS Integrated is able or not to collect from ACCESS Integrated's end users.

(d) BellSouth shall not become involved in any disputes between ACCESS Integrated and the entities for which BellSouth performs billing and collection. BellSouth will not issue adjustments for charges billed on behalf of an entity to ACCESS Integrated. It shall be the responsibility of ACCESS Integrated and the other entity to negotiate and arrange for any appropriate adjustments.

II. TERM

This Agreement will be effective as of _____, and will continue in effect for one year, and thereafter may be continued until terminated by either Party upon thirty (30) days written notice to the other Party.

III. FEES FOR SERVICE AND TAXES

A. ACCESS Integrated will not be charged a fee for storage services provided by BellSouth to ACCESS Integrated, as described in Section I of this Agreement.

B. Sales, use and all other taxes (excluding taxes on BellSouth's income) determined by BellSouth or any taxing authority to be due to any federal, state or local taxing jurisdiction with respect to the provision of the service set forth herein will be paid by ACCESS Integrated. ACCESS Integrated shall have the right to have BellSouth

contest with the imposing jurisdiction, at ACCESS Integrated's expense, any such taxes that ACCESS Integrated deems are improperly levied.

IV. INDEMNIFICATION

To the extent not prohibited by law, each Party will indemnify the other and hold the other harmless against any loss, cost, claim, injury, or liability relating to or arising out of negligence or willful misconduct by the indemnifying Party or its agents or contractors in connection with the indemnifying Party's provision of services, provided, however, that any indemnity for any loss, cost, claim, injury or liability arising out of or relating to errors or omissions in the provision of services under this Agreement shall be limited as otherwise specified in this Agreement. The indemnifying Party under this Section agrees to defend any suit brought against the other Party for any such loss, cost, claim, injury or liability. The indemnified Party agrees to notify the other Party promptly, in writing, of any written claims, lawsuits, or demands for which the other Party is responsible under this Section and to cooperate in every reasonable way to facilitate defense or settlement of claims. The indemnifying Party shall not be liable under this Section for settlement by the indemnified Party of any claim, lawsuit, or demand unless the defense of the claim, lawsuit, or demand has been tendered to it in writing and the indemnifying Party has unreasonably failed to assume such defense.

V. LIMITATION OF LIABILITY

Neither Party shall be liable to the other Party for any lost profits or revenues or for any indirect, incidental or consequential damages incurred by the other Party arising from this Agreement or the services performed or not performed hereunder, regardless of the cause of such loss or damage.

VI. MISCELLANEOUS

A. It is understood and agreed to by the Parties that BellSouth may provide similar services to other companies.

B. All terms, conditions and operations under this Agreement shall be performed in accordance with, and subject to, all applicable local, state or federal legal and regulatory tariffs, rulings, and other requirements of the federal courts, the U. S. Department of Justice and state and federal regulatory agencies. Nothing in this Agreement shall be construed to cause either Party to violate any such legal or regulatory requirement and either Party's obligation to perform shall be subject to all such requirements.

C. ACCESS Integrated agrees to submit to BellSouth all advertising, sales promotion, press releases, and other publicity matters relating to this Agreement wherein BellSouth's corporate or trade names, logos, trademarks or service marks or those of BellSouth's affiliated companies are mentioned or language from which the

connection of said names or trademarks therewith may be inferred or implied; and ACCESS Integrated further agrees not to publish or use advertising, sales promotions, press releases, or publicity matters without BellSouth's prior written approval.

D. This Agreement constitutes the entire Agreement between ACCESS Integrated and BellSouth which supersedes all prior Agreements or contracts, oral or written representations, statements, negotiations, understandings, proposals and undertakings with respect to the subject matter hereof.

E. Except as expressly provided in this Agreement, if any part of this Agreement is held or construed to be invalid or unenforceable, the validity of any other Section of this Agreement shall remain in full force and effect to the extent permissible or appropriate in furtherance of the intent of this Agreement.

F. Neither Party shall be held liable for any delay or failure in performance of any part of this Agreement for any cause beyond its control and without its fault or negligence, such as acts of God, acts of civil or military authority, government regulations, embargoes, epidemics, war, terrorist acts, riots, insurrections, fires, explosions, earthquakes, nuclear accidents, floods, strikes, power blackouts, volcanic action, other major environmental disturbances, unusually severe weather conditions, inability to secure products or services of other persons or transportation facilities, or acts or omissions of transportation common carriers.

G. This Agreement shall be deemed to be a contract made under the laws of the State of Georgia, and the construction, interpretation and performance of this Agreement and all transactions hereunder shall be governed by the domestic law of such State.

RESALE ADDENDUM
TO LINE INFORMATION DATA BASE (LIDB)
STORAGE AGREEMENT

This is a Resale Addendum to the Line Information Data Base Storage Agreement dated _____, 2000, between BellSouth Telecommunications, Inc. ("BellSouth"), and ACCESS Integrated ("ACCESS Integrated"), effective the _____ day of _____, 2000.

I. GENERAL

This Addendum sets forth the terms and conditions for ACCESS Integrated's provision of billing number information to BellSouth for inclusion in BellSouth's LIDB. BellSouth will store in its LIDB the billing number information provided by ACCESS Integrated, and BellSouth will provide responses to on-line, call-by-call queries to this information for purposes specified in Section I.B. of the Agreement.

II. DEFINITIONS

A. Billing number - a number used by BellSouth for the purpose of identifying an account liable for charges. This number may be a line or a special billing number.

B. Line number - a ten-digit number assigned by BellSouth that identifies a telephone line associated with a resold local exchange service, or with a SPNP arrangement.

C. Special billing number - a ten-digit number that identifies a billing account established by BellSouth in connection with a resold local exchange service or with a SPNP arrangement.

D. Calling Card number - a billing number plus PIN number assigned by BellSouth.

E. PIN number - a four digit security code assigned by BellSouth which is added to a billing number to compose a fourteen digit calling card number.

F. Toll billing exception indicator - associated with a billing number to indicate that it is considered invalid for billing of collect calls or third number calls or both, by the ACCESS Integrated.

G. Billed Number Screening - refers to the activity of determining whether a toll billing exception indicator is present for a particular billing number.

H. Calling Card Validation - refers to the activity of determining whether a particular calling card number exists as stated or otherwise provided by a caller.

I. Billing number information - information about billing number or Calling Card number as assigned by BellSouth and toll billing exception indicator provided to BellSouth by the ACCESS Integrated.

III. RESPONSIBILITIES OF PARTIES

A. BellSouth will include billing number information associated with resold exchange lines or SPNP arrangements in its LIDB. The ACCESS Integrated will request any toll billing exceptions via the Local Service Request (LSR) form used to order resold exchange lines, or the SPNP service request form used to order SPNP arrangements.

B. Under normal operating conditions, BellSouth shall include the billing number information in its LIDB upon completion of the service order establishing either the resold local exchange service or the SPNP arrangement, provided that BellSouth shall not be held responsible for any delay or failure in performance to the extent such delay or failure is caused by circumstances or conditions beyond BellSouth's reasonable control. BellSouth will store in its LIDB an unlimited volume of the working telephone numbers associated with either the resold local exchange lines or the SPNP arrangements. For resold local exchange lines or for SPNP arrangements, BellSouth will issue line-based calling cards only in the name of ACCESS Integrated. BellSouth will not issue line-based calling cards in the name of ACCESS Integrated's individual end users. In the event that ACCESS Integrated wants to include calling card numbers assigned by the ACCESS Integrated in the BellSouth LIDB, a separate agreement is required.

C. BellSouth will provide responses to on-line, call-by-call queries to the stored information for the specific purposes listed in the next paragraph.

D. BellSouth is authorized to use the billing number information to perform the following functions for authorized users on an on-line basis:

1. Validate a 14 digit Calling Card number where the first 10 digits are a line number or special billing number assigned by BellSouth, and where the last four digits (PIN) are a security code assigned by BellSouth.

2. Determine whether the ACCESS Integrated has identified the billing number as one which should not be billed for collect or third number calls, or both.

RAO Hosting

1. RAO Hosting, Calling Card and Third Number Settlement System (CATS) and Non-Intercompany Settlement System (NICS) services provided to ACCESS Integrated by BellSouth will be in accordance with the methods and practices regularly adopted and applied by BellSouth to its own operations during the term of this Agreement, including such revisions as may be made from time to time by BellSouth.

2. ACCESS Integrated shall furnish all relevant information required by BellSouth for the provision of RAO Hosting, CATS and NICS.

3. Applicable compensation amounts will be billed by BellSouth to ACCESS Integrated on a monthly basis in arrears. Amounts due from one Party to the other (excluding adjustments) are payable within thirty (30) days of receipt of the billing statement.

4. ACCESS Integrated must have its own unique RAO code. Requests for establishment of RAO status where BellSouth is the selected Centralized Message Distribution System (CMDS) interfacing host, require written notification from ACCESS Integrated to the BellSouth RAO Hosting coordinator at least eight (8) weeks prior to the proposed effective date. The proposed effective date will be mutually agreed upon between the Parties with consideration given to time necessary for the completion of required Telcordia (formerly BellCore) functions. BellSouth will request the assignment of an RAO code from its connecting contractor, currently Telcordia (formerly BellCore), on behalf of ACCESS Integrated and will coordinate all associated conversion activities.

5. BellSouth will receive messages from ACCESS Integrated that are to be processed by BellSouth, another LEC or CLEC in the BellSouth region or a LEC outside the BellSouth region.

6. BellSouth will perform invoice sequence checking, standard EMI format editing, and balancing of message data with the EMI trailer record counts on all data received from ACCESS Integrated.

7. All data received from ACCESS Integrated that is to be processed or billed by another LEC or CLEC within the BellSouth region will be distributed to that LEC or CLEC in accordance with the agreement(s) which may be in effect between BellSouth and the involved LEC or CLEC.

8. All data received from ACCESS Integrated that is to be placed on the CMDS network for distribution outside the BellSouth region will be handled in accordance with the

agreement(s) which may be in effect between BellSouth and its connecting contractor (currently Telcordia (formerly BellCore)).

9. BellSouth will receive messages from the CMDS network that are destined to be processed by ACCESS Integrated and will forward them to ACCESS Integrated on a daily basis.

10. Transmission of message data between BellSouth and ACCESS Integrated will be via CONNECT:Direct.

11. All messages and related data exchanged between BellSouth and ACCESS Integrated will be formatted in accordance with accepted industry standards for EMI formatted records and packed between appropriate EMI header and trailer records, also in accordance with accepted industry standards.

12. ACCESS Integrated will ensure that the recorded message detail necessary to recreate files provided to BellSouth will be maintained for back-up purposes for a period of three (3) calendar months beyond the related message dates.

13. Should it become necessary for ACCESS Integrated to send data to BellSouth more than sixty (60) days past the message date(s), ACCESS Integrated will notify BellSouth in advance of the transmission of the data. If there will be impacts outside the BellSouth region, BellSouth will work with its connecting contractor and ACCESS Integrated to notify all affected Parties.

14. In the event that data to be exchanged between the two Parties should become lost or destroyed, both Parties will work together to determine the source of the problem. Once the cause of the problem has been jointly determined and the responsible Party (BellSouth or ACCESS Integrated) identified and agreed to, the company responsible for creating the data (BellSouth or ACCESS Integrated) will make every effort to have the affected data restored and retransmitted. If the data cannot be retrieved, the responsible Party will be liable to the other Party for any resulting lost revenue. Lost revenue may be a combination of revenues that could not be billed to the end users and associated access revenues. Both Parties will work together to estimate the revenue amount based upon historical data through a method mutually agreed upon. The resulting estimated revenue loss will be paid by the responsible Party to the other Party within three (3) calendar months of the date of problem resolution, or as mutually agreed upon by the Parties.

15. Should an error be detected by the EMI format edits performed by BellSouth on data received from ACCESS Integrated, the entire pack containing the affected data will

not be processed by BellSouth. BellSouth will notify ACCESS Integrated of the error condition. ACCESS Integrated will correct the error(s) and will resend the entire pack to BellSouth for processing. In the event that an out-of-sequence condition occurs on subsequent packs, ACCESS Integrated will resend these packs to BellSouth after the pack containing the error has been successfully reprocessed by BellSouth.

16. In association with message distribution service, BellSouth will provide ACCESS Integrated with associated intercompany settlements reports (CATS and NICS) as appropriate.

17. In no case shall either Party be liable to the other for any direct or consequential damages incurred as a result of the obligations set out in this agreement.

18. RAO Compensation

18.1 Rates for message distribution service provided by BellSouth for ACCESS Integrated are as set forth in Exhibit A to this Attachment.

18.2 Rates for data transmission associated with message distribution service are as set forth in Exhibit A to this Attachment .

18.3 Data circuits (private line or dial-up) will be required between BellSouth and ACCESS Integrated for the purpose of data transmission. Where a dedicated line is required, ACCESS Integrated will be responsible for ordering the circuit, overseeing its installation and coordinating the installation with BellSouth. ACCESS Integrated will also be responsible for any charges associated with this line. Equipment required on the BellSouth end to attach the line to the mainframe computer and to transmit successfully ongoing will be negotiated on a case by case basis. Where a dial-up facility is required, dial circuits will be installed in the BellSouth data center by BellSouth and the associated charges assessed to ACCESS Integrated. Additionally, all message toll charges associated with the use of the dial circuit by ACCESS Integrated will be the responsibility of ACCESS Integrated. Associated equipment on the BellSouth end, including a modem, will be negotiated on a case by case basis between the Parties.

18.4 All equipment, including modems and software, that is required on the ACCESS Integrated end for the purpose of data transmission will be the responsibility of ACCESS Integrated.

19. Intercompany Settlements Messages

19.1 This Section addresses the settlement of revenues associated with traffic originated from or billed by ACCESS Integrated as a facilities based provider of local exchange telecommunications services outside the BellSouth region. Only traffic that originates in one Bell operating territory and bills in another Bell operating territory is included. Traffic that originates and bills within the same Bell operating territory will be settled on a local basis between ACCESS Integrated and the involved company(ies), unless that company is participating in NICS.

19.2 Both traffic that originates outside the BellSouth region by ACCESS Integrated and is billed within the BellSouth region, and traffic that originates within the BellSouth region and is billed outside the BellSouth region by ACCESS Integrated, is covered by this Agreement (CATS). Also covered is traffic that either is originated by or billed by ACCESS Integrated, involves a company other than ACCESS Integrated, qualifies for inclusion in the CATS settlement, and is not originated or billed within the BellSouth region (NICS).

19.3 Once ACCESS Integrated is operating within the BellSouth territory, revenues associated with calls originated and billed within the BellSouth region will be settled via Telcordia (formerly BellCore)'s, its successor or assign, NICS system.

19.4 BellSouth will receive the monthly NICS reports from Telcordia (formerly BellCore), its successor or assign, on behalf of ACCESS Integrated. BellSouth will distribute copies of these reports to ACCESS Integrated on a monthly basis.

19.5 BellSouth will receive the monthly Calling Card and Third Number Settlement System (CATS) reports from Telcordia (formerly BellCore), its successor or assign, on behalf of ACCESS Integrated. BellSouth will distribute copies of these reports to ACCESS Integrated on a monthly basis.

19.6 BellSouth will collect the revenue earned by ACCESS Integrated from the Bell operating company in whose territory the messages are billed (CATS), less a per message billing and collection fee of five cents ($0.05), on behalf of ACCESS Integrated. BellSouth will remit the revenue billed by ACCESS Integrated to the Bell operating company in whose territory the messages originated, less a per message billing and collection fee of five cents ($0.05), on behalf on ACCESS Integrated. These two amounts will be netted together by BellSouth and the resulting charge or credit issued to ACCESS Integrated via a monthly Carrier Access Billing System (CABS) miscellaneous bill.

19.7 BellSouth will collect the revenue earned by ACCESS Integrated within the BellSouth territory from another CLEC also within the BellSouth territory (NICS)

where the messages are billed, less a per message billing and collection fee of five cents ($0.05), on behalf of ACCESS Integrated. BellSouth will remit the revenue billed by ACCESS Integrated within the BellSouth region to the CLEC also within the BellSouth region, where the messages originated, less a per message billing and collection fee of five cents ($0.05). These two amounts will be netted together by BellSouth and the resulting charge or credit issued to ACCESS Integrated via a monthly Carrier Access Billing System (CABS) miscellaneous bill.

BellSouth and ACCESS Integrated agree that monthly netted amounts of less than fifty dollars ($50.00) will not be settled.

Optional Daily Usage File

1. Upon written request from ACCESS Integrated, BellSouth will provide the Optional Daily Usage File (ODUF) service to ACCESS Integrated pursuant to the terms and conditions set forth in this section.

2 . ACCESS Integrated shall furnish all relevant information required by BellSouth for the provision of the Optional Daily Usage File.

3. The Optional Daily Usage Feed will contain billable messages that were carried over the BellSouth Network and processed in the BellSouth Billing System, but billed to a ACCESS Integrated customer.

   Charges for delivery of the Optional Daily Usage File will appear on ACCESS Integrateds' monthly bills. The charges are as set forth in Exhibit A to this Attachment.

4. The Optional Daily Usage Feed will contain both rated and unrated messages. All messages will be in the standard Alliance for Telecommunications Industry Solutions (ATIS) EMI record format.

5. Messages that error in ACCESS Integrated's billing system will be the responsibility of ACCESS Integrated. If, however, ACCESS Integrated should encounter significant volumes of errored messages that prevent processing by ACCESS Integrated within its systems, BellSouth will work with the to determine the source of the errors and the appropriate resolution.

6. The following specifications shall apply to the Optional Daily Usage Feed.

6.1 Usage To Be Transmitted

6.1.1 The following messages recorded by BellSouth will be transmitted to ACCESS Integrated:

- Message recording for per use/per activation type services (examples: Three Way Calling, Verify, Interrupt, Call Return, ETC.)

- Measured billable Local

- Directory Assistance messages

- IntraLATA Toll

- WATS & 800 Service
- N11
- Information Service Provider Messages
- Operator Services Messages
- Operator Services Message Attempted Calls (UNE only)
- Credit/Cancel Records
- Usage for Voice Mail Message Service

6.1.2 Rated Incollects (originated in BellSouth and from other companies) can also be on Optional Daily Usage File. Rated Incollects will be intermingled with BellSouth recorded rated and unrated usage. Rated Incollects will not be packed separately.

6.1.3 BellSouth will perform duplicate record checks on records processed to Optional Daily Usage File. Any duplicate messages detected will be deleted and not sent to ACCESS Integrated.

6.1.4 In the event that ACCESS Integrated detects a duplicate on Optional Daily Usage File they receive from BellSouth, ACCESS Integrated will drop the duplicate message (ACCESS Integrated will not return the duplicate to BellSouth).

6.2 Physical File Characteristics

6.2.1 The Optional Daily Usage File will be distributed to ACCESS Integrated via an agreed medium with CONNECT:Direct being the preferred transport method. The Daily Usage Feed will be a variable block format (2476) with an LRECL of 2472. The data on the Daily Usage Feed will be in a non-compacted EMI format (175 byte format plus modules). It will be created on a daily basis (Monday through Friday except holidays). Details such as dataset name and delivery schedule will be addressed during negotiations of the distribution medium. There will be a maximum of one dataset per workday per OCN.

6.2.2 Data circuits (private line or dial-up) may be required between BellSouth and ACCESS Integrated for the purpose of data transmission. Where a dedicated line is required, ACCESS Integrated will be responsible for ordering the circuit, overseeing its installation and coordinating the installation with BellSouth. ACCESS Integrated will also be responsible for any charges associated with this line. Equipment required on the BellSouth end to attach the line to the mainframe computer and to transmit

successfully ongoing will be negotiated on a case by case basis. Where a dial-up facility is required, dial circuits will be installed in the BellSouth data center by BellSouth and the associated charges assessed to ACCESS Integrated. Additionally, all message toll charges associated with the use of the dial circuit by ACCESS Integrated will be the responsibility of ACCESS Integrated. Associated equipment on the BellSouth end, including a modem, will be negotiated on a case by case basis between the parties. All equipment, including modems and software, that is required on ACCESS Integrated end for the purpose of data transmission will be the responsibility of ACCESS Integrated.

6.3 Packing Specifications

6.3.1 A pack will contain a minimum of one message record or a maximum of 99,999 message records plus a pack header record and a pack trailer record. One transmission can contain a maximum of 99 packs and a minimum of one pack.

6.3.2 The OCN, From RAO, and Invoice Number will control the invoice sequencing. The From RAO will be used to identify to ACCESS Integrated which BellSouth RAO that is sending the message. BellSouth and ACCESS Integrated will use the invoice sequencing to control data exchange. BellSouth will be notified of sequence failures identified by ACCESS Integrated and resend the data as appropriate.

THE DATA WILL BE PACKED USING ATIS EMI RECORDS.

6.4 Pack Rejection

6.4.1 ACCESS Integrated will notify BellSouth within one business day of rejected packs (via the mutually agreed medium). Packs could be rejected because of pack sequencing discrepancies or a critical edit failure on the Pack Header or Pack Trailer records (i.e. out-of-balance condition on grand totals, invalid data populated). Standard ATIS EMI Error Codes will be used. ACCESS Integrated will not be required to return the actual rejected data to BellSouth. Rejected packs will be corrected and retransmitted to ACCESS Integrated by BellSouth.

6.5 Control Data

ACCESS Integrated will send one confirmation record per pack that is received from BellSouth. This confirmation record will indicate ACCESS Integrated received the pack and the acceptance or rejection of the pack. Pack Status Code(s) will be populated using standard ATIS EMI error codes for packs that were rejected by ACCESS Integrated for reasons stated in the above section.

6.6 Testing

6.6.1 Upon request from ACCESS Integrated, BellSouth shall send test files to ACCESS Integrated for the Optional Daily Usage File. The parties agree to review and discuss the file's content and/or format. For testing of usage results, BellSouth shall request that ACCESS Integrated set up a production (LIVE) file. The live test may consist of ACCESS Integrated's employees making test calls for the types of services ACCESS Integrated requests on the Optional Daily Usage File. These test calls are logged by ACCESS Integrated, and the logs are provided to BellSouth. These logs will be used to verify the files. Testing will be completed within 30 calendar days from the date on which the initial test file was sent.

Enhanced Optional Daily Usage File

1. Upon written request from ACCESS Integrated, BellSouth will provide the Enhanced Optional Daily Usage File (EODUF) service to ACCESS Integrated pursuant to the terms and conditions set forth in this section. EODUF will only be sent to existing ODUF subscribers who request the EODUF option.

2. The ACCESS Integrated shall furnish all relevant information required by BellSouth for the provision of the Enhanced Optional Daily Usage File.

3. The Enhanced Optional Daily Usage File (EODUF) will provide usage data for local calls originating from resold Flat Rate Business and Residential Lines.

4. Charges for delivery of the Enhanced Optional Daily Usage File will appear on ACCESS Integrateds' monthly bills. The charges are as set forth in Exhibit A to this Attachment.

5. All messages will be in the standard Alliance for Telecommunications Industry Solutions (ATIS) EMI record format.

6. Messages that error in the billing system of ACCESS Integrated will be the responsibility of ACCESS Integrated. If, however, ACCESS Integrated should encounter significant volumes of errored messages that prevent processing by ACCESS Integrated within its systems, BellSouth will work with ACCESS Integrated to determine the source of the errors and the appropriate resolution.

7. The following specifications shall apply to the Optional Daily Usage Feed.

7.1 Usage To Be Transmitted

7.1.1 The following messages recorded by BellSouth will be transmitted to ACCESS Integrated:

Customer usage data for flat rated local call originating from ACCESS Integrated's end user lines (1FB or 1FR). The EODUF record for flat rate messages will include:

Date of Call
From Number
To Number
Connect Time
Conversation Time
Method of Recording
From RAO
Rate Class

Message Type
Billing Indicators
Bill to Number

7.1.2 BellSouth will perform duplicate record checks on EODUF records processed to Optional Daily Usage File. Any duplicate messages detected will be deleted and not sent to ACCESS Integrated.

7.1.3 In the event that ACCESS Integrated detects a duplicate on Enhanced Optional Daily Usage File they receive from BellSouth, ACCESS Integrated will drop the duplicate message (ACCESS Integrated will not return the duplicate to BellSouth).

7.2 Physical File Characteristics

7.2.1 The Enhanced Optional Daily Usage Feed will be distributed to ACCESS Integrated over their existing Optional Daily Usage File (ODUF) feed. The EODUF messages will be intermingled among ACCESS Integrated's Optional Daily Usage File (ODUF) messages. The EODUF will be a variable block format (2476) with an LRECL of 2472. The data on the EODUF will be in a non-compacted EMI format (175 byte format plus modules). It will be created on a daily basis (Monday through Friday except holidays).

7.2.2 Data circuits (private line or dial-up) may be required between BellSouth and ACCESS Integrated for the purpose of data transmission. Where a dedicated line is required, ACCESS Integrated will be responsible for ordering the circuit, overseeing its installation and coordinating the installation with BellSouth. ACCESS Integrated will also be responsible for any charges associated with this line. Equipment required on the BellSouth end to attach the line to the mainframe computer and to transmit successfully ongoing will be negotiated on a case by case basis. Where a dial-up facility is required, dial circuits will be installed in the BellSouth data center by BellSouth and the associated charges assessed to ACCESS Integrated. Additionally, all message toll charges associated with the use of the dial circuit by ACCESS Integrated will be the responsibility of ACCESS Integrated. Associated equipment on the BellSouth end, including a modem, will be negotiated on a case by case basis between the parties. All equipment, including modems and software, that is required on ACCESS Integrated's end for the purpose of data transmission will be the responsibility of ACCESS Integrated.

7.3 Packing Specifications

7.3.1 A pack will contain a minimum of one message record or a maximum of 99,999 message records plus a pack header record and a pack trailer record. One transmission can contain a maximum of 99 packs and a minimum of one pack.

7.3.2 The Operating Company Number (OCN), From Revenue Accounting Office (RAO), and Invoice Number will control the invoice sequencing. The From RAO will be used to identify to ACCESS Integrated which BellSouth RAO that is sending the message. BellSouth and ACCESS Integrated will use the invoice sequencing to control data exchange. BellSouth will be notified of sequence failures identified by ACCESS Integrated and resend the data as appropriate.

THE DATA WILL BE PACKED USING ATIS EMI RECORDS.

BELLSOUTH/ACCESS Integrated RATES
ODUF/EDOUF/CMDS

		RATES BY STATE								
DESCRIPTION	**USOC**	**AL**	**FL**	**GA**	**KY**	**LA**	**MS**	**NC**	**SC**	**TN**
ODUF/EODUF/CMDS										
ODUF: Recording, per message	N/A	$0.0002	$0.008	$0.008	$0.0008611	$0.00019	$0.0001179	$0.008	$0.0002862	$0.008
ODUF: Message Processing, per message	N/A	$0.0033	$0.004	$0.004	$0.0032357	$0.0024	$0.0032089	$0.004	$0.0032344	$0.004
EODUF: Message Processing, per message	N/A	$0.004	$0.004	$0.004	$0.004	$0.004	$0.004	$0.004	$0.004	$0.004
CMDS: Message Processing, per message	N/A	$0.004	$0.004	$0.004	$0.004	$0.004	$0.004	$0.004	$0.004	$0.004
ODUF: Message Processing, per magnetic tape provisioned	N/A	$55.19	$54.95	$54.95	$55.68	$47.30	$54.62	$54.95	$54.72	$54.95
EODUF: Message Processing, per magnetic tape provisioned	N/A	$47.30	$47.30	$47.30	$47.30	$47.30	$47.30	$47.30	$47.30	$47.30
ODUF: Data Transmission (CONNECT:DIRECT), per message	N/A	$0.00004	$0.001	$0.001	$0.0000365	$0.00003	$0.0000354	$0.001	$0.0000357	$0.001
EODUF: Data Transmission (CONNECT:DIRECT), per message	N/A	$0.0000364	$0.0000364	$0.0000364	$0.0000364	$0.0000364	$0.0000364	$0.0000364	$0.0000364	$0.0000364
CMDS: Data Transmission (CONNECT:DIRECT), per message	N/A	$0.001	$0.001	$0.001	$0.001	$0.001	$0.001	$0.001	$0.001	$0.001
* Volume and term arrangements are also available.										

NOTES:
If no rate is identified in the contract, the rate for the specific service or function will be as set forth in applicable BellSouth tariff or as negotiated by the parties upon request by either party.

Attachment 2

Network Elements and Other Services

TABLE OF CONTENTS

1. Introduction 3

2. Unbundled Loops, Integrated Digital Loop Carriers, Network Interfaces Device, Unbundled Loop Concentration (ULC) System, Sub loops and Dark Fiber 5

3. Switching 20

4. Enhanced Extended Link (EEL) 31

5. Port/Loop Combinations 34

6 Transport and Dark Fiber 36

7 BellSouth SWA 8XX Toll Free Dialing Ten Digit Screening Service 45

8 Line Information Database (LIDB) 47

9 Signaling 50

10. Operator Call Processing, Inward Operator Services and Directory Assistance Services 58

11. Calling Name (CNAM) Database Service 67

12. Basic 911 and E911 69

13. True-Up 71

LIDB Storage Agreement……Exhibit A

CNAM Database Services……Exhibit B

Rates……Exhibit C

ACCESS TO NETWORK ELEMENTS AND OTHER SERVICES

1. Introduction

1.1. This Attachment sets forth the unbundled network elements and combinations of unbundled network elements that BellSouth agrees to offer to ACCESS Integrated in accordance with its obligations under Section 251(c)(3) of the Act. The specific terms and conditions that apply to the unbundled network elements are described below in this Attachment 2. The price for each unbundled network element and combination of unbundled Network Elements are set forth in Exhibit A of this Agreement. As an option, deaveraged rates, where available, are included in Exhibit A. Where deaveraged rates are available, ACCESS Integrated is required to choose either deaveraged rates, which are zone specific, or statewide rates.

1.2. For purposes of this Agreement**, "**Network Element**"** is defined to mean a facility or equipment provided by BellSouth on an unbundled basis as is used by the CLEC in the provision of a telecommunications service. These unbundled network elements will be consistent with the requirements of the FCC 319 rule. For purposes of this Agreement, combinations of Network Elements shall be referred to as "Combinations."

1.2.1. Except as otherwise required by law, BellSouth shall not impose limitation restrictions or requirements or request for the use of the network elements or combinations that would impair the ability of ACCESS Integrated to offer telecommunications service in the manner ACCESS Integrated intends.

1.2.2. Except upon request by ACCESS Integrated, BellSouth shall not separate requested network elements that BellSouth currently combines.

1.2.2.1. Unless otherwise ordered by an appropriate state or federal regulatory agency, currently combined Network Elements are defined as elements that are already combined within BellSouth's network to a given location.

1.3. BellSouth shall, upon request of ACCESS Integrated, and to the extent technically feasible, provide to ACCESS Integrated access to its network elements for the provision of ACCESS Integrated's telecommunications service. If no rate is identified in the contract, the rate for the specific service or function will be as set forth in applicable BellSouth tariff or as negotiated by the Parties upon request by either Party.

1.4. ACCESS Integrated may purchase network elements and other services from BellSouth for the purpose of combining such network elements in any manner ACCESS Integrated chooses to provide telecommunication services to its

intended users, including recreating existing BellSouth services. With the exception of the sub-loop elements which are located outside of the central office, BellSouth shall deliver the network elements purchased by ACCESS Integrated for combining to the designated ACCESS Integrated collocation space. The network elements shall be provided as set forth in this Attachment.

1.5. Subject to applicable and effective FCC Rules and Orders as well as effective State Commission Orders, BellSouth will offer combinations of network elements pursuant to such orders. BellSouth will provide the following combined network elements for purchase by ACCESS Integrated. The rate of the following combined network elements is the sum of the individual element prices as set forth in this Attachment. Order Coordination as defined in Section 2 of Attachment 2 of this Agreement is available for each of these combinations:

- SL2 loop and cross connect
- Port and cross connect
- Port and cross connect and common (shared) transport
- Port and vertical features
- SL2 Loop with loop concentration
- Port and common (shared) transport
- SL2 Loop and LNP

1.6. BellSouth shall comply with the requirements as set forth in the technical references within Attachment 2 to the extent that they are consistent with the greater of BellSouth's actual performance or applicable industry standards.

1.7. In the event that any effective legislative, regulatory, judicial or other legal action modifies or redefines the "Network Elements" in a manner which materially affects the terms of this Attachment or the Network Elements and/or prices set forth herein, either Party may, on thirty (30) days written notice, require renegotiation of such terms, and the Parties shall renegotiate in good faith such new terms in accordance with such legislative, regulatory, judicial or other legal action. In the event such new terms are not renegotiated within ninety (90) days after the notice for renegotiation, either Party may petition the Commission for resolution of the dispute between the Parties. Each Party reserves the right to seek judicial review of any Commission ruling concerning this Attachment.

1.8. ACCESS Integrated will adopt and adhere to the standards contained in the applicable CLEC Work Center Operational Understanding Agreement regarding maintenance and installation of service.

1.9. Standards for Network Elements

1.9.1 BellSouth shall comply with the requirements set forth in the technical references, as well as any performance or other requirements identified in this Agreement, to the extent that they are consistent with the greater of BellSouth's actual performance or applicable industry standards.

1.9.2 If one or more of the requirements set forth in this Agreement are in conflict, the parties shall mutually agree on which requirement shall apply. If the parties cannot reach agreement, the dispute resolution process set forth in Section 12 of the General Terms and Conditions of this Agreement, incorporated herein by this reference, shall apply.

2. Unbundled Loops, Integrated Digital Loop Carriers, Network Interfaces Device, Unbundled Loop Concentration (ULC) System, Sub loops and Dark Fiber

All of the negotiated rates, terms and conditions set forth in this Section pertain to the provision of unbundled loops.

2.1 Unbundled Loops

2.1.1 Definition

2.1.2 The local loop network element ("Loop(s)") is defined as a transmission facility between a distribution frame (or its equivalent) in BellSouth's central office and the loop demarcation point at an end-user customer premises, including inside wire owned by BellSouth. The local loop network element includes all features, functions, and capabilities of the transmission facilities, including dark fiber and attached electronics (except those used for the provision of advanced services, such as Digital Subscriber Line Access Multiplexers) and line conditioning. The loop shall include the use of all test access functionality, including without limitation, smart jacks, for both voice and data.

2.1.3 The provisioning of service to a CLEC will require cross-office cabling and cross-connections within the central office to connect the loop to a local switch or to other transmission equipment in collocation space. These cross-connects are a separate element and are not considered a part of the loop.

2.1.4 BellSouth Order Coordination referenced in Attachment 2 includes two types: "Order Coordination" and "Order Coordination - Time Specific."

2.1.5 "Order Coordination" refers to standard BellSouth service order coordination involving SL2 voice loops and all digital loops. Order coordination for physical conversions will be scheduled at BellSouth's discretion during normal working hours on the committed due date and ACCESS Integrated advised.

2.1.6 "Order Coordination – Time Specific" refers to service order coordination in which ACCESS Integrated requests a specific time for a service order conversion to take place. Loops on a single service order of 14 or more loops will be provisioned on a project basis. This is a chargeable option for any coordinated order and is billed in addition to the OC charge. ACCESS Integrated may specify a time between 9:00 a.m. and 4:00 p.m. (location time) Monday through Friday (excluding holidays). If ACCESS Integrated specifies a time outside this window, or selects a time or quantity of loops that requires BellSouth technicians to work outside normal work hours, overtime charges will apply in addition to the OC and OC-TS charges. Overtime charges will be applied according to actual costs based on type of force group required to perform the work, overtime hours worked and any special circumstances.

2.1.7 Where facilities are available, BellSouth will install loops within a 5-7 business days interval. For orders of 14 or more loops, the installation will be handled on a project basis and the intervals will be set by the BellSouth project manager for that order. Some loops require a Service Inquiry (SI) to determine if facilities are available prior to issuing the order. The interval for the SI process is separate from the installation interval. For expedite requests by ACCESS Integrated, expedite charges will apply for intervals less than 5 days. The charges outlined in BellSouth's FCC # 1 Tariff, Section 5.1.1, will apply. If ACCESS Integrated cancels an order for network elements and other services, any costs incurred by BellSouth in conjunction with the provisioning of that order will be recovered in accordance with FCC #1 Tariff, Section 5.4.

2.1.8 If ACCESS Integrated modifies an order after being sent a Firm Order Confirmation (FOC) from BellSouth, any costs incurred by BellSouth to accommodate the modification will be reimbursed by ACCESS Integrated.

2.1.9 BellSouth will offer Unbundled Voice Loops (UVL) in two different service levels - Service Level One (SL1) and Service Level Two (SL2).

2.1.10 SL1 loops will be non-designed, will not have test points, and will not come with any Order Coordination (OC) or engineering information/circuit make-up data. Upon issuance of an order in the service order system, SL1 loops will be activated on the due date in the same manner and time frames that BellSouth normally activates POTS-type loops for its customers. If ACCESS Integrated requests work to be done for SL1s that requires BellSouth technicians to work outside normal work hours, overtime charges will be applied according to actual costs

based on type of force group required to perform the work, overtime hours worked and any special circumstances.

2.1.11 SL2 loops shall have test points, with or without conditioning, will be designed with a design layout record provided to ACCESS Integrated, and will be provided with OC. The OC feature will allow ACCESS Integrated to coordinate the installation of the loop with the disconnect of an existing customer's service and/or number portability service. In these cases, BellSouth will perform the order conversion with standard order coordination at its discretion during normal work hours.

2.1.12 BellSouth will also offer Unbundled Digital Loops (UDL). They will be designed, will be provisioned with test points (where appropriate), and will come standard with Order Coordination and a Design Layout Record (DLR).

2.1.13 As a chargeable option on all loops except UVL-SL1 and UCL, BellSouth will offer Order Coordination - Time Specific (OC-TS). This will allow ACCESS Integrated the ability to specify the time that the coordinated conversion takes place. The OC-TS charge for orders due on the same day at the same location will be applied on a per Local Service Request (LSR) basis.

2.1.14 ACCESS Integrated will be responsible for testing and isolating troubles on the loops. Once ACCESS Integrated has isolated a trouble to the BellSouth provided loop, ACCESS Integrated will issue a trouble to BellSouth on the loop. BellSouth will take the actions necessary to repair the loop if a trouble actually exists. BellSouth will repair these loops in the same time frames that BellSouth repairs similarly situated loops to its customers.

2.1.15 If ACCESS Integrated reports a trouble on SL1 loops and no trouble actually exists, BellSouth will charge ACCESS Integrated for any dispatching and testing (both inside and outside the CO) required by BellSouth in order to confirm the loop's working status.

2.1.16 If ACCESS Integrated reports a trouble on SL2 loops and no trouble actually exists, BellSouth will charge ACCESS Integrated for any dispatching and testing, (outside the CO) required by BellSouth in order to confirm the loop's working status.

2.1.17 In addition to the UVLs and UDLs, BellSouth shall make available an Unbundled Copper Loop (UCL). The UCL will be a copper twisted pair loop that is unencumbered by any intervening equipment (e.g., filters, load coils, range extenders, digital loop carrier, or repeaters). The UCL will be offered in two versions - Short and Long. A short UCL (18 kft or less) will be provisioned according to Resistance Design parameters. The long UCL (beyond 18kft) will be used when a CLEC wants to condition copper loops longer than 18kft by

removing load coils and other intervening equipment. BST will only ensure electrical continuity and balance relative to tip and ring on UCLs.

2.1.18 The UCL will be a designed circuit, with or without conditioning, provisioned with a test point and come standard with a DLR. OC will be offered as a chargeable option on all UCL loops. Order Coordination – Time Specific (OC-TS) will not be offered on UCLs.

2.1.19 The UCL is a dry cooper loop and is not intended to support any particular telecommunications service. ACCESS Integrated may use the UCL loop for a variety of services, including xDSL (e.g., ADSL and HDSL) services, by attaching appropriate terminal equipment of ACCESS Integrated's choosing. ACCESS Integrated will determine the type of service that will be provided over the loop.

2.1.20 Because the UCL loop shall be an unbundled loop offering that is separate and distinct from BellSouth's ADSL and HDSL capable loop offerings, CLEC agrees that BellSouth's UCL loop will not be held to the service level and performance expectations that apply to its ADSL and HDSL unbundled loop offerings. BellSouth shall only be obligated to maintain copper continuity and provide balance relative to tip and ring on UCL loops.

2.1.21 The UCL loop shall be provided to CLEC in accordance with BellSouth's Technical Reference 73600.

2.1.22 Technical Requirements

2.1.22.1 To the extent available within BellSouth's Network at a particular location, BellSouth will offer loops capable of supporting telecommunications services such as: POTS, Centrex, basic rate ISDN, analog PBX, voice grade private line, ADSL, HDSL, DS1 and digital data (up to 64 kb/s). If a requested loop type is not available, then the CLEC can use the Special Construction process to request that BellSouth place facilities or otherwise modify facilities in order to meet ACCESS Integrated's request.

2.1.22.2 ACCESS Integrated will be responsible for providing BellSouth with a Service Profile Identifier (SPID) associated with a particular ISDN-capable loop and end user. With the SPID, BellSouth will be able to adequately test the circuit and ensure that it properly supports ISDN service.

2.1.22.3 The loop will support the transmission, signaling, performance and interface requirements of the services described in 2.1.3 above. It is recognized that the requirements of different services are different, and that a number of types or grades of loops are required to support these services. Services provided over the loop by ACCESS Integrated will be consistent with industry standards and BellSouth's TR73600.

2.1.22.4 ACCESS Integrated may utilize the unbundled loops to provide any telecommunication service it wishes. However, BellSouth will only provision, maintain and repair the loops to the standards that are consistent with the type of loop ordered. For example, if ACCESS Integrated orders an ISDN-capable loop but wants to use the loop for a service other than ISDN, BellSouth will only support that the loop is capable of providing ISDN service. For non-service specific loops (e.g. UCL, loops modified by ACCESS Integrated using the Special Construction process), BellSouth will only support that the loop has copper continuity and balanced tip-and-ring.

2.1.22.5 In some instances, ACCESS Integrated will require access to a copper twisted pair loop unfettered by any intervening equipment (e.g., filters, load coils, range extenders, etc.), so that ACCESS Integrated can use the loop for a variety of services by attaching appropriate terminal equipment at the ends. ACCESS Integrated will determine the type of service that will be provided over the loop. In some cases, ACCESS Integrated may be required to pay additional charges for the removal of certain types of equipment. BellSouth's Special Construction process will be used to determine the costs and feasibility of these activities.

2.1.22.6 In cases in which ACCESS Integrated has requested that BellSouth remove equipment from the BellSouth loop, BellSouth will no longer be expected to maintain and repair the loop to the standards specified for that loop type in the TR73600 and other standards referenced in this Agreement. BellSouth will only support that these loops provide electrical continuity and balance relative to tip-and-ring.

2.1.22.7 ACCESS Integrated, in performance of its obligations pursuant to the preceding Section, shall maintain records that will reflect that pursuant to ACCESS Integrated's request BellSouth has removed certain equipment from BellSouth provided loops and as such the loop may not perform within the technical specifications associated with that loop type. ACCESS Integrated will not report to BellSouth troubles on said loops where the loops are not performing within the technical specifications of that loop type.

2.1.22.8 In addition, ACCESS Integrated recognizes there may be instances where a loop modified in this manner may be subjected to normal network configuration changes that may cause the circuit characteristics to be changed and may create an outage of the service that ACCESS Integrated has placed on the loop. If this occurs, BellSouth will work cooperatively with ACCESS Integrated to restore the circuit to its previous modified status as quickly as possible. ACCESS Integrated will pay the Time and Materials costs associated with BellSouth's work efforts needed to bring the loop back to its previous modified status.

2.1.22.9 The loop shall be provided to ACCESS Integrated in accordance with BellSouth's TR73600 Unbundled Local Loop Technical Specification and applicable industry standard technical references.

2.2 Loop Conditioning

2.2.1 Subject to applicable and effective FCC rules and orders, BellSouth shall condition loops, as requested by ACCESS Integrated, whether or not BellSouth offers advanced services to the End User on that loop.

2.2.2 Loop conditioning is defined as the removal from the loop of any devices that may diminish the capability of the loop to deliver high-speed switched wireline telecommunications capability, including xDSL service. Such devices include, but are not limited to, bridge taps, low pass filters, and range extenders.

2.2.3 BellSouth shall recover the cost of line conditioning requested by ACCESS Integrated through a recurring charge and/or nonrecurring charge(s) in accordance with the FCC's forward-looking pricing principles promulgated pursuant to section 252 (d) (1) of the Act and in compliance with FCC Rule 52.507 (e).

2.3. Integrated Digital Loop Carriers

2.3.1 Where BellSouth uses Integrated Digital Loop Carrier (IDLC) systems to provide the local loop and BellSouth has a suitable alternate facility available, BellSouth will make arrangements to permit ACCESS Integrated to order a contiguous local loop. To the extent it is technically feasible, these arrangements will provide ACCESS Integrated with the capability to serve end users at a level that is at parity with the level of service BellSouth provides its customers. If no alternate facility is available, BellSouth will utilize its Special Construction (SC) process to determine the additional costs required to provision the loop facilities. ACCESS Integrated will then have the option of paying the one-time SC rates to place the loop facilities or ACCESS Integrated may chose some other method of providing service to the end-user (e.g., Resale, private facilities, etc.).

2.4 Network Interface Device

2.4.1 <u>Definition</u>

The NID is defined as any means of interconnection of end-user customer premises wiring to BellSouth's distribution plant, such as a cross-connect device used for that purpose. The NID is a single-line termination device or that portion of a multiple-line termination device required to terminate a single line or circuit at the premises. The NID features two independent chambers or divisions that separate the service provider's network from the End User's on-premises wiring. Each chamber or division contains the appropriate connection points or posts to

which the service provider and the End User each make their connections. The NID provides a protective ground connection and is capable of terminating cables such as twisted pair cable.

2.4.2. BellSouth shall permit ACCESS Integrated to connect ACCESS Integrated's loop facilities to on-premises wiring through the BellSouth NID or at any other technically feasible point.

2.4.3 Access to Network Interface Device (NID)

2.4.3.1. Due to the wide variety of NIDs utilized by BellSouth (based on subscriber size and environmental considerations), ACCESS Integrated may access the on-premises wiring by any of the following means: BellSouth shall allow ACCESS Integrated to connect its loops directly to BellSouth's multi-line residential NID enclosures that have additional space and are not used by BellSouth or any other telecommunications carriers to provide service to the premise. ACCESS Integrated agrees to install compatible protectors and test jacks and to maintain the protection system and equipment and to indemnify BellSouth pursuant to Section 8 of the General Terms and Conditions of this Agreement.

2.4.3.2. Where an adequate length of on-premises wiring is present and environmental conditions permit, either Party may remove the on-premises wiring from the other Party's NID and connect that wire to that Party's own NID; or

2.4.3.3. Enter the subscriber access chamber or "side" of "dual chamber" NID enclosures for the purpose of extending a connecterized or spliced jumper wire from the on-premises wiring through a suitable "punch-out" hole of such NID enclosures; or

2.4.3.4. Request BellSouth to make other rearrangements to the on-premises wiring terminations or terminal enclosure on a time and materials cost basis to be charged to the requesting Party (i.e., ACCESS Integrated, its agent, the building owner or the subscriber). Such charges will be billed to the requesting Party.

2.4.3.5. In no case shall either Party remove or disconnect the other Party's loop facilities from either Party's NIDs, enclosures, or protectors, without state regulatory requirement, without providing prior notice to the other Party, and without appropriately capping off and guarding the other Party's loop. In such cases, it shall be the responsibility of the disconnecting party to properly ground the other party's loop, maintain the NID, and assume full liability for its action and any adverse consequences.

2.4.3.6. In no case shall either Party remove or disconnect ground wires from BellSouth's NIDs, enclosures, or protectors.

2.4.3.7. In no case shall either Party remove or disconnect NID modules, protectors, or terminals from BellSouth's NID enclosures.

2.4.3.8. Due to the wide variety of NID enclosures and outside plant environments BellSouth will work with ACCESS Integrated to develop specific procedures to establish the most effective means of implementing this Section, 2.4.3.

2.4.4 Technical Requirements

2.4.4.1 The NID shall provide an accessible point of interconnection and shall maintain a connection to ground.

2.4.4.2 The NID shall be capable of transferring electrical analog or digital signals between the subscriber's inside wiring and the Distribution Media and/or cross connect to ACCESS Integrated's NID, consistent with the NID's function at the Effective Date of this Agreement.

2.4.4.3 Where a BellSouth NID exists, it is provided in its "as is" condition. ACCESS Integrated may request BellSouth do additional work to the NID in accordance with Section 2.4.3.8.

2.4.4.4 When ACCESS Integrated deploys its own local loops with respect to multiple-line termination devices, ACCESS Integrated shall specify the quantity of NIDs connections that it requires within such device.

2.4.5 Interface Requirements

2.4.5.1 The NID shall be equal to or better than all of the requirements for NIDs set forth in the applicable industry standard technical references.

2.5 Unbundled Loop Concentration (ULC) System

2.5.1 BellSouth will provide to ACCESS Integrated Unbundled Loop Concentration (ULC). Loop concentration systems in the central office concentrate the signals transmitted over local loops onto a digital loop carrier system. The concentration device is placed inside a BellSouth central office. BellSouth will offer ULC with a TR008 interface or a TR303 interface.

2.5.2 ULC will be offered in two sizes. System A will allow up to 96 BellSouth loops to be concentrated onto multiple DS1s. The high-speed connection from the concentrator will be at the electrical DS1 level and may connect to ACCESS Integrated at ACCESS Integrated's collocation site. System B will allow up to 192 BellSouth loops to be concentrated onto multiple DS1s. System A may be upgraded to a System B. A minimum of two DS1s is required for each system (i.e., System A requires two DS1s and System B would require an additional two

DS1s or four in total). All DS1 interfaces will terminate to the CLEC's collocation space. ULC service is offered with or without concentration and with or without protection. A Line Interface element will be required for each loop that is terminated onto the ULC system. Rates for ULC are as set forth in this Attachment.

2.6 Sub-loop Elements

2.6.1 Where facilities permit and subject to applicable and effective FCC rules and orders, BellSouth shall offer access to its Unbundled Sub Loop (USL), Unbundled Subloop Concentration (USLC) System and Unbundled Network Terminating Wire (UNTW) elements. BellSouth shall provide non-discriminatory access, in accordance with 51.311 and section 251(c) (3) of the Act, to the subloop. On an unbundled basis and pursuant to the following terms and conditions and the rates approved by the Commission and set forth in this Attachment.

2.6.2 Subloop components include but are not limited to the following:

2.6.2.1 Unbundled Sub-Loop Distribution;

2.6.2.2 Unbundled Sub-Loop Concentration/Multiplexing Functionality; and

2.6.2.3 Unbundled Network Terminating Wire; and

2.6.2.4 Unbundled Sub-Loop Feeder.

2.6.3 Unbundled Sub-Loop (distribution facilities)

2.6.3.1 Definition

2.6.3.2 Subject to applicable and effective FCC rules and orders, the unbundled sub-loop distribution facility is dedicated transmission facility that BellSouth provides from a customer's point of demarcation to a BellSouth cross-connect device. The BellSouth cross-connect device may be located within a remote terminal (RT) or a stand-alone cross-box in the field or in the equipment room of a building. There are two offerings available for Unbundled Sub-Loops (USL):

2.6.3.3 Unbundled Sub-Loop Distribution (USL-D) will include the sub-loop facility from the cross-box in the field up to and including the point of demarcation.

2.6.3.4 BellSouth will also provide sub-loop interconnection to the intrabuilding network cable (INC) (riser cable). INC is the distribution facility inside a subscriber's building or between buildings on one customer's same premises (continuous property not separated by a public street or road). USL-INC (riser cable) will

include the facility from the cross-connect device in the building equipment room up to and including the point of demarcation.

2.6.4. Requirements for Unbundled Sub-Loop Distribution Facilities

2.6.4.1 Unbundled Sub-Loop distribution facilities were originally built as part of the entire voice grade loop from the BellSouth central office to the customer network interface. Therefore, the Unbundled Sub-Loop may have load coils, which are necessary for transmission of voice grade services. The Unbundled Sub-Loops will be provided in accordance with technical reference TR73600.

2.6.4.2 Unbundled Sub-Loop distribution facilities shall support functions associated with provisioning, maintenance and testing of the Unbundled Sub-Loop. In a scenario that involves connection at a BellSouth cross-box located in the field, ACCESS Integrated would be required to deliver a cable to the BellSouth remote terminal or cross-box to provide continuity to ACCESS Integrated's feeder facilities. This cable would be connected, by a BellSouth technician, to a cross-connect panel within the BellSouth RT/cross-box. ACCESS Integrated's cable pairs can then be connected to BellSouth's USL within the BellSouth cross-box by the BellSouth technician. In a scenario that requires connection in a building equipment room, BellSouth will install a cross connect panel on which access to the requested sub-loops will be connected. The CLEC's cable pairs can then be connected to the Unbundled Sub-Loop pairs on this cross-connect panel by the BellSouth technician.

2.6.4.3 BellSouth will provide Unbundled Sub-Loops where possible. Through the firm order Service Inquiry (SI) process, BellSouth will determine if it is feasible to place the required facilities where ACCESS Integrated has requested access to Unbundled Sub-Loops. If existing capacity is sufficient to meet the CLEC demand, then BellSouth will perform the set-up work as described in the next section 2.6.4.4 . If any work must be done to modify existing BellSouth facilities or add new facilities (other than adding the cross-connect panel in a building equipment room as noted in 2.6.4.4) to accommodate ACCESS Integrated's request for Unbundled Sub-Loops, BellSouth will use its Special Construction (SC) process to determine the additional costs required to provision the Unbundled Sub-Loops. ACCESS Integrated will then have the option of paying the one-time SC charge to modify the facilities to meet ACCESS Integrated's request.

2.6.4.4 During the initial set-up in a BellSouth cross-connect box in the field, the BellSouth technician will perform the necessary work to splice the CLEC's cable into the cross-connect box. For the set-up inside a building equipment room, BellSouth will perform the necessary work to install the cross-connect panel that will be used to provide access to the requested USLs. Once the set-up is

complete, the CLEC requested sub-loop pairs would be provisioned through the service order process based on the submission of a LSR to the LCSC.

2.6.5 Interface Requirements

2.6.5.1 Unbundled Sub-Loop shall be equal to or better than each of the applicable requirements set forth in the applicable industry standard technical references.

2.6.6 **Unbundled Sub-Loop Concentration System (USLC)**

2.6.6.1 Where facilities permit and where necessary to comply with an effective Commission order, BellSouth will provide to ACCESS Integrated with the ability to concentrate its sub-loops onto multiple DS1s back to the BellSouth Central Office. The DS1s will then be terminated into ACCESS Integrated's collocation space. TR-008 and TR303 interface standards are available.

2.6.6.2 USLC, using the Lucent Series 5 equipment, will be offered in two different systems. System A will allow up to 96 of ACCESS Integrated's sub-loops to be concentrated onto multiple DS1s. System B will allow an additional 96 of ACCESS Integrated's sub-loops to be concentrated onto multiple DS1s. One System A may be supplemented with one System B and they both must be physically located in a single Series 5 dual channel bank. A minimum of two DS1s is required for each system (i.e., System A requires two DS1s and System B would require an additional two DS1s or four in total). The DS1 level facility that connects the RT site with the serving wire center is known as a Feeder Interface. All DS1 Feeder Interfaces will terminate to the CLEC's collocation space within the SWC that serves the RT where the CLEC's sub-loops are connected. USLC service is offered with or without concentration and with or without a protection DS1.

2.6.6.3 In these scenarios ACCESS Integrated would be required to place a cross-box, remote terminal (RT), or other similar device and deliver a cable to the BellSouth remote terminal. This cable would be connected, by a BellSouth technician, to a cross-connect panel within the BellSouth RT/cross-box and would allow ACCESS Integrated's sub-loops to then be placed on the ULSC and transported to their collocation space at a DS1 level.

2.6.7 Unbundled Network Terminating Wire (UNTW)

2.6.7.1 BellSouth agrees to offer its Unbundled Network Terminating Wire (UNTW) to ACCESS Integrated pursuant to the following terms and conditions at rates as set forth in this Attachment.

2.6.7.2 Definition

2.6.7.2.1 Subject to applicable and effective FCC rules and orders, UNTW is a dedicated transmission facility that BellSouth provides from the Wiring Closet /Garden Terminal (or other type of cross-connect point) at the point of termination of BellSouth's loop distribution facilities to the end user's point of demarcation.

2.6.7.3 Requirements

2.6.7.3.1 BellSouth will offer spare pairs that are available to an end user's premises to ACCESS Integrated. Available spare pairs are defined as pairs that are not being utilized by BellSouth or by a third party to provide an end user with working service at the time of ACCESS Integrated's request for UNTW. If no spare pairs are available and the end user is no longer using BellSouth's local service, BellSouth will relinquish the first pair to ACCESS Integrated. If after BellSouth has relinquished the first pair to ACCESS Integrated and the end user decides to change local service providers to BellSouth, ACCESS Integrated will relinquish the first pair back to BellSouth.

2.6.7.3.2 Notwithstanding the foregoing, should BellSouth subsequently require the use of additional pair(s) to provide for the activation of additional lines in an end users premises in response to a request from such end user, ACCESS Integrated agrees to surrender their spare pair(s) upon request by BellSouth.

2.6.7.3.3 If an end user of ACCESS Integrated desires to receive local exchange service from a service provider who is not a Party to this Agreement, and such third party service provider needs access to the BellSouth UNTW to provide local exchange service to the end user, then ACCESS Integrated agrees to surrender the requisite number of its inactive spare pair(s) if no other spare pair is available and upon request by BellSouth.

2.6.7.3.4 If ACCESS Integrated has placed NTW at a location and an end user desires to receive local exchange service from BellSouth and BellSouth needs access to ACCESS Integrated's NTW to provide local exchange service to the end user, then ACCESS Integrated agrees to surrender the requisite number of its spare pair(s) upon request by BellSouth.

2.6.7.3.5 In new construction, where possible, both Parties may at their option and with the property owner's agreement install their own NTW. In existing construction, BellSouth shall not be required to install new or additional NTW beyond existing NTW to provision the services of the CLEC.

2.6.8 Technical Requirements

2.6.8.1 In these scenarios, BellSouth will connect the requested UNTW pairs to a single point of interconnection (SPOI) designed for CLEC access to BellSouth's NTW. The SPOI will be installed either near BellSouth's garden terminal or wiring closet. ACCESS Integrated will be required to place a cross-box, terminal or other similar device and deliver a cable to this SPOI. ACCESS Integrated will then connect their cable to the cross-connect panel to access the requested UNTW pairs.

2.7 Dark Fiber

2.7.1 Defintion

Dark Fiber is optical transmission facilities without attached multiplexing, aggregation or other electronics that connects two points within BellSouth's network. Dark Fiber also includes strands of optical fiber existing in aerial or underground cable which may have lightwave repeater (regenerator or optical amplifier) equipment interspliced to it at appropriate distances, but which has no line terminating elements terminated to such strands to operationalize its transmission capabilities.

2.7.2 Requirements

2.7.2.1 BellSouth shall make available Dark Fiber where it exists in BellSouth's network and where, as a result of future building or deployment, it becomes available. If BellSouth has plans to use the fiber within a two –year planning period, there is no requirement to provide said fiber to ACCESS Integrated.

2.7.2.2 If the requested dark fiber has any lightwave repeater equipment interspliced to it, BellSouth will remove such equipment at ACCESS Integrated's request subject to time and materials charges.

2.7.2.3 ACCESS Integrated may test the quality of the Dark Fiber to confirm its usability and performance specifications.

2.7.2.4 BellSouth shall use its best efforts to provide to ACCESS Integrated information regarding the location, availability and performance of Dark Fiber within ten (10) business days for a records based answer and twenty (20) business days for a field based answer, after receiving a request from ACCESS Integrated ("Request"). Within such time period, BellSouth shall send written confirmation of availability of the Dark Fiber ("Confirmation"). From the time of the Request to forty-five (45) days after Confirmation, BellSouth shall hold such requested Dark Fiber for ACCESS Integrated's use and may not allow any other party to use such media, including BellSouth.

2.7.2.5 BellSouth shall use its best efforts to make Dark Fiber available to ACCESS Integrated within thirty (30) business days after it receives written confirmation from ACCESS Integrated that the Dark Fiber previously deemed available by BellSouth is wanted for use by ACCESS Integrated. This includes identification of appropriate connection points (e.g., Light Guide Interconnection (LGX) or splice points) to enable ACCESS Integrated to connect or splice ACCESS Integrated provided transmission media (e.g., optical fiber) or equipment to the Dark Fiber.

2.7.2.6 Dark Fiber shall meet the manufacturer's design specifications.

2.7.2.7 ACCESS Integrated may splice and test Dark Fiber obtained from BellSouth using ACCESS Integrated or ACCESS Integrated designated personnel. BellSouth shall provide appropriate interfaces to allow splicing and testing of Dark Fiber. BellSouth shall provide an excess cable length of 25 feet minimum (for fiber in underground conduit) to allow the uncoiled fiber to reach from the manhole to a splicing van.

2.8 Rates

The prices that ACCESS Integrated shall pay to BellSouth for Network Elements and Other Services are set forth in Exhibit C to this Attachment.

2.9 Operational Support Systems (OSS)

BellSouth has developed and made available the following mechanized systems by which ACCESS Integrated may submit LSRs electronically.

LENS	Local Exchange Navigation System
EDI	Electronic Data Interchange
TAG	Telecommunications Access Gateway

2.9.1 LSRs submitted by means of one of these interactive interfaces will incur an OSS electronic ordering charge as specified in the table below. An individual LSR will be identified for billing purposes by its Purchase Order Number (PON). LSRs submitted by means other than one of these interactive interfaces (mail, fax, courier, etc.) will incur a manual order charge as specified in the table below:

OPERATIONAL SUPPORT SYSTEMS	**AL, GA, LA, MS, SC**	**FL, KY, NC, TN**
OSS LSR charge, per LSR received from the CLEC by one of the OSS interactive interfaces	$3.50 SOMEC	$3.50 SOMEC

Incremental charge per LSR received from the CLEC by means other than one of the OSS interactive interfaces	See applicable rate element	$19.99 SOMAN

2.9.2 Denial/Restoral OSS Charge

In the event ACCESS Integrated provides a list of customers to be denied and restored, rather than an LSR, each location on the list will require a separate PON and, therefore will be billed as one LSR per location.

2.9.3 Cancellation OSS Charge

ACCESS Integrated will incur an OSS charge for an accepted LSR that is later canceled by ACCESS Integrated.

Note: Supplements or clarifications to a previously billed LSR will not incur another OSS charge.

2.9.4 Network Elements and Other Services Manual Additive

2.9.4.1 The Commissions in some states have ordered per-element manual additive non-recurring charges (NRC) for Network Elements and Other Services ordered by means other than one of the interactive interfaces. These ordered Network Elements and Other Services manual additive NRCs will apply in these states, rather than the charge per LSR. The per-element charges are listed on the Rate Tables in Exhibit A.

3. Switching

All of the negotiated rates, terms and conditions set forth in this Section pertain to the provision of local and tandem switching.

3.1 Local Switching

BellSouth shall provide non-discriminatory access to local circuit switching capability, and local tandem switching capability, on an unbundled basis, except as set forth below in Section 3.1.3 to ACCESS Integrated for the provision of a telecommunications service. BellSouth shall provide non-discriminatory access to packet switching capability on an unbundled basis to ACCESS Integrated for the provision of a telecommunications service only in the limited circumstance described below in Section 3.3.4.6.

3.1.1. Except as otherwise provided herein, BellSouth shall not impose any restrictions on ACCESS Integrated regarding the use of Switching Capabilities purchased from BellSouth provided such use does not result in demonstrable harm to either the BellSouth network or personnel or the use of the BellSouth network by BellSouth or any other telecommunication carrier.

3.1.2. Local Circuit Switching Capability, including Tandem Switching Capability

3.1.2.1 Definition

Local Circuit Switching Capability is defined as: (A) line-side facilities, which include, but are not limited to, the connection between a loop termination at a main distribution frame and a switch line card; (B) trunk-side facilities, which include, but are not limited to, the connection between trunk termination at a trunk-side cross-connect panel and a switch trunk card; and (C) All features, functions, and capabilities of the switch, which include, but are not limited to: (1) the basi*c* switching function of connecting lines to lines, line to trunks, trunks to lines, and trunks to trunks, as well as the same basic capabilities made available to BellSouth's customers, such as a telephone number, white page listings, and dial tone; and (2) all other features that the switch is capable of providing, including but not limited to customer calling, customer local area signaling service features, and Centrex, as well as any technically feasible customized routing functions provided by the switch; (D) switching provided by remote switching modules.

3.1.2.2 When utilizing BellSouth's local circuit switching capability, local traffic shall be defined as set forth in Part B of the General Terms and Conditions.

3.1.3 Notwithstanding BellSouth's general duty to unbundle local circuit switching, BellSouth shall not be required to unbundle local circuit switching for ACCESS Integrated when ACCESS Integrated serves end-users with four (4) or more voice-grade (DS-0) equivalents or lines in locations served by BellSouth's local circuit switches, which are in the following MSAs: Atlanta, GA; Miami, FL; Orlando, FL; Ft. Lauderdale, FL; Charlotte-Gastonia-Rock Hill, NC; Greensboro-Winston Salem-High Point, NC; Nashville, TN; and New Orleans, LA, and BellSouth has provided non-discriminatory cost based access to the Enhanced Extended Link (EEL) throughout Density Zone 1 as determined by NECA Tariff No. 4 as in effect on January 1, 1999.

3.1.4 In the event that ACCESS Integrated orders local circuit switching for a single end user account name at a single physical end user location with four (4) or more two (2) wire voice-grade loops from a BellSouth central office listed on Exhibit A, BellSouth's sole recourse shall be to charge ACCESS Integrated a rate to be negotiated for use of the local circuit switching functionality for the affected facilities, or in the alternative, to charge ACCESS Integrated the local services resale rate for use of all Combinations used to provide the affected facilities to ACCESS Integrated.

3.1.5 A featureless port is one that has a line port, switching facilities, and an interoffice port. A featured port is a port that includes all features then capable or a number of then capable features specifically requested by ACCESS Integrated. Any features that are not currently then capable but are technically feasible through the switch can be requested through the BFR process.

3.1.6 BellSouth will provide to ACCESS Integrated customized routing of calls: (i) to a requested directory assistance services platform; (ii) to an operator services platform pursuant to Section 10 of Attachment 2; (iii) for ACCESS Integrated's PIC'ed toll traffic in a two (2) PIC environment to an alternative OS/DA platform designated by ACCESS Integrated. ACCESS Integrated customers may use the same dialing arrangements as BellSouth customers.

3.1.7 Remote Switching Module functionality is included in Switching Capability. The switching capabilities used will be based on the line side features they support.

3.1.8 Switching Capability will also be capable of routing local, intraLATA, interLATA, and calls to international customer's preferred carrier; call features (e.g. call forwarding) and Centrex capabilities.

3.1.9 Where required to do so in order to comply with an effective Commission order, BellSouth will provide to ACCESS Integrated purchasing local BellSouth switching and reselling BellSouth local exchange service under Attachment 1, selective routing of calls to a requested directory assistance services platform or operator services platform. ACCESS Integrated customers may use the same

dialing arrangements as BellSouth customers, but obtain a ACCESS Integrated branded service.

3.2 Technical Requirements

3.2.1 The requirements set forth in this Section apply to Local Switching, but not to the Data Switching function of Local Switching.

3.2.1.1 Local Switching shall be equal to or better than the requirements for Local Switching set forth in the applicable industry standard technical references.

3.2.1.2 When applicable, BellSouth shall route calls to the appropriate trunk or lines for call origination or termination.

3.2.1.3 Subject to this section, BellSouth shall route calls on a per line or per screening class basis to (1) BellSouth platforms providing Network Elements or additional requirements (2) Operator Services platforms, (3) Directory Assistance platforms, and (4) Repair Centers. Any other routing requests by ACCESS Integrated will be made pursuant to the Bona Fide Request/ New Business Request Process as set forth in General Terms and Conditions.

3.2.1.4 BellSouth shall provide unbranded recorded announcements and call progress tones to alert callers of call progress and disposition.

3.2.1.5 BellSouth shall activate service for an ACCESS Integrated customer or network interconnection on any of the Local Switching interfaces. This includes provisioning changes to change a customer from BellSouth's services to ACCESS Integrated's services without loss of switch feature functionality as defined in this Agreement.

3.2.1.6 BellSouth shall perform routine testing (e.g., Mechanized Loop Tests (MLT) and test calls such as 105, 107 and 108 type calls) and fault isolation on a mutually agreed upon schedule.

3.2.1.7 BellSouth shall repair and restore any equipment or any other maintainable component that may adversely impact Local Switching.

3.2.1.8 BellSouth shall control congestion points such as those caused by radio station call-ins, and network routing abnormalities. All traffic shall be restricted in a non-discriminatory manner.

3.2.1.9 BellSouth shall perform manual call trace and permit customer originated call trace.

3.2.1.10 Special Services provided by BellSouth will include the following:

3.2.1.10.1 Telephone Service Prioritization;

3.2.1.10.2 Related services for handicapped;

3.2.1.10.3 Soft dial tone where required by law; and

3.2.1.10.4 Any other service required by law.

3.2.1.11 BellSouth shall provide Switching Service Point (SSP) capabilities and signaling software to interconnect the signaling links destined to the Signaling Transfer Point Switch (STPS). These capabilities shall adhere to the technical specifications set forth in the applicable industry standard technical references.

3.2.1.12 BellSouth shall provide interfaces to adjuncts through Telcordia (formerly BellCore) standard interfaces. These adjuncts can include, but are not limited to, the Service Circuit Node and Automatic Call Distributors.

3.2.1.13 BellSouth shall provide performance data regarding a customer line, traffic characteristics or other measurable elements to ACCESS Integrated, upon a reasonable request from ACCESS Integrated. CLEC will pay BellSouth for all costs incurred to provide such performance data through the Business Opportunity Request process.

3.2.1.14 BellSouth shall offer Local Switching that provides feature offerings at parity to those provided by BellSouth to itself or any other Party. Such feature offerings shall include but are not limited to:

3.2.1.14.1 Basic and primary rate ISDN;

3.2.1.14.2 Residential features;

3.2.1.14.3 Customer Local Area Signaling Services (CLASS/LASS);

3.2.1.14.4 CENTREX (including equivalent administrative capabilities, such as customer accessible reconfiguration and detailed message recording); and

3.2.1.14.5 Advanced intelligent network triggers supporting ACCESS Integrated and BellSouth service applications.

3.2.2 BellSouth shall offer to ACCESS Integrated all AIN triggers in connection with its SMS/SCE offering which are supported by BellSouth for offering AIN-based services. Triggers that are currently available are:

3.2.2.1 Off-Hook Immediate

3.2.2.2 Off-Hook Delay

3.2.2.3 Termination Attempt

3.2.2.4 6/10 Public Office Dialing Plan

3.2.2.5 Feature Code Dialing

3.2.2.6 Customer Dialing Plan

3.2.3 When the following triggers are supported by BellSouth, BellSouth will make these triggers available to ACCESS Integrated:

3.2.3.1 Private EAMF Trunk

3.2.3.2 Shared Interoffice Trunk (EAMF, SS7)

3.2.3.3 N11

3.2.3.4 Automatic Route Selection

3.2.4 Where capacity exists, BellSouth shall assign each ACCESS Integrated customer line the class of service designated by ACCESS Integrated (e.g., using line class codes or other switch specific provisioning methods), and shall route directory assistance calls from ACCESS Integrated customers to ACCESS Integrated directory assistance operators at ACCESS Integrated's option.

3.2.5 Where capacity exists, BellSouth shall assign each ACCESS Integrated customer line the class of services designated by ACCESS Integrated (e.g., using line class codes or other switch specific provisioning methods) and shall route operator calls from ACCESS Integrated customers to ACCESS Integrated operators at ACCESS Integrated's option. For example, BellSouth may translate 0- and 0+ intraLATA traffic, and route the call through appropriate trunks to an ACCESS Integrated Operator Services Position System (OSPS). Calls from Local Switching must pass the ANI-II digits unchanged.

3.2.6 Local Switching shall be offered in accordance with the technical specifications set forth in the applicable industry standard references.

3.2.7 <u>Interface Requirements</u>

3.2.7.1 BellSouth shall provide the following interfaces to loops:

3.2.7.1.1 Standard Tip/Ring interface including loopstart or groundstart, on-hook signaling (e.g., for calling number, calling name and message waiting lamp);

3.2.7.1.2 Coin phone signaling;

3.2.7.1.3 Basic Rate Interface ISDN adhering to appropriate Telcordia (formerly BellCore) Technical Requirements;

3.2.7.1.4 Two-wire analog interface to PBX;

3.2.7.1.5 Four-wire analog interface to PBX;

3.2.7.1.6 Four-wire DS1 interface to PBX or customer provided equipment (e.g. computers and voice response systems);

3.2.7.1.7 Primary Rate ISDN to PBX adhering to ANSI standards Q.931, Q.932 and appropriate Telcordia (formerly BellCore) Technical Requirements;

3.2.7.1.8 Switched Fractional DS1 with capabilities to configure Nx64 channels (where N = 1 to 24); and

3.2.7.1.9 Loops adhering to Telcordia (formerly BellCore) TR-NWT-08 and TR-NWT-303 specifications to interconnect Digital Loop Carriers.

3.2.7.2 BellSouth shall provide access to the following but not limited to:

3.2.7.2.1 SS7 Signaling Network or Multi-Frequency trunking if requested by ACCESS Integrated;

3.2.7.2.2 Interface to ACCESS Integrated operator services systems or Operator Services through appropriate trunk interconnections for the system; and

3.2.7.2.3 Interface to ACCESS Integrated Directory Assistance Services through the ACCESS Integrated switched network or to Directory Assistance Services through the appropriate trunk interconnections for the system; and 950 access or other ACCESS Integrated required access to interexchange carriers as requested through appropriate trunk interfaces.

3.3 Tandem Switching

3.3.1 Definition

Tandem Switching is the function that establishes a communications path between two switching offices through a third switching office (the Tandem switch).

3.3.2 Technical Requirements

3.3.2.1 Tandem Switching shall have the same capabilities or equivalent capabilities as those described in Bell Communications Research TR-TSY-000540 Issue 2R2, Tandem Supplement, 6/1/90. The requirements for Tandem Switching include, but are not limited to the following:

3.3.2.1.1 Tandem Switching shall provide signaling to establish a tandem connection;

3.3.2.1.2 Tandem Switching will provide screening as jointly agreed to by ACCESS Integrated and BellSouth;

3.3.2.1.3 Tandem Switching shall provide Advanced Intelligent Network triggers supporting AIN features where such routing is not available from the originating end office switch, to the extent such Tandem switch has such capability;

3.3.2.1.4 Tandem Switching shall provide access to Toll Free number portability database as designated by ACCESS Integrated;

3.3.2.1.5 Tandem Switching shall provide all trunk interconnections discussed under the "Network Interconnection" section (e.g., SS7, MF, DTMF, DialPulse, PRI-ISDN, DID, and CAMA-ANI (if appropriate for 911));

3.3.2.1.5.1 Tandem Switching shall provide connectivity to PSAPs where 911 solutions are deployed and the tandem is used for 911; and

3.3.2.1.5.2 Where appropriate, Tandem Switching shall provide connectivity to transit traffic to and from other carriers.

3.3.2.1.6 Tandem Switching shall accept connections (including the necessary signaling and trunking interconnections) between end offices, other tandems, IXCs, ICOs, CAPs and CLEC switches.

3.3.2.1.7 Tandem Switching shall provide local tandeming functionality between two end offices including two offices belonging to different CLEC's (e.g., between a CLEC end office and the end office of another CLEC).

3.3.2.1.8 Tandem Switching shall preserve CLASS/LASS features and Caller ID as traffic is processed.

3.3.2.1.9 Tandem Switching shall record billable events and send them to the area billing centers designated by ACCESS Integrated. Tandem Switching will provide recording of all billable events as jointly agreed to by ACCESS Integrated and BellSouth.

3.3.2.1.10 Upon a reasonable request from ACCESS Integrated, BellSouth shall perform routine testing and fault isolation on the underlying switch that is providing Tandem Switching and all its interconnections. The results and reports of the testing shall be made immediately available to ACCESS Integrated.

3.3.2.1.11 BellSouth shall maintain ACCESS Integrated's trunks and interconnections associated with Tandem Switching at least at parity to its own trunks and interconnections.

3.3.2.1.12 BellSouth shall control congestion points and network abnormalities. All traffic will be restricted in a non-discriminatory manner.

3.3.2.1.13 Selective Call Routing through the use of line class codes is not available through the use of tandem switching. Selective Call Routing through the use of line class codes is an end office capability only. Detailed primary and overflow routing plans for all interfaces available within BellSouth's switching network shall be mutually agreed to by ACCESS Integrated and BellSouth.

3.3.2.1.14 Tandem Switching shall process originating toll-free traffic received from ACCESS Integrated's local switch.

3.3.2.1.15 In support of AIN triggers and features, Tandem Switching shall provide SSP capabilities when these capabilities are not available from the Local Switching Network Element, to the extent such Tandem Switch has such capability.

3.3.2.2 Interface Requirements

3.3.2.2.1 Tandem Switching shall provide interconnection to the E911 PSAP where the underlying Tandem is acting as the E911 Tandem.

3.3.2.2.2 Tandem Switching shall interconnect, with direct trunks, to all carriers with which BellSouth interconnects.

3.3.2.2.3 BellSouth shall provide all signaling necessary to provide Tandem Switching with no loss of feature functionality.

3.3.2.2.4 Tandem Switching shall interconnect with ACCESS Integrated's switch, using two-way trunks, for traffic that is transiting via BellSouth's network to interLATA or intraLATA carriers. At ACCESS Integrated's request, Tandem Switching shall record and keep records of traffic for billing.

3.3.2.2.5 Tandem Switching shall provide an alternate final routing pattern for ACCESS Integrated's traffic overflowing from direct end office high usage trunk groups.

3.3.2.2.6 Tandem Switching shall be equal or better than the requirements for Tandem Switching set forth in the applicable technical references.

3.4 AIN Selective Carrier Routing for Operator Services, Directory Assistance and Repair Centers

3.4.1 BellSouth will provide AIN Selective Carrier Routing at the request of ACCESS Integrated. AIN Selective Carrier Routing will provide ACCESS Integrated with the capability of routing operator calls, 0+ and 0- and 0+ NPA (LNPA) 555-1212 directory assistance, 1+411 directory assistance and 611 repair center calls to pre-selected destinations.

3.4.2 ACCESS Integrated shall order AIN Selective Carrier Routing through its Account Team. AIN Selective Carrier Routing must first be established regionally and then on a per central office, per state basis.

3.4.3 AIN Selective Carrier Routing is not available in DMS 10 switches.

3.4.4 Where AIN Selective Carrier Routing is utilized by ACCESS Integrated, the routing of ACCESS Integrated's end user calls shall be pursuant to information provided by ACCESS Integrated and stored in BellSouth's AIN Selective Carrier Routing Service Control Point database. AIN Selective Carrier Routing shall utilize a set of Line Class Codes (LCCs) unique to a basic class of service assigned on an 'as needed basis. The same LCCs will be assigned in each central office where AIN Selective Carrier Routing is established.

3.4.5 Upon ordering of AIN Selective Carrier Routing Regional Service, ACCESS Integrated shall remit to BellSouth the Regional Service Order non-recurring charges set forth in Exhibit A of this Attachment. There shall be a non-recurring End Office Establishment Charge per office due at the addition of each central office where AIN Selective Carrier Routing will be utilized. Said non-recurring charge shall be as set forth in Exhibit A of this Attachment. For each ACCESS Integrated end user activated, there shall be a non-recurring End User Establishment charge as set forth in Exhibit A of this Attachment, payable to BellSouth pursuant to the terms of the General Terms and Conditions, incorporated herein by this reference. ACCESS Integrated shall pay the AIN Selective Carrier Routing Per Query Charge set forth in Exhibit A of this Attachment.

3.4.6 This Regional Service Order non-recurring charge will be non-refundable and will be paid with 1/2 coming up-front with the submission of all fully completed required forms, including: Regional Selective Carrier Routing (SCR) Order Request-Form A, Central Office AIN Selective Carrier Routing (SCR) Order Request - Form B, AIN_SCR Central Office Identification Form - Form C, AIN_SCR Routing Options Selection Form - Form D, and Routing Combinations Table - Form E. BellSouth has 30 days to respond to the client's fully completed firm order as a Regional Service Order. With the delivery of this firm order response to the client, BellSouth considers that the delivery schedule of this service commences. The remaining 1/2 of the Regional Service Order payment must be paid when at least 90% of the Central Offices listed on the original order have been turned up for the service.

3.4.7 The non-recurring End Office Establishment Charge will be billed to the client following our normal monthly billing cycle for this type of order.

3.4.8 End-User Establishment Orders will not be turned-up until the 2nd payment is received for the Regional Service Order. The non-recurring End-User

Establishment Charges will be billed to the client following our normal monthly billing cycle for this type of order.

3.4.9 Additionally, the AIN Selective Carrier Routing Per Query Charge will be billed to the client following the normal billing cycle for per query charges.

3.4.10 All other network components needed, for example, unbundled switching and unbundled local transport, etc, will be billed according per contracted rates.

3.5 Packet Switching Capability

3.5.1 Definition

Packet Switching Capability. The packet switching capability network element is defined as the basic packet switching function of routing or forwarding packets, frames, cells or other data units based on address or other routing information contained in the packets, frames, cells or other data units, and the functions that are performed by Digital Subscriber Line Access Mulitplexers, including but not limited to:

3.5.2 The ability to terminate copper customer loops (which includes both a low band voice channel and a high-band data channel, or solely a data channel);

3.5.3 The ability to forward the voice channels, if present, to a circuit switch or multiple circuit switches;

3.5.4 The ability to extract data units from the data channels on the loops, and

3.5.5 The ability to combine data units from multiple loops onto one or more trunks connecting to a packet switch or packet switches.

3.5.6 BellSouth shall be required to provide non-discriminatory access to unbundled packet switching capability only where each of the following conditions are satisfied:

3.5.6.1 BellSouth has deployed digital loop carrier systems, including but not limited to, integrated digital loop carrier or universal digital loop carrier systems; or has deployed any other system in which fiber optic facilities replace copper facilities in the distribution section (e.g., end office to remote terminal, pedestal or environmentally controlled vault);

3.5.6.2 There are no spare copper loops capable of supporting the xDSL services ACCESS Integrated seeks to offer;

3.5.6.3 BellSouth has not permitted ACCESS Integrated to deploy a Digital Subscriber Line Access Multiplexer at the remote terminal, pedestal or environmentally controlled vault or other interconnection point, nor has the ACCESS Integrated obtained a virtual collocation arrangement at these subloop interconnection points as defined by 47 C.F.R. § 51.319 (b); and

3.5.6.4 BellSouth has deployed packet switching capability for its own use.

3.5.7 If there is a dispute as to whether BellSouth must provide Packet Switching , such dispute will be resolved according tot the dispute resolution process set forth in Section of the General Terms and Conditions of this Agreement, incorporated herein by this reference.

3.6 **Interoffice Transmission Facilities**

BellSouth shall provide nondiscriminatory access, in accordance with FCC Rule 51.311 and Section 251(c)(3) of the Act, to interoffice transmission facilities on an unbundled basis to ACCESS Integrated for the provision of a telecommunications service.

3.7 **Rates**

The prices that ACCESS Integrated shall pay to BellSouth for Network Elements and Other Services are set forth in Exhibit C to this Attachment.

3.8 **Operational Support Systems (OSS)**

BellSouth has developed and made available the following mechanized systems by which ACCESS Integrated may submit LSRs electronically.

LENS	Local Exchange Navigation System
EDI	Electronic Data Interchange
TAG	Telecommunications Access Gateway

3.8.1 LSRs submitted by means of one of these interactive interfaces will incur an OSS electronic ordering charge as specified in the table below. An individual LSR will be identified for billing purposes by its Purchase Order Number (PON). LSRs submitted by means other than one of these interactive interfaces (mail, fax, courier, etc.) will incur a manual order charge as specified in the table below:

OPERATIONAL SUPPORT SYSTEMS	**AL, GA, LA, MS, SC**	**FL, KY, NC, TN**

OSS LSR charge, per LSR received from the CLEC by one of the OSS interactive interfaces	$3.50 SOMEC	$3.50 SOMEC
Incremental charge per LSR received from the CLEC by means other than one of the OSS interactive interfaces	See applicable rate element	$19.99 SOMAN

3.8.2 Denial/Restoral OSS Charge

In the event ACCESS Integrated provides a list of customers to be denied and restored, rather than an LSR, each location on the list will require a separate PON and, therefore will be billed as one LSR per location.

3.8.3 Cancellation OSS Charge

ACCESS Integrated will incur an OSS charge for an accepted LSR that is later canceled by ACCESS Integrated.

Note: Supplements or clarifications to a previously billed LSR will not incur another OSS charge.

3.8.4 Network Elements and Other Services Manual Additive

3.8.4.1 The Commissions in some states have ordered per-element manual additive non-recurring charges (NRC) for Network Elements and Other Services ordered by means other than one of the interactive interfaces. These ordered Network Elements and Other Services manual additive NRCs will apply in these states, rather than the charge per LSR. The per-element charges are listed on the Rate Tables in Exhibit A.

4. Enhanced Extended Link (EEL)

4.1 Where facilities permit and where necessary to comply with an effective FCC and/or State Commission order, BellSouth shall offer access to the Enhanced Extended Link ("EEL") as defined in Section 4.3 below.

4.2 Definition

4.2.1 For purposes of this Agreement, references to "Currently Combined" network elements shall mean that such network elements are in fact already combined by BellSouth in the BellSouth network to provide service to a particular end user at a particular location.

4.2.2 BellSouth will provide access to the Enhanced Extended Link ("EEL") in the combinations set forth in 4.3 following. This offering is intended to provide connectivity from an end user's location through that end user's SWC and then connected to the ACCESS Integrated's POP serving wire center. The circuit must be connected to the ACCESS Integrated's circuit switch for the purpose of provisioning circuit switched telephone exchange service to the ACCESS Integrated's end-user customers. This can be done either in the collocation space at the POP SWC, or by using BellSouth's access facilities between the ACCESS Integrated's POP and ACCESS Integrated's collocation space at the POP SWC.

4.2.3 BellSouth shall provide combinations of loops and transport to ACCESS Integrated in Georgia regardless of whether or not such combinations of loops and transport are Currently Combined. Other combinations of network elements that are not Currently Combined but that BellSouth ordinarily combines in its network shall be made available to ACCESS Integrated in Georgia in accordance with Section 4.5.1.3 below. In all other states, BellSouth shall make available to ACCESS Integrated those EEL combinations and transport described in Section 4.3 below only to the extent such combinations of loop and transport network elements are Currently Combined. BellSouth will make available new combinations of loops and transport network elements in density Zone 1, as defined in 47 C.F.R. 69.123 as of January 1, 1999, of the Miami, Orlando, Fort Lauderdale, Charlotte, New Orleans, Greensboro and Nashville MSAs to ACCESS Integrated. Except as stated above, other combinations of network elements will be provided to ACCESS Integrated only to the extent such network elements are Currently Combined.

4.2.4 Additionally, there may be instances wherein ACCESS Integrated will require multiplexing functionality. BellSouth will provide access to multiplexing within the central office pursuant to the terms, conditions and rates set forth in its Access Services Tariffs when the customer utilizes special access interoffice facilities. Multiplexing will be provided pursuant to the interconnection agreement when unbundled network elements are used for interoffice transport.

4.3 <u>EEL Combinations</u>

4.3.1 - 2-wire voice grade extended loop with DS1 Dedicated Interoffice Transport;

4.3.2 - 4-wire voice grade extended loop with DS1 Dedicated Interoffice Transport;

4.3.3 - 4-wire 56 or 64 kbps extended digital loop with Dedicated DS1 Interoffice Transport;

4.3.4 - Extended 2-wire VG Dedicated Local Channel with Dedicated DS1 Interoffice Transport;

4.3.5 - Extended 4-wire VG Dedicated Local Channel with Dedicated DS1 Interoffice Transport;

4.3.6 - Extended 4-wire DS1 Digital Loop with Dedicated DS1 Interoffice Transport;

4.3.7 - Extended 4-wire DS1 Digital Loop with Dedicated DS3 Interoffice Transport; and

4.3.8 - Extended DS1 Dedicated Local Channel with Dedicated DS3 Interoffice Transport.

4.4 Special Access Service Conversions

4.4.1 ACCESS Integrated may not convert special access services to combinations of loop and transport network elements, whether or not ACCESS Integrated self-provides its entrance facilities (or obtains entrance facilities from a third party), unless ACCESS Integrated uses the combination to provide a significant amount of local exchange service, in addition to exchange access service, to a particular customer. To the extent ACCESS Integrated converts its special access services to combinations of loop and transport network elements at UNE prices, ACCESS Integrated, hereby, certifies that it is providing a significant amount of local exchange service over such combinations. BellSouth may at its sole discretion audit ACCESS Integrated records in order to verify the type of traffic being transmitted over combinations of loop and transport network elements. If, based on its audits, BellSouth concludes that ACCESS Integrated is not providing a significant amount of local exchange traffic over the combinations of loop and transport network elements, BellSouth may file a complaint with the appropriate Commission, pursuant to the dispute resolution process as set forth in the Interconnection Agreement. In the event that BellSouth prevails, BellSouth may convert such combinations of loop and transport network elements to special access services and may seek appropriate retroactive reimbursement from ACCESS Integrated.

4.4.2 EEL combinations for DS1 level and above will be available only when ACCESS Integrated provides and handles at least one third of the end user's local traffic over the facility provided. In addition, on the DS1 loop portion of the combination, at least fifty (50) percent of the activated channels must have at least five (5) percent local voice traffic individually and, for the entire DS1 facility, at least ten (10) percent of the traffic must be local voice traffic.

4.4.3 When combinations of loop and transport network elements include multiplexing, each of the individual DS1 circuits must meet the above criteria.

4.5 Rates

4.5.1 Georgia

4.5.1.1 The non-recurring and recurring rates for the EEL Combinations of network elements set forth in 4.3, whether Currently Combined or new, are as set forth in Exhibit A of this Agreement.

4.5.1.2 On an interim basis, for combinations of loop and transport network facilities not set forth in Section 4.3, where the elements are not Currently Combined but are ordinarily combined in BellSouth's network, the non-recurring and recurring charges for such UNE combinations shall be the sum of the stand-alone non-recurring and recurring charges of the network elements which make up the combination. These interim rates shall be subject to true-up based on the Commission's review of BellSouth's cost studies.

4.5.1.3 To the extent that ACCESS Integrated seeks to obtain other combinations of loop and transport network elements that BellSouth ordinarily combines in its network which have not been specifically priced by the Commission when purchased in combined form, ACCESS Integrated, at its option, can request that such rates be determined pursuant to the Bona Fide Request/New Business Request (NBR) process set forth in the Agreement.

4.5.2 All Other States

4.5.2.1 Subject to Section 4.2.3 preceding, for all other states, the non-recurring and recurring rates for the Currently Combined EEL combinations set forth in Section 1.3 and other Currently Combined loop and transport network elements will be the sum of the non-recurring and recurring rates for the individual network elements unless otherwise negotiated by the parties.

5. Port/Loop Combinations

5.1 At ACCESS Integrated's request, BellSouth shall provide access to combinations of port and loop network elements, as set forth in Section 5.4 below, that are currently combined in BellSouth's network except as specified in Sections 5.1.1 and 5.1.2 below.

5.1.1 BellSouth is not required to provide access to combinations of port and loop network elements in locations where BellSouth is not required to provide circuit switching.

5.1.2 BellSouth is not required to provide circuit switching in density Zone 1, as defined in 47 C.F.R. 69.123 as of January 1, 1999, of the Atlanta, Miami, Orlando, Fort Lauderdale, Charlotte, New Orleans, Greensboro and Nashville MSAs to ACCESS Integrated if ACCESS Integrated's customer has 4 or more DS0 equivalent lines.

5.2 Definition

5.2.1 For purposes of this Agreement, references to Currently Combined network elements shall mean that such network elements are in fact already combined in the BellSouth network to provide service to a particular end user at a particular location.

5.2.2 Combinations of port and loop network elements provide local exchange service for the origination or termination of calls. Section 5.4 following provides the combinations of port and loop network elements that may be ordered by ACCESS Integrated when currently combined except in those locations where BellSouth is not required to provide circuit switching, as set forth in Section 5.1.2 above.

5.2.3 In Georgia, BellSouth shall provide combinations of port and loop network elements to ACCESS Integrated regardless of whether or not such combinations are Currently Combined except in those locations where BellSouth is not required to provide circuit switching, as set forth in Section 5.1.2 above.

5.3 Rates for Combinations of Loop and Port Network Elements

5.3.1 Combinations of loop and port network elements, as set forth in Section 5.4, are provided in Exhibit C of this Attachment.

5.3.2 Rates for Circuit Switching

5.3.2.1 Rates for circuit switching, where BellSouth is not required, pursuant to Section 5.1, to provide circuit switching are as set forth in Exhibit C of this Attachment. BellSouth shall provide ACCESS Integrated these market rates for a period of seven (7) years from the effective date of the Agreement. The Parties recognize that this period of 7 years is longer than the term of the Agreement. Accordingly, the Parties agree that, for purposes of this section 5.3.2.1, and for the duration of this section, they shall be bound by the terms and conditions, including but not limited to the rates, set out in the Agreement as well as in any subsequent interconnection agreement that may be entered into by the Parties as a result of negotiation, arbitration, adoption of another company's interconnection agreement, or otherwise. The governing terms and conditions for any given time shall be those set out in the interconnection agreement in effect between the Parties at such time. If, at the expiration of the Agreement or any subsequent interconnection agreement, ACCESS Integrated does not enter into a replacement interconnection agreement with BellSouth, then this section 5.3.2.1 shall terminate.

5.4 Combination Offerings

5.4.1 2-wire voice grade port, voice grade loop, virtual cross connect, unbundled end office switching, unbundled end office trunk port, common transport per mile per MOU, common transport facilities termination, tandem switching, and tandem trunk port.

5.4.2 2-wire voice grade DID port, voice grade loop, virtual cross connect, unbundled end office switching, unbundled end office trunk port, common transport per mile per MOU, common transport facilities termination, tandem switching, and tandem trunk port.

5.4.3 2-wire CENTREX port, voice grade loop virtual cross connect, unbundled end office switching, unbundled end office trunk port, common transport per mile per MOU, common transport facilities termination, tandem switching, and tandem trunk port.

5.4.4. 2-wire ISDN Basic Rate Interface, voice grade loop virtual cross connect, unbundled end office switching, unbundled end office trunk port, common transport per mile per MOU, common transport facilities termination, tandem switching, and tandem trunk port.

5.4.5 2-wire ISDN Primary Rate Interface, DS1 loop virtual cross connect, unbundled end office switching, unbundled end office trunk port, common transport per mile per MOU, common transport facilities termination, tandem switching, and tandem trunk port.

5.4.6 4-wire DS1 Trunk port, DS1 Loop virtual cross connect, unbundled end office switching, unbundled end office trunk port, common transport per mile per MOU, common transport facilities termination, tandem switching, and tandem trunk port.

6. Transport and Dark Fiber

All of the negotiated rates, terms and conditions set forth in this Section pertain to the provision of unbundled transport and dark fiber.

6.1. Transport

6.1.1 Definition of Common (Shared) Transport

Common (Shared) Transport is an interoffice transmission path between two BellSouth end-offices, BellSouth end-office and a local tandem, or between two local tandems. Where BellSouth Network Elements are connected by intra-office wiring, such wiring is provided as a part of the Network Elements and is not Common (Shared) Transport. Common (Shared) Transport consists of BellSouth inter-office transport facilities and is unbundled from local switching.

6.1.2 Technical Requirements of Common (Shared) Transport

6.1.2.1 Common (Shared) Transport provided on DS1 or VT1.5 circuits, shall, at a minimum, meet the performance, availability, jitter, and delay requirements specified for Central Office to Central Office ("CO to CO") connections in the appropriate industry standards.

6.1.2.2 Common (Shared) Transport provided on DS3 circuits, STS-1 circuits, and higher transmission bit rate circuits, shall, at a minimum, meet the performance, availability, jitter, and delay requirements specified for CO to CO connections in the appropriate industry standards.

6.1.2.3 BellSouth shall be responsible for the engineering, provisioning, and maintenance of the underlying equipment and facilities that are used to provide Common (Shared) Transport.

6.1.2.4 At a minimum, Common (Shared) Transport shall meet all of the requirements set forth in the applicable industry standard technical references.

6.2 Interoffice transmission facility network elements include:

6.2.1 Dedicated transport, defined as BellSouth's transmission facilities, including all technically feasible capacity-related services including, but not limited to, DS1, DS3 and OCn levels, dedicated to a particular customer or carrier, that provide telecommunications between wire centers or switches owned by BellSouth, or between wire centers and switches owned by BellSouth and ACCESS Integrated.

6.2.2 Dark Fiber transport, defined as BellSouth's optical transmission facilities without attached multiplexing, aggregation or other electronics;

6.2.3 Shared transport, defined as transmission facilities shared by more than one carrier, including BellSouth, between end office switches, between end office switches and tandem switches, and between tandem switches, in BellSouth's network.

6.2.4 BellSouth shall:

6.2.4.1 provide ACCESS Integrated exclusive use of interoffice transmission facilities dedicated to a particular customer or carrier, or shared use of the features, functions, and capabilities of interoffice transmission facilities shared by more than one customer or carrier;

6.2.4.2 provide all technically feasible transmission facilities, features, functions, and capabilities that ACCESS Integrated could use to provide telecommunications services;

6.2.4.3 permit, to the extent technically feasible, ACCESS Integrated to connect such interoffice facilities to equipment designated by ACCESS Integrated, including but not limited to, ACCESS Integrated's collocated facilities; and

6.2.4.4 permit, to the extent technically feasible, ACCESS Integrated to obtain the functionality provided by BellSouth's digital cross-connect systems in the same manner that BellSouth provides such functionality to interexchange carriers.

6.2.5 Provided that the facility is used to transport a significant amount of local exchange services ACCESS Integrated shall be entitled to convert existing interoffice transmission facilities (i.e., special access) to the corresponding interoffice transport network element option.

6.3 Dedicated Transport

6.3.1 Definitions

6.3.2 Dedicated Transport is defined as BellSouth transmission facilities dedicated to a particular customer or carrier that provide telecommunications between wire centers owned by BellSouth or requesting telecommunications carriers, or between switches owned by BellSouth or requesting telecommunications carriers.

6.3.3 Unbundled Local Channel

6.3.4 Unbundled Local Channel is the dedicated transmission path between ACCESS Integrated's Point of Presence and the BellSouth Serving Wire Center's collocation.

6.3.5 Unbundled Interoffice Channel.

6.3.6 Unbundled Interoffice Channel is the dedicated transmission path that provides telecommunication between BellSouth's Serving Wire Centers' collocations.

6.3.7 BellSouth shall offer Dedicated Transport in each of the following ways:

6.3.7.1 As capacity on a shared UNE facility.

6.3.7.2 As a circuit (e.g., DS0, DS1, DS3) dedicated to ACCESS Integrated. This circuit shall consist of an Unbundled Local Channel or an Unbundled Interoffice Channel or both.

6.3.8 When Dedicated Transport is provided it shall include:

6.3.8.1 Transmission equipment such as, line terminating equipment, amplifiers, and regenerators;

6.3.8.2 Inter-office transmission facilities such as optical fiber, copper twisted pair, and coaxial cable.

6.3.9 Rates for Dedicated Transport are listed in this Attachment. For those states that do not contain rates in this Attachment the rates in the applicable State Access Tariff will apply as interim rates. When final rates are developed, these interim rates will be subject to true up, and the Parties will amend the Agreement to reflect the new rates.

6.3.10 Technical Requirements

6.3.10.1 This Section sets forth technical requirements for all Dedicated Transport.

6.3.10.2 When BellSouth provides Dedicated Transport, the entire designated transmission service (e.g., DS0, DS1, DS3) shall be dedicated to ACCESS Integrated designated traffic.

6.3.10.3 BellSouth shall offer Dedicated Transport in all technologies that become available including, but not limited to, (1) DS0, DS1 and DS3 transport services, and (2) SONET at available transmission bit rates.

6.3.10.4 For DS1 or VT1.5 circuits, Dedicated Transport shall, at a minimum, meet the performance, availability, jitter, and delay requirements specified for Customer Interface to Central Office ("CI to CO") connections in the appropriate industry standards.

6.3.10.5 Where applicable, for DS3, Dedicated Transport shall, at a minimum, meet the performance, availability, jitter, and delay requirements specified for CI to CO connections in the appropriate industry standards.

6.3.10.6 BellSouth shall offer the following interface transmission rates for Dedicated Transport:

6.3.10.6.1 DS0 Equivalent;

6.3.10.6.2 DS1 (Extended SuperFrame - ESF);

6.3.10.6.3 DS3 (signal must be framed);

6.3.10.6.4 SDH (Synchronous Digital Hierarchy) Standard interface rates in accordance with International Telecommunications Union (ITU) Recommendation G.707 and Plesiochronous Digital Hierarchy (PDH) rates per ITU Recommendation G.704.

6.3.10.6.5 When Dedicated Transport is provided, BellSouth shall design it according to BellSouth's network infrastructure to allow for the termination points specified by ACCESS Integrated.

6.3.11 At a minimum, Dedicated Transport shall meet each of the requirements set forth in the applicable industry technical references.

6.3.11.1 BellSouth Technical References:

6.3.11.2 TR-TSY-000191 Alarm Indication Signals Requirements and Objectives, Issue 1, May 1986.

6.3.11.3 TR 73501 LightGate®Service Interface and Performance Specifications, Issue D, June 1995.

6.3.11.4 TR 73525 MegaLink®Service, MegaLink Channel Service & MegaLink Plus Service Interface and Performance Specifications, Issue C, May 1996.

6.4 Unbundled Channelization

6.4.1 BellSouth agrees to offer access to Unbundled Channelization when available pursuant to following terms and conditions and at the rates set forth in the Attachment.

6.4.2 Definition

6.4.2.1 Unbundled Channelization (UC) provides the multiplexing capability that will allow a DS1 (1.544 Mbps) or DS3 (44.736 Mbps) or STS-1 Unbundled Network Element (UNE) or collocation cross-connect to be multiplexed or channelized at a BellSouth central office. This can be accomplished through the use of a stand-alone multiplexer or a digital cross-connect system at the discretion of BellSouth. Once UC has been installed, ACCESS Integrated can have channels activated on an as-needed basis by having BellSouth connect lower level UNEs via Central Office Channel Interfaces (COCIs).

6.4.3 Channelization capabilities will be as follows:

6.4.3.1 DS3 Channelization System: An element that channelizes a DS3 signal into 28 DS1s/STS-1s.

6.4.3.2 DS1 Channelization System: An element that channelizes a DS1 signal into 24 DS0s.

6.4.3.3 Central Office Channel Interfaces (COCI): Elements that can be activated on a channelization system.

6.4.4 DS1 Central Office Channel Interface elements can be activated on a DS3 Channelization System.

6.4.5 Voice Grade and Digital Data Central Office Channel Interfaces can be activated on a DS1 Channelization System.

6.4.6 AMI and B8ZS line coding with either Super Frame (SF) and Extended Super Frame (ESF) framing formats will be supported as options.

6.4.7 COCI will be billed on the lower level UNE order that is interfacing with the UC arrangement and will have to be compatible with those UNEs.

6.4.8 Channelization may be incorporated within dedicated transport or ordered as a stand-alone capability, which requires either the high or low speed side to be connected to collocation.

6.4.9 Technical Requirements

6.4.9.1 In order to assure proper operation with BST provided central office multiplexing functionality, the customer's channelization equipment must adhere strictly to form and protocol standards. Separate standards exist for the multiplex channel bank, for voice frequency encoding, for various signaling schemes, and for subrate digital access.

6.4.9.2 DS0 to DS1 Channelization

6.4.9.2.1 The DS1 signal must be framed utilizing the framing structure defined in ANSI T1.107, *Digital Hierarchy Formats Specifications* and ANSI T1.403.02, *DS1 Robbed-bit Signaling State Definitions*. DS0 to DS1 Channelization requirements are essential the same as defined in BellSouth Technical Reference 73525, *MegaLink® Service, MegaLink® Channel Service, MegaLink® Plus Service, and MegaLink® Light Service Interface and Performance Specification*.

6.4.9.3 DS1 to DS3 Channelization

6.4.9.3.1 The DS3 signal must be framed utilizing the framing structure define in ANSI T1.107, *Digital Hierarchy Formats Specifications*. DS1 to DS3 Channelization requirements are essentially the same as defined in BellSouth Technical Reference 73501, *LightGate® Service Interface and Performance Specifications*. The asynchronous M13 multiplex format (combination of M12 and M23 formats) is specified for terminal equipment that multiplexes 28 DS1s into a DS3.

6.4.9.4 DS1 to STS Channelization

6.4.9.4.1 The STS-1 signal must be framed utilizing the framing structure define in ANSI T1.105, *Synchronous Optical Network (SONET) – Basic Description Including Multiplex Structure, Rates and Formats* and T1.105.02, *Synchronous Optical Network (SONET) – Payload Mappings*. DS1 to STS Channelization requirements are essentially the same as defined in BellSouth Technical Reference TR 73501, *LightGate® Service Interface and Performance Specifications*

6.5 Dark Fiber

6.5.1 Definition

6.5.1.1 Dark Fiber is optical transmission facilities without attached multiplexing, aggregation or other electronics that connects two points within BellSouth's network. Dark Fiber also includes strands of optical fiber existing in aerial or underground cable which may have lightwave repeater (regenerator or optical amplifier) equipment interspliced to it at appropriate distances, but which has no line terminating elements terminated to such strands to operationalize its transmission capabilities.

6.5.1.2 Dark Fiber is unused strands of optical fiber. It may be strands of optical fiber existing in aerial or underground structure. No line terminating elements terminated to such strands to operationalize its transmission capabilities will be available. No regeneration or optical amplification will be included with this element.

6.5.2 Requirements

6.5.2.1 BellSouth shall make available Dark Fiber where it exists in BellSouth's network and where, as a result of future building or deployment, it becomes available. If BellSouth has plans to use the fiber within a two-year period, there is no requirement to provide said fiber to ACCESS Integrated.

6.5.2.2 If the requested dark fiber has any lightwave repeater equipment interspliced to it, BellSouth will remove such equipment at ACCESS Integrated's request subject to time and materials charges.

6.5.2.3 ACCESS Integrated may test the quality of the Dark Fiber to confirm its usability and performance specifications.

6.5.2.4 BellSouth shall use its best efforts to provide to ACCESS Integrated information regarding the location, availability and performance of Dark Fiber within ten (10) business days for a records based answer and twenty (20) business days for a field based answer, after receiving a request from ACCESS Integrated ("Request"). Within such time period, BellSouth shall send written confirmation of availability of the Dark Fiber ("Confirmation"). From the time of the Request to forty-five

(45) days after Confirmation, BellSouth shall hold such requested Dark Fiber for ACCESS Integrated's use an may not allow any other party to use such media, including BellSouth.

6.5.2.5 BellSouth shall use its best efforts to make Dark Fiber available to ACCESS Integrated within thirty (30) business days after it receives written confirmation from ACCESS Integrated that the Dark Fiber previously deemed available by BellSouth is wanted for use by ACCESS Integrated. This includes identification of appropriate connection points (e.g., Light Guide Interconnection (LGX) or splice points) to enable ACCESS Integrated to connect or splice ACCESS Integrated provided transmission media (e.g., optical fiber) or equipment to the Dark Fiber.

6.5.2.6 Dark Fiber shall meet the manufacturer's design specifications.

6.5.2.7 ACCESS Integrated may splice and test Dark Fiber obtained from BellSouth using ACCESS Integrated or ACCESS Integrated designated personnel. BellSouth shall provide appropriate interfaces to allow splicing and testing of Dark Fiber. BellSouth shall provide an excess cable length of 25 feet minimum (for fiber in underground conduit) to allow the uncoiled fiber to reach from the manhole to a splicing van.

6.6 Rates

6.6.1 The prices that ACCESS Integrated shall pay to BellSouth for Network Elements and Other Services are set forth in Exhibit C to this Attachment.

6.7 Operational Support Systems (OSS)

6.7.1 BellSouth has developed and made available the following mechanized systems by which ACCESS Integrated may submit LSRs electronically.

LENS Local Exchange Navigation System

EDI Electronic Data Interchange

TAG Telecommunications Access Gateway

6.7.2 LSRs submitted by means of one of these interactive interfaces will incur an OSS electronic ordering charge as specified in the table below. An individual LSR will be identified for billing purposes by its Purchase Order Number (PON). LSRs submitted by means other than one of these interactive interfaces (mail, fax, courier, etc.) will incur a manual order charge as specified in the table below:

OPERATIONAL SUPPORT SYSTEMS	**AL, GA, LA, MS, SC**	**FL, KY, NC, TN**
OSS LSR charge, per LSR received from the CLEC by one of the OSS interactive interfaces	$3.50 SOMEC	$3.50 SOMEC
Incremental charge per LSR received from the CLEC by means other than one of the OSS interactive interfaces	See applicable rate element	$19.99 SOMAN

6.7.3 Denial/Restoral OSS Charge

6.7.3.1 In the event ACCESS Integrated provides a list of customers to be denied and restored, rather than an LSR, each location on the list will require a separate PON and, therefore will be billed as one LSR per location.

6.7.4 Cancellation OSS Charge

6.7.4.1 ACCESS Integrated will incur an OSS charge for an accepted LSR that is later canceled by ACCESS Integrated.

Note: Supplements or clarifications to a previously billed LSR will not incur another OSS charge.

6.7.5 Network Elements and Other Services Manual Additive

6.7.5.1 The Commissions in some states have ordered per-element manual additive non-recurring charges (NRC) for Network Elements and Other Services ordered by means other than one of the interactive interfaces. These ordered Network Elements and Other Services manual additive NRCs will apply in these states, rather than the charge per LSR. The per-element charges are listed on the Rate Tables in Exhibit A.

7. BellSouth SWA 8XX Toll Free Dialing Ten Digit Screening Service

All of the negotiated rates, terms and conditions set forth in this Section pertain to the provision of 8XX Access Ten Digit Screening Services.

7.1 BellSouth SWA 8XX Toll Free Dialing Ten Digit Screening Service database

7.1.1 The BellSouth SWA 8XX Toll Free Dialing Ten Digit Screening Service database (herein known as 8XX SCP) is a SCP that contains customer record information and functionality to provide call-handling instructions for 8XX calls. The 8XX SCP IN software stores data downloaded from the national SMS and provides the routing instructions in response to queries from the SSP or tandem. The BellSouth SWA 8XX Toll Free Dialing Ten Digit Screening Service (herein know as 8XX TFD), utilizes the 8XX SCP to provide identification and routing of the 8XX calls, based on the ten digits dialed. 8XX TFD is provided with or without POTS number delivery, dialing number delivery, and other optional complex features as selected by ACCESS Integrated. BellSouth shall provide 8XX TFD in accordance with the following:

7.1.2 Technical Requirements

7.1.2.1 BellSouth shall provide ACCESS Integrated with access to the 8XX record information located in the 8XX SCP. The 8XX SCP contains current records as received from the national SMS and will provide for routing 8XX originating calls based on the dialed ten digit 8XX number.

7.1.2.2 The 8XX SCP is designated to receive and respond to queries using the American National Standard Specification of Signaling System Seven (SS7) protocol. The 8XX SCP shall determine the carrier identification based on all ten digits of the dialed number and route calls to the carrier, POTS number, dialing number and/or other optional feature selected by ACCESS Integrated.

7.1.2.3 The SCP shall also provide, at ACCESS Integrated's option, such additional feature as described in SR-TSV-002275 (BOC Notes on BellSouth Networks, SR-TSV-002275, Issue 2, (Telcordia (formerly BellCore), April 1994)) as are available to BellSouth. These may include but are not limited to:

7.1.2.3.1 Network Management;

7.1.2.3.2 Customer Sample Collection; and

7.1.2.3.3 Service Maintenance.

7.2 Automatic Location Identification/Data Management System (ALI/DMS)

7.2.1 The ALI/DMS Database contains end user information (including name, address, telephone information, and sometimes special information from the local service provider or end user) used to determine to which Public Safety Answering Point (PSAP) to route the call. The ALI/DMS database is used to provide more routing flexibility for E911 calls than Basic 911. BellSouth shall provide the Emergency Services Database in accordance with the following:

7.3 Rates

The prices that ACCESS Integrated shall pay to BellSouth for Network Elements and Other Services are set forth in Exhibit C to this Attachment.

8 Line Information Database (LIDB)

8.1 All of the negotiated rates, terms and conditions set forth in this Section pertain to the provision of LIDB.

8.2 BellSouth will store in its LIDB only records relating to service in the BellSouth region. The LIDB Storage Agreement is included in this Attachment.

8.2.1 Definition

8.2.2 The Line Information Database (LIDB) is a transaction-oriented database accessible through Common Channel Signaling (CCS) networks. It contains records associated with end user Line Numbers and Special Billing Numbers. LIDB accepts queries from other Network Elements and provides appropriate responses. The query originator need not be the owner of LIDB data. LIDB queries include functions such as screening billed numbers that provides the ability to accept Collect or Third Number Billing calls and validation of Telephone Line Number based non-proprietary calling cards. The interface for the LIDB functionality is the interface between BellSouth's CCS network and other CCS networks. LIDB also interfaces to administrative systems.

8.2.3 Technical Requirements

8.2.4 BellSouth will offer to ACCESS Integrated any additional capabilities that are developed for LIDB during the life of this Agreement.

8.2.4.1 BellSouth shall process ACCESS Integrated's Customer records in LIDB at least at parity with BellSouth customer records, with respect to other LIDB functions. BellSouth shall indicate to ACCESS Integrated what additional functions (if any) are performed by LIDB in the BellSouth network.

8.2.4.2 Within two (2) weeks after a request by ACCESS Integrated, BellSouth shall provide ACCESS Integrated with a list of the customer data items, which ACCESS Integrated would have to provide in order to support each required LIDB function. The list shall indicate which data items are essential to LIDB function, and which are required only to support certain services. For each data item, the list shall show the data formats, the acceptable values of the data item and the meaning of those values.

8.2.4.3 BellSouth shall provide LIDB systems for which operating deficiencies that would result in calls being blocked shall not exceed 30 minutes per year.

8.2.4.4 BellSouth shall provide LIDB systems for which operating deficiencies that would not result in calls being blocked shall not exceed 12 hours per year.

8.2.4.5 BellSouth shall provide LIDB systems for which the LIDB function shall be in overload no more than 12 hours per year.

8.2.4.6 All additions, updates and deletions of ACCESS Integrated data to the LIDB shall be solely at the direction of ACCESS Integrated. Such direction from ACCESS Integrated will not be required where the addition, update or deletion is necessary to perform standard fraud control measures (e.g., calling card auto-deactivation).

8.2.4.7 BellSouth shall provide priority updates to LIDB for ACCESS Integrated data upon ACCESS Integrated's request (e.g., to support fraud detection)**,** via password-protected telephone card, facsimile, or electronic mail within one hour of notice from the established BellSouth contact.

8.2.4.8 BellSouth shall provide LIDB systems such that no more than 0.01% of ACCESS Integrated customer records will be missing from LIDB, as measured by ACCESS Integrated audits. BellSouth will audit ACCESS Integrated records in LIDB against DBAS to identify record mismatches and provide this data to a designated ACCESS Integrated contact person to resolve the status of the records and BellSouth will update system appropriately. BellSouth will refer record of mismatches to ACCESS Integrated within one business day of audit. Once reconciled records are received back from ACCESS Integrated, BellSouth will update LIDB the same business day if less than 500 records are received before 1:00PM Central Time. If more than 500 records are received, BellSouth will contact ACCESS Integrated to negotiate a time frame for the updates, not to exceed three business days.

8.2.4.9 BellSouth shall perform backup and recovery of all of ACCESS Integrated's data in LIDB including sending to LIDB all changes made since the date of the most recent backup copy, in at least the same time frame BellSouth performs backup and recovery of BellSouth data in LIDB for itself. Currently, BellSouth performs backups of the LIDB for itself on a weekly basis and when a new software release is scheduled, a backup is performed prior to loading the new release.

8.2.4.10 BellSouth shall provide ACCESS Integrated with LIDB reports of data, which are missing or contain errors, as well as any misrouted errors, within a reasonable time period as negotiated between ACCESS Integrated and BellSouth.

8.2.4.11 BellSouth shall prevent any access to or use of ACCESS Integrated data in LIDB by BellSouth personnel that are outside of established administrative and fraud control personnel, or by any other Party that is not authorized by ACCESS Integrated in writing.

8.2.4.12 BellSouth shall provide ACCESS Integrated performance of the LIDB Data Screening function, which allows a LIDB to completely or partially deny specific query originators access to LIDB data owned by specific data owners, for Customer Data that is part of an NPA-NXX or RAO-0/1XX wholly or partially owned by ACCESS Integrated at least at parity with BellSouth Customer Data. BellSouth shall obtain from ACCESS Integrated the screening information associated with LIDB Data Screening of ACCESS Integrated data in accordance with this requirement. BellSouth currently does not have LIDB Data Screening capabilities. When such capability is available, BellSouth shall offer it to ACCESS Integrated under the Bona Fide Request/New Business Process as set forth in General Terms and Conditions.

8.2.4.13 BellSouth shall accept queries to LIDB associated with ACCESS Integrated customer records, and shall return responses in accordance with industry standards.

8.2.4.14 BellSouth shall provide mean processing time at the LIDB within 0.50 seconds under normal conditions as defined in industry standards.

8.2.4.15 BellSouth shall provide processing time at the LIDB within 1 second for 99% of all messages under normal conditions as defined in industry standards.

8.2.5 Interface Requirements

8.2.6 BellSouth shall offer LIDB in accordance with the requirements of this subsection.

8.2.6.1 The interface to LIDB shall be in accordance with the technical references contained within.

8.2.6.2 The CCS interface to LIDB shall be the standard interface described herein.

8.2.6.3 The LIDB Data Base interpretation of the ANSI-TCAP messages shall comply with the technical reference herein. Global Title Translation shall be maintained in the signaling network in order to support signaling network routing to the LIDB.

8.3 Rates

The prices that ACCESS Integrated shall pay to BellSouth for Network Elements and Other Services are set forth in Exhibit C to this Attachment.

9 Signaling

9.1 All of the negotiated rates, terms and conditions set forth in this Section pertain to the provision of Signaling Transport Services.

9.2 BellSouth agrees to offer access to signaling and access to BellSouth's signaling databases subject to compatibility testing and at the rates set forth in this Attachment. BellSouth may provide mediated access to BellSouth signaling systems and databases. Available signaling elements include signaling links, signal transfer points and service control points. Signaling functionality will be available with both A-link and B-link connectivity.

9.3 Signaling Link Transport

9.3.1 Definition Signaling Link Transport is a set of two or four dedicated 56 Kbps. transmission paths between CLEC-designated Signaling Points of Interconnection (SPOI) that provides appropriate physical diversity.

9.3.2 Technical Requirements

9.3.2.1 Signaling Link Transport shall consist of full duplex mode 56 kbps transmission paths.

9.3.3 Of the various options available, Signaling Link Transport shall perform in the following two ways:

9.3.3.1 As an "A-link" which is a connection between a switch or SCP and a home Signaling Transfer Point Switch (STP) pair; and

9.3.3.2 As a "B-link" which is a connection between two STP pairs in different company networks (e.g., between two STP pairs for two Competitive Local Exchange Carriers (CLECs)).

9.3.4 Signaling Link Transport shall consist of two or more signaling link layers as follows:

9.3.4.1 An A-link layer shall consist of two links.

9.3.4.2 A B-link layer shall consist of four links.

9.3.5 A signaling link layer shall satisfy a performance objective such that:

9.3.5.1 There shall be no more than two minutes down time per year for an A-link layer; and

9.3.5.2 There shall be negligible (less than 2 seconds) down time per year for a B-link layer.

9.3.5.3 A signaling link layer shall satisfy interoffice and intraoffice diversity of facilities and equipment, such that:

9.3.5.3.1 No single failure of facilities or equipment causes the failure of both links in an A-link layer (i.e., the links should be provided on a minimum of two separate physical paths end-to-end); and

9.3.5.3.2 No two concurrent failures of facilities or equipment shall cause the failure of all four links in a B-link layer (i.e., the links should be provided on a minimum of three separate physical paths end-to-end).

9.3.5.4 Interface Requirements

9.3.5.4.1 There shall be a DS1 (1.544 Mbps) interface at the ACCESS Integrated designated SPOIs. Each 56 kbps transmission path shall appear as a DS0 channel within the DS1 interface.

9.4 Signaling Transfer Points (STPs)

9.4.1 Definition - Signaling Transfer Points is a signaling network function that includes all of the capabilities provided by the signaling transfer point switches (STPs) and their associated signaling links which enable the exchange of SS7 messages among and between switching elements, database elements and signaling transfer point switches.

9.4.2 Technical Requirements

9.4.2.1 STPs shall provide access to Network Elements connected to BellSouth SS7 network. These include:

9.4.2.1.1 BellSouth Local Switching or Tandem Switching;

9.4.2.1.2 BellSouth Service Control Points/DataBases;

9.4.2.1.3 Third-party local or tandem switching;

9.4.2.1.4 Third-party-provided STPs.

9.4.2.2 The connectivity provided by STPs shall fully support the functions of all other Network Elements connected to the BellSouth SS7 network. This explicitly includes the use of the BellSouth SS7 network to convey messages which neither originate nor terminate at a signaling end point directly connected to the BellSouth SS7 network (i.e., transient messages). When the BellSouth SS7

network is used to convey transient messages, there shall be no alteration of the Integrated Services Digital Network User Part (ISDNUP) or Transaction Capabilities Application Part (TCAP) user data that constitutes the content of the message.

9.4.2.3 If a BellSouth tandem switch routes calling traffic, based on dialed or translated digits, on SS7 trunks between an ACCESS Integrated local switch and third party local switch, the BellSouth SS7 network shall convey the TCAP messages that are necessary to provide Call Management features (Automatic Callback, Automatic Recall, and Screening List Editing) between ACCESS Integrated local STPs and the STPs that provide connectivity with the third party local switch, even if the third party local switch is not directly connected to BellSouth STPs.

9.4.2.4 STPs shall provide all functions of the MTP as defined in the applicable industry standard technical references.

9.4.2.5 STPs shall provide all functions of the SCCP necessary for Class 0 (basic connectionless) service, as defined in Telcordia (formerly BellCore) ANSI Interconnection Requirements. In particular, this includes Global Title Translation (GTT) and SCCP Management procedures, as specified in T1.112.4. In cases where the destination signaling point is a ACCESS Integrated or third party local or tandem switching system directly connected to BellSouth SS7 network, BellSouth shall perform final GTT of messages to the destination and SCCP Subsystem Management of the destination. In all other cases, BellSouth shall perform intermediate GTT of messages to a gateway pair of STPs in an SS7 network connected with BellSouth SS7 network, and shall not perform SCCP Subsystem Management of the destination. If BellSouth performs final GTT to a ACCESS Integrated database, then ACCESS Integrated agrees to provide BellSouth with the Destination Point Code for the ACCESS Integrated database.

9.4.2.6 STPs shall provide on a non-discriminatory basis all functions of the OMAP commonly provided by STPs, as specified in the reference in Section 12.4.5 of this Attachment. All OMAP functions will be on a "where available" basis and can include:

9.4.2.6.1 MTP Routing Verification Test (MRVT); and

9.4.2.6.2 SCCP Routing Verification Test (SRVT).

9.4.2.7 In cases where the destination signaling point is a BellSouth local or tandem switching system or database, or is an ACCESS Integrated or third party local or tandem switching system directly connected to the BellSouth SS7 network, STPs shall perform MRVT and SRVT to the destination signaling point. In all other cases, STPs shall perform MRVT and SRVT to a gateway pair of STPs in an SS7 network connected with the BellSouth SS7 network. This requirement shall be

superseded by the specifications for Internetwork MRVT and SRVT if and when these become approved ANSI standards and available capabilities of BellSouth STPs, and if mutually agreed upon by ACCESS Integrated and BellSouth.

9.4.2.8 STPs shall be on parity with BellSouth.

9.4.2.9 SS7 Advanced Intelligent Network (AIN) Access

9.4.2.9.1 When technically feasible and upon request by ACCESS Integrated, SS7 Access shall be made available in association with switching. SS7 AIN Access is the provisioning of AIN 0.1 triggers in an equipped BellSouth local switch and interconnection of the BellSouth SS7 network with the ACCESS Integrated SS7 network to exchange TCAP queries and responses with an ACCESS Integrated SCP.

9.4.2.9.2 SS7 AIN Access shall provide ACCESS Integrated SCP access to BellSouth local switch in association with switching via interconnection of BellSouth SS7 and ACCESS Integrated SS7 Networks. BellSouth shall offer SS7 access through its STPs. If BellSouth requires a mediation device on any part of its network specific to this form of access, BellSouth must route its messages in the same manner. The interconnection arrangement shall result in the BellSouth local switch recognizing the ACCESS Integrated SCP as at least at parity with BellSouth's SCP's in terms of interfaces, performance and capabilities.

9.4.3 Interface Requirements

9.4.3.1 BellSouth shall provide the following STPs options to connect ACCESS Integrated or ACCESS Integrated-designated local switching systems or STPs to the BellSouth SS7 network:

9.4.3.1.1 An A-link interface from ACCESS Integrated local switching systems; and,

9.4.3.1.2 A B-link interface from ACCESS Integrated local STPs.

9.4.3.2 Each type of interface shall be provided by one or more sets (layers) of signaling links.

9.4.3.3 The Signaling Point of Interconnection (SPOI) for each link shall be located at a cross-connect element, such as a DSX-1, in the Central Office (CO) where BellSouth STP is located. There shall be a DS1 or higher rate transport interface at each of the SPOIs. Each signaling link shall appear as a DS0 channel within the DS1 or higher rate interface. BellSouth shall offer higher rate DS1 signaling for interconnecting ACCESS Integrated local switching systems or STPs with

BellSouth STPs as soon as these become approved ANSI standards and available capabilities of BellSouth STPs. BellSouth and ACCESS Integrated will work jointly to establish mutually acceptable SPOIs.

9.4.3.4 BellSouth CO shall provide intraoffice diversity between the SPOIs and BellSouth STPs, so that no single failure of intraoffice facilities or equipment shall cause the failure of both B-links in a layer connecting to a BellSouth STP. BellSouth and ACCESS Integrated will work jointly to establish mutually acceptable SPOIs.

9.4.3.5 STPs shall provide all functions of the MTP as defined in the applicable industry standard technical references.

9.4.3.6 Message Screening

9.4.3.6.1 BellSouth shall set message screening parameters so as to accept valid messages from ACCESS Integrated local or tandem switching systems destined to any signaling point within BellSouth's SS7 network where the ACCESS Integrated switching system has a legitimate signaling relation.

9.4.3.6.2 BellSouth shall set message screening parameters so as to pass valid messages from ACCESS Integrated local or tandem switching systems destined to any signaling point or network accessed through BellSouth's SS7 network where the ACCESS Integrated switching system has a legitimate signaling relation.

9.4.3.6.3 BellSouth shall set message screening parameters so as to accept and pass/send valid messages destined to and from ACCESS Integrated from any signaling point or network interconnected through BellSouth's SS7 network where the ACCESS Integrated SCP has a legitimate signaling relation.

9.4.4 STPs shall be equal to or better than all of the requirements for STPs set forth in the applicable industry standard technical references.

9.5 Service Control Points/Databases

9.5.1 Definition

9.5.1.1 Databases are the Network Elements that provide the functionality for storage of, access to, and manipulation of information required to offer a particular service and/or capability. Databases include, but are not limited to: Local Number Portability, LIDB, Toll Free Number Database, Automatic Location Identification/Data Management System, Calling Name Database, access to Service Creation Environment and Service Management System (SCE/SMS) application databases and Directory Assistance.

9.5.2 A Service Control Point (SCP) is a specific type of Database functionality deployed in a Signaling System 7 (SS7) network that executes service application logic in response to SS7 queries sent to it by a switching system also connected to the SS7 network. Service Management Systems provide operational interfaces to allow for provisioning, administration and maintenance of subscriber data and service application data stored in SCPs.

9.5.3 Technical Requirements for SCPs/Databases

9.5.3.1 Requirements for SCPs/Databases within this section address storage of information, access to information (e.g. signaling protocols, response times), and administration of information (e.g., provisioning, administration, and maintenance). All SCPs/Databases shall be provided to ACCESS Integrated in accordance with the following requirements.

9.5.3.2 BellSouth shall provide physical access to SCPs through the SS7 network and protocols with TCAP as the application layer protocol.

9.5.3.3 BellSouth shall provide physical interconnection to databases via industry standard interfaces and protocols (e.g. SS7, ISDN and X.25).

9.5.3.4 The reliability of interconnection options shall be consistent with requirements for diversity and survivability.

9.5.4 Database Availability

9.5.4.1 Call processing databases shall have a maximum unscheduled availability of 30 minutes per year. Unavailability due to software and hardware upgrades shall be scheduled during minimal usage periods and only be undertaken upon proper notification to providers, which might be impacted. Any downtime associated with the provision of call processing related databases will impact all service providers, including BellSouth, equally.

9.5.4.2 The operational interface provided by BellSouth shall complete Database transactions (i.e., add, modify, delete) for ACCESS Integrated customer records stored in BellSouth databases within 3 days, or sooner where BellSouth provisions its own customer records within a shorter interval.

9.6 Local Number Portability Database

9.6.1 Definition

9.6.2 The Permanent Number Portability (PNP) database supplies routing numbers for calls involving numbers that have been ported from one local service provider to another. PNP is currently being worked in industry forums. The results of these

forums will dictate the industry direction of PNP. BellSouth agrees to provide access to the PNP database at rates, terms and conditions as set forth by BellSouth and in accordance with an effective FCC or Commission directive.

9.7 SS7 Network Interconnection

9.7.1 Definition.

9.7.2 SS7 Network Interconnection is the interconnection of ACCESS Integrated local Signaling Transfer Point Switches (STP) and ACCESS Integrated local or tandem switching systems with BellSouth STPs. This interconnection provides connectivity that enables the exchange of SS7 messages among BellSouth switching systems and databases (DBs), ACCESS Integrated local or tandem switching systems, and other third-party switching systems directly connected to the BellSouth SS7 network.

9.7.3 Technical Requirements

9.7.3.1 SS7 Network Interconnection shall provide connectivity to all components of the BellSouth SS7 network. These include:

9.7.3.1.1 BellSouth local or tandem switching systems;

9.7.3.1.2 BellSouth DBs; and

9.7.3.1.3 Other third-party local or tandem switching systems.

9.7.4 The connectivity provided by SS7 Network Interconnection shall fully support the functions of BellSouth switching systems and DBs and ACCESS Integrated or other third-party switching systems with A-link access to the BellSouth SS7 network.

9.7.5 If traffic is routed based on dialed or translated digits between an ACCESS Integrated local switching system and a BellSouth or other third-party local switching system, either directly or via a BellSouth tandem switching system, then it is a requirement that the BellSouth SS7 network convey via SS7 Network Interconnection the TCAP messages that are necessary to provide Call Management services (Automatic Callback, Automatic Recall, and Screening List Editing) between the ACCESS Integrated local STPs and BellSouth or other third-party local switch.

9.7.6 When the capability to route messages based on Intermediate Signaling Network Identifier (ISNI) is generally available on BellSouth STPs, the BellSouth SS7 Network shall also convey TCAP messages using SS7 Network Interconnection in

similar circumstances where the BellSouth switch routes traffic based on a Carrier Identification Code (CIC).

9.7.7 SS7 Network Interconnection shall provide all functions of the MTP as specified in ANSI T1.111. This includes:

9.7.7.1 Signaling Data Link functions, as specified in ANSI T1.111.2;

9.7.7.2 Signaling Link functions, as specified in ANSI T1.111.3; and

9.7.7.3 Signaling Network Management functions, as specified in ANSI T1.111.4.

9.7.8 SS7 Network Interconnection shall provide all functions of the SCCP necessary for Class 0 (basic connectionless) service, as specified in ANSI T1.112. In particular, this includes Global Title Translation (GTT) and SCCP Management procedures, as specified in T1.112.4. Where the destination signaling point is a BellSouth switching system or DB, or is another third-party local or tandem switching system directly connected to the BellSouth SS7 network, SS7 Network Interconnection shall include final GTT of messages to the destination and SCCP Subsystem Management of the destination. Where the destination signaling point is an ACCESS Integrated local or tandem switching system, SS7 Network Interconnection shall include intermediate GTT of messages to a gateway pair of ACCESS Integrated local STPs, and shall not include SCCP Subsystem Management of the destination.

9.7.9 SS7 Network Interconnection shall provide all functions of the Integrated Services Digital Network User Part (ISDNUP), as specified in ANSI T1.113.

9.7.10 SS7 Network Interconnection shall provide all functions of the TCAP, as specified in ANSI T1.114.

9.7.11 If and when Internetwork MTP Routing Verification Test (MRVT) and SCCP Routing Verification Test (SRVT) become approved ANSI standards and available capabilities of BellSouth STPs, SS7 Network Interconnection shall provide these functions of the OMAP.

9.7.12 SS7 Network Interconnection shall be equal to or better than the following performance requirements:

9.7.12.1 MTP Performance, as specified in ANSI T1.111.6;

9.7.12.2 SCCP Performance, as specified in ANSI T1.112.5; and

9.7.12.3 ISDNUP Performance, as specified in ANSI T1.113.5.

9.7.13 Interface Requirements

9.7.13.1 BellSouth shall offer the following SS7 Network Interconnection options to connect ACCESS Integrated or ACCESS Integrated-designated local or tandem switching systems or STPs to the BellSouth SS7 network:

9.7.13.1.1 A-link interface from ACCESS Integrated local or tandem switching systems; and

9.7.13.1.2 B-link interface from ACCESS Integrated STPs.

9.7.13.2 The Signaling Point of Interconnection (SPOI) for each link shall be located at a cross-connect element, such as a DSX-1, in the Central Office (CO) where the BellSouth STP is located. There shall be a DS1 or higher rate transport interface at each of the SPOIs. Each signaling link shall appear as a DS0 channel within the DS1 or higher rate interface. BellSouth shall offer higher rate DS1 signaling links for interconnecting ACCESS Integrated local switching systems or STPs with BellSouth STPs as soon as these become approved ANSI standards and available capabilities of BellSouth STPs. BellSouth and ACCESS Integrated will work jointly to establish mutually acceptable SPOI.

9.7.13.3 BellSouth CO shall provide intraoffice diversity between the SPOIs and the BellSouth STP, so that no single failure of intraoffice facilities or equipment shall cause the failure of both B-links in a layer connecting to a BellSouth STP. BellSouth and ACCESS Integrated will work jointly to establish mutually acceptable SPOI.

9.7.13.4 The protocol interface requirements for SS7 Network Interconnection include the MTP, ISDNUP, SCCP, and TCAP. These protocol interfaces shall conform to the applicable industry standard technical references.

9.7.13.5 BellSouth shall set message screening parameters to accept messages from ACCESS Integrated local or tandem switching systems destined to any signaling point in the BellSouth SS7 network with which the ACCESS Integrated switching system has a legitimate signaling relation.

9.7.13.6 SS7 Network Interconnection shall be equal to or better than all of the requirements for SS7 Network Interconnection set forth in the applicable industry standard technical references.

9.8 Rates

The prices that ACCESS Integrated shall pay to BellSouth for Network Elements and Other Services are set forth in Exhibit C to this Attachment.

10. Operator Call Processing, Inward Operator Services and Directory Assistance Services

10.1 All of the negotiated rates, terms and conditions set forth in this Section pertain to the provision of Operator Call Processing, Inward Operator Services and Directory Assistance Services.

10.2 Operator Systems

10.2.1 Definition. Operator Systems is the Network Element that provides operator and automated call handling and billing, special services, end user telephone listings and optional call completion services. The Operator Systems, Network Element provides two types of functions: Operator Service functions and Directory Assistance Service functions, each of which are described in detail below.

10.3 Operator Service

10.3.1 Definition. Operator Service provides: (1) operator handling for call completion (for example, collect, third number billing, and manual credit card calls), (2) operator or automated assistance for billing after the end user has dialed the called number (for example, credit card calls); and (3) special services including but not limited to Busy Line Verification and Emergency Line Interrupt (ELI), Emergency Agency Call, Operator-assisted Directory Assistance, and Rate Quotes.

10.3.2 Requirements

10.3.2.1 When ACCESS Integrated requests BellSouth to provide Operator Services, the following requirements apply:

10.3.2.1.1 BellSouth shall complete 0+ and 0- dialed local calls.

10.3.2.1.2 BellSouth shall complete 0+ intraLATA toll calls.

10.3.2.1.3 BellSouth shall process calls that are billed to ACCESS Integrated end user's calling card that can be validated by BellSouth.

10.3.2.1.4 BellSouth shall complete person-to-person calls.

10.3.2.1.5 BellSouth shall complete collect calls.

10.3.2.1.6 BellSouth shall provide the capability for callers to bill to a third party and complete such calls.

10.3.2.1.7 BellSouth shall complete station-to-station calls.

10.3.2.1.8 BellSouth shall process emergency calls.

10.3.2.1.9 BellSouth shall process Busy Line Verify and Emergency Line Interrupt requests.

10.3.2.1.10 BellSouth shall process emergency call trace, as they do for their End users prior to the Effective Date. Call must originate from a 911 provider.

10.3.2.1.11 BellSouth shall process operator-assisted directory assistance calls.

10.3.2.1.12 BellSouth shall adhere to equal access requirements**,** providing ACCESS Integrated local end users the same IXC access as provided to BellSouth end users.

10.3.2.1.13 BellSouth shall exercise at least the same level of fraud control in providing Operator Service to ACCESS Integrated that BellSouth provides for its own operator service.

10.3.2.1.14 BellSouth shall perform Billed Number Screening when handling Collect, Person-to-Person, and Billed-to-Third-Party calls.

10.3.2.1.15 BellSouth shall direct customer account and other similar inquiries to the customer service center designated by ACCESS Integrated.

10.3.2.1.16 BellSouth shall provide a feed of customer call records in "EMI" format to ACCESS Integrated in accordance with CLEC ODUF standards specified in Attachment 7.

10.3.3 Interface Requirements

10.3.3.1 With respect to Operator Services for calls that originate on local switching capability provided by or on behalf of ACCESS Integrated, the interface requirements shall conform to the then current established system interface specifications for the platform used to provide Operator Service and the interface shall conform to industry standards.

10.4 Directory Assistance Service

10.4.1 Definition. Directory Assistance Service provides local end user telephone number listings with the option to complete the call at the callers direction separate and distinct from local switching.

10.4.2 Requirements

10.4.3 Directory Assistance Service shall provide up to two listing requests per call. If available and if requested by ACCESS Integrated's end user, BellSouth shall provide caller-optional directory assistance call completion service at rates contained in this Attachment to one of the provided listings, equal to that which BellSouth provides its end users. If not available, ACCESS Integrated may request such requirement pursuant to the Bona Fide Request/New Business Process as set forth in General Terms and Conditions.

10.4.4 Directory Assistance Service Updates

10.4.4.1 BellSouth shall update end user listings changes daily. These changes include:

10.4.4.1.1 New end user connections: BellSouth will provide service to ACCESS Integrated that is equal to the service it provides to itself and its end users;

10.4.4.1.2 End user disconnections: BellSouth will provide service to ACCESS Integrated that is equal to the service it provides to itself and its end users; and

10.4.4.1.3 End user address changes: BellSouth will provide service to ACCESS Integrated that is equal to the service it provides to itself and its end users;

10.4.4.1.4 These updates shall also be provided for non-listed and non-published numbers for use in emergencies.

10.4.5 Branding for Operator Call Processing and Directory Assistance

10.4.5.1 The BellSouth Operator Systems Branding Feature provides a definable announcement to ACCESS Integrated end users using Directory Assistance (DA)/Operator Call Processing (OCP) prior to placing them in queue or connecting them to an available operator or automated operator system. This feature allows ACCESS Integrated to have its calls custom branded with ACCESS Integrated's name on whose behalf BellSouth is providing Directory Assistance and/or Operator Call Processing. Rates for Custom Branding, Operator Call Process and Directory Assistance are set forth in this Attachment.

10.4.5.2 BellSouth offers four service levels of branding to ACCESS Integrated when ordering Directory Assistance and/or Operator Call Processing.

10.4.5.2.1 Service Level 1 - BellSouth Branding

10.4.5.2.2 Service Level 2 - Unbranded

10.4.5.2.3 Service Level 3 - Custom Branding

10.4.5.2.4 Service Level 4 - Self Branding (applicable only to ACCESS Integrated for Resale or use with an Unbundled Port when routing to an operator service provider other than BellSouth).

10.4.6 For Resellers and Use with an Unbundled Port

10.4.6.1 BellSouth Branding is the Default Service Level.

10.4.6.2 Unbranding, Custom Branding, and Self Branding require ACCESS Integrated to order selective routing for each originating BellSouth end office identified by ACCESS Integrated. Rates for Selective Routing are set forth in this Attachment.

10.4.6.3 Customer Branding and Self Branding require ACCESS Integrated to order dedicated trunking from each BellSouth end office identified by ACCESS Integrated, to either the BellSouth Traffic Operator Position System (TOPS) or ACCESS Integrated Operator Service Provider. Rates for trunks are set forth in applicable BellSouth tariffs.

10.4.6.4 Unbranding - Unbranded Directory Assistance and/or Operator Call Processing calls ride common trunk groups provisioned by BellSouth from those end offices identified by ACCESS Integrated to the BellSouth TOPS. These calls are routed to "No Announcement."

10.4.7 For Facilities Based Carriers

10.4.7.1 All Service Levels require ACCESS Integrated to order dedicated trunking from their end office(s) point of interface to the BellSouth TOPS Switches. Rates for trunks are set forth in applicable BellSouth tariffs.

10.4.7.2 Customized Branding includes charges for the recording of the branding announcement and the loading of the audio units in each TOPS Switch, IVS and NAV equipment for which ACCESS Integrated requires service.

10.4.8 Directory Assistance customized branding uses:

10.4.8.1 the recording of the name;

10.4.8.2 the front-end loading of the Digital Recorded Announcement Machine (DRAM) in each TOPS switch.

10.4.9 Operator Call Processing customized branding uses:

10.4.9.1 the recording of the name;

10.4.9.2 the front-end loading of the DRAM in the TOPS Switch;

10.4.9.3 the back-end loading in the audio units in the Automated Alternate Billing System (AABS) in the Interactive Voice Subsystem (IVS);

10.4.9.4 the 0- automation loading for the audio units in the Enhanced Billing and Access Service (EBAS) in the Network Applications Vehicle (NAV).

10.4.9.5 BellSouth will provide to ACCESS Integrated purchasing local BellSouth switching and reselling BellSouth local exchange service, selective routing of

calls to a requested directory assistance services platform or operator services platform. ACCESS Integrated end users may use the same dialing arrangements as BellSouth end users, but obtain a ACCESS Integrated branded service.

10.5 Directory Assistance Database Service (DADS)

10.5.1 BellSouth shall make its Directory Assistance Database Service (DADS) available solely for the expressed purpose of providing Directory Assistance type services to ACCESS Integrated end users. The term "end user" denotes any entity which obtains Directory Assistance type services for its own use from a DADS customer. Directory Assistance type service is defined as Voice Directory Assistance (DA Operator assisted and Electronic Directory Assistance (Data System assisted)). ACCESS Integrated agrees that Directory Assistance Database Service (DADS) will not be used for any purpose which violates federal or state laws, statutes, regulatory orders or tariffs. Except for the permitted users, ACCESS Integrated agrees not to disclose DADS to others and shall provide due care in providing for the security and confidentiality of DADS. Further, ACCESS Integrated authorizes the inclusion of ACCESS Integrated Directory Assistance listings in the BellSouth Directory Assistance products.

10.5.2 BellSouth shall provide ACCESS Integrated initially with a base file of subscriber listings which reflect all listing change activity occurring since ACCESS Integrated's most recent update via magnetic tape, and subsequently using electronic connectivity such as Network Data Mover to be developed mutually by ACCESS Integrated and BellSouth. ACCESS Integrated agrees to assume the costs associated with CONNECT: Direct ^{TM} connectivity, which will vary depending upon volume and mileage.

10.5.3 BellSouth will require approximately one month after receiving an order to prepare the Base File. BellSouth will provide daily updates which will reflect all listing change activity occurring since CLEC's most recent update. BellSouth shall provide updates to ACCESS Integrated on a Business, Residence, or combined Business and Residence basis. ACCESS Integrated agrees that the updates shall be used solely to keep the information current. Delivery of Daily Updates will commence the day after ACCESS Integrated receives the Base File.

10.5.4 BellSouth is authorized to include ACCESS Integrated Directory Assistance Listing Information in its Directory Assistance Database Service (DADS). Any other use by BellSouth of ACCESS Integrated Directory Assistance Listing Information is not authorized and with the exception of a request for DADS, BellSouth shall refer any request for such information to ACCESS Integrated.

10.5.5 Rates for DADS are as set forth in this Attachment.

10.6 Direct Access to Directory Assistance Service

10.6.1 Direct Access to Directory Assistance Service (DADAS) will provide ACCESS Integrated's directory assistance operators with the ability to search all available BellSouth's subscriber listings using the Directory Assistance search format. Subscription to DADAS will allow ACCESS Integrated to utilize its own switch, operator workstations and optional audio subsystems.

10.6.2 BellSouth will provide DADAS from its DA location. ACCESS Integrated will access the DADAS system via a telephone company provided point of availability. ACCESS Integrated has the responsibility of providing the physical links required to connect to the point of availability. These facilities may be purchased from the telephone company as rates and charges billed separately from the charges associated with this offering.

10.6.3 A specified interface to each ACCESS Integrated subsystem will be provided by BellSouth. Interconnection between ACCESS Integrated's system and a specified BellSouth location will be pursuant to the use of ACCESS Integrated owned or ACCESS Integrated leased facilities and shall be appropriate sized based upon the volume of queries being generated by ACCESS Integrated.

10.6.4 The specifications for the three interfaces necessary for interconnection are available in the following documents:

10.6.4.1 DADAS to Subscriber Operator Position System—Northern Telecom Document CSI-2300-07; Universal Gateway/ Position Message Interface Format Specification;

10.6.4.2 DADAS to Subscriber Switch—Northern Telecom Document Q210-1 Version A107; NTDMS/CCIDAS System Application Protocol; and AT&T Document 250-900-535 Operator Services Position System Listing Service and Application Call Processing Data Link Interface Specification;

10.6.4.3 DADAS to Audio Subsystem (Optional)—Directory One Call Control to Audio Response Unit system interface specifications are available through Northern Telecom as a licensed access protocol—Northern Telecom Document 355-004424 and Gateway/Interactive Voice subsystem Protocol Specification.

10.6.5 Rates for DADAS are as set forth in this Attachment.

10.7 **Automatic Location Identification/Data Management System (ALI/DMS)**

10.7.1 The ALI/DMS Database contains end user information (including name, address, telephone information, and sometimes special information from the local service provider or end user) used to determine to which Public Safety Answering Point (PSAP) to route the call. The ALI/DMS database is used to provide more routing

flexibility for E911 calls than Basic 911. BellSouth shall provide the Emergency Services Database in accordance with the following:

10.7.2 Technical Requirements

10.7.2.1 BellSouth shall offer ACCESS Integrated a data link to the ALI/DMS database or permit ACCESS Integrated to provide its own data link to the ALI/DMS database. BellSouth shall provide error reports from the ALI/DMS database to ACCESS Integrated immediately after ACCESS Integrated inputs information into the ALI/DMS database. Alternately, ACCESS Integrated may utilize BellSouth, to enter end user information into the data base on a demand basis, and validate end user information on a demand basis.

10.7.2.2 The ALI/DMS database shall contain the following end user information:

10.7.2.2.1 Name;

10.7.2.2.2 Address;

10.7.2.2.3 Telephone number; and

10.7.2.2.4 Other information as appropriate (e.g., whether a end user is blind or deaf or has another disability).

10.7.2.3 When BellSouth is responsible for administering the ALI/DMS database in its entirety, ported number NXXs entries for the ported numbers should be maintained unless ACCESS Integrated requests otherwise and shall be updated if ACCESS Integrated requests, provided ACCESS Integrated supplies BellSouth with the updates.

10.7.2.4 When Remote Call Forwarding (RCF) is used to provide number portability to the local end user and a remark or other appropriate field information is available in the database, the shadow or “forwarded-to” number and an indication that the number is ported shall be added to the customer record.

10.7.2.5 If BellSouth is responsible for configuring PSAP features (for cases when the PSAP or BellSouth supports an ISDN interface) it shall ensure that CLASS Automatic Recall (Call Return) is not used to call back to the ported number. Although BellSouth currently does not have ISDN interface, BellSouth agrees to comply with this requirement once ISDN interfaces are in place.

10.7.3 Interface Requirements

The interface between the E911 Switch or Tandem and the ALI/DMS database for ACCESS Integrated end users shall meet industry standards.

10.8 Rates

The prices that ACCESS Integrated shall pay to BellSouth for Network Elements and Other Services are set forth in Exhibit C to this Attachment.

11. Calling Name (CNAM) Database Service

11.1 All of the negotiated rates, terms and conditions set forth in this Section pertain to the provision of CNAM.

11.2 The Agreement for Calling Name (CNAM) with standard pricing is included as Exhibit B to this Attachment. ACCESS Integrated must provide to its account manager a written request with a requested activation date to activate this service. If ACCESS Integrated is interested in requesting CNAM with volume and term pricing, ACCESS Integrated must contact its account manager to request a separate CNAM volume and term Agreement.

11.3 SCPs/Databases shall be equal to or better than all of the requirements for SCPs/Databases set forth in the applicable industry standard technical references.

11.4 Service Creation Environment and Service Management System (SCE/SMS) Advanced Intelligent Network (AIN) Access

11.4.1 BellSouth's Service Creation Environment and Service Management System (SCE/SMS) Advanced Intelligent Network (AIN) Access shall provide ACCESS Integrated the capability that will allow ACCESS Integrated and other third parties to create service applications in a BellSouth Service Creation Environment and deploy those applications in a BellSouth SMS to a BellSouth SCP. The third party service applications interact with AIN triggers provisioned on a BellSouth SSP.

11.4.2 BellSouth's SCE/SMS AIN Access shall provide access to SCE hardware, software, testing and technical support (e.g., help desk, system administrator) resources available to ACCESS Integrated. Scheduling procedures shall provide ACCESS Integrated equivalent priority to these resources.

11.4.2 BellSouth SCP shall partition and protect ACCESS Integrated service logic and data from unauthorized access, execution or other types of compromise.

11.4.3 When ACCESS Integrated selects SCE/SMS AIN Access, BellSouth shall provide training, documentation, and technical support to enable ACCESS Integrated to use BellSouth's SCE/SMS AIN Access to create and administer applications. Training, documentation, and technical support will address use of SCE and SMS access and administrative functions, but will not include support for the creation of a specific service application.

11.4.4 When ACCESS Integrated selects SCE/SMS AIN Access, BellSouth shall provide for a secure, controlled access environment in association with its internal use of

AIN components. ACCESS Integrated access will be provided via remote data connection (e.g., dial-in, ISDN).

11.4.5 When ACCESS Integrated selects SCE/SMS AIN Access, BellSouth shall allow ACCESS Integrated to download data forms and/or tables to BellSouth SCP via BellSouth SMS without intervention from BellSouth (e.g., service customization and end user subscription).

11.5 Rates

The prices that ACCESS Integrated shall pay to BellSouth for Network Elements and Other Services are set forth in Exhibit C to this Attachment.

12. Basic 911 and E911

12.1 All of the negotiated terms and conditions set forth in this Section pertain to the provision of Basic 911 and E911.

12.2 If ACCESS Integrated orders network elements and other services, then ACCESS Integrated is also responsible for providing E911 to its end users. BellSouth agrees to offer access to the 911/E911 network pursuant to the following terms and conditions set forth in this Attachment.

12.3 Definition

12.4 Basic 911 and E911 is an additional requirement that provides a caller access to the applicable emergency service bureau by dialing a 3-digit universal telephone number (911).

12.5 Requirements

12.5.1 Basic 911 Service Provisioning. For Basic 911 service, BellSouth will provide to ACCESS Integrated a list consisting of each municipality that subscribes to Basic 911 service. The list will also provide, if known, the E911 conversion date for each municipality and, for network routing purposes, a ten-digit directory number representing the appropriate emergency answering position for each municipality subscribing to 911. ACCESS Integrated will be required to arrange to accept 911 calls from its end users in municipalities that subscribe to Basic 911 service and translate the 911 call to the appropriate 10-digit directory number as stated on the list provided by BellSouth. ACCESS Integrated will be required to route that call to BellSouth at the appropriate tandem or end office. When a municipality converts to E911 service, ACCESS Integrated will be required to discontinue the Basic 911 procedures and being using E911 procedures.

12.5.2 E911 Service Provisioning. For E911 service, ACCESS Integrated will be required to install a minimum of two dedicated trunks originating from the ACCESS Integrated serving wire center and terminating to the appropriate E911 tandem. The dedicated trunks shall be, at a minimum, DS-0 level trunks configured either as a 2-wire analog interface or as part of a digital (1.544 Mb/s) interface. Either configuration shall use CAMA-type signaling with multifrequency ("MF") pulsing that will deliver automatic number identification ("ANI") with the voice portion of the call. If the user interface is digital, MF pulses, as well as other AC signals, shall be encoded per the u-255 Law convention. ACCESS Integrated will be required to provide BellSouth daily updates to the E911 database. ACCESS Integrated will be required to forward 911 calls to the appropriate E911 tandem, along with ANI, based upon the current E911 end office to tandem homing arrangement as provided by BellSouth. If the

E911 tandem trunks are not available, ACCESS Integrated will be required to route the call to a designated 7-digit local number residing in the appropriate Public Service Answering Point ("PSAP"). This call will be transported over BellSouth's interoffice network and will not carry the ANI of the calling party. ACCESS Integrated shall be responsible for providing BellSouth with complete and accurate data for submission to the 911/E911 database for the purpose of providing 911/E911 to its end users.

12.5.3 Rates. Charges for 911/E911 service are borne by the municipality purchasing the service. BellSouth will impose no charge on ACCESS Integrated beyond applicable charges for BellSouth trunking arrangements.

12.5.4 Basic 911 and E911 functions provided to ACCESS Integrated shall be at least at parity with the support and services that BellSouth provides to its end users for such similar functionality.

12.5.5 Detailed Practices and Procedures. The detailed practices and procedures contained in the E911 Local Exchange Carrier Guide For Facility-Based Providers as amended from time to time during the term of this Agreement will determine the appropriate practices and procedures for BellSouth and ACCESS Integrated to follow in providing 911/E911 services.

13. True-Up

This section applies only to Tennessee and other rates that are interim or expressly subject to true-up under this attachment.

13.1 The interim prices for Network Elements and Other Services and Local Interconnection shall be subject to true-up according to the following procedures:

13.2 The interim prices shall be trued-up, either up or down, based on final prices determined either by further agreement between the Parties, or by a final order (including any appeals) of the Commission which final order meets the criteria of (3) below. The Parties shall implement the true-up by comparing the actual volumes and demand for each item, together with interim prices for each item, with the final prices determined for each item. Each Party shall keep its own records upon which the true-up can be based, and any final payment from one Party to the other shall be in an amount agreed upon by the Parties based on such records. In the event of any disagreement as between the records or the Parties regarding the amount of such true-up, the Parties agree that the body having jurisdiction over the matter shall be called upon to resolve such differences, or the Parties may mutually agree to submit the matter to the Dispute Resolution process in accordance with the provisions of Section 16 of the General Terms and Conditions and Attachment 1 of the Agreement.

13.3 The Parties may continue to negotiate toward final prices, but in the event that no such Agreement is reached within nine (9) months, either Party may petition the Commission to resolve such disputes and to determine final prices for each item. Alternatively, upon mutual agreement, the Parties may submit the matter to the Dispute Resolution Process set forth in Section 16 of the General

Terms and Conditions and Attachment 1 of the Agreement, so long as they file the resulting Agreement with the Commission as a "negotiated Agreement" under Section 252(e) of the Act.

13.4 A final order of this Commission that forms the basis of a true-up shall be the final order as to prices based on appropriate cost studies, or potentially may be a final order in any other Commission proceeding which meets the following criteria:

(a) BellSouth and ACCESS Integrated are entitled to be a full Party to the proceeding;

(b) It shall apply the provisions of the federal Telecommunications Act of 1996, including but not limited to Section 252(d)(1) (which contains pricing standards) and all then-effective implementing rules and regulations; and,

(c) It shall include as an issue the geographic deaveraging of network element and other services prices, which deaveraged prices, if any are required by said final order, shall form the basis of any true-up.

EXHIBIT A

LINE INFORMATION DATA BASE (LIDB)

STORAGE AGREEMENT

I. SCOPE

A. This Agreement sets forth the terms and conditions pursuant to which BellSouth agrees to store in its LIDB certain information at the request of ACCESS Integrated and pursuant to which BellSouth, its LIDB customers and ACCESS Integrated shall have access to such information. ACCESS Integrated understands that BellSouth provides access to information in its LIDB to various telecommunications service providers pursuant to applicable tariffs and agrees that information stored at the request of ACCESS Integrated, pursuant to this Agreement, shall be available to those telecommunications service providers. The terms and conditions contained in the attached Addendum(s) are hereby made a part of this Agreement as if fully incorporated herein.

B. LIDB is accessed for the following purposes:

1. Billed Number Screening

2. Calling Card Validation

3. Fraud Control

C. BellSouth will provide seven days per week, 24-hours per day, fraud monitoring on Calling Cards, bill-to-third and collect calls made to numbers in BellSouth's LIDB, provided that such information is included in the LIDB query. BellSouth will establish fraud alert thresholds and will notify ACCESS Integrated of fraud alerts so that ACCESS Integrated may take action it deems appropriate. ACCESS Integrated understands and agrees BellSouth will administer all data stored in the LIDB, including the data provided by ACCESS Integrated pursuant to this Agreement, in the same manner as BellSouth's data for BellSouth's end user customers. BellSouth shall not be responsible to ACCESS Integrated for any lost revenue which may result from BellSouth's administration of the LIDB pursuant to its established practices and procedures as they exist and as they may be changed by BellSouth in its sole discretion from time to time.

ACCESS Integrated understands that BellSouth currently has in effect numerous billing and collection agreements with various interexchange carriers and billing clearing houses. ACCESS Integrated further understands that these billing and collection customers of BellSouth query BellSouth's LIDB to determine whether to accept various billing options from end users. Additionally, ACCESS

Integrated understands that presently BellSouth has no method to differentiate between BellSouth's own billing and line data in the LIDB and such data which it includes in the LIDB on ACCESS Integrated's behalf pursuant to this Agreement. Therefore, until such time as BellSouth can and does implement in its LIDB and its supporting systems the means to differentiate ACCESS Integrated's data from BellSouth's data and the Parties to this Agreement execute appropriate amendments hereto, the following terms and conditions shall apply:

(a) ACCESS Integrated agrees that it will accept responsibility for telecommunications services billed by BellSouth for its billing and collection customers for ACCESS Integrated's end user accounts which are resident in LIDB pursuant to this Agreement. ACCESS Integrated authorizes BellSouth to place such charges on ACCESS Integrated's bill from BellSouth and agrees that it shall pay all such charges. Charges for which ACCESS Integrated hereby takes responsibility include, but are not limited to, collect and third number calls.

(b) Charges for such services shall appear on a separate BellSouth bill page identified with the name of the entity for which BellSouth is billing the charge.

(c) ACCESS Integrated shall have the responsibility to render a billing statement to its end users for these charges, but ACCESS Integrated's obligation to pay BellSouth for the charges billed shall be independent of whether ACCESS Integrated is able or not to collect from ACCESS Integrated's end users.

(d) BellSouth shall not become involved in any disputes between ACCESS Integrated and the entities for which BellSouth performs billing and collection. BellSouth will not issue adjustments for charges billed on behalf of an entity to ACCESS Integrated. It shall be the responsibility of ACCESS Integrated and the other entity to negotiate and arrange for any appropriate adjustments.

II. TERM

This Agreement will be effective as of _____, and will continue in effect for one year, and thereafter may be continued until terminated by either Party upon thirty (30) days written notice to the other Party.

III. FEES FOR SERVICE AND TAXES

A. ACCESS Integrated will not be charged a fee for storage services provided by BellSouth to ACCESS Integrated, as described in Section I of this Agreement.

B. Sales, use and all other taxes (excluding taxes on BellSouth's income) determined by BellSouth or any taxing authority to be due to any federal, state or local taxing jurisdiction with respect to the provision of the service set forth herein will be paid by ACCESS Integrated. ACCESS Integrated shall have the right to have BellSouth contest with the imposing jurisdiction, at ACCESS Integrated's expense, any such taxes that ACCESS Integrated deems are improperly levied.

IV. INDEMNIFICATION

To the extent not prohibited by law, each Party will indemnify the other and hold the other harmless against any loss, cost, claim, injury, or liability relating to or arising out of negligence or willful misconduct by the indemnifying Party or its agents or contractors in connection with the indemnifying Party's provision of services, provided, however, that any indemnity for any loss, cost, claim, injury or liability arising out of or relating to errors or omissions in the provision of services under this Agreement shall be limited as otherwise specified in this Agreement. The indemnifying Party under this Section agrees to defend any suit brought against the other Party for any such loss, cost, claim, injury or liability. The indemnified Party agrees to notify the other Party promptly, in writing, of any written claims, lawsuits, or demands for which the other Party is responsible under this Section and to cooperate in every reasonable way to facilitate defense or settlement of claims. The indemnifying Party shall not be liable under this Section for settlement by the indemnified Party of any claim, lawsuit, or demand unless the defense of the claim, lawsuit, or demand has been tendered to it in writing and the indemnifying Party has unreasonably failed to assume such defense.

V. LIMITATION OF LIABILITY

Neither Party shall be liable to the other Party for any lost profits or revenues or for any indirect, incidental or consequential damages incurred by the other Party arising from this Agreement or the services performed or not performed hereunder, regardless of the cause of such loss or damage.

VI. MISCELLANEOUS

A. It is understood and agreed to by the Parties that BellSouth may provide similar services to other companies.

A. All terms, conditions and operations under this Agreement shall be performed in accordance with, and subject to, all applicable local, state or federal legal and regulatory tariffs, rulings, and other requirements of the federal courts, the U. S. Department of Justice and state and federal regulatory agencies. Nothing in this

Agreement shall be construed to cause either Party to violate any such legal or regulatory requirement and either Party's obligation to perform shall be subject to all such requirements.

C. ACCESS Integrated agrees to submit to BellSouth all advertising, sales promotion, press releases, and other publicity matters relating to this Agreement wherein BellSouth's corporate or trade names, logos, trademarks or service marks or those of BellSouth's affiliated companies are mentioned or language from which the connection of said names or trademarks therewith may be inferred or implied; and ACCESS Integrated further agrees not to publish or use advertising, sales promotions, press releases, or publicity matters without BellSouth's prior written approval.

D. This Agreement constitutes the entire Agreement between ACCESS Integrated and BellSouth which supersedes all prior Agreements or contracts, oral or written representations, statements, negotiations, understandings, proposals and undertakings with respect to the subject matter hereof.

E. Except as expressly provided in this Agreement, if any part of this Agreement is held or construed to be invalid or unenforceable, the validity of any other Section of this Agreement shall remain in full force and effect to the extent permissible or appropriate in furtherance of the intent of this Agreement.

F. Neither Party shall be held liable for any delay or failure in performance of any part of this Agreement for any cause beyond its control and without its fault or negligence, such as acts of God, acts of civil or military authority, government regulations, embargoes, epidemics, war, terrorist acts, riots, insurrections, fires, explosions, earthquakes, nuclear accidents, floods, strikes, power blackouts, volcanic action, other major environmental disturbances, unusually severe weather conditions, inability to secure products or services of other persons or transportation facilities, or acts or omissions of transportation common carriers.

G. This Agreement shall be deemed to be a contract made under the laws of the State of Georgia, and the construction, interpretation and performance of this Agreement and all transactions hereunder shall be governed by the domestic law of such State.

FACILITIES BASED ADDENDUM

TO LINE INFORMATION DATA BASE (LIDB)

STORAGE AGREEMENT

This is a Facilities Based Addendum to the Line Information Data Base Storage Agreement dated _____, between BellSouth Telecommunications, Inc. ("BellSouth"), and _____("ACCESS Integrated"), effective the _____ day of _____, _____.

I. GENERAL

This Addendum sets forth the terms and conditions for ACCESS Integrated's provision of billing number information to BellSouth for inclusion in BellSouth's LIDB. BellSouth will store in its LIDB the billing number information provided by ACCESS Integrated, and BellSouth will provide responses to on-line, call-by-call queries to this information for purposes specified in Section I.B. of the Agreement.

II. DEFINITIONS

A. Billing number - a number that ACCESS Integrated creates for the purpose of identifying an account liable for charges. This number may be a line or a special billing number.

B. Line number - a ten digit number that identifies a telephone line administered by ACCESS Integrated.

C. Special billing number - a ten digit number that identifies a billing account established by ACCESS Integrated.

D. Calling Card number - a billing number plus PIN number.

E. PIN number - a four digit security code assigned by ACCESS Integrated which is added to a billing number to compose a fourteen digit calling card number.

F. Toll billing exception indicator - associated with a billing number to indicate that it is considered invalid for billing of collect calls or third number calls or both, by ACCESS Integrated.

G. Billed Number Screening - refers to the activity of determining whether a toll billing exception indicator is present for a particular billing number.

H. Calling Card Validation - refers to the activity of determining whether a particular calling card number exists as stated or otherwise provided by a caller.

I. Billing number information - information about billing number, Calling Card number and toll billing exception indicator provided to BellSouth by ACCESS Integrated.

III. RESPONSIBILITIES OF PARTIES

A. ACCESS Integrated will provide its billing number information to BellSouth's LIDB each business day by a method that has been mutually agreed upon by both Parties.

B. BellSouth will store in its LIDB the billing number information provided by ACCESS Integrated. Under normal operating conditions, BellSouth shall include ACCESS Integrated's billing number information in its LIDB no later than two business days following BellSouth's receipt of such billing number information, provided that BellSouth shall not be held responsible for any delay or failure in performance to the extent such delay or failure is caused by circumstances or conditions beyond BellSouth's reasonable control. BellSouth will store in its LIDB an unlimited volume of ACCESS Integrated's working telephone numbers.

C. BellSouth will provide responses to on-line, call-by-call queries to the stored information for the specific purposes listed in the next paragraph.

D. BellSouth is authorized to use the billing number information provided by ACCESS Integrated to perform the following functions for authorized users on an on-line basis:

1. Validate a 14 digit Calling Card number where the first 10 digits are a line number or special billing number assigned by ACCESS Integrated, and where the last four digits (PIN) are a security code assigned by ACCESS Integrated.

2. Determine whether ACCESS Integrated or the subscriber has identified the billing number as one which should not be billed for collect or third number calls, or both.

E. ACCESS Integrated will provide its own billing number information to BellSouth for storage and to be used for Billed Number Screening and Calling Card

Validation. ACCESS Integrated will arrange and pay for transport of updates to BellSouth.

IV. COMPLIANCE

Unless expressly authorized in writing by ACCESS Integrated, all billing number information provided pursuant to this Addendum shall be used for no purposes other than those set forth in this Addendum.

EXHIBIT B

CALLING NAME DELIVERY (CNAM) DATABASE SERVICES

1. Definitions

For the purpose of this Attachment, the following terms shall be defined as:

CALLING NAME DELIVERY DATABASE SERVICE (CNAM) - The ability to associate a name with the calling party number, allowing the end user subscriber (to which a call is being terminated) to view the calling party's name before the call is answered. This service also provides ACCESS Integrated the opportunity to load and store its subscriber names in the BellSouth CNAM SCPs.

CALLING PARTY NUMBER (CPN) - The number of the calling party that is delivered to the terminating switch using common channel signaling system 7 (CCS7) technology, and that is contained in the Initial Address Message (IAM) portion of the CCS7 call setup.

COMMON CHANNEL SIGNALING SYSTEM 7 (CCS7) - A network signaling

technology in which all signaling information between two or more nodes is transmitted over high-speed data links, rather than over voice circuits.

SERVICE CONTROL POINTs (SCPs) - The real-time data base systems that contain the names to be provided in response to queries received from CNAM SSPs.

SERVICE MANAGEMENT SYSTEM (SMS) - The main operations support system of CNAM DATABASE SERVICE. CNAM records are loaded into the SMS, which in turn downloads into the CNAM SCP.

SERVICE SWITCHING POINTs (SSPs) - Features of computerized switches in the telephone network that determine that a terminating line has subscribed to CNAM service, and then communicate with CNAM SCPs in order to provide the name associated with the calling party number.

SUBSYSTEM NUMBER (SSN) - The address used in the Signaling Connection Control Part (SCCP) layer of the SS7 protocol to designate an application at an end signaling point. A SSN for CNAM at the end office designates the CNAM application within the end office. BellSouth uses the CNAM SSN of 232.

2. Attachment

2.1 This Attachment contains the terms and conditions where BellSouth will provide to the ACCESS Integrated access to the BellSouth CNAM SCP for query or record storage purposes.

2.2 ACCESS Integrated shall submit to BellSouth a notice of its intent to access and utilize BellSouth CNAM Database Services pursuant to the terms and conditions of this Attachment. Said notice shall be in writing, no less than 60 days prior to ACCESS Integrated's access to BellSouth's CNAM Database Services and shall be addressed to ACCESS Integrated's Account Manager.

3. Physical Connection and Compensation

3.1 BellSouth's provision of CNAM Database Services to ACCESS Integrated requires interconnection from ACCESS Integrated to BellSouth CNAM Service Control Points (SCPs). Such interconnections shall be established pursuant to Attachment 3 of this Agreement . The appropriate charge for access to and use of the BellSouth CNAM Database service shall be as set forth in this Attachment.

3.2 In order to formulate a CNAM query to be sent to the BellSouth CNAM SCP, ACCESS Integrated shall provide its own CNAM SSP. ACCESS Integrated's CNAM SSPs must be compliant with TR-NWT-001188, "CLASS Calling Name Delivery Generic Requirements".

3.3 If ACCESS Integrated elects to access the BellSouth CNAM SCP via a third party CCS7 transport provider, the third party CCS7 provider shall interconnect with the BellSouth CCS7 network according to BellSouth's Common Channel Signaling Interconnection Guidelines and Telcordia (formerly BellCore)'s CCS Network Interface Specification document, TR-TSV-000905. In addition, the third party provider shall establish CCS7 interconnection at the BellSouth Local Signal Transfer Points (LSTPs) serving the BellSouth CNAM SCPs that ACCESS Integrated desires to query.

3.4 Out-Of-Region Customers

If the customer queries the BellSouth CNAM SCP via a third party national SS7 transport provider, the third party SS7 provider shall interconnect with the BellSouth CCS7 network according to BellSouth's Common Channel Signaling Interconnection Guidelines and Telcordia's (formerly BellCore's) CCS Network Interface Specification document, TR-TSV-000905. In addition, the third party provider shall establish SS7 interconnection at one or more of the BellSouth Gateway Signal Transfer Points (STPs). The payment of all costs associated with the transport of SS7 signals via a third party will be established by mutual

agreement of the Parties in writing and shall, by this reference become an integral part of this Agreement.

4. CNAM Record Initial Load and Updates

4.1 The mechanism to be used by ACCESS Integrated for initial CNAM record load and/or updates shall be determined by mutual agreement. The initial load and all updates shall be provided by ACCESS Integrated in the BellSouth specified format and shall contain records for every working telephone number that can originate phone calls. It is the responsibility of ACCESS Integrated to provide accurate information to BellSouth on a current basis.

4.2 Updates to the SMS shall occur no less than once a week, reflect service order activity affecting either name or telephone number, and involve only record additions, deletions or changes.

4.3 ACCESS Integrated CNAM records provided for storage in the BellSouth CNAM SCP shall be available, on a SCP query basis only, to all Parties querying the BellSouth CNAM SCP. Further, CNAM service shall be provided by each Party consistent with state and/or federal regulation.

BELLSOUTH / ACCESS INTEGRATED RATES
NETWORK ELEMENTS
AND OTHER SERVICES

DESCRIPTION	USOC	AL	FL	GA	KY	LA	MS	NC	SC	TN
NIDs										
NID (all types), per month	UNDAX	NA	$1.08	NA	$1.80	NA	NA	$0.52	NA	$0.56
Installation of 2-Wire/4Wire CLEC NID	UNDAX									
NRC - 1st	UNDAX	NA	$70.32	NA	NA	NA	NA	NA	NA	NA
NRC - Add'l	UNDAX	NA	$54.35	NA	NA	NA	NA	NA	NA	NA
NID to NID Cross Connect, 2-Wire or 4-Wire, NRC	UNDC2	NA	$6.15	NA	NA	NA	NA	NA	NA	NA
NID per 2-Wire Analog VG Loop, Per Month	UNDAX	$1.18	NA	$1.10	NA	$1.09	$1.22	$1.01	$1.13	NA
NRC - 1st	UNDAX	$1.44	NA	$2.10	NA	$2.02	$2.84	$1.42	$1.36	NA
NRC - Add'l	UNDAX	$1.44	NA	$2.10	NA	$2.02	$2.84	$1.42	$1.36	NA
NRC - Disconnect Charge - 1st	UNDAX	$1.44	NA	NA	NA	$2.01	$2.84	$1.23	NA	NA
NRC - Disconnect Charge - Add'l	UNDAX	$1.44	NA	NA	NA	$2.01	$2.84	$1.23	NA	NA
NRC - Incremental Charge - Manual Service Order - 1st	SOMAN	$27.37	NA	$18.94	NA	$18.14	$25.52	$26.94	$44.42	NA
NRC - Incremental Charge - Manual Service Order - Add'l	SOMAN	$12.97	NA	$8.42	NA	$8.06	$11.34	$12.76	$13.55	NA
NRC - Incremental Charge - Manual Service Order - Disconnect - 1st	SOMAN	$17.77	NA	NA	NA	$11.41	$16.06	NA	NA	NA
NID per 4-Wire Analog VG Loop, Per Month	UNDAX	$1.30	NA	$1.21	NA	$1.22	$1.34	$1.14	$1.25	NA
NRC - 1st	UNDAX	$1.44	NA	$2.10	NA	$2.02	$2.84	$1.42	$1.35	NA
NRC - Add'l	UNDAX	$1.44	NA	$2.10	NA	$2.02	$2.84	$1.42	$1.35	NA
NRC - Disconnect Charge - 1st	UNDAX	$1.44	NA	NA	NA	$2.01	$2.84	$1.20	NA	NA
NRC - Disconnect Charge - Add'l	UNDAX	$1.44	NA	NA	NA	$2.01	$2.84	$1.20	NA	NA
NRC - Incremental Charge - Manual Service Order - 1st	SOMAN	$27.37	NA	$18.94	NA	$18.14	$25.52	$26.94	$44.06	NA
NRC - Incremental Charge - Manual Service Order - Add'l	SOMAN	$12.97	NA	$8.42	NA	$8.06	$11.34	$12.76	$13.55	NA
NRC - Incremental Charge - Manual Service Order - Disconnect - 1st	SOMAN	$17.77	NA	NA	NA	$11.41	$16.06	NA	NA	NA
NID per 2-Wire ISDN Digital VG Loop, Per Month	UNDAX	$1.18	NA	$1.10	NA	$1.08	$1.22	$1.01	$1.13	NA
NRC - 1st	UNDAX	$1.44	NA	$2.10	NA	$2.02	$2.84	$1.42	$1.36	NA
NRC - Add'l	UNDAX	$1.44	NA	$2.10	NA	$2.02	$2.84	$1.42	$1.36	NA
NRC - Disconnect Charge - 1st	UNDAX	$1.44	NA	NA	NA	$2.01	$2.84	$1.23	NA	NA
NRC - Disconnect Charge - Add'l	UNDAX	$1.44	NA	NA	NA	$2.01	$2.84	$1.23	NA	NA
NRC - Incremental Charge - Manual Service Order - 1st	SOMAN	$27.37	NA	$18.94	NA	$18.14	$25.52	$26.94	$44.42	NA
NRC - Incremental Charge - Manual Service Order - Add'l	SOMAN	$12.97	NA	$8.42	NA	$8.06	$11.34	$12.76	$13.55	NA
NRC - Incremental Charge - Manual Service Order - Disconnect - 1st	SOMAN	$17.77	NA	NA	NA	$11.41	$16.06	NA	NA	NA
NID per 2-Wire Asymmetrical Dig Subscriber Line (ADSL) Loop, Per Mo.	UNDAX	$1.18	NA	$1.10	NA	$1.09	$1.22	$1.01	$1.13	NA
NRC - 1st	UNDAX	$1.44	NA	$2.10	NA	$2.02	$2.84	$1.42	$1.36	NA
NRC - Add'l	UNDAX	$1.44	NA	$2.10	NA	$2.02	$2.84	$1.42	$1.36	NA
NRC - Disconnect Charge - 1st	UNDAX	$1.44	NA	NA	NA	$2.01	$2.84	$1.23	NA	NA
NRC - Disconnect Charge - Add'l	UNDAX	$1.44	NA	NA	NA	$2.01	$2.84	$1.23	NA	NA
NRC - Incremental Charge - Manual Service Order - 1st	SOMAN	$27.37	NA	$18.94	NA	$18.14	$25.52	$26.94	$44.42	NA
NRC - Incremental Charge - Manual Service Order - Add'l	SOMAN	$12.97	NA	$8.42	NA	$8.06	$11.34	$12.76	$13.55	NA
NRC - Incremental Charge - Manual Service Order - Disconnect -1st	SOMAN	$17.77	NA	NA	NA	$11.41	$16.06	NA	NA	NA
NID per 2-Wire High Bit Rate Dig Subscriber Line (HDSL) Loop	UNDAX	$1.18	NA	$1.10	NA	$1.09	$1.22	$1.01	$1.13	NA
NRC - 1st	UNDAX	$1.44	NA	$2.10	NA	$2.02	$2.84	$1.42	$1.36	NA
NRC - Add'l	UNDAX	$1.44	NA	$2.10	NA	$2.02	$2.84	$1.42	$1.36	NA
NRC - Disconnect Charge - 1st	UNDAX	$1.44	NA	NA	NA	$2.01	$2.84	$1.23	NA	NA
NRC - Disconnect Charge - Add'l	UNDAX	$1.44	NA	NA	NA	$2.01	$2.84	$1.23	NA	NA
NRC - Incremental Charge - Manual Service Order - 1st	SOMAN	$27.37	NA	$18.94	NA	$18.14	$25.52	$26.94	$44.42	NA
NRC - Incremental Charge - Manual Service Order - Add'l	SOMAN	$12.97	NA	$8.42	NA	$8.06	$11.34	$12.76	$13.55	NA
NRC - Incremental Charge - Manual Service Order - Disconnect -1st	SOMAN	$17.77	NA	NA	NA	$11.41	$16.06	NA	NA	NA
NID per 4-Wire High Bit Rate Dig Subscriber Line (HDSL) Loop	UNDAX	$1.30	NA	$1.21	NA	$1.21	$1.34	$1.14	$1.25	NA
NRC - 1st	UNDAX	$1.44	NA	$2.10	NA	$2.02	$2.84	$1.42	$1.35	NA
NRC - Add'l	UNDAX	$1.44	NA	$2.10	NA	$2.02	$2.84	$1.42	$1.35	NA
NRC - Disconnect Charge - 1st	UNDAX	$1.44	NA	NA	NA	$2.01	$2.84	$1.20	NA	NA
NRC - Disconnect Charge - Add'l	UNDAX	$1.44	NA	NA	NA	$2.01	$2.84	$1.20	NA	NA
NRC - Incremental Charge - Manual Service Order - 1st	SOMAN	$27.37	NA	$18.94	NA	$18.14	$25.52	$26.94	$44.06	NA
NRC - Incremental Charge - Manual Service Order - Add'l	SOMAN	$12.97	NA	$8.42	NA	$8.06	$11.34	$12.76	$13.55	NA

BELLSOUTH / ACCESS INTEGRATED RATES
NETWORK ELEMENTS
AND OTHER SERVICES

DESCRIPTION	USOC	AL	FL	GA	KY	LA	MS	NC	SC	TN
NRC - Incremental Charge - Manual Service Order - Disconnect - 1st	SOMAN	$17.77	NA	NA	NA	$11.41	$16.06	NA	NA	NA
NID per 4-Wire 56 Kbps Dig Grade Loop	UNDAX	$1.30	NA	$1.21	NA	$1.21	$1.34	$1.14	$1.25	NA
NRC - 1st	UNDAX	$1.44	NA	$2.10	NA	$2.02	$2.84	$1.42	$1.35	NA
NRC - Add'l	UNDAX	$1.44	NA	$2.10	NA	$2.02	$2.84	$1.42	$1.35	NA
NRC - Disconnect Charge - 1st	UNDAX	$1.44	NA	NA	NA	$2.01	$2.84	$1.20	NA	NA
NRC - Disconnect Charge - Add'l	UNDAX	$1.44	NA	NA	NA	$2.01	$2.84	$1.20	NA	NA
NRC - Incremental Charge - Manual Service Order - 1st	SOMAN	$27.37	NA	$18.94	NA	$18.14	$25.52	$26.34	$44.06	NA
NRC - Incremental Charge - Manual Service Order - Add'l	SOMAN	$12.97	NA	$8.42	NA	$8.06	$11.34	$12.76	$13.55	NA
NRC - Incremental Charge - Manual Service Order - Disconnect - 1st	SOMAN	$17.77	NA	NA	NA	$11.41	$16.06	NA	NA	NA
NID per 4-Wire 64 Kbps Dig Grade Loop	UNDAX	$1.30	NA	$1.21	NA	$1.21	$1.34	$1.14	$1.25	NA
NRC - 1st	UNDAX	$1.44	NA	$2.10	NA	$2.02	$2.84	$1.42	$1.35	NA
NRC - Add'l	UNDAX	$1.44	NA	$2.10	NA	$2.02	$2.84	$1.42	$1.35	NA
NRC - Disconnect Charge - 1st	UNDAX	$1.44	NA	NA	NA	$2.01	$2.84	$1.20	NA	NA
NRC - Disconnect Charge - Add'l	UNDAX	$1.44	NA	NA	NA	$2.01	$2.84	$1.20	NA	NA
NRC - Incremental Charge - Manual Svc Ord - 1st	SOMAN	$27.37	NA	$18.94	NA	$18.14	$25.52	$26.94	$44.06	NA
NRC - Incremental Charge - Manual Svc Ord - Add'l	SOMAN	$12.97	NA	$8.42	NA	$8.06	$11.34	$12.76	$13.55	NA
NRC - Incremental Charge - Manual Svc Ord - Disconnect - 1st	SOMAN	$17.77	NA	NA	NA	$11.41	$16.06	NA	NA	NA
NID per 2-Wire Unbundled Copper Loop, per month	UNDAX	$1.55	$1.55	$1.55	$1.55	$1.55	$1.55	$1.55	$1.55	$1.55
NRC - 1st	UNDAX	$5.60	$5.60	$5.60	$5.60	$5.60	$5.60	$5.60	$5.60	$5.60
NRC - Add'l	UNDAX	$5.60	$5.60	$5.60	$5.60	$5.60	$5.60	$5.60	$5.60	$5.60
NRC - Disconnect Charge - 1st	UNDAX	NA	NA	NA	NA	NA	NA	NA	NA	NA
NRC - Disconnect Charge - Add'l	UNDAX	NA	NA	NA	NA	NA	NA	NA	NA	NA
NRC - Incremental Charge - Manual Svc. Ord - 1st	SOMAN	$47.00	$47.00	$47.00	$47.00	$47.00	$47.00	$47.00	$47.00	$47.00
NRC - Incremental Charge - Manual Svc. Ord - Add'l	SOMAN	$21.00	$21.00	$21.00	$21.00	$21.00	$21.00	$21.00	$21.00	$21.00
NRC - Incremental Charge - Manual Svc. Ord. - Disconnect	SOMAN	NA	NA	NA	NA	NA	NA	NA	NA	NA
Nonrecurring Charge - customer transfer, feature additions, changes (1)		$5.00	NA	NA	NA	NA	$5.00	NA	NA	NA
LOOP, EXCLUDING NID										
2-Wire Analog VG Loop (Standard), per month	TBD	NA	NA	NA	$18.20	NA	NA	NA	NA	NA
NRC - 1st		NA	NA	NA	$86.08	NA	NA	NA	NA	NA
NRC - Add'l		NA	NA	NA	$58.57	NA	NA	NA	NA	NA
2-Wire Analog VG Loop (Customized), per month	TBD	NA	NA	NA	$21.41	NA	NA	NA	NA	NA
NRC - 1st		NA	NA	NA	$236.75	NA	NA	NA	NA	NA
NRC - Add'l		NA	NA	NA	$177.10	NA	NA	NA	NA	NA
4-Wire Analog VG Loop (Standard), per month	TBD	NA	NA	NA	$26.38	NA	NA	NA	NA	NA
NRC - 1st		NA	NA	NA	$457.14	NA	NA	NA	NA	NA
NRC - Add'l		NA	NA	NA	$348.83	NA	NA	NA	NA	NA
2-Wire ISDN Digital Grade Loop (Standard), per month	TBD	NA	NA	NA	$29.65	NA	NA	NA	NA	NA
NRC - 1st		NA	NA	NA	$541.28	NA	NA	NA	NA	NA
NRC - Add'l		NA	NA	NA	$431.61	NA	NA	NA	NA	NA
2-Wire ADSL Loop (Standard), per month	TBD	NA	NA	NA	$10.63	NA	NA	NA	NA	NA
NRC - 1st		NA	NA	NA	$713.50	NA	NA	NA	NA	NA
NRC - Add'l		NA	NA	NA	$609.44	NA	NA	NA	NA	NA
2-Wire HDSL Loop (Standard), per month	TBD	NA	NA	NA	$7.40	NA	NA	NA	NA	NA
NRC - 1st		NA	NA	NA	$713.50	NA	NA	NA	NA	NA
NRC - Add'l		NA	NA	NA	$609.44	NA	NA	NA	NA	NA
4-Wire HDSL Loop (Standard), per month	TBD	NA	NA	NA	$9.70	NA	NA	NA	NA	NA
NRC - 1st		NA	NA	NA	$748.93	NA	NA	NA	NA	NA
NRC - Add'l		NA	NA	NA	$646.17	NA	NA	NA	NA	NA
LOOP, INCLUDING NID										

BELLSOUTH / ACCESS INTEGRATED RATES
NETWORK ELEMENTS
AND OTHER SERVICES

DESCRIPTION	USOC	AL	FL	GA	KY	LA	MS	NC	SC	TN
2-Wire Analog VG Loop										
RC - Statewide, per month	UEAL2	NA	$17.00	NA	NA	NA	NA	$16.71	NA	$18.00
RC - Zone 1, per month (Note 2)	TBD	NA	$13.75	NA	NA	NA	NA	TBD	NA	$15.54
RC - Zone 2, per month (Note 2)	TBD	NA	$20.13	NA	NA	NA	NA	TBD	NA	$19.55
RC - Zone 3, per month (Note 2)	TBD	NA	$44.40	NA	NA	NA	NA	TBD	NA	$28.02
RC - Zone 4, per month (Note 2)	TBD	NA	NA	NA	NA	NA	NA	NA	NA	NA
NRC - 1st	UEAL2	NA	$140.00	NA	NA	NA	NA	$86.50	NA	$58.50
NRC - Add'l	UEAL2	NA	$42.00	NA	NA	NA	NA	$27.80	NA	$31.00
NRC - Incremental Charge - Order Coordination - Time Specific (per LSR)	OCOSL	NA	$55.00	NA	NA	NA	NA	$55.00	NA	$55.00
2-Wire Analog VG Loop-SL1										
RC - Statewide, per month	UEAL2	$19.04	$17.00	$16.51	NA	$19.35	$21.26	$15.88	$22.49	$18.00
RC - Zone 1, per month (Note 2)	TBD	$16.90	$13.75	$14.21	NA	$15.82	$15.58	TBD	$18.48	$15.54
RC - Zone 2, per month (Note 2)	TBD	$21.76	$20.13	$16.41	NA	$21.75	$20.65	TBD	$27.87	$19.55
RC - Zone 3, per month (Note 2)	TBD	$28.48	$44.40	$26.08	NA	$32.93	$34.77	TBD	$36.91	$28.02
RC - Zone 4, per month (Note 2)	TBD	NA	NA	NA	NA	NA	$45.88	NA	NA	NA
NRC - 1st	UEAL2	$59.03	$80.00	$42.54	NA	$40.69	$59.25	$57.99	$70.44	$78.93
NRC - Add'l	UEAL2	$43.14	$55.00	$31.33	NA	$29.96	$43.67	$42.37	$44.05	$50.98
NRC - Disconnect Charge - 1st	UEAL2	$15.21	NA	NA	NA	$16.48	$16.35	$12.94	NA	NA
NRC - Disconnect Charge - Add'l	UEAL2	$3.22	NA	NA	NA	$3.36	$4.06	$2.75	NA	NA
NRC - Incremental Charge - Manual Service Order - 1st	SOMAN	$27.37	NA	$18.94	NA	$18.14	$25.52	$26.94	$44.22	NA
NRC - Incremental Charge - Manual Service Order - Add'l	SOMAN	$12.97	NA	$8.42	NA	$8.06	$11.34	$12.76	$13.55	NA
NRC - Incremental Charge - Manual Service Order - Disconnect - 1st	SOMAN	$17.77	NA	NA	NA	$11.41	$16.06	NA	NA	NA
NRC - Manual Order Coordination - 1st	TBD	NA	NA	NA	NA	NA	NA	$61.38	NA	NA
NRC - Manual Order Coordination - addl	TBD	NA	NA	NA	NA	NA	NA	$61.38	NA	NA
NRC - Incremental Charge - Order Coordination - Time Specific (per LSR)	TBD	NA	NA	NA	NA	NA	NA	$45.34	NA	NA
NRC - Loop Make-Up	UEANM	TBD	TBD	TBD	TBD	TBD	TBD	TBD	TBD	TBD
2-Wire Analog VG Loop-SL2 w/loop or ground start signaling										
RC - Statewide, per month	UEAL2	$22.43	$17.00	$19.57	NA	$22.84	$25.05	$19.50	$26.25	$26.02
RC - Zone 1, per month (Note 2)	TBD	$19.90	$13.75	$16.84	NA	$18.67	$18.35	TBD	$21.57	$22.46
RC - Zone 2, per month (Note 2)	TBD	$25.63	$20.13	$19.45	NA	$25.67	$24.33	TBD	$32.53	$28.27
RC - Zone 3, per month (Note 2)	TBD	$33.55	$44.40	$30.92	NA	$38.86	$34.77	TBD	$43.08	$40.51
RC - Zone 4, per month (Note 2)	TBD	NA	NA	NA	NA	NA	NA	NA	NA	NA
NRC - 1st	UEAL2	$145.46	$140.00	$104.17	NA	$99.69	$144.01	$142.97	$178.12	$192.97
NRC - Add'l	UEAL2	$108.40	$42.00	$78.10	NA	$74.73	$107.70	$106.56	$128.80	$140.72
NRC - Disconnect Charge - 1st	UEAL2	$40.31	NA	NA	NA	$28.73	$40.98	$34.28	NA	NA
NRC - Disconnect Charge - Add'l	UEAL2	$26.01	NA	NA	NA	$18.87	$26.95	$22.12	NA	NA
NRC - Incremental Charge - Manual Service Order - 1st	SOMAN	$27.37	NA	$18.94	NA	$18.14	$25.52	$26.94	$44.42	NA
NRC - Incremental Charge - Manual Service Order - Add'l	SOMAN	$12.97	NA	$8.42	NA	$8.06	$11.34	$12.76	$13.55	NA
NRC - Incremental Charge - Manual Service Order - Disconnect - 1st	SOMAN	$17.77	NA	NA	NA	$11.41	$26.95	NA	NA	NA
NRC - Incremental Charge - Order Coordination - Time Specific (per LSR)	OCOSL	$45.99	$55.00	$34.22	NA	$32.77	$45.27	$45.34	$45.43	$55.00
2-Wire Analog VG Loop-SL2 w/ reverse battery signaling										
RC - Statewide, per month	UEAR2	$22.43	$17.00	$19.57	NA	$22.84	$25.05	$19.50	$26.25	$26.02
RC - Zone 1, per month (Note 2)	TBD	$19.90	$13.75	$16.84	NA	$18.67	$18.35	TBD	$21.57	$22.46
RC - Zone 2, per month (Note 2)	TBD	$25.63	$20.13	$19.45	NA	$25.67	$24.33	TBD	$32.53	$28.27
RC - Zone 3, per month (Note 2)	TBD	$33.55	$44.40	$30.92	NA	$38.86	$34.77	TBD	$43.08	$40.51
RC - Zone 4, per month (Note 2)	TBD	NA	NA	NA	NA	NA	$45.88	NA	NA	NA
NRC - 1st	UEAR2	$145.46	$140.00	$104.17	NA	$99.69	$144.01	$142.97	$178.12	$192.97
NRC - Add'l	UEAR2	$108.40	$42.00	$78.10	NA	$74.73	$107.70	$106.56	$128.80	$140.72
NRC - Disconnect Charge - 1st	UEAR2	$40.31	NA	NA	NA	$28.73	$40.98	$34.28	NA	NA
NRC - Disconnect Charge - Add'l	UEAR2	$26.01	NA	NA	NA	$18.87	$26.95	$22.12	NA	NA
NRC - Incremental Charge - Manual Service Order - 1st	SOMAN	$27.37	NA	$18.94	NA	$18.14	$25.52	$29.64	$44.42	NA
NRC - Incremental Charge - Manual Service Order - Add'l	SOMAN	$12.97	NA	$8.42	NA	$8.06	$11.34	$12.76	$13.55	NA

BELLSOUTH / ACCESS INTEGRATED RATES
NETWORK ELEMENTS
AND OTHER SERVICES

DESCRIPTION	USOC	AL	FL	GA	KY	LA	MS	NC	SC	TN
NRC - Incremental Charge - Manual Service Order - Disconnect - 1st	SOMAN	$17.77	NA	NA	NA	$11.41	$26.95	NA	NA	NA
NRC - Incremental Charge - Order Coordination - Time Specific (per LSR)	OCOCL	$45.99	$55.00	$34.22	NA	$32.77	$45.27	$45.34	$45.43	$55.00
2-Wire Analog VG Loop (Standard)										
RC - Statewide, per month	UEAL2	NA	NA	NA	$20.00	NA	NA	NA	NA	NA
RC - Zone 1, per month (Note 2)	TBD	NA	NA	NA	$14.79	NA	NA	NA	NA	NA
RC - Zone 2, per month (Note 2)	TBD	NA	NA	NA	$27.68	NA	NA	NA	NA	NA
RC - Zone 3, per month (Note 2)	TBD	NA	NA	NA	$47.78	NA	NA	NA	NA	NA
RC - Zone 4, per month (Note 2)	TBD	NA	NA	NA	NA	NA	NA	NA	NA	NA
NRC - 1st	UEAL2	NA	NA	NA	$86.08	NA	NA	NA	NA	NA
NRC - Add'l	UEAL2	NA	NA	NA	$58.57	NA	NA	NA	NA	NA
NRC - Loop Make-up	UEANM	NA	NA	NA	TBD	NA	NA	NA	NA	NA
NRC - Manual Order Coordination	UEAMC	NA	NA	NA	TBD	NA	NA	NA	NA	NA
NRC - Incremental Charge - Order Coordination - Time Specific (per LSR)	OCOSL	NA	NA	NA	$55.00	NA	NA	NA	NA	NA
2-Wire Analog VG Loop (Customized), w/ loop or ground start signaling										
RC - Statewide, per month	UEAL2	NA	NA	NA	$23.35	NA	NA	NA	NA	NA
RC - Zone 1, per month (Note 2)	TBD	NA	NA	NA	$17.27	NA	NA	NA	NA	NA
RC - Zone 2, per month (Note 2)	TBD	NA	NA	NA	$32.32	NA	NA	NA	NA	NA
RC - Zone 3, per month (Note 2)	TBD	NA	NA	NA	$55.78	NA	NA	NA	NA	NA
RC - Zone 4, per month (Note 2)	TBD	NA	NA	NA	NA	NA	NA	NA	NA	NA
NRC - 1st	UEAL2	NA	NA	NA	$236.75	NA	NA	NA	NA	NA
NRC - Add'l	UEAL2	NA	NA	NA	$177.10	NA	NA	NA	NA	NA
NRC - Incremental Charge - Order Coordination - Time Specific (per LSR)	OCOSL	NA	NA	NA	$55.00	NA	NA	NA	NA	NA
2-Wire Analog VG Loop (Customized), w/ reverse battery signaling										
RC - Statewide, per month	UEAR2	NA	NA	NA	$23.35	NA	NA	NA	NA	NA
RC - Zone 1, per month (Note 2)	TBD	NA	NA	NA	$17.27	NA	NA	NA	NA	NA
RC - Zone 2, per month (Note 2)	TBD	NA	NA	NA	$32.32	NA	NA	NA	NA	NA
RC - Zone 3, per month (Note 2)	TBD	NA	NA	NA	$55.78	NA	NA	NA	NA	NA
RC - Zone 4, per month (Note 2)	TBD	NA	NA	NA	NA	NA	NA	NA	NA	NA
NRC - 1st	UEAR2	NA	NA	NA	$236.75	NA	NA	NA	NA	NA
NRC - Add'l	UEAR2	NA	NA	NA	$177.10	NA	NA	NA	NA	NA
NRC - Incremental Charge - Order Coordination - Time Specific (per LSR)	OCOSL	NA	NA	NA	$55.00	NA	NA	NA	NA	NA
4-Wire Analog VG Loop										
RC - Statewide, per month	UEAL4	$30.00	$30.00	$25.86	NA	$31.52	$30.55	$27.49	$35.86	$18.00
RC - Zone 1, per month (Note 2)	TBD	$26.62	$24.26	$22.26	NA	$25.76	$22.38	TBD	$29.47	$15.54
RC - Zone 2, per month (Note 2)	TBD	$34.28	$35.51	$25.70	NA	$35.42	$29.67	TBD	$44.44	$19.55
RC - Zone 3, per month (Note 2)	TBD	$44.87	$78.35	$40.85	NA	$53.63	$42.40	TBD	$58.85	$28.02
RC - Zone 4, per month (Note 2)	TBD	NA	NA	NA	NA	NA	$55.96	NA	NA	NA
NRC - 1st	UEAL4	$293.70	$141.00	$206.95	NA	$198.10	$289.06	$288.47	$383.39	$58.50
NRC - Add'l	UEAL4	$241.76	$43.00	$170.57	NA	$163.26	$238.19	$237.45	$286.77	$31.00
NRC - Disconnect Charge - 1st	UEAL4	$108.96	NA	NA	NA	$74.27	$108.14	$90.44	NA	NA
NRC - Disconnect Charge - Add'l	UEAL4	$57.01	NA	NA	NA	$39.44	$57.28	$47.33	NA	NA
NRC - Incremental Charge - Manual Service Order - 1st	SOMAN	$27.37	NA	$18.94	NA	$18.14	$25.52	$26.94	$44.06	NA
NRC - Incremental Charge - Manual Service Order - Add'l	SOMAN	$12.97	NA	$8.42	NA	$8.06	$11.34	$12.76	$13.55	NA
NRC - Incremental Charge - Manual Service Order - Disconnect - 1st	SOMAN	$17.77	NA	NA	NA	$11.41	$16.06	NA	NA	NA
NRC - Incremental Charge - Order Coordination - Time Specific (per LSR)	OCOSL	$45.99	$55.00	$34.22	NA	$32.77	$45.27	$45.34	$45.43	$55.00
4-Wire Analog VG Loop (Standard)										
RC - Statewide, per month	UEAL4	NA	NA	NA	$28.28	NA	NA	NA	NA	NA
RC - Zone 1, per month (Note 2)	TBD	NA	NA	NA	$20.92	NA	NA	NA	NA	NA
RC - Zone 2, per month (Note 2)	TBD	NA	NA	NA	$39.14	NA	NA	NA	NA	NA
RC - Zone 3, per month (Note 2)	TBD	NA	NA	NA	$67.56	NA	NA	NA	NA	NA
RC - Zone 4, per month (Note 2)	TBD	NA	NA	NA	NA	NA	NA	NA	NA	NA
NRC - 1st	UEAL4	NA	NA	NA	$457.14	NA	NA	NA	NA	NA

BELLSOUTH / ACCESS INTEGRATED RATES
NETWORK ELEMENTS
AND OTHER SERVICES

DESCRIPTION	USOC	AL	FL	GA	KY	LA	MS	NC	SC	TN
NRC - Add'l	UEAL4	NA	NA	NA	$348.83	NA	NA	NA	NA	NA
NRC - Incremental Charge - Order Coordination - Time Specific (per LSR)	OCOSL	NA	NA	NA	$55.00	NA	NA	NA	NA	NA
2-Wire ISDN Digital Grade Loop										
RC - Statewide, per month	U1L2X	$29.03	$40.00	$25.43	NA	$27.36	$29.83	$24.98	$32.47	$18.00
RC - Zone 1, per month (Note 2)	TBD	$25.76	$32.34	$21.89	NA	$22.36	$21.86	TBD	$26.68	$15.54
RC - Zone 2, per month (Note 2)	TBD	$33.17	$47.35	$25.27	NA	$30.75	$28.97	TBD	$40.24	$19.55
RC - Zone 3, per month (Note 2)	TBD	$43.42	$104.47	$40.17	NA	$40.56	$41.40	TBD	$53.29	$28.02
RC - Zone 4, per month (Note 2)	TBD	NA	NA	NA	NA	NA	$54.64	NA	NA	NA
NRC - 1st	U1L2X	$331.85	$306.00	$233.38	NA	$223.27	$326.38	$325.91	$423.04	$58.50
NRC - Add'l	U1L2X	$255.87	$283.00	$180.35	NA	$172.63	$252.00	$251.31	$301.75	$31.00
NRC - Disconnect Charge - 1st	U1L2X	$108.95	NA	NA	NA	$74.27	$108.14	$92.53	NA	NA
NRC - Disconnect Charge - Add'l	U1L2X	$57.01	NA	NA	NA	$39.44	$57.27	$48.42	NA	NA
NRC - Incremental Charge - Manual Service Order - 1st	SOMAN	$27.37	NA	$18.94	NA	$18.14	$25.52	$26.94	$44.42	NA
NRC - Incremental Charge - Manual Service Order - Add'l	SOMAN	$12.97	NA	$8.42	NA	$8.06	$11.34	$12.76	$13.55	NA
NRC - Incremental Charge - Manual Service Order - Disconnect - 1st	SOMAN	$17.77	NA	NA	NA	$11.41	$16.06	NA	NA	NA
NRC - Incremental Charge - Order Coordination - Time Specific (per LSR)	OCOSL	$45.99	$55.00	$34.22	$55.00	$32.77	$45.27	$45.34	$45.43	$55.00
2-Wire ISDN Digital Grade Loop (Standard)										
RC - Statewide, per month	U1L2X	NA	NA	NA	$31.99	NA	NA	NA	NA	NA
RC - Zone 1, per month (Note 2)	TBD	NA	NA	NA	$23.66	NA	NA	NA	NA	NA
RC - Zone 2, per month (Note 2)	TBD	NA	NA	NA	$44.28	NA	NA	NA	NA	NA
RC - Zone 3, per month (Note 2)	TBD	NA	NA	NA	$76.42	NA	NA	NA	NA	NA
RC - Zone 4, per month (Note 2)	TBD	NA	NA	NA	NA	NA	NA	NA	NA	NA
NRC - 1st	U1L2X	NA	NA	NA	$541.28	NA	NA	NA	NA	NA
NRC - Add'l	U1L2X	NA	NA	NA	$431.61	NA	NA	NA	NA	NA
NRC - Incremental Charge - Order Coordination - Time Specific (per LSR)	OCOSL	NA	NA	NA	$55.00	NA	NA	NA	NA	NA
2-Wire Asymmetrical Dig Subscriber Line (ADSL) Compatible Loop										
RC - Statewide, per month	UAL2X	$15.11	$15.81	$13.05	NA	$15.39	$14.83	$14.60	$20.81	$18.46
RC - Zone 1, per month (Note 2)	TBD	$13.41	$12.78	$11.23	NA	$12.58	$10.87	TBD	$17.10	$15.93
RC - Zone 2, per month (Note 2)	TBD	$17.26	$18.72	$12.97	NA	$17.30	$14.40	TBD	$25.79	$20.05
RC - Zone 3, per month (Note 2)	TBD	$22.60	$41.29	$20.62	NA	$26.19	$20.58	TBD	$34.15	$28.74
RC - Zone 4, per month (Note 2)	TBD	NA	NA	NA	NA	NA	$27.16	NA	NA	NA
NRC - 1st	UAL2X	$514.21	$113.85	$359.73	NA	$343.13	$504.82	$504.90	$600.61	$640.79
NRC - Add'l	UAL2X	$464.58	$99.61	$325.15	NA	$310.03	$456.24	$456.17	$507.33	$541.94
NRC - Disconnect Charge - 1st	UAL2X	$106.65	NA	NA	NA	$72.54	$105.86	$90.55	NA	NA
NRC - Disconnect Charge - Add'l	SOMAN	$56.98	NA	NA	NA	$39.42	$57.25	$48.40	NA	NA
NRC - Incremental Charge - Manual Service Order - 1st	SOMAN	$27.37	NA	$18.94	NA	$18.14	$25.52	$26.94	$44.42	NA
NRC - Incremental Charge - Manual Service Order - Add'l	SOMAN	$12.97	NA	$8.42	NA	$8.06	$11.34	$12.76	$13.55	NA
NRC - Incremental Charge - Manual Service Order - Disconnect - 1st	SOMAN	$17.77	NA	NA	NA	$11.41	$16.06	NA	NA	NA
NRC - Incremental Charge - Order Coordination - Time Specific (per LSR)	OCOSL	$45.99	$55.00	$34.22	NA	$32.77	$45.27	$45.34	$45.43	$55.00
2-Wire ADSL Loop (Standard)										
RC - Statewide, per month	UAL2X	NA	NA	NA	$11.89	NA	NA	NA	NA	NA
RC - Zone 1, per month (Note 2)	TBD	NA	NA	NA	$8.79	NA	NA	NA	NA	NA
RC - Zone 2, per month (Note 2)	TBD	NA	NA	NA	$16.46	NA	NA	NA	NA	NA
RC - Zone 3, per month (Note 2)	TBD	NA	NA	NA	$28.40	NA	NA	NA	NA	NA
RC - Zone 4, per month (Note 2)	TBD	NA	NA	NA	NA	NA	NA	NA	NA	NA
NRC - 1st	UAL2X	NA	NA	NA	$713.50	NA	NA	NA	NA	NA
NRC - Add'l	UAL2X	NA	NA	NA	$609.44	NA	NA	NA	NA	NA
NRC - Incremental Charge - Order Coordination - Time Specific (per LSR)	OCOSL	NA	NA	NA	$55.00	NA	NA	NA	NA	NA
2-Wire High Bit Rate Dig Subscriber Line (HDSL) Compatible Loop										
RC - Statewide, per month	UHL2X	$11.76	$12.12	$9.15	NA	$11.61	$11.60	$11.98	$14.86	$13.46
RC - Zone 1, per month (Note 2)	TBD	$10.44	$9.80	$7.88	NA	$9.49	$8.50	TBD	$12.21	$11.62
RC - Zone 2, per month (Note 2)	TBD	$13.44	$14.35	$9.09	NA	$13.05	$11.26	TBD	$18.41	$14.62

BELLSOUTH / ACCESS INTEGRATED RATES
NETWORK ELEMENTS
AND OTHER SERVICES

DESCRIPTION	USOC	AL	FL	GA	KY	LA	MS	NC	SC	TN
RC - Zone 3, per month (Note 2)	TBD	$17.59	$31.65	$14.46	NA	$19.76	$16.10	TBD	$24.39	$20.96
RC - Zone 4, per month (Note 2)	TBD	NA	NA	NA	NA	NA	$21.25	NA	NA	NA
NRC - 1st	UHL2X	$514.21	$113.85	$359.73	NA	$343.13	$504.82	$504.90	$600.61	$640.79
NRC - Add'l	UHL2X	$464.58	$99.61	$325.15	NA	$310.03	$456.24	$456.17	$507.33	$541.94
NRC - Disconnect Charge - 1st	UHL2X	$106.65	NA	NA	NA	$72.54	$105.86	$90.55	NA	NA
NRC - Disconnect Charge - Add'l	UHL2X	$56.98	NA	NA	NA	$39.42	$57.25	$48.40	NA	NA
NRC - Incremental Charge - Manual Service Order - 1st	SOMAN	$27.37	NA	$18.94	NA	$18.14	$25.52	$26.94	$44.42	NA
NRC - Incremental Charge - Manual Service Order - Add'l	SOMAN	$12.97	NA	$8.42	NA	$8.06	$11.34	$12.76	$13.55	NA
NRC - Incremental Charge - Manual Service Order - Disconnect - 1st	SOMAN	$17.77	NA	NA	NA	$11.41	$16.06	NA	NA	NA
NRC - Incremental Charge - Order Coordination - Time Specific (per LSR)	OCOSL	$45.99	$55.00	$34.22	NA	$32.77	$45.27	$45.34	$45.43	$55.00
2-Wire HDSL Loop (Standard)										
RC - Statewide, per month	UHL2X	NA	NA	NA	$8.51	NA	NA	NA	NA	NA
RC - Zone 1, per month (Note 2)	TBD	NA	NA	NA	$6.29	NA	NA	NA	NA	NA
RC - Zone 2, per month (Note 2)	TBD	NA	NA	NA	$11.78	NA	NA	NA	NA	NA
RC - Zone 3, per month (Note 2)	TBD	NA	NA	NA	$20.33	NA	NA	NA	NA	NA
RC - Zone 4, per month (Note 2)	TBD	NA	NA	NA	NA	NA	NA	NA	NA	NA
NRC - 1st	UHL2X	NA	NA	NA	$713.50	NA	NA	NA	NA	NA
NRC - Add'l	UHL2X	NA	NA	NA	$609.44	NA	NA	NA	NA	NA
NRC - Incremental Charge - Order Coordination - Time Specific (per LSR)	OCOSL	NA	NA	NA	$55.00	NA	NA	NA	NA	NA
4-Wire High Bit Rate Dig Subscriber Line (HDSL) Compatible Loop										
RC - Statewide, per month	UHL4X	$14.39	$18.24	$12.07	NA	$16.39	$14.14	$13.97	$19.73	$17.91
RC - Zone 1, per month (Note 2)	TBD	$12.77	$14.75	$10.39	NA	$13.40	$10.36	TBD	$16.21	$15.46
RC - Zone 2, per month (Note 2)	TBD	$16.44	$21.59	$12.00	NA	$18.42	$13.73	TBD	$24.45	$19.46
RC - Zone 3, per month (Note 2)	TBD	$21.52	$47.64	$19.07	NA	$27.89	$19.62	TBD	$32.38	$27.88
RC - Zone 4, per month (Note 2)	TBD	NA	NA	NA	NA	NA	$25.90	NA	NA	NA
NRC - 1st	UHL4X	$541.13	$116.91	$378.86	NA	$361.45	$531.21	$531.35	$625.11	$666.70
NRC - Add'l	UHL4X	$491.50	$101.71	$344.28	NA	$328.35	$482.63	$482.62	$532.78	$568.86
NRC - Disconnect Charge - 1st	UHL4X	$106.65	NA	NA	NA	$72.54	$105.86	$88.51	NA	NA
NRC - Disconnect Charge - Add'l	UHL4X	$56.98	NA	NA	NA	$39.42	$57.25	$47.31	NA	NA
NRC - Incremental Charge - Manual Service Order - 1st	SOMAN	$27.37	NA	$18.94	NA	$18.14	$25.52	$26.94	$44.06	NA
NRC - Incremental Charge - Manual Service Order - Add'l	SOMAN	$12.97	NA	$8.42	NA	$8.06	$11.34	$12.76	$13.55	NA
NRC - Incremental Charge - Manual Service Order - Disconnect -1st	SOMAN	$17.77	NA	NA	NA	$11.41	$16.06	NA	NA	NA
NRC - Incremental Charge - Order Coordination - Time Specific (per LSR)	OCOSL	$45.99	$55.00	$34.22	NA	$32.77	$45.27	$45.34	$45.43	$55.00
4-Wire HDSL Loop (Standard)										
RC - Statewide, per month	UHL4X	NA	NA	NA	$10.39	NA	NA	NA	NA	NA
RC - Zone 1, per month (Note 2)	TBD	NA	NA	NA	$7.68	NA	NA	NA	NA	NA
RC - Zone 2, per month (Note 2)	TBD	NA	NA	NA	$14.38	NA	NA	NA	NA	NA
RC - Zone 3, per month (Note 2)	TBD	NA	NA	NA	$24.82	NA	NA	NA	NA	NA
RC - Zone 4, per month (Note 2)	TBD	NA	NA	NA	NA	NA	NA	NA	NA	NA
NRC - 1st	UHL4X	NA	NA	NA	$748.93	NA	NA	NA	NA	NA
NRC - Add'l	UHL4X	NA	NA	NA	$646.17	NA	NA	NA	NA	NA
NRC - Incremental Charge - Order Coordination - Time Specific (per LSR)	OCOSL	NA	NA	NA	$55.00	NA	NA	NA	NA	NA
4-Wire DS1 Digital Loop										
RC - Statewide, per month	USLXX	$64.65	$80.00	$64.52	$67.96	$72.86	$69.59	$62.78	$72.55	TBD
RC - Zone 1, per month (Note 2)	TBD	$57.37	$64.69	$55.53	$50.26	$59.56	$50.99	TBD	$59.61	TBD
RC - Zone 2, per month (Note 2)	TBD	$73.87	$94.71	$64.13	$94.06	$81.88	$67.58	TBD	$89.90	TBD
RC - Zone 3, per month (Note 2)	TBD	$96.69	$208.93	$101.93	$162.34	$123.98	$96.58	TBD	$119.06	TBD
RC - Zone 4, per month (Note 2)	TBD	NA	NA	NA	NA	NA	$127.47	NA	NA	NA
NRC - 1st	USLXX	$610.13	$540.00	$429.98	$849.80	$410.38	$599.09	$714.84	$715.77	TBD
NRC - Add'l	USLXX	$380.26	$465.00	$268.18	$523.27	$255.48	$373.90	$421.47	$421.50	TBD
NRC - Disconnect Charge - 1st	USLXX	$134.77	NA	NA	NA	$92.35	$133.53	NA	NA	NA
NRC - Disconnect Charge - Add'l	USLXX	$55.97	NA	NA	NA	$38.44	$56.25	NA	NA	NA

BELLSOUTH / ACCESS INTEGRATED RATES
NETWORK ELEMENTS
AND OTHER SERVICES

DESCRIPTION	USOC	AL	FL	GA	KY	LA	MS	NC	SC	TN
NRC - Incremental Charge - Manual Service Order - 1st	SOMAN	$27.37	NA	$18.94	NA	$18.14	$25.52	$42.19	$43.77	NA
NRC - Incremental Charge - Manual Service Order - Add'l	SOMAN	$12.97	NA	$8.42	NA	$8.06	$11.34	$12.76	$13.55	NA
NRC - Incremental Charge - Manual Service Order - Disconnect	SOMAN	$17.77	NA	NA	NA	$11.41	$16.06	NA	NA	NA
NRC - Incremental Charge - Order Coordination - Time Specific (per LSR)	OCOSL	$49.18	$55.00	$34.52	$55.00	$33.05	$48.17	$48.31	$48.47	NA
4-Wire 56 Kbps Dig Grade Loop										
RC - Statewide, per month	UDL56	$34.15	$48.33	$29.92	NA	$35.58	$34.95	$32.67	$41.70	$42.23
RC - Zone 1, per month (Note 2)	TBD	$30.30	$39.08	$25.75	NA	$29.08	$25.61	TBD	$34.26	$36.45
RC - Zone 2, per month (Note 2)	TBD	$39.02	$57.21	$29.74	NA	$39.98	$33.94	TBD	$51.67	$45.87
RC - Zone 3, per month (Note 2)	TBD	$51.07	$126.22	$47.27	NA	$60.54	$48.51	TBD	$68.43	$65.75
RC - Zone 4, per month (Note 2)	TBD	NA	NA	NA	NA	NA	$64.02	NA	NA	NA
NRC - 1st	UDL56	$498.05	$654.72	$348.55	NA	$333.28	$489.00	$489.04	$602.73	$643.00
NRC - Add'l	UDL56	$343.70	$428.45	$241.20	NA	$230.50	$337.93	$337.51	$393.50	$421.26
NRC - Disconnect Charge - 1st	UDL56	$129.62	NA	NA	NA	$87.99	$128.36	$107.58	$44.06	NA
NRC - Disconnect Charge - Add'l	UDL56	$64.25	NA	NA	NA	$44.24	$64.35	$53.33	$13.55	NA
NRC - Incremental Charge - Manual Service Order - 1st	SOMAN	$27.37	NA	$18.94	NA	$18.14	$25.52	$26.94	NA	NA
NRC - Incremental Charge - Manual Service Order - Add'l	SOMAN	$12.97	NA	$8.42	NA	$8.06	$11.34	$12.76	NA	NA
NRC - Incremental Charge - Manual Service Order - Disconnect - 1st	SOMAN	$17.77	NA	NA	NA	$11.41	$16.06	NA	NA	NA
NRC - Incremental Charge - Order Coordination - Time Specific (per LSR)	OCOSL	$45.99	$55.00	$34.22	NA	$32.77	$45.27	$45.34	$45.43	$55.00
4-Wire 64 Kbps Dig Grade Loop										
RC - Statewide, per month	UDL64	$34.15	$48.33	$29.22	NA	$35.58	$34.95	$32.67	$41.70	$42.23
RC - Zone 1, per month (Note 2)	TBD	$30.30	$39.08	$25.75	NA	$29.08	$25.61	TBD	$34.26	$36.45
RC - Zone 2, per month (Note 2)	TBD	$39.02	$57.21	$29.74	NA	$39.98	$33.94	TBD	$51.67	$45.87
RC - Zone 3, per month (Note 2)	TBD	$51.07	$126.22	$47.27	NA	$60.54	$48.51	TBD	$68.43	$65.75
RC - Zone 4, per month (Note 2)	TBD	NA	NA	NA	NA	NA	$64.02	NA	NA	NA
NRC - 1st	UDL64	$498.05	$654.72	$348.55	NA	$333.28	$489.00	$489.04	$602.73	$643.00
NRC - Add'l	UDL64	$343.70	$428.45	$241.20	NA	$230.50	$337.93	$337.51	$393.50	$421.26
NRC - Disconnect Charge - 1st	UDL64	$129.62	NA	NA	NA	$87.99	$128.36	$107.58	$44.06	NA
NRC - Disconnect Charge - Add'l	UDL64	$64.25	NA	NA	NA	$44.24	$64.35	$53.33	$13.55	NA
NRC - Incremental Charge - Manual Service Order - 1st	SOMAN	$27.37	NA	$18.94	NA	$18.14	$25.52	$26.94	NA	NA
NRC - Incremental Charge - Manual Service Order - Add'l	SOMAN	$12.97	NA	$8.42	NA	$8.06	$11.34	$12.76	NA	NA
NRC - Incremental Charge - Manual Service Order - Disconnect - 1st	SOMAN	$17.77	NA	NA	NA	$11.41	$16.06	NA	NA	NA
NRC - Incremental Charge - Order Coordination - Time Specific (per LSR)	OCOSL	$45.99	$55.00	$34.22	NA	$32.77	$45.27	$45.34	$45.43	$55.00
2-Wire Unbundled Copper Loop (18kft or less) Note 3										
RC - Statewide, per month	UCLPB	$15.11	$18.00	$13.97	$11.89	$21.00	$14.83	$19.00	$20.81	$12.16
RC - Zone 1, per month (Note 2)	TBD	TBD	$18.60	$19.80	TBN	$18.80	$16.85	TBD	$18.90	$19.85
RC - Zone 2, per month (Note 2)	TBD	TBD	$27.23	$22.86	TBN	$25.85	$22.34	TBD	$28.50	$24.98
RC - Zone 3, per month (Note 2)	TBD	TBD	$60.07	$36.34	TBN	$39.14	$31.92	TBD	$37.75	$35.81
RC - Zone 4, per month (Note 2)	TBD	NA	NA	NA	NA	NA	$42.13	NA	NA	NA
NRC - 1st	UCLPB	$514.21	$340.00	$395.16	$713.50	$340.00	$504.82	$504.90	$600.61	$270.01
NRC - Add'l	UCLPB	$464.58	$300.00	$217.39	$609.44	$300.00	$456.24	$456.17	$507.33	$234.63
NRC - Disconnect Charge - 1st	UCLPB	NA	NA	NA	NA	$72.54	$105.86	$90.55	NA	$74.54
NRC - Disconnect Charge - Add'l	UCLPB	NA	NA	NA	NA	$39.42	$57.25	$48.40	NA	$39.14
NRC - Incremental Charge - Manual Service Order - 1st	SOMAN	$47.00	$47.00	$18.94	$47.00	$18.14	$25.52	$26.94	$25.52	NA
NRC - Incremental Charge - Manual Service Order - Add'l	SOMAN	$21.00	$21.00	$8.42	$21.00	$8.06	$11.34	$12.76	$47.00	NA
NRC - Incremental Charge - Manual Service Order - Disconnect - 1st	SOMAN	NA	NA	$142.27	NA	NA	NA	NA	NA	NA
NRC - Incremental Charge - Manual Service Order - Disconnect	SOMAN	$17.77	NA	$37.86	$17.77	$11.41	$16.06	NA	$21.00	NA
NRC - Incremental Charge - Manual Order Coordination - per loop	UCLMC	$16.00	$16.00	$36.46	NA	$32.77	$45.27	$45.34	$45.43	$34.29
2-Wire Unbundled Copper Loop (>18kft) Note 3										
RC - Statewide, per month	UCL2L	$40.00	$35.00	$41.61	$40.00	$37.00	$45.00	$35.00	$40.00	$35.00
RC - Zone 1, per month (Note 2)	TBD	TBD	$18.60	$19.80	TBN	$18.80	$16.85	TBD	$18.90	$19.85
RC - Zone 2, per month (Note 2)	TBD	TBD	$27.23	$22.86	TBN	$25.85	$22.34	TBD	$28.50	$24.98
RC - Zone 3, per month (Note 2)	TBD	TBD	$60.07	$36.34	TBN	$39.14	$31.92	TBD	$37.75	$35.81

BELLSOUTH / ACCESS INTEGRATED RATES
NETWORK ELEMENTS
AND OTHER SERVICES

DESCRIPTION	USOC	AL	FL	GA	KY	LA	MS	NC	SC	TN
RC - Zone 4, per month (Note 2)	TBD	NA	NA	NA	NA	NA	$42.13	NA	NA	NA
NRC - 1st	UCL2L	$514.21	$340.00	$395.16	$713.50	$340.00	$504.82	$504.90	$600.61	$270.01
NRC - Add'l	UCL2L	$464.58	$300.00	$217.39	$609.44	$300.00	$456.24	$456.17	$507.33	$234.63
NRC - Disconnect Charge - 1st	UCL2L	NA	NA	NA	NA	$72.54	$105.86	$90.55	NA	$74.54
NRC - Disconnect Charge - Add'l	UCL2L	NA	NA	NA	NA	$39.42	$57.25	$48.40	NA	$39.14
NRC - Incremental Charge - Manual Service Order - 1st	SOMAN	$47.00	$47.00	$18.94	$47.00	$18.14	$25.52	$26.94	$25.52	NA
NRC - Incremental Charge - Manual Service Order - Add'l	SOMAN	$21.00	$21.00	$8.42	$21.00	$8.06	$11.34	$12.76	$47.00	NA
NRC - Incremental Charge - Manual Service Order - Disconnect - 1st	SOMAN	NA	NA	$142.27	NA	NA	NA	NA	NA	NA
NRC - Incremental Charge - Manual Service Order - Disconnect	SOMAN	$17.77	NA	$37.86	$17.77	$11.41	$16.06	NA	$21.00	NA
NRC - Incremental Charge - Manual Order Coordination - per loop	UCLMC	$16.00	$16.00	$36.46	NA	$32.77	$45.27	$45.34	$45.43	$34.29
DS3 Unbundled Local Loop										
DS3 Unbundled Local Loop - per mile	1L5ND	$43.96	$40.01	$29.96	$43.69	$38.98	$54.39	$32.53	$56.71	$30.53
DS3 Unbundled Local Loop- per Facility Termination	UE3PX	$456.18	$470.83	$392.61	$436.95	$497.08	$427.81	$387.01	$510.30	$400.21
NRC - Facility Termination - 1st	UE3PX	$973.58	$770.47	$770.96	$1,091.00	$709.14	$975.22	$964.04	$1,091.00	$726.16
NRC - Facility Termination - Add'l	UE3PX	$547.59	$436.40	$437.71	$661.23	$402.63	$549.17	$542.73	$654.13	$411.64
NRC - Facility Termination - Disconnect - 1st	UE3PX	$132.56	$108.95	$111.07	NA	$102.16	$134.07	$131.65	NA	$103.36
NRC - Facility Termination - Disconnect - Add'l	UE3PX	$129.07	$106.01	$108.14	NA	$99.46	$130.59	$128.19	NA	$100.59
NRC - Incremental Charge--Manual Svc Order - 1st	SOMAC	$70.10	NA	$54.64	$93.12	$50.25	$68.62	$69.34	$92.52	$53.03
NRC - Incremental Charge--Manual Svc Order - Add'l	SOMAC	$70.10	NA	$54.64	$93.12	$50.25	$68.62	$69.34	$92.52	$53.03
NRC - Incremental Cost - Manual Svc. Order vs. Elect-Disconnect-1st	SOMAC	$30.09	NA	$22.77	NA	$20.94	$28.59	$29.76	NA	$22.95
NRC - Incremental Cost - Manual Svc. Order vs. Elect-Disconnect-Add'l	SOMAC	$30.09	NA	$22.77	NA	$20.94	$28.59	$29.76	NA	$22.95
STS-1 Unbundled Local Loop										
STS-1 Unbundled Local Loop - per mile	1L5ND	$43.96	$40.01	$29.96	$43.69	$38.98	$54.39	$32.53	$56.71	$30.53
STS-1 Unbundled Local Loop- per Facility Termination	UDLS1	$456.18	$470.83	$392.61	$436.95	$497.08	$427.81	$387.01	$510.30	$400.21
NRC - STS-1 - Facility Termination - 1st	UDLS1	$973.58	$770.47	$770.96	$1,091	$709.14	$975.22	$964.04	$1,091	$726.16
NRC - STS-1 - Facility Termination - Add'l	UDLS1	$547.59	$436.40	$437.71	$661.23	$402.63	$549.17	$542.73	$654.13	$411.64
NRC - STS-1 - Facility Termination - Disconnect - 1st	UDLS1	$132.56	$108.95	$111.07	NA	$102.16	$134.07	$131.65	NA	$103.36
NRC - STS-1 - Facility Termination - Disconnect - Add'l	UDLS1	$129.07	$106.01	$108.14	NA	$99.46	$130.59	$128.19	NA	$100.59
NRC - STS-1 - Incremental Charge--Manual Svc Order - 1st	SOMAC	$70.10	NA	$54.64	$93.12	$50.25	$68.62	$69.34	$92.52	$53.03
NRC - STS-1 - Incremental Charge--Manual Svc Order - Add'l	SOMAC	$70.10	NA	$54.64	$93.12	$50.25	$68.62	$69.34	$92.52	$53.03
NRC - STS-1 - Incremental Cost - Manual Svc. Order vs. Elect-Disconnect-1st	SOMAC	$30.09	NA	$22.77	NA	$20.94	$28.59	$29.76	NA	$22.95
NRC - STS-1 - Incremental Cost - Manual Svc. Order vs. Elect-Disconnect-Add'l	SOMAC	$30.09	NA	$22.77	NA	$20.94	$28.59	$29.76	NA	$22.95
Unbundled Loop Modification - Note 3										
Load Coil/Equipment Removal per pair - Loops up to 18kft	ULM2L	$80.55	$80.55	$80.55	$80.55	$80.55	$80.55	$80.55	$80.55	$80.55
Load Coil/Equipment Removal per pair - Loops > 18kft - 1st	ULM2G	$880.08	$880.08	$880.08	$880.08	$880.08	$880.08	$880.08	$880.08	$880.08
Load Coil/Equipment Removal per pair - Loops > 18kft - Add'l	ULM2G	$27.30	$27.30	$27.30	$27.30	$27.30	$27.30	$27.30	$27.30	$27.30
Bridged Tap Removal per pair unloaded	ULMBT	$121.14	$121.14	$121.14	$121.14	$121.14	$121.14	$121.14	$121.14	$121.14
Loop Make-Up Service Inquiry - Note 3										
Per Service Inquiry	UMKLP	$233.75	$233.75	$233.75	$233.75	$233.75	$233.75	$233.75	$233.75	$233.75
Unbundled Sub-Loops										
Sub-Loop Analog										
Loop Distribution per 2-Wire Analog VG Loop (Including NID), per month	USBN2	NA	$8.57	$9.12	$10.83	BFR	NA	NA	NA	$9.79
NRC - Set-Up per Cross Box location - CLEC Feeder Facility set-up	USBSA	TBN	TBD	TBD	TBD	TBN	TBN	TBN	TBN	TBD
NRC - Set-Up per Cross Box location - per 25 pair panel set-up	USBSB	TBN	TBD	TBD	TBD	TBN	TBN	TBN	TBN	TBD
NRC - 1st	USBN2	TBN	$78.28	$207.01	$459.85	TBN	TBN	TBN	TBN	$586.00
NRC - Add'l	USBN2	TBN	$58.33	$171.32	$352.89	TBN	TBN	TBN	TBN	$255.00
NRC - Disconnect Charge - 1st	USBN2	TBN	NA	NA	NA	TBN	TBN	TBN	TBN	NA
NRC - Disconnect Charge - Add'l	USBN2	TBN	NA	NA	NA	TBN	TBN	TBN	TBN	NA
NRC - Incremental Charge - Manual Service Order - 1st	SOMAN	TBN	NA	$18.94	NA	TBN	TBN	TBN	TBN	NA
NRC - Incremental Charge - Manual Service Order - Add'l	SOMAN	TBN	NA	$8.42	NA	TBN	TBN	TBN	TBN	NA
NRC - Incremental Charge - Manual Service Order - Disconnect	SOMAN	TBN	NA	NA	NA	TBN	TBN	TBN	TBN	NA
NRC - Incremental Charge - Manual Order Coordination - per loop	USBMC	TBN	TBD	TBD	TBD	TBN	TBN	TBN	TBN	TBD

BELLSOUTH / ACCESS INTEGRATED RATES
NETWORK ELEMENTS
AND OTHER SERVICES

DESCRIPTION	USOC	AL	FL	GA	KY	LA	MS	NC	SC	TN
Loop Distribution per 2-Wire Analog VG Loop (Excluding NID), per month	TBD	NA	NA	NA	$9.95	NA	NA	NA	NA	$9.23
NRC - Set-Up per Cross Box location - CLEC Feeder Facility set-up	USBSA	NA	NA	NA	$9.95	NA	NA	NA	NA	TBD
NRC - Set-Up per Cross Box location - per 25 pair panel set-up	USBSB	NA	NA	NA	$9.95	NA	NA	NA	NA	TBD
NRC - 1st	TBD	NA	NA	NA	$459.85	NA	NA	NA	NA	$587.00
NRC - Add'l	TBD	NA	NA	NA	$352.89	NA	NA	NA	NA	$255.00
NRC - Incremental Charge - Manual Order Coordination - per loop	USBMC	TBN	TBD	TBN	TBN	TBN	TBN	TBN	TBN	TBD
Loop Distribution per 4-Wire Analog VG Loop (Incl NID), per month	USBN4	TBN	$11.29	TBN	TBN	TBN	TBN	TBN	TBN	TBD
NRC - Set-Up per Cross Box location - CLEC Feeder Facility set-up	USBSA	TBN	TBD	TBN	TBN	TBN	TBN	TBN	TBN	TBD
NRC - Set-Up per Cross Box location - per 25 pair panel set-up	USBSB	TBN	TBD	TBN	TBN	TBN	TBN	TBN	TBN	TBD
NRC - 1st	USBN4	TBN	$112.07	TBN	TBN	TBN	TBN	TBN	TBN	TBD
NRC - Add'l	USBN4	TBN	$92.11	TBN	TBN	TBN	TBN	TBN	TBN	TBD
NRC - Incremental Charge - Manual Order Coordination - per loop	USBMC	TBN	TBD	TBN	TBN	TBN	TBN	TBN	TBN	TBD
Sub-Loop-Intrabuilding Network Cable (INC) (riser cable), 2W analog, per month	USBR2									
NRC - Set-Up per Building Equipment Room - CLEC Feeder Facility set-up	USBSC	TBN	TBN	TBN	TBN	TBN	TBN	TBN	TBN	TBN
NRC - Set-Up per Building Equipment Room - per 25 pair panel set-up	USBSD	TBN	TBN	TBN	TBN	TBN	TBN	TBN	TBN	TBN
NRC - 1st	USBR2	TBN	TBN	TBN	TBN	TBN	TBN	TBN	TBN	TBN
NRC - Add'l	USBR2	TBN	TBN	TBN	TBN	TBN	TBN	TBN	TBN	TBN
NRC - Disconnect Charge - 1st	USBR2	TBN	TBN	TBN	TBN	TBN	TBN	TBN	TBN	TBN
NRC - Disconnect Charge - Add'l	USBR2	TBN	TBN	TBN	TBN	TBN	TBN	TBN	TBN	TBN
NRC - Incremental Charge - Manual Service Order - 1st	SOMAN	TBN	TBN	TBN	TBN	TBN	TBN	TBN	TBN	TBN
NRC - Incremental Charge - Manual Service Order - Add'l	SOMAN	TBN	TBN	TBN	TBN	TBN	TBN	TBN	TBN	TBN
NRC - Incremental Charge - Manual Service Order - Disconnect	SOMAN	TBN	TBN	TBN	TBN	TBN	TBN	TBN	TBN	TBN
NRC - Incremental Charge - Manual Order Coordination - per loop	USBMC	TBN	TBN	TBN	TBN	TBN	TBN	TBN	TBN	TBN
Sub-Loop-Intrabuilding Network Cable (INC) (riser cable), 4W analog, per month	USBR4	TBN	TBN	TBN	TBN	TBN	TBN	TBN	TBN	TBN
NRC - Set-Up per Building Equipment Room - CLEC Feeder Facility set-up	USBSC	TBN	TBN	TBN	TBN	TBN	TBN	TBN	TBN	TBN
NRC - Set-Up per Building Equipment Room - per 25 pair panel set-up	USBSD	TBN	TBN	TBN	TBN	TBN	TBN	TBN	TBN	TBN
NRC - 1st	USBR4	TBN	TBN	TBN	TBN	TBN	TBN	TBN	TBN	TBN
NRC - Add'l	USBR4	TBN	TBN	TBN	TBN	TBN	TBN	TBN	TBN	TBN
NRC - Disconnect Charge - 1st	USBR4	TBN	TBN	TBN	TBN	TBN	TBN	TBN	TBN	TBN
NRC - Disconnect Charge - Add'l	USBR4	TBN	TBN	TBN	TBN	TBN	TBN	TBN	TBN	TBN
NRC - Incremental Charge - Manual Service Order - 1st	SOMAN	TBN	TBN	TBN	TBN	TBN	TBN	TBN	TBN	TBN
NRC - Incremental Charge - Manual Service Order - Add'l	SOMAN	TBN	TBN	TBN	TBN	TBN	TBN	TBN	TBN	TBN
NRC - Incremental Charge - Manual Service Order - Disconnect	SOMAN	TBN	TBN	TBN	TBN	TBN	TBN	TBN	TBN	TBN
NRC - Incremental Charge - Manual Order Coordination - per loop	USBMC	TBN	TBN	TBN	TBN	TBN	TBN	TBN	TBN	TBN
Unbundled Network Terminating Wire										
UNTW Pair, per pair, per month	UENPP	TBN	$0.67	$1.56	$1.24	NA	NA	NA	NA	$1.31
Site Visit Survey, per MDU/MTU Complex, NRC	UENVS	TBN	$225.00	$225.00	$225.00	NA	NA	NA	NA	$225.00
Site Visit Set-Up – Terminal Preparation, per terminal										
NRC - 1st terminal	UENSS	TBN	$98.00	$98.00	$98.00	TBN	TBN	TBN	TBN	$98.00
NRC - Add'l terminal	UENSS	TBN	$65.00	$65.00	$65.00	TBN	TBN	TBN	TBN	$65.00
Access Terminal Provisioning & 1st 25 pair panel (SPOI), per terminal, NRC	UEN1T	TBN	$110.00	$110.00	$110.00	TBN	TBN	TBN	TBN	$110.00
Existing Access Terminal Provisioning, 2nd 25 pair panel, per terminal, NRC	UEN2T	TBN	$35.00	$35.00	$35.00	TBN	TBN	TBN	TBN	$35.00
UNTW Pair Provisioning, per pair, NRC	UENPP	TBN	$9.00	$9.00	$9.00	TBN	TBN	TBN	TBN	$9.00
Service Visit for Provisioning, per request, per premises, NRC	UENSV	TBN	$55.00	$55.00	$55.00	TBN	TBN	TBN	TBN	$55.00
Manual Service Order, NRC	MOCLA	TBN	$45.00	$45.00	$45.00	TBN	TBN	TBN	TBN	$45.00
Sub-Loop Concentration - Channelization Sys (Outside CO)										
NRC - Incremental Charge - Manual Service Order - 1st	SOMAN	$27.37	TBD	$18.94	TBD	BFR	BFR	BFR	BFR	TBD
NRC - Incremental Charge - Manual Service Order - Add'l	SOMAN	$12.97	TBD	$8.42	TBD	BFR	BFR	BFR	BFR	TBD
TR008 - System A (96 channel capacity - channels 1-96), per month	UCT8A	NA	$792.49	$724.79	$757.00	NA	NA	NA	NA	$683.78
NRC - 1st	UCT8A	NA	$640.93	$632.36	$633.94	NA	NA	NA	NA	$634.31
NRC - Add'l	UCT8A	NA	$315.03	$310.82	$311.60	NA	NA	NA	NA	$311.78
TR008 - System B (96 channel capacity - channels 97-192), per month			$155.32	$92.91	$95.60	NA	NA	NA	NA	$102.12
NRC - 1st	UCT8B	NA	$640.93	$632.36	$633.94	NA	NA	NA	NA	$634.31

BELLSOUTH / ACCESS INTEGRATED RATES
NETWORK ELEMENTS
AND OTHER SERVICES

DESCRIPTION	USOC	AL	FL	GA	KY	LA	MS	NC	SC	TN
NRC - Add'l	UCT8B	NA	$315.03	$310.82	$311.60	NA	NA	NA	NA	$311.78
TR303 - System A (96 channel capacity - channels 1-96), per month			$835.72	$764.42	$799.95	NA	NA	NA	NA	$726.87
NRC - 1st	UCT3A	NA	$640.93	$632.36	$633.94	NA	NA	NA	NA	$634.31
NRC - Add'l	UCT3A	NA	$315.03	$310.82	$311.60	NA	NA	NA	NA	$311.78
TR303 - System B (96 channel capacity - channels 97-192), per month	UCT3B	NA	$198.55	$132.54	$138.55	NA	NA	NA	NA	$145.21
NRC - 1st	UCT3B	NA	$640.93	$632.36	$633.94	NA	NA	NA	NA	$634.31
NRC - Add'l	UCT3B	NA	$315.03	$310.82	$311.60	NA	NA	NA	NA	$311.78
DS1 Feeder Interface, per month	UCTFS	NA	$78.43	$72.12	$77.02	NA	NA	NA	NA	$76.73
NRC 1st	UCTFS	NA	$422.74	$425.74	$418.13	NA	NA	NA	NA	$418.37
NRC Add'l	UCTFS	NA	$200.74	$198.06	$198.56	NA	NA	NA	NA	$198.67
Channel Interface - 2 Wire Voice - Loop Start , per month	TBD	NA	$2.62	$2.38	$2.68	NA	NA	NA	NA	$2.61
NRC 1st	TBD	NA	$42.39	$41.82	$41.92	NA	NA	NA	NA	$41.95
NRC Add'l	TBD	NA	$42.15	$41.58	$41.69	NA	NA	NA	NA	$41.71
Channel Interface - 2 Wire ISDN, per month	ULCC1	NA	$10.49	$9.53	$10.72	NA	NA	NA	NA	$10.43
NRC 1st	ULCC1	NA	$42.39	$41.82	$41.92	NA	NA	NA	NA	$41.95
NRC Add'l	ULCC1	NA	$42.15	$41.58	$41.69	NA	NA	NA	NA	$41.71
Channel Interface - 2 Wire Voice - Ground Start or Reverse Battery, per month	TBD	NA	$15.59	$14.17	$15.94	NA	NA	NA	NA	$15.51
. NRC 1st	TBD	NA	$42.39	$41.82	$41.92	NA	NA	NA	NA	$41.95
NRC Add'l	TBD	NA	$42.15	$41.58	$41.69	NA	NA	NA	NA	$41.71
Channel Interface - 4 Wire Voice, per month	ULCC4	NA	$9.30	$8.45	$9.50	NA	NA	NA	NA	$9.26
NRC 1st	ULCC4	NA	$42.39	$41.82	$41.92	NA	NA	NA	NA	$41.95
NRC Add'l	ULCC4	NA	$42.15	$41.58	$41.69	NA	NA	NA	NA	$41.71
Test Circuit, per month		NA	$45.46	$41.30	$46.44	NA	NA	NA	NA	$45.22
NRC 1st	UCTTC	NA	$42.39	$41.82	$41.92	NA	NA	NA	NA	$41.95
NRC Add'l	UCTTC	NA	$42.15	$41.58	$41.69	NA	NA	NA	NA	$41.71
Channel Interface - Digital 56Kbps, per month	ULCC5	NA	$13.78	$12.51	$14.08	NA	NA	NA	NA	$13.71
NRC 1st	ULCC5	NA	$42.39	$41.82	$41.92	NA	NA	NA	NA	$41.95
NRC Add'l	ULCC5	NA	$42.15	$41.58	$41.69	NA	NA	NA	NA	$41.71
Channel Interface - Digital 64Kbps, per month	ULCC6	NA	$13.78	$12.51	$14.08	NA	NA	NA	NA	$13.71
NRC 1st	ULCC6	NA	$42.39	$41.82	$41.92	NA	NA	NA	NA	$41.95
NRC Add'l	ULCC6	NA	$42.15	$41.58	$41.69	NA	NA	NA	NA	$41.71
Loop Concentration System (Inside C.O.)										
NRC - Incremental Charge - Manual Service Order - 1st	SOMAN	$27.37	TBD	$18.94	TBD	$18.14	$25.52	TBD	$44.06	TBD
NRC - Incremental Charge - Manual Service Order - Add'l	SOMAN	$12.97	TBD	$8.42	TBD	$8.06	$11.34	TBD	$13.55	TBD
Loop Channelization System - Digital Loop Carrier	TBD	NA	NA	NA	NA	NA	NA	NA	NA	NA
RC - Loop Channelization System - Digital Loop Carrier	TBD	NA	NA	NA	NA	NA	NA	$315.61	NA	NA
NRC- 1st	TBD	NA	NA	NA	NA	NA	NA	$426.48	NA	NA
NRC- Addl	TBD	NA	NA	NA	NA	NA	NA	$103.42	NA	NA
NRC- Incremental Cost - Manaul Service Order- 1st	TBD	NA	NA	NA	NA	NA	NA	$42.19	NA	NA
NRC- Incremental Cost - Manaul Service Order- Addl	TBD	NA	NA	NA	NA	NA	NA	$12.76	NA	NA
TR008 -System A (96 channel capacity - channels 1-96), per month	UCT8A	$327.44	$400.33	$316.63	$394.00	$308.74	$454.79	$375.96	$399.21	$380.06
NRC - 1st	UCT8A	$1,115.10	$1,128.75	$1,111.95	$1,116.15	$1,117.20	$1,115.10	$1,113.00	$1,119.30	$1,114.05
NRC - Add'l	UCT8A	NA	NA	NA	NA	NA	NA	NA	NA	NA
TR008 -System B (96 channel capacity - channels 97-192), per month	UCT8B	$67.41	$70.48	$65.27	$72.21	$76.58	$73.30	$65.98	$71.91	$68.71
NRC - 1st	UCT8B	$464.57	$470.41	$463.37	$465.11	$465.64	$464.71	$463.74	$466.38	$464.21
NRC - Add'l	UCT8B	NA	NA	NA	NA	NA	NA	NA	NA	NA
TR303 - System A (96 channel capacity - channels 1-96), per month	UCT3A	$375.18	$450.24	$362.87	$445.14	$385.97	$506.70	$422.68	$450.13	$428.73
NRC - 1st	UCT3A	$1,115.10	$1,128.75	$1,111.95	$1,116.15	$1,117.20	$1,115.10	$1,113.00	$1,119.30	$1,114.05
NRC - Add'l	UCT3A	NA	NA	NA	NA	NA	NA	NA	NA	NA
TR303 - System B (96 channel capacity - channels 97-192), per month	UCT3B	$111.30	$118.76	$110.02	$121.45	$129.05	$123.52	$111.17	$121.16	$115.79
NRC - 1st	UCT3B	$464.57	$470.41	$463.37	$465.11	$465.64	$464.71	$463.74	$466.38	$464.21
NRC - Add'l	UCT3B	NA	NA	NA	NA	NA	NA	NA	NA	NA

BELLSOUTH / ACCESS INTEGRATED RATES
NETWORK ELEMENTS
AND OTHER SERVICES

DESCRIPTION	USOC	AL	FL	GA	KY	LA	MS	NC	SC	TN
DS1 Interface, per month	UCTCO	$6.42	$6.47	$6.15	$403.20	$7.35	$6.99	$6.27	$6.79	$6.49
NRC 1st	UCTCO	$367.70	$372.32	$366.72	$132.18	$368.54	$367.80	$367.04	$369.13	$367.41
NRC Add'l	UCTCO	$132.03	$133.69	$130.63	$132.18	$132.33	$132.07	$131.79	$132.54	$131.92
Channel Interface - 2 Wire Voice - Loop Start , per month	TBD	$2.55	$2.66	$2.44	$2.79	$2.91	$2.77	$0.89	$2.69	$2.58
NRC 1st	TBD	$35.77	$36.23	$35.68	$35.82	$35.86	$35.78	$35.73	$35.91	$35.74
NRC Add'l	TBD	$35.55	$36.02	$35.48	$35.62	$35.66	$35.37	$35.49	$35.71	$35.54
Channel Interface - 2 Wire ISDN, per month	ULCC1	$10.19	$10.67	$9.76	$11.18	$11.66	$11.10	$9.95	$10.76	$10.30
NRC 1st	ULCC1	$35.77	$36.23	$35.68	$35.82	$35.86	$35.78	$35.71	$35.91	$35.74
NRC Add'l	ULCC1	$35.55	$36.02	$35.48	$35.62	$35.66	$35.37	$35.51	$35.71	$35.54
Channel Interface - 2 Wire Voice - Ground Start or Reverse Battery, per month	TBD	$15.15	$15.85	$14.51	$16.62	$17.33	$16.46	$14.80	$16.01	$15.32
. NRC 1st	TBD	$35.77	$36.23	$35.68	$35.82	$35.86	$35.78	$35.71	$35.91	$35.74
NRC Add'l	TBD	$35.55	$36.02	$35.48	$35.62	$35.66	$35.37	$35.51	$35.71	$35.54
Channel Interface - 4 Wire Voice, per month	ULCC4	$9.04	$9.44	$8.65	$9.91	$10.34	$9.83	$8.82	$9.55	$9.13
NRC 1st	ULCC4	$35.77	$36.23	$35.68	$35.82	$35.86	$35.78	$35.71	$35.91	$35.74
NRC Add'l	ULCC4	$35.55	$36.02	$35.48	$35.62	$35.66	$35.37	$35.51	$35.71	$35.54
Test Circuit, per month	UCTTC	$44.16	$46.14	$42.30	$48.43	$50.53	$47.85	$43.13	$46.66	$44.65
NRC 1st	UCTTC	$35.77	$36.23	$35.68	$35.82	$35.86	$35.78	$35.71	$35.91	$35.74
NRC Add'l	UCTTC	$35.55	$36.02	$35.48	$35.62	$35.66	$35.37	$35.51	$35.71	$35.54
Channel Interface - Digital 56Kbps, per month	ULCC5	TBD	TBD	TBD	TBD	TBD	TBD	TBD	TBD	TBD
NRC 1st	ULCC5	TBD	TBD	TBD	TBD	TBD	TBD	TBD	TBD	TBD
NRC Add'l	ULCC5	TBD	TBD	TBD	TBD	TBD	TBD	TBD	TBD	TBD
Channel Interface - Digital 64Kbps, per month	ULCC6	TBD	TBD	TBD	TBD	TBD	TBD	TBD	TBD	TBD
NRC 1st	ULCC6	TBD	TBD	TBD	TBD	TBD	TBD	TBD	TBD	TBD
NRC Add'l	ULCC6	TBD	TBD	TBD	TBD	TBD	TBD	TBD	TBD	TBD
DARK FIBER										
Per four fiber strands, per route mile or fraction thereof, per month	1L5DF	$59.84	$55.35	$44.22	$64.64	$65.29	$70.35	$49.88	$72.45	$52.67
NRC - Per each four-fiber dark fiber arrangement - 1st	1L5DF	$2,518.66	$1,715.61	$1,355.29	$2,304.00	$1,685.19	$2,389.99	$2,277.00	$2,406.00	$1,672.44
NRC - Per each four-fiber dark fiber arrangement - Add'l	1L5DF	$835.08	$622.68	$273.69	$740.93	$580.11	$804.32	$733.08	$765.30	$509.09
NOTES:										
1 In states where a specific NRC for customer transfer, feature additions and changes is not stated, the applicable NRC from the appropriate tariff applies.										
2 Effective May 1, 2000 statewide rates will be replaced by Deaveraged Loop Rates by Zone where available. Until approximately December 31, 2000 or until such time that BellSouth billing systems have been developed to handle the new zone rate structure, BellSouth will bill at the Zone 1 Deaveraged rate level only. After December 31, 2000 or such time that the billing systems have been developed to handle the new zone rate structure, BellSouth will begin billing pursuant to ACCESS Integrated's interconnection agreement. The status of rates shown by state is as follows:										
Alabama - Proposed rates.										
Florida - Interim rates established in Joint Stipulation and signed by parties in December, 1999; Docket No. 990649-TP. These rates will be replaced by permanent rates in October, 2000.										
Georgia - Rates established in Joint Stipulation and signed by parties in December, 2000; Docket Nos. 5825-U, 7061-U, and 10692-U.										
Kentucky - Rates established in Joint Stipulation and signed by parties in January, 2000; Admin. Case No. 382.										
Louisiana - Proposed rates.										
Mississippi - Proposed rates.										
North Carolina - To be decided.										
South Carolina - Proposed rates.										
Tennessee - Proposed rates.										

BELLSOUTH / ACCESS INTEGRATED RATES
NETWORK ELEMENTS
AND OTHER SERVICES

DESCRIPTION			**USOC**	**AL**	**FL**	**GA**	**KY**	**LA**	**MS**	**NC**	**SC**	**TN**
		3	All rates are interim and subject to true-up.									

DESCRIPTION	USOC	AL	FL	GA	KY	LA	MS	NC	SC	TN
LOCAL EXCHANGE SWITCHING (PORTS)										
2-Wire Analog Line Port (Res., Bus.), per month										
2- wire voice unbundled port - residence	UEPRL	$2.07	2.00 - Note 1	1.85 - Note 1	2.61 - Note 1	$2.20	$2.11	$2.19	$2.35	1.90 - Note 1
2-wire voice unbundled port with caller ID - residence	UEPRC	$2.07	$2.00	$1.85	$2.61	$2.20	$2.11	$2.00	$2.35	$1.90
2-wire voice unbundled port outgoing only - residence	UEPRO	$2.07	$2.00	$1.85	$2.61	$2.20	$2.11	$2.00	$2.35	$1.90
2-wire voice unbundled area plus port with caller ID - residence	UEPRM	$2.07	$2.00	$1.85	$2.61	$2.20	$2.11	$2.00	$2.35	$1.90
2-wire voice unbundled Florida area calling with caller ID - residence	UEPAF	NA	$2.00	NA	NA	NA	NA	NA	NA	NA
2-wire voice unbundled Louisiana Area Plus with caller ID - residence (RUL)	UEPAG	NA	NA	NA	NA	$2.20	NA	NA	NA	NA
2-wire voice unbundled Louisiana Area Plus with caller ID - residence (AC7)	UEPAH	NA	NA	NA	NA	$2.20	NA	NA	NA	NA
2-wire voice unbundled South Carolina Area Calling port with Caller ID - residence	UEPAJ	NA	NA	NA	NA	NA	NA	NA	$2.35	NA
2-wire voice unbundled Tennessee Area Calling port with Caller ID - residence	UEPAK	NA	NA	NA	NA	NA	NA	NA	NA	$1.90
2-wire voice unbundled Tennessee Area Calling port with Caller ID - residence	UEPAL	NA	NA	NA	NA	NA	NA	NA	NA	$1.90
2-wire voice unbundled Tennessee Area Calling port with Caller ID - residence	UEPAM	NA	NA	NA	NA	NA	NA	NA	NA	$1.90
2-wire voice unbundled Tennessee Area Calling port with Caller ID - residence	UEPAN	NA	NA	NA	NA	NA	NA	NA	NA	$1.90
2-wire voice unbundled Tennessee Area Calling port with Caller ID - residence	UEPAO	NA	NA	NA	NA	NA	NA	NA	NA	$1.90
2-wire voice unbundled res, low usage line port with Caller ID (LUM)	UEPAP	$2.07	$2.00	$1.85	$2.61	$2.20	$2.11	$2.00	$2.35	$1.90
LOCAL NUMBER PORTABILITY (REQUIRES ONE PER PORT)	LNPCX									
2-wire voice unbundled port without Caller ID	UEPBL	$2.07	$2.00	$1.85	$2.61	$2.20	$2.11	$2.00	$2.35	$1.90
2-wire voice unbundled port with unbundled port with Caller+E484 ID	UEPBC	$2.07	$2.00	$1.85	$2.61	$2.20	$2.11	$2.00	$2.35	$1.90
2-wire voice unbundled outgoing only port	UEPBO	$2.07	$2.00	$1.85	$2.61	$2.20	$2.11	$2.00	$2.35	$1.90
2-wire voice unbundled area plus port with Caller ID	UEPBM	$2.07	$2.00	$1.85	$2.61	$2.20	$2.11	$2.00	$2.35	$1.90
2-wire voice unbundled incoming only port with Caller ID	UEPB1	$2.07	$2.00	$1.85	$2.61	$2.20	$2.11	$2.00	$2.35	$1.90
2-wire voice unbundled LA Bus Area Calling Port with Caller ID (BUC)	UEPAA	NA	NA	NA	NA	$2.20	NA	NA	NA	NA
2-wire voice unbundled SC Bus Area Calling Port with Caller ID (LMB)	UEPAB	NA	NA	NA	NA	NA	NA	NA	$2.35	NA
2-wire voice unbundled TN Bus 2-Way Area Calling Port Economy Option (TACC1)	UEPAC	NA	NA	NA	NA	NA	NA	NA	NA	$1.90
2-wire voice unbundled TN Bus 2-Way Area Calling Port Standard Option (TACC2)	UEPAD	NA	NA	NA	NA	NA	NA	NA	NA	$1.90
2-wire voice unbundled TN Bus 2-WAY Collierville and Memphis Local Calling Port (B2F)	UEPAE	NA	NA	NA	NA	NA	NA	NA	NA	$1.90
LOCAL NUMBER PORTABILITY (REQUIRES ONE PER PORT)	LNPCX									
Non-Recurring Charges (NRC) - 1st (Residence)										
2- wire voice unbundled port - residence	UEPRL	$21.93	$38.00	$17.16	$37.78	$16.43	$22.98	$21.60	$24.98	BST GSST A4.3.2
2-wire voice unbundled port with caller ID - residence	UEPRC	$21.93	$38.00	$17.16	$37.78	$16.43	$22.98	$24.04	$24.98	BST GSST A4.3.3
2-wire voice unbundled port outgoing only - residence	UEPRO	$21.93	$38.00	$17.16	$37.78	$16.43	$22.98	$24.04	$24.98	BST GSST A4.3.4
2-wire voice unbundled area plus port with caller ID - residence	UEPRM	$21.93	$38.00	$17.16	$37.78	$16.43	$22.98	$24.04	$24.98	BST GSST A4.3.5
2-wire voice unbundled Florida area calling with caller ID - residence	UEPAF	NA	$38.00	NA	NA	NA	NA	NA	NA	NA
2-wire voice unbundled Louisiana Area Plus with caller ID - residence (RUL)	UEPAG	NA	NA	NA	NA	$16.43	NA	NA	NA	NA
2-wire voice unbundled Louisiana Area Plus with caller ID - residence (AC7)	UEPAH	NA	NA	NA	NA	$16.43	NA	NA	NA	NA
2-wire voice unbundled South Carolina Area Calling port with Caller ID - residence (LW8)	UEPAJ	NA	NA	NA	NA	NA	NA	NA	$24.98	NA
2-wire voice unbundled Tennessee Area Calling port with Caller ID - residence (F2R)	UEPAK	NA	NA	NA	NA	NA	NA	NA	NA	BST GSST A4.3.10
2-wire voice unbundled Tennessee Area Calling port with Caller ID - residence (TACER)	UEPAL	NA	NA	NA	NA	NA	NA	NA	NA	BST GSST A4.3.11
2-wire voice unbundled Tennessee Area Calling port with Caller ID - residence (TACSR)	UEPAM	NA	NA	NA	NA	NA	NA	NA	NA	BST GSST A4.3.12

DESCRIPTION	USOC	AL	FL	GA	KY	LA	MS	NC	SC	TN
2-wire voice unbundled Tennessee Area Calling port with Caller ID - residence (1MF2X)	UEPAN	NA	NA	NA	NA	NA	NA	NA	NA	BST GSST A4.3.13
2-wire voice unbundled Tennessee Area Calling port with Caller ID - residence (2MR)	UEPAO	NA	NA	NA	NA	NA	NA	NA	NA	BST GSST A4.3.14
2-wire voice unbundled Res Low Usage Line Port with Caller+E563 ID (LUM)	UEPAP	$21.93	$38.00	$17.16	$37.78	$16.43	$22.98	$24.04	$24.98	BST GSST A4.3.15
NRC - Add'l (Residence)										
2- wire voice unbundled port - residence -	UEPRL	$21.93	$15.00	$17.16	$37.78	$16.43	$22.98	$21.60	$24.98	BST GSST A4.3.3
2-wire voice unbundled port with caller ID - residence	UEPRC	$21.93	$15.00	$17.16	$37.78	$16.43	$22.98	$9.08	$24.98	BST GSST A4.3.4
2-wire voice unbundled port outgoing only - residence	UEPRO	$21.93	$15.00	$17.16	$37.78	$16.43	$22.98	$9.08	$24.98	BST GSST A4.3.5
2-wire voice unbundled area plus port with caller ID - residence	UEPRM	$21.93	$15.00	$17.16	$37.78	$16.43	$22.98	$9.08	$24.98	BST GSST A4.3.6
2-wire voice unbundled Florida area calling with caller ID - residence	UEPAF	NA	$15.00	NA	NA	NA	NA	NA	NA	NA
2-wire voice unbundled Louisiana Area Plus with caller ID - residence (RUL)	UEPAG	NA	NA	NA	NA	$16.43	NA	NA	NA	NA
2-wire voice unbundled Louisiana Area Plus with caller ID - residence (AC7)	UEPAH	NA	NA	NA	NA	$16.43	NA	NA	NA	NA
2-wire voice unbundled South Carolina Area Calling port with Caller ID - residence (LW8)	UEPAJ	NA	NA	NA	NA	NA	NA	NA	$24.98	NA
2-wire voice unbundled Tennessee Area Calling port with Caller ID - residence (F2R)	UEPAK	NA	NA	NA	NA	NA	NA	NA	NA	BST GSST A4.3.11
2-wire voice unbundled Tennessee Area Calling port with Caller ID - residence (TACER)	UEPAL	NA	NA	NA	NA	NA	NA	NA	NA	BST GSST A4.3.12
2-wire voice unbundled Tennessee Area Calling port with Caller ID - residence (TACSR)	UEPAM	NA	NA	NA	NA	NA	NA	NA	NA	BST GSST A4.3.13
2-wire voice unbundled Tennessee Area Calling port with Caller ID - residence (1MF2X)	UEPAN	NA	NA	NA	NA	NA	NA	NA	NA	BST GSST A4.3.14
2-wire voice unbundled Tennessee Area Calling port with Caller ID - residence (2MR)	UEPAO	NA	NA	NA	NA	NA	NA	NA	NA	BST GSST A4.3.15
2-wire voice unbundled Res Low Usage Line Port with Caller ID (LUM)	UEPAP	$21.93	$15.00	$17.16	$37.78	$16.43	$22.98	$9.08	$24.98	BST GSST A4.3.16
NRC - 1st (Business)										
2-wire Voice Unbundled Port without Caller ID	UEPBL	$21.93	$38.00	$17.16	$37.55	$16.43	$22.98	$21.60	$24.98	BST GSST A4.3.4
2-wire voice unbundled port with Caller ID	UEPBC	$21.93	$38.00	$17.16	$37.55	$16.43	$22.98	$24.04	$24.98	BST GSST A4.3.5
2-wire voice unbundled outgoing only port	UEPBO	$21.93	$38.00	$17.16	$37.55	$16.43	$22.98	$24.04	$24.98	BST GSST A4.3.6
2-wire voice unbundled Area Plus Port with Caller ID	UEPBM	$21.93	$38.00	$17.16	$37.55	$16.43	$22.98	$24.04	$24.98	BST GSST A4.3.7
2-wire voice unbundled Incoming only Port with Caller ID	UEPB1	$21.93	$38.00	$17.16	$37.55	$16.43	$22.98	$24.04	$24.98	BST GSST A4.3.8
2-wire voice unbundled LA Bus Area Calling Port with Caller ID (BUC)	UEPAA	NA	NA	NA	NA	$16.43	NA	NA	NA	NA
2-wire voice unbundled SC Bus Area Calling Port with Caller ID+E587 (LMB)	UEPAB	NA	NA	NA	NA	NA	NA	NA	$24.98	NA
2-wire voice unbundled TN Bus 2-way Area Calling Port Economy Option (TACC1)	UEPAC	NA	NA	NA	NA	NA	NA	NA	NA	BST GSST A4.3.11
2-wire voice unbundled TN Bus 2-way Area Calling Port Standard Option (TACC2)	UEPAD	NA	NA	NA	NA	NA	NA	NA	NA	BST GSST A4.3.12

DESCRIPTION	USOC	AL	FL	GA	KY	LA	MS	NC	SC	TN
2-wire voice unbundled TN Bus 2-way Collierville and Memphis Local Calling Port (B2F)	UEPAE	NA	NA	NA	NA	NA	NA	NA	NA	BST GSST A4.3.13
NRC - Add'l (Business)	UEPBL	$21.93	$15.00	$17.16	$37.55	$16.43	$22.98	$9.08	$24.98	BST GSST
2-wire voice unbundled port without Caller ID	UEPBL	$21.93	$15.00	$17.16	$37.55	$16.43	$22.98	$21.60	$24.98	BST GSST A4.3.5
2-wire voice unbundled port with Caller ID	UEPBC	$21.93	$15.00	$17.16	$37.55	$16.43	$22.98	$9.08	$24.98	BST GSST A4.3.6
2-wire voice unbundled outgoing only port	UEPBO	$21.93	$15.00	$17.16	$37.55	$16.43	$22.98	$9.08	$24.98	BST GSST A4.3.7
2-wire voice unbundled Area Plus Port with Caller ID	UEPBM	$21.93	$15.00	$17.16	$37.55	$16.43	$22.98	$9.08	$24.98	BST GSST A4.3.8
2-wire voice unbundled incoming only port with Caller ID	UEPB1	$21.93	$15.00	$17.16	$37.55	$16.43	$22.98	$9.08	$24.98	BST GSST A4.3.9
2-wire voice unbundled LA Bus Area Calling Port with Caller ID (BUC)	UEPAA	NA	NA	NA	NA	$16.43	NA	NA	NA	NA
2-wire voice unbundled SC Bus Area Calling Port with Caller ID (LMB)	UEPAB	NA	NA	NA	NA	NA	NA	NA	$24.98	NA
2-wire voice unbundled TN Bus 2-way Area Calling Port Economy Option (TACC1)	UEPAC	NA	NA	NA	NA	NA	NA	NA	NA	BST GSST A4.3.12
2-wire voice unbundled TN Bus 2-way Area Calling Port Standard Option (TACC2)	UEPAD	NA	NA	NA	NA	NA	NA	NA	NA	BST GSST A4.3.13
2-wire voice unbundled TN Bus 2-way Collierville and Memphis Locall Calling Port (B2F)	UEPAE	NA	NA	NA	NA	NA	NA	NA	NA	BST GSST A4.3.14
NRC - Disconnect Charge - 1st										
2- wire voice unbundled port - residence		$6.21	NA	NA	NA	$4.38	$6.56	NA	NA	NA
2-wire voice unbundled port with caller ID - residence		$6.21	NA	NA	NA	$4.38	$6.56	NA	NA	NA
2-wire voice unbundled port outgoing only - residence		$6.21	NA	NA	NA	$4.38	$6.56	NA	NA	NA
2-wire voice unbundled area plus port with caller ID - residence		$6.21	NA	NA	NA	$4.38	$6.56	NA	NA	NA
2-wire voice unbundled Florida area calling with caller ID - residence		NA	NA	NA	NA	NA	NA	NA	NA	NA
2-wire voice unbundled Louisiana Area Plus with caller ID - residence (RUL)		NA	NA	NA	NA	$4.38	NA	NA	NA	NA
2-wire voice unbundled Louisiana Area Plus with caller ID - residence (AC7)		NA	NA	NA	NA	$4.38	NA	NA	NA	NA
2-wire voice unbundled South Carolina Area Calling port with Caller ID - residence		NA	NA	NA	NA	NA	NA	NA	NA	NA
2-wire voice unbundled Tennessee Area Calling port with Caller ID - residence		NA	NA	NA	NA	NA	NA	NA	NA	NA
2-wire voice unbundled Tennessee Area Calling port with Caller ID - residence		NA	NA	NA	NA	NA	NA	NA	NA	NA
2-wire voice unbundled Tennessee Area Calling port with Caller ID - residence		NA	NA	NA	NA	NA	NA	NA	NA	NA
2-wire voice unbundled Tennessee Area Calling port with Caller ID - residence		NA	NA	NA	NA	NA	NA	NA	NA	NA
2-wire voice unbundled Tennessee Area Calling port with Caller ID - residence		NA	NA	NA	NA	NA	NA	NA	NA	NA
2-wire voice unbundled Res Low Usage Line Port with Caller ID (LUM)		$6.21	NA	NA	NA	$4.38	$6.56	NA	NA	NA
2-wire voice unbundled port without Caller ID		$6.21	NA	NA	NA	$4.38	$6.56	NA	NA	NA
2-wire voice unbundled port with Caller ID		$6.21	NA	NA	NA	$4.38	$6.56	NA	NA	NA
2-wire voice unbundled outgoing only Port		$6.21	NA	NA	NA	$4.38	$6.56	NA	NA	NA
2-wire voice unbundled Area Plus Port with Caller ID		$6.21	NA	NA	NA	$4.38	$6.56	NA	NA	NA
2-wire voice unbundled Incoming only Port with Caller ID		$6.21	NA	NA	NA	$4.38	$6.56	NA	NA	NA
2-wire voice unbundled LA Bus Area Calling Port with Caller ID (BUC)		NA	NA	NA	NA	$4.38	NA	NA	NA	NA
2-wire voice unbundles SC Bus Area Calling Port with Caller ID (LMB)		NA	NA	NA	NA	NA	NA	NA	NA	NA
2-wire voice unbundled TN Bus 2-way Area Calling Port Economy Option (TACC1)		NA	NA	NA	NA	NA	NA	NA	NA	NA
2-wire voice unbundled TN Bus 2-way Area Calling Port Standard Option (TACC2)		NA	NA	NA	NA	NA	NA	NA	NA	NA
2-wire voice unbundled TN Bus 2-Way Collierville and Memphis Local Calling Port		NA	NA	NA	NA	NA	NA	NA	NA	NA
NRC - Disconnect Charge - Add'l										
2- wire voice unbundled port - residence		$6.21	NA	NA	NA	$4.38	$6.56	NA	NA	NA
2-wire voice unbundled port with caller ID - residence		$6.21	NA	NA	NA	$4.38	$6.56	NA	NA	NA
2-wire voice unbundled port outgoing only - residence		$6.21	NA	NA	NA	$4.38	$6.56	NA	NA	NA

DESCRIPTION	USOC	AL	FL	GA	KY	LA	MS	NC	SC	TN
2-wire voice unbundled area plus port with caller ID - residence		$6.21	NA	NA	NA	$4.38	$6.56	NA	NA	NA
2-wire voice unbundled Florida area calling with caller ID - residence		NA	NA	NA	NA	NA	NA	NA	NA	NA
2-wire voice unbundled Louisiana Area Plus with caller ID - residence (RUL)		NA	NA	NA	NA	$4.38	NA	NA	NA	NA
2-wire voice unbundled Louisiana Area Plus with caller ID - residence (AC7)		NA	NA	NA	NA	$4.38	NA	NA	NA	NA
2-wire voice unbundled South Carolina Area Calling port with Caller ID - residence		NA	NA	NA	NA	NA	NA	NA	NA	NA
2-wire voice unbundled Tennessee Area Calling port with Caller ID - residence		NA	NA	NA	NA	NA	NA	NA	NA	NA
2-wire voice unbundled Tennessee Area Calling port with Caller ID - residence		NA	NA	NA	NA	NA	NA	NA	NA	NA
2-wire voice unbundled Tennessee Area Calling port with Caller ID - residence		NA	NA	NA	NA	NA	NA	NA	NA	NA
2-wire voice unbundled Tennessee Area Calling port with Caller ID - residence		NA	NA	NA	NA	NA	NA	NA	NA	NA
2-wire voice unbundled Tennessee Area Calling port with Caller ID - residence		NA	NA	NA	NA	$4.38	$6.56	NA	NA	NA
2-wire voice unbundled Res Low Usage Line Port with Caller ID (LUM)		$6.21	NA	NA	NA	$4.38	$6.56	NA	NA	NA
2-wire voice unbundled port without Caller ID		$6.21	NA	NA	NA	$4.38	$6.56	NA	NA	NA
2-wire voice unbundled port with Caler ID		$6.21	NA	NA	NA	$4.38	$6.56	NA	NA	NA
2-wire voice unbundled outgoing only port		$6.21	NA	NA	NA	$4.38	$6.56	NA	NA	NA
2-wire voice unbundled Area Plus Port with Caller ID		$6.21	NA	NA	NA	$4.38	$6.56	NA	NA	NA
2-wire voice unbundled incoming only port with Caller ID		$6.21	NA	NA	NA	$4.38	$6.56	NA	NA	NA
2-wire voice unbundled LA Bus Area Calling Port with Caller ID (BUC)		NA	NA	NA	NA	$4.38	NA	NA	NA	NA
2-wire voice unbundled SC Bus Area Calling Port with Caller ID (LMB)		NA	NA	NA	NA	NA	NA	NA	NA	NA
2-wire voice unbundled TN Bus 2-way Area Calling Port Economy Option		NA	NA	NA	NA	NA	NA	NA	NA	NA
2-wire voice unbundled TN Bus 2-way Area Calling Port Standard Option (TACC2)		NA	NA	NA	NA	NA	NA	NA	NA	NA
2-wire voice unbundled TN Bus 2-way Collierville and Memphis Local Calling Port		NA	NA	NA	NA	NA	NA	NA	NA	NA
NRC - Incremental Charge - Manual Service Order - 1st	SOMAN	$27.37	NA	$18.94	NA	$18.14	$25.52	$26.94	$44.42	NA
NRC - Incremental Charge - Manual Service Order - Add'l	SOMAN	$12.97	NA	$8.42	NA	$8.06	$11.34	$12.76	$14.63	NA
NRC - Incremental Charge - Manual Service Order - Disconnect - 1st	SOMAN	$17.77	NA	NA	NA	$10.39	$16.06	NA	NA	NA
NRC - Incremental Charge - Manual Service Order - Disconnect - Add'l	SOMAN	$1.44	NA	NA	NA	NA	NA	NA	NA	NA
All available features, per month	UEPVF	$5.55	NA	NA	NA	$8.28	$6.75	NA	$6.29	NA
NRC - 1st (all types)		$24.72	NA	NA	NA	NA	$21.42	NA	$36.24	NA
NRC - Add'l (all types)		$24.72	NA	NA	NA	NA	$21.42	NA	$36.24	NA
NRC - Disconnect Charge - 1st		$18.41	NA	NA	NA	NA	$19.68	NA	NA	NA
NRC - Disconnect Charge - Add'l		$18.41	NA	NA	NA	NA	$19.68	NA	NA	NA
NRC - Incremental Charge - Manual Service Order - 1st	SOMAN	$27.37	NA	NA	NA	NA	$25.52	NA	$44.42	NA
NRC - Incremental Charge - Manual Service Order - Add'l	SOMAN	$12.97	NA	NA	NA	NA	$11.34	NA	$14.63	NA
NRC - Incremental Charge - Manual Service Order - Disconnect - 1st	SOMAN	$17.77	NA	NA	NA	NA	$16.06	NA	NA	NA
NRC - Incremental Charge - Manual Service Order - Disconnect - Add'l	SOMAN	$1.44	NA	NA	NA	NA	NA	NA	NA	NA
Three available feature, per month	UEPVF	NA	NA	NA	NA	$8.28	$3.31	NA	$3.03	NA
NRC - 1st (all types)		NA	NA	NA	NA	NA	$3.06	NA	$4.53	NA
NRC - Add'l (all types)		NA	NA	NA	NA	NA	$3.06	NA	$4.53	NA
NRC - Disconnect Charge - 1st		NA	NA	NA	NA	NA	$8.20	NA	NA	NA
NRC - Disconnect Charge - Add'l		NA	NA	NA	NA	NA	$8.20	NA	NA	NA
NRC - Incremental Charge - Manual Service Order - 1st	SOMAN	NA	NA	NA	NA	NA	$25.52	NA	$44.42	NA
NRC - Incremental Charge - Manual Service Order - Add'l	SOMAN	NA	NA	NA	NA	NA	$11.34	NA	$14.63	NA
NRC - Incremental Charge - Manual Service Order - Disconnect - 1st	SOMAN	NA	NA	NA	NA	NA	$16.06	NA	NA	NA
NRC - Incremental Charge - Manual Service Order - Disconnect - Add'l	SOMAN	NA	NA	NA	NA	NA	NA	NA	NA	NA
4-Wire Analog VG Port, per month	UEP4A	NA	$9.14	$8.47	NA	$10.13	$9.60	$8.69	$2.28	NA
NRC - 1st	UEP4A	NA	$5.86	$17.16	NA	$16.43	$22.98	$21.60	$3.50	NA
NRC - Add'l	UEP4A	NA	$5.86	$17.16	NA	$16.43	$22.98	$21.60	$3.50	NA
NRC - Disconnect Charge - 1st	BFR	NA	NA	NA	NA	$3.77	$6.56	NA	NA	NA
NRC - Disconnect Charge - Add'l	BFR	NA	NA	NA	NA	$3.77	$6.56	NA	NA	NA
NRC - Incremental Charge - Manual Service Order - 1st	SOMAN	NA	NA	$18.94	NA	$18.14	$25.52	$26.94	NA	NA
NRC - Incremental Charge - Manual Service Order - Add'l	SOMAN	NA	NA	$8.42	NA	$8.06	$11.34	$12.76	NA	NA
NRC - Incremental Charge - Manual Service Order - Disconnect - 1st	SOMAN	NA	NA	NA	NA	$8.94	$16.06	NA	NA	NA
2-Wire DID Port, per month	UEPP2	$12.08	TBD	$11.35	NA	$13.12	$14.63	$12.36	$12.08	$12.68

DESCRIPTION	USOC	AL	FL	GA	KY	LA	MS	NC	SC	TN
NRC - 1st	UEPP2	$50.00	TBD	$61.91	NA	$59.28	$83.09	$81.84	$50.00	BST GSST A4.3.1
NRC - Add'l	UEPP2	$18.00	TBD	$61.91	NA	$59.28	$83.09	$81.84	$50.00	BST GSST A4.3.1
NRC - Disconnect Charge - 1st	UEPP2	NA	NA	NA	NA	$9.20	$13.48	NA	NA	NA
NRC - Disconnect Charge - Add'l	UEPP2	NA	NA	NA	NA	$9.20	$13.48	NA	NA	NA
NRC - Incremental Charge - Manual Service Order - 1st	SOMAN	NA	NA	$18.94	NA	$18.14	$25.52	$26.94	NA	NA
NRC - Incremental Charge - Manual Service Order - Add'l	SOMAN	NA	NA	$8.42	NA	$8.06	$11.34	$12.76	NA	NA
NRC - Incremental Charge - Manual Service Order - Disconnect - 1st	SOMAN	NA	NA	NA	NA	$10.39	$16.07	NA	NA	NA
4-Wire DS1 Port w/DID capability, per month	UEPDD	$130.23	$125.00	$120.80	NA	$149.27	$146.46	$123.65	$130.23	$120.00
NRC - 1st	UEPDD	$50.00	$112.00	$89.44	NA	$85.63	$117.81	$116.59	$60.00	To be negotiated
NRC - Add'l	UEPDD	$18.00	$91.00	$52.46	NA	$50.23	$71.18	$69.92	$60.00	To be negotiated
NRC - Disconnect Charge - 1st	UEPDD	NA	NA	NA	NA	$8.82	$12.94	NA	NA	NA
NRC - Disconnect Charge - Add'l	UEPDD	NA	NA	NA	NA	$8.82	$12.94	NA	NA	NA
NRC - Incremental Charge - Manual Service Order - 1st	SOMAN	NA	NA	$18.94	NA	$18.14	$25.52	$26.94	NA	NA
NRC - Incremental Charge - Manual Service Order - Add'l	SOMAN	NA	NA	$8.42	NA	$8.06	$11.34	$12.76	NA	NA
NRC - Incremental Charge - Manual Service Order - Disconnect - 1st	SOMAN	NA	NA	NA	NA	$10.39	$16.06	NA	NA	NA
2-Wire ISDN Port(2) (3), per month	U1PMA	$16.42	$13.00	$13.47	$12.33	$23.33	$51.91	$24.50	$33.74	$1.90
NRC - 1st	U1PMA	$63.24	$88.00	$47.37	$90.48	$45.35	$63.59	$62.29	$65.79	BST GSST A4.3.1
NRC - Add'l	U1PMA	$63.24	$66.00	$47.37	$84.53	$45.35	$63.59	$62.29	$65.79	BST GSST A4.3.1
NRC - Disconnect Charge - 1st	U1PMA	$5.69	NA	NA	NA	$4.31	$7.04	NA	NA	NA
NRC - Disconnect Charge - Add'l	U1PMA	$5.69	NA	NA	NA	$4.31	$7.04	NA	NA	NA
NRC - Incremental Charge - Manual Service Order - 1st	SOMAN	$56.19	NA	$39.98	NA	$38.29	$53.87	$55.30	$67.52	NA
NRC - Incremental Charge - Manual Service Order - Add'l	SOMAN	$56.19	NA	$39.98	NA	$38.29	$53.87	$55.30	$67.52	NA
NRC - Incremental Charge - Manual Service Order - Disconnect - 1st	SOMAN	$12.97	NA	NA	NA	$6.65	$11.34	NA	NA	NA
NRC - Incremental Charge - Manual Service Order - Disconnect - Add'l	SOMAN	$12.97	NA	NA	NA	$6.65	$11.34	NA	NA	NA
NRC - User Profile per B Channel **(4)**	U1UMA	NA	NA	NA	$5.61	NA	NA	NA	NA	NA
2-Wire ISDN Port(2) (3) including all available features, per month	U1PMA	NA	NA	NA	NA	NA	NA	NA	$38.68	NA
NRC - 1st	U1PMA	NA	NA	NA	NA	NA	NA	NA	$106.40	NA
NRC - Add'l	U1PMA	NA	NA	NA	NA	NA	NA	NA	$106.40	NA
NRC - Incremental Charge - Manual Service Order - 1st	SOMAN	NA	NA	NA	NA	NA	NA	NA	$67.52	NA
NRC - Incremental Charge - Manual Service Order - Add'l	SOMAN	NA	NA	NA	NA	NA	NA	NA	$67.52	NA
2-Wire ISDN Port(2) (3) including three available features, per month	U1PMA	NA	NA	NA	NA	NA	NA	NA	$36.01	NA
NRC - 1st	U1PMA	NA	NA	NA	NA	NA	NA	NA	$70.32	NA
NRC - Add'l	U1PMA	NA	NA	NA	NA	NA	NA	NA	$70.32	NA
NRC - Incremental Charge - Manual Service Order - 1st	SOMAN	NA	NA	NA	NA	NA	NA	NA	$67.52	NA
NRC - Incremental Charge - Manual Service Order - Add'l	SOMAN	NA	NA	NA	NA	NA	NA	NA	$67.52	NA
4-Wire ISDN DS1 Port, per month	UEPEX	$186.02	NA	$163.16	NA	$194.72	$213.21	$179.75	$214.79	$308.00
NRC - 1st	UEPEX	$244.85	NA	$186.80	NA	$181.89	$244.12	$241.63	$278.37	To be negotiated
NRC - Add'l	UEPEX	$244.85	NA	$186.80	NA	$181.89	$244.12	$241.63	$278.37	To be negotiated
NRC - Disconnect Charge - 1st	UEPEX	$51.19	NA	NA	NA	$27.11	$53.32	NA	NA	NA
NRC - Disconnect Charge - Add'l	UEPEX	$51.19	NA	NA	NA	$27.11	$53.32	NA	NA	NA
NRC - Incremental Charge - Manual Service Order - 1st	SOMAN	$54.75	NA	$37.88	NA	$33.18	$51.03	$53.89	$65.48	NA
NRC - Incremental Charge - Manual Service Order - Add'l	SOMAN	$54.75	NA	$37.88	NA	$33.18	$51.03	$53.89	$65.48	NA
NRC - Incremental Charge - Manual Service Order - Disconnect - 1st	SOMAN	$11.53	NA	NA	NA	$7.73	$8.51	NA	NA	NA
NRC - Incremental Charge - Manual Service Order - Disconnect - Add'l	SOMAN	$11.53	NA	NA	NA	$7.73	$8.51	NA	NA	NA
4-Wire ISDN DS1 Port including all available features, per month	UEPEX	NA	NA	NA	$275.48	NA	NA	NA	$251.00	NA
NRC - 1st	UEPEX	NA	NA	NA	$181.27	NA	NA	NA	$311.73	NA

DESCRIPTION	USOC	AL	FL	GA	KY	LA	MS	NC	SC	TN
NRC - Add'l	UEPEX	NA	NA	NA	$116.42	NA	NA	NA	$311.73	NA
NRC - Incremental Charge - Manual Service Order - 1st	SOMAN	NA	NA	NA	NA	NA	NA	NA	$65.48	NA
NRC - Incremental Charge - Manual Service Order - Add'l	SOMAN	NA	NA	NA	NA	NA	NA	NA	$65.48	NA
2-Wire Analog Line Port (PBX), per month										
2 WIRE VOICE UNBUNDLED COMBINATION 2-WAY PBX TRUNK - Residence	UEPRD	$2.07	$2.00	$1.85	$2.61	$2.20	$2.11	$2.18	$2.35	$1.90
LINE SIDE UNBUNDLED COMBINATION 2-WAY PBX TRUNK - BUSINESS	UEPPC	$2.07	$2.00	$1.85	$2.61	$2.20	$2.11	$2.00	$2.35	$1.90
LINE SIDE UNBUNDLED OUTWARD PBX TRUNK - BUSINESS	UEPPO	$2.07	$2.00	$1.85	$2.61	$2.20	$2.11	$2.00	$2.35	$1.90
LINE SIDE UNBUNDLED INCOMING PBX TRUNK - BUSINESS	UEPP1	$2.07	$2.00	$1.85	$2.61	$2.20	$2.11	$2.00	$2.35	$1.90
LONG DISTANCE TERMINAL PBX TRUNK-BUSINESS	UEPLD	$2.07	$2.00	$1.85	$2.61	$2.20	$2.11	$2.00	$2.35	$1.90
TN 2-WAY CALLING PLAN PBX TRUNK - BUSINESS	UEPT2	$2.07	$2.00	$1.85	$2.61	$2.20	$2.11	$2.00	$2.35	$1.90
TN OUTWARD CALLING PLAN PBX TRUNK - BUSINESS	UEPTO	$2.07	$2.00	$1.85	$2.61	$2.20	$2.11	$2.00	$2.35	$1.90
2-WIRE VOICE UNBUNDLED 2-WAY COMBINATION PBX ALABAMA CALLING	UEPA2	$2.07	NA	NA	NA	NA	NA	NA	NA	NA
2-WIRE VOICE UNBUNDLED 2-WAY COMBINATION PBX LOUISIANA	UEPL2	NA	NA	NA	NA	$2.20	NA	NA	NA	NA
2-WIRE VOICE UNBUNDLED PBX LD TERMINAL PORTS	UEPLD	$2.07	$2.00	$1.85	$2.61	$2.20	$2.11	$2.00	$2.35	$1.90
2-WIRE VOICE UNBUNDLED 2-WAY COMBINATION PBX TENNESSEE	UEPT2	NA	NA	NA	NA	NA	NA	NA	NA	$1.90
2-WIRE VOICE UNBUNDLED 1-WAY OUTGOING PBX TENNESSEE CALLING	UEPTO	NA	NA	NA	NA	NA	NA	NA	NA	$1.90
2-WIRE VOICE UNBUNDLED 2-WAY COMBINATION PBX USAGE PORT	UEPXA	$2.07	$2.00	$1.85	$2.61	$2.20	$2.11	$2.00	$2.35	$1.90
2-WIRE VOICE UNBUNDLED PBX TOLL TERMINAL HOTEL PORTS	UEPXB	$2.07	$2.00	$1.85	$2.61	$2.20	$2.11	$2.00	$2.35	$1.90
2-WIRE VOICE UNBUNDLED PBX LD DDD TERMINALS PORT	UEPXC	$2.07	$2.00	$1.85	$2.61	$2.20	$2.11	$2.00	$2.35	$1.90
2-WIRE VOICE UNBUNDLED PBX LD TERMINAL SWITCHBOARD PORT	UEPXD	$2.07	$2.00	$1.85	$2.61	$2.20	$2.11	$2.00	$2.35	$1.90
2-WIRE VOICE UNBUNDLED PBX LD TERMINAL SWITCHBOARD IDD	UEPXE	$2.07	$2.00	$1.85	$2.61	$2.20	$2.11	$2.00	$2.35	$1.90
2-WIRE VOICE UNBUNDLED 2-WAY PBX KENTUCKY ROOM AREA CALLING PORT WITHOUT LUD	UEPXF	NA	NA	NA	$2.61	NA	NA	NA	NA	NA
2-WIRE VOICE UNBUNDLED PBX KENTUCKY LUD AREA CALLING PORT	UEPXG	NA	NA	NA	$2.61	NA	NA	NA	NA	NA
2-WIRE VOICE UNBUNDLED PBX KENTUCKY PREMIUM CALLING PORT	UEPXH	NA	NA	NA	$2.61	NA	NA	NA	NA	NA
2-WIRE VOICE UNBUNDLED 2-WAY KENTUCKY AREA CALLING PORT WITHOUT LUD	UEPXJ	NA	NA	NA	$2.61	NA	NA	NA	NA	NA
2-WIRE VOICE UNBUNDLED 2-WAY PBX LOUISIANA LOCAL OPTIONAL CALLING PORT	UEPXK	NA	NA	NA	NA	$2.20	NA	NA	NA	NA
2-WIRE VOICE UNBUNDLED 2-WAY PBX HOTEL/HOSPITAL ECONOMY ADMINISTRATIVE CALLING PORT	UEPXL	$2.07	$2.00	$1.85	$2.61	$2.20	$2.11	$2.00	$2.35	$1.90
2-WIRE VOICE UNBUNDLED 2-WAY PBX HOTEL/HOSPITAL ECONOMY ROOM CALLING PORT	URPXM	$2.07	$2.00	$1.85	$2.61	$2.20	$2.11	$2.00	$2.35	$1.90
2-WIRE VOICE UNBUNDLED 1-WAY OUTGOING PBX HOTEL/HOSPITAL ECONOMY ADMINIATRATIVE CALLING PORTTENNESSEE CALLING PORT	UEPXN	NA	NA	NA	NA	NA	NA	NA	NA	$1.90
2-WIRE VOICE UNBUNDLED 1-WAY OUTGOING PBX HOTEL/HOSPITAL DIACOUNT ROOM CALLING PORT	UEPXO	$2.07	$2.00	$1.85	$2.61	$2.20	$2.11	$2.00	$2.35	$1.90
2-WIRE VOICE UNBUNDLED 1-WAY OUTGOING PBX LOUISIANA LOCAL DISCOUNT CALLING PORT	UEPXP	NA	NA	NA	NA	$2.20	NA	NA	NA	NA
2-WIRE VOICE UNBUNDLED 2-WAY PBX MISSISSIPPI LOCAL ECONOMY CALLING PORT	UEPXQ	NA	NA	NA	NA	NA	$2.11	NA	NA	NA
2-WIRE VOICE UNBUNDLED 2-WAY PBX MISSISSIPPI LOCAL OPTIONAL CALLING PORT	UEPXR	NA	NA	NA	NA	NA	$2.11	NA	NA	NA
2-WIRE VOICE UNBUNDLED 1-WAY OUTGOING PBXMEASURED PORT	UEPXS	$2.07	$2.00	$1.85	$2.61	$2.20	$2.11	$2.00	$2.35	$1.90
2-WIRE VOICE UNBUNDLED 2-WAY PBX SOUTH CAROLINA AREA PLUS CALLING PORT	UEPXT	NA	NA	NA	NA	NA	NA	NA	$2.35	NA
2-WIRE VOICE UNBUNDLED PBX COLLIERVILLE & MEMPHIS CALLING PORT	UEPXU	NA	NA	NA	NA	NA	NA	NA	NA	$1.90
2-WIRE VOICE UNBUNDLED 2-WAY PBX TENNESSEE REGIONSERV CALLING PORT	UEPXV	NA	NA	NA	NA	NA	NA	NA	NA	$1.90
UNBUNDLED LOOP BILLING USOC (REQUIRES ONE PER PORT)	UEPLX									
LOCAL NUMBER PORTABILITY (REQUIRES ONE PER PORT)	LNPCP									

DESCRIPTION	USOC	AL	FL	GA	KY	LA	MS	NC	SC	TN
NRC - 1st	UEPPC	$21.93	$38.00	$17.16	$36.47	$16.43	$22.98	$24.04	$24.36	NA
2 WIRE VOICE UNBUNDLED COMBINATION 2-WAY PBX TRUNK - Residence	UEPRD	$21.93	$38.00	$17.16	$36.47	$16.43	$22.98	$21.60	$24.36	NA
LINE SIDE UNBUNDLED COMBINATION 2-WAY PBX TRUNK - BUSINESS	UEPPC	$21.93	$38.00	$17.16	$36.47	$16.43	$22.98	$24.04	$24.36	NA
LINE SIDE UNBUNDLED OUTWARD PBX TRUNK - BUSINESS	UEPPO	$21.93	$38.00	$17.16	$36.47	$16.43	$22.98	$24.04	$24.36	NA
LINE SIDE UNBUNDLED INCOMING PBX TRUNK - BUSINESS	UEPP1	$21.93	$38.00	$17.16	$36.47	$16.43	$22.98	$24.04	$24.36	NA
LONG DISTANCE TERMINAL PBX TRUNK-BUSINESS	UEPLD	$21.93	$38.00	$17.16	$36.47	$16.43	$22.98	$24.04	$24.36	NA
TN 2-WAY CALLING PLAN PBX TRUNK - BUSINESS	UEPT2	$21.93	$38.00	$17.16	$36.47	$16.43	$22.98	$24.04	$24.36	NA
TN OUTWARD CALLING PLAN PBX TRUNK - BUSINESS	UEPTO	$21.93	$38.00	$17.16	$36.47	$16.43	$22.98	$24.04	$24.36	NA
2-WIRE VOICE UNBUNDLED 2-WAY COMBINATION PBX ALABAMA CALLING PORT	UEPA2	$21.93	NA	NA	NA	NA	NA	NA	NA	NA
2-WIRE VOICE UNBUNDLED 2-WAY COMBINATION PBX LOUISIANA CALLING PORT	UEPL2	NA	NA	NA	NA	$16.43	NA	NA	NA	NA
2-WIRE VOICE UNBUNDLED PBX LD TERMINAL PORTS	UEPLD	$21.93	$38.00	$17.16	$36.47	$16.43	$22.98	$24.04	$24.36	NA
2-WIRE VOICE UNBUNDLED 2-WAY COMBINATION PBX TENNESSEE	UEPT2	NA	NA	NA	NA	NA	NA	NA	NA	NA
2-WIRE VOICE UNBUNDLED 1-WAY OUTGOING PBX TENNESSEE CALLING PORT	UEPTO	NA	NA	NA	NA	NA	NA	NA	NA	NA
2-WIRE VOICE UNBUNDLED 2-WAY COMBINATION PBX USAGE PORT	UEPXA	$21.93	$38.00	$17.16	$36.47	$16.43	$22.98	$24.04	$24.36	NA
2-WIRE VOICE UNBUNDLED PBX TOLL TERMINAL HOTEL PORTS	UEPXB	$21.93	$38.00	$17.16	$36.47	$16.43	$22.98	$24.04	$24.36	NA
2-WIRE VOICE UNBUNDLED PBX LD DDD TERMINALS PORT	UEPXC	$21.93	$38.00	$17.16	$36.47	$16.43	$22.98	$24.04	$24.36	NA
2-WIRE VOICE UNBUNDLED PBX LD TERMINAL SWITCHBOARD PORT	UEPXD	$21.93	$38.00	$17.16	$36.47	$16.43	$22.98	$24.04	$24.36	NA
2-WIRE VOICE UNBUNDLED PBX LD TERMINAL SWITCHBOARD IDD CAPABLE PORT	UEPXE	$21.93	$38.00	$17.16	$36.47	$16.43	$22.98	$24.04	$24.36	NA
2-WIRE VOICE UNBUNDLED 2-WAY PBX KENTUCKY ROOM AREA CALLING PORT WITHOUT LUD	UEPXF	NA	NA	NA	$36.47	NA	NA	NA	NA	NA
2-WIRE VOICE UNBUNDLED PBX KENTUCKY LUD AREA CALLING PORT	UEPXG	NA	NA	NA	$36.47	NA	NA	NA	NA	NA
2-WIRE VOICE UNBUNDLED PBX KENTUCKY PREMIUM CALLING PORT	UEPXH	NA	NA	NA	$36.47	NA	NA	NA	NA	NA
2-WIRE VOICE UNBUNDLED 2-WAY KENTUCKY AREA CALLING PORT WITHOUT LUD	UEPXJ	NA	NA	NA	$36.47	NA	NA	NA	NA	NA
2-WIRE VOICE UNBUNDLED 2-WAY PBX LOUISIANA LOCAL OPTIONAL CALLING PORT	UEPXK	NA	NA	NA	NA	$16.43	NA	NA	NA	NA
2-WIRE VOICE UNBUNDLED 2-WAY PBX HOTEL/HOSPITAL ECONOMY ADMINISTRATIVE CALLING PORT	UEPXL	$21.93	$38.00	$17.16	$36.47	$16.43	$22.98	$24.04	$24.36	NA
2-WIRE VOICE UNBUNDLED 2-WAY PBX HOTEL/HOSPITAL ECONOMY ROOM CALLING PORT	URPXM	$21.93	$38.00	$17.16	$36.47	$16.43	$22.98	$24.04	$24.36	NA
2-WIRE VOICE UNBUNDLED 1-WAY OUTGOING PBX HOTEL/HOSPITAL ECONOMY ADMINIATRATIVE CALLING PORTTENNESSEE CALLING PORT	UEPXN	NA	NA	NA	NA	NA	NA	NA	NA	NA
2-WIRE VOICE UNBUNDLED 1-WAY OUTGOING PBX HOTEL/HOSPITAL DIACOUNT ROOM CALLING PORT	UEPXO	$21.93	$38.00	$17.16	$36.47	$16.43	$22.98	$24.04	$24.36	NA
2-WIRE VOICE UNBUNDLED 1-WAY OUTGOING PBX LOUISIANA LOCAL DISCOUNT CALLING PORT	UEPXP	NA	NA	NA	NA	$16.43	NA	NA	NA	NA
2-WIRE VOICE UNBUNDLED 2-WAY PBX MISSISSIPPI LOCAL ECONOMY CALLING PORT	UEPXQ	NA	NA	NA	NA	NA	$22.98	NA	NA	NA
2-WIRE VOICE UNBUNDLED 2-WAY PBX MISSISSIPPI LOCAL OPTIONAL CALLING PORT	UEPXR	NA	NA	NA	NA	NA	$22.98	NA	NA	NA
2-WIRE VOICE UNBUNDLED 1-WAY OUTGOING PBXMEASURED PORT	UEPXS	$21.93	$38.00	$17.16	$36.47	$16.43	$22.98	$24.04	$24.36	NA
2-WIRE VOICE UNBUNDLED 2-WAY PBX SOUTH CAROLINA AREA PLUS CALLING PORT	UEPXT	NA	NA	NA	NA	NA	NA	NA	$24.36	NA
2-WIRE VOICE UNBUNDLED PBX COLLIERVILLE & MEMPHIS CALLING PORT	UEPXU	NA	NA	NA	NA	NA	NA	NA	NA	NA
2-WIRE VOICE UNBUNDLED 2-WAY PBX TENNESSEE REGIONSERV CALLING PORT	UEPXV	NA	NA	NA	NA	NA	NA	NA	NA	NA

DESCRIPTION	USOC	AL	FL	GA	KY	LA	MS	NC	SC	TN
NRC - Add'l										
2 WIRE VOICE UNBUNDLED COMBINATION 2-WAY PBX TRUNK - Residence	UEPRD	$21.93	$15.00	$17.16	$36.47	$16.43	$22.98	$21.60	$24.36	NA
LINE SIDE UNBUNDLED COMBINATION 2-WAY PBX TRUNK - BUSINESS	UEPPC	$21.93	$15.00	$17.16	$36.47	$16.43	$22.98	$9.05	$24.36	NA
LINE SIDE UNBUNDLED OUTWARD PBX TRUNK - BUSINESS	UEPPO	$21.93	$15.00	$17.16	$36.47	$16.43	$22.98	$9.05	$24.36	NA
LINE SIDE UNBUNDLED INCOMING PBX TRUNK - BUSINESS	UEPP1	$21.93	$15.00	$17.16	$36.47	$16.43	$22.98	$9.05	$24.36	NA
LONG DISTANCE TERMINAL PBX TRUNK-BUSINESS	UEPLD	$21.93	$15.00	$17.16	$36.47	$16.43	$22.98	$9.05	$24.36	NA
TN 2-WAY CALLING PLAN PBX TRUNK - BUSINESS	UEPT2	$21.93	$15.00	$17.16	$36.47	$16.43	$22.98	$9.05	$24.36	NA
TN OUTWARD CALLING PLAN PBX TRUNK - BUSINESS	UEPTO	$21.93	$15.00	$17.16	$36.47	$16.43	$22.98	$9.05	$24.36	NA
2-WIRE VOICE UNBUNDLED 2-WAY COMBINATION PBX ALABAMA CALLING PORT	UEPA2	$21.93	NA	NA	NA	NA	NA	NA	NA	NA
2-WIRE VOICE UNBUNDLED 2-WAY COMBINATION PBX LOUISIANA CALLING PORT	UEPL2	NA	NA	NA	NA	$16.43	NA	NA	NA	NA
2-WIRE VOICE UNBUNDLED PBX LD TERMINAL PORTS	UEPLD	$21.93	$15.00	$17.16	$36.47	$16.43	$22.98	$9.05	$24.36	NA
2-WIRE VOICE UNBUNDLED 2-WAY COMBINATION PBX TENNESSEE CALLING PORT	UEPT2	NA	NA	NA	NA	NA	NA	NA	NA	NA
2-WIRE VOICE UNBUNDLED 1-WAY OUTGOING PBX TENNESSEE CALLING PORT	UEPTO	NA	NA	NA	NA	NA	NA	NA	NA	NA
2-WIRE VOICE UNBUNDLED 2-WAY COMBINATION PBX USAGE PORT	UEPXA	$21.93	$15.00	$17.16	$36.47	$16.43	$22.98	$9.05	$24.36	NA
2-WIRE VOICE UNBUNDLED PBX TOLL TERMINAL HOTEL PORTS	UEPXB	$21.93	$15.00	$17.16	$36.47	$16.43	$22.98	$9.05	$24.36	NA
2-WIRE VOICE UNBUNDLED PBX LD DDD TERMINALS PORT	UEPXC	$21.93	$15.00	$17.16	$36.47	$16.43	$22.98	$9.05	$24.36	NA
2-WIRE VOICE UNBUNDLED PBX LD TERMINAL SWITCHBOARD PORT	UEPXD	$21.93	$15.00	$17.16	$36.47	$16.43	$22.98	$9.05	$24.36	NA
2-WIRE VOICE UNBUNDLED PBX LD TERMINAL SWITCHBOARD IDD CAPABLE PORT	UEPXE	$21.93	$15.00	$17.16	$36.47	$16.43	$22.98	$9.05	$24.36	NA
2-WIRE VOICE UNBUNDLED 2-WAY PBX KENTUCKY ROOM AREA CALLING PORT WITHOUT LUD	UEPXF	NA	NA	NA	$36.47	NA	NA	NA	NA	NA
2-WIRE VOICE UNBUNDLED PBX KENTUCKY LUD AREA CALLING PORT	UEPXG	NA	NA	NA	$37.47	NA	NA	NA	NA	NA
2-WIRE VOICE UNBUNDLED PBX KENTUCKY PREMIUM CALLING PORT	UEPXH	NA	NA	NA	$38.47	NA	NA	NA	NA	NA
2-WIRE VOICE UNBUNDLED 2-WAY KENTUCKY AREA CALLING PORT WITHOUT LUD	UEPXJ	NA	NA	NA	$39.47	NA	NA	NA	NA	NA
2-WIRE VOICE UNBUNDLED 2-WAY PBX LOUISIANA LOCAL OPTIONAL CALLING PORT	UEPXK	NA	NA	NA	NA	$16.43	NA	NA	NA	NA
2-WIRE VOICE UNBUNDLED 2-WAY PBX HOTEL/HOSPITAL ECONOMY ADMINISTRATIVE CALLING PORT	UEPXL	$21.93	$15.00	$17.16	$36.47	$16.43	$22.98	$9.05	$24.36	NA
2-WIRE VOICE UNBUNDLED 2-WAY PBX HOTEL/HOSPITAL ECONOMY ROOM CALLING PORT	URPXM	$21.93	$15.00	$17.16	$36.47	$16.43	$22.98	$9.05	$24.36	NA
2-WIRE VOICE UNBUNDLED 1-WAY OUTGOING PBX HOTEL/HOSPITAL ECONOMY ADMINIATRATIVE CALLING PORTTENNESSEE CALLING PORT	UEPXN	NA	NA	NA	NA	NA	NA	NA	NA	NA
2-WIRE VOICE UNBUNDLED 1-WAY OUTGOING PBX HOTEL/HOSPITAL DIACOUNT ROOM CALLING PORT	UEPXO	$21.93	$15.00	$17.16	$36.47	$16.43	$22.98	$9.05	$24.36	NA
2-WIRE VOICE UNBUNDLED 1-WAY OUTGOING PBX LOUISIANA LOCAL DISCOUNT CALLING PORT	UEPXP	NA	NA	NA	NA	$16.43	NA	NA	NA	NA
2-WIRE VOICE UNBUNDLED 2-WAY PBX MISSISSIPPI LOCAL ECONOMY CALLING PORT	UEPXQ	NA	NA	NA	NA	NA	$22.98	NA	NA	NA
2-WIRE VOICE UNBUNDLED 2-WAY PBX MISSISSIPPI LOCAL OPTIONAL CALLING PORT	UEPXR	NA	NA	NA	NA	NA	$22.98	NA	NA	NA
2-WIRE VOICE UNBUNDLED 1-WAY OUTGOING PBXMEASURED PORT	UEPXS	$21.93	$15.00	$17.16	$36.47	$16.43	$22.98	$9.05	$24.36	NA
2-WIRE VOICE UNBUNDLED 2-WAY PBX SOUTH CAROLINA AREA PLUS CALLING PORT	UEPXT	NA	NA	NA	NA	NA	NA	NA	$24.36	NA
2-WIRE VOICE UNBUNDLED PBX COLLIERVILLE & MEMPHIS CALLING PORT	UEPXU	NA	NA	NA	NA	NA	NA	NA	NA	NA
2-WIRE VOICE UNBUNDLED 2-WAY PBX TENNESSEE REGIONSERV CALLING PORT	UEPXV	NA	NA	NA	NA	NA	NA	NA	NA	NA

DESCRIPTION	USOC	AL	FL	GA	KY	LA	MS	NC	SC	TN
NRC - Disconnect Charge - 1st										
2 WIRE VOICE UNBUNDLED COMBINATION 2-WAY PBX TRUNK - Residence		$6.21	NA	NA	NA	$3.77	$6.56	NA	NA	NA
LINE SIDE UNBUNDLED COMBINATION 2-WAY PBX TRUNK - BUSINESS		$6.21	NA	NA	NA	$3.77	$6.56	NA	NA	NA
LINE SIDE UNBUNDLED OUTWARD PBX TRUNK - BUSINESS		$6.21	NA	NA	NA	$3.77	$6.56	NA	NA	NA
LINE SIDE UNBUNDLED INCOMING PBX TRUNK - BUSINESS		$6.21	NA	NA	NA	$3.77	$6.56	NA	NA	NA
LONG DISTANCE TERMINAL PBX TRUNK-BUSINESS		$6.21	NA	NA	NA	$3.77	$6.56	NA	NA	NA
TN 2-WAY CALLING PLAN PBX TRUNK - BUSINESS		$6.21	NA	NA	NA	$3.77	$6.56	NA	NA	NA
TN OUTWARD CALLING PLAN PBX TRUNK - BUSINESS		$6.21	NA	NA	NA	$3.77	$6.56	NA	NA	NA
2-WIRE VOICE UNBUNDLED 2-WAY COMBINATION PBX ALABAMA CALLING PORT		$6.21	NA	NA	NA	NA	NA	NA	NA	NA
2-WIRE VOICE UNBUNDLED 2-WAY COMBINATION PBX LOUISIANA CALLING PORT		NA	NA	NA	NA	$3.77	NA	NA	NA	NA
2-WIRE VOICE UNBUNDLED PBX LD TERMINAL PORTS		$6.21	NA	NA	NA	$3.77	$6.56	NA	NA	NA
2-WIRE VOICE UNBUNDLED 2-WAY COMBINATION PBX TENNESSEE CALLING PORT		NA	NA	NA	NA	NA	NA	NA	NA	NA
2-WIRE VOICE UNBUNDLED 1-WAY OUTGOING PBX TENNESSEE CALLING PORT		NA	NA	NA	NA	NA	NA	NA	NA	NA
2-WIRE VOICE UNBUNDLED 2-WAY COMBINATION PBX USAGE PORT		$6.21	NA	NA	NA	$3.77	$6.56	NA	NA	NA
2-WIRE VOICE UNBUNDLED PBX TOLL TERMINAL HOTEL PORTS		$6.21	NA	NA	NA	$3.77	$6.56	NA	NA	NA
2-WIRE VOICE UNBUNDLED PBX LD DDD TERMINALS PORT		$6.21	NA	NA	NA	$3.77	$6.56	NA	NA	NA
2-WIRE VOICE UNBUNDLED PBX LD TERMINAL SWITCHBOARD PORT		$6.21	NA	NA	NA	$3.77	$6.56	NA	NA	NA
2-WIRE VOICE UNBUNDLED PBX LD TERMINAL SWITCHBOARD IDD CAPABLE PORT		$6.21	NA	NA	NA	$3.77	$6.56	NA	NA	NA
2-WIRE VOICE UNBUNDLED 2-WAY PBX KENTUCKY ROOM AREA CALLING PORT WITHOUT LUD		NA	NA	NA	NA	NA	NA	NA	NA	NA
2-WIRE VOICE UNBUNDLED PBX KENTUCKY LUD AREA CALLING PORT		NA	NA	NA	NA	NA	NA	NA	NA	NA
2-WIRE VOICE UNBUNDLED PBX KENTUCKY PREMIUM CALLING PORT		NA	NA	NA	NA	NA	NA	NA	NA	NA
2-WIRE VOICE UNBUNDLED 2-WAY KENTUCKY AREA CALLING PORT WITHOUT LUD		NA	NA	NA	NA	NA	NA	NA	NA	NA
2-WIRE VOICE UNBUNDLED 2-WAY PBX LOUISIANA LOCAL OPTIONAL CALLING PORT		NA	NA	NA	NA	$3.77	NA	NA	NA	NA
2-WIRE VOICE UNBUNDLED 2-WAY PBX HOTEL/HOSPITAL ECONOMY ADMINISTRATIVE CALLING PORT		$6.21	NA	NA	NA	$3.77	$6.56	NA	NA	NA
2-WIRE VOICE UNBUNDLED 2-WAY PBX HOTEL/HOSPITAL ECONOMY ROOM CALLING PORT		$6.21	NA	NA	NA	$3.77	$6.56	NA	NA	NA
2-WIRE VOICE UNBUNDLED 1-WAY OUTGOING PBX HOTEL/HOSPITAL ECONOMY ADMINIATRATIVE CALLING PORTTENNESSEE CALLING PORT		NA	NA	NA	NA	NA	NA	NA	NA	NA
2-WIRE VOICE UNBUNDLED 1-WAY OUTGOING PBX HOTEL/HOSPITAL DIACOUNT ROOM CALLING PORT		$6.21	NA	NA	NA	$3.77	$6.56	NA	NA	NA
2-WIRE VOICE UNBUNDLED 1-WAY OUTGOING PBX LOUISIANA LOCAL DISCOUNT CALLING PORT		$6.21	NA	NA	NA	$3.77	$6.56	NA	NA	NA
2-WIRE VOICE UNBUNDLED 2-WAY PBX MISSISSIPPI LOCAL ECONOMY CALLING PORT		NA	NA	NA	NA	NA	$6.56	NA	NA	NA
2-WIRE VOICE UNBUNDLED 2-WAY PBX MISSISSIPPI LOCAL OPTIONAL CALLING PORT		NA	NA	NA	NA	NA	$6.56	NA	NA	NA
2-WIRE VOICE UNBUNDLED 1-WAY OUTGOING PBXMEASURED PORT		$6.21	NA	NA	NA	$3.77	$6.56	NA	NA	NA
2-WIRE VOICE UNBUNDLED 2-WAY PBX SOUTH CAROLINA AREA PLUS CALLING PORT		NA	NA	NA	NA	NA	NA	NA	NA	NA
2-WIRE VOICE UNBUNDLED PBX COLLIERVILLE & MEMPHIS CALLING PORT		NA	NA	NA	NA	NA	NA	NA	NA	NA
2-WIRE VOICE UNBUNDLED 2-WAY PBX TENNESSEE REGIONSERV CALLING PORT		NA	NA	NA	NA	NA	NA	NA	NA	NA

DESCRIPTION	USOC	AL	FL	GA	KY	LA	MS	NC	SC	TN
NRC - Disconnect Charge - Add'l										
2 WIRE VOICE UNBUNDLED COMBINATION 2-WAY PBX TRUNK - Residence		$6.21	NA	NA	NA	$3.77	$6.56	NA	NA	NA
LINE SIDE UNBUNDLED COMBINATION 2-WAY PBX TRUNK - BUSINESS		$6.21	NA	NA	NA	$3.77	$6.56	NA	NA	NA
LINE SIDE UNBUNDLED OUTWARD PBX TRUNK - BUSINESS		$6.21	NA	NA	NA	$3.77	$6.56	NA	NA	NA
LINE SIDE UNBUNDLED INCOMING PBX TRUNK - BUSINESS		$6.21	NA	NA	NA	$3.77	$6.56	NA	NA	NA
LONG DISTANCE TERMINAL PBX TRUNK-BUSINESS		$6.21	NA	NA	NA	$3.77	$6.56	NA	NA	NA
TN 2-WAY CALLING PLAN PBX TRUNK - BUSINESS		$6.21	NA	NA	NA	$3.77	$6.56	NA	NA	NA
TN OUTWARD CALLING PLAN PBX TRUNK - BUSINESS		$6.21	NA	NA	NA	$3.77	$6.56	NA	NA	NA
2-WIRE VOICE UNBUNDLED 2-WAY COMBINATION PBX ALABAMA CALLING PORT		$6.21	NA	NA	NA	NA	NA	NA	NA	NA
2-WIRE VOICE UNBUNDLED 2-WAY COMBINATION PBX LOUISIANA CALLING PORT		NA	NA	NA	NA	$3.77	NA	NA	NA	NA
2-WIRE VOICE UNBUNDLED PBX LD TERMINAL PORTS		$6.21	NA	NA	NA	$3.77	$6.56	NA	NA	NA
2-WIRE VOICE UNBUNDLED 2-WAY COMBINATION PBX TENNESSEE CALLING PORT		NA	NA	NA	NA	NA	NA	NA	NA	NA
2-WIRE VOICE UNBUNDLED 1-WAY OUTGOING PBX TENNESSEE CALLING PORT		NA	NA	NA	NA	NA	NA	NA	NA	NA
2-WIRE VOICE UNBUNDLED 2-WAY COMBINATION PBX USAGE PORT		$6.21	NA	NA	NA	$3.77	$6.56	NA	NA	NA
2-WIRE VOICE UNBUNDLED PBX TOLL TERMINAL HOTEL PORTS		$6.21	NA	NA	NA	$3.77	$6.56	NA	NA	NA
2-WIRE VOICE UNBUNDLED PBX LD DDD TERMINALS PORT		$6.21	NA	NA	NA	$3.77	$6.56	NA	NA	NA
2-WIRE VOICE UNBUNDLED PBX LD TERMINAL SWITCHBOARD PORT		$6.21	NA	NA	NA	$3.77	$6.56	NA	NA	NA
2-WIRE VOICE UNBUNDLED PBX LD TERMINAL SWITCHBOARD IDD CAPABLE PORT		$6.21	NA	NA	NA	$3.77	$6.56	NA	NA	NA
2-WIRE VOICE UNBUNDLED 2-WAY PBX KENTUCKY ROOM AREA CALLING PORT WITHOUT LUD		NA	NA	NA	NA	NA	NA	NA	NA	NA
2-WIRE VOICE UNBUNDLED PBX KENTUCKY LUD AREA CALLING PORT		NA	NA	NA	NA	NA	NA	NA	NA	NA
2-WIRE VOICE UNBUNDLED PBX KENTUCKY PREMIUM CALLING PORT		NA	NA	NA	NA	NA	NA	NA	NA	NA
2-WIRE VOICE UNBUNDLED 2-WAY KENTUCKY AREA CALLING PORT WITHOUT LUD		NA	NA	NA	NA	NA	NA	NA	NA	NA
2-WIRE VOICE UNBUNDLED 2-WAY PBX LOUISIANA LOCAL OPTIONAL CALLING PORT		NA	NA	NA	NA	$3.77	NA	NA	NA	NA
2-WIRE VOICE UNBUNDLED 2-WAY PBX HOTEL/HOSPITAL ECONOMY ADMINISTRATIVE CALLING PORT		$6.21	NA	NA	NA	$3.77	$6.56	NA	NA	NA
2-WIRE VOICE UNBUNDLED 2-WAY PBX HOTEL/HOSPITAL ECONOMY ROOM CALLING PORT		$6.21	NA	NA	NA	$3.77	$6.56	NA	NA	NA
2-WIRE VOICE UNBUNDLED 1-WAY OUTGOING PBX HOTEL/HOSPITAL ECONOMY ADMINIATRATIVE CALLING PORTTENNESSEE CALLING PORT		NA	NA	NA	NA	NA	NA	NA	NA	NA
2-WIRE VOICE UNBUNDLED 1-WAY OUTGOING PBX HOTEL/HOSPITAL DIACOUNT ROOM CALLING PORT		$6.21	NA	NA	NA	$3.77	$6.56	NA	NA	NA
2-WIRE VOICE UNBUNDLED 1-WAY OUTGOING PBX LOUISIANA LOCAL DISCOUNT CALLING PORT		$6.21	NA	NA	NA	$3.77	$6.56	NA	NA	NA
2-WIRE VOICE UNBUNDLED 2-WAY PBX MISSISSIPPI LOCAL ECONOMY CALLING PORT		NA	NA	NA	NA	NA	$6.56	NA	NA	NA
2-WIRE VOICE UNBUNDLED 2-WAY PBX MISSISSIPPI LOCAL OPTIONAL CALLING PORT		NA	NA	NA	NA	NA	$6.56	NA	NA	NA
2-WIRE VOICE UNBUNDLED 1-WAY OUTGOING PBXMEASURED PORT		$6.21	NA	NA	NA	$3.77	$6.56	NA	NA	NA
2-WIRE VOICE UNBUNDLED 2-WAY PBX SOUTH CAROLINA AREA PLUS CALLING PORT		NA	NA	NA	NA	NA	NA	NA	NA	NA
2-WIRE VOICE UNBUNDLED PBX COLLIERVILLE & MEMPHIS CALLING PORT		NA	NA	NA	NA	NA	NA	NA	NA	NA
2-WIRE VOICE UNBUNDLED 2-WAY PBX TENNESSEE REGIONSERV CALLING PORT		NA	NA	NA	NA	NA	NA	NA	NA	NA

DESCRIPTION	USOC	AL	FL	GA	KY	LA	MS	NC	SC	TN
NRC - Incremental Charge - Manual Service Order - 1st	SOMAN	$27.37	NA	$18.94	NA	$18.14	$25.52	$48.54	$41.86	NA
NRC - Incremental Charge - Manual Service Order - Add'l	SOMAN	$12.97	NA	$8.42	NA	$8.06	$11.34	$34.36	$14.46	NA
NRC - Incremental Charge - Manual Service Order - Disconnect - 1st	SOMAN	$17.77	NA	NA	NA	$8.94	$16.06	NA	NA	NA
NRC - Incremental Charge - Manual Service Order - Disconnect - Add'l	SOMAN	$0.48	NA	NA	NA	NA	NA	NA	NA	NA
2-Wire Analog Line Port (PBX) including all available features, per month	UEPPC	NA	NA	NA	NA	NA	NA	NA	$8.67	NA
NRC - 1st	UEPPC	NA	NA	NA	NA	NA	NA	NA	$60.60	NA
NRC - Add'l	UEPPC	NA	NA	NA	NA	NA	NA	NA	$60.60	NA
NRC - Incremental Charge - Manual Service Order - 1st	SOMAN	NA	NA	NA	NA	NA	NA	NA	$41.86	NA
NRC - Incremental Charge - Manual Service Order - Add'l	SOMAN	NA	NA	NA	NA	NA	NA	NA	$14.46	NA
2-Wire Analog Line Port (PBX) including three available features, per month	UEPPC	NA	NA	NA	NA	NA	NA	NA	$5.38	NA
NRC - 1st	UEPPC	NA	NA	NA	NA	NA	NA	NA	$28.89	NA
NRC - Add'l	UEPPC	NA	NA	NA	NA	NA	NA	NA	$28.89	NA
NRC - Incremental Charge - Manual Service Order - 1st	SOMAN	NA	NA	NA	NA	NA	NA	NA	$41.86	NA
NRC - Incremental Charge - Manual Service Order - Add'l	SOMAN	NA	NA	NA	NA	NA	NA	NA	$14.46	NA
2-Wire Analog Hunting, per line per month	HTGUX	See features	NA	NA	$0.29	NA	See features	NA	See features	NA
NRC - 1st	HTGUX	See features	NA	NA	$2.14	NA	See features	NA	See features	NA
NRC - Add'l	HTGUX	See features	NA	NA	$2.14	NA	See features	NA	See features	NA
Coin Port, per month		$2.34	NA	$2.05	$3.04	$2.50	$2.32	NA	$2.77	$1.90
NRC - 1st		$21.93	NA	$17.16	$40.71	$16.43	$22.98	NA	$24.75	BST GSST A4.3.1
NRC - Add'l		$21.93	NA	$17.16	$40.71	$16.43	$22.98	NA	$24.75	BST GSST A4.3.1
NRC - Disconnect Charge - 1st		$5.21	NA	NA	NA	$4.15	$6.56	NA	NA	NA
NRC - Disconnect Charge - Add'l		$5.21	NA	NA	NA	$4.15	$6.56	NA	NA	NA
NRC - Incremental Charge - Manual Service Order - 1st	SOMAN	$25.93	NA	$18.94	NA	$18.14	$25.52	NA	$43.48	NA
NRC - Incremental Charge - Manual Service Order - Add'l	SOMAN	$12.97	NA	$8.42	NA	$8.06	$11.34	NA	$14.57	NA
NRC - Incremental Charge - Manual Service Order - Disconnect - 1st	SOMAN	$16.33	NA	NA	NA	$9.86	$16.06	NA	NA	NA
NRC - Incremental Charge - Manual Service Order - Disconnect - Add'l	SOMAN	$0.48	NA	NA	NA	NA	NA	NA	NA	NA
4- Wire Coin Port, per month		NA	NA	NA	NA	NA	NA	$2.59	NA	NA
NRC - 1st		NA	NA	NA	NA	NA	NA	$21.60	NA	NA
NRC - Add'l		NA	NA	NA	NA	NA	NA	$21.60	NA	NA
NRC - Disconnect Charge - 1st		NA	NA	NA	NA	NA	NA	NA	NA	NA
NRC - Disconnect Charge - Add'l		NA	NA	NA	NA	NA	NA	NA	NA	NA
NRC - Incremental Charge - Manual Service Order - 1st		NA	NA	NA	NA	NA	NA	$48.54	NA	NA
NRC - Incremental Charge - Manual Service Order - Add'l		NA	NA	NA	NA	NA	NA	$34.36	NA	NA
NRC - Incremental Charge - Manual Service Order - Disconnect - 1st		NA	NA	NA	NA	NA	NA	NA	NA	NA
NRC - Incremental Charge - Manual Service Order - Disconnect - Add'l		NA	NA	NA	NA	NA	NA	NA	NA	NA
VERTICAL FEATURES										
Local Switching Features offered with Port, Per month	N/A	NA	No add'l	NA	No add'l	$8.28	NA	NA	See above	NA
Three-Way Calling, per month		$1.12	NA	NA	NA	NA	$1.32	$0.89	$1.10	NA
NRC		$1.03	NA	NA	NA	NA	$1.02	$1.51	$1.51	NA
NRC - Disconnect		$0.55	NA	NA	NA	NA	$0.5466	NA	NA	NA
Customer Changeable Speed Calling, per month		$0.08	NA	NA	NA	NA	$0.0755	$0.17	$0.1247	NA
NRC		$1.03	NA	NA	NA	NA	$1.02	$1.51	$1.51	NA
NRC - Disconnect		$0.55	NA	NA	NA	NA	$0.5466	NA	NA	NA
Call Waiting		$0.03	NA	NA	NA	NA	$0.033	$0.09	$0.0665	NA
NRC		$1.03	NA	NA	NA	NA	$1.02	$1.51	$1.51	NA
NRC - Disconnect		$0.55	NA	NA	NA	NA	$0.5466	NA	NA	NA
Remote Activation of Call Fordwarding, per month		$0.18	NA	NA	NA	NA	$0.4859	$0.85	$0.3743	NA
NRC		$1.03	NA	NA	NA	NA	$1.02	$1.51	$1.51	NA
NRC - Disconnect		$0.55	NA	NA	NA	NA	$0.5466	NA	NA	NA

DESCRIPTION	USOC	AL	FL	GA	KY	LA	MS	NC	SC	TN
Cancel Call Waiting, per month		$0.01	NA	NA	NA	NA	$0.0082	$0.01	$0.0099	NA
NRC		$1.03	NA	NA	NA	NA	$1.02	$1.51	$1.51	NA
NRC - Disconnect		$0.55	NA	NA	NA	NA	$0.5466	NA	NA	NA
Automatic Callback, per month		$0.29	NA	NA	NA	NA	$0.9977	$0.66	$0.8015	NA
NRC		$1.03	NA	NA	NA	NA	$1.02	$1.51	$1.51	NA
NRC - Disconnect		$0.55	NA	NA	NA	NA	$0.5466	NA	NA	NA
Automatic Recall, per month		$0.28	NA	NA	NA	NA	$0.3164	$0.29	$0.3102	NA
NRC		$1.03	NA	NA	NA	NA	$1.02	$1.51	$1.51	NA
NRC - Disconnect		$0.55	NA	NA	NA	NA	$0.5466	NA	NA	NA
Calling Number Delivery, per month		$0.22	NA	NA	NA	NA	$0.1817	$0.33	$0.3272	NA
NRC		$1.03	NA	NA	NA	NA	$1.02	$1.51	$1.51	NA
NRC - Disconnect		$0.55	NA	NA	NA	NA	$0.5466	NA	NA	NA
Calling Number Delivery Blocking, per month		$1.17	NA	NA	NA	NA	$0.9913	$0.02	$0.3684	NA
NRC		$1.03	NA	NA	NA	NA	$1.02	$1.51	$1.51	NA
NRC - Disconnect		$0.55	NA	NA	NA	NA	$0.5466	NA	NA	NA
Customer Originated Trace, per month		$0.14	NA	NA	NA	NA	$0.1918	$0.14	$0.1402	NA
NRC		$1.03	NA	NA	NA	NA	$1.02	$1.51	$1.51	NA
NRC - Disconnect		$0.55	NA	NA	NA	NA	$0.5466	NA	NA	NA
Selective Call Rejection, per month		$0.13	NA	NA	NA	NA	$0.1721	$0.13	$0.1528	NA
NRC		$1.03	NA	NA	NA	NA	$1.02	$1.51	$1.51	NA
NRC - Disconnect		$0.55	NA	NA	NA	NA	$0.5466	NA	NA	NA
Selective Call Forwarding, per month		$0.05	NA	NA	NA	NA	$0.1050	$0.28	$0.1287	NA
NRC		$1.03	NA	NA	NA	NA	$1.02	$1.51	$1.51	NA
NRC - Disconnect		$0.55	NA	NA	NA	NA	$0.5466	NA	NA	NA
Selective Call Acceptance, per month		$0.29	NA	NA	NA	NA	$0.4010	$0.33	$0.3283	NA
NRC		$1.03	NA	NA	NA	NA	$1.02	$1.51	$1.51	NA
NRC - Disconnect		$0.55	NA	NA	NA	NA	$0.5466	NA	NA	NA
Multiline Hunt Service (Rotary)										
Service per line, (in addition to port) , per month		$0.11	NA	NA	NA	NA	$0.1271	$0.14	$0.1301	NA
NRC		$1.03	NA	NA	NA	NA	$1.02	$1.51	$1.51	NA
NRC - Disconnect		$0.55	NA	NA	NA	NA	$0.5466	NA	NA	NA
Call Forwarding Variable, per month		$0.05	NA	NA	NA	NA	$0.0474	$0.10	$0.0768	NA
NRC		$1.03	NA	NA	NA	NA	$1.02	$1.51	$1.51	NA
NRC - Disconnect		$0.55	NA	NA	NA	NA	$0.5466	NA	NA	NA
Call Forwarding Busy Line, per month		$0.03	NA	NA	NA	NA	$0.0279	$0.08	$0.0603	NA
NRC		$1.03	NA	NA	NA	NA	$1.02	$1.51	$1.51	NA
NRC - Disconnect		$0.55	NA	NA	NA	NA	$0.5466	NA	NA	NA
Call Forwarding Don't Answer All Calls, per month		$0.03	NA	NA	NA	NA	$0.0308	$0.09	$0.0655	NA
NRC		$1.03	NA	NA	NA	NA	$1.02	$1.51	$1.51	NA
NRC - Disconnect		$0.55	NA	NA	NA	NA	$0.5466	NA	NA	NA
Remote Call Forwarding, per month		$1.36	NA	NA	NA	NA	$1.47	$0.95	$1.41	NA
NRC		$1.03	NA	NA	NA	NA	$1.02	$1.51	$1.51	NA
NRC - Disconnect		$0.55	NA	NA	NA	NA	$0.5466	NA	NA	NA
Call Transfer, per month		$0.12	NA	NA	NA	NA	$0.1404	$0.14	$0.1392	NA
NRC		$1.03	NA	NA	NA	NA	$1.02	$1.51	$1.51	NA
NRC - Disconnect		$0.55	NA	NA	NA	NA	$0.5466	NA	NA	NA
Call Hold, per month		$0.03	NA	NA	NA	NA	$0.0190	$0.15	$0.0677	NA
NRC		$1.03	NA	NA	NA	NA	$1.02	$1.51	$1.51	NA
NRC – Disconnect		$0.55	NA	NA	NA	NA	$0.5466	NA	NA	NA
Toll Restricted Service, per month		$0.04	NA	NA	NA	NA	$0.0387	$0.10	$0.0743	NA
NRC		$1.03	NA	NA	NA	NA	$1.02	$1.51	$1.51	NA
NRC - Disconnect		$0.55	NA	NA	NA	NA	$0.5466	NA	NA	NA
Message Waiting Indicator – Stutter Dial Tone, per month		$0.03	NA	NA	NA	NA	$0.0356	$0.03	$0.0318	NA
NRC		$1.03	NA	NA	NA	NA	$1.02	$1.51	$1.51	NA
NRC - Disconnect		$0.55	NA	NA	NA	NA	$0.5466	NA	NA	NA
Anonymous Call Rejection, per month		$0.93	NA	NA	NA	NA	$0.9519	$1.29	$1.13	NA

DESCRIPTION	USOC	AL	FL	GA	KY	LA	MS	NC	SC	TN
NRC		$1.03	NA	NA	NA	NA	$1.02	$1.51	$1.51	NA
NRC - Disconnect		$0.55	NA	NA	NA	NA	$0.5466	NA	NA	NA
Shared Call Appearances of a DN, per month		$0.41	NA	NA	NA	NA	$0.5015	$0.29	$0.3513	NA
NRC		$1.03	NA	NA	NA	NA	$1.02	$1.47	$1.47	NA
NRC - Disconnect		$0.55	NA	NA	NA	NA	$0.5466	NA	NA	NA
Multiple Call Appearances, per month		$0.09	NA	NA	NA	NA	$0.0932	$0.07	$0.0891	NA
NRC		$1.03	NA	NA	NA	NA	$1.02	$1.47	$1.47	NA
NRC - Disconnect		$0.55	NA	NA	NA	NA	$0.5466	NA	NA	NA
ISDN Bridged Call Exclusion, per month		$0.00	NA	NA	NA	NA	$0.0013	$0.0011	$0.0013	NA
NRC		$1.03	NA	NA	NA	NA	$1.02	$1.47	$1.47	NA
NRC - Disconnect		$0.55	NA	NA	NA	NA	$0.5466	NA	NA	NA
Call by Call Access, per month		$28.29	NA	NA	NA	NA	$50.89	$19.83	$0.3621	NA
NRC		$28.94	NA	NA	NA	NA	$28.61	$33.33	$33.36	NA
NRC - Disconnect		$5.22	NA	NA	NA	NA	$5.16	NA	NA	NA
Privacy Release, per month		$0.01	NA	NA	NA	NA	$0.0030	$0.0041	$0.0116	NA
NRC		$1.03	NA	NA	NA	NA	$1.02	$1.51	$1.51	NA
NRC - Disconnect		$0.55	NA	NA	NA	NA	$0.5466	NA	NA	NA
Multi Appearance Directory Number Calls, per month		$0.10	NA	NA	NA	NA	$0.1115	$0.13	$0.1048	NA
NRC		$1.03	NA	NA	NA	NA	$1.02	$1.51	$1.51	NA
NRC - Disconnect		$0.55	NA	NA	NA	NA	$0.5466	NA	NA	NA
Make Set Busy, per month		$0.01	NA	NA	NA	NA	$0.0013	$0.0020	$0.0101	NA
NRC		$1.03	NA	NA	NA	NA	$1.02	$1.51	$1.51	NA
NRC - Disconnect		$0.55	NA	NA	NA	NA	$0.5466	NA	NA	NA
Teen Service (Res. Dist. Alerting Service), per month		$0.15	NA	NA	NA	NA	$0.1071	$0.26	$0.2149	NA
NRC		$1.03	NA	NA	NA	NA	$1.02	$1.51	$1.51	NA
NRC - Disconnect		$0.55	NA	NA	NA	NA	$0.5466	NA	NA	NA
Code Restriction and Diversion, per month		$0.04	NA	NA	NA	NA	$0.0464	$0.09	$0.0708	NA
NRC		$1.03	NA	NA	NA	NA	$1.02	$1.51	$1.51	NA
NRC - Disconnect		$0.55	NA	NA	NA	NA	$0.5466	NA	NA	NA
Call Park, per month		$0.04	NA	NA	NA	NA	$0.0443	$0.09	$0.0694	NA
NRC		$1.03	NA	NA	NA	NA	$1.02	$1.51	$1.51	NA
NRC - Disconnect		$0.55	NA	NA	NA	NA	$0.5466	NA	NA	NA
Automatic Line, per month		$0.09	NA	NA	NA	NA	$0.1111	$0.14	$0.1179	NA
NRC		$1.03	NA	NA	NA	NA	$1.02	$1.51	$1.51	NA
NRC - Disconnect		$0.55	NA	NA	NA	NA	$0.5466	NA	NA	NA
2-WIRE ISDN BRI FEATURES										
Shared Primary Number-First Appr On Each Add'l Terminal	DS1FJ	TBD	TBD	TBD	TBD	TBD	TBD	TBD	TBD	TBD
Secondary Only Dn (Shared/Non-Shared) First Appearance	LLDSF	TBD	TBD	TBD	TBD	TBD	TBD	TBD	TBD	TBD
Shared Secondary Only Dn-First Appr On Each Add'l Term	DS1F1	TBD	TBD	TBD	TBD	TBD	TBD	TBD	TBD	TBD
Shared Non-ISDN DN	DOE	TBD	TBD	TBD	TBD	TBD	TBD	TBD	TBD	TBD
Privacy Release	DS1FU	TBD	TBD	TBD	TBD	TBD	TBD	TBD	TBD	TBD
Manual Exclusion	DS1FM	TBD	TBD	TBD	TBD	TBD	TBD	TBD	TBD	TBD
Call Forwarding Variable-Voice Or Voice/Data	LLNCV	TBD	TBD	TBD	TBD	TBD	TBD	TBD	TBD	TBD
Call Forwarding Variable – Data	LLOCD	TBD	TBD	TBD	TBD	TBD	TBD	TBD	TBD	TBD
Call Forwarding Variable – Feature Button – Voice	GJXCF	TBD	TBD	TBD	TBD	TBD	TBD	TBD	TBD	TBD
Call Forwarding Variable – Feature Button – Data	LLPCD	TBD	TBD	TBD	TBD	TBD	TBD	TBD	TBD	TBD
Call Forwarding Busy Line – Voice Or Voice/Data	LLQCV	TBD	TBD	TBD	TBD	TBD	TBD	TBD	TBD	TBD
Call Forwarding Busy Line – Data	LLRCD	TBD	TBD	TBD	TBD	TBD	TBD	TBD	TBD	TBD
Call Frwdng Busy Line–Prgrmmbl–Voice Or Voice/Data	M6AVA	TBD	TBD	TBD	TBD	TBD	TBD	TBD	TBD	TBD
Call Forwarding Busy Line – Programmable - Data	M6ADF	TBD	TBD	TBD	TBD	TBD	TBD	TBD	TBD	TBD
Call Forwarding Don't Answer – Voice Or Voice/Data	LLSCV	TBD	TBD	TBD	TBD	TBD	TBD	TBD	TBD	TBD
Call Forwarding Don't Answer – Data	LLUCD	TBD	TBD	TBD	TBD	TBD	TBD	TBD	TBD	TBD
Call Forwdng Don't Answer–Prgrmmble Voice Or Voice/Data	M6BVA	TBD	TBD	TBD	TBD	TBD	TBD	TBD	TBD	TBD
Call Forwarding Don't Answer – Programmable - Data	M6BDF	TBD	TBD	TBD	TBD	TBD	TBD	TBD	TBD	TBD
Call Frwdng Multiple Simultaneous – Voice Or Voice/Data	M6CV5	TBD	TBD	TBD	TBD	TBD	TBD	TBD	TBD	TBD

DESCRIPTION	USOC	AL	FL	GA	KY	LA	MS	NC	SC	TN
Call Forwarding Multiple Simultaneous – Data	M6CD5	TBD	TBD	TBD	TBD	TBD	TBD	TBD	TBD	TBD
Conference, Drop, Hold And Transfer	DS1FN	TBD	TBD	TBD	TBD	TBD	TBD	TBD	TBD	TBD
Six-Way Conference, Drop, Hold And Transfer	LLY6P	TBD	TBD	TBD	TBD	TBD	TBD	TBD	TBD	TBD
Multi-Line Hunt Group – Voice Or Voice/Data	HTG	TBD	TBD	TBD	TBD	TBD	TBD	TBD	TBD	TBD
Multi-Line Hunt Group – Data	HTGSD	TBD	TBD	TBD	TBD	TBD	TBD	TBD	TBD	TBD
Speed Calling	LLZSU	TBD	TBD	TBD	TBD	TBD	TBD	TBD	TBD	TBD
Visual Message Waiting Indicator	LLAVP	TBD	TBD	TBD	TBD	TBD	TBD	TBD	TBD	TBD
Audible Message Waiting Indicator	MWW	TBD	TBD	TBD	TBD	TBD	TBD	TBD	TBD	TBD
Additional Call Appearance, PDN Or DN	DS1FG	TBD	TBD	TBD	TBD	TBD	TBD	TBD	TBD	TBD
Call Tracing	NST	TBD	TBD	TBD	TBD	TBD	TBD	TBD	TBD	TBD
Call Return	NSS	TBD	TBD	TBD	TBD	TBD	TBD	TBD	TBD	TBD
Preferred Call Forwarding	NCE	TBD	TBD	TBD	TBD	TBD	TBD	TBD	TBD	TBD
Call Block	NSY	TBD	TBD	TBD	TBD	TBD	TBD	TBD	TBD	TBD
Repeat Dialing	NSQ	TBD	TBD	TBD	TBD	TBD	TBD	TBD	TBD	TBD
Per Line Blocking For Agencies/Law Enforcement	NOB	TBD	TBD	TBD	TBD	TBD	TBD	TBD	TBD	TBD
Per Line Blocking For Non-Pub Customers	NOBNN	TBD	TBD	TBD	TBD	TBD	TBD	TBD	TBD	TBD
Per Line Blocking For General Public	NOBPC	TBD	TBD	TBD	TBD	TBD	TBD	TBD	TBD	TBD
Per Line Blocking For Non-Pub, And Non-Listed Customer	NOBPP	TBD	TBD	TBD	TBD	TBD	TBD	TBD	TBD	TBD
Per Line Blocking For Non-Pub Customers	NOBNP	TBD	TBD	TBD	TBD	TBD	TBD	TBD	TBD	TBD
Per Line Blocking For Non-Pub Customers	NOBNR	TBD	TBD	TBD	TBD	TBD	TBD	TBD	TBD	TBD
Call Return Denial Of, Per Activation	BCR	TBD	TBD	TBD	TBD	TBD	TBD	TBD	TBD	TBD
Repeat Dialing, Denial Of, Per Activation	BRD	TBD	TBD	TBD	TBD	TBD	TBD	TBD	TBD	TBD
Automatic Line/Direct Connect	M6GN9	TBD	TBD	TBD	TBD	TBD	TBD	TBD	TBD	TBD
Make Set Busy	M6MPD	TBD	TBD	TBD	TBD	TBD	TBD	TBD	TBD	TBD
Selective Call Acceptance	M6K16	TBD	TBD	TBD	TBD	TBD	TBD	TBD	TBD	TBD
Call Park/Call Retrieve	M6HP6	TBD	TBD	TBD	TBD	TBD	TBD	TBD	TBD	TBD
Call Transfer System Exception	M6QTD	TBD	TBD	TBD	TBD	TBD	TBD	TBD	TBD	TBD
Make Set Busy – Intragroup	M6MGD	TBD	TBD	TBD	TBD	TBD	TBD	TBD	TBD	TBD
All Customized Code Restrictions	CREX+	TBD	TBD	TBD	TBD	TBD	TBD	TBD	TBD	TBD
Additional Listings	CLT	TBD	TBD	TBD	TBD	TBD	TBD	TBD	TBD	TBD
Additional Listing No Rate	FLT	TBD	TBD	TBD	TBD	TBD	TBD	TBD	TBD	TBD
Cross Reference Listing	LLT	TBD	TBD	TBD	TBD	TBD	TBD	TBD	TBD	TBD
Non-Pub Listing No Rate	NP3	TBD	TBD	TBD	TBD	TBD	TBD	TBD	TBD	TBD
Non-List Listing	NLT	TBD	TBD	TBD	TBD	TBD	TBD	TBD	TBD	TBD
Non-List Listing No Rate	NLE	TBD	TBD	TBD	TBD	TBD	TBD	TBD	TBD	TBD
Alternate Call Listing	FNA	TBD	TBD	TBD	TBD	TBD	TBD	TBD	TBD	TBD
Manual Service Order Charge	SOMAN	TBD	TBD	TBD	TBD	TBD	TBD	TBD	TBD	TBD
All Selective Class Of Call Screening	SRG++	TBD	TBD	TBD	TBD	TBD	TBD	TBD	TBD	TBD
ISDN Message Waiting Indication-Lamp, per month		$0.01	NA	NA	NA	NA	$0.0105	$0.0107	$0.0138	NA
NRC		$1.03	NA	NA	NA	NA	$1.02	$1.47	$1.47	NA
NRC - Disconnect		$0.55	NA	NA	NA	NA	$0.5466	NA	NA	NA
ISDN Feature Function Buttons		NA	NA	NA	NA	NA	NA	NA		
NRC		$1.03	NA	NA	NA	NA	$1.02	$1.51	$1.51	NA
NRC - Disconnect		$0.55	NA	NA	NA	NA	$0.5466	NA	NA	NA
Subsequent Ordering Charge – (per order, per line)		NA	NA	NA	NA	NA	NA	NA		
NRC - Electronic - 1st		$2.88	NA	NA	NA	NA	$2.84	$5.42	$1.36	NA
NRC - Electronic - Add'l		$0.96	NA	NA	NA	NA	$0.95	$0.95	$0.71	NA
NRC - Manual - 1st		$4.80	NA	NA	NA	NA	$4.73	$1.89	$7.35	NA
NRC - Manual - Add'l		$0.96	NA	NA	NA	NA	$0.95	NA	$0.95	NA
NRC - Disconnect		$2.88	NA	NA	NA	NA	$2.84	NA	NA	NA
End Office Switching (Port Usage)										
End Office Switching Function, per mou	N/A	$0.0018	$0.0175	$0.0016333	$0.002562	$0.0021	$0.0023771	$0.0017000	$0.0019295	$0.0019
End Office Switching Function, add'l mou (5)	N/A	NA	$0.005	NA	NA	NA	NA	NA	NA	NA
End Office Interoffice Trunk Port—Shared, per mou	N/A	$0.0002	NA	$0.0001564	NA	$0.0002	$0.0001927	NA	$0.0002581	NA

DESCRIPTION	USOC	AL	FL	GA	KY	LA	MS	NC	SC	TN
Tandem Switching (Port Usage) (Local or Access Tandem)										
Tandem Switching Function per mou	N/A	$0.00063	$0.00029	$0.0006757	$0.001096	$0.0008	$0.0007834	$0.0009	$0.0006843	$0.000676
Tandem Interoffice Trunk Port - Shared per mou			NA	$0.0002126	NA	$0.0003	$0.0002834	NA	$0.0004034	NA
NOTES:										
1 Port rate includes all available features.										
2 Transmission/usage charges associated with POTS circuit switched usage will also apply to circuit switched voice and/or circuit switched data transmission by B-Channels associated with 2-wire ISDN ports.										
3 Access to B Channel or D Channel Packet capabilities will be avail- able only through BFR/New Business Request Process. Rates for the packet capabilities will be determined via the Bona Fide Request/New Business Request Process.										
4 This rate element is for those states which have a specific rate for User Profile per B Channel.										
5 This rate element is for use in those states with a different rate for additional										

DESCRIPTION	USOC	AL	FL	GA	KY	LA	MS	NC	SC	TN
INTEROFFICE TRANSPORT										
Common (Shared) Transport										
Common (Shared) Transport per mile per mou	N/A	$0.00001	$0.000012	$0.000008	$0.0000049	$0.0000083	$0.0000091	$0.00001	$0.0000121	$0.00004
Common (Shared) Transport Facilities Termination per mou	N/A	$0.00045	$0.0005	$0.0004152	$0.000426	$0.00047	$0.0004281	$0.00034	$0.0004672	$0.00036
Interoffice Channel - Dedicated Transport - VG										
Interoffice Channel - Dedicated Transport - 2-Wire VG - per mile	1L5XX	$0.03390	NA	$0.0222	$0.03	$0.0384	$0.0323	$0.0282	$0.0373	$0.0173
Interoffice Channel - Dedicated Transport - 2-Wire VG - facility termination per month	U1TV2	$18.49	NA	$17.07	$27.66	$19.10	$21.33	$18.00	$21.42	$18.33
NRC - 1st	U1TV2	$144.27	NA	$79.61	$142.31	$104.23	$144.77	$137.48	$136.44	$83.35
NRC - Add'l	U1TV2	$54.15	NA	$36.08	$56.21	$39.91	$56.06	$52.58	$51.37	$20.88
NRC - Incremental Charge - Manual Service Order - 1st	SOMAC	$40.34	NA	$18.94	$37.21	$26.20	$36.86	$38.07	$39.63	$30.15
NRC - Incremental Charge - Manual Service Order - Add'l	SOMAC	$40.54	NA	$18.94	$37.21	$26.20	$36.86	$38.07	$39.63	$31.63
Interoffice Channel - Dedicated Transport - DS0 - 56/64 KBPS										
Interoffice Channel - Dedicated Transport - DS0 - per mile per month	1L5XX	$0.0339	$0.0252	$0.0222	$0.03	$0.0384	$0.0323	$0.0282	$0.0373	$0.17
Interoffice Channel - Dedicated Transport - DS0 - facility termination per month	U1TD6	$17.81	$21.33	$16.45	$26.95	$18.37	$20.64	$17.40	$20.71	$17.74
NRC - 1st	U1TD6	$144.27	$137.15	$79.61	$142.31	$104.23	$144.77	$137.48	$136.44	$83.35
NRC - Add'l	U1TD6	$54.15	$64.45	$36.08	$56.21	$39.91	$56.06	$52.58	$51.37	$20.88
NRC - Incremental Charge - Manual Service Order - 1st	SOMAC	$40.34	NA	$18.94	$37.21	$26.20	$36.86	$38.07	$39.63	$30.15
NRC - Incremental Charge - Manual Service Order - Add'l	SOMAC	$40.34	NA	$18.94	$37.21	$26.20	$36.86	$38.07	$39.63	$31.63
Interoffice Channel - Dedicated Transport - DS1										
Interoffice Channel - Dedicated Transport - DS1- per mile per month	1L5XX	$0.69	$0.6013	$0.4523	$0.45	$0.7831	$0.6598	$0.5753	$0.7598	$0.3525
Interoffice Channel - Dedicated Transport - DS1 facility termination per month	U1TF1	$79.69	$99.79	$78.47	$55.05	$93.40	$74.40	$71.29	$94.98	$75.83
NRC - 1st	U1TF1	$223.59	$45.91	$147.07	$298.18	$160.49	$222.81	$217.17	$216.27	$166.53
NRC - Add'l	U1TF1	$168.60	$44.18	$111.75	$231.23	$123.03	$168.92	$163.75	$162.70	$124.84
NRC - Incremental Charge - Manual Service Order - 1st	SOMAC	$40.34	NA	$18.94	NA	$26.20	$36.83	$38.07	$39.63	$30.15
NRC - Incremental Charge - Manual Service Order - Add'l	SOMAC	$40.34	NA	$18.94	NA	$26.20	$36.86	$38.07	$39.63	$31.63
Interoffice Channel - Dedicated Transport - DS3										
Interoffice Channel - Dedicated Transport - DS3 - per mile per month	1L5XX	$11.93	$10.25	$7.07	$12.06	$16.15	$15.02	$12.98	$19.14	$6.88
Interoffice Channel - Dedicated Transport - DS3 - facility termination per month	U1TF3	$736.60	$994.83	$743.41	$1,112.02	$1,131.09	$744.38	$720.38	$904.49	$840.61
NRC - 1st	U1TF3	$877.36	$884.71	$878.95	$858.75	$883.62	$812.30	$794.94	$856.96	$877.70
NRC - Add'l	U1TF3	$540.46	$552.81	$542.61	$524.95	$545.50	$596.55	$579.55	$522.20	$540.32
NRC - Incremental Charge - Manual Service Order - 1st	SOMAC	$101.69	NA	$98.49	$94.57	$99.02	$92.05	$91.26	$99.09	$102.75
NRC - Incremental Charge - Manual Service Order - Add'l	SOMAC	$101.69	NA	$98.49	$94.57	$101.69	$92.05	$91.26	$99.09	$102.75
Interoffice Channel - Dedicated Transport - STS-1										
Interoffice Channel - Dedicated Transport - STS-1 - per mile per month	1L5XX	$11.93	$10.25	$7.07	$12.06	$16.15	$13.48	$11.62	$19.14	$6.88
Interoffice Channel - Dedicated Transport - STS-1 - facility termination per month	U1TFS	$733.93	$966.49	$733.72	$1,088.67	$1,114.68	$692.52	$814.72	$944.40	$838.65
NRC - 1st	U1TFS	$858.02	$868.23	$856.62	$858.75	$861.17	$858.15	$857.29	$861.20	$858.26
NRC - Add'l	U1TFS	$524.50	$530.74	$523.64	$524.94	$526.42	$524.58	$524.05	$526.44	$525.25
NRC - Incremental Charge - Manual Service Order - 1st	SOMAC	$94.49	$95.61	$94.34	$94.57	$94.84	$94.50	$94.41	$94.84	$94.63
NRC - Incremental Charge - Manual Service Order - Add'l	SOMAC	$94.49	$95.61	$94.34	$94.57	$94.84	$94.50	$94.41	$94.84	$94.63
Local Channel - Dedicated Transport										
Local Channel - Dedicated Transport - 2-Wire VG										
Monthly Recurring	ULDV2	$14.61	$18.02	$13.91	$22.26	$14.94	$17.83	$14.82	$16.83	$19.02
NRC - 1st	ULDV2	$572.46	$477.33	$382.95	$597.14	$401.17	$565.31	$553.80	$554.00	$254.14
NRC - Add'l	ULDV2	$92.07	$124.32	$62.40	$110.52	$66.35	$93.30	$86.69	$88.58	$28.96
NRC - Incremental Charge - Manual Service Order - 1st	SOMAC	$45.12	NA	$18.94	$41.46	$29.54	$41.57	$42.17	$43.75	$33.65
NRC - Incremental Charge - Manual Service Order - Add'l	SOMAC	$18.73	NA	$8.42	NA	$19.46	$27.39	$12.76	$13.55	$23.84
Local Channel - Dedicated Transport - 4-Wire VG										
Monthly Recurring	ULDD6	$15.77	$19.01	$14.99	$23.38	$16.21	$19.03	$15.87	$18.05	$20.14
NRC - 1st	ULDD6	$581.14	$77.33	$368.44	$585.15	$407.11	$573.83	$562.23	$562.46	$257.05
NRC - Add'l	ULDD6	$95.21	$124.32	$64.05	$98.53	$68.61	$96.40	$92.67	$91.57	$30.34
NRC - Incremental Charge - Manual Service Order - 1st	SOMAC	$45.12	NA	$18.94	$98.53	$29.54	$41.57	$42.17	$43.64	$33.65
NRC - Incremental Charge - Manual Service Order - Add'l	SOMAC	$18.73	NA	$8.42	$11.99	$19.46	$27.39	$12.76	$13.55	$23.84
Local Channel - Dedicated Transport - DS1										
Monthly Recurring	TMECS	$35.52	$44.35	$38.36	$43.80	$43.80	$38.91	$35.68	$37.20	$40.27
NRC - 1st	TMECS	$549.85	$246.50	$356.15	$538.95	$396.86	$588.53	$534.48	$534.81	$343.71

DESCRIPTION	USOC	AL	FL	GA	KY	LA	MS	NC	SC	TN
NRC - Add'l	TMECS	$475.02	$230.49	$312.89	$464.94	$342.92	$501.32	$462.69	$462.81	$277.86
NRC - Incremental Charge - Manual Service Order - 1st	SOMAC	$91.22	NA	$44.22	$87.71	$61.82	$81.30	$42.17	$87.99	$23.51
NRC - Incremental Charge - Manual Service Order - Add'l	SOMAC	NA	NA	NA	NA	NA	NA	$12.76	$3.11	$21.75
Local Channel - Dedicated Transport – DS3										
DS3 - per mile per month	1L5NC	$34.21	$30.65	$23.06	$34.00	$30.34	NA	NA	$44.13	$23.76
DS3 - Facility Termination per month	ULDF3	$536.23	$598.84	$531.90	$635.09	$669.01	NA	$498.87	$582.93	$607.28
NRC - 1st	ULDF3	$877.36	$884.71	$878.95	$858.75	$883.62	$858.15	$562.25	$856.96	$877.70
NRC - Add'l	ULDF3	$540.46	$552.81	$542.61	$524.95	$545.50	$524.58	$527.88	$522.20	$540.32
NRC - Incremental Charge - Manual Service Order - 1st	SOMAC	$101.69	NA	$98.49	NA	$99.02	NA	$56.25	NA	$102.75
NRC - Incremental Charge - Manual Service Order - Add'l	SOMAC	$101.69	NA	$98.49	NA	$99.02	NA	$56.25	NA	$102.75
Local Channel - Dedicated Transport – STS-1										
STS-1 - per mile per month	1L5NC	$24.82	$27.61	$19.93	$30.04	$29.89	$38.98	$24.39	$29.97	$25.11
STS-1 - Facility Termination per month	ULDFS	$502.62	$681.61	$516.91	$610.64	$693.02	$531.39	$555.92	$556.66	$615.65
NRC - 1st	ULDFS	$1,084.17	$1,097.06	$1,082.37	$1,085.09	$1,088.15	$1,084.33	$1,083.24	$1,088.19	$1,085.73
NRC - Add'l	ULDFS	$682.02	$690.14	$680.91	$682.61	$684.53	$682.13	$681.44	$684.56	$683.01
NRC - Incremental Charge - Manual Service Order - 1st	SOMAC	$96.08	$97.23	$95.93	$96.17	$96.44	$96.10	$96.00	$96.44	$96.22
NRC - Incremental Charge - Manual Service Order - Add'l	SOMAC	$96.08	$97.23	$95.93	$96.17	$96.44	$96.10	$96.00	$96.44	$96.22
CHANNELIZATION										
DS3 Channelization (DS3 to DS1)										
per Channelized System per month	MQ3	$210.87	$213.22	$173.51	$236.32	$245.84	$229.30	$226.81	$204.07	$225.59
NRC - 1st	MQ3	$355.25	$280.12	$284.43	$425.41	$259.76	$356.80	$351.95	$423.77	$265.08
NRC - Add'l	MQ3	$245.86	$196.07	$199.98	$303.33	$182.64	$247.40	$243.76	$295.21	$185.94
NRC -1sr - Disconnect	MQ3	$78.43	$64.06	$66.76	NA	$60.96	$79.94	$77.90	NA	$61.09
NRC -Add'l - Disconnect	MQ3	$63.70	$52.60	$55.25	NA	$50.46	$65.20	$63.32	NA	$50.31
NRC - Channel System - Incremental Cost - Manual Svc. Order -1st	SOMAC	$28.44	NA	$21.61	$41.47	$19.74	$26.95	$28.13	$43.41	$21.71
NRC - Channel System - Incremental Cost - Manual Svc. Order - Add'l	SOMAC	$13.47	NA	$9.61	NA	$8.77	$11.98	$13.33	$15.36	$10.46
NRC - Channel System - Incremenatl Cost - Manual Svc. Order - Disconnect - 1st	SOMAC	$18.46	NA	$13.61	NA	$12.43	$16.97	$18.26	NA	$14.21
NRC - Channel System - Incremenatl Cost - Manual Svc. Order - Disconnect - Add	SOMAC	$1.50	NA	NA	NA	NA	NA	$1.48	NA	$1.46
per Interface per month	1PQE1	$4.53	$6.31	$7.13	$8.52	$7.55	$5.58	$4.61	$9.69	$3.91
NRC - 1st	1PQE1	$15.85	$13.39	$13.45	$15.86	$12.29	$15.85	$15.76	$15.54	$12.61
NRC - Add'l	1PQE1	$11.35	$9.59	$9.63	$11.36	$8.80	$11.35	$11.28	$11.13	$9.03
DS1 Channelization (DS1 to DS0)										
per Channelized System per month	MQ1	$139.58	$163.88	$137.97	$200.01	$209.87	$146.87	$177.72	$179.81	$165.21
NRC - 1st	MQ1	$269.98	$208.64	$212.01	$302.82	$193.63	$271.52	$267.19	$304.00	$197.21
NRC - Add'l	MQ1	$163.04	$126.61	$129.60	$184.20	$118.37	$164.56	$161.43	$178.92	$119.99
NRC -1sr - Disconnect	MQ1	$34.88	$26.42	$28.95	NA	$26.44	$36.38	$34.55	NA	$25.66
NRC -Add'l - Disconnect	MQ1	$21.32	$15.95	$18.43	NA	$16.83	$22.82	$21.14	NA	$15.81
NRC - Channel System - Incremental Cost - Manual Svc. Order -1st	SOMAC	$28.44	NA	$21.61	$41.47	$19.74	$26.95	$28.13	$43.41	$21.71
NRC - Channel System - Incremental Cost - Manual Svc. Order -Add'l	SOMAC	$13.47	NA	$9.61	$11.99	$8.77	$11.98	$13.33	$15.36	$10.46
NRC - Channel System - Incremental Cost - Manual Svc. Order - Disconnect -1st	SOMAC	$18.46	NA	$13.61	NA	$12.43	$16.97	$18.26	NA	$14.21
NRC - Channel System - Incremental Cost - Manual Svc. Order - Disconnect -Add	SOMAC	$1.50	NA	NA	NA	NA	NA	$1.48	NA	$1.46
DS1 Channization Interfaces										
per OCU-DP(data) card per month(2.4-64kbps)	1D1DD	$2.61	$3.13	$2.65	$2.94	$3.12	$2.86	$2.88	$3.36	$2.46
NRC - 1st	1D1DD	$15.85	$13.39	$13.45	$15.86	$12.29	$15.85	$15.76	$15.54	$12.61
NRC - Add'l	1D1DD	$11.35	$9.59	$9.63	$11.36	$8.80	$11.35	$11.28	$11.13	$9.03
per VG card per month	1D1VG	$1.26	$1.78	$1.48	$1.40	$1.62	$1.45	$1.64	$1.93	$1.25
NRC - 1st	1D1VG	$15.85	$13.39	$13.45	$15.86	$12.29	$15.85	$15.76	$15.54	$12.61
NRC - Add'l	1D1VG	$11.35	$9.59	$9.63	$11.36	$8.80	$11.35	$11.28	$11.13	$9.03
DARK FIBER										
Per four fiber strands, per route mile or fraction thereof, per month	1L5DF	$59.84	$55.35	$44.22	$64.64	$65.29	$70.35	$49.88	$72.45	$52.67
NRC - Per each four-fiber dark fiber arrangement - 1st	1L5DF	$2,518.66	$1,715.61	$1,355.29	$2,304.00	$1,685.19	$2,389.99	$2,277.00	$2,406.00	$1,672.44
NRC - Per each four-fiber dark fiber arrangement - Add'l	1L5DF	$835.08	$622.68	$273.69	$740.93	$580.11	$804.32	$733.08	$765.30	$509.09

DESCRIPTION	USOC	AL	FL	GA	KY	LA	MS	NC	SC	TN
UNBUNDLED LOOP COMBINATIONS										
Unbundled Loop/Port Combinations (Notes 4 & 5)										
UNBUNDLED LOOP BILLING USOC (REQUIRES ONE PER PORT)	UEPLX	This USOC to be used for Unbundled Loop when ordering Loop/Port Combination								
LOCAL NUMBER PORTABILITY (REQUIRES ONE PER PORT)	LNPCX	This USOC to be used for Local Number Portability when ordering Loop/Port Combinations								
Zone 1 / Top 8 MSAs in BellSouth Region										
Currently Combined										
Customers with less than 4 DS0 Equivalent										
2-Wire Voice Grade Loop with 2-Wire Line Port										
RC - 2-Wire Voice Grade Loop with 2-Wire Line Port, Statewide	TBD	NA	NA	$14.34	NA	NA	NA	$16.46	NA	NA
RC - 2-Wire Voice Grade Loop with 2-Wire Line Port, Zone 1 (Note 6)	TBD	NA	NA	$12.59	NA	NA	NA	NA	NA	NA
RC - 2-Wire Voice Grade Loop with 2-Wire Line Port, Zone 2 (Note 6)	TBD	NA	NA	$14.26	NA	NA	NA	NA	NA	NA
RC - 2-Wire Voice Grade Loop with 2-Wire Line Port, Zone 3 (Note 6)	TBD	NA	NA	$21.62	NA	NA	NA	NA	NA	NA
RC - 2-Wire Voice Grade Loop with 2-Wire Line Port, Zone 4 (Note 6)	TBD	NA	NA	NA	NA	NA	NA	NA	NA	NA
RC - 2- Wire Voice Grade Loop	UEPLX	Note 1	Note 1	NA	Note 1	Note 1	Note 1	Note 1	Note 1	Note 1
RC - Exchange Port - 2-Wire Line Port	TBD	Note 1	Note 1	NA	Note 1	Note 1	Note 1	Note 1	Note 1	Note 1
NRC - 2-Wire Voice Grade Loop/Line Port Combination - 1st, no change	USAC2	$10.00	$10.00	$2.01	$10.00	$10.00	$10.00	$2.77	$10.00	$10.00
NRC - 2-Wire Voice Grade Loop/Line Port Combination - Add'l, no change	USAC2	$10.00	$10.00	$0.3108000	$10.00	$10.00	$10.00	$0.40	$10.00	$10.00
NRC - 2-Wire Voice Grade Loop/Line Port Combination - Subsequent	USASC	$10.00	$10.00	$10.00	$10.00	$10.00	$10.00	$10.00	$10.00	$10.00
NRC - 2-Wire Voice Grade Loop/Line Port Combination - OSS LSR Charge, Electronic, per LSR received from the CLEC by one of the OSS interactive interfaces	SOMEC	$3.50	$3.50	$3.50	$3.50	$3.50	$3.50	$3.50	$3.50	$3.50
NRC - 2-Wire Voice Grade Loop/Line Port Combination - Incremental Cost - Manual Svc.Order vs. Electronic - 1st	TBD	NA	NA	$33.67	NA	NA	NA	$40.18	NA	NA
NRC - 2-Wire Voice Grade Loop/Line Port Combination - Incremental Cost - Manual Svc.Order vs. Electronic - Add'l	TBD	NA	NA	$7.88	NA	NA	NA	$9.45	NA	NA
NRC - 2-Wire Voice Grade Loop/Line Port Combination - Incremental Cost - Manual Svc.Order vs. Electronic	SOMAN	$19.99	$19.99	NA	$19.99	$19.99	$19.99	NA	$19.99	$19.99
NRC- 2 Wire Voice Grade Loop/Line Port Combination - Subsequent Database Update - Electronic	TBD	NA	NA	NA	NA	NA	NA	$1.42	NA	NA
NRC- 2 Wire Voice Grade Loop/Line Port Combination - Subsequent Database Update - Manual Service Order	TBD	NA	NA	NA	NA	NA	NA	$10.27	NA	NA
2- Wire Voice Grade Loop with 2 -Wire DID Trunk Port										
RC- 2 Wire Voice Grade Loop with 2 - Wire Line Port	TBD	NA	NA	NA	NA	NA	NA	$23.79	NA	NA
NRC- 2- Wire Voice Grade Loop with 2- Wire Line Port - 1st	TBD	NA	NA	NA	NA	NA	NA	$13.26	NA	NA
NRC- 2- Wire Voice Grade Loop with 2- Wire Line Port - Addl	TBD	NA	NA	NA	NA	NA	NA	$8.39	NA	NA
NRC- 2- Wire Voice Grade Loop with 2- Wire Line Port - Incremental Cost- Manual Service Order - 1st	TBD	NA	NA	NA	NA	NA	NA	$53.89	NA	NA
NRC- 2- Wire Voice Grade Loop with 2- Wire Line Port - Incremental Cost- Manual Service Order - Addl	TBD	NA	NA	NA	NA	NA	NA	$11.34	NA	NA
2-Wire ISDN Digital Grade Loop with 2-wire ISDN Digital Port										
RC - 2-Wire ISDN Digital Grade Loop	USL2X	$19.08	$19.08	$19.08	$19.08	$19.08	$19.08	$19.08	$19.08	$18.32
RC - Exchange Port - 2-Wire ISDN Line Side Port	UEPPB	$24.37	$24.37	$24.37	$24.37	$24.37	$24.37	$24.37	$24.37	$15.72
RC- 2-Wire ISDN Digital Grade Loop with 2-wire ISDN Digital Port	TBD	NA	NA	NA	NA	NA	NA	$43.45	NA	NA
NRC - 2-Wire ISDN Digital Grade Loop/2-wire ISDN Digital Port - 1st conversion	USACB	$174.35	$174.35	$174.35	$174.35	$174.35	$174.35	$174.35	$174.35	$117.23
NRC - 2-Wire ISDN Digital Grade Loop/2-wire ISDN Digital Port - Add'l conversion	USACB	$174.35	$174.35	$174.35	$174.35	$174.35	$174.35	$174.35	$174.35	$117.23

DESCRIPTION	USOC	AL	FL	GA	KY	LA	MS	NC	SC	TN
NRC - 2-Wire ISDN Digital Grade Loop/2-wire ISDN Digital Port - Non Feature Subsequent Activity	USASB	$286.15	$286.15	$286.15	$286.15	$286.15	$286.15	$286.15	$286.15	$212.88
4-Wire ISDN Digital Grade Loop with 2-wire ISDN Digital Port										
RC - 4-Wire ISDN Digital Grade Loop	USL4P	$62.71	$62.71	$62.71	$62.71	$62.71	$62.71	$62.71	$62.71	$61.74
RC - Exchange Port - 4-Wire ISDN Digital Trunk Port	UEPPP	$179.01	$179.01	$179.01	$179.01	$179.01	$179.01	$179.01	$179.01	$73.62
NRC - 4-Wire ISDN Digital Grade Loop/2-wire ISDN Digital Trunk Port Combination - 1st conversion	USACP	$481.51	$481.51	$481.51	$481.51	$481.51	$481.51	$481.51	$481.51	$328.53
NRC - 4-Wire ISDN Digital Grade Loop/2-wire ISDN Digital Trunk Port Combination - Add'l conversion	USACP	$481.51	$481.51	$481.51	$481.51	$481.51	$481.51	$481.51	$481.51	$328.53
Combination - Subsequent Channel Activity - Per Channel	USASP	$36.92	$36.92	$36.92	$36.92	$36.92	$36.92	$36.92	$36.92	$28.39
NRC - 4-Wire ISDN Digital Grade Loop/4-wire ISDN Digital Trunk Port Combination - Subsequent Inward/2-way Telephone Numbers	PR7TG	$1.17	$1.17	$1.17	$1.17	$1.17	$1.17	$1.17	$1.17	$0.94
NRC - 4-Wire ISDN Digital Grade Loop/4-wire ISDN Digital Trunk Port Combination - Subsequent Outward Telephone numbers	PR7TP	$28.17	$28.17	$28.17	$28.17	$28.17	$28.17	$28.17	$28.17	$22.36
NRC - 4-Wire ISDN Digital Grade Loop/4-wire ISDN Digital Trunk Port Combination - Subsequent Inward Telephone Numbers	PR7ZT	$56.33	$56.33	$56.33	$56.33	$56.33	$56.33	$56.33	$56.33	$44.71
NRC - 4-Wire ISDN Digital Grade Loop/4-wire ISDN Digital Trunk Port Combination - Subsequent Service Order Per Order	USASP	$255.25	$255.25	$255.25	$255.25	$255.25	$255.25	$255.25	$255.25	$189.76
4 - Wire DS1 Digital Loop with 4 - Wire ISDN DS1 Digital Trunk Port										
RC - 4 - Wire DS1 Digital Loop with 4 - Wire ISDN DS1 Digital Trunk Port	TBD	NA	NA	NA	NA	NA	NA	$241.72	NA	NA
NRC -4 - Wire DS1 Digital Loop with 4 - Wire ISDN DS1 Digital Trunk Port - 1st	TBD	NA	NA	NA	NA	NA	NA	$481.51	NA	NA
NRC -4 - Wire DS1 Digital Loop with 4 - Wire ISDN DS1 Digital Trunk Port - Addl	TBD	NA	NA	NA	NA	NA	NA	$481.51	NA	NA
NRC -4 - Wire DS1 Digital Loop with 4 - Wire ISDN DS1 Digital Trunk Port - Subsequent Channel Activation - Per Channel	TBD	NA	NA	NA	NA	NA	NA	$36.92	NA	NA
NRC -4 - Wire DS1 Digital Loop with 4 - Wire ISDN DS1 Digital Trunk Port - Subsequent Inward/2way Telephone Numbers	TBD	NA	NA	NA	NA	NA	NA	$1.17	NA	NA
NRC -4 - Wire DS1 Digital Loop with 4 - Wire ISDN DS1 Digital Trunk Port - Subsequent Outward Telephone Numbers	TBD	NA	NA	NA	NA	NA	NA	$28.17	NA	NA
NRC -4 - Wire DS1 Digital Loop with 4 - Wire ISDN DS1 Digital Trunk Port - Subsequent Inward Telephone Numbers	TBD	NA	NA	NA	NA	NA	NA	$56.33	NA	NA
NRC -4 - Wire DS1 Digital Loop with 4 - Wire ISDN DS1 Digital Trunk Port - Subsequent Service Order Per Order	TBD	NA	NA	NA	NA	NA	NA	$255.25	NA	NA
4 - Wire DS1 Digital Loop with 4 - Wire DID Trunk Port										
RC - 4 - Wire DS1 Digital Loop with 4 - Wire DID Trunk Port	TBD	NA	NA	NA	NA	NA	NA	$186.23	NA	NA
NRC -4 - Wire DS1 Digital Loop with 4 - Wire DID Trunk Port - 1st	TBD	NA	NA	NA	NA	NA	NA	$490.38	NA	NA
NRC -4 - Wire DS1 Digital Loop with 4 - Wire ISDN DS1 Digital Trunk Port - Addl	TBD	NA	NA	NA	NA	NA	NA	$490.38	NA	NA
NRC -4 - Wire DS1 Digital Loop with 4 - Wire DIDTrunk Port - Subsequent Channel Activation - Per Channel	TBD	NA	NA	NA	NA	NA	NA	$146.91	NA	NA
NRC -4 - Wire DS1 Digital Loop with 4 - Wire ISDN DS1 Digital Trunk Port - Subsequent Telephone Numbers	TBD	NA	NA	NA	NA	NA	NA	$120.96	NA	NA
NRC -4 - Wire DS1 Digital Loop with 4 - Wire ISDN DS1 Digital Trunk Port - Subsequent Signaling Changes	TBD	NA	NA	NA	NA	NA	NA	$29.65	NA	NA
NRC -4 - Wire DS1 Digital Loop with 4 - Wire ISDN DS1 Digital Trunk Port - Subsequent Service Order Per Order	TBD	NA	NA	NA	NA	NA	NA	$127.63	NA	NA
Customers with 4 or more DS0 Equivalent										
2-Wire Voice Grade Loop with 2-Wire Line Port	TBD	Note 3	Note 3	Note 3	Note 3	Note 3	Note 3	Note 3	Note 3	Note 3

DESCRIPTION	USOC	AL	FL	GA	KY	LA	MS	NC	SC	TN
All Other Loop/Port Combinations	TBD	TBN	TBN	TBN	TBN	TBN	TBN	TBN	TBN	TBN
Not Currently Combined										
Customers with less than 4 DS0 Equivalent										
2-Wire Voice Grade Loop with 2-Wire Line Port										
RC - 2-Wire Voice Grade Loop with 2-Wire Line Port, Statewide	TBD	NA	NA	$14.34	NA	NA	NA	NA	NA	NA
RC - 2-Wire Voice Grade Loop with 2-Wire Line Port, Zone 1 (Note 6)	TBD	NA	NA	$12.59	NA	NA	NA	NA	NA	NA
RC - 2-Wire Voice Grade Loop with 2-Wire Line Port, Zone 2 (Note 6)	TBD	NA	NA	$14.26	NA	NA	NA	NA	NA	NA
RC - 2-Wire Voice Grade Loop with 2-Wire Line Port, Zone 3 (Note 6)	TBD	NA	NA	$21.62	NA	NA	NA	NA	NA	NA
RC - 2-Wire Voice Grade Loop with 2-Wire Line Port, Zone 4 (Note 6)	TBD	NA	NA	NA	NA	NA	NA	NA	NA	NA
RC - 2- Wire Voice Grade Loop	UEPLX	Note 3	Note 3	NA	Note 3	Note 3	Note 3	Note 3	Note 3	Note 3
RC - Exchange Port - 2-Wire Line Port	TBD	Note 3	Note 3	NA	Note 3	Note 3	Note 3	Note 3	Note 3	Note 3
NRC - 2-Wire Voice Grade Loop/Line Port Combination - 1st, no change	USAC2	Note 3	Note 3	$2.01	Note 3	Note 3	Note 3	Note 3	Note 3	Note 3
NRC - 2-Wire Voice Grade Loop/Line Port Combination - Add'l, no change	USAC2	Note 3	Note 3	$0.3108000	Note 3	Note 3	Note 3	Note 3	Note 3	Note 3
NRC - 2-Wire Voice Grade Loop/Line Port Combination - Subsequent	USASC	$10.00	$10.00	$10.00	$10.00	$10.00	$10.00	$10.00	$10.00	$10.00
NRC - 2-Wire Voice Grade Loop/Line Port Combination - Incremental Cost - Manual Svc.Order vs. Electronic - 1st	TBD	Note 3	Note 3	$33.67	Note 3	Note 3	Note 3	Note 3	Note 3	Note 3
NRC - 2-Wire Voice Grade Loop/Line Port Combination - Incremental Cost - Manual Svc.Order vs. Electronic - Add'l	TBD	Note 3	Note 3	$7.88	Note 3	Note 3	Note 3	Note 3	Note 3	Note 3
2-Wire ISDN Digital Grade Loop with 2-wire ISDN Digital Port										
RC - 2-Wire ISDN Digital Grade Loop	USL2X	$19.08	$19.08	$19.08	$19.08	$19.08	$19.08	$19.08	$19.08	$18.32
RC - Exchange Port - 2-Wire ISDN Line Side Port	UEPPB	$24.37	$24.37	$24.37	$24.37	$24.37	$24.37	$24.37	$24.37	$15.72
NRC - 2-Wire ISDN Digital Grade Loop/2-wire ISDN Digital Port - 1st conversion	USACB	$174.35	$174.35	$174.35	$174.35	$174.35	$174.35	$174.35	$174.35	$117.23
NRC - 2-Wire ISDN Digital Grade Loop/2-wire ISDN Digital Port - Add'l conversion	USACB	$174.35	$174.35	$174.35	$174.35	$174.35	$174.35	$174.35	$174.35	$117.23
NRC - 2-Wire ISDN Digital Grade Loop/2-wire ISDN Digital Port - Non Feature Subsequent Activity	USASB	$286.15	$286.15	$286.15	$286.15	$286.15	$286.15	$286.15	$286.15	$212.88
4-Wire ISDN Digital Grade Loop with 2-wire ISDN Digital Port										
RC - 4-Wire ISDN Digital Grade Loop	USL4P	$62.71	$62.71	$62.71	$62.71	$62.71	$62.71	$62.71	$62.71	$61.74
RC - Exchange Port - 4-Wire ISDN Digital Trunk Port	UEPPP	$179.01	$179.01	$179.01	$179.01	$179.01	$179.01	$179.01	$179.01	$73.62
NRC - 4-Wire ISDN Digital Grade Loop/2-wire ISDN Digital Trunk Port Combination - 1st conversion	USACP	$481.51	$481.51	$481.51	$481.51	$481.51	$481.51	$481.51	$481.51	$328.53
NRC - 4-Wire ISDN Digital Grade Loop/2-wire ISDN Digital Trunk Port Combination - Add'l conversion	USACP	$481.51	$481.51	$481.51	$481.51	$481.51	$481.51	$481.51	$481.51	$328.53
Combination - Subsequent Channel Activity - Per Channel	USASP	$36.92	$36.92	$36.92	$36.92	$36.92	$36.92	$36.92	$36.92	$28.39
NRC - 4-Wire ISDN Digital Grade Loop/4-wire ISDN Digital Trunk Port Combination - Subsequent Inward/2-way Telephone Numbers	PR7TG	$1.17	$1.17	$1.17	$1.17	$1.17	$1.17	$1.17	$1.17	$0.94
NRC - 4-Wire ISDN Digital Grade Loop/4-wire ISDN Digital Trunk Port Combination - Subsequent Outward Telephone numbers	PR7TP	$28.17	$28.17	$28.17	$28.17	$28.17	$28.17	$28.17	$28.17	$22.36
NRC - 4-Wire ISDN Digital Grade Loop/4-wire ISDN Digital Trunk Port Combination - Subsequent Inward Telephone Numbers	PR7ZT	$56.33	$56.33	$56.33	$56.33	$56.33	$56.33	$56.33	$56.33	$44.71
NRC - 4-Wire ISDN Digital Grade Loop/4-wire ISDN Digital Trunk Port Combination - Subsequent Service Order Per Order	USASP	$255.25	$255.25	$255.25	$255.25	$255.25	$255.25	$255.25	$255.25	$189.76
All Other Loop/Port Combinations	TBD	TBN	TBN	Note 2	TBN	TBN	TBN	TBN	TBN	TBN
Customers with 4 or more DS0 Equivalent										
2-Wire Voice Grade Loop with 2-Wire Line Port	TBD	Note 3	Note 3	Note 3	Note 3	Note 3	Note 3	Note 3	Note 3	Note 3
All Other Loop/Port Combinations	TBD	TBN	TBN	TBN	TBN	TBN	TBN	TBN	TBN	TBN

DESCRIPTION	USOC	AL	FL	GA	KY	LA	MS	NC	SC	TN
All other MSAs in BellSouth Region										
Currently Combined										
2-Wire Voice Grade Loop with 2-Wire Line Port										
RC - 2-Wire Voice Grade Loop with 2-Wire Line Port, Statewide	TBD	NA	NA	$14.34	NA	NA	NA	$16.46	NA	NA
RC - 2-Wire Voice Grade Loop with 2-Wire Line Port, Zone 1 (Note 6)	TBD	NA	NA	$12.59	NA	NA	NA	NA	NA	NA
RC - 2-Wire Voice Grade Loop with 2-Wire Line Port, Zone 2 (Note 6)	TBD	NA	NA	$14.26	NA	NA	NA	NA	NA	NA
RC - 2-Wire Voice Grade Loop with 2-Wire Line Port, Zone 3 (Note 6)	TBD	NA	NA	$21.62	NA	NA	NA	NA	NA	NA
RC - 2-Wire Voice Grade Loop with 2-Wire Line Port, Zone 4 (Note 6)	TBD	NA	NA	NA	NA	NA	NA	NA	NA	NA
RC - 2- Wire Voice Grade Loop	UEPLX	Note 1	Note 1	NA	Note 1	Note 1	Note 1	Note 1	Note 1	Note 1
RC - Exchange Port - 2-Wire Line Port	TBD	Note 1	Note 1	NA	Note 1	Note 1	Note 1	Note 1	Note 1	Note 1
NRC - 2-Wire Voice Grade Loop/Line Port Combination - 1st, no change	USAC2	$10.00	$10.00	$2.01	$10.00	$10.00	$10.00	$2.77	$10.00	$10.00
NRC - 2-Wire Voice Grade Loop/Line Port Combination - Add'l, no change	USAC2	$10.00	$10.00	$0.3108000	$10.00	$10.00	$10.00	$0.40	$10.00	$10.00
NRC - 2-Wire Voice Grade Loop/Line Port Combination - Subsequent	USASC	$10.00	$10.00	$10.00	$10.00	$10.00	$10.00	$10.00	$10.00	$10.00
NRC - 2-Wire Voice Grade Loop/Line Port Combination - OSS LSR Charge, Electronic, per LSR received from the CLEC by one of the OSS interactive interfaces	SOMEC	$3.50	$3.50	$3.50	$3.50	$3.50	$3.50	$3.50	$3.50	$3.50
NRC - 2-Wire Voice Grade Loop/Line Port Combination - Incremental Cost - Manual Svc.Order vs. Electronic - 1st	TBD	NA	NA	$33.67	NA	NA	NA	$40.18	NA	NA
NRC - 2-Wire Voice Grade Loop/Line Port Combination - Incremental Cost - Manual Svc.Order vs. Electronic - Add'l	TBD	NA	NA	$7.88	NA	NA	NA	$9.45	NA	NA
NRC - 2-Wire Voice Grade Loop/Line Port Combination - Incremental Cost - Manual Svc.Order vs. Electronic	SOMAN	$19.99	$19.99	NA	$19.99	$19.99	$19.99	NA	$19.99	$19.99
All Other Loop/Port Combinations	TBD	TBN	TBN	Note 2	TBN	TBN	TBN	TBN	TBN	TBN
Not Currently Combined										
2-Wire Voice Grade Loop with 2-Wire Line Port										
RC - 2-Wire Voice Grade Loop with 2-Wire Line Port, Statewide	TBD	NA	NA	$14.34	NA	NA	NA	NA	NA	NA
RC - 2-Wire Voice Grade Loop with 2-Wire Line Port, Zone 1 (Note 6)	TBD	NA	NA	$12.59	NA	NA	NA	NA	NA	NA
RC - 2-Wire Voice Grade Loop with 2-Wire Line Port, Zone 2 (Note 6)	TBD	NA	NA	$14.26	NA	NA	NA	NA	NA	NA
RC - 2-Wire Voice Grade Loop with 2-Wire Line Port, Zone 3 (Note 6)	TBD	NA	NA	$21.62	NA	NA	NA	NA	NA	NA
RC - 2-Wire Voice Grade Loop with 2-Wire Line Port, Zone 4 (Note 6)	TBD	NA	NA	NA	NA	NA	NA	NA	NA	NA
RC - 2- Wire Voice Grade Loop	UEPLX	Note 3	Note 3	NA	Note 3	Note 3	Note 3	Note 3	Note 3	Note 3
RC - Exchange Port - 2-Wire Line Port	TBD	Note 3	Note 3	NA	Note 3	Note 3	Note 3	Note 3	Note 3	Note 3
NRC - 2-Wire Voice Grade Loop/Line Port Combination - 1st, with change	USACC	Note 3	Note 3	$2.01	Note 3	Note 3	Note 3	Note 3	Note 3	Note 3
NRC - 2-Wire Voice Grade Loop/Line Port Combination - Add'l. with change	USACC	Note 3	Note 3	$0.3108000	Note 3	Note 3	Note 3	Note 3	Note 3	Note 3
NRC - 2-Wire Voice Grade Loop/Line Port Combination - 1st, no change	USAC2	Note 3	Note 3	$2.01	Note 3	Note 3	Note 3	Note 3	Note 3	Note 3
NRC - 2-Wire Voice Grade Loop/Line Port Combination - Add'l, no change	USAC2	Note 3	Note 3	$0.3108000	Note 3	Note 3	Note 3	Note 3	Note 3	Note 3
NRC - 2-Wire Voice Grade Loop/Line Port Combination - Subsequent	USASC	$10.00	$10.00	$10.00	$10.00	$10.00	$10.00	$10.00	$10.00	$10.00
NRC - 2-Wire Voice Grade Loop/Line Port Combination - Incremental Cost - Manual Svc.Order vs. Electronic - 1st	TBD	Note 3	Note 3	$33.67	Note 3	Note 3	Note 3	Note 3	Note 3	Note 3
NRC - 2-Wire Voice Grade Loop/Line Port Combination - Incremental Cost - Manual Svc.Order vs. Electronic - Add'l	TBD	Note 3	Note 3	$7.88	Note 3	Note 3	Note 3	Note 3	Note 3	Note 3
All Other Loop/Port Combinations	TBD	TBN	TBN	Note 2	TBN	TBN	TBN	TBN	TBN	TBN
MARKET RATES (INCLUDING ALL VERTICAL FEATURES)										
Currently Combined										
2-Wire Analog Line Port (Res., Bus.), per month	TBD	$14.00	$14.00	$14.00	$14.00	$14.00	$14.00	$14.00	$14.00	$14.00
2-Wire Analog Loop, per month	UEPLX	Note 3	Note 3	Note 3	Note 3	Note 3	Note 3	Note 3	Note 3	Note 3
NRC	TBD	$41.50	$41.50	$41.50	$41.50	$41.50	$41.50	$41.50	$41.50	$41.50
NRC - 2-Wire Voice Grade Loop/Line Port Combination - Subsequent	USASC	$10.00	$10.00	$10.00	$10.00	$10.00	$10.00	$10.00	$10.00	$10.00

DESCRIPTION	USOC	AL	FL	GA	KY	LA	MS	NC	SC	TN
NRC - 2-Wire Voice Grade Loop/Line Port Combination - OSS LSR Charge, Electronic, per LSR received from the CLEC by one of the OSS interactive interfaces	SOMEC	$3.50	$3.50	$3.50	$3.50	$3.50	$3.50	$3.50	$3.50	$3.50
NRC - Incremental Manual Service Order	SOMAN	$19.99	$19.99	$19.99	$19.99	$19.99	$19.99	$19.99	$19.99	$19.99
NRC - Incremental Manual Service Order Disconnect	TBD	$20.00	$20.00	$20.00	$20.00	$20.00	$20.00	$20.00	$20.00	$20.00
Not Currently Combined										
2-Wire Analog Line Port (Res., Bus.), per month	TBD	$14.00	$14.00	$14.00	$14.00	$14.00	$14.00	$14.00	$14.00	$14.00
2-Wire Analog Loop, per month	UEPLX	Note 3	Note 3	Note 3	Note 3	Note 3	Note 3	Note 3	Note 3	Note 3
NRC	TBD	$90.00	$90.00	$90.00	$90.00	$90.00	$90.00	$90.00	$90.00	$90.00
NRC - 2-Wire Voice Grade Loop/Line Port Combination - Subsequent	USASC	$10.00	$10.00	$10.00	$10.00	$10.00	$10.00	$10.00	$10.00	$10.00
NRC - 2-Wire Voice Grade Loop/Line Port Combination - OSS LSR Charge, Electronic, per LSR received from the CLEC by one of the OSS interactive interfaces	SOMEC	$3.50	$3.50	$3.50	$3.50	$3.50	$3.50	$3.50	$3.50	$3.50
NRC - Incremental Manual Service Order	SOMAN	$19.99	$19.99	$19.99	$19.99	$19.99	$19.99	$19.99	$19.99	$19.99
NRC - Incremental Manual Service Order Disconnect	TBD	$20.00	$20.00	$20.00	$20.00	$20.00	$20.00	$20.00	$20.00	$20.00

NOTES:

1. In the absence of ordered rates by a State Commission, the rates for Currently Combined combinations of loop and port network elements will be the sum of the stand alone recurring rates of the UNEs which make up the combinations.

2. For Georgia, on an interim basis, for those currently combined port/loop combinations defined by the Georgia Public Service Commission as not currently combined, the non-recurring and recurring rates for such UNE combinations shall be the sum of the stand-alone non-recurring and recurring rates of the UNEs which make up the combinations.

3. Where BellSouth is not required to provide combinations of loop/port network elements, the rates for the 2-wire voice grade loop with 2-wire line port combination will be as follows: the recurring charges will be the sum of the stand-alone UNE loop rates and the Market Rates for the port as set forth in this Exhibit. The non-recurring charges associated with these combinations are those non-recurring charges as set forth in this Exhibit under Market Rates.

4. Usage and Common Transport rates associated with the stand-alone UNE port elements will apply to all combinations of loop/port network elements.

5. The Extended Area Calling Plans set forth in the stand-alone UNE Port rates section will apply to combinations of the loop/port network elements.

6. Deaveraged rates by zone will be available, where indicated, effective May 1, 2000.

DESCRIPTION	USOC	AL	FL	GA	KY	LA	MS	NC	SC	TN
Unbundled Loop / Transport Combinations										
Enhanced Extended Link ("EEL")										
DEDICATED TRANSPORT - ALREADY COMBINED										
Local Loop - 2-wire VG - per month										
Statewide	UEAL2	$22.43	$17.00	$17.89	$23.35	$22.84	$25.05	$15.88	$26.25	$26.02
Zone 1 (Note 1)	TBD	NA	NA	$15.40	NA	NA	NA	NA	NA	NA
Zone 2 (Note 1)	TBD	NA	NA	$17.78	NA	NA	NA	NA	NA	NA
Zone 3 (Note 1)	TBD	NA	NA	$28.26	NA	NA	NA	NA	NA	NA
Zone 4 (Note 1)	TBD	NA	NA	NA	NA	NA	NA	NA	NA	NA
Local Loop - 4-wire VG - per month										
Statewide	UEAL4	$30.00	$30.00	$26.58	NA	$31.52	$30.55	$27.49	$35.86	$18.00
Zone 1 (Note 1)	TBD	NA	NA	$22.88	NA	NA	NA	NA	NA	NA
Zone 2 (Note 1)	TBD	NA	NA	$26.42	NA	NA	NA	NA	NA	NA
Zone 3 (Note 1)	TBD	NA	NA	$41.99	NA	NA	NA	NA	NA	NA
Zone 4 (Note 1)	TBD	NA	NA	NA	NA	NA	NA	NA	NA	NA
Local Loop - 56kbps - per month										
Statewide	UDL56	$34.15	$48.33	$29.92	NA	$35.58	$34.95	$32.67	$41.70	$42.23
Zone 1 (Note 1)	TBD	NA	NA	$26.44	NA	NA	NA	NA	NA	NA
Zone 2 (Note 1)	TBD	NA	NA	$30.53	NA	NA	NA	NA	NA	NA
Zone 3 (Note 1)	TBD	NA	NA	$48.53	NA	NA	NA	NA	NA	NA
Zone 4 (Note 1)	TBD	NA	NA	NA	NA	NA	NA	NA	NA	NA
Local Loop - 64 kbps - per month										
Statewide	UDL64	$34.15	$48.33	$29.22	NA	$35.58	$34.95	$32.67	$41.70	$42.23
Zone 1 (Note 1)	TBD	NA	NA	$26.44	NA	NA	NA	NA	NA	NA
Zone 2 (Note 1)	TBD	NA	NA	$30.53	NA	NA	NA	NA	NA	NA
Zone 3 (Note 1)	TBD	NA	NA	$48.53	NA	NA	NA	NA	NA	NA
Zone 4 (Note 1)	TBD	NA	NA	NA	NA	NA	NA	NA	NA	NA
Local Loop - DS1 - per month										
Statewide	USLXX	$64.65	$80.00	$60.88	$67.96	$72.86	$69.59	$62.78	$72.55	TBD
Zone 1 (Note 1)	TBD	NA	NA	$52.40	NA	NA	NA	NA	NA	NA
Zone 2 (Note 1)	TBD	NA	NA	$60.51	NA	NA	NA	NA	NA	NA
Zone 3 (Note 1)	TBD	NA	NA	$96.18	NA	NA	NA	NA	NA	NA
Zone 4 (Note 1)	TBD	NA	NA	NA	NA	NA	NA	NA	NA	NA
Local Loop - DS3 - per Mile	1L5ND	$43.96	$40.01	$29.96	$43.69	$38.98	$54.39	$32.53	$56.71	$30.53
Local Loop - DS3 - per Facility Termination	UE3PX	$456.18	$470.83	$392.61	$436.95	$497.08	$427.81	$387.01	$510.30	$400.21
Local Loop - STS-1 - per Mile	1L5ND	$43.96	$40.01	$29.96	$43.69	$38.98	$54.39	$32.53	$56.71	$30.53
Local Loop - STS-1 - per Facility Termination	UDLS1	$456.18	$470.83	$392.61	$436.95	$497.08	$427.81	$387.01	$510.30	$400.21
Local Channel - Dedicated - 2-Wire VG per month	ULDV2	$14.61	$18.02	$16.28	$22.26	$14.94	$17.83	$14.82	$16.83	$19.02
Local Channel - Dedicated - 4-Wire VG per month	ULDV4	$15.77	$19.01	$17.18	$23.38	$16.21	$19.03	$15.87	$18.05	$20.14
Local Channel - Dedicated - DS1 per month	TMECS	$35.52	$44.35	$38.57	$43.80	$43.80	$38.91	$35.68	$37.20	$40.27
Local Channel - Dedicated - DS3 - per mile per month	1L5NC	$34.21	$30.65	$23.06	$34.00	$30.34	NA	NA	$44.13	$23.76
Local Channel - Dedicated - DS3 - Facility Termination per month	ULDF3	$536.23	$598.84	$531.90	$635.09	$669.01	$526.67	$498.87	$582.93	$607.28
Local Channel - Dedicated - STS-1 - per mile per month	1L5NC	$24.82	$27.61	$19.93	$30.04	$29.89	$38.98	$24.39	$29.97	$25.11

DESCRIPTION	USOC	AL	FL	GA	KY	LA	MS	NC	SC	TN
Local Channel - Dedicated - STS-1 - Facility Termination per month	ULDS1	$502.62	$681.61	$516.91	$610.64	$693.02	$531.39	$555.92	$556.66	$615.65
Interoffice Channel - Dedicated - 2-Wire VG - per mile per month	1L5XX	$0.03	NA	$0.02	$0.03	$0.04	$0.03	$0.0282	$0.04	$0.02
Interoffice Channel - Dedicated - 2-Wire VG - Facility Termination per month	U1TV2	$18.49	NA	$17.07	$27.66	$19.10	$21.33	$18.00	$21.42	$18.33
Interoffice Channel - Dedicated - DS0 - 56kbps - per mile per month	1L5XX	$0.04	$0.03	$0.02	$0.03	$0.04	$0.03	$0.0282	$0.04	$0.17
Interoffice Channel - Dedicated - DS0 - 56 kbps - Facility Termination per month	U1TD5	$17.81	21.33	$16.45	$26.95	$18.37	$20.64	$17.40	20.71	$17.74
Interoffice Channel - Dedicated - DS0 - 64kbps - per mile per month	1L5XX	$0.04	$0.03	$0.02	$0.03	$0.04	$0.03	$0.03	$0.04	$0.17
Interoffice Channel - Dedicated - DS0 - 64 kbps - Facility Termination per month	U1TD6	$17.81	21.33	$16.45	$26.95	$18.37	$20.64	$17.40	20.71	$17.74
Interoffice Channel - Dedicated - DS1 - per mile per month	1L5XX	$0.69	$0.60	$0.31	$0.45	$0.78	$0.66	$0.57530	$0.76	$0.35
Interoffice Channel - Dedicated - DS1 - Facility Termination per month	U1TF1	$79.69	$99.79	$63.39	$55.05	$93.40	$74.40	$71.29	$94.98	$75.83
Interoffice Channel - Dedicated - DS3 - per mile per month	1L5XX	$11.93	$10.25	$6.46	$12.06	$16.15	$13.48	$12.98	$19.14	$6.88
Interoffice Channel - Dedicated - DS3 - Facility Termination per month	U1TF3	736.6	994.83	$717.60	$1,112.02	$1,131.09	$686.84	$720.38	$904.49	$840.61
Interoffice Channel - Dedicated - STS-1 - per mile per month	1L5XX	$11.93	$10.25	$7.07	$12.06	$16.15	$13.48	$11.62	$19.14	$6.88
Interoffice Channel - Dedicated - STS-1 - Facility Termination per month	U1TFS	$733.93	$966.49	$733.72	$1,088.67	$1,114.68	$692.52	$814.72	$944.40	$838.65
DS3 Channelized System per month	MQ3	$210.87	$213.22	$202.91	$236.32	$245.84	$229.30	$226.81	$204.07	$225.59
DS3 Interface per month (DS1 COCI)	1PQE1	$4.53	$6.31	$0.67	$8.52	$7.55	$5.58	$4.61	$9.69	$3.91
DS1 Channelized System per month	MQ1	$139.58	$163.88	$137.97	$200.01	$209.87	$146.87	$177.72	$179.81	$165.21
OCU-DP(data) interface card per month (2.4-64kbs)	1D1DD	$2.61	$3.13	$1.06	$2.94	$3.12	$2.86	$2.88	$3.36	$2.46
VG interface card per month (DS0)	1D1VG	$1.26	$1.78	$2.20	$1.40	$1.62	$1.45	$1.64	$1.93	$1.25
NRC - All Existing UNE Combination "Switch As Is" Conversion Charge										
NRC - "Switch As Is" Conversion Charge - 1st	UNCCC	$54.03	$63.73	$71.04	$54.09	$54.23	$54.09	$114.00	$54.26	$54.13
NRC - "Switch As Is" Conversion Charge - Add'l	UNCCC	$32.11	$33.10	$39.60	$32.16	$32.24	$32.16	$32.10	$32.25	$32.17
(NRC rates above, if not ordered, are subject to true-up.)										
Enhanced Extended Link ("EEL")										
2-wire VG Loop/DS1 Interoffice Channel - Dedicated Transport EEL										
2-wire VG Loop per month, statewide	MQ3	$22.43	$17.00	$17.89	$23.35	$22.84	$25.05	$15.88	$26.25	$26.02
2-wire VG Loop per month, Zone 1 (Note 1)	TBD	NA	NA	$15.40	NA	NA	NA	NA	NA	NA
2-wire VG Loop per month, Zone 2 (Note 1)	TBD	NA	NA	$17.78	NA	NA	NA	NA	NA	NA
2-wire VG Loop per month, Zone 3 (Note 1)	TBD	NA	NA	$28.26	NA	NA	NA	NA	NA	NA
2-wire VG Loop per month, Zone 4 (Note 1)	TBD	NA	NA	NA	NA	NA	NA	NA	NA	NA
DS1 Interoffice Channel - Dedicated Transport EEL - Per Mile per month	1L5XX	$0.69	$0.60	$0.31	$0.45	$0.78	$0.66	$0.5753	$0.76	$0.35
DS1 Interoffice Channel - Dedicated Transport EEL - Facility Termination per month	U1TF1	$79.69	$99.79	$63.39	$55.05	$93.40	$74.40	$71.29	$94.98	$75.83
DS1 Channelization System per system per month	MQ1	$139.58	$163.88	$137.97	$200.01	$209.87	$146.87	$177.72	$179.81	$165.21
DS1 Channelization Interface -VG per month	1PQE1	$4.53	$6.31	$2.20	$8.52	$7.55	$5.58	$4.61	$9.69	$3.91
NRC - Switch As Is - EEL- 1st	UNCCC	$14.37	$16.86	$12.97	$16.86	$12.70	$15.41	$16.86	$28.87	$16.86
NRC - Switch As Is - EEL - Add'l	UNCCC	$13.33	$15.48	$11.27	$15.48	$11.10	$13.33	$15.48	$28.35	$15.48
NRC - Switch As Is - EEL - Disconnect - 1st	UNCCC	$15.21	$13.92	$12.61	$13.92	$12.66	$15.21	$13.92	TBA	$13.92
NRC - Switch As Is - EEL - Disconnect - Add'l	UNCCC	$15.21	$13.92	$12.61	$13.92	$12.66	$15.21	$13.92	TBA	$13.92
NRC - Switch As Is - EEL - Manual vs. Elect - 1st	SOMAC	$56.43	$51.31	$45.46	$51.31	$42.70	$55.41	$51.31	$56.54	$51.31
NRC - Switch As Is - EEL- Manual vs. Elect - Add'l	SOMAC	$19.15	$17.56	$15.72	$17.56	$14.77	$19.16	$17.56	$19.02	$17.56
INTERIM NRCs FOR *NEW* EEL SUBJECT TO TRUE-UP:			**Orlando, Miami, Ft Laud FL**			**New Orleans LA**		**Greensboro Charlotte NC**		**NashvilleTN**
NRC - 2-wire VG Loop - 1st	SOMAC	NA	$195.00	$157.33	NA	$190.74	NA	$57.99	NA	$247.97
NRC - 2-wire VG Loop - Add'l	SOMAC	NA	$97.00	$120.74	NA	$134.43	NA	$42.37	NA	$195.72
NRC - Interoffice Channel - DS1- Facility Termination - 1st	SOMAC	NA	$45.91	$166.01	NA	$186.69	NA	$217.17	NA	$195.68

DESCRIPTION	USOC	AL	FL	GA	KY	LA	MS	NC	SC	TN
NRC - Interoffice Channel - DS1- Facility Termination - Add'l	SOMAC	NA	$44.18	$130.69	NA	$149.23	NA	$163.75	NA	$156.47
NRC - DS1 Channelization System - 1st	SOMAC	NA	$235.06	$240.96	NA	$220.07	NA	$301.74	NA	$222.87
NRC - DS1 Channelization System - Add'l	SOMAC	NA	$142.56	$148.03	NA	$135.20	NA	$182.57	NA	$135.80
NRC - DS1 Channelization System - VG Interface - 1st	SOMAC	NA	$13.39	$13.45	NA	$12.29	NA	$15.76	NA	$12.61
NRC - DS1 Channelization System - VG Interface - Add'l	SOMAC	NA	$9.59	$9.63	NA	$8.80	NA	$11.28	NA	$9.03
4-wire VG Loop/DS1 Interoffice Channel - Dedicated Transport EEL										
4-wire VG Loop, per month, statewide	UEAL4	$30.00	$30.00	$26.58	NA	$31.52	$30.55	$27.49	$35.86	$18.00
4-wire VG Loop, per month, Zone 1 (Note 1)	TBD	NA	NA	$22.88	NA	NA	NA	NA	NA	NA
4-wire VG Loop, per month, Zone 2 (Note 1)	TBD	NA	NA	$26.42	NA	NA	NA	NA	NA	NA
4-wire VG Loop, per month, Zone 3 (Note 1)	TBD	NA	NA	$41.99	NA	NA	NA	NA	NA	NA
4-wire VG Loop, per month, Zone 4 (Note 1)	TBD	NA	NA	NA	NA	NA	NA	NA	NA	NA
DS1 Interoffice Channel - Dedicated Transport EEL - Per Mile per month	1L5XX	$0.69	$0.60	$0.31	$0.45	$0.78	$0.66	$0.5753	$0.76	$0.35
DS1 Interoffice Channel - Dedicated Transport EEL - Facility Termination per month	U1TF1	$79.69	$99.79	$63.39	$55.05	$93.40	$74.40	$71.29	$94.98	$75.83
DS1 Channelization System per system per month	MQ1	$139.58	$163.88	$137.97	$200.01	$209.87	$146.87	$177.72	$179.81	$165.21
DS1 Channelization Interface -VG per month	1D1VG	$1.26	$1.78	$2.20	$1.40	$1.62	$1.45	$1.64	$1.93	$1.25
NRC - Switch As Is - EEL- 1st	UNCCC	$14.37	$16.86	$12.97	$16.86	$12.70	$15.41	$16.86	$28.87	$16.86
NRC - Switch As Is - EEL - Add'l	UNCCC	$13.33	$15.48	$11.27	$15.48	$11.10	$13.33	$15.48	$28.35	$15.48
NRC - Switch As Is - EEL - Disconnect - 1st	UNCCC	$15.21	$13.92	$12.61	$13.92	$12.66	$15.21	$13.92	TBA	$13.92
NRC - Switch As Is - EEL - Disconnect - Add'l	UNCCC	$15.21	$13.92	$12.61	$13.92	$12.66	$15.21	$13.92	TBA	$13.92
NRC - Switch As Is - EEL - Manual vs. Elect - 1st	SOMAC	$56.43	$51.31	$45.46	$51.31	$42.70	$55.41	$51.31	$56.54	$51.31
NRC - Switch As Is - EEL- Manual vs. Elect - Add'l	SOMAC	$19.15	$17.56	$15.72	$17.56	$14.77	$19.16	$17.56	$19.02	$17.56
INTERIM NRCs FOR *NEW* EEL SUBJECT TO TRUE-UP:			**Orlando, Miami, Ft Laud FL**			**New Orleans LA**		**Greensboro Charlotte NC**		**NashvilleTN**
NRC 4-wireVG Loop - 1st	SOMAC	NA	$141.00	$260.11	NA	$334.69	NA	$288.47	NA	$113.50
NRC 4-wireVG Loop - Add'l	SOMAC	NA	$43.00	$213.21	NA	$243.53	NA	$237.45	NA	$86.00
NRC - DS1 - Interoffice Channel - Facility Termination - 1st	SOMAC	NA	$45.91	$166.01	NA	$186.69	NA	$217.17	NA	$195.68
NRC - DS1 - Interoffice Channel - Facility Termination - Add'l	SOMAC	NA	$44.18	$130.69	NA	$149.23	NA	$163.75	NA	$156.47
NRC - DS1 Channelization System - 1st	SOMAC	NA	$235.06	$240.96	NA	NA	NA	$301.74	NA	$222.87
NRC - DS1 Channelization System - Add'l	SOMAC	NA	$142.56	$148.03	NA	NA	NA	$182.57	NA	$135.80
NRC - DS1 Channelization System - Interface VG - 1st	SOMAC	NA	$13.39	$13.45	NA	$12.29	NA	$15.76	NA	$12.61
NRC - DS1 Channelization System - Interface VG - Add'l	SOMAC	NA	$9.59	$9.63	NA	$8.80	NA	$11.28	NA	$9.03
4-wire 56 kbps Loop/DS1 Interoffice Channel - Dedicated Transport EEL										
4-wire 56 kbps Loop, per month, statewide	UNCD5	$34.15	$48.33	$30.72	NA	$35.58	$34.95	$32.67	$41.70	$42.23
4-wire 56 kbps Loop, per month, Zone 1 (Note 1)	TBD	NA	NA	$26.44	NA	NA	NA	NA	NA	NA
4-wire 56 kbps Loop, per month, Zone 2 (Note 1)	TBD	NA	NA	$30.53	NA	NA	NA	NA	NA	NA
4-wire 56 kbps Loop, per month, Zone 3 (Note 1)	TBD	NA	NA	$48.53	NA	NA	NA	NA	NA	NA
4-wire 56 kbps Loop, per month, Zone 4 (Note 1)	TBD	NA	NA	NA	NA	NA	NA	NA	NA	NA
DS1 Interoffice Channel - Dedicated Transport EEL - Per Mile per month	1L5XX	$0.69	$0.60	$0.31	$0.45	$0.78	$0.66	$0.5753	$0.76	$0.35
DS1 Interoffice Channel - Dedicated Transport EEL - Facility Termination per month	UNCB1	$79.69	$99.79	$63.39	$55.05	$93.40	$74.40	$71.29	$94.98	$75.83
DS1 Channelization System per system per month	UNCN1	$139.58	$163.88	$137.97	$200.01	$209.87	$146.87	$177.72	$179.81	$165.21
DS1 Channelization Interface - OCU-DP per month	UNC1D	$4.53	$6.31	$2.20	$8.52	$7.55	$5.58	$4.61	$9.69	$3.91
NRC - Switch As Is - EEL- 1st	UNCCC	$14.37	$16.86	$12.97	$16.86	$12.70	$15.41	$16.86	$28.87	$16.86
NRC - Switch As Is - EEL - Add'l	UNCCC	$13.33	$15.48	$11.27	$15.48	$11.10	$13.33	$15.48	$28.35	$15.48
NRC - Switch As Is - EEL - Disconnect - 1st	UNCCC	$15.21	$13.92	$12.61	$13.92	$12.66	$15.21	$13.92	TBA	$13.92
NRC - Switch As Is - EEL - Disconnect - Add'l	UNCCC	$15.21	$13.92	$12.61	$13.92	$12.66	$15.21	$13.92	TBA	$13.92
NRC - Switch As Is - EEL - Manual vs. Elect - 1st	SOMAC	$56.43	$51.31	$45.46	$51.31	$42.70	$55.41	$51.31	$56.54	$51.31
NRC - Switch As Is - EEL- Manual vs. Elect - Add'l	SOMAC	$19.15	$17.56	$15.72	$17.56	$14.77	$19.16	$17.56	$19.02	$17.56
INTERIM NRCs FOR *NEW* EEL SUBJECT TO TRUE-UP:			**Orlando, Miami, Ft Laud FL**			**New Orleans LA**		**Greensboro Charlotte NC**		**NashvilleTN**
NRC - 4-wire 56 kbps Loop - 1st	SOMAC	NA	$709.72	$401.71	NA	$483.59	NA	$489.04	NA	$698.42
NRC - 4-wire 56 kbps Loop - Add'l	SOMAC	NA	$483.45	$283.84	NA	$315.57	NA	$337.51	NA	NA
NRC - DS-1 Interoffice Channel - Facility Termination - 1st	SOMAC	NA	$45.91	$166.01	NA	$186.69	NA	$217.17	NA	$195.68

DESCRIPTION	USOC	AL	FL	GA	KY	LA	MS	NC	SC	TN
NRC - DS-1 Interoffice Channel - Facility Termination - Add'l	SOMAC	NA	$44.18	$130.69	NA	$149.23	NA	$163.75	NA	$156.47
NRC- New - DS1 Channelization System										
NRC - DS1 Channelization System - 1st	SOMAC	NA	$238.43	$302.82	NA	$297.96	NA	$338.55	NA	$222.87
NRC - DS1 Channelization System - Add'l	SOMAC	NA	$145.55	$184.20	NA	$181.39	NA	$200.06	NA	$135.80
NRC - DS1 Channelization Interface OCU-DP card per month(2.4-64kbps) - 1st	SOMAC	NA	$13.39	$13.45	NA	$12.29	NA	$15.76	NA	$12.61
NRC - DS1 Channelization Interface OCU-DP card per month(2.4-64kbps) - Add'l	SOMAC	NA	$9.59	$9.63	NA	$8.80	NA	$11.28	NA	$9.03
4-wire 64 kbps Loop/DS1 Interoffice Channel - Dedicated Transport EEL										
4-wire 64 kbps Loop, per month, statewide	UDL64	$34.15	$48.33	$30.72	NA	$35.58	$34.95	$32.67	$41.70	$42.23
4-wire 64 kbps Loop, per month, Zone 1 (Note 1)	TBD	NA	NA	$26.44	NA	NA	NA	NA	NA	NA
4-wire 64 kbps Loop, per month, Zone 2 (Note 1)	TBD	NA	NA	$30.53	NA	NA	NA	NA	NA	NA
4-wire 64 kbps Loop, per month, Zone 3 (Note 1)	TBD	NA	NA	$48.53	NA	NA	NA	NA	NA	NA
4-wire 64 kbps Loop, per month, Zone 4 (Note 1)	TBD	NA	NA	NA	NA	NA	NA	NA	NA	NA
DS1 Interoffice Channel - Dedicated Transport EEL - Per Mile per month	1L5XX	$0.69	$0.60	$0.31	$0.45	$0.78	$0.66	$0.5753	$0.76	$0.35
DS1 Interoffice Channel - Dedicated Transport EEL - Facility Termination per month	U1TF1	$79.69	$99.79	$63.39	$55.05	$93.40	$74.40	$71.29	$94.98	$75.83
DS1 Channelization System per system per month	MQ1	$139.58	$163.88	$137.97	$200.01	$209.87	$146.87	$177.72	$179.81	$165.21
DS1 Channelization Interface - OCU-DP per month	1D1DD	$2.61	$3.13	$1.06	$2.94	$3.12	$2.86	$2.88	$3.36	$2.46
NRC - Switch As Is - EEL- 1st	UNCCC	$14.37	$16.86	$12.97	$16.86	$12.70	$15.41	$16.86	$28.87	$16.86
NRC - Switch As Is - EEL - Add'l	UNCCC	$13.33	$15.48	$11.27	$15.48	$11.10	$13.33	$15.48	$28.35	$15.48
NRC - Switch As Is - EEL - Disconnect - 1st	UNCCC	$15.21	$13.92	$12.61	$13.92	$12.66	$15.21	$13.92	TBA	$13.92
NRC - Switch As Is - EEL - Disconnect - Add'l	UNCCC	$15.21	$13.92	$12.61	$13.92	$12.66	$15.21	$13.92	TBA	$13.92
NRC - Switch As Is - EEL - Manual vs. Elect - 1st	SOMAC	$56.43	$51.31	$45.46	$51.31	$42.70	$55.41	$51.31	$56.54	$51.31
NRC - Switch As Is - EEL- Manual vs. Elect - Add'l	SOMAC	$19.15	$17.56	$15.72	$17.56	$14.77	$19.16	$17.56	$19.02	$17.56
INTERIM NRCs FOR *NEW* EEL SUBJECT TO TRUE-UP:			**Orlando, Miami, Ft Laud FL**			**New Orleans LA**		**Greensboro Charlotte NC**		**NashvilleTN**
NRC - 4-wire 64 kbps Loop - 1st	SOMAC	NA	$709.72	$401.71	NA	$483.59	NA	$489.04	NA	$698.42
NRC - 4-wire 64 kbps Loop - Add'l	SOMAC	NA	$483.45	$283.84	NA	$315.57	NA	$337.51	NA	NA
NRC - DS1- Interoffice Channel - Facility Termination - 1st	SOMAC	NA	$45.91	$166.01	NA	$186.69	NA	$217.17	NA	$195.68
NRC - DS1- Interoffice Channel - Facility Termination - Add'l	SOMAC	NA	$44.18	$130.69	NA	$149.23	NA	$163.75	NA	$156.47
NRC - DS1 Channelization System - 1st	SOMAC	NA	$238.43	$331.77	NA	$297.96	NA	$338.55	NA	$222.87
NRC - DS1 Channelization System - Add'l	SOMAC	NA	$145.55	$202.63	NA	$181.39	NA	$200.06	NA	$135.80
NRC - DS1 Channelization Sys. Interface OCU-DP card per month(2.4-64kbps) - 1s	SOMAC	NA	$13.39	$13.45	NA	$12.29	NA	$15.76	NA	$12.61
NRC - DS1 Channelization Sys. Interface OCU-DP card per month(2.4-64kbps) - A	SOMAC	NA	$9.59	$9.63	NA	$8.80	NA	$11.28	NA	$9.03
2-wire VG Local Channel/DS1 Interoffice Channel - Dedicated Transport EEL										
2-wire VG Local Channel per month	ULDV2	$14.61	$18.02	$16.28	$22.26	$14.94	$17.83	$14.82	$16.83	$19.02
DS1 Interoffice Channel - Dedicated Transport EEL - Per Mile per month	1L5XX	$0.69	$0.60	$0.31	$0.45	$0.78	$0.66	$0.5753	$0.76	$0.35
DS1 Interoffice Channel - Dedicated Transport EEL - Facility Termination per month	U1TF1	$79.69	$99.79	$63.39	$55.05	$93.40	$74.40	$71.29	$94.98	$75.83
DS1 Channelization System per system per month	MQ1	$139.58	$163.88	$137.97	$200.01	$209.87	$146.87	$177.72	$179.81	$165.21
DS1 Channelization Interface -VG per month	1D1VG	$1.26	$1.78	$2.20	$1.40	$1.62	$1.45	$1.64	$1.93	$1.25
NRC - Switch As Is - EEL- 1st	UNCCC	$14.37	$16.86	$12.97	$16.86	$12.70	$15.41	$16.86	$28.87	$16.86
NRC - Switch As Is - EEL - Add'l	UNCCC	$13.33	$15.48	$11.27	$15.48	$11.10	$13.33	$15.48	$28.35	$15.48
NRC - Switch As Is - EEL - Disconnect - 1st	UNCCC	$15.21	$13.92	$12.61	$13.92	$12.66	$15.21	$13.92	TBA	$13.92
NRC - Switch As Is - EEL - Disconnect - Add'l	UNCCC	$15.21	$13.92	$12.61	$13.92	$12.66	$15.21	$13.92	TBA	$13.92
NRC - Switch As Is - EEL - Manual vs. Elect - 1st	SOMAC	$56.43	$51.31	$45.46	$51.31	$42.70	$55.41	$51.31	$56.54	$51.31
NRC - Switch As Is - EEL- Manual vs. Elect - Add'l	SOMAC	$19.15	$17.56	$15.72	$17.56	$14.77	$19.16	$17.56	$19.02	$17.56
INTERIM NRCs FOR *NEW* EEL SUBJECT TO TRUE-UP:			**Orlando, Miami, Ft Laud FL**			**New Orleans LA**		**Greensboro Charlotte NC**		**NashvilleTN**
NRC - 2-wire VG - Local Channel - 1st	SOMAC	NA	$477.33	$401.69	NA	$430.71	NA	$553.80	NA	$287.79
NRC - 2-wire VG - Local Channel - Add'l	SOMAC	NA	$124.32	$70.82	NA	$74.41	NA	$86.69	NA	$39.50
NRC - DS1 - Facility Termination - 1st	SOMAC	NA	$45.91	$166.01	NA	$186.69	NA	$217.17	NA	$195.68
NRC - DS1 - Facility Termination - Add'l	SOMAC	NA	$44.18	$130.69	NA	$149.23	NA	$163.75	NA	$156.47

DESCRIPTION	USOC	AL	FL	GA	KY	LA	MS	NC	SC	TN
NRC - DS1 Channelization System - 1st	SOMAC	NA	$235.06	$240.96	NA	$220.07	NA	$301.74	NA	$222.87
NRC - DS1 Channelization System - Add'l	SOMAC	NA	$142.56	$148.03	NA	$135.20	NA	$182.57	NA	$135.80
NRC - DS1 Channelization VG Interface - 1st	SOMAC	NA	$13.39	$13.45	NA	$12.29	NA	$15.76	NA	$12.61
NRC - DS1 Channelization VG Interface - Add'l	SOMAC	NA	$9.59	$9.63	NA	$8.80	NA	$11.28	NA	$9.03
4-wire VG Local Channel/DS1 Interoffice Channel - Dedicated Transport EEL										
4-wire VG Local Channel per month	ULDV4	$15.77	$19.01	$17.18	$23.38	$16.21	$19.03	$15.87	$18.05	$20.14
DS1 Interoffice Channel - Dedicated Transport EEL - Per Mile per month	1L5XX	$0.69	$0.60	$0.31	$0.45	$0.78	$0.66	$0.5753	$0.76	$0.35
DS1 Interoffice Channel - Dedicated Transport EEL - Facility Termination per month	U1TF1	$79.69	$99.79	$63.39	$55.05	$93.40	$74.40	$71.29	$94.98	$75.83
DS1 Channelization System per system per month	MQ1	$139.58	$163.88	$137.97	$200.01	$209.87	$146.87	$177.72	$179.81	$165.21
DS1 Channelization Interface -VG per month	1D1VG	$4.53	$6.31	$2.20	$8.52	$7.55	$5.58	$4.61	$9.69	$3.91
NRC - Switch As Is - EEL- 1st	UNCCC	$14.37	$16.86	$12.97	$16.86	$12.70	$15.41	$16.86	$28.87	$16.86
NRC - Switch As Is - EEL - Add'l	UNCCC	$13.33	$15.48	$11.27	$15.48	$11.10	$13.33	$15.48	$28.35	$15.48
NRC - Switch As Is - EEL - Disconnect - 1st	UNCCC	$15.21	$13.92	$12.61	$13.92	$12.66	$15.21	$13.92	TBA	$13.92
NRC - Switch As Is - EEL - Disconnect - Add'l	UNCCC	$15.21	$13.92	$12.61	$13.92	$12.66	$15.21	$13.92	TBA	$13.92
NRC - Switch As Is - EEL - Manual vs. Elect - 1st	SOMAC	$56.43	$51.31	$45.46	$51.31	$42.70	$55.41	$51.31	$56.54	$51.31
NRC - Switch As Is - EEL- Manual vs. Elect - Add'l	SOMAC	$19.15	$17.56	$15.72	$17.56	$14.77	$19.16	$17.56	$19.02	$17.56
INTERIM NRCs FOR *NEW* EEL SUBJECT TO TRUE-UP:			**Orlando, Miami, Ft Laud FL**			**New Orleans LA**		**Greensboro Charlotte NC**		**NashvilleTN**
NRC - 4-wire Local Channel - VG - 1st	SOMAC	NA	$77.33	$387.38	NA	$433.31	NA	$562.23	NA	$287.94
NRC - 4-wire Local Channel - VG - Add'l	SOMAC	NA	$124.32	$72.47	NA	$88.07	NA	$92.67	NA	$54.18
NRC - DS1 - Facility Termination - 1st	SOMAC	NA	$45.91	$166.01	NA	$186.69	NA	$217.17	NA	$195.68
NRC - DS1 - Facility Termination - Add'l	SOMAC	NA	$44.18	$130.69	NA	$149.23	NA	$163.75	NA	$156.47
NRC - DS1 Channelization System - 1st	SOMAC	NA	$235.06	$240.96	NA	$220.07	NA	$301.74	NA	$222.87
NRC - DS1 Channelization System - Add'l	SOMAC	NA	$142.56	$148.03	NA	$135.20	NA	$182.57	NA	$135.80
NRC - DS1 Channelization System Interface VG - 1st	SOMAC	NA	$13.39	$13.45	NA	$12.29	NA	$15.76	NA	$12.61
NRC - DS1 Channelization System Interface - Add'l	SOMAC	NA	$9.59	$9.63	NA	$8.80	NA	$11.28	NA	$9.03
DS1 Loop/DS1 Interoffice Channel - Dedicated Transport EEL										
DS1 Loop, per month, statewide	USLXX	$64.65	$80.00	$60.88	$67.96	$72.86	$69.59	$62.78	$72.55	TBD
DS1 Loop, per month, Zone 1 (Note 1)	TBD	NA	NA	$52.40	NA	NA	NA	NA	NA	NA
DS1 Loop, per month, Zone 2 (Note 1)	TBD	NA	NA	$60.51	NA	NA	NA	NA	NA	NA
DS1 Loop, per month, Zone 3 (Note 1)	TBD	NA	NA	$96.18	NA	NA	NA	NA	NA	NA
DS1 Loop, per month, Zone 4 (Note 1)	TBD	NA	NA	NA	NA	NA	NA	NA	NA	NA
DS1 Interoffice Channel - Dedicated Transport EEL - Per Mile per month	1L5XX	$0.69	$0.60	$0.31	$0.45	$0.78	$0.66	$0.5753	$0.76	$0.35
DS1 Interoffice Channel - Dedicated Transport EEL - Facility Termination per month	U1TF1	$79.69	$99.79	$63.39	$55.05	$93.40	$74.40	$71.29	$94.98	$75.83
NRC - Switch As Is - EEL- 1st	UNCCC	$14.37	$16.86	$12.97	$16.86	$12.70	$15.41	$16.86	$28.87	$16.86
NRC - Switch As Is - EEL - Add'l	UNCCC	$13.33	$15.48	$11.27	$15.48	$11.10	$13.33	$15.48	$28.35	$15.48
NRC - Switch As Is - EEL - Disconnect - 1st	UNCCC	$15.21	$13.92	$12.61	$13.92	$12.66	$15.21	$13.92	TBA	$13.92
NRC - Switch As Is - EEL - Disconnect - Add'l	UNCCC	$15.21	$13.92	$12.61	$13.92	$12.66	$15.21	$13.92	TBA	$13.92
NRC - Switch As Is - EEL - Manual vs. Elect - 1st	SOMAC	$56.43	$51.31	$45.46	$51.31	$42.70	$55.41	$51.31	$56.54	$51.31
NRC - Switch As Is - EEL- Manual vs. Elect - Add'l	SOMAC	$19.15	$17.56	$15.72	$17.56	$14.77	$19.16	$17.56	$19.02	$17.56
INTERIM NRCs FOR *NEW* EEL SUBJECT TO TRUE-UP:			**Orlando, Miami, Ft Laud FL**			**New Orleans LA**		**Greensboro Charlotte NC**		**NashvilleTN**
NRC - DS1 Loop - 1st	SOMAC	NA	NA	$448.92	NA	NA	NA	$714.84	NA	NA
NRC - DS1 Loop - Add'l	SOMAC	NA	NA	$276.60	NA	NA	NA	$421.47	NA	NA
NRC - DS1 Interoffice Channel - Facility Termination - 1st	SOMAC	NA	$45.91	$166.01	NA	$186.69	NA	$217.17	NA	$195.68
NRC - DS1Interoffice Channel - Facility Termination - Add'l	SOMAC	NA	$44.18	$130.69	NA	$149.23	NA	$163.75	NA	$156.47
DS1 Loop/DS3 Interoffice Channel - Dedicated Transport EEL										
DS1 Loop, per month, statewide	USLXX	$64.65	$80.00	$60.88	$67.96	$72.86	$69.59	$62.78	$72.55	TBD
DS1 Loop, per month, Zone 1 (Note 1)	TBD	NA	NA	$52.40	NA	NA	NA	NA	NA	NA
DS1 Loop, per month, Zone 2 (Note 1)	TBD	NA	NA	$60.51	NA	NA	NA	NA	NA	NA
DS1 Loop, per month, Zone 3 (Note 1)	TBD	NA	NA	$96.18	NA	NA	NA	NA	NA	NA
DS1 Loop, per month, Zone 4 (Note 1)	TBD	NA	NA	NA	NA	NA	NA	NA	NA	NA

DESCRIPTION	USOC	AL	FL	GA	KY	LA	MS	NC	SC	TN
DS3 Interoffice Channel - Dedicated Transport EEL - Per Mile per month	1L5XX	$11.93	$10.25	$6.46	$12.06	$16.15	$13.48	$12.98	$19.14	$6.88
DS3 Interoffice Channel - Dedicated Transport EEL - Facility Termination per month	U1TF3	736.6	994.83	$717.60	$1,112.02	$1,131.09	$686.84	$720.38	$904.49	$840.61
DS3 Channelization System per system per month	MQ3	$210.87	$213.22	$202.91	$236.32	$245.84	$229.30	$226.81	$204.07	$225.59
DS3 Channelization Interface -DS1 per month	1PQE1	$4.53	$6.31	$0.67	$8.52	$7.55	$5.58	$4.61	$9.69	$3.91
NRC - Switch As Is - EEL- 1st	UNCCC	$14.37	$16.86	$12.97	$16.86	$12.70	$15.41	$16.86	$28.87	$16.86
NRC - Switch As Is - EEL - Add'l	UNCCC	$13.33	$15.48	$11.27	$15.48	$11.10	$13.33	$15.48	$28.35	$15.48
NRC - Switch As Is - EEL - Disconnect - 1st	UNCCC	$15.21	$13.92	$12.61	$13.92	$12.66	$15.21	$13.92	TBA	$13.92
NRC - Switch As Is - EEL - Disconnect - Add'l	UNCCC	$15.21	$13.92	$12.61	$13.92	$12.66	$15.21	$13.92	TBA	$13.92
NRC - Switch As Is - EEL - Manual vs. Elect - 1st	SOMAC	$56.43	$51.31	$45.46	$51.31	$42.70	$55.41	$51.31	$56.54	$51.31
NRC - Switch As Is - EEL- Manual vs. Elect - Add'l	SOMAC	$19.15	$17.56	$15.72	$17.56	$14.77	$19.16	$17.56	$19.02	$17.56
INTERIM NRCs FOR *NEW* EEL SUBJECT TO TRUE-UP:			**Orlando, Miami, Ft Laud FL**			**New Orleans LA**		**Greensboro Charlotte NC**		**NashvilleTN**
NRC - DS1 Loop - 1st	SOMAC	NA	NA	$53.46	NA	NA	NA	$714.84	NA	NA
NRC - DS1 Loop - Add'l	SOMAC	NA	NA	$319.54	NA	NA	NA	$421.47	NA	NA
NRC - DS3 - Interoffice Channel - Facility Termination - 1st	SOMAC	NA	$879.42	$959.44	NA	$882.49	NA	$794.94	NA	$905.50
NRC - DS3 - Interoffice Channel - Facility Termination - Add'l	SOMAC	NA	$542.41	$623.26	NA	$573.28	NA	$579.55	NA	$565.26
NRC - DS3 Channelization System - 1st	SOMAC	NA	$408.24	$453.17	NA	$413.85	NA	$428.07	NA	$423.18
NRC - DS3 Channelization System - Add'l	SOMAC	NA	$301.27	$320.09	NA	$292.33	NA	$298.37	NA	$298.48
NRC - DS3 Channelization System DS1 Interface - 1st	SOMAC	NA	$13.39	$13.45	NA	$12.29	NA	$15.76	NA	$12.61
NRC - DS3 Channelization System DS1 Interface - Add'l	SOMAC	NA	$9.59	$9.63	NA	$8.80	NA	$11.28	NA	$9.03
DS-1 Local Channel/ DS-3 Interoffice Channel - Dedicated Transport EEL										
DS1 Local Channel per month	TMECS	$35.52	$44.35	$38.57	$43.80	$43.80	$38.91	$35.68	$37.20	$40.27
DS3 Interoffice Channel - Dedicated Transport EEL - Per Mile per month	1L5XX	$11.93	$10.25	$6.46	$12.06	$16.15	$13.48	$12.98	$19.14	$6.88
DS3 Interoffice Channel - Dedicated Transport EEL - Facility Termination per month	U1TF3	$736.60	$994.83	$717.60	$1,112.02	$1,131.09	$686.84	$720.38	$904.49	$840.61
DS3 Channelization System per system per month	MQ3	$210.87	$213.22	$202.91	$2.94	$3.12	$2.86	$2.88	$3.36	$2.46
DS3 Channelization Interface -DS1 per month	1PQE1	$4.53	$6.31	$0.67	$1.40	$1.62	$1.45	$1.64	$1.93	$1.25
NRC - Switch As Is - EEL- 1st	UNCCC	$14.37	$16.86	$12.97	$16.86	$12.70	$15.41	$16.86	$28.87	$16.86
NRC - Switch As Is - EEL - Add'l	UNCCC	$13.33	$15.48	$11.27	$15.48	$11.10	$13.33	$15.48	$28.35	$15.48
NRC - Switch As Is - EEL - Disconnect - 1st	UNCCC	$15.21	$13.92	$12.61	$13.92	$12.66	$15.21	$13.92	TBA	$13.92
NRC - Switch As Is - EEL - Disconnect - Add'l	UNCCC	$15.21	$13.92	$12.61	$13.92	$12.66	$15.21	$13.92	TBA	$13.92
NRC - Switch As Is - EEL - Manual vs. Elect - 1st	SOMAC	$56.43	$51.31	$45.46	$51.31	$42.70	$55.41	$51.31	$56.54	$51.31
NRC - Switch As Is - EEL- Manual vs. Elect - Add'l	SOMAC	$19.15	$17.56	$15.72	$17.56	$14.77	$19.16	$17.56	$19.02	$17.56
INTERIM NRCs FOR *NEW* EEL SUBJECT TO TRUE-UP:			**Orlando, Miami, Ft Laud FL**			**New Orleans LA**		**Greensboro Charlotte NC**		**NashvilleTN**
NRC -DS1 Local Channel - 1st	SOMAC	NA	$246.50	$400.37	NA	$434.53	NA	$534.48	NA	$377.96
NRC -DS1 Local Channel - Add'l	SOMAC	NA	$230.49	$312.89	NA	$341.09	NA	$462.69	NA	$277.31
NRC- DS3 Interoffice Channel - Facility Termination - 1st	SOMAC	NA	$884.71	977.44	NA	982.64	NA	$794.94	NA	980.45
NRC- DS3 Interoffice Channel - Facility Termination - Add'l	SOMAC	NA	$552.81	641.1	NA	644.52	NA	$579.55	NA	643.07
NRC - DS3 Channelization System - 1st	SOMAC	NA	$344.18	$386.41	NA	$352.89	NA	$476.24	NA	$362.09
NRC - DS3 Channelization System - Add'l	SOMAC	NA	$248.67	$264.84	NA	$241.87	NA	$321.89	NA	$248.17
NRC - DS3 Channelization System DS1 Interface - 1st	SOMAC	NA	$13.39	$13.45	NA	$12.29	NA	$15.76	NA	$12.61
NRC - DS3 Channelization System DS1 Interface - Add'l	SOMAC	NA	$9.59	$9.63	NA	$8.80	NA	$11.28	NA	$9.03

Notes:

1 Deaveraged zone rates will be available May 1, 2000.

DESCRIPTION	USOC	AL	FL	GA	KY	LA	MS	NC	SC	TN
Operational Support Systems										
RC - OSS OLEC Daily Usage File: Recording, Per Message	TBD	$0.0002	$0.008	$0.0001275	$0.0008611	$0.00019	$0.0001179	$0.0003	$0.0002862	$0.008
RC- OSS OLEC Daily Usage File: Message Processing, Per Message	TBD	$0.0033	$0.004	$0.0062548	$0.0032357	$0.0024	$0.0032089	$0.0032	$0.0032344	$0.004
RC - OSS OLEC Daily Usage File: Message Distribution, Per Magnetic Tape	TBD	$55.19	$54.95	$28.25	$55.68	$47.3000	$54.62	$54.61	$54.72	$54.95
RC - OSS OLEC Daily Usage File: Data Transmission (CONNECT:DIRECT), Per	TBD	$0.00004	$0.001	$0.0000434	$0.0000365	$0.0000300	$0.0000354	$0.00004	$0.0000357	$0.001
Access Daily Usage File (ADUF)										
RC - ADUF, Message Processing, per message	TBD	$0.004	$0.004	$0.0136327	$0.004	$0.004	$0.004	$0.004	$0.004	$0.004
RC - ADUF, Message Distribution, per Magnetice Tape provisioned	TBD	$54.95	$54.95	$28.85	$54.95	$54.95	$54.95	$54.95	$54.95	$54.95
RC - ADUF, Data Transmision (CONNECT:DIRECT), per message	TBD	$0.001	$0.001	$0.0000434	$0.001	$0.001	$0.001	$0.001	$0.001	$0.001
Enhanced Optional Daily Usage File (EODUF)										
Enhanced Optional Daily Usage File: Message Processing , Per Message	TBD	$0.004	$0.004	$0.0034555	$0.004	$0.004	$0.004	$0.004	$0.004	$0.004
Enhanced Optional Daily Usage File: Message Processing, per magnetic tape	TBD	$47.30	$47.30	$47.30	$47.30	$47.30	$47.30	$47.30	$47.30	$47.30
Enhanced Optional Daily Usage File: Data Transmision (CONNECT:DIRECT), per	TBD	$0.0000364	$0.0000364	NA	$0.0000364	$0.0000364	$0.0000364	$0.0000364	$0.0000364	$0.0000364
SWA 8XX Toll Free Dialing Ten Digit Screening Service (Note 1)			TBD							
8XX Access Ten Digit Screening (all types), per call (Note 2)	N/A	$0.0005	NA	$0.0004868	NA	$0.0005305	$0.0005321	$0.00050	$0.0005227	NA
8XX Access Ten Digit Screening Svc. W/8XX No. Delivery										
per query	N/A	NA	NA	NA	$0.0010	NA	NA	$0.00365	NA	$0.004
for 8XX Numbers, with Optional Complex Features, per query	N/A	NA	NA	NA	$0.0011	NA	NA	$0.00431	NA	$0.004
8XX Access Ten Digit Screening Svc. W/POTS No. Delivery										
per query	N/A	NA	NA	NA	$0.0010	NA	NA	$0.00383	NA	$0.004
with Optional Complex Features, per query	N/A	NA	NA	NA	$0.0011	NA	NA	$0.00431	NA	$0.004
8XX Access Ten Digit Screening Svc. W/800 No. Delivery										
per message	N/A	NA	NA	NA	NA	NA	NA	NA	NA	NA
for 8XX Numbers, w/Optional Complex Features, per message	N/A	NA	NA	NA	NA	NA	NA	NA	NA	NA
8XX Access Ten Digit Screening Svc. W/POTS No. Delivery										
per message	N/A	NA	NA	NA	NA	NA	NA	NA	NA	NA
with Optional Complex Features, per message	N/A	NA	NA	NA	NA	NA	NA	NA	NA	NA
Reservation Charge per 8XX number reserved										
NRC - 1st	N8R1X	$7.13	NA	$6.57	$10.05	$6.29	$8.46	$7.05	$6.38	$30.00
NRC - Addl'l	N8R1X	$0.97	NA	$0.76	$1.19	$0.73	$0.96	$0.96	$0.9583	$0.50
NRC - Incremental Charge - Manual Service Order - 1st	SOMAN	$27.37	NA	$18.94	NA	$18.14	$25.52	$26.94	$27.84	NA
NRC - Incremental Charge - Manual Service Order - Add'l	SOMAN	NA	NA	NA	NA	NA	NA	NA	NA	NA
Per 8XX # Established w/o POTS (w/8XX No.) Translations										
NRC - 1st	N/A	$15.88	NA	$12.81	$30.59	$12.27	$17.04	$23.82	$22.63	$67.50
NRC - Addl'l	N/A	$1.97	NA	$1.45	$3.22	$1.39	$1.93	$2.73	$2.73	$1.50
NRC - Disconnect Charge - 1st	N/A	$10.04	NA	NA	NA	$8.30	$11.32	NA	$42.95	NA
NRC - Disconnect Charge - Add'l	N/A	$0.97	NA	NA	NA	$0.73	$0.96	NA	NA	NA
NRC - Incremental Charge - Manual Service Order - 1st	SOMAN	$27.37	NA	$18.94	NA	$18.14	$25.52	$41.35	NA	NA
NRC - Incremental Charge - Manual Service Order - Add'l	SOMAN	NA	NA	NA	NA	NA	NA	NA	NA	NA
NRC - Incremental Charge - Manual Service Order - Disconnect	SOMAN	$17.75	NA	NA	NA	$11.40	$16.05	NA	NA	NA
Per 8XX # Established with POTS Translations										
NRC - 1st	N8FTX	$15.88	NA	$12.81	$30.59	$12.27	$17.04	$23.82	$22.63	$67.50
NRC - Addl'l	N8FTX	$1.97	NA	$1.45	$3.22	$1.39	$1.93	$2.73	$2.73	$1.50
NRC - Disconnect Charge - 1st	N8FTX	$10.04	NA	NA	NA	$8.30	$11.32	NA	$42.95	NA
NRC - Disconnect Charge - Add'l	N8FTX	$0.97	NA	NA	NA	$0.73	$0.96	NA	NA	NA
NRC - Incremental Charge - Manual Service Order - 1st	SOMAN	$27.37	NA	$18.94	NA	$18.14	$25.52	$41.35	NA	NA
NRC - Incremental Charge - Manual Service Order - Add'l	SOMAN	NA	NA	NA	NA	NA	NA	NA	NA	NA
NRC - Incremental Charge - Manual Service Order - Disconnect	SOMAN	$17.75	NA	NA	NA	$11.40	$16.05	NA	NA	NA
Customized Area of Service per 8XX Number										
NRC - 1st	N8FCX	$5.69	NA	$4.46	$6.97	$4.27	$5.63	$5.63	$5.64	$3.00
NRC - Addl'l	N8FCX	$2.85	NA	$2.23	$3.49	$2.14	$2.81	$2.82	$2.82	$1.50
NRC - Incremental Charge - Manual Service Order - 1st	SOMAN	NA	NA	NA	NA	NA	NA	NA	NA	NA
NRC - Incremental Charge - Manual Service Order - Add'l	SOMAN	NA	NA	NA	NA	NA	NA	NA	NA	NA
Multiple Inter LATA Carrier Routing per Carrier Requested per 8XX #										

DESCRIPTION	USOC	AL	FL	GA	KY	LA	MS	NC	SC	TN
NRC - 1st	N8FMX	$6.66	NA	$5.22	$8.16	$5.00	$6.59	$6.59	$6.60	$3.50
NRC - Addl'l	N8FMX	$3.81	NA	$2.99	$4.67	$2.86	$3.77	$3.77	$3.78	$2.00
NRC - Incremental Charge - Manual Service Order - 1st	SOMAN	NA	NA	NA	NA	NA	NA	NA	NA	NA
NRC - Incremental Charge - Manual Service Order - Add'l	SOMAN	NA	NA	NA	NA	NA	NA	NA	NA	NA
Change Charge per request										
NRC - 1st	N8FAX	$8.10	NA	$7.33	$11.24	$7.01	$9.42	$8.01	$7.34	$48.50
NRC - Addl'l	N8FAX	$0.97	NA	$0.76	$1.19	$0.73	$0.96	$0.96	$0.9583	$0.50
NRC - Incremental Charge - Manual Service Order - 1st	SOMAN	$27.37	NA	$18.94	NA	$18.14	$25.52	$26.94	$27.84	NA
NRC - Incremental Charge - Manual Service Order - Add'l	SOMAN	NA	NA	NA	NA	NA	NA	NA	NA	NA
Call Handling and Destination Features										
NRC - 1st	N8FDX	$5.69	NA	$4.72	$6.97	$4.27	$5.63	$5.63	$5.64	$3.00
NRC - Add'l	N8FDX	NA	NA	$4.46	$6.97	$4.27	$5.63	NA	$5.64	$3.00
LINE INFORMATION DATABASE ACCESS (LIDB)										
LIDB Common Transport per query	OQT	$0.00004	$0.0003	$0.0000338	$0.00006	$0.0000418	$0.0000446	$0.0003	$0.0000442	$0.0003
LIDB Validation per query	OQU	$0.041003	$0.041003	$0.0105974	$0.00938	$0.0103774	$0.0142132	$0.013400	$0.0141003	$0.041003
LIDB Originating Point Code Establishment or Change - NRC	N/A	$64.36	NA	$50.30	$107.60	$48.17	$63.63	$91.00	$61.62	NA
NRC - Incremental Charge - Electronic Service Order	TBD	NA	NA	NA	NA	NA	NA	$62.26	NA	NA
NRC - Incremental Charge - Manual Service Order - 1st	SOMAN	$25.93	NA	$18.94	NA	$18.14	$25.52	$89.20	$27.84	$91.00
NRC - Incremental Charge - Manual Service Order - Add'l	SOMAN	NA	NA	NA	NA	NA	NA	NA	$27.84	NA
CCS7 SIGNALING TRANSPORT SERVICE										
CCS7 Signaling Connection, per link (A link) per month		$18.79	$5.00	$17.05	$16.31	$19.48	$21.58	$155.00	$21.79	$155.00
NRC		$171.98	$400.00	$131.96	$354.95	$126.34	$169.72	$510.00	$277.07	$510.00
NRC - Disconnect		$135.70	NA	NA	NA	$101.10	$134.08	NA	$42.95	NA
NRC - Incremental Charge - Manual Service Order	SOMAN	$25.93	NA	$18.94	NA	$18.14	$25.52	NA	NA	NA
NRC - Incremental Charge - Manual Service Order - Disconnect	SOMAN	$16.31	NA	NA	NA	$11.40	$16.05	NA	NA	NA
CCS7 Signaling Connection, per link (B link) (also known as D link) per month		$18.79	$5.00	$17.05	$16.31	$19.48	$21.58	$155.00	$21.79	Not available
NRC		$171.98	$400.00	$131.96	$354.95	$126.34	$169.72	$510.00	$277.07	$510.00
NRC - Disconnect		$135.70	NA	NA	NA	$101.10	$134.08	NA	$42.95	NA
NRC - Incremental Charge - Manual Service Order	SOMAN	$25.93	NA	$18.94	NA	$18.14	$25.52	NA	NA	NA
NRC - Incremental Charge - Manual Service Order - Disconnect	SOMAN	$16.31	NA	NA	NA	$11.40	$16.05	NA	NA	NA
CCS7 Signaling Termination, per STP port per month		$148.72	$113.00	$133.99	$174.08	$161.99	$161.12	$132.88	$156.33	$355.00
CCS7 Signaling Usage, per ISUP message		$0.00004	$0.00001	$0.0000354	$0.000037893	$0.0000430	$0.0000456	$0.00004	$0.0000452	$0.000023
(applicable when measurement and billing capability exists.)										
CCS7 Signaling Usage, per TCAP message		$0.0001	$0.00004	$0.0000870	$0.000102042	$0.0001052	$0.0001115	$0.00009	$0.0001108	$0.00005
(applicable when measurement and billing capability exists.)										
CCS7 Signaling Usage Surrogate, per link per LATA per mo (9)		$376.12	$64.00	$340.67	$329.98	$406.71	$406.53	$338.98	$396.55	$395.00
CCS7 Signaling Point Code, Establishment or Change, per STP affected										
NRC		$62.00	$62.00	$62.00	$62.00	$62.00	$62.00	$62.00	$62.00	$62.00
OPERATOR CALL PROCESSING										
Operator Provided Call Handling per min - Using BST LIDB	N/A	$1.21	$1.00	$0.9680296	$1.6016	$0.91	$1.19	$1.20	$1.21	NA
Call Completion Access Termination Charge per call attempt	N/A	$0.08	NA	NA	NA	NA	NA	NA	$0.08	NA
Operator Provided Call Handling per min - Using Foreign LIDB	N/A	$1.25	$1.00	$1.02	$1.6249	$0.96	$1.24	$1.24	$1.25	NA
Call Completion Access Termination Charge per call attempt	N/A	$0.08	NA	NA	NA	NA	NA	NA	$0.08	NA
Operator Provided Call Handling, per call	N/A	NA	NA	NA	NA	NA	NA	NA	NA	$0.30
Fully Automated Call Handling per call - Using BST LIDB	N/A	$0.11	$0.10	$0.0776409	$0.0856	$0.10	$0.1072884	$0.11	$0.1115808	$0.15
Fully Automated Call Handling per call - Using Foreign LIDB	N/A	$0.13	$0.10	$0.0976984	$0.1071	$0.12	$0.1253666	$0.12	$0.1293459	$0.15
Professional recording of name (OCP alone)	USOD1	$7,000.00	$7,000.00	$7,000.00	$7,000.00	$7,000.00	$7,000.00	$7,000.00	$7,000.00	$7,000.00
Professional recording of name (DA and OCP alone)	USOD1	$7,000.00	$7,000.00	$7,000.00	$7,000.00	$7,000.00	$7,000.00	$7,000.00	$7,000.00	$7,000.00
DRAM or front-end loading, per TOPS switch	USOD2	$250.00	$250.00	$250.00	$250.00	$250.00	$250.00	$250.00	$250.00	$250.00
AABS or back-end loading, per IVS	USOD2	$225.00	$225.00	$225.00	$225.00	$225.00	$225.00	$225.00	$225.00	$225.00
EBAS or 0- automation loading, per NAV shelf	USOD2	$270.00	$270.00	$270.00	$270.00	$270.00	$270.00	$270.00	$270.00	$270.00
Recording Charge per Branded Announcement – Disconnect – Initial	N/A	$9.61	NA	NA	NA	NA	NA	NA	NA	NA
Recording Charge per Branded Announcement – Disconnect – Subsequent	N/A	$9.61	NA	NA	NA	NA	NA	NA	NA	NA

DESCRIPTION	USOC	AL	FL	GA	KY	LA	MS	NC	SC	TN
INWARD OPERATOR SERVICES										
Verification, per minute	N/A	$1.16	NA	$0.921083	NA	$0.86	$1.14	$1.15	$1.15	NA
Verification and Emergency Interrupt, per minute	N/A	$1.16	NA	$0.921083	NA	$0.86	$1.14	$1.15	$1.15	NA
Verification, per call	VIL	NA	$0.80	NA	$1.00	NA	NA	$0.54	NA	$0.90
Verification and Emergency Interrupt, per call	N/A	NA	$1.00	NA	$1.111	NA	NA	$0.65	NA	$1.95
DIRECTORY ASSISTANCE SERVICES										
Directory Assist Call Completion Access Svc (DACC), per call attempt	N/A	$0.0598	$0.03	$0.0348712	$0.058	$0.04	$0.0425585	$0.062	$0.0638883	$0.12
Call Completion Access Term charge per completed call	N/A	NA	NA	NA	NA	NA	NA	NA	$0.08	NA
Number Services Intercept per query	N/A	$0.0235	$0.01	$0.0097497	$0.0086	$0.02	$0.0188268	$0.0110	$0.0124036	$0.15
Number Services Intercept per Intercept Query Update	N/A	NA	NA	NA	$0.0055	NA	NA	NA	NA	NA
Directory Assistance Access Service Calls, per call		$0.26	$0.25	$0.2124568	$0.3136	$0.20	$0.2617159	$0.260000	$0.2619983	NA
Professional recording of name (DA alone)		$3,000.00	$3,000.00	$3,000.00	$3,000.00	$3,000.00	$3,000.00	$3,000.00	$3,000.00	$3,000.00
Professional recording of name (DA and OCP alone)		$7,000.00	$7,000.00	$7,000.00	$7,000.00	$7,000.00	$7,000.00	$7,000.00	$7,000.00	$7,000.00
DRAM or front-end loading, per TOPS switch		$250.00	$250.00	$250.00	$250.00	$250.00	$250.00	$250.00	$250.00	$250.00
AABS or back-end loading, per IVS		$225.00	$225.00	$225.00	$225.00	$225.00	$225.00	$225.00	$225.00	$225.00
EBAS or 0- automation loading, per NAV shelf		$270.00	$270.00	$270.00	$270.00	$270.00	$270.00	$270.00	$270.00	$270.00
Recording Charge per Branded Announcement – Disconnect – Initial	N/A	$9.61	NA	NA	NA	NA	NA	NA	NA	NA
Recording Charge per Branded Announcement – Disconnect – Subsequent	N/A	$9.61	NA	NA	NA	NA	NA	NA	NA	NA
Directory Transport										
Directory Transport - Local Channel DS1, per month	N/A	$35.52	$43.64	$38.36	$36.32	$43.83	$38.91	$35.68	$37.20	$133.81
NRC - 1st	N/A	$503.57	$242.45	$356.15	$637.46	$339.69	$494.83	$534.48	$534.81	$868.97
NRC - Add'l	N/A	$442.84	$226.44	$312.89	$546.94	$298.29	$435.28	$462.69	$462.81	$486.83
NRC - Disconnect Charge - 1st	N/A	$46.28	NA	NA	NA	$33.02	$46.85	NA	NA	NA
NRC - Disconnect Charge - Add'l	N/A	$32.18	NA	NA	NA	$23.32	$33.02	NA	NA	NA
NRC - Incremental Charge-Manual Svc Order - NRC - 1st	SOMAN	$61.99	NA	$44.22	NA	$42.34	$59.58	$86.15	$87.99	NA
NRC - Incremental Charge-Manual Svc Order - NRC -addl	TBD	NA	NA	NA	NA	NA	NA	$1.77	NA	NA
NRC - Incremental Charge-Manual Svc Order - NRC-Disconnect	SOMAN	$29.27	NA	NA	NA	$19.48	$27.41	NA	$3.11	NA
Directory Transport - Dedicated DS1 Level Interoffice per mile per mo	N/A	$0.6923	$0.6013	$0.4523	$0.45	$0.78	$0.6598	$0.5753	$0.7598	$23.00
Directory Transport - Dedicated DS1 Level Interoffice per facility termination per mo	N/A	$79.69	$99.79	$78.47	$55.05	$93.40	$74.40	$71.29	$94.98	$90.00
NRC - 1st	N/A	$198.15	$45.91	$147.07	$298.18	$140.49	$196.28	$217.17	$216.27	$100.49
NRC - Add'l	N/A	$148.18	$44.18	$111.75	$231.18	$106.69	$147.31	$163.75	$162.70	$100.49
NRC - Disconnect Charge - 1st	N/A	$25.44	NA	NA	NA	$20.00	$26.56	NA	NA	NA
NRC - Disconnect Charge - Add'l	N/A	$20.42	NA	NA	NA	$16.34	$21.61	NA	NA	NA
NRC - Incremental Charge - Manual Service Order - 1st	SOMAN	$27.37	NA	$18.94	NA	$18.14	$25.52	$38.07	$39.63	NA
NRC - Incremental Charge - Manual Service Order - Add'l	SOMAN	$27.37	NA	NA	NA	$18.14	$25.52	$38.07	$39.63	NA
NRC - Incremental Charge - Manual Service Order - Disconnect - 1st	SOMAN	$12.97	NA	NA	NA	$8.06	$11.34	NA	NA	NA
NRC - Incremental Charge - Manual Service Order - Disconnect - Add'l	SOMAN	$12.97	NA	NA	NA	$8.06	$11.34	NA	NA	NA
Switched Common Transport per DA Access Service per call	N/A	$0.0003	$0.0003	$0.0002906	$0.000175	$0.0003274	$0.0002997	$0.00020	$0.000327	NA
Switched Common Transport per DA Access Service per call per mile	N/A	$0.00003	$0.00001	$0.0000186	$0.000004	$0.0000175	$0.0000202	$0.00003	$0.0000303	NA
Access Tandem Switching per DA Access Service per call	N/A	$0.0023	$0.00055	$0.0019152	$0.000783	$0.0025257	$0.0023713	$0.0021	$0.0024809	NA
DA Interconnection, per DA Access Service Call	N/A	$0.00269	NA	$0.00269	NA	NA	NA	$0.00	$0.000269	NA
Directory Transport-Installation NRC, per trunk or signaling connection	N/A									
NRC - 1st	N/A	$260.69	$206.06	$204.23	$501.98	$195.54	$257.73	BSTs FCC 1	$407.81	NA
NRC - Add'l	N/A	$5.95	$4.71	$4.42	$13.32	$4.23	$5.85	BSTs FCC 1	$11.00	NA
NRC - Disconnect Charge - 1st	N/A	$173.46	NA	NA	NA	NA	NA	NA	NA	NA
NRC - Disconnect Charge - Add'l	N/A	$5.95	NA	NA	NA	NA	NA	NA	NA	NA
NRC - Incremental Charge - Manual Service Order - 1st	SOMAN	NA	NA	$44.22	NA	$130.05	$171.49	$407.53	NA	NA
NRC - Incremental Charge - Manual Service Order - Add'l	SOMAN	NA	NA	NA	NA	$4.23	$5.85	$10.98	NA	NA
Directory Assistance Database Service (DADS)										
Directory Assistance Database Service charge per listing	N/A	$0.0446	$0.001	$0.0445	$0.0193	$0.0443	$0.0447	$0.04460	$0.0444	NA
Directory Assistance Database Service, per month	DBSOF	$128.55	$100.00	$95.50	$120.76	$90.54	$126.17	$126.26	$127.23	NA

DESCRIPTION	USOC	AL	FL	GA	KY	LA	MS	NC	SC	TN
Direct Access to Directory Assistance Service (DADAS)										
Direct Access to Directory Assistance Service, per month	DBSDS	$7,055.00	$5,000.00	$5,254.00	$7,235.01	$4,982.00	$6,926.00	$6,930.00	$6,983.00	NA
Direct Access to Directory Assistance Service, per query	DBSDA	$0.0472685	$0.01	$0.0469016	$0.0052	$0.0460	$0.0461336	$0.0456	$0.0468212	NA
Direct Access to Directory Assistance Service, svc estab charge	DBSDE									
NRC	DBSDE	$1,118.00	$820.00	$788.24	$1,186.94	$786.82	$1,097.00	$1,164.00	$1,173.00	NA
NRC - Disconnect	DBSDE	$81.83	NA	NA	NA	NA	NA	NA	NA	NA
NRC - Incremental Charge Manual Service Order - 1st	SOMAN	NA	NA	NA	NA	$57.23	$80.52	NA	NA	NA
AIN (Note 4)										TBD
AIN, per message	CAM	NA	$0.00004	NA	NA	NA	NA	NA	NA	NA
AIN - BellSouth AIN SMS Access Service	CAM								NA	NA
Service Establishment Charge, per state, initial set-up										
NRC	CAMSE	$197.49	NA	$90.25	NA	$153.31	$174.03	$294.77	$296.16	NA
NRC - Disconnect	CAMSE	$114.22	NA	NA	NA	$78.06	$135.96	NA	NA	NA
Port Connection - Dial/Shared Access										
NRC	CAMDP	$64.05	NA	$29.66	NA	$50.07	$53.47	$86.94	$87.29	NA
NRC - Disconnect	CAMDP	$27.04	NA	NA	NA	$18.61	$37.70	NA	NA	NA
Port Connection - ISDN Access										
NRC	CAM1P	$64.05	NA	$29.66	NA	$50.07	$53.47	$86.94	$87.29	NA
NRC - Disconnect	CAM1P	$27.04	NA	NA	NA	$18.61	$37.70	NA	NA	NA
User ID Codes - per User ID Code										
NRC	CAMAU	$141.84	NA	$84.43	NA	$104.95	$129.83	$200.83	$202.08	NA
NRC - Disconnect	CAMAU	$70.05	NA	NA	NA	$48.95	$79.91	NA	NA	NA
Security Card per User ID Code, initial or replacement										
NRC	CAMRC	$142.13	NA	$35.44	NA	$125.33	$131.54	$172.05	$172.26	NA
NRC - Disconnect	CAMRC	$35.26	NA	NA	NA	$24.40	$45.77	NA	NA	NA
Storage, per unit (100Kb)	N/A	$0.0026	NA	$0.0023	NA	$0.0029	$0.0029	$0.0023	$0.0028	NA
Session per minute	N/A	$0.0892	NA	$0.0795604	NA	$0.10	$0.0975650	$0.0791	$0.0942966	NA
C0. Performed Session, per minute					NA	$1.97	$2.09	$2.08	$2.07	NA
AIN - BellSouth AIN Toolkit Service										
AIN, Service Creation Tools	CAMBP	NA	TBD	NA	NA	NA	NA	NA	NA	NA
Service Establishment Charge, per state, initial set-up										
NRC	BAPSC	$192.69	NA	$86.74	NA	$153.25	$169.31	$290.05	$291.41	NA
NRC - Disconnect	BAPSC	$114.22	NA	NA	NA	$78.05	$135.96	NA	NA	NA
Training Session, per customer										
NRC	BAPVX	$8,363.00	NA	$8,348.00	NA	$8,315.00	$8,379.00	$8,363.00	$8,333.00	NA
NRC - Disconnect	BAPVX	NA	NA	NA	NA	NA	NA	NA	NA	NA
Trigger Access Charge, per trigger, per DN, Term. Attempt										
NRC	BAPTT	$49.64	NA	$19.13	NA	$41.08	$39.30	$72.76	$73.02	NA
NRC - Disconnect	BAPTT	$27.04	NA	NA	NA	$18.60	$37.70	NA	NA	NA
Trigger Access Charge, per trigger per DN, Off-Hook Delay										
NRC	BAPTD	$49.64	NA	$114.80	NA	$41.08	$39.30	$72.76	$73.02	NA
NRC - Disconnect	BAPTD	$27.04	NA	NA	NA	$18.60	$37.70	NA	NA	NA
Trigger Access Charge, per trigger, per DN, Off-Hook Immediate										
NRC	BAPTM	$49.64	NA	$19.13	NA	$41.08	$39.30	$72.76	$73.02	NA
NRC - Disconnect	BAPTM	$27.04	NA	NA	NA	$18.60	$37.70	NA	NA	NA
Trigger Access Charge, per trigger, per DN, 10-Digit PODP										
NRC	BAPTO	$117.98	NA	$70.06	NA	$92.99	$106.90	$149.95	$150.25	NA
NRC - Disconnect	BAPTO	$37.90	NA	NA	NA	$26.73	$48.44	NA	NA	NA
Trigger Access Charge, per trigger, per DN, CDP										
NRC	BAPTC	$117.98	NA	$70.06	NA	$92.99	$106.90	$149.95	$150.25	NA
NRC - Disconnect	BAPTC	$37.90	NA	NA	NA	$26.73	$48.44	NA	NA	NA
Trigger Access Charge, per trigger, per DN, Feature Code										
NRC	BAPTF	$117.98	NA	$70.06	NA	$92.99	$106.90	$149.95	$150.25	NA
NRC - Disconnect	BAPTF	$37.90	NA	NA	NA	$26.73	$48.44	NA	NA	NA
Query Charge, per query		$0.024	NA	$0.0209223	NA	$0.03	$0.0256138	$0.02	$0.0250662	NA

DESCRIPTION	USOC	AL	FL	GA	KY	LA	MS	NC	SC	TN
Type 1 Node Charge, per AIN Toolkit Subscription, per node, per query		$0.006	NA	$0.0053137	NA	$0.0065	$0.0065161	$0.005	$0.0062979	NA
SCP Storage Charge, per SMS Access Acct, per 100 Kb	N/A	$1.63	NA	$1.46	NA	$1.79	$1.79	$1.45	$1.73	NA
Monthly Report - per AIN Toolkit Service Subscription	BAPMS	$16.00	NA	$15.96	NA	$15.89	$16.01	$15.98	$15.93	NA
NRC	BAPMS	$44.56	NA	$22.64	NA	$34.61	$44.02	$71.80	$72.15	NA
NRC - Disconnect	BAPMS	$31.84	NA	NA	NA	$21.97	$31.28	NA	NA	NA
Special Study - per AIN Toolkit Service Subscription	BAPLS	$0.10	NA	$0.0861109	NA	$0.08	$0.0810536	$0.08	$0.0872769	NA
NRC	BAPLS	$47.74	NA	$22.64	NA	$37.77	$47.21	$47.20	$47.35	NA
NRC - Disconnect	BAPLS	$15.90	NA	NA	NA	NA	NA	NA	NA	NA
Call Event Report - per AIN Toolkit Service Subscription	BAPDS	$15.90	NA	$15.87	NA	$15.81	$15.93	$15.90	$15.84	NA
NRC	BAPDS	$44.56	NA	$22.64	NA	$34.61	$44.02	$71.80	$72.15	NA
NRC - Disconnect	BAPDS	$31.84	NA	NA	NA	$21.97	$31.28	NA	NA	NA
Call Event special Study - per AIN Toolkit Service Subscription	BAPES	$0.003	NA	$0.0028704	NA	$0.0026	$0.0027018	$0.003	$0.0029092	NA
NRC	BAPES	$47.74	NA	$22.64	NA	$37.77	$47.21	$47.20	$47.35	NA
NRC - Disconnect	BAPES	$15.90	NA	NA	NA	$37.77	NA	NA	NA	NA
CALLING NAME (CNAM) QUERY SERVICE										
CNAM (Database Owner), Per Query	N/A	$0.016	$0.016	$0.016	$0.016	$0.016	$0.016	$0.016	$0.016	$0.016
CNAM (Non-Database Owner), Per Query *	N/A	$0.01	$0.01	$0.01	$0.01	$0.01	$0.01	$0.01	$0.01	$0.01
NRC, applicable when CLEC-1 uses the Character Based User Interface (CHUI)	N/A	$595.00	$595.00	$595.00	$595.00	$595.00	$595.00	$595.00	$595.00	$595.00
* Volume and term arrangements are also available.										
SELECTIVE ROUTING (Note 5)										
Per Line or PBX Trunk, each		NA	NA	NA	$10.00 (Interim	NA	NA	NA	NA	TBD
NRC		NA	NA	NA	NA	NA	NA	NA	NA	TBD
Customized routing per unique line class code, per request, per switch						NA	NA	NA	NA	NA
NRC	USRCR	$230.60	$229.65	$180.62	$229.65	$229.65	$227.99	$229.65	$226.22	$229.65
NRC - Incremental Charge - Manual Service Order		$25.93	NA	$18.94	NA	NA	$253.51	NA	$27.84	NA
VIRTUAL COLLOCATION										
NRC - Virtual Collocation - Application Cost - Manual	TBD	NA	NA	NA	NA	NA	NA	$3,622.00	NA	NA
NRC - Virtual Collocation - Cable Installation Cost per Cable - Manual	TBD	NA	NA	NA	NA	NA	NA	$2,305.00	NA	NA
RC - Virtual Collocation - Floor space per square feet	TBD	NA	NA	NA	NA	NA	NA	$3.45	NA	NA
RC - Virtual Collocation - Floor space power, per ampere	TBD	NA	NA	NA	NA	NA	NA	$6.65	NA	NA
RC - Virtual Collocation - Cable support structure, per entrance cable	TBD	NA	NA	NA	NA	NA	NA	$18.66	NA	NA
2-wire Cross-Connect										
RC	UEAC2	$0.28	$0.524	$0.30	$0.31	$0.26	$0.3996	$0.09	$0.3648	$0.30
NRC - 1st	UEAC2	$30.76	$11.57	$12.60	$54.21	$23.04	$30.93	$41.78	$41.50	$19.20
NRC - Add'l	UEAC2	$29.40	$11.57	$12.60	$51.07	$22.11	$29.59	$39.23	$38.94	$19.20
NRC - 1st - Manual Service Order	TBD	NA	NA	NA	NA	NA	NA	$4.75	NA	NA
NRC - Add'l - Manual Service Order	TBD	NA	NA	NA	NA	NA	NA	$4.75	NA	NA
NRC - Disconnect - 1st	UEAC2	$12.75	NA	NA	NA	$9.48	$12.76	NA	NA	NA
NRC - Disconnect - Add'l	UEAC2	$11.38	NA	NA	NA	$8.54	$11.43	NA	NA	NA
4-wire Cross-Connect										
RC	UEAC4	$0.56	$0.524	$0.50	$0.62	$0.52	$0.7992	$0.18	$0.7297	$0.50
NRC - 1st	UEAC4	$66.71	$11.57	$12.60	$54.23	$23.23	$31.17	$41.91	$41.56	$19.20
NRC - Add'l	UEAC4	$50.43	$11.57	$12.60	$50.96	$22.24	$29.77	$39.25	$38.90	$19.20
NRC - 1st - Manual Service Order	TBD	NA	NA	NA	NA	NA	NA	$4.73	NA	NA
NRC - Add'l - Manual Service Order	TBD	NA	NA	NA	NA	NA	NA	$4.73	NA	NA
NRC - Disconnect - 1st	UEAC4	$12.82	NA	NA	NA	$9.53	$12.83	NA	NA	NA
NRC - Disconnect - Add'l	UEAC4	$11.39	NA	NA	NA	$8.55	$11.43	NA	NA	NA
2-fiber Cross-Connect										
RC	CNC2F	$12.10	NA	$15.64	$15.64	$19.13	$15.64	$15.99	$15.06	$15.64
NRC - 1st	CNC2F	$55.46	NA	$41.56	$41.56	$41.07	$41.56	$67.34	$69.28	$41.56
NRC - Add'l	CNC2F	$39.18	NA	$29.82	$29.82	$29.63	$29.82	$48.55	$48.89	$29.82
NRC - Disconnect - 1st	CNC2F	$16.83	NA	NA	NA	$12.84	$12.96	NA	NA	NA

DESCRIPTION	USOC	AL	FL	GA	KY	LA	MS	NC	SC	TN
NRC - Disconnect - Add'l	CNC2F	$13.27	NA	NA	NA	$10.29	$10.34	NA	NA	NA
4-fiber Cross-Connect										
RC	CNC4F	$21.75	NA	$28.11	$28.11	$34.38	$28.11	$28.74	$27.08	$28.11
NRC - 1st	CNC4F	$66.71	NA	$50.53	$50.53	$49.81	$50.53	$82.35	$84.07	$50.53
NRC - Add'l	CNC4F	$50.43	NA	$38.78	$38.78	$38.37	$38.78	$63.56	$63.68	$38.78
NRC - Disconnect - 1st	CNC4F	$21.86	NA	NA	NA	$16.75	$16.97	NA	NA	NA
NRC - Disconnect - Add'l	CNC4F	$18.31	NA	NA	NA	$14.20	$14.35	NA	NA	NA
DS1 Cross-Connects										
RC	TBD	NA	NA	NA	NA	NA	NA	$0.97	NA	NA
NRC - 1st	TBD	NA	NA	NA	NA	NA	NA	$71.02	NA	NA
NRC - Add'l	TBD	NA	NA	NA	NA	NA	NA	$51.08	NA	NA
NRC - Manual Service Order - 1st	TBD	NA	NA	NA	NA	NA	NA	$4.70	NA	NA
NRC - Manual Service Order - Add'l	TBD	NA	NA	NA	NA	NA	NA	$4.70	NA	NA
DS3 Cross-Connects										
RC	TBD	NA	NA	NA	NA	NA	NA	$12.33	NA	NA
NRC - 1st	TBD	NA	NA	NA	NA	NA	NA	$69.84	NA	NA
NRC - Add'l	TBD	NA	NA	NA	NA	NA	NA	$49.43	NA	NA
NRC - Manual Service Order - 1st	TBD	NA	NA	NA	NA	NA	NA	$4.70	NA	NA
NRC - Manual Service Order - Add'l	TBD	NA	NA	NA	NA	NA	NA	$4.70	NA	NA
If no rate is identified in the contract, the rate for the specific service or function will be as set forth in applicable BellSouth tariff or as negotiated by the parties upon request by either party.										
1 BellSouth and CLEC shall negotiate rates for this offering. If agreement is not reached within sixty (60) days of the Effective Date, either party may petition the Florida PSC to settle the disputed charge or charges. (FL)										
2 This rate element is for those states w/o separate rates for 800 calls with 800 No. Delivery vs. POTS No. Delivery and calls with Optional Complex Features vs. w/o Optional Complex Features.										
3 This charge is only applicable where signaling usage measurement or billing capability does not exist.										
4 Prices for AIN to be determined upon development of mediation device. (TN)										
5 Price for Line Class Codes for Selective Routing shall be determined by the TRA. (TN)										

Attachment 3

Network Interconnection

TABLE OF CONTENTS

1. Network Interconnection 3

2. Interconnection Trunking Architectures 7

3. Network Design And Management For Interconnection 13

4. Local Dialing Parity 16

5. Interconnection Compensation 16

6. Frame Relay Service 23

7. Remote Access Server (RAS) Network Interconnection 26

8. Operational Support Systems (OSS) Rates 29

Rates ..... Exhibit A

Basic Architecture ..... Exhibit B

One-Way Trunking Architecture ..... Exhibit C

Two-Way Trunking Architecture ..... Exhibit D

Supergroup Architecture ..... Exhibit E

Network Interconnection

The Parties shall provide interconnection with each other's networks for the transmission and routing of telephone exchange service (local) and exchange access (intraLATA toll and switched access) on the following terms:

1. Network Interconnection

All negotiated rates, terms and conditions set forth in this Attachment pertain to the provision of network interconnection.

1.1 Interconnection is available to both Parties through: (1) delivery of a Party's facilities to a collocation arrangement or Fiber Meet arrangement as defined in this Agreement; or (2) interconnection via purchase of facilities from the other Party. Interconnection may be provided by the Parties at any other technically feasible point. Requests to BellSouth for interconnection at other points may be made through the Bona Fide Request/New Business Request process set out in General Terms and Conditions.

1.2 ACCESS Integrated must establish, at a minimum, a single Point of Presence, Interface, and Interconnection with BellSouth within the LATA for the delivery of ACCESS Integrated's originated local and intraLATA toll traffic and for the receipt and delivery of transit traffic. If ACCESS Integrated chooses to interconnect at a single Point of Interconnection within a LATA, the interconnection must be at a BellSouth Access Tandem. Furthermore, ACCESS Integrated must establish Points of Interconnection at all BellSouth access and local tandems where ACCESS Integrated NXXs are "homed." A "Homing" arrangement is defined by a "Final" Trunk Group between the BellSouth Tandem and ACCESS Integrated End Office switch. A "Final" Trunk Group is the last choice telecommunications path between the Tandem and End Office switch. It is ACCESS Integrated's responsibility to enter its own NPA/NXX access and/or local tandem "homing" arrangements into the national Local Exchange Routing Guide (LERG).

1.2.1 In order for ACCESS Integrated to home its NPA/NXX(s) on a BellSouth Tandem, ACCESS Integrated's NPA/NXX(s) must be assigned to an Exchange Rate Center Area served by that BellSouth Tandem and as specified by BellSouth. The specified association between BellSouth Tandems and Exchange Rate Center Areas is defined in the Local Exchange Routing Guide (LERG) as it is revised from time to time.

1.3 A **Point of Presence (POP)** is the physical location (a structure where the environmental, power, air conditioning, etc. specifications for a Party's

terminating equipment can be met) at which a Party establishes itself for obtaining access to the other Party's network. The POP is the physical location within which the Point of Interfaces occur.

1.4 A **Point of Interface** is the physical telecommunications interface between BellSouth and ACCESS Integrated's interconnection functions. It establishes the technical interface and point of operational responsibility. The primary function of the Point of Interface is to serve as the terminus for the interconnection service. The Point of Interface has the following main characteristics:

1. It is a cross-connect point to allow connection, disconnection, transfer or restoration of service.
2. It is a point where BellSouth and ACCESS Integrated can verify and maintain specific performance objectives.
3. It is specified according to the interface offered in the tariff or local interconnection agreement (for example: for DS1 service the FCC # 1 tariff specifies that the interface meets the technical specifications detailed in Generic Requirements GR-342-CORE, Issue 1, December 1995.)
4. The Parties provide their own equipment (CPE) to interface with the DS0, DS1, DS3, STS1 and/or OCn circuits on the customer premises.

1.5 The **Point of Interconnection** is the point at which the originating Party delivers its originated traffic to the terminating Party's first point of switching on the terminating Party's common (shared) network for call transport and termination. Points of Interconnection are available at either Access Tandems, Local Tandems, or End Offices as described in this Agreement. ACCESS Integrated's requested Point of Interconnection will also be used for the receipt and delivery of transit traffic at BellSouth Access and Local Tandems. Points of Interconnection established at the BellSouth Local Tandem apply only to ACCESS Integrated-originated local and local originating and terminating transit traffic.

1.6 ACCESS Integrated, at its option, shall establish Points of Presence and Points of Interface for the delivery of its originated local and intraLATA toll traffic to BellSouth. The Point of Interface may not necessarily be established at the Point of Interconnection.

1.7 BellSouth, at its option, shall designate the Points of Presence and Points of Interface for the delivery of its originated local and intraLATA toll traffic to ACCESS Integrated for call transport and termination by ACCESS Integrated. The Point of Interface may not necessarily be established at the Point of Interconnection.

1.8 <u>Interconnection via Leased Dedicated Transport Facilities</u>

1.8.1 The originating Party may purchase Local Channel facilities from the terminating Party from the originating Party's specified Point of Interface to its serving wire center. The Parties agree that charges for such Local Channel facilities are as set forth in Exhibit A to this Attachment. If a nonrecurring or recurring rate is not identified in Exhibit A for a Local Channel, the rate shall be as set forth in the appropriate BellSouth intrastate or interstate tariff for switched access services.

1.8.2 Additionally, either Party may purchase Dedicated Interoffice Transport facilities from its designated serving wire center to the other Party's first point of switching. The Parties agree that charges for such Dedicated Transport facilities are as set forth in Exhibit A to this Attachment. If a nonrecurring or recurring rate is not identified in Exhibit A for Dedicated Transport, the rate shall be as set forth in the appropriate BellSouth intrastate or interstate tariff for switched access services.

1.8.3 For the purposes of this Attachment, **Local Channel** is defined as a switch transport facility between a Party's Point of Presence and its designated serving wire center.

1.8.4 For the purposes of this Attachment, **Serving Wire Center** is defined as the wire center owned by one Party from which the other Party would normally obtain dial tone for its Point of Presence.

1.8.5 For the purposes of this Attachment, **Dedicated Interoffice Transport** is defined as a switch transport facility between a Party's designated serving wire center and the first point of switching on the other Party's common (shared) network.

1.9 Fiber Meet

1.9.1 **Fiber Meet** is an interconnection arrangement whereby the Parties physically interconnect their networks via an optical fiber interface (as opposed to an electrical interface) at which one Party's facilities, provisioning, and maintenance responsibility begins and the other Party's responsibility ends (i.e. Point of Interface).

1.9.2 If ACCESS Integrated elects to interconnect with BellSouth pursuant to a Fiber Meet, ACCESS Integrated and BellSouth shall jointly engineer and operate a Synchronous Optical Network ("SONET") transmission system by which they shall interconnect their transmission and routing of local traffic via a Local Channel facility at either the DS0, DS1, or DS3 level. The Parties shall work jointly to determine the specific transmission system. However, ACCESS Integrated's SONET transmission must be compatible with BellSouth's equipment in the BellSouth Interconnection Wire Center. The same vendor's equipment and software version must be used, and the Data Communications Channel (DCC) must be turned off.

1.9.3 BellSouth shall, wholly at its own expense, procure, install and maintain the agreed upon SONET equipment in the BellSouth Interconnection Wire Center ("BIWC").

1.9.4 ACCESS Integrated shall, wholly at its own expense, procure, install and maintain the agreed upon SONET equipment in the ACCESS Integrated Interconnection Wire Center ("ACCESS Integrated Wire Center").

1.9.5 BellSouth shall designate a Point of Interface outside the BIWC as a Fiber Meet point, and shall make all necessary preparations to receive, and to allow and enable ACCESS Integrated to deliver, fiber optic facilities into the Point of Interface with sufficient spare length to reach the fusion splice point at the Point of Interface. BellSouth shall, wholly at its own expense, procure, install, and maintain the fusion splicing point in the Point of Interface. A Common Language Location Identification ("CLLI") code will be established for each Point of Interface. The code established must be a building type code. All orders shall originate from the Point of Interface (i.e., Point of Interface to ACCESS Integrated, Point of Interface to BellSouth).

1.9.6 ACCESS Integrated shall deliver and maintain such strands wholly at its own expense. Upon verbal request by ACCESS Integrated, BellSouth shall allow ACCESS Integrated access to the Fiber Meet entry point for maintenance purposes as promptly as possible.

1.9.7 The Parties shall jointly coordinate and undertake maintenance of the SONET transmission system. Each Party shall be responsible for maintaining the components of their own SONET transmission system.

1.9.8 Each Party will be responsible for (i) providing its own transport facilities to the Fiber Meet, and (ii) the cost to build-out its facilities to such Fiber Meet.

1.9.9 Neither Party shall charge the other for its portion of the Fiber Meet facility used exclusively for non-transit local traffic (i.e. the Local Channel). Charges incurred for other services including dedicated transport facilities to the Point of Interconnection if applicable will apply. Charges for Switched and Special Access Services shall be billed in accordance with the applicable Access Service tariff (i.e. the BellSouth Interstate or Intrastate Access Services Tariff).

2. Interconnection Trunking Architectures

2.1 BellSouth and ACCESS Integrated shall establish interconnecting trunk groups and trunking configurations between networks including the establishment of one-way or two-way trunks in accordance with the following provisions set forth in this Agreement.

2.2 Any ACCESS Integrated interconnection request that deviates from the standard trunking architectures as described in this Agreement that affects traffic delivered to ACCESS Integrated from a BellSouth switch that requires special BellSouth switch translations and other network modifications will require ACCESS Integrated to submit a Bona Fide Request/New Business Request via the Bona Fide Request/New Business Request Process set forth in General Terms and Conditions.

2.3 All terms and conditions, as well as charges, both non-recurring and recurring, associated with interconnecting trunk groups between BellSouth and ACCESS Integrated not addressed in Exhibit A shall be as set forth in the appropriate BellSouth intrastate or interstate tariff for switched access services. For two-way trunking that carries the Parties' local and intraLATA toll traffic only, excluding trunking that carries Transit Traffic, the Parties shall be compensated for the nonrecurring and recurring charges for trunks and DS1 facilities at 50% of the applicable contractual or tariff rates for the services provided by each Party. ACCESS Integrated shall be responsible for ordering and paying for any two-way trunks carrying transit traffic. Furthermore, ACCESS Integrated shall be responsible for the compensation for two-way trunking that it orders for its local and intraLATA toll but utilizes unidirectionally.

2.4 Switched Access traffic will be delivered to and by IXCs based on ACCESS Integrated's NXX Access Tandem homing arrangement as specified by ACCESS Integrated in the national Local Exchange Routing Guide (LERG).

2.5 All trunk groups will be provisioned as Signaling System 7 (SS7) capable where technically feasible. If SS7 is not technically feasible multi-frequency (MF) protocol signaling shall be used.

2.6 In cases where ACCESS Integrated is also an IXC, the IXC's Feature Group D (FG D) trunking must remain separate from the local interconnection trunking.

2.7 Two-Way Trunking Requirements:

The following requirements apply to two-way trunking that carries the Parties local and intraLATA toll.

1. ACCESS Integrated will initiate two-way trunk request. The use of and quantity of two way trunking shall be mutually agreed upon and shall be jointly provisioned.

2. The Point of Interface will be located at a mutually agreed location or point designated by BellSouth. If an agreement cannot be reached on the location of the Point of Interface, each company will establish its own Point of Interface and order one-way trunks.

3. BellSouth and ACCESS Integrated will jointly review the trunk forecast, as needed, on a periodic basis, or at least every six (6) months.

4. ACCESS Integrated will order trunks using access service request (ASR) process in place for Local Interconnection after the joint planning meeting takes place between BellSouth and ACCESS Integrated.

5. BellSouth and ACCESS Integrated must agree on traffic engineering parameters that will be used in the engineering of the trunk groups.

6. BellSouth and ACCESS Integrated must agree to meet and resolve service-affecting situations in a timely manner. This contact will normally be made through the Account Team.

7. Establishing a two-way trunk group does not preclude BellSouth or ACCESS Integrated from adding one-way trunk groups within the same Local Calling Area.

8. For technical reasons, two-way trunk groups may not be ordered to a BellSouth DMS100 Local Tandem or DMS100 End Office.

9. BellSouth will be responsible for the installation and maintenance of its trunks and facilities to the mutually agreed Point of Interface, and ACCESS Integrated will be responsible for the installation and maintenance of its trunks and facilities to the mutually agreed to Point of Interface.

2.8 BellSouth Access Tandem Interconnection Architectures

2.8.1 BellSouth Access Tandem Interconnection provides intratandem access to subtending end offices. BellSouth Multiple Tandem Access (MTA), described later in this Agreement, may be ordered using any of the following access tandem architectures.

2.8.2 Basic Architecture

2.8.2.1 In this architecture, ACCESS Integrated's originating Local and IntraLATA Toll and originating and terminating Transit Traffic is transported on a single two-way trunk group between ACCESS Integrated and BellSouth access tandem(s) within

a LATA. This group carries intratandem Transit Traffic between ACCESS Integrated and Independent Companies, Interexchange Carriers, other CLECs and other network providers with which ACCESS Integrated desires interconnection and has the proper contractual arrangements. This group also carries ACCESS Integrated originated intertandem traffic transiting a single BellSouth access tandem destined to third party tandems such as an Independent Company tandem or other CLEC tandem. BellSouth originated Local and IntraLATA Toll traffic is transported on a single one-way trunk group terminating to ACCESS Integrated. The Two-way Trunking Requirements described in this Attachment do not apply to this architecture. Other trunk groups for operator services, directory assistance, emergency services and intercept may be established if required. The LERG should be referenced for current routing and tandem serving arrangements. The Basic Architecture is illustrated in Exhibit B.

2.8.3 One-Way Trunking Architecture

2.8.3.1 In this architecture, the Parties interconnect using two one-way trunk groups. One one-way trunk group carries ACCESS Integrated-originated local and intraLATA toll traffic destined for BellSouth end-users. The other one-way trunk group carries BellSouth-originated local and intraLATA toll traffic destined for ACCESS Integrated end-users. A third two-way trunk group is established for ACCESS Integrated's originating and terminating Transit Traffic. This group carries intratandem Transit Traffic between ACCESS Integrated and Independent Companies, Interexchange Carriers, other CLECs and other network providers with which ACCESS Integrated desires interconnection and has the proper contractual arrangements. This group also carries ACCESS Integrated originated intertandem traffic transiting a single BellSouth access tandem destined to third party tandems such as an Independent Company tandem or other CLEC tandem. Other trunk groups for operator services, directory assistance, emergency services and intercept may be established if required. The LERG should be referenced for current routing and tandem serving arrangements. The One-Way Trunking Architecture is illustrated in Exhibit C.

2.8.4 Two-Way Trunking Architecture

2.8.4.1 The Two-Way Trunking Architecture establishes one two-way trunk group to carry local and intraLATA toll traffic between ACCESS Integrated and BellSouth. To establish this architecture, ACCESS Integrated and BellSouth must meet the Two-way Trunking Requirements described in this Attachment. In addition, a two-way transit trunk group must be established for ACCESS Integrated's originating and terminating Transit Traffic. This group carries intratandem Transit Traffic between ACCESS Integrated and Independent Companies, Interexchange Carriers, other CLECs and other network providers with which ACCESS Integrated desires interconnection and has the proper contractual arrangements. This group also carries ACCESS Integrated originated intertandem traffic

transiting a single BellSouth access tandem destined to third party tandems such as an Independent Company tandem or other CLEC tandem. Other trunk groups for operator services, directory assistance, emergency services and intercept may be established if required. The LERG should be referenced for current routing and tandem serving arrangements. The Two-Way Trunking Architecture is illustrated in Exhibit D.

2.8.5 Supergroup Architecture

2.8.5.1 In the Supergroup Architecture, the Parties Local and IntraLATA Toll and ACCESS Integrated's Transit Traffic is exchanged on a single two-way trunk group between ACCESS Integrated and BellSouth. To establish this architecture, ACCESS Integrated and BellSouth must meet the Two-way Trunking Requirements described in this Attachment. This group carries intratandem Transit Traffic between ACCESS Integrated and Independent Companies, Interexchange Carriers, other CLECs and other network providers with which ACCESS Integrated desires interconnection and has the proper contractual arrangements. This group also carries ACCESS Integrated originated intertandem traffic transiting a single BellSouth access tandem destined to third party tandems such as an Independent Company tandem or other CLEC tandem. Other trunk groups for operator services, directory assistance, emergency services and intercept may be established if required. The LERG should be referenced for current routing and tandem serving arrangements. The Supergroup Architecture is illustrated in Exhibit E.

2.9 BellSouth **Multiple Tandem Access (MTA)** provides for LATA wide BellSouth transport and termination of ACCESS Integrated-originated intraLATA toll and local traffic, that is transported by BellSouth, by establishing a Point of Interconnection at a BellSouth access tandem with routing through multiple BellSouth access tandems as required. However, ACCESS Integrated must still establish Points of Interconnection at all BellSouth access tandems where ACCESS Integrated NXXs are "homed". If ACCESS Integrated does not have NXXs homed at a BellSouth access tandem within a LATA and elects not to establish Points of Interconnection at such BellSouth access tandem, ACCESS Integrated can order MTA in each BellSouth access tandem within the LATA where it does have a Point of Interconnection and BellSouth will terminate traffic to end-users served through those BellSouth access tandems where ACCESS Integrated does not have a Point of Interconnection. MTA shall be provisioned in accordance with BellSouth's Ordering Guidelines.

2.10 MTA does not include switched access traffic that transits the BellSouth network to an Interexchange Carrier (IXC). Switched Access traffic will be delivered to and by IXCs based on ACCESS Integrated's NXX Access Tandem homing arrangement as specified by ACCESS Integrated in the national Local Exchange Routing Guide (LERG).

2.11 For ACCESS Integrated-originated local and intraLATA toll traffic that BellSouth transports but is destined for termination by a third Party network (transit traffic), BellSouth MTA is required if multiple BellSouth access tandems are necessary to deliver the call to the third Party network.

2.12 The Parties agree that compensation for the BellSouth transport and/or termination of ACCESS Integrated's local and intraLATA toll traffic will be billed on a statewide basis at the applicable rates specified in Exhibit A to this Attachment for local traffic and at the BellSouth intrastate switched access tariff rates for intraLATA toll traffic.

2.13 To the extent ACCESS Integrated does not purchase MTA in a calling area that has multiple access tandems serving the calling area as defined by BellSouth, ACCESS Integrated must establish Points of Interconnection to every access tandem in the calling area in order to serve the entire calling area. To the extent ACCESS Integrated does not purchase MTA and provides intraLATA toll service to its customers, it may be necessary for it to establish a Point of Interconnection to additional BellSouth access tandems that serve end offices outside the local calling area. To the extent ACCESS Integrated routes its traffic in such a way that utilizes BellSouth's MTA service without properly ordering MTA service, ACCESS Integrated agrees to pay BellSouth the associated transport and termination charges.

2.14 BellSouth End Office Interconnection

2.14.1 ACCESS Integrated may establish interconnection at BellSouth end offices for the delivery of ACCESS Integrated originated local and intralata toll traffic destined for BellSouth end-users served by that end-office.

2.14.2 When end office trunking is ordered by BellSouth to deliver BellSouth originated traffic to ACCESS Integrated, BellSouth will provide overflow routing through BellSouth tandems consistent with how BellSouth overflows it's traffic. The overflow will be based on the homing arrangements ACCESS Integrated displays in the LERG. Likewise, if ACCESS Integrated interconnects to a BellSouth end office for delivery of ACCESS Integrated originated traffic, ACCESS Integrated will overflow the traffic through the BellSouth tandems based on the BellSouth homing arrangements shown in the LERG.

2.14.3 The Parties shall utilize direct end office trunking under the following conditions:

(1) Tandem Exhaust - If a tandem through which the Parties are interconnected is unable to, or is forecasted to be unable to support additional traffic loads for any period of time, the Parties will mutually agree on an end office trunking plan that will alleviate the tandem capacity shortage and ensure completion of traffic between ACCESS Integrated and BellSouth's subscribers.

(2) Traffic Volume –To the extent either Party has the capability to measure the amount of traffic between a ACCESS Integrated switching center and a BellSouth end office, either Party shall install and retain direct end office trunking sufficient to handle actual or reasonably forecasted traffic volumes, whichever is greater, between a ACCESS Integrated switching center and a BellSouth end office where the traffic exceeds or is forecasted to exceed a single DS1 of local traffic per month. Either Party will install additional capacity between such points when overflow traffic between ACCESS Integrated's switching center and BellSouth's end office exceeds or is forecasted to exceed a single DS1 of local traffic per month. In the case of one way trunking, additional trunking shall only be required by the Party whose trunking has achieved the preceding usage threshold.

(3) Mutual Agreement - The Parties may install direct end office trunking upon mutual agreement in the absence of conditions (1) or (2) above and agreement will not unreasonably be withheld.

2.15 Local Tandem Interconnection.

2.15.1 This interconnection arrangement allows ACCESS Integrated to establish a Point of Interconnection at BellSouth local tandems for: (1) the delivery of ACCESS Integrated-originated local traffic transported and terminated by BellSouth to BellSouth end offices within the local calling area as defined in BellSouth's General Subscriber Services Tariff (GSST), section A3 served by those BellSouth local tandems, and (2) for local transit traffic transported by BellSouth for third

party network providers who have also established Points of Interconnection at those BellSouth local tandems.

2.15.2 When a specified local calling area is served by more than one BellSouth local tandem, ACCESS Integrated must designate a "home" local tandem for each of its assigned NPA/NXXs and establish trunk connections to such local tandems. Additionally, ACCESS Integrated may choose to establish a Point of Interconnection at the BellSouth local tandems where it has no codes homing but is not required to do so. ACCESS Integrated may deliver local traffic to a "home" BellSouth local tandem that is destined for other BellSouth or third party network provider end offices subtending other BellSouth local tandems in the same local calling area where ACCESS Integrated does not choose to establish a Point of Interconnection. It is ACCESS Integrated's responsibility to enter its own NPA/NXX local tandem homing arrangements into the Local Exchange Routing Guide (LERG) either directly or via a vendor in order for other third party network providers to determine appropriate traffic routing to ACCESS Integrated's codes. Likewise, ACCESS Integrated shall obtain its routing information from the LERG.

2.15.3 Notwithstanding establishing Points of Interconnection to BellSouth's local tandems, ACCESS Integrated must also establish Points of Interconnection to BellSouth access tandems within the LATA on which ACCESS Integrated has NPA/NXXs homed for the delivery of Interexchange Carrier Switched Access (SWA) and toll traffic, and traffic to Type 2A CMRS connections located at the access tandems. BellSouth shall not switch SWA traffic through more than one BellSouth access tandem. SWA, Type 2A CMRS or toll traffic routed to the local tandem in error will not be backhauled to the BellSouth access tandem for completion. (Type 2A CMRS interconnection is defined in BellSouth's A35 General Subscriber Services Tariff.)

2.15.4 BellSouth's provisioning of local tandem interconnection assumes that ACCESS Integrated has executed the necessary local interconnection agreements with the other third party network providers subtending those local tandems as required by the Act.

3. Network Design And Management For Interconnection

3.1 Network Management and Changes. Both Parties will work cooperatively with each other to install and maintain the most effective and reliable interconnected telecommunications networks, including but not limited to, the exchange of toll-free maintenance contact numbers and escalation procedures. Both Parties agree to provide public notice of changes in the information necessary for the transmission and routing of services using its local exchange facilities or

networks, as well as of any other changes that would affect the interoperability of those facilities and networks.

3.2 Interconnection Technical Standards. The interconnection of all networks will be based upon accepted industry/national guidelines for transmission standards and traffic blocking criteria. Interconnecting facilities shall conform, at a minimum, to the telecommunications industry standard of DS-1 pursuant to Bellcore Standard No. TR-NWT-00499. Signal transfer point, Signaling System 7 ("SS7") connectivity is required at each interconnection point. BellSouth will provide out-of-band signaling using Common Channel Signaling Access Capability where technically and economically feasible, in accordance with the technical specifications set forth in the BellSouth Guidelines to Technical Publication, TR-TSV-000905. Facilities of each Party shall provide the necessary on-hook, off-hook answer and disconnect supervision and shall hand off calling number ID (Calling Party Number) when technically feasible.

3.3 Quality of Interconnection. The local interconnection for the transmission and routing of telephone exchange service and exchange access that each Party provides to each other will be at least equal in quality to what it provides to itself and any subsidiary or affiliate, where technically feasible, or to any other Party to which each Party provides local interconnection.

3.4 Network Management Controls. Both Parties will work cooperatively with each other to apply sound network management principles by invoking appropriate network management controls (e.g., call gapping) to alleviate or prevent network congestion.

3.5 Common Channel Signaling. Both Parties will provide LEC-to-LEC Common Channel Signaling ("CCS") to each other, where available, in conjunction with all traffic in order to enable full interoperability of CLASS features and functions except for call return. All CCS signaling parameters will be provided, including automatic number identification ("ANI"), originating line information ("OLI") calling company category, charge number, etc. All privacy indicators will be honored, and each Party will cooperate with each other on the exchange of Transactional Capabilities Application Part ("TCAP") messages to facilitate full interoperability of CCS-based features between the respective networks. Neither Party shall alter the CCS parameters, or be a party to altering such parameters, or knowingly pass CCS parameters that have been altered in order to circumvent appropriate interconnection charges.

3.6 Signaling Call Information. BellSouth and ACCESS Integrated will send and receive 10 digits for local traffic. Additionally, BellSouth and ACCESS Integrated will exchange the proper call information, i.e. originated call company number and destination call company number, CIC, and OZZ, including all proper

translations for routing between networks and any information necessary for billing.

3.7 Forecasting Requirements. The Parties shall exchange technical descriptions and forecasts of their interconnection and traffic requirements in sufficient detail necessary to establish the interconnections required to assure traffic completion to and from all customers in their respective designated service areas. In order for the Parties to provide as accurate reciprocal trunking forecasts as possible to each other, each Party must timely inform the other Party of any known or anticipated events that may affect reciprocal trunking requirements. If either Party is unable to provide such information, The Parties shall provide reciprocal trunking forecasts based only on existing trunk group growth and annual estimated percentage of subscriber line growth.

3.7.1 Both Parties shall meet every six months or at otherwise mutually agreeable intervals for the purpose of exchanging non-binding forecasts of its traffic and volume requirements for the interconnection and network elements provided under this Agreement, in the form and in such detail as agreed by the Parties. The Parties agree that each forecast provided under this Section shall be deemed "Confidential Information" in the General Terms and Conditions – Part A of this Agreement.

3.7.2 The trunk forecast should include trunk requirements for all of the interconnecting trunk groups for the current year plus the next two future years. The forecast meeting between the two companies may be a face-to-face meeting, video conference or audio conference. It may be held regionally or geographically. Ideally, these forecast meetings should be held at least semi-annually, or more often if the forecast is no longer usable. Updates to a forecast or portions thereof should be made whenever the Party providing the forecast deems that the latest trunk requirements exceed the original quantities by 24 trunks or 10%, whichever is greater. Either Party should notify the other Party if they have measurements indicating that a trunk group is exceeding its designed call carrying capacity and is impacting other trunk groups in the network. Also, either Party should notify the other Party if they know of situations in which the traffic load is expected to increase significantly and thus affect the interconnecting trunk requirements as well as the trunk requirements within the other Party's network. The Parties agree that the forecast information provided under this Section shall be deemed "Confidential Information" as set forth in the General Terms and Conditions of this Agreement.

3.7.3 For a non-binding trunk forecast, agreement between the two Parties on the trunk quantities and the timeframe of those trunks does not imply any liability for failure to perform if the trunks are not available for use at the required time.

4. Local Dialing Parity

4.1 BellSouth and ACCESS Integrated shall provide local and toll dialing parity to each other with no unreasonable dialing delays. Dialing parity shall be provided for all originating telecommunications services that require dialing to route a call. BellSouth and ACCESS Integrated shall permit similarly situated telephone exchange service end users to dial the same number of digits to make a local telephone call notwithstanding the identity of the end user's or the called party's telecommunications service provider.

5. Interconnection Compensation

5.1 Compensation for Call Transportation and Termination for Local Traffic

5.1.1 Local Traffic is defined as any telephone call that originates in one exchange and terminates in either the same exchange, or other local calling area associated with the originating exchange as defined and specified in Section A3 of BellSouth's General Subscriber Service Tariff. As clarification of this definition and for reciprocal transport and termination compensation, Local Traffic does not include traffic that originates from or is directed to or through an enhanced service provider or information service provider. As further clarification, Local Traffic does not include calls that do not transmit information of the user's choosing. In any event, neither Party will pay reciprocal compensation to the other if the "traffic" to which such reciprocal compensation would otherwise apply was generated, in whole or in part, for the purpose of creating an obligation on the part of the originating carrier to pay reciprocal compensation for such traffic.

5.1.2 The Parties shall provide for the mutual and reciprocal recovery of the costs for the elemental functions performed in transporting and terminating local traffic on each other's network. The Parties agree that charges for transport and termination of calls on its respective networks are as set forth in Exhibit A to this Attachment.

5.1.3 For the purposes of this Attachment, **Common (Shared) Transport** is defined as the transport of the originating Party's traffic by the terminating Party over the terminating Party's common (shared) facilities between the terminating Party's tandem switch and end office switch and/or between the terminating Party's tandem switches.

5.1.4 For the purposes of this Attachment, **Tandem Switching** is defined as the function that establishes a communications path between two switching offices through a third switching office (the Tandem switch).

5.1.5 For the purposes of this Attachment, **End Office Switching** is defined as the function that establishes a communications path between the trunk side and line side of the End Office switch.

5.1.6 If ACCESS Integrated utilizes a switch outside the LATA and BellSouth chooses to purchase dedicated or common (shared) transport from ACCESS Integrated for transport and termination of BellSouth originated traffic, BellSouth will pay ACCESS Integrated no more than the airline miles between the V & H coordinates of the Point of Interface within the LATA where ACCESS Integrated receives the BellSouth-originated traffic and the V & H coordinates of the BellSouth Exchange Rate Center Area that the ACCESS Integrated terminating NPA/NXX is associated in the same LATA. For these situations, BellSouth will compensate ACCESS Integrated at either dedicated or common (shared) transport rates specified in Exhibit A and based upon the functions provided by ACCESS Integrated as defined in this Attachment.

5.1.7 Neither Party shall represent access services traffic (e.g. Internet Protocol (IP) Telephony, FGA, FGB, etc.) as Local Traffic for purposes of payment of reciprocal compensation.

5.1.8 The Parties agree that the jurisdiction of a call is determined by its originating and terminating (end-to-end) points. For the purpose of delivery of BellSouth originating traffic to ACCESS Integrated, BellSouth will pay to ACCESS Integrated reciprocal compensation for Local Traffic terminating to ACCESS Integrated end users physically located in the BellSouth rate center to which the ACCESS Integrated end user's NPA/NXX is assigned. If ACCESS Integrated assigns NPA/NXXs to specific BellSouth rate centers and assigns numbers from those NPA/NXXs to ACCESS Integrated end users physically located outside of the rate center to which the NPA/NXX is assigned, BellSouth traffic originating from within the BellSouth rate center where the NPA/NXX is assigned and terminating to a ACCESS Integrated customer physically located outside of such rate center, and at a location toll to the BellSouth originating rate center, shall not be deemed Local Traffic, and no compensation from BellSouth to ACCESS Integrated shall be due therefor. Further, ACCESS Integrated agrees to identify such traffic to BellSouth and to compensate BellSouth for originating and transporting such traffic to ACCESS Integrated at BellSouth's tariffed intrastate switched access rates. In addition, ACCESS Integrated should not use NPA/NXXs to collect BellSouth originated local or intraLATA toll traffic and for delivery to a point outside the LATA from where the originating NPA/NXX rate center resides.

5.1.9 If ACCESS Integrated does not identify such traffic to BellSouth, to the best of BellSouth's ability BellSouth will determine which whole ACCESS Integrated NPA/NXXs on which to charge the applicable rates for originating intrastate network access service as reflected in BellSouth's Intrastate Access Service

Tariff. BellSouth shall make appropriate billing adjustments if ACCESS Integrated can provide sufficient information for BellSouth to determine whether said traffic is local or toll.

5.2 Percent Local Use. Each Party will report to the other a Percentage Local Usage ("PLU"). The application of the PLU will determine the amount of local minutes to be billed to the other Party. For purposes of developing the PLU, each Party shall consider every local call and every long distance call, excluding intermediary traffic. By the first of January, April, July and October of each year, each Party shall provide a positive report updating the PLU. Requirements associated with PLU calculation and reporting shall be as set forth in BellSouth's Percent Local Use Reporting Guidebook, as it is amended from time to time. Notwithstanding the foregoing, where the terminating Party has message recording technology that identifies the jurisdiction of traffic terminated as defined in this Agreement, such information, in lieu of the PLU factor, shall at the terminating Party's option be utilized to determine the appropriate local usage compensation to be paid.

5.3 Percentage Interstate Usage. In the case where ACCESS Integrated desires to terminate its local traffic over or co-mingled on its switched access Feature Group D trunks, ACCESS Integrated will be required to provide a projected Percentage Interstate Usage ("PIU") to BellSouth. All jurisdictional report requirements, rules and regulations for Interexchange Carriers specified in BellSouth's Intrastate Access Services Tariff will apply to ACCESS Integrated. After interstate and intrastate traffic percentages have been determined by use of PIU procedures, the PLU factor will be used for application and billing of local interconnection. Notwithstanding the foregoing, where the terminating Party has message recording technology that identifies the jurisdiction of traffic terminated as defined in this Agreement, such information, in lieu of the PIU and PLU factor, shall at the terminating Party's option be utilized to determine the appropriate local usage compensation to be paid.

5.4 Audits. On thirty (30) days written notice, each Party must provide the other the ability and opportunity to conduct an annual audit to ensure the proper billing of traffic. BellSouth and ACCESS Integrated shall retain records of call detail for a minimum of nine months from which a PLU and/or PIU can be ascertained. The audit shall be accomplished during normal business hours at an office designated by the Party being audited. Audit requests shall not be submitted more frequently than one (1) time per calendar year. Audits shall be performed by a mutually acceptable independent auditory paid for by the Party requesting the audit. The PLU and/or PIU shall be adjusted based upon the audit results and shall apply to the usage for the quarter the audit was completed, to the usage for the quarter prior to the completion of the audit, and to the usage for the two quarters following the completion of the audit. If, as a result of an audit, either Party is found to have overstated the PLU and/or PIU by twenty percentage points (20%) or more, that Party shall reimburse the auditing Party for the cost of the audit.

5.5 Rate True-up

This section applies only to North Carolina and Tennessee and other rates that are interim or expressly subject to true-up under this attachment.

5.5.1 The interim prices for Unbundled Network Elements and Other Services and Local Interconnection shall be subject to true-up according to the following procedures:

5.5.2 The interim prices shall be trued-up, either up or down, based on final prices determined either by further agreement between the Parties, or by a final order (including any appeals) of the Commission which final order meets the criteria of (3) below. The Parties shall implement the true-up by comparing the actual volumes and demand for each item, together with interim prices for each item, with the final prices determined for each item. Each Party shall keep its own records upon which the true-up can be based, and any final payment from one Party to the other shall be in an amount agreed upon by the Parties based on such records. In the event of any disagreement as between the records or the Parties regarding the amount of such true-up, the Parties agree that the body having jurisdiction over the matter shall be called upon to resolve such differences, or the Parties may mutually agree to submit the matter to the Dispute Resolution process in accordance with the provisions of Section 12 of the General Terms and Conditions and Attachment 1 of the Agreement.

5.5.3 The Parties may continue to negotiate toward final prices, but in the event that no such agreement is reached within nine (9) months, either Party may petition the Commission to resolve such disputes and to determine final prices for each item. Alternatively, upon mutual agreement, the Parties may submit the matter to the Dispute Resolution Process set forth in the General Terms and Conditions of the Agreement, so long as they file the resulting Agreement with the Commission as a "negotiated agreement" under Section 252(e) of the Act.

5.5.4 A final order of this Commission that forms the basis of a true-up shall be the final order as to prices based on appropriate cost studies, or potentially may be a final order in any other Commission proceeding which meets the following criteria:

(a) BellSouth and CLEC is entitled to be a full Party to the proceeding;
(b) It shall apply the provisions of the federal Telecommunications Act of 1996, including but not limited to Section 252(d)(1) (which contains pricing standards) and all then-effective implementing rules and regulations; and,

(c) It shall include as an issue the geographic deaveraging of unbundled element prices, which deaveraged prices, if any are required by said final order, shall form the basis of any true-up.

5.6 Compensation for IntraLATA Toll Traffic

5.6.1 IntraLATA Toll Traffic. IntraLATA Toll Traffic is defined as any telephone call that is not local or switched access per this Agreement.

5.6.2 Compensation for intraLATA toll traffic. For terminating its intraLATA toll traffic on the other company's network, the originating Party will pay the terminating Party BellSouth's current intrastate or interstate, whichever is appropriate, terminating switched access tariff rates as set forth in BellSouth's Intrastate or Interstate Access Services Tariff. The appropriate charges will be determined by the routing of the call. If ACCESS Integrated is the BellSouth end user's presubscribed interexchange carrier or if the BellSouth end user uses ACCESS Integrated as an interexchange carrier on a 101XXXX basis, BellSouth will charge ACCESS Integrated the appropriate BellSouth tariff charges for originating switched access services.

5.6.3 Compensation for 8XX Traffic. Each Party shall compensate the other pursuant to the appropriate switched access charges, including the database query charge as set forth in the BellSouth intrastate or interstate switched access tariffs.

5.6.4 Records for 8XX Billing. Each Party will provide to the other the appropriate records necessary for billing intraLATA 8XX customers. The records provided will be in a standard EMI format for a fee of $0.013 per record.

5.6.5 8XX Access Screening. BellSouth's provision of 8XX TFD to ACCESS Integrated requires interconnection from ACCESS Integrated to BellSouth 8XX SCP. Such interconnections shall be established pursuant to BellSouth's Common Channel Signaling Interconnection Guidelines and Bellcore's CCS Network Interface Specification document, TR-TSV-000905. ACCESS Integrated shall establish CCS7 interconnection at the BellSouth Local Signal Transfer Points serving the BellSouth 8XX SCPs that ACCESS Integrated desires to query. The terms and conditions for 8XX TFD are set out in BellSouth's Intrastate Access Services Tariff as amended.

5.7 Mutual Provision of Switched Access Service

5.7.1 Switched Access Traffic. Switched Access Traffic is as defined in the BellSouth Access Tariff. Additionally, IP Telephony traffic will be considered switched access traffic.

5.7.2 When ACCESS Integrated's end office switch, subtending the BellSouth Access Tandem switch for receipt or delivery of switched access traffic, provides an access service connection to or from an interexchange carrier ("IXC") by either a direct trunk group to the IXC utilizing BellSouth facilities, or via BellSouth's tandem switch, each Party will provide its own access services to the IXC on a multi-bill, multi-tariff meet-point basis. Each Party will bill its own access services rates to the IXC with the exception of the interconnection charge. The interconnection charge will be billed by the Party providing the end office function. Each party will use the Multiple Exchange Carrier Access Billing (MECAB) system to establish meet point billing for all applicable traffic. Thirty (30)-day billing periods will be employed for these arrangements. The recording Party agrees to provide to the initial billing Party, at no charge, the switched access detailed usage data within no more than sixty (60) days after the recording date. The initial billing Party will provide the switched access summary usage data to all subsequent billing Parties within 10 days of rendering the initial bill to the IXC. Each Party will notify the other when it is not feasible to meet these requirements so that the customers may be notified for any necessary revenue accrual associated with the significantly delayed recording or billing. As business requirements change data reporting requirements may be modified as necessary.

5.7.3 Where either Party has been notified that the other Party has a Billing Guarantee Practice, each Party so notified (the Initial Billing Party or the recording Party) will be held liable for any access revenues which it has caused to be determined unbillable under the guidelines of such Billing Guarantee Practice of the other Party. Each Party will provide complete documentation to the other to substantiate any claim of unbillable access revenues. A negotiated settlement will be agreed upon between the Parties.

5.7.4 Each Party will retain for a minimum period of sixty (60) days, access message detail sufficient to recreate any data which is lost or damaged by their company or any third party involved in processing or transporting data.

5.7.5 Each Party agrees to recreate the lost or damaged data within forty-eight (48) hours of notification by the other or by an authorized third party handling the data.

5.7.6 Each Party also agrees to process the recreated data within forty-eight (48) hours of receipt at its data processing center.

5.7.7 All claims should be filed with the other Party within 120 days of the receipt of the date of the unbillable usage.

5.7.8 The Initial Billing Party shall keep records of its billing activities relating to jointly-provided Intrastate and Interstate access services in sufficient detail to permit the Subsequent Billing Party to, by formal or informal review or audit, to verify the accuracy and reasonableness of the jointly-provided access billing data

provided by the Initial billing Party. Each Party agrees to cooperate in such formal or informal reviews or audits and further agrees to jointly review the findings of such reviews or audits in order to resolve any differences concerning the findings thereof.

5.7.9 ACCESS Integrated agrees not to deliver switched access traffic to BellSouth for termination except over ACCESS Integrated ordered switched access trunks and facilities.

5.8 Transit Traffic Service. BellSouth shall provide tandem switching and transport services for ACCESS Integrated's transit traffic. Transit traffic is traffic originating on ACCESS Integrated's network that is switched and/or transported by BellSouth and delivered to a third party's network, or traffic originating on a third Party's network that is switched and/or transported by BellSouth and delivered to ACCESS Integrated's network . Rates for local transit traffic shall be the applicable call transport and termination charges as set forth in Exhibit A to this Attachment. Rates for intraLATA toll and Switched Access transit traffic shall be the applicable call transport and termination charges as set forth in BellSouth Interstate or Intrastate Switched Access tariffs. Switched Access transit traffic presumes that ACCESS Integrated's end office is subtending the BellSouth Access Tandem for switched access traffic to and from ACCESS Integrated's end users utilizing BellSouth facilities, either by direct trunks with the IXC, or via the BellSouth Access Tandem. Billing associated with all transit traffic shall be pursuant to Multiple Exchange Carrier Access Billing (MECAB) procedures. Wireless Type 1 traffic shall not be treated as transit traffic from a routing or billing perspective. Wireless Type 2A traffic shall not be treated as transit traffic from a routing or billing perspective until BellSouth and the Wireless carrier have the capability to properly meet-point-bill in accordance with MECAB guidelines.

5.8.1 The delivery of traffic which transits the BellSouth network and is transported to another carrier's network is excluded from any BellSouth billing guarantees and will be delivered at the rates stipulated in this Agreement to a terminating carrier. BellSouth agrees to deliver this traffic to the terminating carrier; provided, however, that ACCESS Integrated is solely responsible for negotiating and executing any appropriate contractual agreements with the terminating carrier for the receipt of this traffic through the BellSouth network. BellSouth will not be liable for any compensation to the terminating carrier or to ACCESS Integrated. ACCESS Integrated agrees to compensate BellSouth for any charges or costs for the delivery of transit traffic to a connecting carrier on behalf of ACCESS Integrated. Additionally, the Parties agree that any billing to a third party or other telecommunications carrier under this section shall be pursuant to MECAB procedures.

5.9 Interconnection with Enhanced Service Providers (ESPs)/Information Service Providers (ISPs). ESP/ISP traffic shall not be included in the interconnection compensation arrangements of this Agreement.

6. Frame Relay Service

6.1 In addition to the Local Interconnection services set forth above, BellSouth will offer a network to network Interconnection arrangement between BellSouth's and ACCESS Integrated's frame relay switches as set forth below. The following provisions will apply only to Frame Relay Service and Exchange Access Frame Relay Service in those states in which ACCESS Integrated is certified and providing Frame Relay Service as a Local Exchange Carrier and where traffic is being exchanged between ACCESS Integrated and BellSouth Frame Relay Switches in the same LATA.

6.2 The Parties agree to establish two-way Frame Relay facilities between their respective Frame Relay Switches to the mutually agreed upon Frame Relay Service point(s) of interconnection ("POI(s)") within the LATA. All POIs shall be within the same Frame Relay Network Serving Areas as defined in Section A40 of BellSouth's General Subscriber Service Tariff except as set forth in this Attachment.

6.3 Upon the request of either Party, such interconnection will be established where BellSouth and ACCESS Integrated have Frame Relay Switches in the same LATA. Where there are multiple Frame Relay switches in one central office, an interconnection with any one of the switches will be considered an interconnection with all of the switches at that central office for purposes of routing packet traffic.

6.4 The Parties agree to provision local and IntraLATA Frame Relay Service and Exchange Access Frame Relay Service (both intrastate and interstate) over Frame Relay interconnection facilities between the respective Frame Relay switches and the POIs.

6.5 The Parties agree to assess each other reciprocal charges for the facilities that each provides to the other according to the Percent Local Circuit Use Factor (PLCU), determined as follows:

6.5.1 If the data packets originate and terminate in locations in the same LATA, and consistent with the local definitions of the Agreement, the traffic is considered local. Frame Relay framed packet data is transported within Virtual Circuits (VC). For the purposes of this Agreement, if all the data packets transported within a VC remain within the LATA, then consistent with the local definitions in this Agreement, the traffic on that VC is local ("Local VC").

6.5.2 If the originating and terminating locations of the two way packet data traffic are not in the same LATA, the traffic on that VC is interLATA ("InterLATA VC").

6.5.3 The PLCU is determined by dividing the total number of Local VCs, by the total number of VCs on each Frame Relay facility. To facilitate implementation, ACCESS Integrated may determine its PLCU in aggregate, by dividing the total number of Local VCs in a given LATA by the total number VCs in that LATA. The Parties agree to renegotiate the method for determining PLCU, at BellSouth's request, and within 90 days, if BellSouth notifies ACCESS Integrated that it has found that this method does not adequately represent the PLCU.

6.5.4 If there are no VCs on a facility when it is billed, the PLCU will be zero.

6.5.5 BellSouth will provide the circuit between the Parties' respective Frame Relay Switches. The Parties will be compensated as follows: BellSouth will invoice, and ACCESS Integrated will pay, the total non-recurring and recurring charges for the circuit based upon the rates set forth in BellSouth's Interstate Access Tariff, FCC No. 1. ACCESS Integrated will then invoice, and BellSouth will pay, an amount calculated by multiplying the BellSouth billed charges for the circuit by one-half of ACCESS Integrated's PLCU.

6.6 The Parties agree to compensate each other for Frame Relay network-to-network interface (NNI) ports based upon the NNI rates set forth in BellSouth's Interstate Access Tariff, FCC No. 1. Compensation for each pair of NNI ports will be calculated as follows: BellSouth will invoice, and ACCESS Integrated will pay, the total non-recurring and recurring charges for the NNI port. ACCESS Integrated will then invoice, and BellSouth will pay, an amount calculated by multiplying the BellSouth billed non-recurring and recurring charges for the NNI port by ACCESS Integrated's PLCU.

6.7 Each Party agrees that there will be no charges to the other Party for its own subscriber's Permanent Virtual Circuit (PVC) rate elements for the local PVC segment from its Frame Relay switch to its own subscriber's premises. PVC rate elements include the Data Link Connection Identifier (DLCI) and Committed Information Rate (CIR).

6.8 For the PVC segment between the ACCESS Integrated and BellSouth Frame Relay switches, compensation for the PVC charges is based upon the rates in BellSouth's Interstate Access Tariff, FCC No. 1.

6.9 Compensation for PVC rate elements will be calculated as follows:

6.9.1 If ACCESS Integrated orders a VC connection between a BellSouth subscriber's PVC segment and a PVC segment from the BellSouth Frame Relay switch to the

ACCESS Integrated Frame Relay switch, BellSouth will invoice, and ACCESS Integrated will pay, the total non-recurring and recurring PVC charges for the PVC segment between the BellSouth and ACCESS Integrated Frame Relay switches. If the VC is a Local VC, ACCESS Integrated will then invoice and BellSouth will pay, the total nonrecurring and recurring PVC charges billed for that segment. If the VC is not local, no compensation will be paid to ACCESS Integrated for the PVC segment.

6.9.2 If BellSouth orders a Local VC connection between a ACCESS Integrated subscriber's PVC segment and a PVC segment from the ACCESS Integrated Frame Relay switch to the BellSouth Frame Relay switch, BellSouth will invoice, and ACCESS Integrated will pay, the total non-recurring and recurring PVC and CIR charges for the PVC segment between the BellSouth and ACCESS Integrated Frame Relay switches. If the VC is a Local VC, ACCESS Integrated will then invoice and BellSouth will pay the total non-recurring and recurring PVC and CIR charges billed for that segment. If the VC is not local, no compensation will be paid to ACCESS Integrated for the PVC segment.

6.9.3 The Parties agree to compensate each other for requests to change a PVC segment or PVC service order record, according to the Feature Change charge as set forth in the BellSouth access tariff BellSouth Tariff FCC No, 1.

6.9.4 If ACCESS Integrated requests a change, BellSouth will invoice and ACCESS Integrated will pay a Feature Change charge for each affected PVC segment.

6.9.4.1 If BellSouth requests a change to a Local VC, ACCESS Integrated will invoice and BellSouth will pay a Feature Change charge for each affected PVC segment.

6.9.5 The Parties agree to limit the sum of the CIR for the VCs on a DS1 NNI port to not more than three times the port speed, or not more than six times the port speed on a DS3 NNI port.

6.9.6 Except as expressly provided herein, this Agreement does not address or alter in any way either Party's provision of Exchange Access Frame Relay Service or interLATA Frame Relay Service. All charges by each Party to the other for carriage of Exchange Access Frame Relay Service or interLATA Frame Relay Service are included in the BellSouth access tariff BellSouth Tariff FCC No, 1.

6.10 ACCESS Integrated will identify and report quarterly to BellSouth the PLCU of the Frame Relay facilities it uses, per section 8.5.3 above.

6.11 Either Party may request a review or audit of the various service components, consistent with the provisions of section E2 of the BellSouth State Access Services tariffs or Section 2 of the BellSouth FCC No.1 Tariff.

6.12 If during the term of this Agreement, BellSouth obtains authority to provide interLATA Frame Relay in any State, the Parties agree to renegotiate this arrangement for the exchange of Frame Relay Service Traffic within one hundred eighty (180) days of the date BellSouth receives interLATA authority. In the event the Parties fail to renegotiate this Section 8 within the one hundred eighty day period, they will submit this matter to the appropriate State commission(s) for resolution.

7. Remote Access Server (RAS) Network Interconnection

7.1 The Parties agree that the Remote Access Server (RAS) is a specialized internet traffic concentration device designed to concentrate traffic to specific Internet Service Providers (ISPs), and as such is telecommunications equipment, but is not an end office switch or equivalent facility, and thus is not subject to call transport and termination requirements under FCC Rule 51.711.

7.2 The Parties further agree that the purpose of the ACCESS Integrated RAS service offering is to move Internet traffic off the Public Switched Telephone Network (PSTN) terminating end office switch.

7.3 ACCESS Integrated shall configure ACCESS Integrated's RAS device in such a manner as to eliminate the provisioning of enhanced services as defined by the Federal Communications Commission, such as but not limited to, user authentication, security, usage measurement, billing control and protocol conversion.

7.4 BellSouth agrees to deliver BellSouth originated and transit traffic intended for ACCESS Integrated's end users to ACCESS Integrated's RAS device pursuant to the terms and conditions of this Agreement.

7.5 NPA/NXX Code Assignment and Homing

7.5.1 ACCESS Integrated shall assign unique NPA/NXXs to ACCESS Integrated's RAS specifically for Internet traffic routing purposes.

7.5.2 ACCESS Integrated shall home its NPA/NXX(s) on the BellSouth Tandem serving the Exchange Rate Center to which ACCESS Integratedassigns ACCESS Integrated's RAS NPA/NXX(s). The specified association between BellSouth Tandems and Exchange Rate Center Areas is defined in the LERG.

7.6 Direct Trunks Between ACCESS Integrated's RAS And BellSouth End Offices

7.6.1 The Parties shall utilize direct end office to RAS trunks pursuant to the following conditions:

7.6.1.1 Tandem Exhaust - If a BellSouth tandem through which ACCESS Integrated is interconnected is unable to, or is forecasted to be unable to support additional traffic loads for any period of time, the Parties will mutually agree on an end office trunking plan that will alleviate the BellSouth tandem capacity shortage and ensure completion of traffic between ACCESS Integrated's and BellSouth's subscribers.

7.6.1.2 ACCESS Integrated agrees to order, install and retain direct end office to RAS trunks sufficient to handle actual and reasonably forecasted traffic exceeding a single DS1 of traffic per month.

7.6.1.3 ACCESS Integrated also agrees to order direct end office to RAS trunks within 30 days of a request by BellSouth if the end office traffic is exceeding or is forecasted to exceed a DS1 of traffic. If ACCESS Integrated does not order direct trunks within those 30 days, ACCESS Integrated agrees to pay to BellSouth, beginning the following month, the common transport, tandem switching and tandem shared trunk port per minute of use rates reflected in Exhibit A of this Agreement for traffic delivered to ACCESS Integrated's RAS via BellSouth's tandem switch until such direct trunks are activated.

7.6.1.4 ACCESS Integrated shall install additional capacity between BellSouth end offices and ACCESS Integrated's RAS devices when overflow traffic between end offices and a RAS device exceeds or is reasonably forecasted to exceed a single DS1 of traffic per month.

7.6.1.5 The Parties may install direct end office to RAS trunks upon mutual agreement.

7.7 Trunks Between a RAS and Tandem Switches

7.7.1 Pursuant to the preceding paragraphs regarding direct trunks between a RAS and the originating end offices, the ACCESS Integrated agrees to order, install and retain trunking to the BellSouth tandem switch sufficient to handle actual and forecasted traffic volumes routed to ACCESS Integrated's RAS via the BellSouth tandem.

7.7.2 ACCESS Integrated shall order and establish the necessary trunk groups to each BellSouth tandem switch on which ACCESS Integrated has homed ACCESS Integrated NPA/NXXs for transit traffic and traffic between ACCESS Integrated and BellSouth and as defined in the LERG.

7.7.3 A **RAS Point of Interface** is the physical telecommunications interface between BellSouth and ACCESS Integrated's interconnection functions. It establishes the

technical interface and point of operational responsibility. The primary function of the RAS Point of Interface is to serve as the terminus for the interconnection service.

7.7.3.1 At a minimum, ACCESS Integrated must establish a RAS Point Of Interface at each BellSouth access tandem serving an Exchange Rate Center to which ACCESS Integrated has assigned a RAS NPA/NXX in the LATA.

7.7.3.2 ACCESS Integrated agrees to establish, within four months of a request of BellSouth, a Point Of Interface at a BellSouth end office or tandem switch location where the traffic to ACCESS Integrated's RAS has reached or is forecasted to reach one DS3 or more within six months.

7.7.3.3 The RAS Point of Interface has the following main characteristics:

7.7.3.3.1 It is a cross-connect point to allow connection, disconnection, transfer or restoration of service.

7.7.3.3.2 It is a point where BellSouth and ACCESS Integrated can verify and maintain specific performance objectives.

7.7.3.3.3 It is specified according to the interface offered in the tariff or interconnection Agreement (for example: for DS1 service, the FCC # 1 tariff specifies that the interface meets the technical specifications detailed in Generic Requirements GR-342-CORE, Issue 1, December 1995.)

7.7.3.3.4 The Parties provide their own equipment (CPE) to interface with the DS0, DS1, DS3, STS1 and/or OCn circuits on the customer premises.

7.7.4 The **RAS Point of Interconnection** is the trunk group termination location at which BellSouth delivers BellSouth originated traffic to the ACCESS Integrated's RAS on ACCESS Integrated's network. ACCESS Integrated's requested Point of Interconnection shall also be used for the receipt of transit trunk groups for transit traffic at BellSouth Access and/or Local Tandems pursuant to the terms and conditions of this Agreement. Points of Interconnection established at the BellSouth Local Tandem apply only to local traffic and local originating transit traffic as defined by BellSouth.

7.7.5 Pursuant to the terms and conditions in this Agreement, BellSouth agrees to deliver BellSouth originating traffic to ACCESS Integrated's RAS Points of Interface as established by ACCESS Integrated. A Point of Interface may not necessarily be established at a Point of Interconnection.

7.7.6 ACCESS Integrated agrees to compensate BellSouth for transport and switching functions performed by BellSouth at the rates reflected in Exhibit A to this

Agreement, including third party transit traffic, delivered to ACCESS Integrated's RAS Point Of Interface.

7.7.7 Exhibit A Switching and Transport rates will apply when the BellSouth Rate Center with which ACCESS Integrated has associated its RAS NPA/NXX is not local, pursuant to BellSouth's flat rated Extended Area Service (EAS) A3 tariffs, to the BellSouth Rate Center in which ACCESS Integrated has placed ACCESS Integrated's RAS device.

7.7.8 ACCESS Integrated shall not deliver switched access traffic to BellSouth via ACCESS Integrated's RAS interconnection with BellSouth.

7.7.9 BellSouth shall not pay reciprocal compensation to ACCESS Integrated for traffic delivered to ACCESS Integrated's RAS.

7.7.10 Compensation for Switched Access transit traffic shall be pursuant to the **Mutual Provision of Switched Access Service** section of this Agreement. Internet Protocol (IP) Telephony traffic shall be considered and treated as switched access traffic by both parties.

8. Operational Support Systems (OSS) Rates

8.1 BellSouth has developed and made available the following mechanized systems by which ACCESS Integrated may submit LSRs electronically.

LENS	Local Exchange Navigation System
EDI	Electronic Data Interface
TAG	Telecommunications Access Gateway

8.2 LSRs submitted by means of one of these interactive interfaces will incur an OSS electronic ordering charge as specified in the table below. An individual LSR will be identified for billing purposes by its Purchase Order Number (PON). LSRs submitted by means other than one of these interactive interfaces (mail, fax, courier, etc.) will incur a manual order charge as specified in the table below:

OPERATIONAL SUPPORT SYSTEMS	**AL, GA, LA, MS, SC**	**FL, KY, NC, TN**
OSS **LSR** charge, per LSR received from the CLEC by one of the OSS interactive interfaces	$3.50 SOMEC	$3.50 SOMEC
Incremental charge per LSR received from the CLEC by means other than one of the OSS interactive interfaces	See applicable rate element	$19.99 SOMAN

Note: In addition to the OSS charges, applicable discounted service order and related discounted charges apply per the tariff.

8.3 Denial/Restoral OSS Charge

In the event ACCESS Integrated provides a list of customers to be denied and restored, rather than an LSR, each location on the list will require a separate PON and, therefore will be billed as one LSR per location.

8.4 Cancellation OSS Charge

ACCESS Integrated will incur an OSS charge for an accepted LSR that is later canceled by ACCESS Integrated.

Note: Supplements or clarifications to a previously billed LSR will not incur another OSS charge.

8.5 Network Elements and Other Services Manual Additive

The Commissions in Alabama, Georgia, Louisiana, Mississippi and South Carolina have ordered incremental manual non-recurring charges (NRC) for Network Elements and Other Services ordered by means other than one of the interactive interfaces. These ordered Network Elements and Other Services manual additive NRCs will apply in these states, rather than the charge per LSR.

8.6 Threshold Billing Plan

8.6.1 The Parties agree that ACCESS Integrated will incur the mechanized rate for all LSRs, both mechanized and manual, if the percentage of mechanized LSRs to total LSRs **meets or** exceeds the threshold percentages shown below:

Year	Ratio: Mechanized/Total LSRs
2000	80%
2001	90%

The threshold plan will be discontinued in 2002.

8.6.2 BellSouth will track the total LSR volume for each CLEC for each quarter. At the end of that time period, a Percent Electronic LSR calculation will be made for that quarter based on the LSR data tracked in the LCSC. If this percentage exceeds the threshold volume, all of that CLECs' future manual LSRs will be billed at the mechanized LSR rate. To allow time for obtaining and analyzing the data and updating the billing system, this billing change will take place on the first day of the second month following the end of the quarter (e.g. May 1 for 1Q, Aug 1 for 2Q, etc.). There will be no adjustments to the amount billed for previously billed LSRs.

Basic Architecture

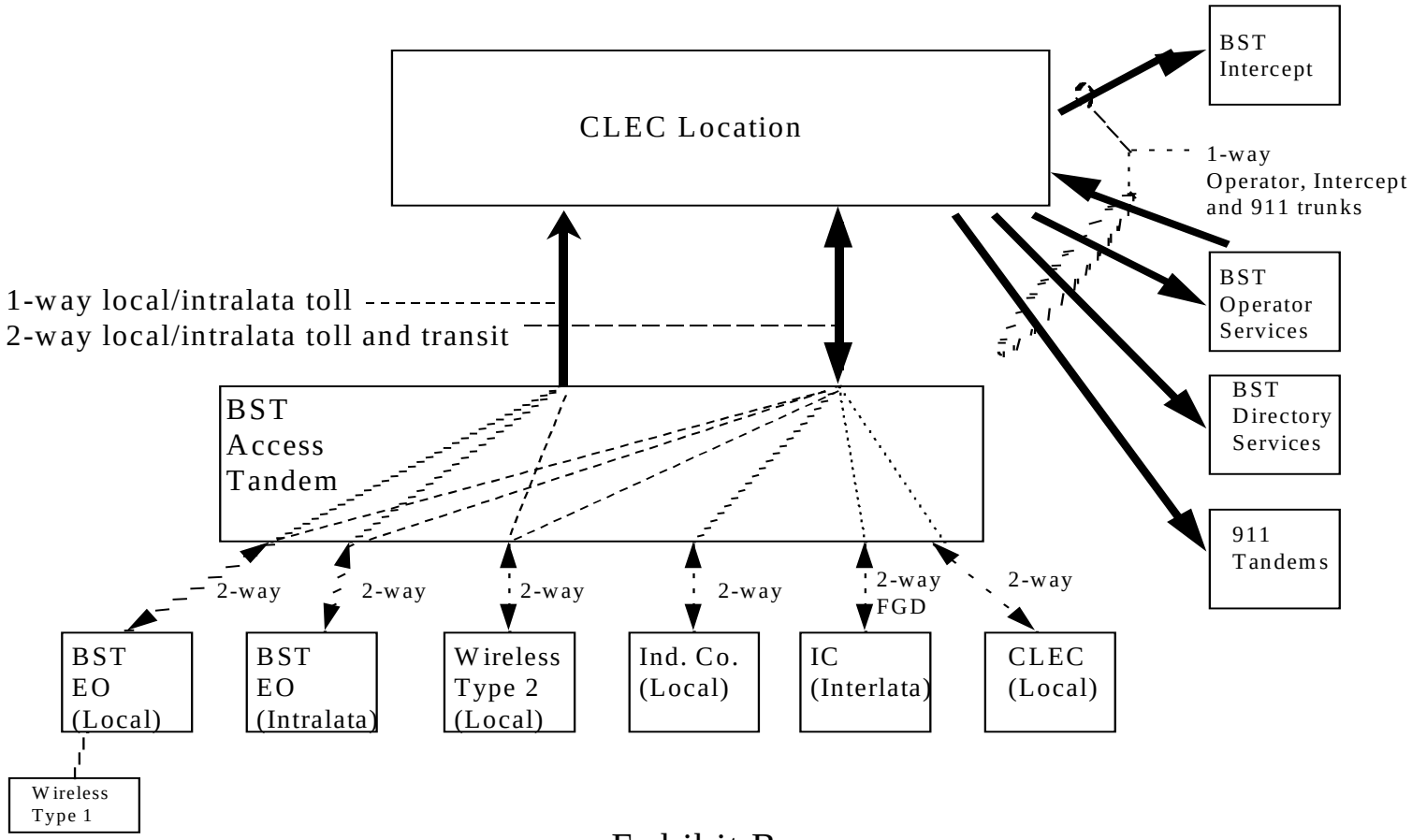

Exhibit B

One-Way Trunking Architecture

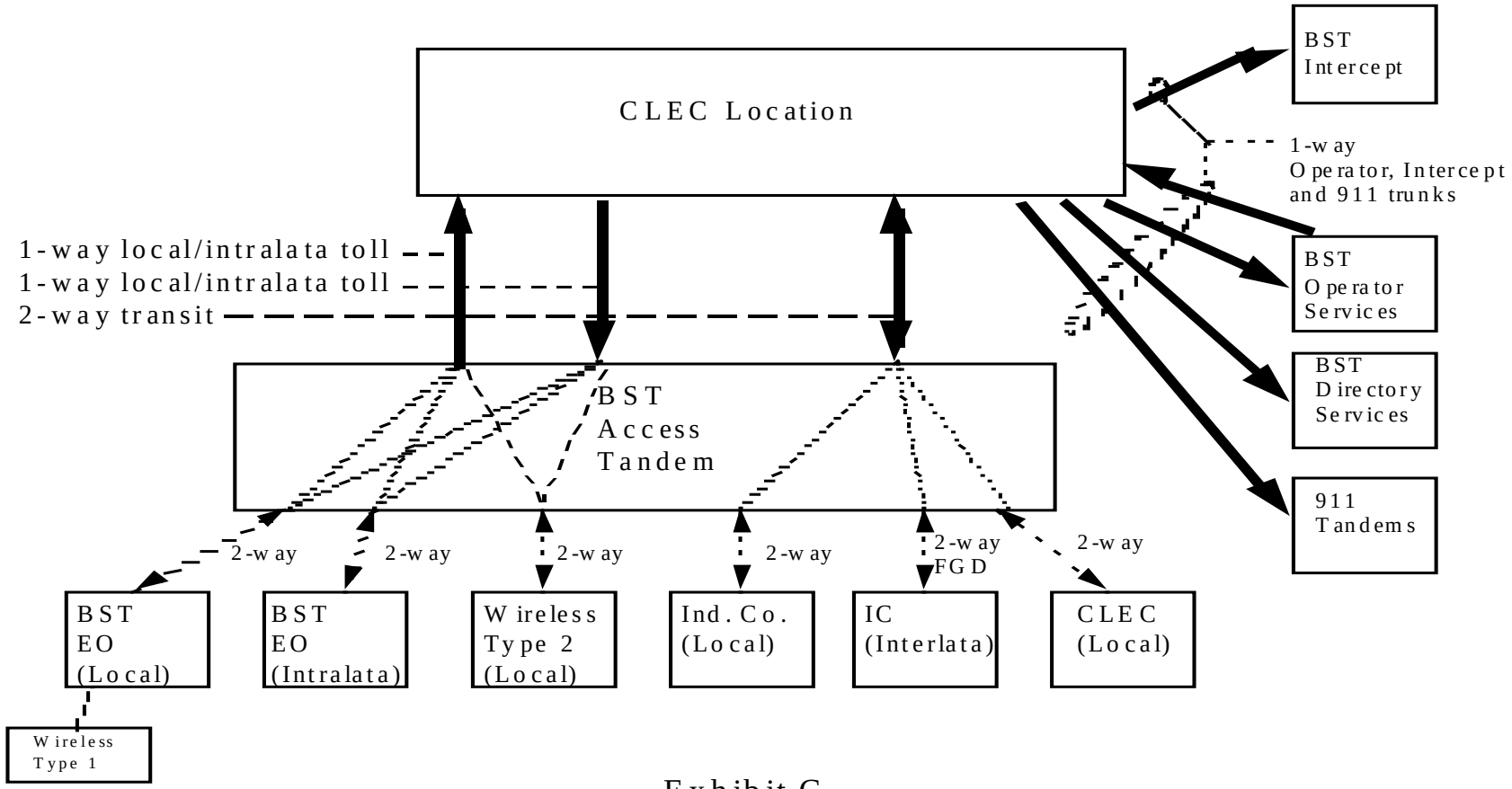

Exhibit C

Two-Way Trunking Architecture

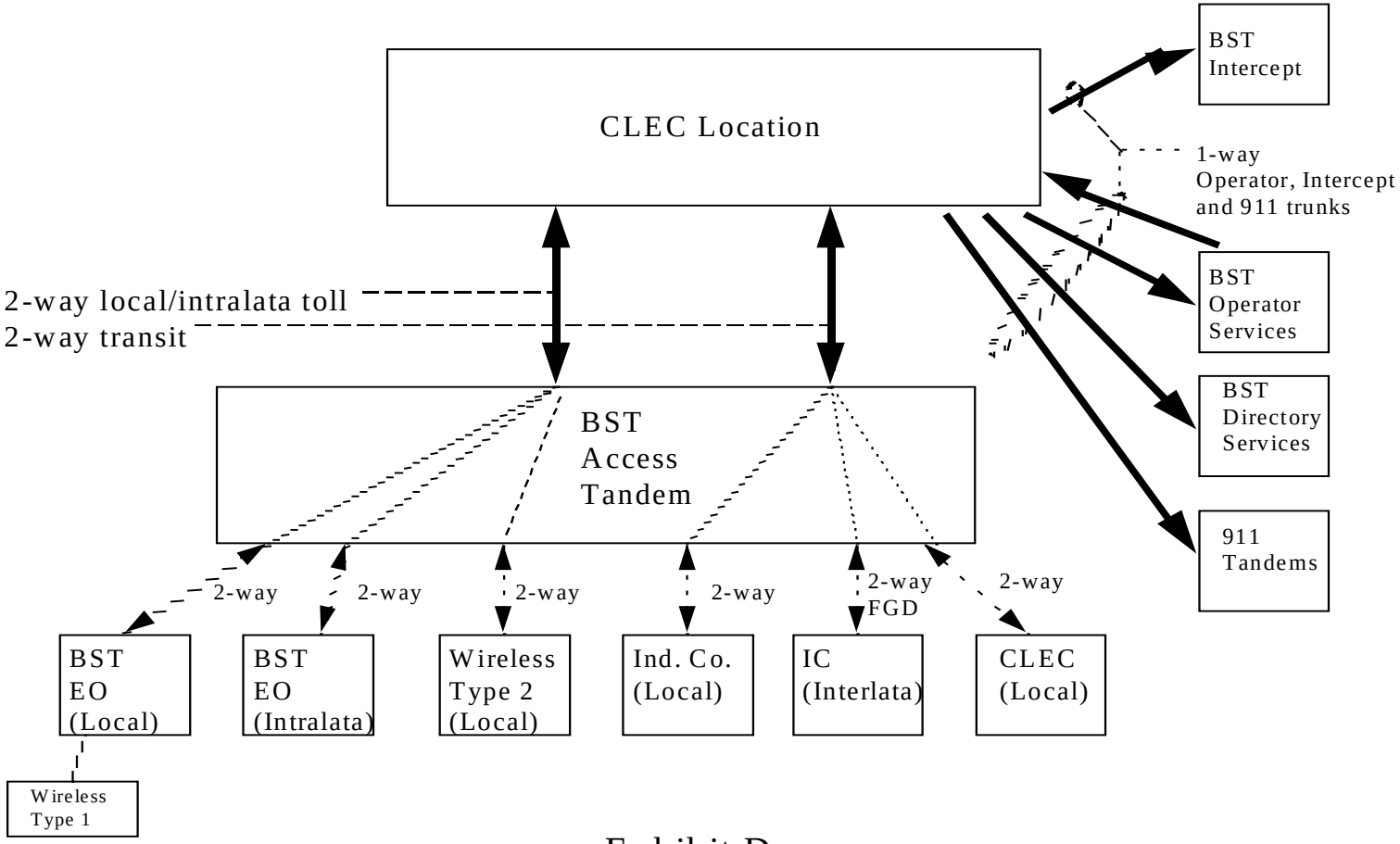

Exhibit D

SuperGroup Architecture

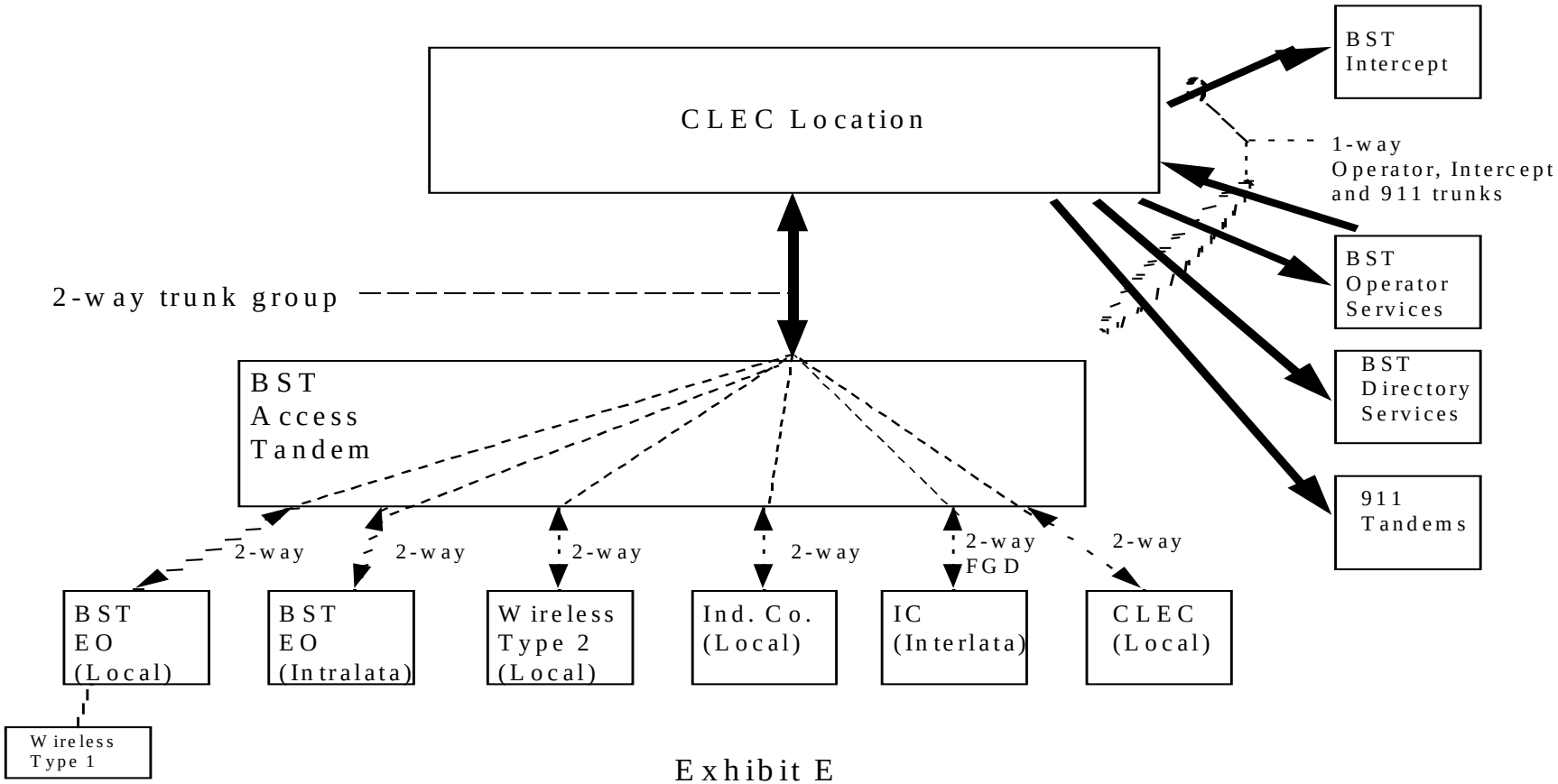

Exhibit E

BELLSOUTH/ACCESS INTEGRATED RATES
LOCAL INTERCONNECTION

DESCRIPTION	USOC	RATES BY STATE AL	FL	GA	KY	LA	MS	NC	SC
LOCAL INTERCONNECTION (CALL TRANSPORT AND TERMINATION)									
End Office Switching, per mou	N/A	$0.0018	NA	$0.0016333	$0.002562	NA	$0.0023771	$0.0017	$0.0019295
Direct Local Interconnection, per mou (same as End Office Switching in FL & LA)		NA	$0.002	NA	NA	$0.00209	NA	NA	NA
Tandem Switching, per mou	N/A	$0.00063	$0.00029	$0.0006757	$0.001096	NA	$0.0007834	$0.0009	$0.0006843
Tandem Switching (assumes 5 miles of transport per mou)	N/A	NA	NA	NA	NA	$0.00430	NA	NA	NA
Tandem Local Interconnection, per mou (includes end office switching element)		NA	$0.00325	NA	NA	$0.00639	NA	NA	NA
Multiple Tandem Switching, per mou (applies to initial tandem only), effective 10/99		NA	$0.00125	NA	NA	$0.00430	NA	NA	NA
Local Intermediary, per mou (applies to transit traffic only)		NA	$0.00125	NA	NA	$0.00430	NA	NA	NA
Tandem Intermediary Charge, per mou*	N/A	$0.0015	NA	NA	$0.001096	NA	NA	NA	NA
*(This charge is applicable only to transit traffic and is applied in addition to applicable switching and/or interconnection charges.)									
TRUNK PORT CHARGE									
All terms and conditions, as well as charges, both non-recurring and recurring, associated with interconnecting trunk groups between BellSouth and CLEC-1 shall be as set forth in Section E.6 of the appropriate BellSouth intrastate access tariff. At such time as BellSouth develops a cost based rate for such interconnecting trunk groups, the Parties shall amend this agreement to include such cost based rates and shall true up such charges in accordance with this Attachment.		BST State Access Tariff Rates	BST State Access Tariff Rates	BST State Access Tariff Rates	BST State Access Tariff Rates	BST State Access Tariff Rates	BST State Access Tariff Rates	BST State Access Tariff Rates	BST State Access Tariff Rates
INTEROFFICE TRANSPORT									
Common (Shared) Transport									
Common (Shared) Transport per mile per mou	N/A	$0.00001	$0.000012	$0.000008	$0.0000049	$0.0000083	$0.0000091	$0.00001	$0.0000121
Common (Shared) Transport Facilities Termination per mou	N/A	$0.00045	$0.0005	$0.0004152	$0.000426	$0.00047	$0.0004281	$0.00034	$0.0004672
Interoffice Channel Transport - Dedicated - VG									
Interoffice Transport - Dedicated - 2-Wire VG - per mile	1L;5XF	$0.03390	NA	$0.0222	NA	$0.0384	NA	$0.0282	$0.0373
Interoffice Transport - Dedicated - 2-Wire VG - facilities termination per month	1L;5XF	$18.49	NA	$17.07	NA	$19.10	NA	$18.00	$21.42
NRC - 1st	1L;5XF	$144.27	NA	$79.61	NA	$104.23	NA	$137.48	$136.44
NRC - Add'l	1L;5XF	$54.15	NA	$36.08	NA	$39.91	NA	$52.58	$51.37
NRC - Incremental Charge - Manual Service Order - 1st	SOMAC	$40.34	NA	$18.94	NA	$26.20	NA	$38.07	$39.63
NRC - Incremental Charge - Manual Service Order - Add'l	SOMAC	$40.54	NA	$18.94	NA	$26.20	NA	$38.07	$39.63
Interoffice Channel Transport - Dedicated - VG - Kentucky & Mississippi									
Interoffice Transport - Dedicated - 2-Wire VG - per mile	1L5NF	NA	NA	NA	$0.03	NA	$0.0323	NA	NA
Interoffice Transport - Dedicated - 2-Wire VG - facilities termination per month	1L5NF	NA	NA	NA	$27.66	NA	$21.33	NA	NA
NRC - Facility Termination -1st	1L5NF	NA	NA	NA	$142.31	NA	$144.77	NA	NA
NRC - Facility Termination - Add'l	1L5NF	NA	NA	NA	$56.21	NA	$56.06	NA	NA
NRC - Incremental Charge--Manual Svc Order - 1st	SOMAC	NA	NA	NA	$37.21	NA	$36.86	NA	NA
NRC - Incremental Charge--Manual Svc Order - Add'l	SOMAC	NA	NA	NA	$37.21	NA	$36.86	NA	NA
Interoffice Channel Transport - Dedicated - DS0 - 56/64 KBPS									
Interoffice Transport - Dedicated - DS0 - per mile per month	1L5XK	$0.0339	$0.0252	$0.0222	NA	$0.0384	NA	$0.0282	$0.0373
Interoffice Transport - Dedicated - DS0 - facility termination per month	1L5XK	$17.81	$21.33	$16.45	NA	$18.37	NA	$17.40	$20.71
NRC - 1st	1L5XK	$144.27	$137.15	$79.61	NA	$104.23	NA	$137.48	$136.44
NRC - Add'l	1L5XK	$54.15	$64.45	$36.08	NA	$39.91	NA	$52.58	$51.37
NRC - Incremental Charge - Manual Service Order - 1st	SOMAC	$40.34	NA	$18.94	NA	$26.20	NA	$38.07	$39.63
NRC - Incremental Charge - Manual Service Order - Add'l	SOMAC	$40.34	NA	$18.94	NA	$26.20	NA	$38.07	$39.63

BELLSOUTH/ACCESS INTEGRATED RATES
LOCAL INTERCONNECTION

DESCRIPTION	USOC	RATES BY STATE							
		AL	FL	GA	KY	LA	MS	NC	SC
Interoffice Transport - Dedicated - DS0 - 56/64 KBPS - Kentucky & Mississippi									
DS0 - per mile	1L5NK	NA	NA	NA	$0.03	NA	$0.0323	NA	NA
DS0 - Facility Termination	1L5NK	NA	NA	NA	$26.95	NA	$20.64	NA	NA
NRC - Facility Termination - 1st	1L5NK	NA	NA	NA	$142.31	NA	$144.77	NA	NA
NRC - Facility Termination - Add'l	1L5NK	NA	NA	NA	$56.21	NA	$56.06	NA	NA
NRC - Incremental Charge--Manual Svc Order - 1st	SOMAC	NA	NA	NA	$37.21	NA	$36.86	NA	NA
NRC - Incremental Charge--Manual Svc Order - Add'l	SOMAC	NA	NA	NA	$37.21	NA	$36.86	NA	NA
Interoffice Channel Transport - Dedicated - DS1									
Interoffice Transport - Dedicated - DS1 - per mile per month	1L5XL	$0.69	$0.6013	$0.4523	NA	$0.7831	NA	$0.5753	$0.7598
Interoffice Transport - Dedicated - DS1 - facility termination per month	1L5XL	$79.69	$99.79	$78.47	NA	$93.40	NA	$71.29	$94.98
NRC - 1st	1L5XL	$223.59	$45.91	$147.07	NA	$160.49	NA	$217.17	$216.27
NRC - Add'l	1L5XL	$168.60	$44.18	$111.75	NA	$123.03	NA	$163.75	$162.70
NRC - Incremental Charge - Manual Service Order - 1st	SOMAC	$40.34	NA	$18.94	NA	$26.20	NA	$38.07	$39.63
NRC - Incremental Charge - Manual Service Order - Add'l	SOMAC	$40.34	NA	$18.94	NA	$26.20	NA	$38.07	$39.63
Interoffice Channel Transport - Dedicated - DS1 - Kentucky & Mississippi									
Interoffice Transport - Dedicated - DS1 - per mile per month	1L5NL	NA	NA	NA	$0.45	NA	$0.6598	NA	NA
Interoffice Transport - Dedicated - DS1 - facilities termination per month	1L5NL	NA	NA	NA	$55.05	NA	$74.40	NA	NA
NRC - Facility Termination - 1st	1L5NL	NA	NA	NA	$298.18	NA	$222.81	NA	NA
NRC - Facility Termination - Add'l	1L5NL	NA	NA	NA	$231.23	NA	$168.92	NA	NA
NRC - Incremental Charge--Manual Svc Order - 1st	SOMAC	NA	NA	NA	NA	NA	$36.83	NA	NA
NRC - Incremental Charge--Manual Svc Order - Add'l	SOMAC	NA	NA	NA	NA	NA	$36.86	NA	NA
Interoffice Channel Transport - Dedicated - DS3									
Interoffice Transport - Dedicated - DS3 - per mile per month	1L5XM	$12.56	$10.22	$6.53	NA	$14.04	NA	$12.98	$19.08
Interoffice Transport - Dedicated - DS3 - facility termination per month	1L5XM	$771.60	$984.55	$725.53	NA	$1,101.00	NA	$720.38	$960.82
NRC - 1st	1L5XM	$961.93	$772.93	$778.80	NA	$713.57	NA	$794.94	$941.07
NRC - Add'l	1L5XM	$532.45	$435.92	$439.62	NA	$404.36	NA	$579.55	$503.72
NRC - Incremental Charge - Manual Service Order - 1st	SOMAC	$100.19	NA	$77.41	NA	$71.19	NA	$91.26	$92.52
NRC - Incremental Charge - Manual Service Order - Add'l	SOMAC	$100.19	NA	$77.41	NA	$71.19	NA	$91.26	$92.52
Interoffice Channel Transport - Dedicated - DS3 - Kentucky & Mississippi									
Interoffice Channel Transport - Dedicated - DS3 - per mile									
Interoffice Transport - Dedicated - DS3 - facility termination per month	1L5NM	NA	NA	NA	$12.62	NA	$15.02	NA	NA
NRC - DS3 - Facility Termination -1st	1L5NM	NA	NA	NA	$1,204.00	NA	$744.38	NA	NA
NRC - DS3 - Facility Termination - Add'l	1L5NM	NA	NA	NA	$946.23	NA	$812.30	NA	NA
NRC - Incremental Charge--Manual Svc Order - 1st	SOMAC	NA	NA	NA	$516.89	NA	$596.55	NA	NA
NRC - Incremental Charge--Manual Svc Order - Add'l	SOMAC	NA	NA	NA	$93.12	NA	$64.97	NA	NA
Local Channel - Dedicated									
Local Channel - Dedicated - 2-Wire VG									
Monthly Recurring	TEFV2	$14.61	$18.02	$13.91	$22.26	$14.94	$17.83	$14.82	$16.83
NRC - 1st	TEFV2	$572.46	$477.33	$382.95	$597.14	$401.17	$565.31	$553.80	$554.00
NRC - Add'l	TEFV2	$92.07	$124.32	$62.40	$110.52	$66.35	$93.30	$86.69	$88.58
NRC - Incremental Charge - Manual Service Order - 1st	SOMAC	$45.12	NA	$18.94	$41.46	$29.54	$41.57	$42.17	$43.75
NRC - Incremental Charge - Manual Service Order - Add'l	SOMAC	$18.73	NA	$8.42	NA	$19.46	$27.39	$12.76	$13.55
Local Channel - Dedicated - 4-Wire VG									
Monthly Recurring	TEFV4	$15.77	$19.01	$14.99	$23.38	$16.21	$19.03	$15.87	$18.05
NRC - 1st	TEFV4	$581.14	$477.33	$368.44	$585.15	$407.11	$573.83	$562.23	$562.46
NRC - Add'l	TEFV4	$95.21	$124.32	$64.05	$98.53	$68.61	$96.40	$92.67	$91.57

BELLSOUTH/ACCESS INTEGRATED RATES
LOCAL INTERCONNECTION

DESCRIPTION	USOC	RATES BY STATE							
		AL	FL	GA	KY	LA	MS	NC	SC
NRC - Incremental Charge - Manual Service Order - 1st	SOMAC	$45.12	NA	$18.94	$98.53	$29.54	$41.57	$42.17	$43.64
NRC - Incremental Charge - Manual Service Order - Add'l	SOMAC	$18.73	NA	$8.42	$11.99	$19.46	$27.39	$12.76	$13.55
Local Channel - Dedicated - DS1									
Monthly Recurring	TEFHG	$35.52	$44.35	$38.36	$43.80	$43.80	$38.91	$35.68	$37.20
NRC - 1st	TEFHG	$549.85	$246.50	$356.15	$538.95	$396.86	$588.53	$534.48	$534.81
NRC - Add'l	TEFHG	$475.02	$230.49	$312.89	$464.94	$342.92	$501.32	$462.69	$462.81
NRC - Incremental Charge - Manual Service Order - 1st	SOMAC	$91.22	NA	$44.22	$87.71	$61.82	$81.30	$42.17	$87.99
NRC - Incremental Charge - Manual Service Order - Add'l	SOMAC	NA	NA	NA	NA	NA	NA	$12.76	$3.11
Local Channel - Dedicated – DS3									
Monthly Recurring	TEFHJ	$559.98	$630.65	$558.51	$697.89	$696.07	$533.33	$498.87	$602.18
NRC - 1st	TEFHJ	$1,106.14	$879.42	$882.03	$1,091.00	$811.30	$569.08	$562.25	$1,091.00
NRC - Add'l	TEFHJ	$676.66	$542.41	$545.85	$661.23	$502.09	$534.58	$527.88	$654.13
NRC - Incremental Charge - Manual Service Order - 1st	SOMAC	$100.19	NA	$77.41	$93.12	$71.19	$56.84	$56.25	$92.52
NRC - Incremental Charge - Manual Service Order - Add'l	SOMAC	$100.19	NA	$77.41	$93.12	$71.19	$56.84	$56.25	$92.52
CHANNELIZATION									
DS3 Channelization (DS3 to DS1)									
per Channelized System per month	SATCS	$210.87	$213.22	$173.51	$236.32	$245.84	$229.30	$226.81	$204.07
NRC - 1st	SATCS	$355.25	$280.12	$284.43	$425.41	$259.76	$356.80	$351.95	$423.77
NRC - Add'l	SATCS	$245.86	$196.07	$199.98	$303.33	$182.64	$247.40	$243.76	$295.21
NRC -1sr - Disconnect	SATCS	$78.43	$64.06	$66.76	NA	$60.96	$79.94	$77.90	NA
NRC -Add'l - Disconnect	SATCS	$63.70	$52.60	$55.25	NA	$50.46	$65.20	$63.32	NA
NRC - Channel System - Incremental Cost - Manual Svc. Order -1st	SOMAC	$28.44	NA	$21.61	$41.47	$19.74	$26.95	$28.13	$43.41
NRC - Channel System - Incremental Cost - Manual Svc. Order - Add'l	SOMAC	$13.47	NA	$9.61	NA	$8.77	$11.98	$13.33	$15.36
NRC - Channel System - Incremenatl Cost - Manual Svc. Order - Disconnect - 1st	SOMAC	$18.46	NA	$13.61	NA	$12.43	$16.97	$18.26	NA
NRC - Channel System - Incremenatl Cost - Manual Svc. Order - Disconnect - Add	SOMAC	$1.50	NA	NA	NA	NA	NA	$1.48	NA
per Interface per month	SATCO	$4.53	$6.31	$7.13	$8.52	$7.55	$5.58	$4.61	$9.69
NRC - 1st	SATCO	$15.85	$13.39	$13.45	$15.86	$12.29	$15.85	$15.76	$15.54
NRC - Add'l	SATCO	$11.35	$9.59	$9.63	$11.36	$8.80	$11.35	$11.28	$11.13
DS1 Channelization (DS1 to DS0)									
per Channelized System per month	SATC1	$139.58	$163.88	$137.97	$200.01	$209.87	$146.87	$177.72	$179.81
NRC - 1st	SATC1	$269.98	$208.64	$212.01	$302.82	$193.63	$271.52	$267.19	$304.00
NRC - Add'l	SATC1	$163.04	$126.61	$129.60	$184.20	$118.37	$164.56	$161.43	$178.92
NRC -1sr - Disconnect	SATC1	$34.88	$26.42	$28.95	NA	$26.44	$36.38	$34.55	NA
NRC -Add'l - Disconnect	SATC1	$21.32	$15.95	$18.43	NA	$16.83	$22.82	$21.14	NA
NRC - Channel System - Incremental Cost - Manual Svc. Order -1st	SOMAC	$28.44	NA	$21.61	$41.47	$19.74	$26.95	$28.13	$43.41
NRC - Channel System - Incremental Cost - Manual Svc. Order -Add'l	SOMAC	$13.47	NA	$9.61	$11.99	$8.77	$11.98	$13.33	$15.36
NRC - Channel System - Incremental Cost - Manual Svc. Order - Disconnect -1st	SOMAC	$18.46	NA	$13.61	NA	$12.43	$16.97	$18.26	NA
NRC - Channel System - Incremental Cost - Manual Svc. Order - Disconnect -Add	SOMAC	$1.50	NA	NA	NA	NA	NA	$1.48	NA
DS1 Channization Interfaces									
per OCU-DP(data) card per month(2.4-64kbps)	SATSA	$2.61	$3.13	$2.65	$2.94	$3.12	$2.86	$2.88	$3.36
NRC - 1st	SATSA	$15.85	$13.39	$13.45	$15.86	$12.29	$15.85	$15.76	$15.54
NRC - Add'l	SATSA	$11.35	$9.59	$9.63	$11.36	$8.80	$11.35	$11.28	$11.13
per VG card per month	SATSA	$1.26	$1.78	$1.48	$1.40	$1.62	$1.45	$1.64	$1.93
NRC - 1st	SATSA	$15.85	$13.39	$13.45	$15.86	$12.29	$15.85	$15.76	$15.54
NRC - Add'l	SATSA	$11.35	$9.59	$9.63	$11.36	$8.80	$11.35	$11.28	$11.13
Local Interconnection Mid-Span Meet									
Local Channel - Dedicated - DS1									

BELLSOUTH/ACCESS INTEGRATED RATES
LOCAL INTERCONNECTION

DESCRIPTION	USOC	RATES BY STATE AL	FL	GA	KY	LA	MS	NC	SC
DS1 Monthly Recurring per month	TEFHG	$17.76	$22.18	$19.18	$21.90	$21.90	$19.46	$17.85	$18.60
NRC - DS1 - 1st	TEFHG	$251.79	$123.25	$178.08	$269.48	$174.28	$247.42	$268.83	$267.41
NRC - DS1 - Add'l	TEFHG	$221.42	$115.25	$156.45	$232.47	$150.15	$217.64	$232.73	$231.41
NRC - DS1 - Disconnect Chg - 1st	TEFHG	$23.14	NA	NA	NA	$12.08	$23.43	NA	NA
NRC - DS1 - Disconnect Chg - Add'l	TEFHG	$16.09	NA	NA	NA	$10.66	$16.51	NA	NA
NRC - DS1 - Incremental Charge--Manual Svc Order - 1st	SOMAC	$61.95	NA	$44.22	$87.71	$42.34	$59.58	$623.92	$87.99
NRC - DS1 - Incremental Charge--Manual Svc Order - Add'l	SOMAC	$0.00	NA	NA	NA	NA	NA	$467.22	$3.11
NRC - DS1 - Incremental Charge--Manual Svc Order-Disconnect	SOMAC	$29.27	NA	NA	NA	$19.48	$27.51	NA	NA
Rates For CLEC-1 Remote Access Concentrator (RAS) Interconnection									
Port Termination charges apply in all cases									
Per DS1 Port Termination:									
Monthly Recurring Per DS1:	TBD	$133.89	$133.14	$150.86	$150.11	$162.95	$133.22	$147.71	$146.06
Non-recurring per DS1:									
Non-recurring initial DS1	TBD	$223.59	$147.07	$298.18	$160.49	$222.81	$218.28	$216.27	$166.53
Non-recurring per additional DS1	TBD	$168.60	$111.75	$231.23	$123.03	$168.92	$164.55	$162.70	$124.84
NRC - Incremental Charge - Manual Service Order - 1st	TBD	$40.34	$18.94	NA	$26.20	$36.83	$38.12	$39.63	$30.15
NRC - Incremental Charge - Manual Service Order - Add'l	TBD	$40.34	$18.94	NA	$26.20	$36.86	$38.12	$39.63	$31.63
Per DS3 Port Termination:									
Total Monthly Recurring per DS3:	TBD	$4,130.93	$4,178.21	$4,687.59	$4,794.16	$5,105.69	$4,237.73	$4,666.49	$4,611.99
Total Non-recurring per DS3:									
Non-recurring initial DS3	TBD	$961.93	$778.80	$946.23	$713.57	$812.30	$798.95	$941.07	$729.27
Non-recurring per additional DS3	TBD	$532.45	$439.62	$516.89	$404.36	$596.55	$582.33	$503.72	$411.98
NRC - Incremental Charge - Manual Service Order - 1st	TBD	$100.19	$77.41	$93.12	$71.19	$64.97	$91.37	$92.52	$75.98
NRC - Incremental Charge - Manual Service Order - Add'l	TBD	$100.19	$77.41	$93.12	$71.19	$64.97	$91.37	$92.52	$75.98
See Channelization rates in this Exhibit.									
Switching and Transport:									
In addition to Port Termination charges, these charges apply to BellSouth calls originating from BellSouth rate centers that are "intraLATA toll" to the rate center where CLEC-1's RAS is located.									
Interoffice Transport - Dedicated Per DS1									
Per Mile per month	TBD	$0.69200	$0.45230	$0.45000	$0.78310	$0.65980	$0.57590	$0.75980	$0.35250
Facility Termination per Month	TBD	$79.69	$78.47	$55.05	$93.40	$74.40	$71.32	$94.98	$75.83
Non-recurring initial DS1	TBD	$223.59	$147.07	$298.18	$160.49	$222.81	$218.28	$216.27	$166.53
Non-recurring per additional DS1	TBD	$168.60	$111.75	$231.23	$123.03	$168.92	$164.55	$162.70	$124.84
NRC - Incremental Charge - Manual Service Order - 1st	TBD	$40.34	$18.94	NA	$26.20	$36.83	$38.12	$39.63	$30.15
NRC - Incremental Charge - Manual Service Order - Add'l	TBD	$40.34	$18.94	NA	$26.20	$36.86	$38.12	$39.63	$31.63
Interoffice Transport - Dedicated Per DS3									
Per Mile per month	TBD	$12.56	$6.53	$12.62	$14.04	$15.02	$13.00	$19.08	$5.89
Facility Termination per Month	TBD	$771.60	$725.53	$1,204.00	$1,101.00	$744.38	$720.65	$960.82	$760.20
Non-recurring initial DS3	TBD	$961.93	$778.80	$946.23	$713.57	$812.30	$798.95	$941.07	$729.27
Non-recurring per additional DS3	TBD	$532.45	$439.62	$516.89	$404.36	$596.55	$582.33	$503.72	$411.98

BELLSOUTH/ACCESS INTEGRATED RATES
LOCAL INTERCONNECTION

DESCRIPTION	USOC	RATES BY STATE							
		AL	FL	GA	KY	LA	MS	NC	SC
NRC - Incremental Charge - Manual Service Order - 1st	TBD	$100.19	$77.41	$93.12	$71.19	$64.97	$91.37	$92.52	$75.98
NRC - Incremental Charge - Manual Service Order - Add'l	TBD	$100.19	$77.41	$93.12	$71.19	$64.97	$91.37	$92.52	$75.98
Common Transport:									
Per Mile per MOU	TBD	$0.0000100	$0.0000080	$0.0000049	$0.0000083	$0.0000091	$0.0000400	$0.0000121	$0.0000400
Facility Termination - Per MOU	TBD	$0.0004500	$0.0004152	$0.0004260	$0.0004700	$0.0004281	$0.0003600	$0.0004672	$0.0003600
Tandem Switching:									
Per MOU	TBD	$0.0006300	$0.0006757	$0.0010960	$0.0043000	$0.0007834	$0.0015000	$0.0006843	$0.0006760
Shared trunk port per port per MOU (EO side)	TBD	$0.0003300	$0.0002126	$0.0003796	$0.0003000	$0.0002834	$0.0003693	$0.0004034	$0.0003904
Total:	TBD	$0.0009600	$0.0008883	$0.0014756	$0.0046000	$0.0010668	$0.0018693	$0.0010877	$0.0010664
NOTES:									
If no rate is identified in the contract, the rate for the specific service or function will be as set forth in applicable BellSouth tariff or as negotiated by the parties upon request by either party.									

BELLSOUTH/ACCESS INTEGRATED RATES
LOCAL INTERCONNECTION

TN
$0.0019
NA
$0.000676
NA
NA
NA
NA
NA
BST State Access Tariff Rates
$0.00004
$0.00036
$0.0173
$18.33
$83.35
$20.88
$30.15
$31.63
NA
NA
NA
NA
NA
NA
$0.17
$17.74
$83.35
$20.88
$30.15
$31.63

BELLSOUTH/ACCESS INTEGRATED RATES
LOCAL INTERCONNECTION

TN
NA
NA
NA
NA
NA
NA
$0.3525
$75.83
$166.53
$124.84
$30.15
$31.63
NA
NA
NA
NA
NA
NA
$5.89
$760.20
$729.27
$411.98
$75.98
$75.98
NA
NA
NA
NA
NA
$19.02
$254.14
$28.96
$33.65
$23.84
$20.14
$257.05
$30.34

BELLSOUTH/ACCESS INTEGRATED RATES
LOCAL INTERCONNECTION

TN
$33.65
$23.84
$40.27
$343.71
$277.86
$23.51
$21.75
$633.15
$829.52
$512.23
$75.98
$53.03
$225.59
$265.08
$185.94
$61.09
$50.31
$21.71
$10.46
$14.21
$1.46
$3.91
$12.61
$9.03
$165.21
$197.21
$119.99
$25.66
$15.81
$21.71
$10.46
$14.21
$1.46
$2.46
$12.61
$9.03
$1.25
$12.61
$9.03

BELLSOUTH/ACCESS INTEGRATED RATES
LOCAL INTERCONNECTION

TN
$20.14
$138.68
$116.63
$16.59
$11.15
$45.68
$1.76
$21.75

BELLSOUTH/ACCESS INTEGRATED RATES
LOCAL INTERCONNECTION

TN

Attachment 4

Physical Collocation

BELLSOUTH
PHYSICAL COLLOCATION

1. Scope of Attachment

1.1 Scope of Attachment. The rates, terms, and conditions contained within this Attachment shall only apply when ACCESS Integrated is occupying the Collocation Space as a sole occupant or as a Host within a Premises location pursuant to Section 4.

All the negotiated rates, terms and conditions set forth in this Attachment pertain to collocation and the provisioning of Collocation Space.

1.2 Right to occupy. BellSouth shall offer to ACCESS Integrated collocation on rates, terms, and conditions that are just, reasonable, non-discriminatory and consistent with the rules of the Federal Communications Commission ("FCC"). Subject to Section 4 of this Attachment, BellSouth hereby grants to ACCESS Integrated a right to occupy that certain area designated by BellSouth within a BellSouth Premises, of a size which is specified by ACCESS Integrated and agreed to by BellSouth (hereinafter "Collocation Space"). BellSouth Premises include BellSouth Central Offices and Serving Wire Centers, as well as all buildings or similar structures owned or leased by BellSouth that house BellSouth Network Facilities and all structures that house facilities on public rights-of-way, including but not limited to, vaults containing loop concentrators and other similar structures. To the extent this Attachment does not include all the necessary rates, terms and conditions for BellSouth Premises other than BellSouth Central Offices, the Parties will negotiate said rates, terms, and conditions at the request for collocation at BellSouth Premises other than a Central Office. Notwithstanding the foregoing, BellSouth shall consider in its designation for cageless collocation any unused space within the BellSouth Premises. The size specified by ACCESS Integrated may contemplate a request for space sufficient to accommodate ACCESS Integrated's growth within a two year period.

1.2.1 Space Reclamation. In the event of space exhaust within a Central Office Premises, BellSouth may include in its documentation for the Petition for Waiver filing any unused space in the Central Office Premises. ACCESS Integrated will be responsible for any justification of unused space within its space, if such justification is required by the appropriate state commission.

1.3 Use of Space. ACCESS Integrated shall use the Collocation Space for the purposes of installing, maintaining and operating ACCESS Integrated's equipment (to include testing and monitoring equipment) used or useful to interconnect with BellSouth services and facilities, including access to unbundled network elements, for the provision of telecommunications services. Pursuant to Section 5 following, ACCESS Integrated may at its option, place ACCESS Integrated-owned fiber entrance facilities to the Collocation Space. In addition to, and not in lieu of, interconnection to BellSouth services and facilities, ACCESS Integrated may connect to other

interconnectors within the designated BellSouth Premises (including to its other virtual or physical collocated arrangements) through co-carrier cross connect facilities designated by ACCESS Integrated pursuant to section 5.6 following. The Collocation Space may be used for no other purposes except as specifically described herein or authorized in writing by BellSouth.

1.4 Rates and charges. ACCESS Integrated agrees to pay the rates and charges identified in Exhibit A attached hereto.

2. Space Notification

2.1 Availability of Space. Upon submission of an application pursuant to Section 6, BellSouth will permit ACCESS Integrated to physically collocate, pursuant to the terms of this Attachment, at any BellSouth Premises, unless BellSouth has determined that there is no space available due to space limitations or that physical collocation is not practical for technical reasons. BellSouth will respond to an application within ten (10) business days as to whether space is available or not available within a BellSouth Premises. If the amount of space requested is not available, BellSouth will notify ACCESS Integrated of the amount of space that is available.

2.2 Reporting. Upon request from ACCESS Integrated, BellSouth will provide a written report ("Space Availability Report") specifying the amount of Collocation Space available at the Premises requested, the number of collocators present at the Premises, any modifications in the use of the space since the last report on the Premises requested and the measures BellSouth is taking to make additional space available for collocation arrangements.

2.2.1 The request from ACCESS Integrated for a Space Availability Report must be written and must include the Premises and Common Language Location Identification ("CLLI") code of the Premises. Such information regarding Premises and CLLI code is located in the National Exchange Carriers Association (NECA) Tariff FCC No. 4.

2.2.2 BellSouth will respond to a request for a Space Availability Report for a particular Premises within ten (10) business days of receipt of such request. BellSouth will make best efforts to respond in ten (10) business days to such a request when the request includes from two (2) to five (5) Premises within the same state. The response time for requests of more than five (5) Premises shall be negotiated between the Parties. If BellSouth cannot meet the ten business day response time, BellSouth shall notify ACCESS Integrated and inform ACCESS Integrated of the time frame under which it can respond.

2.3 Denial of Application. After notifying ACCESS Integrated that BellSouth has no available space in the requested Premises ("Denial of Application"), BellSouth will allow ACCESS Integrated, upon request, to tour the entire Premises within ten (10) business days of such Denial of Application. In order to schedule said tour within ten

(10) business days, the request for a tour of the Premises must be received by BellSouth within five (5) business days of the Denial of Application.

2.4 Filing of Petition for Waiver. Upon Denial of Application BellSouth will timely file a petition with the Commission pursuant to 47 U.S.C. § 251(c)(6).

2.5 Waiting List. On a first-come, first-served basis governed by the date of receipt of an application or Letter of Intent, BellSouth will maintain a waiting list of requesting carriers who have either received a Denial of Application or, where it is publicly known that the Premises is out of space, have submitted a Letter of Intent to collocate. BellSouth will notify the telecommunications carriers on the waiting list when space becomes available according to how much space becomes available and the position of telecommunications carrier on said waiting list. ACCESS Integrated must submit an updated, complete, and correct application to BellSouth within 30 business days or notify BellSouth in writing that ACCESS Integrated wants to maintain its place on the waiting list either without accepting such space or accepting an amount of space less than its original request. If ACCESS Integrated does not submit such an application or notify BellSouth in writing as described above, BellSouth will offer such space to the next CLEC on the waiting list and remove ACCESS Integrated from the waiting list. Upon request, BellSouth will advise ACCESS Integrated as to its position on the list.

2.6 Public Notification. BellSouth will maintain on its Interconnection Services website a notification document that will indicate all Central Offices that are without available space. BellSouth shall update such document within ten (10) business days of the Denial of Application date. BellSouth will also post a document on its Interconnection Services website that contains a general notice where space has become available in a Central Office previously on the space exhaust list. BellSouth shall allocate said available space pursuant to the waiting list referenced in Section 2.5.

2.7 State Agency Procedures. Notwithstanding the foregoing, should any state regulatory agency impose procedures or intervals different than procedures or intervals set forth in this section, whether now in effect or that become effective after execution of this Agreement, those procedures or intervals shall supersede the requirements set forth herein for all applications submitted for the first time after the effective date thereof.

3. Collocation Options

3.1 Cageless. In accordance and compliance with local building code, BellSouth shall allow ACCESS Integrated to collocate ACCESS Integrated's equipment and facilities without requiring the construction of a cage or similar structure and without requiring the creation of a separate entrance to the Collocation Space. BellSouth shall allow ACCESS Integrated to have direct access to its equipment and facilities but may require ACCESS Integrated to use a central entrance to the BellSouth Premises.

BellSouth shall make cageless collocation available in single bay increments pursuant to Section 7. Except where ACCESS Integrated's equipment requires special technical considerations (e.g., special cable racking, isolated ground plane), BellSouth shall assign cageless Collocation Space in conventional equipment rack lineups where feasible. For equipment requiring special technical considerations, ACCESS Integrated must provide the equipment layout, including spatial dimensions for such equipment pursuant to generic requirements contained in BellCore (Telcordia) GR-63-Core and shall be responsible for constructing all special technical requirements associated with such equipment pursuant to Section 6.5 following.

3.2 Cages and Adjacent Arrangement Enclosures. At ACCESS Integrated's option and upon request, BellSouth shall construct enclosures in compliance with ACCESS Integrated's collocation request and in accordance and compliance with local building code. At ACCESS Integrated's request, BellSouth shall permit ACCESS Integrated to subcontract the construction of physical collocation arrangements with a contractor certified by BellSouth ("BellSouth Certified Contractor"), provided however, that BellSouth shall not unreasonably withhold approval of contractors.

3.3 When ACCESS Integrated subcontracts the construction, ACCESS Integrated must arrange with a BellSouth Certified Contractor to construct a collocation arrangement enclosure in accordance with BellSouth's guidelines and specifications and at ACCESS Integrated's sole expense. BellSouth will provide guidelines and specifications upon request. Where local building codes require enclosure specifications more stringent than BellSouth's standard enclosure specification, ACCESS Integrated and ACCESS Integrated's BellSouth Certified Contractor must comply with local building code requirements. ACCESS Integrated's BellSouth Certified Contractor shall be responsible for filing and receiving any and all necessary permits and/or licenses for such construction. BellSouth shall cooperate with ACCESS Integrated and provide, at ACCESS Integrated's expense, the documentation, including architectural drawings, necessary for ACCESS Integrated to obtain the zoning, permits and/or other licenses. BellSouth shall pass on to ACCESS Integrated the costs of providing the documentation. The BellSouth Certified Contractor shall bill ACCESS Integrated directly for all work performed for ACCESS Integrated pursuant to this Attachment and BellSouth shall have no liability for nor responsibility to pay such charges imposed by the BellSouth Certified Contractor. ACCESS Integrated must provide the local BellSouth building contact with two Access Keys used to enter the locked enclosure. Except in case of emergency, BellSouth will not access ACCESS Integrated's locked enclosure prior to notifying ACCESS Integrated.

3.3.1 BellSouth has the right to review ACCESS Integrated's plans and specifications prior to allowing construction to start. BellSouth has the right to inspect the enclosure after construction to make sure it is designed and constructed according to BellSouth's guidelines and specifications and to require ACCESS Integrated to remove or correct at ACCESS Integrated's cost any structure that does not meet these standards.

3.4 Shared (Subleased) Caged Collocation. ACCESS Integrated may allow other telecommunications carriers to share ACCESS Integrated's caged collocation arrangement pursuant to terms and conditions agreed to by ACCESS Integrated ("Host") and other telecommunications carriers ("Guests") and pursuant to this section in accordance and compliance with local building code, except where the BellSouth Premises is located within a leased space and BellSouth is prohibited by said lease from offering such an option. ACCESS Integrated shall notify BellSouth in writing upon execution of any agreement between the Host and its Guest within ten (10) business days of its execution and prior to any Firm Order. Further, such notice shall include the name of the Guest(s) and the term of the agreement, and shall contain a certification by ACCESS Integrated that said agreement imposes upon the Guest(s) the same terms and conditions for Collocation Space as set forth in this Attachment between BellSouth and ACCESS Integrated.

3.4.1 ACCESS Integrated shall be the sole interface and responsible Party to BellSouth for the purpose of submitting applications for initial and additional equipment placements of Guest; for assessment of rates and charges contained within this Attachment; and for the purposes of ensuring that the safety and security requirements of this Attachment are fully complied with by the Guest, its employees and agents. In the event the Host and Guest jointly submit an initial Application, only one Application Fee will be assessed. A separate initial Guest application shall require the assessment of a Subsequent Application Fee, as set forth in Exhibit A, if this application is not the initial application made for the arrangement. Notwithstanding the foregoing, Guest may arrange directly with BellSouth for the provision of the interconnecting facilities between BellSouth and Guest and for the provision of the services and access to unbundled network elements.

3.4.2 ACCESS Integrated shall indemnify and hold harmless BellSouth from any and all claims, actions, causes of action, of whatever kind or nature arising out of the presence of ACCESS Integrated's Guests in the Collocation Space except to the extent caused by BellSouth's sole negligence, gross negligence, or willful misconduct.

3.5 Adjacent Collocation. BellSouth will provide adjacent collocation arrangements ("Adjacent Arrangement") where space within the Premises is legitimately exhausted, subject to technical feasibility, where the Adjacent Arrangement does not interfere with access to existing or planned structures or facilities on the Premises property and where permitted by zoning and other applicable state and local regulations. The Adjacent Arrangement shall be constructed or procured by ACCESS Integrated and in conformance with BellSouth's design and construction specifications. Further, ACCESS Integrated shall construct, procure, maintain and operate said Adjacent Arrangement(s) pursuant to all of the terms and conditions set forth in this Attachment. Rates shall be negotiated at the time of the request for the Adjacent Arrangement.

3.4.1 Should ACCESS Integrated elect such option, ACCESS Integrated must arrange with a BellSouth Certified Contractor to construct an Adjacent Arrangement structure in accordance with BellSouth's guidelines and specifications. BellSouth will provide guidelines and specifications upon request. Where local building codes require enclosure specifications more stringent than BellSouth's standard specification, ACCESS Integrated and ACCESS Integrated's BellSouth Certified Contractor must comply with local building code requirements. ACCESS Integrated's BellSouth Certified Contractor shall be responsible for filing and receiving any and all necessary zoning, permits and/or licenses for such construction. ACCESS Integrated's BellSouth Certified Contractor shall bill ACCESS Integrated directly for all work performed for ACCESS Integrated pursuant to this Attachment and BellSouth shall have no liability for nor responsibility to pay such charges imposed by the BellSouth Certified Contractor. ACCESS Integrated must provide the local BellSouth building contact with two cards, keys or other access device used to enter the locked enclosure. Except in cases of emergency, BellSouth shall not access ACCESS Integrated's locked enclosure prior to notifying ACCESS Integrated.

3.4.2 BellSouth maintains the right to review ACCESS Integrated's plans and specifications prior to construction of an Adjacent Arrangement(s). BellSouth may inspect the Adjacent Arrangement(s) following construction and prior to the Commencement Date, as defined in Section 4.1 following, to ensure the design and construction comply with BellSouth's guidelines and specifications. BellSouth may require ACCESS Integrated, at ACCESS Integrated's sole cost, to correct any deviations from BellSouth's guidelines and specifications found during such inspection(s), up to and including removal of the Adjacent Arrangement, within five (5) business days of BellSouth's inspection, unless the Parties mutually agree to an alternative time frame.

3.4.3 ACCESS Integrated shall provide a concrete pad, the structure housing the arrangement, heating/ventilation/air conditioning ("HVAC"), lighting, and all facilities that connect the structure (i.e. racking, conduits, etc.) to the BellSouth point of interconnection. At ACCESS Integrated's option, and where the local authority having jurisdiction permits, BellSouth shall provide an AC power source and access to physical collocation services and facilities subject to the same nondiscriminatory requirements as applicable to any other physical collocation arrangement. ACCESS Integrated's BellSouth Certified Contractor shall be responsible for filing and receiving any and all necessary zoning, permits and/or licenses for such arrangement.

3.5.1 BellSouth shall allow Shared (Subleased) Caged Collocation within an Adjacent Arrangement pursuant to the terms and conditions set forth in Section 3.3 preceding.

4. Occupancy

4.1 Commencement Date. The "Commencement Date" shall be the day ACCESS Integrated's equipment becomes operational as described in Article 4.2, following.

4.2 Occupancy. BellSouth will notify ACCESS Integrated in writing that the Collocation Space is ready for occupancy. ACCESS Integrated must notify BellSouth in writing that collocation equipment installation is complete and is operational with BellSouth's network. BellSouth may, at its option, not accept orders for interconnected service until receipt of such notice. For purposes of this paragraph, ACCESS Integrated's telecommunications equipment will be deemed operational when cross-connected to BellSouth's network for the purpose of service provision.

4.3 Termination. Except where otherwise agreed to by the Parties, ACCESS Integrated may terminate occupancy in a particular Collocation Space upon thirty (30) business days prior written notice to BellSouth. Upon termination of such occupancy, ACCESS Integrated at its expense shall remove its equipment and other property from the Collocation Space. ACCESS Integrated shall have thirty (30) business days from the termination date to complete such removal, including the removal of all equipment and facilities of ACCESS Integrated's Guests; provided, however, that ACCESS Integrated shall continue payment of monthly fees to BellSouth until such date as ACCESS Integrated has fully vacated the Collocation Space. Should ACCESS Integrated or ACCESS Integrated's Guest fail to vacate the Collocation Space within thirty (30) business days from the termination date, BellSouth shall have the right to remove the equipment and other property of ACCESS Integrated or ACCESS Integrated's Guest at ACCESS Integrated's expense and with no liability for damage or injury to ACCESS Integrated or ACCESS Integrated's Guest's property unless caused by the gross negligence or intentional misconduct of BellSouth. Upon expiration of this Attachment with respect to a Collocation Space, ACCESS Integrated shall surrender such Collocation Space to BellSouth in the same condition as when first occupied by the ACCESS Integrated except for ordinary wear and tear unless otherwise agreed to by the Parties. ACCESS Integrated shall be responsible for the cost of removing any enclosure, together with all support structures (e.g., racking, conduits), of an Adjacent Collocation arrangement at the termination of occupancy and restoring the grounds to their original condition.

5. Use of Collocation Space

5.1 Equipment Type. BellSouth permits the collocation of any type of equipment used or useful for interconnection to BellSouth's network or for access to unbundled network elements in the provision of telecommunications services. Such equipment used or useful for interconnection and access to unbundled network elements includes, but is not limited to transmission equipment including, but not limited to, optical terminating equipment and multiplexers, and digital subscriber line access multiplexers, routers, asynchronous transfer mode multiplexers, and remote switching modules. Nothing in this section requires BellSouth to permit collocation of equipment used solely to provide enhanced services; provided, however, that BellSouth may not place any limitations on the ability of requesting carriers to use all

the features, functions, and capabilities of equipment collocated pursuant to this section.

5.1.1 Such equipment must at a minimum meet the following BellCore (Telcordia) Network Equipment Building Systems (NEBS) General Equipment Requirements: Criteria Level 1 requirements as outlined in the BellCore (Telcordia) Special Report SR-3580, Issue 1; equipment design spatial requirements per GR-63-CORE, Section 2; thermal heat dissipation per GR-063-CORE, Section 4, Criteria 77-79; acoustic noise per GR-063-CORE, Section 4, Criterion 128, and National Electric Code standards.

5.1.2 ACCESS Integrated shall not use the Collocation Space for marketing purposes nor shall it place any identifying signs or markings in the area surrounding the Collocation Space or on the grounds of the Premises.

5.1.3 ACCESS Integrated shall place a plaque or other identification affixed to ACCESS Integrated's equipment necessary to identify ACCESS Integrated's equipment, including a list of emergency contacts with telephone numbers.

5.2 Entrance Facilities. ACCESS Integrated may elect to place ACCESS Integrated-owned or ACCESS Integrated-leased fiber entrance facilities into the Collocation Space. BellSouth will designate the point of entrance in close proximity to the Premises building housing the Collocation Space, such as an entrance manhole or a cable vault which are physically accessible by both Parties. ACCESS Integrated will provide and place fiber cable at the point of entrance of sufficient length to be pulled through conduit and into the splice location. ACCESS Integrated will provide and install a sufficient length of fire retardant riser cable, to which the entrance cable will be spliced, which will extend from the splice location to ACCESS Integrated's equipment in the Collocation Space. In the event ACCESS Integrated utilizes a non-metallic, riser-type entrance facility, a splice will not be required. ACCESS Integrated must contact BellSouth for instructions prior to placing the entrance facility cable in the manhole. ACCESS Integrated is responsible for maintenance of the entrance facilities. At ACCESS Integrated's option BellSouth will accommodate where technically feasible a microwave entrance facility pursuant to separately negotiated terms and conditions.

5.2.1 Dual Entrance. BellSouth will provide at least two interconnection points at each Premises where there are at least two such interconnection points available and where capacity exists. Upon receipt of a request for physical collocation under this Attachment, BellSouth shall provide ACCESS Integrated with information regarding BellSouth's capacity to accommodate dual entrance facilities. If conduit in the serving manhole(s) is available and is not reserved for another purpose for utilization within 12 months of the receipt of an application for collocation, BellSouth will make the requested conduit space available for installing a second entrance facility to ACCESS Integrated's arrangement. The location of the serving manhole(s) will be

determined at the sole discretion of BellSouth. Where dual entrance is not available due to lack of capacity, BellSouth will so state in the Application Response.

5.2.2 Shared Use. ACCESS Integrated may utilize spare capacity on an existing interconnector entrance facility for the purpose of providing an entrance facility to another ACCESS Integrated collocation arrangement within the same BellSouth Premises. ACCESS Integrated must arrange with BellSouth for BellSouth to splice the utilized entrance facility capacity to ACCESS Integrated-provided riser cable.

5.3 Splicing in the Entrance Manhole. Although not generally permitted, should ACCESS Integrated request a splice to occur in the entrance manhole(s), BellSouth, at its sole discretion, may grant such a request. When the request for a splice is granted to ACCESS Integrated by BellSouth, ACCESS Integrated shall ensure its employees or agents entering and/or performing work in the entrance manhole(s) are trained and comply with BellSouth procedures and OSHA requirements regarding access to manholes and that BellSouth personnel are notified and present for all entrances and work performed in the entrance manhole(s). Manhole covers shall be properly closed and secured at the conclusion of entry and/or work. Advance notification to BellSouth shall occur at a minimum of 48 hours prior to desired entry for normal work activities and at a minimum of 2 hours prior to desired entry in an out of service condition.

5.4 Demarcation Point. BellSouth will designate the point(s) of interconnection between ACCESS Integrated's equipment and/or network and BellSouth's network. Each Party will be responsible for maintenance and operation of all equipment/facilities on its side of the demarcation point. For 2-wire and 4-wire connections to BellSouth's network, the demarcation point shall be a common block on the BellSouth designated conventional distributing frame. ACCESS Integrated shall be responsible for providing, and a supplier certified by BellSouth ("ACCESS Integrated's BellSouth Certified Supplier") shall be responsible for installing and properly labeling/stenciling, the common block, and necessary cabling pursuant to Section 6.4. For all other terminations BellSouth shall designate a demarcation point on a per arrangement basis. ACCESS Integrated or its agent must perform all required maintenance to equipment/facilities on its side of the demarcation point, pursuant to Section 5.5, following, and may self-provision cross-connects that may be required within the Collocation Space to activate service requests. At ACCESS Integrated's option and expense, a Point of Termination ("POT") bay or frame may be placed in the Collocation Space, but will not serve as the demarcation point. ACCESS Integrated must make arrangements with a BellSouth Certified Supplier for such placement.

5.5 ACCESS Integrated's Equipment and Facilities. ACCESS Integrated, or if required by this Attachment, ACCESS Integrated's BellSouth Certified Supplier, is solely responsible for the design, engineering, installation, testing, provisioning, performance, monitoring, maintenance and repair of the equipment and facilities used

by ACCESS Integrated. Such equipment and facilities may include but are not limited to cable(s); equipment; and point of termination connections.

5.6 Co-carrier cross-connect. In addition to, and not in lieu of, obtaining interconnection with, or access to, BellSouth's telecommunications services, unbundled network elements, and facilities, ACCESS Integrated may directly connect to other interconnectors within the designated BellSouth Premises (including to its other virtual or physical collocated arrangements) through facilities owned by ACCESS Integrated or through BellSouth facilities designated by ACCESS Integrated, at ACCESS Integrated's option. Such connections to other carriers may be made using either optical or electrical facilities. ACCESS Integrated may deploy such optical or electrical connections directly between its own facilities and the facilities of other interconnector(s) without being routed through BellSouth equipment.

5.6.1 If ACCESS Integrated requests a co-carrier cross-connect after the initial installation, ACCESS Integrated must submit an application with a Subsequent Application Fee. ACCESS Integrated must use a BellSouth Certified Supplier to place the co-carrier cross connect, except in cases where the ACCESS Integrated equipment and the equipment of the other interconnector are located within contiguous Collocation Spaces. In cases where ACCESS Integrated's equipment and the equipment of the other interconnector are located in contiguous Collocation Spaces, ACCESS Integrated will have the option to deploy the co-carrier cross connects between the sets of equipment. Where cable support structure exists for such connection, there will be a recurring charge per linear foot of support structure used. When cable support structures do not exist and must be constructed, a pro-rated non-recurring charge for the individual case will be assessed to all that benefit from that construction.

5.7 BellSouth's Access to Collocation Space. From time to time BellSouth may require access to the Collocation Space. BellSouth retains the right to access such space for the purpose of making BellSouth equipment and building modifications (e.g., running, altering or removing racking, ducts, electrical wiring, HVAC, and cables). BellSouth will give reasonable notice to ACCESS Integrated when access to the Collocation Space is required. ACCESS Integrated may elect to be present whenever BellSouth performs work in the Collocation Space. The Parties agree that ACCESS Integrated will not bear any of the expense associated with this work.

5.8 Access. Pursuant to Section 11, ACCESS Integrated shall have access to the Collocation Space twenty-four (24) hours a day, seven (7) days a week. ACCESS Integrated agrees to provide the name and social security number or date of birth or driver's license number of each employee, contractor, or agents of ACCESS Integrated or ACCESS Integrated's Guests provided with access keys or cards ("Access Keys") prior to the issuance of said Access Keys. Access Keys shall not be duplicated under any circumstances. ACCESS Integrated agrees to be responsible for all Access Keys and for the return of all said Access Keys in the possession of

ACCESS Integrated employees, contractors, Guests, or agents after termination of the employment relationship, contractual obligation with ACCESS Integrated or upon the termination of this Attachment or the termination of occupancy of an individual collocation arrangement.

5.8.1 Lost or Stolen Access Keys. ACCESS Integrated shall notify BellSouth in writing immediately in the case of lost or stolen Access Keys. Should it become necessary for BellSouth to re-key buildings or deactivate a card as a result of a lost Access Key(s) or for failure to return an Access Key(s), ACCESS Integrated shall pay for all reasonable costs associated with the re-keying or deactivating the card.

5.9 Interference or Impairment. Notwithstanding any other provisions of this Attachment, equipment and facilities placed in the Collocation Space shall not interfere with or impair service provided by BellSouth or by any other interconnector located in the Premises; shall not endanger or damage the facilities of BellSouth or of any other interconnector, the Collocation Space, or the Premises; shall not compromise the privacy of any communications carried in, from, or through the Premises; and shall not create an unreasonable risk of injury or death to any individual or to the public. If BellSouth reasonably determines that any equipment or facilities of ACCESS Integrated violates the provisions of this paragraph, BellSouth shall give written notice to ACCESS Integrated, which notice shall direct ACCESS Integrated to cure the violation within forty-eight (48) hours of ACCESS Integrated's actual receipt of written notice or, at a minimum, to commence curative measures within 24 hours and to exercise reasonable diligence to complete such measures as soon as possible thereafter. After receipt of the notice, the Parties agree to consult immediately and, if necessary, to inspect the arrangement. If ACCESS Integrated fails to take curative action within 48 hours or if the violation is of a character which poses an immediate and substantial threat of damage to property, injury or death to any person, or interference/impairment of the services provided by BellSouth or any other interconnector, then and only in that event BellSouth may take such action as it deems appropriate to correct the violation, including without limitation the interruption of electrical power to ACCESS Integrated's equipment. BellSouth will endeavor, but is not required, to provide notice to ACCESS Integrated prior to taking such action and shall have no liability to ACCESS Integrated for any damages arising from such action, except to the extent that such action by BellSouth constitutes willful misconduct.

5.10 Personalty and its Removal. Subject to requirements of this Attachment, ACCESS Integrated may place or install in or on the Collocation Space such facilities and equipment, including storage for spare equipment**,** as it deems desirable for the conduct of business, provided that such equipment is telecommunications equipment, does not violate floor loading requirements, nor imposes or could impose or contains or could contain environmental conditions or hazards. Personal property, facilities and equipment placed by ACCESS Integrated in the Collocation Space shall not become a part of the Collocation Space, even if nailed, screwed or otherwise fastened

to the Collocation Space, but shall retain their status as personalty and may be removed by ACCESS Integrated at any time. Any damage caused to the Collocation Space by ACCESS Integrated's employees, agents or representatives during the removal of such property shall be promptly repaired by ACCESS Integrated at its expense.

5.11 Alterations. In no case shall ACCESS Integrated or any person acting on behalf of ACCESS Integrated make any rearrangement, modification, improvement, addition, repair, or other alteration which could affect in any way space, power, HVAC, and/or safety considerations to the Collocation Space or the BellSouth Premises without the written consent of BellSouth, which consent shall not be unreasonably withheld. The cost of any such specialized alterations shall be paid by ACCESS Integrated. Any material rearrangement, modification, improvement, addition, repair, or other alteration shall require a Subsequent Application and Subsequent Application Fee, pursuant to sub-section 6.2.2

5.12 Janitorial Service. ACCESS Integrated shall be responsible for the general upkeep and cleaning of the Caged Collocation Space and shall arrange directly with a BellSouth Certified Contractor for janitorial services. BellSouth shall provide a list of such contractors on a site-specific basis upon request.

6. Ordering and Preparation of Collocation Space

6.1 Should any state regulatory agency impose procedures or intervals different than procedures or intervals set forth in this section, whether now in effect or that become effective after execution of this Agreement, those procedures or intervals shall supersede the requirements set forth herein for all applications submitted for the first time after the effective date thereof.

6.2 Application for Space. ACCESS Integrated shall submit an application document when ACCESS Integrated or ACCESS Integrated's Guest(s), as defined in Section 3.3, desires to request or modify the use of the Collocation Space.

6.2.1 Initial Application. For ACCESS Integrated or ACCESS Integrated's Guest(s) initial equipment placement, ACCESS Integrated shall submit to BellSouth a Physical Expanded Interconnection Application Document ("Application"), together with payment of the Application Fee as stated in Exhibit A. The Application is Bona Fide when it is complete and accurate, meaning that all required fields on the application are completed with the appropriate type of information. The Bona Fide Application shall contain a detailed description and schematic drawing of the equipment to be placed in ACCESS Integrated's Collocation Space(s) and an estimate of the amount of square footage required.

6.2.2 Subsequent Application Fee. In the event ACCESS Integrated or ACCESS Integrated's Guest(s) desire to modify the use of the Collocation Space, ACCESS

Integrated shall complete an Application document detailing all information regarding the modification to the Collocation Space together with payment of the minimum Subsequent Application Fee as stated in Exhibit A. Said minimum Subsequent Application Fee shall be considered a partial payment of the applicable Subsequent Application Fee which shall be calculated as set forth below. BellSouth shall determine what modifications, if any, to the Premises are required to accommodate the change requested by ACCESS Integrated in the Application. Such necessary modifications to the Premises may include but are not limited to, floor loading changes, changes necessary to meet HVAC requirements, changes to power plant requirements, and equipment additions. The fee paid by ACCESS Integrated for its request to modify the use of the Collocation Space shall be dependent upon the level of assessment needed for the modification requested. Where the subsequent Application does not require assessment for provisioning or construction work by BellSouth, no Subsequent Application Fee will be required and the pre-paid fee shall be refunded to ACCESS Integrated. The fee for an Application where the modification requested has limited effect (e.g., does not require assessment related to capital expenditure by BellSouth) shall be the Subsequent Application Fee as set forth in Exhibit A. If the modification requires capital expenditure assessment, a fee ranging from the minimum Subsequent Application Fee up to the full Application Fee for the appropriate state shall apply. In the event such modifications require the assessment of a full Application Fee as set forth in Exhibit A, the outstanding balance shall be due by ACCESS Integrated within 30 calendar days following ACCESS Integrated's receipt of a bill or invoice from BellSouth.

6.3 Application Response. In addition to the notice of space availability pursuant to Section 2.1, BellSouth will respond within ten (10) business days of receipt of an Application stating whether the Application is Bona Fide, and if it is not Bona Fide, the items necessary to cause the Application to become Bona Fide. When space has been determined to be available, BellSouth will provide a comprehensive written response ("Application Response") within thirty (30) business days of receipt of a Bona Fide Application. The Application Response will include the configuration of the space, the Cable Installation Fee, and the estimated Space Preparation Fee, as described in Section 7. When multiple applications are submitted within a fifteen (15) business day window, BellSouth will respond to the Bona Fide Applications as soon as possible, but no later than the following: within thirty (30) business days for Bona Fide Applications 1-5; within thirty-six (36) business days for Bona Fide Applications 6-10; within forty-two (42) business days for Bona Fide Applications 11-15. Response intervals for multiple Bona Fide Applications submitted within the same timeframe for the same state in excess of 15 must be negotiated. All negotiations shall consider the total volume from all requests from telecommunications companies for collocation.

6.4 Application Modifications. If a modification or revision is made to any information in Sections 2 through 12 or 15 of a Bona Fide Application for Physical Collocation, or Sections 2 through 10 or 13 of a Bona Fide Application for Adjacent Collocation,

either at the request of ACCESS Integrated or necessitated by technical considerations, BellSouth will respond to the Bona Fide Application within thirty (30) business days after BellSouth receives such application or at such other date as the Parties agree. If, at any time, BellSouth needs to reevaluate ACCESS Integrated's Bona Fide Application as a result of changes requested by ACCESS Integrated to ACCESS Integrated's original application, then BellSouth will charge ACCESS Integrated a fee based upon the additional engineering hours required to do the reassessment. Major changes such as requesting additional space or adding additional equipment may require ACCESS Integrated to resubmit the application with an Application Fee. ACCESS Integrated may modify or revise Section 1, 13, 14, or 16 of a Bona Fide Application for Physical Collocation, or Sections 1, 11, or 12 of a Bona Fide Application for Adjacent Collocation, without incurring additional expense or a longer Application Response interval.

6.5 Bona Fide Firm Order. ACCESS Integrated shall indicate its intent to proceed with equipment installation in a BellSouth Premises by submitting a Bona Fide Firm Order to BellSouth. A Bona Fide Firm Order requires ACCESS Integrated to complete the Application/Inquiry process described in Section 6.2, preceding, and submit the Physical Expanded Interconnection Firm Order document (BSTEI-1P-F) indicating acceptance of the Application Response provided by BellSouth ("Bona Fide Firm Order") and all appropriate fees, as set forth in Section 7. The Bona Fide Firm Order must be received by BellSouth no later than thirty (30) business days after BellSouth's Application Response to ACCESS Integrated's Bona Fide Application.

6.5.1 BellSouth will establish a firm order date based upon the date BellSouth is in receipt of a Bona Fide Firm Order. BellSouth will acknowledge the receipt of ACCESS Integrated's Bona Fide Firm Order within seven (7) calendar days of receipt indicating that the Bona Fide Firm Order has been received. A BellSouth response to a Bona Fide Firm Order will include a Firm Order Confirmation containing the firm order date. No revisions will be made to a Bona Fide Firm Order.

6.5.2 BellSouth will permit one accompanied site visit to ACCESS Integrated's designated collocation arrangement location after receipt of the Bona Fide Firm Order without charge to ACCESS Integrated.

6.5.3 Space preparation for the Collocation Space will not begin until BellSouth receives the Bona Fide Firm Order and all applicable fees.

6.5.4 ACCESS Integrated must submit to BellSouth the completed Access Control Request Form (RF-2906-C) for all employees or agents requiring access to the BellSouth Premises a minimum of 30 calendar days prior to the date ACCESS Integrated desires access to the Collocation Space.

6.6 Construction and Provisioning Interval. BellSouth will negotiate construction and provisioning intervals on an individual case basis. Excluding the time interval required to secure the appropriate government licenses and permits, BellSouth will

use best efforts to complete construction for collocation arrangements under ordinary conditions as soon as possible and within a maximum of 120 calendar days from receipt of a Bona Fide Firm Order. Ordinary conditions are defined as space available with only minor changes to support systems required, such as but not limited to, HVAC, cabling and the power plant(s). Excluding the time interval required to secure the appropriate government licenses and permits, BellSouth will use best efforts to complete construction of all other Collocation Space ("extraordinary conditions") within 180 calendar days of the receipt of a Bona Fide Firm Order. Extraordinary conditions are defined to include but are not limited to major BellSouth equipment rearrangement or addition; power plant addition or upgrade; major mechanical addition or upgrade; major upgrade for ADA compliance; environmental hazard or hazardous materials abatement; and arrangements for which equipment shipping intervals are extraordinary in length.

6.6.1 Joint Planning Meeting. Unless otherwise agreed to by the Parties, a joint planning meeting or other method of joint planning between BellSouth and ACCESS Integrated will commence within a maximum of twenty (20) calendar days from BellSouth's receipt of a Bona Fide Firm Order and the payment of agreed upon fees. At such meeting, the Parties will agree to the preliminary design of the Collocation Space and the equipment configuration requirements as reflected in the Bona Fide Application and affirmed in the Bona Fide Firm Order. The Collocation Space completion time period will be provided to ACCESS Integrated during the joint planning meeting or as soon as possible thereafter. BellSouth will complete all design work following the joint planning meeting.

6.6.2 Permits. Each Party or its agents will diligently pursue filing for the permits required for the scope of work to be performed by that Party or its agents within ten (10) calendar days of the completion of finalized construction designs and specifications.

6.6.3 Acceptance Walk Through. ACCESS Integrated and BellSouth will complete an acceptance walk through of each Collocation Space requested from BellSouth by ACCESS Integrated. BellSouth will correct any deviations to ACCESS Integrated's original or jointly amended requirements within seven (7) calendar days after the walk through, unless the Parties jointly agree upon a different time frame.

6.7 Use of BellSouth Certified Supplier. ACCESS Integrated shall select a supplier which has been approved as a BellSouth Certified Supplier to perform all engineering and installation work required in TR 73503 in the Collocation Space. In some cases, ACCESS Integrated must select separate BellSouth Certified Suppliers for transmission equipment, switching equipment and power equipment. BellSouth shall provide ACCESS Integrated with a list of BellSouth Certified Suppliers upon request. The BellSouth Certified Supplier(s) shall be responsible for installing ACCESS Integrated's equipment and components, installing co-carrier cross connects, extending power cabling to the BellSouth power distribution frame, performing operational tests after installation is complete, and notifying BellSouth's equipment

engineers and ACCESS Integrated upon successful completion of installation. The BellSouth Certified Supplier shall bill ACCESS Integrated directly for all work performed for ACCESS Integrated pursuant to this Attachment and BellSouth shall have no liability for nor responsibility to pay such charges imposed by the BellSouth Certified Supplier. BellSouth shall consider certifying ACCESS Integrated or any supplier proposed by ACCESS Integrated.

6.8 Alarm and Monitoring. BellSouth shall place environmental alarms in the Premises for the protection of BellSouth equipment and facilities. ACCESS Integrated shall be responsible for placement, monitoring and removal of environmental and equipment alarms used to service ACCESS Integrated's Collocation Space. Upon request, BellSouth will provide ACCESS Integrated with applicable tariffed service(s) to facilitate remote monitoring of collocated equipment by ACCESS Integrated. Both Parties shall use best efforts to notify the other of any verified environmental hazard known to that Party. The Parties agree to utilize and adhere to the Environmental Hazard Guidelines identified as Exhibit B attached hereto.

6.9 Basic Telephone Service. Upon request of ACCESS Integrated, BellSouth will provide basic telephone service to the Collocation Space under the rates, terms and conditions of the current tariff offering for the service requested.

6.10 Space Preparation. BellSouth shall pro rate the costs of any renovation or upgrade to Premises space or support mechanisms which is required to accommodate physical collocation, unless otherwise specified in Attachment A. ACCESS Integrated's pro rated share will be calculated by multiplying such cost by a percentage equal to the amount of square footage occupied by ACCESS Integrated divided by the total Premises square footage receiving renovation or upgrade. For this section, support mechanisms provided by BellSouth may include, but not be limited to, HVAC equipment, HVAC duct work, cable support structure, fire wall(s), mechanical upgrade, asbestos abatement, or ground plane addition. Such renovation or upgrade will be evaluated and the charges assessed on a per Premises basis. BellSouth will reimburse ACCESS Integrated in an amount equal to ACCESS Integrated's reasonable, demonstrative and mitigated expenditures incurred as a direct result of delays to the completion and turnover dates caused by BellSouth.

6.11 Virtual Collocation Transition. BellSouth offers Virtual Collocation pursuant to the rates, terms and conditions set forth in its F.C.C. Tariff No. 1. For the interconnection to BellSouth's network and access to BellSouth unbundled network elements, ACCESS Integrated may purchase 2-wire and 4-wire cross-connects as set forth in Exhibit A, and ACCESS Integrated may place within its Virtual Collocation arrangements the telecommunications equipment set forth in Section 5.1. In the event physical Collocation Space was previously denied at a location due to technical reasons or space limitations, and that physical Collocation Space has subsequently become available, ACCESS Integrated may transition its virtual collocation arrangements to physical collocation arrangements and pay the appropriate non-

recurring fees for physical collocation and for the rearrangement or reconfiguration of services terminated in the virtual collocation arrangement, as outlined in the appropriate BellSouth tariffs. In the event that BellSouth knows when additional space for physical collocation may become available at the location requested by ACCESS Integrated, such information will be provided to ACCESS Integrated in BellSouth's written denial of physical collocation. To the extent that (i) physical Collocation Space becomes available to ACCESS Integrated within 180 calendar days of BellSouth's written denial of ACCESS Integrated's request for physical collocation, and (ii) ACCESS Integrated was not informed in the written denial that physical Collocation Space would become available within such 180 calendar days, then ACCESS Integrated may transition its virtual collocation arrangement to a physical collocation arrangement and will receive a credit for any nonrecurring charges previously paid for such virtual collocation. ACCESS Integrated must arrange with a BellSouth Certified Supplier for the relocation of equipment from its virtual Collocation Space to its physical Collocation Space and will bear the cost of such relocation.

6.12 Cancellation. If, at anytime, ACCESS Integrated cancels its order for the Collocation Space(s), ACCESS Integrated will reimburse BellSouth for any expenses incurred up to the date that written notice of the cancellation is received. In no event will the level of reimbursement under this paragraph exceed the maximum amount ACCESS Integrated would have otherwise paid for work undertaken by BellSouth if no cancellation of the order had occurred.

6.13 Licenses. ACCESS Integrated, at its own expense, will be solely responsible for obtaining from governmental authorities, and any other appropriate agency, entity, or person, all rights, privileges, and licenses necessary or required to operate as a provider of telecommunications services to the public or to occupy the Collocation Space.

7. Rates and Charges

7.1 Non-recurring Fees. In addition to the Application Fee referenced in Section 6, preceding, ACCESS Integrated shall remit payment of a Cable Installation Fee and one-half (1/2) of the estimated Space Preparation Fee, as applicable, coincident with submission of a Bona Fide Firm Order. The estimated Space Preparation Fee and the Cable Installation Fee shall be included in the Application Response. The outstanding balance of the actual Space Preparation Fee shall be due thirty (30) calendar days following ACCESS Integrated's receipt of a bill or invoice from BellSouth. Once the installation of the initial equipment arrangement is complete, a subsequent application fee may apply (as described in Section 6.2.2) if ACCESS Integrated requests a modification to the arrangement.

7.2 Documentation. Upon request following the receipt of a bill or invoice from BellSouth for the outstanding balance of the actual Space Preparation Fee, BellSouth

shall provide documentation to establish the actual Space Preparation Fee. The Space Preparation Fee will be pro rated as prescribed in Section 6, preceding.

7.3 Cable Installation. Cable Installation Fee(s) are assessed per entrance fiber placed.

7.4 Floor Space. The floor space charge includes reasonable charges for lighting, HVAC, and other allocated expenses associated with maintenance of the Premises but does not include amperage necessary to power ACCESS Integrated's equipment. When the Collocation Space is enclosed, ACCESS Integrated shall pay floor space charges based upon the number of square feet so enclosed. When the Collocation Space is not enclosed, ACCESS Integrated shall pay floor space charges based upon the following floor space calculation: [(depth of the equipment lineup in which the rack is placed) + (0.5 x maintenance aisle depth) + (0.5 x wiring aisle depth)] X (width of rack and spacers). For purposes of this calculation, the depth of the equipment lineup shall consider the footprint of equipment racks plus any equipment overhang. BellSouth will assign unenclosed Collocation Space in conventional equipment rack lineups where feasible. In the event ACCESS Integrated's collocated equipment requires special cable racking, isolated grounding or other treatment which prevents placement within conventional equipment rack lineups, ACCESS Integrated shall be required to request an amount of floor space sufficient to accommodate the total equipment arrangement. Floor space charges are due beginning with the date on which BellSouth releases the Collocation Space for occupancy or on the date ACCESS Integrated first occupies the Collocation Space, whichever is sooner.

7.5 Power. BellSouth shall make available –48 Volt (-48V) DC power for ACCESS Integrated's Collocation Space at a BellSouth Power Board or BellSouth Batter Distribution Fuse Bay ("BDFB") at ACCESS Integrated's option within the Premises.

7.5.1 Recurring charges for -48V DC power will be assessed per ampere per month based upon the BellSouth Certified Supplier engineered and installed power feed fused ampere capacity. Rates include redundant feeder fuse positions (A&B) and common cable rack to ACCESS Integrated's equipment or space enclosure. When obtaining power from a BDFB, fuses and power cables (A&B) must be engineered (sized), and installed by ACCESS Integrated's BellSouth Certified Supplier. When obtaining power from a BellSouth power board, power cables (A&B) must be engineered (sized), and installed by ACCESS Integrated's BellSouth Certified power Supplier. ACCESS Integrated's BellSouth Certified Supplier must also provide a copy of the engineering power specification prior to the Commencement Date.

7.5.2 The non-recurring construction charge for construction of additional DC power plant or upgrade of the existing DC power plant in a Premises as a result of ACCESS Integrated's request to collocate in that Premises ("Power Plant Construction"), will be assessed per the nominal –48V DC ampere requirements specified by ACCESS Integrated on the physical collocation application. BellSouth reserves the right to monitor actual usage to verify accuracy of ACCESS Integrated's power requirements. ACCESS Integrated shall pay its pro-rated share of costs associated with the Power

Plant Construction, including but not limited to, standby AC plant elements, DC power plant elements, and the BDFB, where applicable. If ACCESS Integrated does not require power feeders from a BDFB, the BDFB component will not be applied to the Power Plant Construction charge. If ACCESS Integrated requires power feeders from both a BellSouth power board and a BellSouth BDFB, the Power Plant Construction charge will include all three components for the amount of nominal current fed from the BDFB, but will only include the standby AC and DC power plant components for the amount of nominal current fed from the power board. BellSouth shall comply with all BellCore (Telcordia) and ANSI Standards regarding power cabling, including BellCore (Telcordia) Network Equipment Building System (NEBS) StandardGR-63-CORE. The costs of Power Plant Construction shall be pro-rated and shared among all who benefit from that construction. ACCESS Integrated shall pay BellSouth one-half of its prorata share of the estimated Power Plant Construction costs prior to commencement of the work. ACCESS Integrated shall pay BellSouth the balance due (actual cost less one-half of the estimated cost) within thirty (30) calendar days of completion of the Power Plant Construction.

7.5.3 If BellSouth has not previously invested in power plant capacity for collocation at a specific site, ACCESS Integrated has the option to add its own dedicated power plant; provided, however, that such work shall be performed by a BellSouth Certified Supplier who shall comply with BellSouth's guidelines and specifications. Where the addition of ACCESS Integrated's dedicated power plant results in construction of a new power plant room, upon termination of this Agreement, ACCESS Integrated shall have the right to remove its equipment from the power plant room, but shall otherwise leave the room intact. ACCESS Integrated is responsible for contracting with a BellSouth Certified Supplier for power distribution feeder cable runs from a BellSouth BDFB or power board to ACCESS Integrated's equipment. When obtaining power from a BellSouth BDFB or miscellaneous fuse positions on a BellSouth power board, power cables must be engineered, furnished and installed by ACCESS Integrated using a BellSouth Certified power Supplier. Determination of the BellSouth BDFB or BellSouth power board as the power source will be made at BellSouth's sole, but reasonable, discretion. The BellSouth Certified Supplier contracted by ACCESS Integrated must provide BellSouth a copy of the engineering power specifications prior to the Commencement Date. BellSouth will provide the power feeder cable support structure between the BellSouth BDFB or power board and ACCESS Integrated's arrangement area. ACCESS Integrated shall contract a BellSouth Certified Supplier who will be responsible for the following: power cable support structure within ACCESS Integrated's arrangement; power cable feeds; terminations of cable. Any terminations at a BellSouth power board must be performed by a BellSouth Certified power Supplier. ACCESS Integrated shall comply with all applicable National Electric Code (NEC), BellSouth TR-73503, BellCore (Telcordia) and ANSI Standards regarding power cabling.

7.5.4 If ACCESS Integrated elects to install its own DC Power Plant, BellSouth shall provide AC power to feed ACCESS Integrated's DC Power Plant. Charges for AC

power will be assessed per breaker ampere per month. Rates include the provision of commercial and standby AC power. When obtaining power from a BellSouth service panel, protection devices and power cables must be engineered (sized), and installed by ACCESS Integrated's BellSouth Certified Supplier except that BellSouth shall engineer and install protection devices and power cables for Adjacent Collocation. ACCESS Integrated's BellSouth Certified Supplier must also provide a copy of the engineering power specification prior to the Commencement Date. Charges for AC power shall be assessed pursuant to the rates specified in Exhibit A. AC power voltage and phase ratings shall be determined on a per location basis. At ACCESS Integrated's option, ACCESS Integrated may arrange for AC power in an Adjacent Collocation arrangement from a retail provider of electrical power.

7.6 Security Escort. A security escort will be required whenever ACCESS Integrated or its approved agent desires access to the entrance manhole or must have access to the Premises after the one accompanied site visit allowed pursuant to Section 6.4.2 prior to completing BellSouth's Security Training requirements and/or prior to Space Acceptance. Rates for a security escort are assessed in one-half (1/2) hour increments according to the schedule appended hereto as Exhibit A.

7.7 Rate "True-Up". The Parties agree that the prices reflected as interim herein shall be "trued-up" (up or down) based on final prices either determined by further agreement or by final order, including any appeals, in a proceeding involving BellSouth before the regulatory authority for the state in which the services are being performed or any other body having jurisdiction over this Agreement (hereinafter "Commission"). Under the "true-up" process, the interim price for each service shall be multiplied by the volume of that service purchased to arrive at the total interim amount paid for that service ("Total Interim Price"). The final price for that service shall be multiplied by the volume purchased to arrive at the total final amount due ("Total Final Price"). The Total Interim Price shall be compared with the Total Final Price. If the Total Final Price is more than the Total Interim Price, ACCESS Integrated shall pay the difference to BellSouth. If the Total Final Price is less than the Total Interim Price, BellSouth shall pay the difference to ACCESS Integrated. Each Party shall keep its own records upon which a "true-up" can be based and any final payment from one Party to the other shall be in an amount agreed upon by the Parties based on such records. In the event of any disagreement as between the records or the Parties regarding the amount of such "true-up," the Parties agree that the Commission shall be called upon to resolve such differences.

7.8 Other. If no rate is identified in the contract, the rate for the specific service or function will be negotiated by the Parties upon request by either Party. Payment of all other charges under this Attachment shall be due thirty (30) calendar days after receipt of the bill (payment due date). ACCESS Integrated will pay a late payment charge of one and one-half percent (1-1/2%) assessed monthly on any balance which remains unpaid after the payment due date.

8. Insurance

8.1 ACCESS Integrated shall, at its sole cost and expense, procure, maintain, and keep in force insurance as specified in this Section 8 and underwritten by insurance companies licensed to do business in the states applicable under this Attachment and having a Best's Insurance Rating of A-.

8.2 ACCESS Integrated shall maintain the following specific coverage:

8.2.1 Commercial General Liability coverage in the amount of ten million dollars ($10,000,000.00) or a combination of Commercial General Liability and Excess/Umbrella coverage totaling not less than ten million dollars ($10,000,000.00). BellSouth shall be named as an Additional Insured on the Commercial General Liability policy as specified herein.

8.2.2 Statutory Workers Compensation coverage and Employers Liability coverage in the amount of one hundred thousand dollars ($100,000.00) each accident, one hundred thousand dollars ($100,000.00) each employee by disease, and five hundred thousand dollars ($500,000.00) policy limit by disease.

8.2.3 All Risk Property coverage on a full replacement cost basis insuring all of ACCESS Integrated's real and personal property situated on or within BellSouth's Central Office location(s).

8.2.4 ACCESS Integrated may elect to purchase business interruption and contingent business interruption insurance, having been advised that BellSouth assumes no liability for loss of profit or revenues should an interruption of service occur.

8.3 The limits set forth in Section 8.2 above may be increased by BellSouth from time to time during the term of this Attachment upon thirty (30) days notice to ACCESS Integrated to at least such minimum limits as shall then be customary with respect to comparable occupancy of BellSouth structures.

8.4 All policies purchased by ACCESS Integrated shall be deemed to be primary and not contributing to or in excess of any similar coverage purchased by BellSouth. All insurance must be in effect on or before the date equipment is delivered to BellSouth's Premises and shall remain in effect for the term of this Attachment or until all ACCESS Integrated's property has been removed from BellSouth's Premises, whichever period is longer. If ACCESS Integrated fails to maintain required coverage, BellSouth may pay the premiums thereon and seek reimbursement of same from ACCESS Integrated.

8.5 ACCESS Integrated shall submit certificates of insurance reflecting the coverage required pursuant to this Section a minimum of ten (10) business days prior to the commencement of any work in the Collocation Space. Failure to meet this interval may result in construction and equipment installation delays. ACCESS Integrated

shall arrange for BellSouth to receive thirty (30) business days' advance notice of cancellation from ACCESS Integrated's insurance company. ACCESS Integrated shall forward a certificate of insurance and notice of cancellation/non-renewal to BellSouth at the following address:

BellSouth Telecommunications, Inc.
Attn.: Risk Management Coordinator
675 W. Peachtree Street
Rm. 17H53
Atlanta, Georgia 30375

8.6 ACCESS Integrated must conform to recommendations made by BellSouth's fire insurance company to the extent BellSouth has agreed to, or shall hereafter agree to, such recommendations.

8.7 Self-Insurance. If ACCESS Integrated's net worth exceeds five hundred million dollars ($500,000,000), ACCESS Integrated may elect to request self-insurance status in lieu of obtaining any of the insurance required in Sections 8.2.1 and 8.2.3. ACCESS Integrated shall provide audited financial statements to BellSouth thirty (30) days prior to the commencement of any work in the Collocation Space. BellSouth shall then review such audited financial statements and respond in writing to ACCESS Integrated in the event that self-insurance status is not granted to ACCESS Integrated. If BellSouth approves ACCESS Integrated for self-insurance, ACCESS Integrated shall annually furnish to BellSouth, and keep current, evidence of such net worth that is attested to by one of ACCESS Integrated's corporate officers. The ability to self-insure shall continue so long as the ACCESS Integrated meets all of the requirements of this Section. If the ACCESS Integrated subsequently no longer satisfies this Section, ACCESS Integrated is required to purchase insurance as indicated by Sections 8.2.1 and 8.2.3.

8.8 The net worth requirements set forth in Section 8.7 may be increased by BellSouth from time to time during the term of this Attachment upon thirty (30) days' notice to ACCESS Integrated to at least such minimum limits as shall then be customary with respect to comparable occupancy of BellSouth structures.

8.9 Failure to comply with the provisions of this Section will be deemed a material breach of this Attachment.

9. Mechanics Liens

9.1 If any mechanics lien or other liens shall be filed against property of either Party (BellSouth or ACCESS Integrated), or any improvement thereon by reason of or arising out of any labor or materials furnished or alleged to have been furnished or to be furnished to or for the other Party or by reason of any changes, or additions to said property made at the request or under the direction of the other Party, the other Party

directing or requesting those changes shall, within thirty (30) business days after receipt of written notice from the Party against whose property said lien has been filed, either pay such lien or cause the same to be bonded off the affected property in the manner provided by law. The Party causing said lien to be placed against the property of the other shall also defend, at its sole cost and expense, on behalf of the other, any action, suit or proceeding which may be brought for the enforcement of such liens and shall pay any damage and discharge any judgment entered thereon.

10. Inspections

10.1 BellSouth shall conduct an inspection of ACCESS Integrated's equipment and facilities in the Collocation Space(s) prior to the activation of facilities between ACCESS Integrated's equipment and equipment of BellSouth. BellSouth may conduct an inspection if ACCESS Integrated adds equipment and may otherwise conduct routine inspections at reasonable intervals mutually agreed upon by the Parties. BellSouth shall provide ACCESS Integrated with a minimum of forty-eight (48) hours or two (2) business days, whichever is greater, advance notice of all such inspections. All costs of such inspection shall be borne by BellSouth.

11. Security and Safety Requirements

11.1 The security and safety requirements set forth in this section are as stringent as the security requirements BellSouth maintains at its own premises either for their own employees or for authorized contractors. Only BellSouth employees, BellSouth Certified Contractors and authorized employees, authorized Guests, pursuant to Section 3.3, preceding, or authorized agents of ACCESS Integrated will be permitted in the BellSouth Premises. ACCESS Integrated shall provide its employees and agents with picture identification which must be worn and visible at all times while in the Collocation Space or other areas in or around the Premises. The photo Identification card shall bear, at a minimum, the employee's name and photo, and the ACCESS Integrated name. BellSouth reserves the right to remove from its premises any employee of ACCESS Integrated not possessing identification issued by ACCESS Integrated or who have violated any of BellSouth's policies as outlined in the CLEC Security Training documents. ACCESS Integrated shall hold BellSouth harmless for any damages resulting from such removal of its personnel from BellSouth premises. ACCESS Integrated shall be solely responsible for ensuring that any Guest of ACCESS Integrated is in compliance with all subsections of this Section 11.

11.1.1 ACCESS Integrated will be required, at its own expense, to conduct a statewide investigation of criminal history records for each ACCESS Integrated employee being considered for work on the BellSouth Premises, for the states/counties where the ACCESS Integrated employee has worked and lived for the past five years. Where

state law does not permit statewide collection or reporting, an investigation of the applicable counties is acceptable.

11.1.2 ACCESS Integrated will be required to administer to their personnel assigned to the BellSouth Premises security training either provided by BellSouth, or meeting criteria defined by BellSouth.

11.1.3 ACCESS Integrated shall not assign to the BellSouth Premises any personnel with records of felony criminal convictions. ACCESS Integrated shall not assign to the BellSouth Premises any personnel with records of misdemeanor convictions, except for misdemeanor traffic violations, without advising BellSouth of the nature and gravity of the offense(s). BellSouth reserves the right to refuse building access to any ACCESS Integrated personnel who have been identified to have misdemeanor criminal convictions. Notwithstanding the foregoing, in the even that ACCESS Integrated chooses not to advise BellSouth of the nature and gravity of any misdemeanor conviction, ACCESS Integrated may, in the alternative, certify to BellSouth that it shall not assign to the BellSouth Premises any personnel with records of misdemeanor convictions (other than misdemeanor traffic violations).

11.1.4 For each ACCESS Integrated employee requiring access to a BellSouth Premises pursuant to this Attachment, ACCESS Integrated shall furnish BellSouth, prior to an employee gaining such access, a certification that the aforementioned background check and security training were completed. The certification will contain a statement that no felony convictions were found and certifying that the security training was completed by the employee. If the employee's criminal history includes misdemeanor convictions, ACCESS Integrated will disclose the nature of the convictions to BellSouth at that time. In the alternative, ACCESS Integrated may certify to BellSouth that it shall not assign to the BellSouth Premises any personnel with records of misdemeanor convictions other than misdemeanor traffic violations.

11.1.5 At BellSouth's request, ACCESS Integrated shall promptly remove from the BellSouth's Premises any employee of ACCESS Integrated BellSouth does not wish to grant access to its premises 1) pursuant to any investigation conducted by BellSouth or 2) prior to the initiation of an investigation in the event that an employee of ACCESS Integrated is found interfering with the property or personnel of BellSouth or another CLEC, provided that an investigation shall promptly be commenced by BellSouth.

11.2 Notification to BellSouth. BST reserves the right to interview ACCESS Integrated's employees, agents, or contractors in the event of wrongdoing in or around BellSouth's property or involving BellSouth's or another CLEC's property or personnel, provided that BellSouth shall provide reasonable notice to ACCESS Integrated's Security contact of such interview. ACCESS Integrated and its contractors shall reasonably cooperate with BellSouth's investigation into allegations of wrongdoing or criminal conduct committed by, witnessed by, or involving ACCESS Integrated's employees, agents, or contractors. Additionally, BellSouth reserves the right to bill ACCESS

Integrated for all reasonable costs associated with investigations involving its employees, agents, or contractors if it is established and mutually agreed in good faith that ACCESS Integrated's employees, agents, or contractors are responsible for the alleged act. BellSouth shall bill ACCESS Integrated for BellSouth property which is stolen or damaged where an investigation determines the culpability of ACCESS Integrated's employees, agents, or contractors and where ACCESS Integrated agrees, in good faith, with the results of such investigation. ACCESS Integrated shall notify BellSouth in writing immediately in the event that the CLEC discovers one of its employees already working on the BellSouth premises is a possible security risk. Upon request of the other Party, the Party who is the employer shall discipline consistent with its employment practices, up to and including removal from the BellSouth Premises, any employee found to have violated the security and safety requirements of this section. ACCESS Integrated shall hold BellSouth harmless for any damages resulting from such removal of its personnel from BellSouth premises.

11.3 Use of Supplies. Unauthorized use of telecommunications equipment or supplies either Party, whether or not used routinely to provide telephone service (e.g. plug-in cards,) will be strictly prohibited and handled appropriately. Costs associated with such unauthorized use may be charged to the offending Party, as may be all associated investigative costs.

11.4 Use of Official Lines. Except for non-toll calls necessary in the performance of their work, neither Party shall use the telephones of the other Party on the BellSouth Premises. Charges for unauthorized telephone calls may be charged to the offending Party, as may be all associated investigative costs.

11.5 Accountability. Full compliance with the Security requirements of this section shall in no way limit the accountability of either Party to the other for the improper actions of its employees.

12. Destruction of Collocation Space

12.1 In the event a Collocation Space is wholly or partially damaged by fire, windstorm, tornado, flood or by similar causes to such an extent as to be rendered wholly unsuitable for ACCESS Integrated's permitted use hereunder, then either Party may elect within ten (10) business days after such damage, to terminate this Attachment, and if either Party shall so elect, by giving the other written notice of termination, both Parties shall stand released of and from further liability under the terms hereof. If the Collocation Space shall suffer only minor damage and shall not be rendered wholly unsuitable for ACCESS Integrated's permitted use, or is damaged and the option to terminate is not exercised by either Party, BellSouth covenants and agrees to proceed promptly without expense to ACCESS Integrated, except for improvements not the property of BellSouth, to repair the damage. BellSouth shall have a reasonable time within which to rebuild or make any repairs, and such rebuilding and repairing shall be subject to delays caused by storms, shortages of labor and materials,

government regulations, strikes, walkouts, and causes beyond the control of BellSouth, which causes shall not be construed as limiting factors, but as exemplary only. ACCESS Integrated may, at its own expense, accelerate the rebuild of its collocated space and equipment provided however that a BellSouth Certified Contractor is used and the necessary space preparation has been completed. Rebuild of equipment must be performed by a BellSouth Certified Vendor. If ACCESS Integrated's acceleration of the project increases the cost of the project, then those additional charges will be incurred by ACCESS Integrated. Where allowed and where practical, ACCESS Integrated may erect a temporary facility while BellSouth rebuilds or makes repairs. In all cases where the Collocation Space shall be rebuilt or repaired, ACCESS Integrated shall be entitled to an equitable abatement of rent and other charges, depending upon the unsuitability of the Collocation Space for ACCESS Integrated's permitted use, until such Collocation Space is fully repaired and restored and ACCESS Integrated's equipment installed therein (but in no event later than thirty (30) business days after the Collocation Space is fully repaired and restored). Where ACCESS Integrated has placed an Adjacent Arrangement pursuant to section 3.4, ACCESS Integrated shall have the sole responsibility to repair or replace said Adjacent Arrangement provided herein. Pursuant to this section, BellSouth will restore the associated services to the Adjacent Arrangement.

13. Eminent Domain

13.1 If the whole of a Collocation Space or Adjacent Arrangement shall be taken by any public authority under the power of eminent domain, then this Attachment shall terminate with respect to such Collocation Space or Adjacent Arrangement as of the day possession shall be taken by such public authority and rent and other charges for the Collocation Space or Adjacent Arrangement shall be paid up to that day with proportionate refund by BellSouth of such rent and charges as may have been paid in advance for a period subsequent to the date of the taking. If any part of the Collocation Space or Adjacent Arrangement shall be taken under eminent domain, BellSouth and ACCESS Integrated shall each have the right to terminate this Attachment with respect to such Collocation Space or Adjacent Arrangement and declare the same null and void, by written notice of such intention to the other Party within ten (10) business days after such taking.

14. Nonexclusivity

14.1 ACCESS Integrated understands that this Attachment is not exclusive and that BellSouth may enter into similar agreements with other Parties. Assignment of space pursuant to all such agreements shall be determined by space availability and made on a first come, first served basis.

EXHIBIT A: BELLSOUTH/ACCESS Integrated RATES – ALABAMA PHYSICAL COLLOCATION

Rates marked with an asterisk (*) are interim and are subject to true-up

USOC	Rate Element Description	Unit	Recurring Rate (RC)	Non-Recurring Rate (NRC)
PE1BA	Application Fee	Per request	NA	$7,124.00 Disconnect Charge $1.73
PE1CA	Subsequent Application Fee **(Note 1)**	Per request	NA	$1,600.00 Minimum
PE1BB	Space Preparation Fee **(Note 2)**			
	Mechanical / HVAC*	Per ton (one ton minimum)		$2,400.00
PE1SB	Ground Bar*	Per connection		$720.00
PE1SC	Project Management*	Per arrangement		$1,675.00
PE1SD	Cable Racking / Fiber Duct	Per arrangement, sq. ft.		ICB
PE1SE	Frame / Aisle Lighting	Per arrangement, sq. ft.		ICB
PE1SG	Framework Ground Conductors	Per arrangement		ICB
PE1SH	Extraordinary Modifications	Per arrangement		ICB
	Space Enclosure **(Note 3)**			
PE1BW	Welded Wire-mesh	Per first 100 sq. ft.	$136.64	NA
PE1CW	Welded Wire-mesh	Per add'l 50 sq. ft.	$15.85	NA
PE1PJ	Floor Space	Per sq. ft.	$3.85	NA
PE1BD	Cable Installation	Per cable	NA	$2,335.00
PE1PM	Cable Support Structure	Per entrance cable	$23.23	NA
	Power			
PE1PL	-48V DC Power	Per amp	$7.14	ICB
PE1FB	120V AC Power single phase*	Per breaker amp	$5.50	ICB
PE1FD	240V AC Power single phase*	Per breaker amp	$11.00	ICB
PE1FE	120V AC Power three phase*	Per breaker amp	$16.50	ICB
PE1FG	277 AC Power three phase*	Per breaker amp	$38.20	ICB
	Cross Connects **(Note 4)**	Per cross connect		First/Add'l
PE1P2	2-wire		$.28	$30.76/$29.40
PE1P4	4-wire		$.56	$31.01/$29.58
PE1P1	DS-1		$2.14	$60.81/$41.71
PE1P3	DS-3		$38.63	$57.80/$39.81

ALABAMA (continued)				
USOC	**Rate Element Description**	**Unit**	**Recurring Rate (RC)**	**Non-Recurring Rate (NRC)**
	Cross Connects (continued)	Per cross connect		First/Add'l
PE1F2	2-fiber		$12.10	$55.46/$39.18
PE1F4	4-fiber		$21.75	$66.71/$50.43
				Disconnect Charges
				First/Add'l
	2-wire			$12.75/$11.38
	4-wire			$12.82/$11.39
	DS-1			$12.85/$11.50
	DS-3			$14.93/$11.76
	2-fiber			$16.83/$13.27
	4-fiber			$21.86/$18.31
	Co-Carrier Cross-Connect **(Note 5)**			
PE1ES Fiber	Fiber Cable Support Structure, existing	Per linear ft.	$0.06	NA
PE1DS Copper	Copper or Coaxial Cable Support Structure, existing	Per linear ft.	$0.03	NA
(TBD)	Cable Support Structure Construction, new	Per new construction	NA	ICB
PE1AX	Security Access System Security System*	Per central office	$52.00	
	New Access Card Activation*	Per card		$55.00
PE1AA	Administrative change, existing card*	Per card		$35.00
PE1AR	Replace lost or stolen card*	Per card		$250.00
PE1SR	Space Availability Report*	Per premises requested		$550.00
	POT Bay Arrangements *Prior to 6/1/99*	Per cross connect		
PE1PE	2-Wire Cross-Connect		$0.08	NA
PE1PF	4-Wire Cross-Connect		$0.17	NA
PE1PG	DS1 Cross-Connect		$0.69	NA
PE1PH	DS3 Cross-Connect		$4.74	NA
PE1B2	2-Fiber Cross-Connect		$32.02	NA
PE1B4	4-Fiber Cross-Connect		$40.48	NA

ALABAMA (continued)				
USOC	**Rate Element Description**	**Unit**	**Recurring Rate (RC)**	**Non-Recurring Rate (NRC)**
AEH	Additional Engineering Fee **(Note 6)**	Per request, First half hour/add'l half hour		First/Add'l Basic Time $31.00/$22.00 Overtime $37.00/$26.00
	Security Escort	Per half hr/add'l half hr		
PE1BT	Basic Time		NA	$43.47/$25.82
PE1OT	Overtime		NA	$55.25/$32.79
PE1PT	Premium Time		NA	$67.03/$39.76

Note(s):

N/A refers to rate elements which do not have a negotiated rate.

(1) **Subsequent Application Fee:** BellSouth requires the submission of an Application Fee for modifications to an existing arrangement. However, when the modifications do not require BellSouth assessment related to expenditure of capital, BellSouth will assess the Subsequent Application Fee in lieu of the Application Fee. Proposed modifications that could result in assessment of a Subsequent Application Fee would cause BellSouth to analyze the following but are not limited to: floor loading changes, changes to HVAC requirements, power requirement changes which may result in a power plant upgrade, environmental or safety requirements, or equipment relocation. Should the Subsequent Application Fee not be included as part of this Attachment, ACCESS Integrated will be assessed the full Application Fee for all subsequent activity for completed arrangements.

(2) **Space Preparation Fee**: The Space Preparation Fee is a one-time fee, assessed per arrangement, per location. It recovers the costs associated with the shared physical collocation area within a Premises, which include survey, engineering, design and modification costs for network, building and support systems. In the event ACCESS Integrated opts for non-enclosed space, the space preparation fee will be assessed based on the total floor space dedicated to ACCESS Integrated as prescribed in Section 7 of the Collocation Attachment.

(3) **Space Enclosure**: The Space Enclosure Construction Fee is a monthly recurring fee, assessed per enclosure, per location with a one-hundred (100) square foot minimum enclosure. It recovers costs associated with providing an optional equipment arrangement enclosure, which include architectural and engineering fees, materials, and installation costs. The cost for additional square feet is applicable only when ordered with the first 100 square feet and must be requested in fifty (50) square foot increments. ACCESS Integrated may, at its option, arrange with a BellSouth Certified Contractor to construct the space enclosure in accordance with BellSouth's guidelines and specifications. In this event, the BellSouth Certified Contractor shall directly bill ACCESS Integrated for the space enclosure, and this fee shall not be applicable.

EXHIBIT A: BELLSOUTH/ACCESS Integrated RATES – ALABAMA
PHYSICAL COLLOCATION (continued)

(4) **Cross Connects**: The charges for cross connects are for orders placed electronically. Cross connect elements may also be ordered manually for which there is an additional charge per element.

		Disconnect Charges
	First / Additional	First / Additional
2-wire	$34.03 / $32.67	$14.48 / $13.11
4-wire	$34.28 / $32.85	$14.55 / $13.12
DS-1	$64.08 / $44.98	$14.58 / $13.23
DS-3	$61.07 / $43.08	$16.66 / $13.49

(5) **Co-Carrier Cross-Connect:** As stated in Section 1.2 of the Collocation Attachment, ACCESS Integrated may connect to other CLECs within the designated Premises in addition to, and not in lieu of, interconnection to BellSouth services and facilities. Where BellSouth must construct a cable rack structure to house the co-Carrier cross connection, construction charges will be applied on an individual case basis as described in Section 5.6.1 of the Collocation Attachment. BellSouth shall provide an estimate of these charges in the Application Response. Where an existing cable rack structure is in place and has sufficient capacity to accommodate the co-Carrier cross connection requested, the recurring charges as stated in this Exhibit A shall apply.

(6) **Additional Engineering Fee**: BellSouth's additional engineering, and other labor costs associated with handling ACCESS Integrated-requested modifications to requests in progress or augmentations to existing arrangements shall be recovered as Additional Engineering charges, under provisions in BellSouth's F.C.C. Number 1 Tariff, Sections 13.1 and 13.2. Should Additional Engineering rates not be included, ACCESS Integrated agrees not to make changes to collocation arrangement after a Bona Fide Firm Order is submitted.

EXHIBIT A: BELLSOUTH/ACCESS Integrated RATES – FLORIDA PHYSICAL COLLOCATION

Rates marked with an asterisk (*) are interim and are subject to true-up

USOC	Rate Element Description	Unit	Recurring Rate (RC)	Non-Recurring Rate (NRC)
PE1BA	Application Fee	Per request	$15.53	$3,248.00
PE1CA	Subsequent Application Fee **(Note 1)**	Per request	NA	$1,600.00 Minimum
PE1BB	Space Preparation Fee **(Note 2)**			
	Mechanical / HVAC*	Per ton (one ton minimum)		$2,400.00
PE1SB	Ground Bar*	Per connection		$720.00
PE1SC	Project Management*	Per arrangement		$1,675.00
PE1SD	Cable Racking / Fiber Duct	Per arrangement, sq. ft.		ICB
PE1SE	Frame / Aisle Lighting	Per arrangement, sq. ft.		ICB
PE1S	Framework Ground Conductors	Per arrangement		ICB
PE1SH	Extraordinary Modifications	Per arrangement		ICB
	Space Enclosure **(Note 3)**			
PE1BW	Wire Cage	Per first 100 sq. ft.	$41.99	NA
PE1BC	Gypsum Board Cage	Per first 100 sq. ft	$84.10	NA
PE1BF	Fire Rated Cage	Per first 100 sq. ft.	$99.73	NA
PE1CW	Wire Cage	Per add'l 50 sq. ft.	$4.14	NA
PE1CC	Gypsum Board Cage	Per add'l 50 sq. ft.	$9.35	NA
PE1CF	Fire Rated Cage	Per add'l 50 sq. ft.	$11.30	NA
PE1PJ	Floor Space	Per sq. ft.	$4.25	NA
PE1BD	Cable Installation	Per cable	$2.77	$1,056.00
PE1PM	Cable Support Structure		$22.94	NA
	Power			
PE1PL	-48V DC Power	Per amp	$6.95	ICB
PE1FB	120V AC Power single phase*	Per breaker amp	$5.50	ICB
PE1FD	240V AC Power single phase*	Per breaker amp	$11.00	ICB
PE1FE	120V AC Power three phase*	Per breaker amp	$16.50	ICB
PE1FG	277 AC Power three phase*	Per breaker amp	$38.20	ICB
	Cross Connects **(Note 4)**	Per cross connect		
PE1P2	2-wire		$.0524	$11.57
PE1P4	4-wire		$.0524	$11.57

FLORIDA (continued)				
USOC	**Rate Element Description**	**Unit**	**Recurring Rate (RC)**	**Non-Recurring Rate (NRC)**
	Cross Connects (continued)	Per cross connect		
PE11S	DS-1/DCS		$8.085	$69.64
PE1P1	DS-1/DSX		$.4110	$69.64
PE13S	DS-3/DCS		$56.97	$528.00
PE13X	DS-3/DSX		$10.06	$528.00
PE1F2	Optical Cross Connects		$6.46	$2,431.00
	Co-Carrier Cross-Connect **(Note 5)**			
PE1ES Fiber	Fiber Cable Support Structure, existing	Per linear ft.	$0.06	NA
PE1DS Copper	Copper or Coaxial Cable Support Structure, existing	Per linear ft.	$0.03	NA
(TBD)	Cable Support Structure Construction, new	Per new construction	NA	ICB
PE1AX	Security Access System Security System*	Per premises	$52.00	
	New Access Card Activation*	Per request 5 cards	NA	$85.12
PE1AA	Administrative change, existing card*	Per card		$35.00
PE1AR	Replace lost or stolen card*	Per card		$250.00
PE1SR	Space Availability Report*	Per premises requested		$550.00
	POT Bay **(Note 6)**		NA	NA
AEH	Additional Engineering Fee **(Note 7)**	Per request, First half hour/add'l half hour		First/Add'l Basic Time $31.00/$22.00 Overtime $37.00/$26.00
	Security Escort	Per ¼ hour		
PE1BT	Basic Time		NA	$10.89
PE1OT	Overtime		NA	$13.64
PE1PT	Premium Time		NA	$16.40

EXHIBIT A: BELLSOUTH/ACCESS Integrated RATES – FLORIDA PHYSICAL COLLOCATION (continued)

Note(s):

N/A refers to rate elements which do not have a negotiated rate.

(1) **Subsequent Application Fee**: BellSouth requires the submission of an Application Fee for modifications to an existing arrangement. However, when the modifications do not require BellSouth to expend capital, BellSouth will assess the Subsequent Application Fee in lieu of the Application Fee. Proposed modifications that could result in assessment of a Subsequent Application Fee would cause BellSouth to analyze the following but are not limited to: floor loading changes, changes to HVAC requirements, power requirement changes which may result in a power plant upgrade, environmental or safety requirements, or equipment relocation. Should the Subsequent Application Fee not be included as part of this Attachment, ACCESS Integrated will be assessed the full Application Fee for all subsequent activity for completed arrangements.

(2) **Space Preparation Fee**: The Space Preparation Fee is a one-time fee, assessed per arrangement, per location. It recovers costs associated with the shared physical collocation area within a Premises, which include survey, engineering, design and modification costs for network, building and support systems. BellSouth will pro rate the total shared space preparation costs among the collocators at each location based on the amount of square footage occupied by each collocator. This charge may vary depending on the location and type of arrangement requested.

(3) **Space Enclosure Fee**: The Space Enclosure Construction Fee is a monthly recurring fee, assessed per enclosure, per location with a one-hundred (100) square foot minimum enclosure. It recovers costs associated with providing an optional equipment arrangement enclosure, which include architectural and engineering fees, materials, and installation costs. The cost for additional square feet is applicable only when ordered with the first 100 square feet and must be requested in fifty (50) square foot increments. ACCESS Integrated may, at its option, arrange with a BellSouth Certified Contractor to construct the space enclosure in accordance with BellSouth's guidelines and specifications. In this event, the BellSouth Certified Contractor shall directly bill ACCESS Integrated for the space enclosure, and this fee shall not be applicable.

(4) **Cross Connects**: Rates shown are the equivalent per cross connect rates based on the Florida PSC Ordered rates as follows:

Cross Connects	Per Cross Connect	RC	NRC
2-wire	Per 100 X-Connects	$5.24	$1,157.00
4-wire	Per 100 X-Connects	$5.24	$1,157.00
DS-1/DCS	Per 28 X-Connects	$226.39	$1,950.00
DS-1/DSX	Per 28 X-Connects	$11.51	$1,950.00
DS-3/DCS	Per Cross Connect	$56.97	$ 528.00
DS-3/DSX	Per Cross Connect	$10.06	$528.00
Optical Cross Connects	Per Cross Connect	$6.46	$2,431.00

EXHIBIT A: BELLSOUTH/ACCESS Integrated RATES – FLORIDA PHYSICAL COLLOCATION (continued)

(5) **Co-Carrier Cross-Connect**. As stated in Section 5 of the Collocation Attachment, ACCESS Integrated may connect to other CLECs within the designated Premises in addition to, and not in lieu of, interconnection to BellSouth services and facilities. Where BellSouth must construct a cable rack structure to house the direct connection, construction charges will be applied on an individual case basis as described in Section 5.6.1 of the Collocation Attachment. BellSouth shall provide an estimate of these charges in the Application Response. Where an existing cable rack structure is in place and has sufficient capacity to accommodate the direct connection requested, the recurring charges as stated in this Exhibit A shall apply.

(6) **POT Bays**: BellSouth's Florida specific rates were established in the Florida Public Service Commission Docket No. 960833. The Commission did not set permanent rates for POT Bays, given the assumption by the Parties to the Proceeding that they will always provide their own POT Bays. It will be necessary for ACCESS Integrated to provide its own POT Bays per BellSouth specifications and provide the necessary information from which BellSouth can inventory.

(7) **Additional Engineering Fee**: BellSouth's additional engineering, and other labor costs associated with handling ACCESS Integrated-requested modifications to requests in progress or augmentations to existing arrangements shall be recovered as Additional Engineering charges, under provisions in BellSouth's F.C.C. Number 1 Tariff, Sections 13.1 and 13.2. Should Additional Engineering rates not be included, ACCESS Integrated agrees not to make changes to collocation arrangement after a Bona Fide Firm Order is submitted.

EXHIBIT A: BELLSOUTH/ACCESS Integrated RATES – GEORGIA PHYSICAL COLLOCATION

Rates marked with an asterisk (*) are interim and subject to true-up

USOC	Rate Element Description	Unit	Recurring Rate (RC)	Non-Recurring Rate (NRC)
PE1BA	Application Fee	Per request	NA	$3,850.00
PE1CA	Subsequent Application Fee **(Note 1)**	Per request	NA	$1,600.00 Minimum
PE1BB	Space Preparation Fee **(Note 2)**	Per sq. ft.	NA	$100.00
	Space Enclosure **(Note 3)**			
PE1BW	Welded Wire-mesh	Per first 100 sq. ft.	$170.64	NA
PE1CW	Welded Wire-mesh	Per add'l 50 sq. ft.	$17.33	NA
	Floor Space			
PE1PJ	Zone A	Per sq. ft.	$7.50	NA
PE1PK	Zone B	Per sq. ft.	$6.75	NA
PE1BD	Cable Installation	Per cable	NA	$2,750.00
PE1PM	Cable Support Structure	Per entrance cable	$13.35	NA
	Power			
PE1PL	-48V DC Power	Per amp	$5.00	ICB
PE1FB	120V AC Power single phase*	Per breaker amp	$5.50	ICB
PE1FD	240V AC Power single phase*	Per breaker amp	$11.00	ICB
PE1FE	120V AC Power three phase*	Per breaker amp	$16.50	ICB
PE1FG	277 AC Power three phase*	Per breaker amp	$38.20	ICB
	Cross Connects	Per cross connect		First/Add'l
PE1P2	2-wire		$0.30	$12.60/$12.60
PE1P4	4-wire		$0.50	$12.60/$12.60
PE1P1	DS-1		$8.00	$155.00/$27.00
PE1P3	DS-3		$72.00	$155.00/$27.00
PE1F2	2-fiber		$15.64	$41.56/$29.82
PE1F4	4-fiber		$28.11	$50.53/$38.78
	Co-Carrier Cross-Connect (Note 4)			
PE1ES Fiber	Fiber Cable Support Structure, existing	Per linear ft.	$0.06	NA
PE1DS Copper	Copper or Coaxial Cable Support Structure, existing	Per linear ft.	$0.03	NA
(TBD)	Cable Support Structure Construction, new	Per new construction	NA	ICB

GEORGIA (continued)				
USOC	**Rate Element Description**	**Unit**	**Recurring Rate (RC)**	**Non-Recurring Rate (NRC)**
PE1AX	Security Access System Security System*	Per premises	$52.00	
	New Access Card Activation*	Per card		$55.00
PE1AA	Administrative change, existing card*	Per card		$35.00
PE1AR	Replace lost or stolen card*	Per card		$250.00
PE1SR	Space Availability Report*	Per premises requested		$550.00
	POT Bay Arrangements *Prior to 6/1/99*	Per cross-connect		
PE1PE	2-Wire Cross-Connect		$0.40	NA
PE1PF	4-Wire Cross-Connect		$1.20	NA
PE1PG	DS1 Cross-Connect		$1.20	NA
PE1PH	DS3 Cross-Connect		$8.00	NA
PE1B2	2 Fiber Cross-Connect		$38.79	NA
PE1B4	4 Fiber Cross-Connect		$52.31	NA
AEH	Additional Engineering Fee **(Note 5)**	Per request, First half hour/add'l half hour		First/Add'l Basic Time $31.00/$22.00 Overtime $37.00/$26.00
	Security Escort	Per half hr./Add'l half hr.		
PE1BT	Basic Time		NA	$41.00/$25.00
PE1OT	Overtime		NA	$48.00/$30.00
PE1PT	Premium Time		NA	$55.00/$35.00

Note(s)

N/A refers to rate elements which do not have a negotiated rate.

(1) **Subsequent Application Fee**: BellSouth requires the submission of an Application Fee for modifications to an existing arrangement. However, when the modifications do not require BellSouth to expend capital, BellSouth will assess the Subsequent Application Fee in lieu of the Application Fee. Proposed modifications that could result in assessment of a Subsequent Application Fee would cause BellSouth to analyze the following but are not limited to: floor loading changes, changes to HVAC requirements, power requirement changes which may result in a power plant upgrade, environmental or safety requirements, or equipment relocation. Should the Subsequent Application Fee not be included as part of this Attachment, ACCESS Integrated will be assessed the full Application Fee for all subsequent activity for completed arrangements.

EXHIBIT A: BELLSOUTH/ACCESS Integrated RATES – GEORGIA PHYSICAL COLLOCATION (continued)

(2) **Space Preparation Fee**: The Space Preparation Fee is a one-time fee, assessed per arrangement, per location. It recovers a portion of costs associated with the shared physical collocation area within a Premises, which include survey, engineering, design and modification costs for network, building and support systems. This is a set fee of $100 per square foot as established by the Georgia Public Service Commission Order in Docket No. 7061-U. In the event ACCESS Integrated opts for non-enclosed space, the space preparation fee will be assessed based on the total floor space dedicated to ACCESS Integrated as prescribed in Section 7 of the Collocation Attachment.

(3) **Space Enclosure Fee**: The Space Enclosure Construction Fee is a one-time fee, assessed per enclosure, per location with a one-hundred (100) square foot minimum enclosure. It recovers costs associated with providing an optional equipment arrangement enclosure, which include architectural and engineering fees, materials, and installation costs. The cost for additional square feet is applicable only when ordered with the first 100 square feet and must be requested in fifty (50) square foot increments. ACCESS Integrated may, at its option, arrange with a BellSouth Certified Contractor to construct the space enclosure in accordance with BellSouth's guidelines and specifications. In this event, the BellSouth Certified Contractor shall directly bill ACCESS Integrated for the space enclosure, and this fee shall not be applicable.

(4) **Co-Carrier Cross-Connect**. As stated in Section 5 of the Collocation Attachment, ACCESS Integrated may connect to other CLECs within the designated Premises in addition to, and not in lieu of, interconnection to BellSouth services and facilities. Where BellSouth must construct a cable rack structure to house the co-Carrier cross connection, construction charges will be applied on an individual case basis as described in Section 5.6.1 of the Collocation Attachment. BellSouth shall provide an estimate of these charges in the Application Response. Where an existing cable rack structure is in place and has sufficient capacity to accommodate the co-Carrier cross-connection requested, the recurring charges as stated in this Exhibit A shall apply.

(5) **Additional Engineering Fee**: BellSouth's additional engineering, and other labor costs associated with handling ACCESS Integrated-requested modifications to requests in progress or augmentations to existing arrangements shall be recovered as Additional Engineering charges, under provisions in BellSouth's F.C.C. Number 1 Tariff, Sections 13.1 and 13.2. Should Additional Engineering rates not be included, ACCESS Integrated agrees not to make changes to collocation arrangement after a Bona Fide Firm Order is submitted.

EXHIBIT A: BELLSOUTH/ACCESS Integrated RATES – KENTUCKY PHYSICAL COLLOCATION

Rates marked with an asterisk (*) are interim and are subject to true-up.

USOC	Rate Element Description	Unit	Recurring Rate (RC)	Non-Recurring Rate (NRC)
PE1BA	Application Fee	Per request	NA	$9,926.72
PE1CA	Subsequent Application Fee **(Note 1)**	Per request	NA	$1,600.00 Minimum
PE1BB	Space Preparation Fee **(Note 2)**			
	Mechanical / HVAC*	Per ton (one ton minimum)		$2,400.00
PE1SB	Ground Bar*	Per connection		$720.00
PE1SC	Project Management*	Per arrangement		$1,675.00
PE1SD	Cable Racking / Fiber Duct	Per arrangement, sq. ft.		ICB
PE1SE	Frame / Aisle Lighting	Per arrangement, sq. ft.		ICB
PE1S	Framework Ground Conductors	Per arrangement		ICB
PE1SH	Extraordinary Modifications	Per arrangement		ICB
	Space Enclosure **(Note 3)**			
PE1BW	Welded Wire-mesh	Per first 100 sq. ft.	$201.02	NA
PE1CW	Welded Wire-mesh	Per add'l 50 sq. ft.	$20.42	NA
PE1PJ	Floor Space	Per sq. ft.	$5.00	NA
PE1BD	Cable Installation	Per cable	NA	$2,327.08
PE1PM	Cable Support Structure	Per entrance cable	$24.23	NA
	Power			
PE1PL	-48V DC Power	Per amp	$7.68	ICB
PE1FB	120V AC Power single phase*	Per breaker amp	$5.50	ICB
PE1FD	240V AC Power single phase*	Per breaker amp	$11.00	ICB
PE1FE	120V AC Power three phase*	Per breaker amp	$16.50	ICB
PE1FG	277 AC Power three phase*	Per breaker amp	$38.20	ICB
	Cross Connects	Per cross connect		First/Add'l
PE1P2	2-wire		$0.31	$54.21/$51.07
PE1P4	4-wire		$0.62	$54.23/$50.96
PE1P1	DS-1		$1.92	$99.23/$69.15
PE1P3	DS-3		$39.94	$97.48/$66.90
PE1F2	2-fiber		$15.64	$41.56/$29.82
PE1F4	4-fiber		$28.11	$50.53/$38.78

KENTUCKY (continued)				
USOC	**Rate Element Description**	**Unit**	**Recurring Rate (RC)**	**Non-Recurring Rate (NRC)**
	Co-Carrier Cross-Connect **(Note 4)**			
PE1ES Fiber	Fiber Cable Support Structure, existing	Per linear ft.	$0.06	NA
PE1DS Copper	Copper or Coaxial Cable Support Structure, existing	Per linear ft.	$0.03	NA
(TBD)	Cable Support Structure Construction, new	Per new construction	NA	ICB
PE1AX	Security Access System Security System*	Per premises	$52.00	
	New Access Card Activation	Per card		$55.00
PE1AA	Administrative change, existing card	Per card		$35.00
PE1AR	Replace lost or stolen card	Per card		$250.00
PE1SR	Space Availability Report	Per premises requested		$550.00
	POT Bay Arrangements *Prior to 6/1/99*	Per cross-connect		
PE1PE	2-Wire Cross-Connect		$0.06	NA
PE1PF	4-Wire Cross-Connect		$0.15	NA
PE1PG	DS1 Cross-Connect		$0.58	NA
PE1PH	DS3 Cross-Connect		$4.51	NA
PE1B2	2 Fiber Cross-Connect		$38.79	NA
PE1B4	4 Fiber Cross-Connect		$52.31	NA
	Security Escort	Per half hr./Add'l half hr.		
PE1BT	Basic Time		NA	$56.09/$31.99
PE1OT	Overtime		NA	$67.75/$39.00
PE1PT	Premium Time		NA	$79.41/$46.01
AEH	Additional Engineering Fee **(Note 5)**	Per request, first half hr/add'l half hr.		First/Add'l Basic Time $31.00/$22.00 Overtime $37.00/$26.00

EXHIBIT A: BELLSOUTH/ACCESS Integrated RATES – KENTUCKY PHYSICAL COLLOCATION (continued)

Note(s):

N/A refers to rate elements which do not have a negotiated rate.

(1) **Subsequent Application Fee**: BellSouth requires the submission of an Application Fee for modifications to an existing arrangement. However, when the modifications do not require BellSouth to expend capital, BellSouth will assess the Subsequent Application Fee in lieu of the Application Fee. Proposed modifications that could result in assessment of a Subsequent Application Fee would cause BellSouth to analyze the following but are not limited to: floor loading changes, changes to HVAC requirements, power requirement changes which may result in a power plant upgrade, environmental or safety requirements, or equipment relocation. Should the Subsequent Application Fee not be included as part of this Attachment, ACCESS Integrated will be assessed the full Application Fee for all subsequent activity for completed arrangements.

(2) **Space Preparation Fee:** The Space Preparation Fee is a one-time fee, assessed per arrangement, per location. It recovers the costs associated with the shared physical collocation area within a Premises, which include survey, engineering, design and modification costs for network, building and support systems. In the event ACCESS Integrated opts for non-enclosed space, the space preparation fee will be assessed based on the total floor space dedicated to ACCESS Integrated as prescribed in Section 7 of the Collocation Attachment.

(3) **Space Enclosure Fee**: The Space Enclosure Construction Fee is a one-time fee, assessed per enclosure, per location with a one-hundred (100) square foot minimum enclosure. It recovers costs associated with providing an optional equipment arrangement enclosure, which include architectural and engineering fees, materials, and installation costs. The cost for additional square feet is applicable only when ordered with the first 100 square feet and must be requested in fifty (50) square foot increments. ACCESS Integrated may, at its option, arrange with a BellSouth Certified Contractor to construct the space enclosure in accordance with BellSouth's guidelines and specifications. In this event, the BellSouth Certified Contractor shall directly bill ACCESS Integrated for the space enclosure, and this fee shall not be applicable.

(4) **Co-Carrier Cross-Connect.** As stated in Section 5 of the Collocation Attachment, ACCESS Integrated may connect to other CLECs within the designated Premises in addition to, and not in lieu of, interconnection to BellSouth services and facilities. Where BellSouth must construct a cable rack structure to house the co-Carrier cross-connection, construction charges will be applied on an individual case basis as described in Section 5.6.1 of the Collocation Attachment. BellSouth shall provide an estimate of these charges in the Application Response. Where an existing cable rack structure is in place and has sufficient capacity to accommodate the co-Carrier cross-connection requested, the recurring charges as stated in this Exhibit A shall apply.

EXHIBIT A: BELLSOUTH/ACCESS Integrated RATES – KENTUCKY PHYSICAL COLLOCATION (continued)

(5) **Additional Engineering Fee**: BellSouth's additional engineering, and other labor costs associated with handling ACCESS Integrated-requested modifications to requests in progress or augmentations to existing arrangements shall be recovered as Additional Engineering charges, under provisions in BellSouth's F.C.C. Number 1 Tariff, Sections 13.1 and 13.2. Should Additional Engineering rates not be included, ACCESS Integrated agrees not to make changes to collocation arrangement after a Bona Fide Firm Order is submitted.

EXHIBIT A: BELLSOUTH/ACCESS Integrated RATES – LOUISIANA PHYSICAL COLLOCATION

Rates marked with an asterisk (*) are interim and are subject to true-up.

USOC	Rate Element Description	Unit	Recurring Rate (RC)	Non-Recurring Rate (NRC)
PE1BA	Application Fee	Per request	NA	$4,910.00
PE1CA	Subsequent Application Fee **(Note 1)**	Per request	NA	$1,600.00 Minimum
PE1BB	Space Preparation Fee **(Note 2)**			
	Mechanical / HVAC*	Per ton (one ton minimum)		$2,400.00
PE1SB	Ground Bar*	Per connection		$720.00
PE1SC	Project Management*	Per arrangement		$1,675.00
PE1SD	Cable Racking / Fiber Duct	Per arrangement, sq. ft.		ICB
PE1SE	Frame / Aisle Lighting	Per arrangement, sq. ft.		ICB
PE1S	Framework Ground Conductors	Per arrangement		ICB
PE1SH	Extraordinary Modifications	Per arrangement		ICB
	Space Enclosure **(Note 3)**			
PE1BW	Welded Wire-mesh	Per first 100 sq. ft.	$197.55	NA
PE1CW	Welded Wire-mesh	Per add'l 50 sq. ft.	$20.07	NA
PE1PJ	Floor Space	Per sq. ft.	$4.01	NA
PE1BD	Cable Installation	Per cable	NA	$1,706.00 Disconnect charge $36.00
PE1PM	Cable Support Structure	Per entrance cable	$24.05	NA
	Power			
PE1PL	-48V DC Power	Per amp	$7.15	ICB
PE1FB	120V AC Power single phase*	Per breaker amp	$5.50	ICB
PE1FD	240V AC Power single phase*	Per breaker amp	$11.00	ICB
PE1FE	120V AC Power three phase*	Per breaker amp	$16.50	ICB
PE1FG	277 AC Power three phase*	Per breaker amp	$38.20	ICB
	Cross Connects **(Note 4)**	Per cross connect		First/Add'l
PE1P2	2-wire		$0.26	$23.04/$22.11
PE1P4	4-wire		$0.52	$23.23/$22.24
PE1P1	DS-1		$2.03	$43.61/$30.60
PE1P3	DS-3		$36.27	$41.46/$29.20

LOUISIANA (continued)				
USOC	**Rate Element Description**	**Unit**	**Recurring Rate (RC)**	**Non-Recurring Rate (NRC)**
	Cross Connects (continued)	Per cross connect		First/Add'l
PE1F2	2-fiber		$19.13	$41.07/$29.63
PE1F4	4-fiber		$34.38	$49.81/$38.37
				Disconnect Charges
				First/Add'l
	2-wire			$9.48/$8.54
	4-wire			$9.53/$8.55
	DS-1			$9.56/$8.63
	DS-3			$11.06/$8.86
	2-fiber			$12.84/$10.29
	4-fiber			$16.75/$14.20
	Co-Carrier Cross-Connect **(Note 5)**			
PE1ES Fiber	Fiber Cable Support Structure, existing	Per linear ft.	$0.06	NA
PE1DS Copper	Copper or Coaxial Cable Support Structure, existing	Per linear ft.	$0.03	NA
(TBD)	Cable Support Structure Construction, new	Per new construction	NA	ICB
PE1AX	Security Access System Security System*	Per premises	$52.00	
	New Access Card Activation*	Per card		$55.00
PE1AA	Administrative change, existing card*	Per card		$35.00
PE1AR	Replace lost or stolen card	Per card		$250.00
PE1SR	Space Availability Report*	Per premises requested		$550.00
	POT Bay Arrangements *Prior to 6/1/99*	Per cross-connect		
PE1PE	2-Wire Cross-Connect		$0.0776	NA
PE1PF	4-Wire Cross-Connect		$0.1552	NA
PE1PG	DS1 Cross-Connect		$0.6406	NA
PE1PH	DS3 Cross-Connect		$4.75	NA
PE1B2	2 Fiber Cross-Connect		$47.44	NA
PE1B4	4 Fiber Cross-Connect		$63.97	NA

LOUISIANA (continued)				
USOC	**Rate Element Description**	**Unit**	**Recurring Rate (RC)**	**Non-Recurring Rate (NRC)**
	Security Escort	Per half hr./Add'l half hr.		
PE1BT	Basic Time		NA	$32.35/$19.95
PE1OT	Overtime		NA	$40.50/$25.00
PE1PT	Premium Time		NA	$48.66/$30.05
AEH	Additional Engineering Fee **(Note 6)**	Per request, first half hr/add'l half hr.		First/Add'l Basic Time $31.00/$22.00 Overtime $37.00/$26.00

Note(s):

N/A refers to rate elements which do not have a negotiated rate.

(1) **Subsequent Application Fee**: BellSouth requires the submission of an Application Fee for modifications to an existing arrangement. However, when the modifications do not require BellSouth to expend capital, BellSouth will assess the Subsequent Application Fee in lieu of the Application Fee. Proposed modifications that could result in assessment of a Subsequent Application Fee would cause BellSouth to analyze the following but are not limited to: floor loading changes, changes to HVAC requirements, power requirement changes which may result in a power plant upgrade, environmental or safety requirements, or equipment relocation. Should the Subsequent Application Fee not be included as part of this Attachment, ACCESS Integrated will be assessed the full Application Fee for all subsequent activity for completed arrangements.

(2) **Space Preparation Fee**: The Space Preparation Fee is a one-time fee, assessed per arrangement, per location. It recovers the costs associated with the shared physical collocation area within a Premises, which include survey, engineering, design and modification costs for network, building and support systems. In the event ACCESS Integrated opts for non-enclosed space, the space preparation fee will be assessed based on the total floor space dedicated to ACCESS Integrated as prescribed in Section 7 of the Collocation Attachment.

(3) **Space Enclosure Fee**: The Space Enclosure Construction Fee is a monthly recurring fee, assessed per enclosure, per location with a one-hundred (100) square foot minimum enclosure. It recovers costs associated with providing an optional equipment arrangement enclosure, which include architectural and engineering fees, materials, and installation costs. The cost for additional square feet is applicable only when ordered with the first 100 square feet and must be requested in fifty (50) square foot increments. ACCESS Integrated may, at its option, arrange with a BellSouth Certified Contractor to construct the space enclosure in accordance with BellSouth's guidelines and specifications. In this event, the BellSouth Certified Contractor shall directly bill ACCESS Integrated for the space enclosure, and this fee shall not be applicable.

EXHIBIT A: BELLSOUTH/ACCESS Integrated RATES – LOUISIANA
PHYSICAL COLLOCATION (continued)

(4) **Cross Connects**: The charges for cross connects are for orders placed electronically. Cross connect elements may also be ordered manually for which there is an additional charge per element.

		Disconnect Charges
	First / Additional	First / Additional
2-wire	$24.92/$23.99	$10.56/$9.62
4-wire	$25.11/$24.12	$10.61/$9.63
DS-1	$45.49/$32.48	$10.64/$9.71
DS-3	$43.34/$31.08	$12.14/$9.94

(5) **Co-Carrier Cross-Connect.** As stated in Section 5 of the Collocation Attachment, ACCESS Integrated may connect to other CLECs within the designated Premises in addition to, and not in lieu of, interconnection to BellSouth services and facilities. Where BellSouth must construct a cable rack structure to house the co-Carrier cross-connection, construction charges will be applied on an individual case basis as described in Section 5.6.1 of the Collocation Attachment. BellSouth shall provide an estimate of these charges in the Application Response. Where an existing cable rack structure is in place and has sufficient capacity to accommodate the co-Carrier cross-connection requested, the recurring charges as stated in this Exhibit A shall apply.

(6) **Additional Engineering Fee**: BellSouth's additional engineering, and other labor costs associated with handling ACCESS Integrated-requested modifications to requests in progress or augmentations to existing arrangements shall be recovered as Additional Engineering charges, under provisions in BellSouth's F.C.C. Number 1 Tariff, Sections 13.1 and 13.2. Should Additional Engineering rates not be included, ACCESS Integrated agrees not to make changes to collocation arrangement after a Bona Fide Firm Order is submitted.

EXHIBIT A: BELLSOUTH/ACCESS Integrated RATES – MISSISSIPPI PHYSICAL COLLOCATION

Rates marked with an asterisk (*) are interim and are subject to true-up.

USOC	Rate Element Description	Unit	Recurring Rate (RC)	Non-Recurring Rate (NRC)
PE1BA	Application Fee	Per request	NA	$6,993.00 Disconnect Charge $1.70
PE1CA	Subsequent Application Fee **(Note 1)**	Per request	NA	$1,600.00 Minimum
PE1BB	Space Preparation Fee **(Note 2)**			
	Mechanical / HVAC*	Per ton (one ton minimum)		$2,400.00
PE1SB	Ground Bar*	Per connection		$720.00
PE1SC	Project Management*	Per arrangement		$1,675.00
PE1SD	Cable Racking / Fiber Duct	Per arrangement, sq. ft.		ICB
PE1SE	Frame / Aisle Lighting	Per arrangement, sq. ft.		ICB
PE1S	Framework Ground Conductors	Per arrangement		ICB
PE1SH	Extraordinary Modifications	Per arrangement		ICB
	Space Enclosure **(Note 3)**			
PE1BW	Welded Wire-mesh	Per first 100 sq. ft.	$205.08	NA
PE1CW	Welded Wire-mesh	Per add'l 50 sq. ft.	$20.83	NA
PE1PJ	Floor Space	Per sq. ft.	$3.45	
PE1BD	Cable Installation	Per cable	NA	$2,419.00 Disconnection charge $53.24
PE1PM	Cable Support Structure	Per entrance cable	$22.90	NA
	Power			
PE1PL	-48V DC Power	Per amp	$6.93	ICB
PE1FB	120V AC Power single phase*	Per breaker amp	$5.50	ICB
PE1FD	240V AC Power single phase*	Per breaker amp	$11.00	ICB
PE1FE	120V AC Power three phase*	Per breaker amp	$16.50	ICB
PE1FG	277 AC Power three phase*	Per breaker amp	$38.20	ICB
	Cross Connects **(Note 4)**	Per cross connect		First/Add'l
PE1P2	2-wire		$.3996	$30.93/$29.59
PE1P4	4-wire		$.7992	$31.17/$29.77

MISSISSIPPI (continued)				
USOC	**Rate Element Description**	**Unit**	**Recurring Rate (RC)**	**Non-Recurring Rate (NRC)**
	Cross Connects (continued)	Per cross connect		First/Add'l
PE1P1	DS-1		$2.90	$60.42/$41.68
PE1P3	DS-3		$53.31	$57.45/$39.81
PE1F2	2-fiber		$15.64	$41.56/$29.82
PE1F4	4-fiber		$28.11	$50.53/$38.78
				Disconnect Charges
				First/Add'l
	2-wire			$12.76/$11.43
	4-wire			$12.83/$11.43
	DS-1			$12.87/$11.54
	DS-3			$14.92/$11.80
	2-fiber			$12.96/$10.34
	4-fiber			$16.97/$14.35
	Co-Carrier Cross-Connect **(Note 5)**			
PE1ES Fiber	Fiber Cable Support Structure, existing	Per linear ft.	$0.06	NA
PE1DS Copper	Copper or Coaxial Cable Support Structure, existing	Per linear ft.	$0.03	NA
(TBD)	Cable Support Structure Construction, new	Per new construction	NA	ICB
PE1AX	Security Access System Security System*	Per premises	$52.00	
	New Access Card Activation*	Per card		$55.00
PE1AA	Administrative change, existing card*	Per card		$35.00
PE1AR	Replace lost or stolen card	Per card		$250.00
PE1SR	Space Availability Report*	Per premises requested		$550.00
	POT Bay Arrangements	Per cross-connect		
	Prior to 6/1/99			
PE1PE	2-Wire Cross-Connect		$0.1195	NA
PE1PF	4-Wire Cross-Connect		$0.2389	NA
PE1PG	DS1 Cross-Connect		$0.9862	NA
PE1PH	DS3 Cross-Connect		$5.81	NA
PE1B2	2 Fiber Cross-Connect		$38.79	NA
PE1B4	4 Fiber Cross-Connect		$52.31	NA

MISSISSIPPI (continued)				
USOC	**Rate Element Description**	**Unit**	**Recurring Rate (RC)**	**Non-Recurring Rate (NRC)**
	Security Escort	Per half hr./Add'l half hr.		
PE1BT	Basic Time		NA	$42.87/$25.54
PE1OT	Overtime		NA	$54.43/$32.41
PE1PT	Premium Time		NA	$65.99/$39.28
AEH	Additional Engineering Fee **(Note 6)**	Per request, first half hr/add'l half hr.		First/Add'l Basic Time $31.00/$22.00 Overtime $37.00/$26.00

Note(s):

N/A refers to rate elements which do not have a negotiated rate.

(1) **Subsequent Application Fee**: BellSouth requires the submission of an Application Fee for modifications to an existing arrangement. However, when the modifications do not require BellSouth to expend capital, BellSouth will assess the Subsequent Application Fee in lieu of the Application Fee. Proposed modifications that could result in assessment of a Subsequent Application Fee would cause BellSouth to analyze the following but are not limited to: floor loading changes, changes to HVAC requirements, power requirement changes which may result in a power plant upgrade, environmental or safety requirements, or equipment relocation. Should the Subsequent Application Fee not be included as part of this Attachment, ACCESS Integrated will be assessed the full Application Fee for all subsequent activity for completed arrangements.

(2) **Space Preparation Fee**: The Space Preparation Fee is a one-time fee, assessed per arrangement, per location. It recovers the costs associated with the shared physical collocation area within a Premises, which include survey, engineering, design and modification costs for network, building and support systems. In the event ACCESS Integrated opts for non-enclosed space, the space preparation fee will be assessed based on the total floor space dedicated to ACCESS Integrated as prescribed in Section 7 of the Collocation Attachment.

(3) **Space Enclosure Fee**: The Space Enclosure Construction Fee is a monthly recurring fee, assessed per enclosure, per location with a one-hundred (100) square foot minimum enclosure. It recovers costs associated with providing an optional equipment arrangement enclosure, which include architectural and engineering fees, materials, and installation costs. The cost for additional square feet is applicable only when ordered with the first 100 square feet and must be requested in fifty (50) square foot increments. ACCESS Integrated may, at its option, arrange with a BellSouth Certified Contractor to construct the space enclosure in accordance with BellSouth's guidelines and specifications. In this event, the BellSouth Certified Contractor shall directly bill ACCESS Integrated for the space enclosure, and this fee shall not be applicable.

EXHIBIT A: BELLSOUTH/ACCESS Integrated RATES – MISSISSIPPI
PHYSICAL COLLOCATION (continued)

(4) **Cross Connects**: The charges for cross connects are for orders placed electronically. Cross connect elements may also be ordered manually for which there is an additional charge per element.

		Disconnect Charges
	First / Additional	First / Additional
2-wire	$33.58 / $32.24	$14.27 / $12.94
4-wire	$33.82 / $32.42	$14.34 / $12.94
DS-1	$63.07 / $44.33	$14.38 / $13.05
DS-3	$60.10 / $42.46	$16.43 / $13.31

(5) **Co-Carrier Cross-Connect**. As stated in Section 5 of the Collocation Attachment, ACCESS Integrated may connect to other CLECs within the designated Premises in addition to, and not in lieu of, interconnection to BellSouth services and facilities. Where BellSouth must construct a cable rack structure to house the co-Carrier cross-connection, construction charges will be applied on an individual case basis as described in Section 5.6.1 of the Collocation Attachment. BellSouth shall provide an estimate of these charges in the Application Response. Where an existing cable rack structure is in place and has sufficient capacity to accommodate the co-Carrier cross-connection requested, the recurring charges as stated in this Exhibit A shall apply.

(6) **Additional Engineering Fee**: BellSouth's additional engineering, and other labor costs associated with handling ACCESS Integrated-requested modifications to requests in progress or augmentations for existing arrangements shall be recovered as Additional Engineering charges, under provisions in BellSouth's F.C.C. Number 1 Tariff, Sections 13.1 and 13.2. Should Additional Engineering rates not be included, ACCESS Integrated agrees not to make changes to collocation arrangement after a Bona Fide Firm Order is submitted.

EXHIBIT A: BELLSOUTH/ACCESS Integrated RATES – NORTH CAROLINA PHYSICAL COLLOCATION

***Rates are interim and subject to true-up.**

USOC	Rate Element Description	Unit	Recurring Rate (RC)	Non-Recurring Rate (NRC)
PE1BA	Application Fee	Per request	NA	$3,850.00
PE1CA	Subsequent Application Fee **(Note 1)**	Per request	NA	$1,600.00 Minimum
PE1BB	Space Preparation Fee **(Note 2)**			
	Mechanical / HVAC*	Per ton (one ton minimum)		$2,400.00
PE1SB	Ground Bar*	Per connection		$720.00
PE1SC	Project Management*	Per arrangement		$1,675.00
PE1SD	Cable Racking / Fiber Duct	Per arrangement, sq. ft.		ICB
PE1SE	Frame / Aisle Lighting	Per arrangement, sq. ft.		ICB
PE1S	Framework Ground Conductors	Per arrangement		ICB
PE1SH	Extraordinary Modifications	Per arrangement		ICB
	Space Enclosure **(Note 3)**			
PE1BW	Welded Wire-mesh	Per first 100 sq. ft.	$146.80	NA
PE1CW	Welded Wire-mesh	Per add'l 50 sq. ft.	$14.91	NA
PE1PJ	Floor Space	Per sq. ft.	$7.50	NA
PE1BD	Cable Installation	Per cable	NA	$2,750.00
PE1PM	Cable Support Structure	Per entrance cable	$13.35	NA
	Power			
PE1PL	-48V DC Power	Per amp	$5.00	ICB
PE1FB	120V AC Power single phase*	Per breaker amp	$5.50	ICB
PE1FD	240V AC Power single phase*	Per breaker amp	$11.00	ICB
PE1FE	120V AC Power three phase*	Per breaker amp	$16.50	ICB
PE1FG	277 AC Power three phase*	Per breaker amp	$38.20	ICB
	Cross Connects	Per cross connect		First/Add'l
PE1P2	2-wire		$0.30	$19.20/$19.20
PE1P4	4-wire		$0.50	$19.20/$19.20
PE1P1	DS-1		$8.00	$155.00/$27.00
PE1P3	DS-3		$72.00	$155.00/$27.00
PE1F2	2-fiber		$15.99	$67.34/$48.55
PE1F4	4-fiber		$28.74	$82.35/$63.56

NORTH CAROLINA (continued)				
USOC	**Rate Element Description**	**Unit**	**Recurring Rate (RC)**	**Non-Recurring Rate (NRC)**
	Co-Carrier Cross-Connect **(Note 4)**			
PE1ES Fiber	Fiber Cable Support Structure, existing	Per linear ft.	$0.06	NA
PE1DS Copper	Copper or Coaxial Cable Support Structure, existing	Per linear ft.	$0.03	NA
(TBD)	Cable Support Structure Construction, new	Per new construction	NA	ICB
PE1AX	Security Access System Security System*	Per premises	$52.00	
	New Access Card Activation*	Per card		$55.00
PE1AA	Administrative change, existing card*	Per card		$35.00
PE1AR	Replace lost or stolen card	Per card		$250.00
PE1SR	Space Availability Report*	Per premises requested		$550.00
	POT Bay Arrangements *Prior to 6/1/99*	Per cross-connect		
PE1PE	2-Wire Cross-Connect		$0.40	NA
PE1PF	4-Wire Cross-Connect		$1.20	NA
PE1PG	DS1 Cross-Connect		$1.20	NA
PE1PH	DS3 Cross-Connect		$8.00	NA
PE1B2	2 Fiber Cross-Connect		$39.67	NA
PE1B4	4 Fiber Cross-Connect		$53.49	NA
	Security Escort	Per half hr./Add'l half hr.		
PE1BT	Basic Time		NA	$41.00/$25.00
PE1OT	Overtime		NA	$48.00/$30.00
PE1PT	Premium Time		NA	$55.00/$35.00
AEH	Additional Engineering Fee **(Note 5)**	Per request, first half hr/add'l half hr.		First/Add'l Basic Time $31.00/$22.00 Overtime $37.00/$26.00

EXHIBIT A: BELLSOUTH/ACCESS Integrated RATES – NORTH CAROLINA PHYSICAL COLLOCATION (continued)

Note(s):
N/A refers to rate elements which do not have a negotiated rate.

(1) **Subsequent Application Fee**: BellSouth requires the submission of an Application Fee for modifications to an existing arrangement. However, when the modifications do not require BellSouth to expend capital, BellSouth will assess the Subsequent Application Fee in lieu of the Application Fee. Proposed modifications that could result in assessment of a Subsequent Application Fee would cause BellSouth to analyze the following but are not limited to: floor loading changes, changes to HVAC requirements, power requirement changes which may result in a power plant upgrade, environmental or safety requirements, or equipment relocation. Should the Subsequent Application Fee not be included as part of this Attachment, ACCESS Integrated will be assessed the full Application Fee for all subsequent activity for completed arrangements.

(2) **Space Preparation Fee**: The Space Preparation Fee is a one-time fee, assessed per arrangement, per location. It recovers the costs associated with the shared physical collocation area within a Premises, which include survey, engineering, design and modification costs for network, building and support systems. In the event ACCESS Integrated opts for non-enclosed space, the space preparation fee will be assessed based on the total floor space dedicated to ACCESS Integrated as prescribed in Section 7 of the Collocation Attachment.

(3) **Space Enclosure Fee**: The Space Enclosure Construction Fee is a monthly recurring fee, assessed per enclosure, per location with a one-hundred (100) square foot minimum enclosure. It recovers costs associated with providing an optional equipment arrangement enclosure, which include architectural and engineering fees, materials, and installation costs. The cost for additional square feet is applicable only when ordered with the first 100 square feet and must be requested in fifty (50) square foot increments. ACCESS Integrated may, at its option, arrange with a BellSouth Certified Contractor to construct the space enclosure in accordance with BellSouth's guidelines and specifications. In this event, the BellSouth Certified Contractor shall directly bill ACCESS Integrated for the space enclosure, and this fee shall not be applicable.

(4) **Co-Carrier Cross-Connect**. As stated in Section 5 of the Collocation Attachment, ACCESS Integrated may connect to other CLECs within the designated Premises in addition to, and not in lieu of, interconnection to BellSouth services and facilities. Where BellSouth must construct a cable rack structure to house the co-Carrier cross-connection, construction charges will be applied on an individual case basis as described in Section 5.6.1 of the Collocation Attachment. BellSouth shall provide an estimate of these charges in the Application Response. Where an existing cable rack structure is in place and has sufficient capacity to accommodate the co-Carrier cross-connection requested, the recurring charges as stated in this Exhibit A shall apply.

EXHIBIT A: BELLSOUTH/ACCESS Integrated RATES – NORTH CAROLINA PHYSICAL COLLOCATION (continued)

(5) **Additional Engineering Fee**: BellSouth's additional engineering, and other labor costs associated with handling ACCESS Integrated-requested modifications to requests in progress or augmentations for existing arrangements shall be recovered as Additional Engineering charges, under provisions in BellSouth's F.C.C. Number 1 Tariff, Sections 13.1 and 13.2. Should Additional Engineering rates not be included, ACCESS Integrated agrees not to make changes to collocation arrangement after a Bona Fide Firm Order is submitted.

EXHIBIT A: BELLSOUTH/ACCESS Integrated RATES – SOUTH CAROLINA PHYSICAL COLLOCATION

Rates marked with an asterisk (*) are interim and are subject to true-up.

USOC	Rate Element Description	Unit	Recurring Rate (RC)	Non-Recurring Rate (NRC)
PE1BA	Application Fee	Per request	NA	$4,850.00
PE1CA	Subsequent Application Fee **(Note 1)**	Per request	NA	$1,600.00 Minimum
PE1BB	Space Preparation Fee **(Note 2)**			
	Mechanical / HVAC*	Per ton (one ton minimum)		$2,400.00
PE1SB	Ground Bar*	Per connection		$720.00
PE1SC	Project Management*	Per arrangement		$1,675.00
PE1SD	Cable Racking / Fiber Duct	Per arrangement, sq. ft.		ICB
PE1SE	Frame / Aisle Lighting	Per arrangement, sq. ft.		ICB
PE1S	Framework Ground Conductors	Per arrangement		ICB
PE1SH	Extraordinary Modifications	Per arrangement		ICB
	Space Enclosure **(Note 3)**			
PE1BW	Welded Wire-mesh	Per first 100 sq. ft.	$224.60	NA
PE1CW	Welded Wire-mesh	Per add'l 50 sq. ft.	$22.81	NA
PE1PJ	Floor Space	Per sq. ft.	$3.90	NA
PE1BD	Cable Installation	Per cable	NA	$2,217.00
PE1PM	Cable Support Structure	Per entrance cable	$24.55	NA
	Power			
PE1PL	-48V DC Power	Per amp	$7.09	ICB
PE1FB	120V AC Power single phase*	Per breaker amp	$5.50	ICB
PE1FD	240V AC Power single phase*	Per breaker amp	$11.00	ICB
PE1FE	120V AC Power three phase*	Per breaker amp	$16.50	ICB
PE1FG	277 AC Power three phase*	Per breaker amp	$38.20	ICB
	Cross Connects **(Note 4)**	Per cross connect		First/Add'l
PE1P2	2-wire		$.3648	$41.50/$38.94
PE1P4	4-wire		$.7297	$41.56/$38.90
PE1P1	DS-1		$2.70	$70.79/$50.78
PE1P3	DS-3		$49.24	$69.60/$49.14
PE1F2	2-fiber		$15.06	$69.28/$48.89
PE1F4	4-fiber		$27.08	$84.07/$63.68

SOUTH CAROLINA (continued)				
USOC	**Rate Element Description**	**Unit**	**Recurring Rate (RC)**	**Non-Recurring Rate (NRC)**
	Co-Carrier Cross-Connect **(Note 5)**			
PE1ES Fiber	Fiber Cable Support Structure, existing	Per linear ft.	$0.06	NA
PE1DS Copper	Copper or Coaxial Cable Support Structure, existing	Per linear ft.	$0.03	NA
(TBD)	Cable Support Structure Construction, new	Per new construction	NA	ICB
PE1AX	Security Access System Security System*	Per premises	$52.00	
	New Access Card Activation*	Per card		$55.00
PE1AA	Administrative change, existing card*	Per card		$35.00
PE1AR	Replace lost or stolen card	Per card		$250.00
PE1SR	Space Availability Report*	Per premises requested		$550.00
	POT Bay Arrangements *Prior to 6/1/99*	Per cross-connect		
PE1PE	2-Wire Cross-Connect		$0.1091	NA
PE1PF	4-Wire Cross-Connect		$0.2181	NA
PE1PG	DS1 Cross-Connect		$0.9004	NA
PE1PH	DS3 Cross-Connect		$5.64	NA
PE1B2	2 Fiber Cross-Connect		$37.36	NA
PE1B4	4 Fiber Cross-Connect		$50.38	NA
	Security Escort	Per half hr./Add'l half hr.		
PE1BT	Basic Time		NA	$43.00/$25.57
PE1OT	Overtime		NA	$54.62/$32.46
PE1PT	Premium Time		NA	$66.24/$39.35
AEH	Additional Engineering Fee **(Note 6)**	Per request, first half hr/add'l half hr.		First/Add'l Basic Time $31.00/$22.00 Overtime $37.00/$26.00

EXHIBIT A: BELLSOUTH/ACCESS Integrated RATES – SOUTH CAROLINA PHYSICAL COLLOCATION (continued)

Note(s):
N/A refers to rate elements which do not have a negotiated rate.

(1) **Subsequent Application Fee**: BellSouth requires the submission of an Application Fee for modifications to an existing arrangement. However, when the modifications do not require BellSouth to expend capital, BellSouth will assess the Subsequent Application Fee in lieu of the Application Fee. Proposed modifications that could result in assessment of a Subsequent Application Fee would cause BellSouth to analyze the following but are not limited to: floor loading changes, changes to HVAC requirements, power requirement changes which may result in a power plant upgrade, environmental or safety requirements, or equipment relocation. Should the Subsequent Application Fee not be included as part of this Attachment, ACCESS Integrated will be assessed the full Application Fee for all subsequent activity for completed arrangements.

(2) **Space Preparation Fee:** The Space Preparation Fee is a one-time fee, assessed per arrangement, per location. It recovers the costs associated with the shared physical collocation area within a Premises, which include survey, engineering, design and modification costs for network, building and support systems. In the event ACCESS Integrated opts for non-enclosed space, the space preparation fee will be assessed based on the total floor space dedicated to ACCESS Integrated as prescribed in Section 7 of the Collocation Attachment.

(3) **Space Enclosure Fee**: The Space Enclosure Construction Fee is a monthly recurring fee, assessed per enclosure, per location with a one-hundred (100) square foot minimum enclosure. It recovers costs associated with providing an optional equipment arrangement enclosure, which include architectural and engineering fees, materials, and installation costs. The cost for additional square feet is applicable only when ordered with the first 100 square feet and must be requested in fifty (50) square foot increments. ACCESS Integrated may, at its option, arrange with a BellSouth Certified Contractor to construct the space enclosure in accordance with BellSouth's guidelines and specifications. In this event, the BellSouth Certified Contractor shall directly bill ACCESS Integrated for the space enclosure, and this fee shall not be applicable.

(4) **Cross Connects**: The charges for cross connects are for orders placed electronically. Cross connect elements may also be ordered manually for which there is an additional charge per element.

	First / Additional
2-wire	$46.66 / $44.10
4-wire	$46.68 / $44.02
DS-1	$75.88 / $55.87
DS-3	$74.69 / $54.23

EXHIBIT A: BELLSOUTH/ACCESS Integrated RATES – SOUTH CAROLINA PHYSICAL COLLOCATION (continued)

(5) **Co-Carrier Cross-Connect**. As stated in Section 5 of the Collocation Attachment, ACCESS Integrated may connect to other CLECs within the designated Premises in addition to, and not in lieu of, interconnection to BellSouth services and facilities. Where BellSouth must construct a cable rack structure to house the co-Carrier cross-connection, construction charges will be applied on an individual case basis as described in Section 5.6.1 of the Collocation Attachment. BellSouth shall provide an estimate of these charges in the Application Response. Where an existing cable rack structure is in place and has sufficient capacity to accommodate the co-Carrier cross-connection requested, the recurring charges as stated in this Exhibit A shall apply.

(6) **Additional Engineering Fee**: BellSouth's additional engineering, and other labor costs associated with handling ACCESS Integrated-requested modifications to requests in progress or augmentations to existing arrangements shall be recovered as Additional Engineering charges, under provisions in BellSouth's F.C.C. Number 1 Tariff, Sections 13.1 and 13.2. Should Additional Engineering rates not be included, ACCESS Integrated agrees not to make changes to collocation arrangement after a Bona Fide Firm Order is submitted.

EXHIBIT A: BELLSOUTH/ACCESS Integrated RATES – TENNESSEE
PHYSICAL COLLOCATION

*** Rates are interim and are subject to true-up.**

USOC	Rate Element Description	Unit	Recurring Rate (RC)	Non-Recurring Rate (NRC)
PE1BA	Application Fee	Per request	NA	$3,850.00
PE1CA	Subsequent Application Fee **(Note 1)**	Per request	NA	$1,600.00 Minimum
PE1BB	Space Preparation Fee **(Note 2)**			
	Mechanical / HVAC*	Per ton (one ton minimum)		$2,400.00
PE1SB	Ground Bar*	Per connection		$720.00
PE1SC	Project Management*	Per arrangement		$1,675.00
PE1SD	Cable Racking / Fiber Duct	Per arrangement, sq. ft.		ICB
PE1SE	Frame / Aisle Lighting	Per arrangement, sq. ft.		ICB
PE1S	Framework Ground Conductors	Per arrangement		ICB
PE1SH	Extraordinary Modifications	Per arrangement		ICB
	Space Enclosure **(Note 3)**			
PE1BW	Welded Wire-mesh	Per first 100 sq. ft.	$190.79	NA
PE1CW	Welded Wire-mesh	Per add'l 50 sq. ft.	$19.38	NA
PE1PJ	Floor Space	Per sq. ft.	$7.50	NA
PE1BD	Cable Installation	Per cable	NA	$2,750.00
PE1PM	Cable Support Structure	Per entrance cable	$13.35	NA
	Power			
PE1PL	-48V DC Power	Per amp	$5.00	ICB
PE1FB	120V AC Power single phase*	Per breaker amp	$5.50	ICB
PE1FD	240V AC Power single phase*	Per breaker amp	$11.00	ICB
PE1FE	120V AC Power three phase*	Per breaker amp	$16.50	ICB
PE1FG	277 AC Power three phase*	Per breaker amp	$38.20	ICB
	Cross Connects	Per cross connect		First/Add'l
PE1P2	2-wire		$0.30	$19.20/$19.20
PE1P4	4-wire		$0.50	$19.20/$19.20
PE1P1	DS-1		$8.00	$155.00/$27.00
PE1P3	DS-3		$72.00	$155.00/$27.00
PE1F2	2-fiber		$15.64	$41.56/$29.82
PE1F4	4-fiber		$28.11	$50.53/$38.78

TENNESSEE (continued)				
USOC	**Rate Element Description**	**Unit**	**Recurring Rate (RC)**	**Non-Recurring Rate (NRC)**
	Co-Carrier Cross-Connect **(Note 4)**			
PE1ES Fiber	Fiber Cable Support Structure, existing	Per linear ft.	$0.06	NA
PE1DS Copper	Copper or Coaxial Cable Support Structure, existing	Per linear ft.	$0.03	NA
(TBD)	Cable Support Structure Construction, new	Per new construction	NA	ICB
PE1AX	Security Access System Security System	Per premises	$52.00	
	New Access Card Activation	Per card		$55.00
PE1AA	Administrative change, existing card	Per card		$35.00
PE1AR	Replace lost or stolen card	Per card		$250.00
PE1SR	Space Availability Report*	Per premises requested		$550.00
	POT Bay Arrangements *Prior to 6/1/99*	Per cross-connect		
PE1PE	2-Wire Cross-Connect		$0.40	NA
PE1PF	4-Wire Cross-Connect		$1.20	NA
PE1PG	DS1 Cross-Connect		$1.20	NA
PE1PH	DS3 Cross-Connect		$8.00	NA
PE1B2	2 Fiber Cross-Connect		$38.79	NA
PE1B4	4 Fiber Cross-Connect		$52.31	NA
	Security Escort	Per half hr./Add'l half hr.		
PE1BT	Basic Time		NA	$41.00/$25.00
PE1OT	Overtime		NA	$48.00/$30.00
PE1PT	Premium Time		NA	$55.00/$35.00
AEH	Additional Engineering Fee **(Note 5)**	Per request, first half hr/add'l half hr.		First/Add'l Basic Time $31.00/$22.00 Overtime $37.00/$26.00

EXHIBIT A: BELLSOUTH/ACCESS Integrated RATES – TENNESSEE
PHYSICAL COLLOCATION (continued)

Note(s):
N/A refers to rate elements which do not have a negotiated rate.

(1) **Subsequent Application Fee**: BellSouth requires the submission of an Application Fee for modifications to an existing arrangement. However, when the modifications do not require BellSouth to expend capital, BellSouth will assess the Subsequent Application Fee in lieu of the Application Fee. Proposed modifications that could result in assessment of a Subsequent Application Fee would cause BellSouth to analyze the following but are not limited to: floor loading changes, changes to HVAC requirements, power requirement changes which may result in a power plant upgrade, environmental or safety requirements, or equipment relocation. Should the Subsequent Application Fee not be included as part of this Attachment, ACCESS Integrated will be assessed the full Application Fee for all subsequent activity for completed arrangements.

(2) **Space Preparation Fee**: The Space Preparation Fee is a one-time fee, assessed per arrangement, per location. It recovers the costs associated with the shared physical collocation area within a Premises, which include survey, engineering, design and modification costs for network, building and support systems. In the event ACCESS Integrated opts for non-enclosed space, the space preparation fee will be assessed based on the total floor space dedicated to ACCESS Integrated as prescribed in Section 7 of the Collocation Attachment.

(3) **Space Enclosure Fee**: The Space Enclosure Construction Fee is a monthly recurring fee, assessed per enclosure, per location with a one-hundred (100) square foot minimum enclosure. It recovers costs associated with providing an optional equipment arrangement enclosure, which include architectural and engineering fees, materials, and installation costs. The cost for additional square feet is applicable only when ordered with the first 100 square feet and must be requested in fifty (50) square foot increments. ACCESS Integrated may, at its option, arrange with a BellSouth Certified Contractor to construct the space enclosure in accordance with BellSouth's guidelines and specifications. In this event, the BellSouth Certified Contractor shall directly bill ACCESS Integrated for the space enclosure, and this fee shall not be applicable.

(4) **Co-Carrier Cross-Connect**. As stated in Section 5 of the Collocation Attachment, ACCESS Integrated may connect to other CLECs within the designated Premises in addition to, and not in lieu of, interconnection to BellSouth services and facilities. Where BellSouth must construct a cable rack structure to house the co-Carrier cross-connection, construction charges will be applied on an individual case basis as described in Section 5.6.1 of the Collocation Attachment. BellSouth shall provide an estimate of these charges in the Application Response. Where an existing cable rack structure is in place and has sufficient capacity to accommodate the co-Carrier cross-connection requested, the recurring charges as stated in this Exhibit A shall apply.

EXHIBIT A: BELLSOUTH/ACCESS Integrated RATES – TENNESSEE
PHYSICAL COLLOCATION (continued)

(5) **Additional Engineering Fee**: BellSouth's additional engineering, and other labor costs associated with handling ACCESS Integrated-requested modifications to requests in progress or augmentations for existing arrangements shall be recovered as Additional Engineering charges, under provisions in BellSouth's F.C.C. Number 1 Tariff, Sections 13.1 and 13.2. Should Additional Engineering rates not be included, ACCESS Integrated agrees not to make changes to collocation arrangement after a Bona Fide Firm Order is submitted.

EXHIBIT B

ENVIRONMENTAL AND SAFETY PRINCIPLES

The following principles provide basic guidance on environmental and safety issues when applying for and establishing Physical Collocation arrangements.

1. GENERAL PRINCIPLES

1.1 Compliance with Applicable Law. BellSouth and ACCESS Integrated agree to comply with applicable federal, state, and local environmental and safety laws and regulations including U.S. Environmental Protection Agency (USEPA) regulations issued under the Clean Air Act (CAA), Clean Water Act (CWA), Resource Conservation and Recovery Act (RCRA), Comprehensive Environmental Response, Compensation and Liability Act (CERCLA), Superfund Amendments and Reauthorization Act (SARA), the Toxic Substances Control Act (TSCA), and OSHA regulations issued under the Occupational Safety and Health Act of 1970, as amended and NFPA and National Electrical Codes (NEC) and the NESC ("Applicable Laws"). Each Party shall notify the other if compliance inspections are conducted by regulatory agencies and/or citations are issued that relate to any aspect of this Attachment.

1.2 Notice. BellSouth and ACCESS Integrated shall provide notice to the other, including Material Safety Data Sheets (MSDSs), of known and recognized physical hazards or Hazardous Chemicals existing on site or brought on site. Each Party is required to provide specific notice for known potential Imminent Danger conditions. ACCESS Integrated should contact 1-800-743-6737 for BellSouth MSDS sheets.

1.3 Practices/Procedures. BellSouth may make available additional environmental control procedures for ACCESS Integrated to follow when working at a BellSouth Premises (See Section 2, below). These practices/procedures will represent the regular work practices required to be followed by the employees and contractors of BellSouth for environmental protection. ACCESS Integrated will require its contractors, agents and others accessing the BellSouth Premises to comply with these practices. Section 2 lists the Environmental categories where BST practices should be followed by CLEC when operating in the BellSouth Premises.

1.4 Environmental and Safety Inspections. BellSouth reserves the right to inspect the ACCESS Integrated space with proper notification. BellSouth reserves the right to stop any ACCESS Integrated work operation that imposes Imminent Danger to the environment, employees or other persons in the area or Facility.

1.5 Hazardous Materials Brought On Site. Any hazardous materials brought into, used, stored or abandoned at the BellSouth Premises by ACCESS Integrated are owned by

ACCESS Integrated. ACCESS Integrated will indemnify BellSouth for claims, lawsuits or damages to persons or property caused by these materials. Without prior written BellSouth approval, no substantial new safety or environmental hazards can be created by ACCESS Integrated or different hazardous materials used by ACCESS Integrated at BellSouth Facility. ACCESS Integrated must demonstrate adequate emergency response capabilities for its materials used or remaining at the BellSouth Facility.

1.6 Spills and Releases. When contamination is discovered at a BellSouth Premises, the Party discovering the condition must notify BellSouth. All Spills or Releases of regulated materials will immediately be reported by ACCESS Integrated to BellSouth.

1.7 Coordinated Environmental Plans and Permits. BellSouth and ACCESS Integrated will coordinate plans, permits or information required to be submitted to government agencies, such as emergency response plans, spill prevention control and countermeasures (SPCC) plans and community reporting. If fees are associated with filing, BellSouth and ACCESS Integrated will develop a cost sharing procedure. If BellSouth's permit or EPA identification number must be used, ACCESS Integrated must comply with all of BellSouth's permit conditions and environmental processes, including environmental "best management practices (BMP)" (see Section 2, below) and/or selection of BST disposition vendors and disposal sites.

1.8 Environmental and Safety Indemnification. BellSouth and ACCESS Integrated shall indemnify, defend and hold harmless the other Party from and against any claims (including, without limitation, third-party claims for personal injury or death or real or personal property damage), judgments, damages, (including direct and indirect damages, and punitive damages), penalties, fines, forfeitures, costs, liabilities, interest and losses arising in connection with the violation or alleged violation of any Applicable Law or contractual obligation or the presence or alleged presence of contamination arising out of the acts or omissions of the indemnifying Party, its agents, contractors, or employees concerning its operations at the Facility.

2. CATEGORIES FOR CONSIDERATION OF ENVIRONMENTAL ISSUES

When performing functions that fall under the following Environmental categories on BellSouth's Premises, ACCESS Integrated agrees to comply with the applicable sections of the current issue of BellSouth's Environmental and Safety Methods and Procedures (M&Ps), incorporated herein by this reference. ACCESS Integrated further agrees to cooperate with BellSouth to ensure that ACCESS Integrated's employees, agents, and/or subcontractors are knowledgeable of and satisfy those provisions of BellSouth's Environmental M&Ps which apply to the specific Environmental function being performed by ACCESS Integrated, its employees, agents and/or subcontractors.

The most current version of reference documentation must be requested from BellSouth.

ENVIRONMENTAL CATEGORIES	ENVIRONMENTAL ISSUES	ADDRESSED BY THE FOLLOWING DOCUMENTATION
Disposal of hazardous material or other regulated material (e.g., batteries, fluorescent tubes, solvents & cleaning materials)	Pollution liability insurance EVET approval of contractor	Std T&C 450 GU-BTEN-001BT, Chapter 4 Std T&C 660-3 GU-BTEN-001BT, Chapter 10
Emergency response	Hazmat/waste release/spill firesafety emergency	GU-BTEN-001BT, Chapter Building Emergency Operations Plan (EOP) (specific to Premises)
Contract labor/outsourcing for services with environmental implications to be performed on BellSouth Premises (e.g., disposition of hazardous material/waste; maintenance of storage tanks)	Performance of services in accordance with BST's environmental M&Ps Insurance	Std T&C 450 Std T&C 450-B (Contact E/S or your DEC/LDEC for copy of appropriate E/S M&Ps.) Std T&C 660
Transportation of hazardous material	Pollution liability insurance EVET approval of contractor	Std T&C 450 GU-BTEN-001BT, Chapter 4 Std T&C 660-3 GU-BTEN-001BT, Chapter 10
Maintenance/operations work which may produce a waste Other maintenance work	Protection of BST employees and equipment	Std T&C 450 GU-BTEN-001BT, Chapter 10 29CFR 1910.147 29CFR 1910 Subpart O
Janitorial services	All waste removal and disposal must conform to all applicable federal, state and local regulations All HazMat & Waste Asbestos notification protection of BST employees and equipment	P&SM Manager - Procurement GU-BTEN-001BT, Chapter 4, GU-BTEN-001BT, Chapter 3 BSP 010-170-001BS (Hazcom)
Manhole cleaning	Pollution liability insurance Manhole entry requirements EVET approval of contractor	Std T&C 450 Std T&C 660-3 BSP 620-145-011PR Issue A, August 1996 GU-BTEN-001BT, Chapter 10 RL9706008BT
Removing or disturbing building materials that may	Asbestos work practices	GU-BTEN-001BT, Chapter 3

contain asbestos		

3. DEFINITIONS

Generator. Under RCRA, the person whose act produces a Hazardous Waste, as defined in 40 CFR 261, or whose act first causes a Hazardous Waste to become subject to regulation. The Generator is legally responsible for the proper management and disposal of Hazardous Wastes in accordance with regulations.

Hazardous Chemical. As defined in the U.S. Occupational Safety and Health (OSHA) hazard communication standard (29 CFR 1910.1200), any chemical which is a health hazard or physical hazard.

Hazardous Waste. As defined in section 1004 of RCRA.

Imminent Danger. Any conditions or practices at a facility which are such that a danger exists which could reasonably be expected to cause immediate death or serious harm to people or immediate significant damage to the environment or natural resources.

Spill or Release. As defined in Section 101 of CERCLA.

4. ACRONYMS

DEC/LDEC - Department Environmental Coordinator/Local Department Environmental Coordinator

GU-BTEN-001BT - BellSouth Environmental Methods and Procedures

EVET - Environmental Vendor Evaluation Team

P&SM - Property & Services Management

Std. T&C - Standard Terms & Conditions

NESC - National Electrical Safety Codes

Attachment 5

Access to Numbers and Number Portability

TABLE OF CONTENTS

1. Non-Discriminatory Access To Telephone Numbers 3

2. Number Portability Permanent Solution 3

3. Service Provider Number Portability 4

4. SPNP Implementation 4

5. Transition To Permanent Number Portability 7

6. True-Up 7

7. Operational Support System (OSS) Rates 8

Rates……Exhibit A

ACCESS TO NUMBERS AND NUMBER PORTABILITY

1. Non-Discriminatory Access to Telephone Numbers

All the negotiated rates, terms and conditions set forth in this Attachment pertain to the provisioning of local number portability.

1.1 During the term of this Agreement, ACCESS Integrated shall contact the North American Numbering Plan Administrator, Neustar, for the assignment of numbering resources. In order to be assigned a Central Office Code, ACCESS Integrated will be required to complete the Central Office Code (NXX) Assignment Request and Confirmation Form (Code Request Form) in accordance with Industry Numbering Committee's Central Office Code (NXX) Assignment Guidelines (INC 95-0407-008).

1.2 For the purposes of the resale of BellSouth's telecommunications services by ACCESS Integrated, BellSouth will provide ACCESS Integrated with on line access to telephone numbers for reservation on a first come first served basis. Such reservations of telephone numbers, on a pre-ordering basis shall be for a period of ninety (90) days. ACCESS Integrated acknowledges that there may be instances where there is a shortage of telephone numbers in a particular CLLIC and in such instances BellSouth may request that ACCESS Integrated cancel its reservations of numbers. ACCESS Integrated shall comply with such request.

1.3. Further, upon ACCESS Integrated request and for the purposes of the resale of BellSouth's telecommunications services by ACCESS Integrated, BellSouth will reserve up to 100 telephone numbers per Common Language Location Identifier Code (CLLIC), for ACCESS Integrated's sole use. Such telephone number reservations shall be transmitted to ACCESS Integrated via electronic file transfer. Such reservations shall be valid for ninety (90) days from the reservation date. ACCESS Integrated acknowledges that there may be instances where there is a shortage of telephone numbers in a particular CLLIC and in such instances BellSouth shall use its best efforts to reserve for a ninety (90) day period a sufficient quantity for ACCESS Integrated's reasonable need in that particular CLLIC.

2. Number Portability Permanent Solution

2.1 The FCC, the Commissions, and industry forums have developed and BellSouth is implementing a permanent approach to providing service provider number portability. Both Parties will implement a permanent approach as developed and approved by the Commission, the FCC and industry forums. Consistent with the requirements to move to Permanent Number Portability (PNP) as set forth in Section 5 of this Attachment, Interim Service Provider Number Portability (SPNP) may be available only until such permanent solution is implemented in an end office.

2.2 End User Line Charge. Recovery of charges associated with implementing PNP through a monthly charge assessed to end users has been authorized by the FCC. This end user line charge will be as filed in FCC No. 1 and will be billed to ACCESS Integrated where ACCESS Integrated is a subscriber to local switching or where ACCESS Integrated is a reseller of BellSouth telecommunications services. This charge will not be discounted.

3. Service Provider Number Portability

3.1 Definition. Until the industry-wide permanent solution is implemented in an end office, BellSouth shall provide Service Provider Number Portability ("SPNP"). SPNP is an interim service arrangement whereby an end user who switches subscription of his local exchange service from BellSouth to a CLEC, or vice versa, is permitted to retain the use of his existing assigned telephone number, provided that the end user remains at the same location for his local exchange service or changes locations and service providers but stays within the same serving wire center of his existing number.

3.2 Methods of Providing Number Portability. SPNP is available through either remote call forwarding or direct inward dialing trunks, at the election of ACCESS Integrated. Remote call forwarding (SPNP-RCF) is an existing switch-based BellSouth service that redirects calls within the telephone network. Direct inward dialing trunks (SPNP-DID) allow calls to be routed over a dedicated facility to the ACCESS Integrated switch that serves the subscriber.

3.3 Signaling Requirements. SS7 Signaling is required for the provision of SPNP services. SPNP-DID is available from BellSouth on a per DS0, DS1, or DS3 basis. Where SPNP-DID is technically feasible and is provided on a DS1 or a DS3 basis, the applicable channelization rates are those specified in Section E6 in BellSouth's Intrastate Access Tariffs**,** incorporated herein by this reference. SPNP is available only for basic local exchange service.

3.4 Rates

Rates for SPNP are set out in Exhibit A to this Attachment. If no rate is identified in the Attachment, the rate for the specific service or function will be as set forth in applicable BellSouth tariff or as negotiated by the Parties upon request by either Party.

4. SPNP Implementation

4.1 SPNP is available only where a CLEC or BellSouth is currently providing, or will begin providing concurrent with provision of SPNP, basic local exchange service to the affected end user. SPNP for a particular telephone number is available only from the central office originally providing local exchange service to the end user. SPNP for a particular assigned telephone number will be disconnected when any end user,

Commission, BellSouth, or CLEC initiated activity (*e.g.*, a change in exchange boundaries) would normally result in a telephone number change had the end user retained his initial local exchange service.

4.2 SPNP-RCF, as contemplated by this Agreement, is a telecommunications service whereby a call dialed to an SPNP-RCF equipped telephone number is automatically forwarded to an assigned seven- or ten- digit telephone number within the local calling area as defined in BellSouth's General Subscriber Services Tariff. The forwarded-to number shall be specified by the CLEC or BellSouth, as appropriate. The forwarding Party will provide identification of the originating telephone number, via SS7 signaling, to the receiving Party. Identification of the originating telephone number to the SPNP-RCF end user cannot be guaranteed, however. SPNP-RCF provides a single call path for the forwarding of no more than one simultaneous call to the receiving Party's specified forwarded-to number.

4.3 SPNP-DID service, as contemplated by this Agreement, provides trunk side access to end office switches for direct inward dialing to the other Party's premises equipment from the telecommunications network to lines associated with the other Party's switching equipment and must be provided on all trunks in a group arranged for inward service. A SPNP-DID trunk termination charge, provided with SS7 Signaling only, applies for each trunk voice grade equivalent. In addition, direct facilities are required from the end office where a ported number resides to the end office serving the ported end user customer. The rates for a switched local channel and switched dedicated transport apply as contained in BellSouth's Intrastate Access Services tariff, as said tariff is amended from time to time. Transport mileage will be calculated as the airline distance between the end office where the number is ported and the Point of Interface ("POI") using the V&H coordinate method. SPNP-DID must be established with a minimum configuration of two channels and one unassigned telephone number per switch, per arrangement for control purposes. Transport facilities arranged for SPNP-DID may not be mixed with any other type of trunk group, with no outgoing calls placed over said facilities. SPNP-DID will be provided only where such facilities are available and where the switching equipment of the ordering Party is properly equipped. Where SPNP-DID service is required from more than one wire center or from separate trunk groups within the same wire center, such service provided from each wire center or each trunk group within the same wire center shall be considered a separate service. Only customer-dialed sent-paid calls will be completed to the first number of a SPNP-DID number group; however, there are no restrictions on calls completed to other numbers of a SPNP-DID number group. Sent-paid calls refer to those calls placed by an end user who physically deposits currency in a public telephone. Interface group arrangements provided for terminating the switched transport at the Party's terminal location are as set forth in of BellSouth's Intrastate Access Services Tariff, § E6.1.3.A as amended from time to time.

4.3.1 SPNP-DID Service requires ordering consecutive telephone numbers in blocks of twenty. To order non-consecutive telephone numbers or telephone numbers in less than blocks of twenty, the NBR process must be used. SS7 Signaling is required for the provision of either of these services.

4.4 The calling Party shall be responsible for payment of the applicable charges for sent-paid calls to the SPNP number. For collect, third-party, or other operator-assisted non-sent paid calls to the ported telephone number, BellSouth or the CLEC shall be responsible for the payment of charges under the same terms and conditions for which the end user would have been liable for those charges. Either Party may request that the other block collect and third party non-sent paid calls to the SPNP-assigned telephone number. If a Party does not request blocking, the other Party will provide itemized local usage detail for the billing of non-sent paid calls on the monthly bill of usage charges provided at the individual end user account level. The detail will include itemization of all billable usage. Each Party shall have the option of receiving this usage data on a daily basis via a data file transfer arrangement. This arrangement will utilize the existing industry uniform standard, known as EMR standards, for exchange of billing data. Files of usage data will be created daily for the optional service. Usage originated and recorded in the sending BellSouth RAO will be provided in unrated or rated format, depending on processing system. CLEC usage originated elsewhere and delivered via CMDS to the sending BellSouth RAO shall be provided in rated format.

4.5 Each Party shall be responsible for obtaining authorization from the end user for the handling of the disconnection of the end user's service, the provision of new local service and the provision of SPNP services. Each Party shall be responsible for coordinating the provision of service with the other to assure that its switch is capable of accepting SPNP ported traffic. Each Party shall be responsible for providing equipment and facilities that are compatible with the other's service parameters, interfaces, equipment and facilities and shall be required to provide sufficient terminating facilities and services at the terminating end of an SPNP call to adequately handle all traffic to that location and shall be solely responsible to ensure that its facilities, equipment and services do not interfere with or impair any facility, equipment, or service of the other Party or any of its end users. In the event that either Party determines in its reasonable judgment that the other Party will likely impair or is impairing, or interfering with any equipment, facility or service or any of its end users, that Party may either refuse to provide SPNP service or may terminate SPNP service to the other Party after providing appropriate notice.

4.6 Each Party shall be responsible for providing an appropriate intercept announcement service for any telephone numbers subscribed to SPNP services for which it is not presently providing local exchange service or terminating to an end user. Where either Party chooses to disconnect or terminate any SPNP service, that Party shall be responsible for designating the preferred standard type of announcement to be provided.

4.7 Each Party shall be the other Party's single point of contact for all repair calls on behalf of each Party's end user. Each Party reserves the right to contact the other Party's customers if deemed necessary for maintenance purposes.

4.8 Neither Party shall be responsible for adverse effects on any service, facility or equipment from the use of SPNP services. End-to-end transmission characteristics may vary depending on the distance and routing necessary to complete calls over SPNP facilities and the fact that another carrier is involved in the provisioning of service. Therefore, end-to-end transmission characteristics cannot be specified by either Party for such calls. Neither Party shall be responsible to the other if any necessary change in protection criteria or in any of the facilities, operation, or procedures of either renders any facilities provided by the other Party obsolete or renders necessary modification of the other Party's equipment.

4.9 For terminating IXC traffic ported to either Party which requires use of either Party's tandem switching, the tandem provider will bill the IXC tandem switching, the interconnection charge, and a portion of the transport, and the other Party will bill the IXC local switching, the carrier common line and a portion of the transport. If the tandem provider is unable to provide the necessary access records to permit the other Party to bill the IXC directly for terminating access to ported numbers, then the tandem provider will bill the IXC full terminating switched access charges at the tandem provider's rate and will compensate the other Party at the tandem Party's tariff rates via a process used by BellSouth to estimate the amount of ported switched access revenues due the other Party. If an intraLATA toll call is delivered, the delivering Party will pay terminating access rates to the other Party. This subsection does not apply in cases where SPNP-DID is utilized for number portability.

5. Transition to Permanent Number Portability

5.1 Once a PNP is implemented in an end office both Parties must withdraw their SPNP offerings. The transition from existing SPNP arrangements to PNP shall occur within one hundred twenty (120) days from the date PNP is implemented in the end office. Neither Party shall charge the other Party for conversion from SPNP to PNP. The Parties shall comply with any SPNP/PNP transition processes established by the FCC and State commissions and appropriate industry number portability work groups.

5.2 Notwithstanding the foregoing, the Parties acknowledge that the FCC has determined once LNP has been deployed pursuant to the FCC's orders, rules and regulations, that all local exchange carriers (LECs) have the duty to provide LNP. Therefore, either Party, at any time, may seek appropriate legal or regulatory relief concerning the transition from INP to LNP or other related issues.

6. True-up

This section applies only to North Carolina and Tennessee and other rates that are interim or expressly subject to true-up under this attachment.

6.1 The interim prices for Network Elements and Other Services and Local Interconnection shall be subject to true-up according to the following procedures:

The interim prices shall be trued-up, either up or down, based on final prices determined either by further agreement between the Parties, or by a final order (including any appeals) of the Commission which final order meets the criteria of (3) below. The Parties shall implement the true-up by comparing the actual volumes and demand for each item, together with interim prices for each item, with the final prices determined for each item. Each Party shall keep its own records upon which the true-up can be based, and any final payment from one Party to the other shall be in an amount agreed upon by the Parties based on such records. In the event of any disagreement as between the records or the Parties regarding the amount of such true-up, the Parties agree that the body having jurisdiction over the matter shall be called upon to resolve such differences, or the Parties may mutually agree to submit the matter to the Dispute Resolution process in accordance with the provisions in the General Terms and Conditions and Attachment 1 of this Agreement.

6.2 The Parties may continue to negotiate toward final prices, but in the event that no such agreement is reached within nine (9) months, either Party may petition the Commission to resolve such disputes and to determine final prices for each item. Alternatively, upon mutual agreement, the Parties may submit the matter to the Dispute Resolution Process set forth in the General Terms and Conditions and Attachment 1 of the Agreement incorporated herein by reference, so long as they file the resulting Agreement with the Commission as a "negotiated Agreement" under Section 252(e) of the Act.

6.3 A final order of this Commission that forms the basis of a true-up shall be the final order as to prices based on appropriate cost studies, or potentially may be a final order in any other Commission proceeding which meets the following criteria:

(a) BellSouth and CLEC is entitled to be a full Party to the proceeding;
(b) It shall apply the provisions of the federal Telecommunications Act of 1996, including but not limited to Section 252(d)(1) (which contains pricing standards) and all then-effective implementing rules and regulations; and,
(c) It shall include as an issue the geographic deaveraging of network element prices, which deaveraged prices, if any are required by said final order, shall form the basis of any true-up.

7. Operational Support System (OSS) Rates

BellSouth has developed and made available the following mechanized systems by which ACCESS Integrated may submit LSRs electronically.

LENS	Local Exchange Navigation System
EDI	Electronic Data Interchange
TAG	Telecommunications Access Gateway

LSRs submitted by means of one of these interactive interfaces will incur an OSS electronic ordering charge as specified in the table below. An individual LSR will be identified for billing purposes by its Purchase Order Number (PON). LSRs submitted by means other than one of these interactive interfaces (mail, fax, courier, etc.) will incur a manual order charge as specified in the table below:

OPERATIONAL SUPPORT SYSTEMS	**AL, GA, LA, MS, SC**	**FL, KY, NC, TN**
OSS **LSR** charge, per LSR received from the CLEC by one of the OSS interactive interfaces	$3.50 SOMEC	$3.50 SOMEC
Incremental charge per LSR received from the CLEC by means other than one of the OSS interactive interfaces	See applicable rate element	$19.99 SOMAN

Note: In addition to the OSS charges, applicable discounted service order and related discounted charges apply per the tariff.

Denial/Restoral OSS Charge

In the event ACCESS Integrated provides a list of customers to be denied and restored, rather than an LSR, each location on the list will require a separate PON and, therefore will be billed as one LSR per location.

Cancellation OSS Charge

ACCESS Integrated will incur an OSS charge for an accepted LSR that is later canceled by ACCESS Integrated.

Note: Supplements or clarifications to a previously billed LSR will not incur another OSS charge.

Network Elements and Other Services Manual Additive

The Commissions in Alabama, Georgia, Louisiana, Mississippi and South Carolina have ordered incremental manual non-recurring charges (NRC) for network elements and other services ordered by means other than one of the interactive interfaces. These ordered network elements and other services manual additive NRCs will apply in these states, rather than the charge per LSR.

Threshold Billing Plan

The Parties agree that ACCESS Integrated will incur the mechanized rate for all LSRs, both mechanized and manual, if the percentage of mechanized LSRs to total LSRs meets or exceeds the threshold percentages shown below:

Year	Ratio: Mechanized/Total LSRs
2000	80%
2001	90%

The threshold plan will be discontinued in 2002.

BellSouth will track the total LSR volume for each CLEC for each quarter. At the end of that time period, a Percent Electronic LSR calculation will be made for that quarter based on the LSR data tracked in the LCSC. If this percentage exceeds the threshold volume, all of that CLECs' future manual LSRs will be billed at the mechanized LSR rate. To allow time for obtaining and analyzing the data and updating the billing system, this billing change will take place on the first day of the second month following the end of the quarter (e.g. May 1 for 1Q, Aug 1 for 2Q, etc.). There will be no adjustments to the amount billed for previously billed LSRs.

BELLSOUTH/ACCESS INTEGRATED RATES
SERVICE PROVIDER
NUMBER PORTABILITY

		RATES BY STATE								
DESCRIPTION	**USOC**	**AL**	**FL**	**GA**	**KY**	**LA**	**MS**	**NC**	**SC**	**TN**
INTERIM SERVICE PROVIDER NUMBER PORTABILITY - RCF (1) (2)										
RCF, per number ported (Business Line), 10 paths	TNPBL	NA	NA	NA	NA	NA	NA	$2.25	NA	NA
RCF, per number ported (Residence Line), 6 paths	TNPRL	NA	NA	NA	NA	NA	NA	$1.15	NA	NA
RCF, per number ported (Business Line)	TNPBL	$2.13	NA	$2.03	NA	$2.29	$2.34	$1.66	$2.17	$1.50
NRC - Electronic	TNPBL	$0.65	NA	$0.51	NA	$0.49	$0.6441	$0.71	$0.7046	NA
NRC - Disconnect Charge	TNPBL	$0.07	NA	NA	NA	$0.05	$0.0644	$0.50	NA	NA
RCF, per number ported (Residence Line)	TNPRL	$2.13	NA	$2.03	NA	$2.29	$2.34	$1.66	$2.17	$1.25
NRC	TNPRL	$0.65	NA	$0.51	NA	$0.49	$0.6441	$0.71	$0.7046	NA
NRC - Disconnect Charge	TNPRL	$0.07	NA	NA	NA	$0.05	$0.0644	$0.50	NA	NA
RCF, add'l capacity for simultaneous call forwarding, per additional path	N/A	$0.32	NA	$0.2836	NA	$0.38	$0.3838	$0.32	$0.3854	$0.50
RCF, per service order, per location	(++) Bus = TNPBD Res = TNPRD									
NRC - 1st	TNP++	$1.44	NA	$2.10	NA	$2.02	$2.84	$2.73	$1.37	$25.00
NRC - Add'l	TNP++	$1.44	NA	$2.10	NA	$2.02	$2.84	$2.73	$1.37	$25.00
NRC - Disconnect - 1st	TNP++	$1.44	NA	NA	NA	$2.01	$2.84	NA	NA	NA
NRC - Disconnect - Add'l	TNP++	$1.44	NA	NA	NA	$2.01	$2.84	NA	NA	NA
NRC - Incremental Charge - Manual Service Order - 1st	SOMAN	$27.37	NA	NA	NA	$18.14	$25.52	$45.80	NA	NA
NRC - Incremental Charge - Manual Service Order - Add'l	SOMAN	$27.37	NA	NA	NA	$18.14	$25.52	$45.80	NA	NA
NRC - Incremental Charge - Manual Service Order - Disconnect - 1st	SOMAN	$17.77	NA	NA	NA	$11.41	$16.06	NA	$44.70	NA
NRC - Incremental Charge - Manual Service Order - Disconnect - Add'l	SOMAN	$17.77	NA	NA	NA	$11.41	$16.06	NA	$44.70	NA
INTERIM SERVICE PROVIDER NUMBER PORTABILITY - DID										
DID per number ported, Residence - NRC	TNPDR	$1.18	NA	$0.93	NA	$0.89	$1.17	$2.25	$2.25	NA
DID per number ported, Residence - NRC - Disconnect	TNPDR	$1.18	NA	NA	NA	$0.90	$1.17	NA	NA	NA
DID per number ported, Business - NRC	TNPDB	$1.18	NA	$0.93	NA	$0.89	$1.17	$2.25	$2.25	NA
DID per number ported, Business - NRC - Disconnect	TNPDB	$1.18	NA	NA	NA	$0.90	$1.17	NA	NA	NA
DID per service order, per location										
NRC - 1st	TNPRD	$1.44	NA	$2.10	NA	$2.02	$2.84	$2.73	$1.37	NA
NRC - Add'l	TNPRD	$1.44	NA	$2.10	NA	$2.02	$2.84	$2.73	$1.37	NA
NRC - Disconnect - 1st	TNPRD	$1.44	NA	NA	NA	$2.01	$2.84	NA	$44.70	NA
NRC - Disconnect - Add'l	TNPRD	$1.44	NA	NA	NA	$2.01	$2.84	NA	$44.70	NA
NRC - Incremental Charge - Manual Service Order - 1st	SOMAN	$27.37	NA	$18.94	NA	$18.14	$25.52	$45.80	NA	NA
NRC - Incremental Charge - Manual Service Order - Add'l	SOMAN	$27.37	NA	NA	NA	$18.14	$25.52	$45.80	NA	NA
NRC - Incremental Charge - Manual Service Order - Disconnect - 1st	SOMAN	$17.77	NA	NA	NA	$11.41	$16.06	NA	NA	NA
NRC - Incremental Charge - Manual Service Order - Disconnect - Add'l	SOMAN	$17.77	NA	NA	NA	$11.41	$16.06	NA	NA	NA
DID, per trunk termination, Initial	TNPT2	$11.84	NA	$10.73	NA	$12.46	$13.78	$11.43	$13.16	NA
DID, per trunk termination, Initial - NRC	TNPT2	$173.73	NA	$135.47	NA	$129.69	$171.68	$217.88	$218.03	NA
DID, per trunk termination, Initial - Disconnect	TNPT2	$50.43	NA	NA	NA	$37.85	$49.86	NA	NA	NA
DID, per trunk termination, Subsequent	TNPT2	$11.84	NA	$10.73	NA	$12.46	$13.78	$11.43	$13.16	NA
DID, per trunk termination, Subsequent - NRC	TNPT2	$51.35	NA	$39.53	NA	$37.85	$50.69	$73.56	$73.63	NA
DID, per trunk termination, Subsequent - Disconnect	TNPT2	$25.00	NA	NA	NA	$18.75	$24.71	NA	NA	NA

NOTES:

If no rate is identified in the contract, the rate for the specific service or function will be as set forth in applicable BellSouth tariff or as negotiated by the Parties upon request by either Party.

1 Until the FCC issues its order implementing a cost recovery mechanism for permanent number portability, the Company will track its costs of providing interim SPNP with sufficient detail to verify the costs. This will facilitate the Florida PSCs consideration of the recovery of these costs in Docket 950737-TP. (FL)

2 BellSouth and CLEC will each bear their own costs of providing remote call forwarding as an interim number portability option. (KY)

Attachment 6

Ordering and Provisioning

TABLE OF CONTENTS

1. Quality of Ordering And Provisioning.....3

2. Access To Operational Support Systems 3

3. Miscellaneous Ordering And Provisioning Guidelines.....5

ORDERING AND PROVISIONING

1. Quality of Ordering and Provisioning

1.1 All the negotiated terms and conditions set forth in this Attachment pertain to ordering and provisioning.

1.2 BellSouth shall provide ordering and provisioning services to ACCESS Integrated that are equal to the ordering and provisioning services BellSouth provides to itself or any other CLEC, where technically feasible. The guidelines for ordering and provisioning are set forth in BellSouth Ordering Guide for CLECs, the BellSouth Guide to Interconnection, and the Electronic Business Rules for Local Ordering and the Local Exchange Ordering Implementation Guide, as appropriate, and as they are amended from time to time during this Agreement. The guides may be referenced at the following site: http://www.interconnection.bellsouth.com/guides/guides_p.html.

1.3 BellSouth shall provide all ordering and provisioning services to ACCESS Integrated during the same business hours of operation that BellSouth provisions service to its affiliates or end users. Ordering and provisioning support required by ACCESS Integrated outside of these hours will be considered outside of normal business hours and will be subject to overtime billing.

1.4 All other ACCESS Integrated requests for provisioning and installation services are considered outside of the normal hours of operation and may be performed subject to the application of overtime billing charges.

2. Access to Operations Support Systems

2.1 BellSouth shall provide ACCESS Integrated access to operations support systems ("OSS") functions for pre-ordering, ordering and provisioning, maintenance and repair and billing. Access to theOSS is available through a variety of means, including electronic interfaces. BellSouth also provides manual options. The OSS functions available to CLECs through electronic interfaces are:

2.2 Pre-Ordering. BellSouth provides electronic access to the following pre-ordering functions: service address validation, telephone number selection, service and feature availability, due date information, and upon Commission approval of confidentiality protections, to customer record information. Access is provided through the Local Exchange Navigation System (LENS) interface the Telecommunications Access Gateway (TAG) interface. Customer record information includes Customer Record Information includes but is not limited to, customer specific information in CRIS and RSAG. In addition, ACCESS Integrated shall provide to BellSouth access to

customer record information including electronic access where available. Otherwise, ACCESS Integrated shall provide paper copies of customer record information within a reasonable period of time upon request by BellSouth. The parties agree not to view, copy, or otherwise obtain access to the customer record information of any customer without that customer's permission and further agrees that ACCESS Integrated and BellSouth will obtain access to customer record information only in strict compliance with applicable laws, rules, or regulations of the State in which the service is provided.

2.3 Service Ordering and Provisioning. BellSouth provides electronic options for the exchange of ordering and provisioning information. BellSouth provides an Electronic Data Interchange (EDI) interface, the TAG ordering interface for non-complex and certain complex resale requests and certain network elements. The EDI interface can be integrated with the TAG pre-ordering interface by ACCESS Integratedor the TAG ordering interface. BellSouth provides integrated pre-ordering, ordering and provisioning capability through the LENS interface for non-complex and certain complex resale service requests.

2.4 Service Trouble Reporting and Repair. Service trouble reporting and repair allows ACCESS Integrated to report and monitor service troubles and obtain repair services. BellSouth shall offer ACCESS Integrated service trouble reporting in a non-discriminatory manner that provides ACCESS Integrated the equivalent ability to report and monitor service troubles that BellSouth provides to itself. BellSouth also provides ACCESS Integrated an estimated time to repair, an appointment time or a commitment time, as appropriate, on trouble reports. BellSouth provides several options for electronic trouble reporting. For exchange services, BellSouth offers ACCESS Integrated non-discriminatory access to the Trouble Analysis Facilitation Interface (TAFI). In addition, BellSouth offers an industry standard, machine-to-machine Electronic Communications Trouble Administration (ECTA) Gateway interface. For designed services, BellSouth provides non-discriminatory trouble reporting ECTA Gateway. BellSouth also offers ECTA functionality through the human-to-machine EC-CPM/TA interface. If the CLEC requests BellSouth to repair a trouble after normal working hours, the CLEC will be billed the appropriate overtime charges associated with this request pursuant to BellSouth’s tariffs.

2.5 Change Management. BellSouth provides a collaborative process for change management of the electronic interfaces through the Electronic Interface Change Control Process (“EICCP). Guidelines for this process are set forth in the EICCP document, and as it is amended from time to time during this agreement.

2.6 Migration of ACCESS Integrated to New Software Releases for National Standard Machine-to-Machine Electronic Interfaces. Pursuant to the change management process, BellSouth will issue new software releases for new industry standards for its industry standard, machine-to-machine electronic interfaces. When a new release of new industry standards is implemented, BellSouth will continue to support both the

new release (N) and the prior release (N-1). When BellSouth makes the next release (N+1), BellSouth will eliminate support for the (N-1) release and support the two newest releases (N and N+1). Thus, BellSouth will always support the two most current releases. BellSouth will issue documents to ACCESS Integrated with sufficient notice to allow ACCESS Integrated to make the necessary changes to their systems and operations to migrate to the newest release in a timely fashion.

2.7 Rates. All costs incurred by BellSouth to develop and implement operational interfaces to the OSS shall be recovered from the carriers that use the services. Charge for use of OSS shall be as set forth in Attachments 1 and 2 of this Agreement.

3. Miscellaneous Ordering and Provisioning Guidelines

3.1 Pending Orders. To ensure the most efficient use of facilities and resources, orders placed in the hold or pending status by ACCESS Integrated will be held for a maximum of thirty (30) days from the date the order is placed on hold. After such time, if ACCESS Integrated wishes to reinstate an order, ACCESS Integrated may be required to submit a new service order.

3.2 Single Point of Contact. ACCESS Integrated will be the single point of contact with BellSouth for ordering activity for network elements and other services used by ACCESS Integrated to provide services to its end users, except that BellSouth may accept an order directly from another CLEC, or BellSouth, acting with authorization of the affected end user. ACCESS Integrated and BellSouth shall each execute a blanket letter of authorization with respect to customer orders. The Parties shall each be entitled to adopt their own internal processes for verification of customer authorization for orders, provided, however, that such processes shall comply with applicable state and federal law including, until superseded, the FCC guidelines and orders applicable to Presubscribed Interexchange Carrier (PIC) changes including Un-PIC. Pursuant to such an order, BellSouth may disconnect any network element associated with the service to be disconnected and being used by ACCESS Integrated to provide service to that end user and reuse such network elements or facilities to enable such other LEC to provide service to the end user. BellSouth will notify ACCESS Integrated that such an order has been processed, but will not be required to notify ACCESS Integrated in advance of such processing.

3.3 Use of Facilities. When a customer of a CLEC elects to discontinue service and transfer service to another local exchange carrier, including BellSouth, BellSouth shall have the right to reuse the facilities provided to CLEC by BellSouth for retail or resale service, loop and/or port for that customer. In addition, BellSouth may disconnect and reuse facilities when the facility is in a denied state and BellSouth has received an order to establish new service or transfer of service from a customer or a customer's CLEC at the same address served by the denied facility.

3.3.1 Upon receipt of a service order, BellSouth will do the following:

3.3.1.1 Process disconnect and reconnect orders to provision the service which shall be due dated using current interval guidelines.

3.3.1.2 Reuse the serving facility for the retail, resale service, or network element at the same location.

3.3.1.3 Notify ACCESS Integrated after the disconnect order has been completed.

3.4 Contact Numbers. The Parties agree to provide one another with toll-free contact numbers for the purpose of ordering, provisioning and maintenance of services.

3.5 Subscription Functions. In cases where BellSouth performs subscription functions for an inter-exchange carrier (i.e. PIC and LPIC changes via Customer Account Record Exchange (CARE)), BellSouth will provide the affected inter-exchange carriers with the Operating Company Number (OCN) of the local provider for the purpose of obtaining end user billing account and other end user information required under subscription requirements.

3.6 Cancellation Charges. If ACCESS Integrated cancels an order for network elements or other services, any costs incurred by BellSouth in conjunction with the provisioning of that order will be recovered in accordance with FCC No. 1 Tariff, Section 5.4.

Attachment 7

Billing and Billing Accuracy Certification

TABLE OF CONTENTS

1. Payment and Billing Arrangements 3

2. Billing Accuracy Certification.....5

3. Billing Disputes.....6

4. RAO Hosting.....7

5. Optional Daily Usage File.....11

6. Access Daily Usage File.....14

7. Enhanced Optional Daily Usage File.....17

Rates…….Exhibit A

BILLING AND BILLING ACCURACY CERTIFICATION

1. Payment and Billing Arrangements

All negotiated rates, terms and conditions set forth in this Attachment pertain to billing and billing accuracy certifications.

1.1 Billing. BellSouth agrees to provide billing through the Carrier Access Billing System (CABS) and through the Customer Records Information System (CRIS) depending on the particular service(s) that ACCESS Integrated requests. BellSouth will bill and record in accordance with this Agreement those charges ACCESS Integrated incurs as a result of ACCESS Integrated purchasing from BellSouth Network Elements and Other Services as set forth in this Agreement. BellSouth will format all bills in CBOS Standard or CLUB/EDI format, depending on the type of service ordered. For those services where standards have not yet been developed, BellSouth's billing format will change as necessary when standards are finalized by the industry forum.

1.1.1 For any service(s) BellSouth orders from ACCESS Integrated, ACCESS Integrated shall bill BellSouth in CABS format.

1.1.2 If either Party requests multiple billing media or additional copies of bills, the Billing Party will provide these at a reasonable cost.

1.2 Master Account. After receiving certification as a local exchange company from the appropriate regulatory agency, ACCESS Integrated will provide the appropriate BellSouth account manager the necessary documentation to enable BellSouth to establish a master account for Local Interconnection, Network Elements and Other Services, and/or resold services. Such documentation shall include the Application for Master Account, proof of authority to provide telecommunications services, an Operating Company Number ("OCN") assigned by the National Exchange Carriers Association ("NECA"), Carrier Identification Code (CIC), Group Access Code (GAC), Access Customer Name and Address (ACNA) and a tax exemption certificate, if applicable.

1.3 Payment Responsibility. Payment of all charges will be the responsibility of ACCESS Integrated. ACCESS Integrated shall make payment to BellSouth for all services billed. BellSouth is not responsible for payments not received by ACCESS Integrated from ACCESS Integrated's customer. BellSouth will not become involved in billing disputes that may arise between ACCESS Integrated and ACCESS Integrated's customer. Payments made to BellSouth as payment on account will be credited to an accounts receivable master account and not to an end user's account.

1.4 Payment Due. The payment will be due on or before the next bill date (i.e., same date in the following month as the bill date) and is payable in immediately available funds. Payment is considered to have been made when received by BellSouth.

If the payment due date falls on a Sunday or on a Holiday which is observed on a Monday, the payment due date shall be the first non-Holiday day following such Sunday or Holiday. If the payment due date falls on a Saturday or on a Holiday which is observed on Tuesday, Wednesday, Thursday, or Friday, the payment due date shall be the last non-Holiday day preceding such Saturday or Holiday. If payment is not received by the payment due date, a late payment penalty, as set forth in Section 1.7, below, shall apply.

1.5 Tax Exemption. Upon proof of tax exempt certification from ACCESS Integrated, the total amount billed to ACCESS Integrated will not include those taxes or fees for which the CLEC is exempt. ACCESS Integrated will be solely responsible for the computation, tracking, reporting and payment of all taxes and like fees associated with the services provided to the end user of ACCESS Integrated.

1.6 Late Payment. If any portion of the payment is received by BellSouth after the payment due date as set forth preceding, or if any portion of the payment is received by BellSouth in funds that are not immediately available to BellSouth, then a late payment penalty shall be due to BellSouth. The late payment penalty shall be the portion of the payment not received by the payment due date times a late factor and will be applied on a per bill basis. The late factor shall be as set forth in Section A2 of the General Subscriber Services Tariff, Section B2 of the Private Line Service Tariff or Section E2 of the Intrastate Access Tariff, whichever BellSouth determines is appropriate. ACCESS Integrated will be charged a fee for all returned checks as set forth in Section A2 of the General Subscriber Services Tariff or pursuant to the applicable state law.

1.7 Discontinuing Service to ACCESS Integrated. The procedures for discontinuing service to ACCESS Integrated are as follows:

1.7.1 BellSouth reserves the right to suspend or terminate service for nonpayment of services or in the event of prohibited, unlawful or improper use of BellSouth facilities or service or any other violation or noncompliance by ACCESS Integrated of the rules and regulations contained in BellSouth's tariffs.

1.7.2 If payment of account is not received by the bill date in the month after the original bill date, BellSouth may provide written notice to ACCESS Integrated that additional applications for service will be refused and that any pending orders for service will not be completed if payment is not received by the fifteenth day following the date of the notice. In addition, BellSouth may, at the same time, give thirty (30)days notice to ACCESS Integrated at the billing address to discontinue the provision of existing services to ACCESS Integrated at any time thereafter.

1.7.3 In the case of such discontinuance, all billed charges, as well as applicable termination charges, shall become due.

1.7.4 If BellSouth does not discontinue the provision of the services involved on the date specified in the thirty days notice and ACCESS Integrated's noncompliance continues, nothing contained herein shall preclude BellSouth's right to discontinue the provision of the services to ACCESS Integrated without further notice.

1.7.5 If payment is not received or satisfactory arrangements made for payment by the date given in the written notification, ACCESS Integrated's services will be discontinued. Upon discontinuance of service on ACCESS Integrated's account, service to the ACCESS Integrated's end users will be denied. BellSouth will reestablish service at the request of the end user or ACCESS Integrated for BellSouth to reestablish service upon payment of the appropriate connection fee and subject to BellSouth's normal application procedures. ACCESS Integrated is solely responsible for notifying the end user of the proposed service disconnection. If within fifteen (15) days after an end user's service has been denied and no arrangements to reestablish service have been made consistent with this subsection, the end user's service will be disconnected.

1.8 Deposit Policy. When purchasing services from BellSouth, ACCESS Integrated will be required to complete the BellSouth Credit Profile and provide information regarding credit worthiness. Based on the results of the credit analysis, the Company reserves the right to secure the account with a suitable form of security deposit. Such security deposit shall take the form of cash, an Irrevocable Letter of Credit (BellSouth form), Surety Bond (BellSouth form) or, in its sole discretion, some other form of security. Any such security deposit shall in no way release ACCESS Integrated from his obligation to make complete and timely payments of his bill. Such security shall be required prior to the inauguration of service. If, in the sole opinion of BellSouth, circumstances so warrant and/or gross monthly billing has increased beyond the level initially used to determine the level of security, the BellSouth reserves the right to request additional security and/or file a Uniform Commercial Code (UCC1) security interest in ACCESS Integrated's "accounts receivables and proceeds." Interest on a security deposit, if provided in cash, shall accrue and be paid in accordance with the terms in the appropriate BellSouth tariff.

1.9 Rates. Rates for Optional Daily Usage File (ODUF), Enhanced Optional Daily Usage File (EODUF), Access Daily Usage File (ADUF), and Centralized Message Distribution Service (CMDS) are set out in Exhibit A to this Attachment. If no rate is identified in this Attachment, the rate for the specific service or function will be as set forth in applicable BellSouth tariff or as negotiated by the Parties upon request by either Party.

2. Billing Accuracy Certification

2.1 Upon request, BellSouth and ACCESS Integrated will agree upon a billing quality assurance program for all billing elements covered in this Agreement that will eliminate the need for post-billing reconciliation. Appropriate terms for access to any

BellSouth documents, systems, records, and procedures for the recording and billing of charges will be part of that program.

2.2 As part of the billing quality assurance program, BellSouth and ACCESS Integrated will develop standards, measurements, and performance requirements for a local billing measurements process. On a regular basis BellSouth will provide ACCESS Integrated with mutually agreed upon performance measurement data that substantiates the accuracy, reliability, and integrity of the billing process for local billing. In return, ACCESS Integrated will pay all bills received from BellSouth in full by the payment due date.

2.3 Local billing discrepancies will be addressed in an orderly manner via a mutually agreed upon billing exemption process.

2.3.1 Each Party agrees to notify the other Party upon identifying a billing discrepancy. The Parties shall endeavor to resolve any billing discrepancy within sixty (60) calendar days of the notification date. A mutually agreed upon escalation process will be established for resolving local billing discrepancies as part of the billing quality assurance program.

2.3.2 Closure of a specific billing period will occur by joint agreement of the Parties whereby the Parties agree that such billing period is closed to any further analysis and financial transactions except those resulting from regulatory mandates. Closure will take place within a mutually agreed upon time interval from the bill date. The month being closed represents those charges that were billed or should have been billed by the designated bill date.

3. Billing Disputes

3.1 Where the Parties have not agreed upon a billing quality assurance program, billing disputes shall be handled pursuant to the terms of this section.

3.1.1 Each Party agrees to notify the other Party in writing upon the discovery of a billing dispute. In the event of a billing dispute, the Parties will endeavor to resolve the dispute within sixty (60) calendar days of the notification date.

3.2 If a Party disputes a charge and does not pay such charge by the payment due date, or if a payment or any portion of a payment is received by either Party after the payment due date, or if a payment or any portion of a payment is received in funds which are not immediately available to the other Party, then a late payment penalty shall be assessed. For bills rendered by either Party for payment, the late payment charge for both Parties shall be calculated based on the portion of the payment not received by the payment due date times the late factor as set forth in the following BellSouth tariffs: for services purchased from the General Subscribers Services Tariff for

purposes of resale and for ports and non-designed loops, Section A2 of the General Subscriber Services Tariff; for services purchased from the Private Line Tariff for purposes of resale, Section B2 of the Private Line Service Tariff; and for network elements and other services and local interconnection charges, Section E2 of the Access Service Tariff. In no event, however, shall interest be assessed by either Party on any previously assessed late payment charges. The Parties shall assess interest on previously assessed late payment charges only in a state where it has the authority pursuant to its tariffs.

4. RAO Hosting

4.1 RAO Hosting, Calling Card and Third Number Settlement System (CATS) and Non-Intercompany Settlement System (NICS) services provided to ACCESS Integrated by BellSouth will be in accordance with the methods and practices regularly adopted and applied by BellSouth to its own operations during the term of this Agreement, including such revisions as may be made from time to time by BellSouth.

4.2 ACCESS Integrated shall furnish all relevant information required by BellSouth for the provision of RAO Hosting, CATS and NICS.

4.3 Compensation amounts, if applicable, will be billed by BellSouth to ACCESS Integrated on a monthly basis in arrears. Amounts due from one Party to the other (excluding adjustments) are payable within thirty (30) days of receipt of the billing statement.

4.4 ACCESS Integrated must have its own unique hosted RAO code. Requests for establishment of RAO status where BellSouth is the selected Centralized Message Distribution System (CMDS) interfacing host, require written notification from ACCESS Integratedto the BellSouth RAO Hosting coordinator at least eight (8) weeks prior to the proposed effective date. The proposed effective date will be mutually agreed upon between the Parties with consideration given to time necessary for the completion of required Telcordia (formerly BellCore) functions. BellSouth will request the assignment of an RAO code from its connecting contractor, currently Telcordia (formerly BellCore), on behalf of ACCESS Integrated and will coordinate all associated conversion activities.

4.5 BellSouth will receive messages from ACCESS Integrated that are to be processed by BellSouth, another LEC or CLEC in the BellSouth region or a LEC outside the BellSouth region.

4.6 BellSouth will perform invoice sequence checking, standard EMI format editing, and balancing of message data with the EMI trailer record counts on all data received from ACCESS Integrated.

4.7 All data received from ACCESS Integrated that is to be processed or billed by another LEC or CLEC within the BellSouth region will be distributed to that LEC or CLEC in accordance with the Agreement(s) which may be in effect between BellSouth and the involved LEC or CLEC.

4.8 All data received from ACCESS Integrated that is to be placed on the CMDS network for distribution outside the BellSouth region will be handled in accordance with the agreement(s) which may be in effect between BellSouth and its connecting contractor (currently Telcordia (formerly BellCore)).

4.9 BellSouth will receive messages from the CMDS network that are destined to be processed by ACCESS Integrated and will forward them to ACCESS Integrated on a daily basis.

4.10 Transmission of message data between BellSouth and ACCESS Integrated will be via CONNECT:Direct.

4.11 All messages and related data exchanged between BellSouth and ACCESS Integrated will be formatted in accordance with accepted industry standards for EMI formatted records and packed between appropriate EMI header and trailer records, also in accordance with accepted industry standards.

4.12 ACCESS Integrated will ensure that the recorded message detail necessary to recreate files provided to BellSouth will be maintained for back-up purposes for a period of three (3) calendar months beyond the related message dates.

4.13 Should it become necessary for ACCESS Integrated to send data to BellSouth more than sixty (60) days past the message date(s), ACCESS Integrated will notify BellSouth in advance of the transmission of the data. If there will be impacts outside the BellSouth region, BellSouth will work with its connecting contractor and ACCESS Integrated to notify all affected Parties.

4.14 In the event that data to be exchanged between the two Parties should become lost or destroyed, both Parties will work together to determine the source of the problem. Once the cause of the problem has been jointly determined and the responsible Party (BellSouth or ACCESS Integrated) identified and agreed to, the company responsible for creating the data (BellSouth or ACCESS Integrated) will make every effort to have the affected data restored and retransmitted. If the data cannot be retrieved, the responsible Party will be liable to the other Party for any resulting lost revenue. Lost revenue may be a combination of revenues that could not be billed to the end users and associated access revenues. Both Parties will work together to estimate the revenue amount based upon historical data through a method mutually agreed upon. The resulting estimated revenue loss will be paid by the responsible Party to the other Party within three (3) calendar months of the date of problem resolution, or as mutually agreed upon by the Parties.

4.15 Should an error be detected by the EMI format edits performed by BellSouth on data received from ACCESS Integrated, the entire pack containing the affected data will not be processed by BellSouth. BellSouth will notify ACCESS Integrated of the error condition. ACCESS Integrated will correct the error(s) and will resend the entire pack to BellSouth for processing. In the event that an out-of-sequence condition occurs on subsequent packs, ACCESS Integrated will resend these packs to BellSouth after the pack containing the error has been successfully reprocessed by BellSouth.

4.16 In association with message distribution service, BellSouth will provide ACCESS Integrated with associated intercompany settlements reports (CATS and NICS) as appropriate.

4.17 In no case shall either Party be liable to the other for any direct or consequential damages incurred as a result of the obligations set out in this Agreement.

4.18 RAO Compensation

4.18.1 Rates for message distribution service provided by BellSouth for ACCESS Integrated are as set forth in Exhibit A to this Attachment.

4.18.2 Rates for data transmission associated with message distribution service are as set forth in Exhibit A to this Attachment .

4.18.3 Data circuits (private line or dial-up) will be required between BellSouth and ACCESS Integrated for the purpose of data transmission. Where a dedicated line is required, ACCESS Integrated will be responsible for ordering the circuit, overseeing its installation and coordinating the installation with BellSouth. ACCESS Integrated will also be responsible for any charges associated with this line. Equipment required on the BellSouth end to attach the line to the mainframe computer and to transmit successfully ongoing will be negotiated on a case by case basis. Where a dial-up facility is required, dial circuits will be installed in the BellSouth data center by BellSouth and the associated charges assessed to ACCESS Integrated. Additionally, all message toll charges associated with the use of the dial circuit by ACCESS Integrated will be the responsibility of ACCESS Integrated. Associated equipment on the BellSouth end, including a modem, will be negotiated on a case by case basis between the Parties.

4.18.4 All equipment, including modems and software, that is required on the ACCESS Integrated end for the purpose of data transmission will be the responsibility of ACCESS Integrated.

4.19 Intercompany Settlements Messages

4.19.1 This Section addresses the settlement of revenues associated with traffic originated from or billed by ACCESS Integrated as a facilities based provider of local exchange telecommunications services outside the BellSouth region. Only traffic that originates in one Bell operating territory and bills in another Bell operating territory is included. Traffic that originates and bills within the same Bell operating territory will be settled on a local basis between ACCESS Integrated and the involved company(ies), unless that company is participating in NICS.

4.19.2 Both traffic that originates outside the BellSouth region by ACCESS Integrated and is billed within the BellSouth region, and traffic that originates within the BellSouth region and is billed outside the BellSouth region by ACCESS Integrated, is covered by this Agreement (CATS). Also covered is traffic that either is originated by or billed by ACCESS Integrated, involves a company other than ACCESS Integrated, qualifies for inclusion in the CATS settlement, and is not originated or billed within the BellSouth region (NICS).

4.19.3 Once ACCESS Integrated is operating within the BellSouth territory, revenues associated with calls originated and billed within the BellSouth region will be settled via Telcordia (formerly BellCore)'s, its successor or assign, NICS system.

4.19.4 BellSouth will receive the monthly NICS reports from Telcordia (formerly BellCore), its successor or assign, on behalf of ACCESS Integrated. BellSouth will distribute copies of these reports to ACCESS Integratedon a monthly basis.

4.19.5 BellSouth will receive the monthly Calling Card and Third Number Settlement System (CATS) reports from Telcordia (formerly BellCore), its successor or assign, on behalf of ACCESS Integrated. BellSouth will distribute copies of these reports to ACCESS Integrated on a monthly basis.

4.19.6 BellSouth will collect the revenue earned by ACCESS Integrated from the Bell operating company in whose territory the messages are billed (CATS), less a per message billing and collection fee of five cents ($0.05), on behalf of ACCESS Integrated. BellSouth will remit the revenue billed by ACCESS Integrated to the Bell operating company in whose territory the messages originated, less a per message billing and collection fee of five cents ($0.05), on behalf on ACCESS Integrated. These two amounts will be netted together by BellSouth and the resulting charge or credit issued to ACCESS Integrated via a monthly Carrier Access Billing System (CABS) miscellaneous bill.

4.19.7 BellSouth will collect the revenue earned by ACCESS Integrated within the BellSouth territory from another CLEC also within the BellSouth territory (NICS) where the messages are billed, less a per message billing and collection fee of five cents ($0.05), on behalf of ACCESS Integrated. BellSouth will remit the revenue billed by ACCESS Integrated within the BellSouth region to the CLEC also within the BellSouth region, where the messages originated, less a per message billing and

collection fee of five cents ($0.05). These two amounts will be netted together by BellSouth and the resulting charge or credit issued to ACCESS Integrated via a monthly Carrier Access Billing System (CABS) miscellaneous bill.

BellSouth and ACCESS Integrated agree that monthly netted amounts of less than fifty dollars ($50.00) will not be settled.

5. Optional Daily Usage File

5.1 Upon written request from ACCESS Integrated, BellSouth will provide the Optional Daily Usage File (ODUF) service to ACCESS Integrated pursuant to the terms and conditions set forth in this section.

5.2 The ACCESS Integrated shall furnish all relevant information required by BellSouth for the provision of the Optional Daily Usage File.

5.3 The Optional Daily Usage Feed will contain billable messages that were carried over the BellSouth Network and processed in the BellSouth Billing System, but billed to a ACCESS Integrated customer.

Charges for delivery of the Optional Daily Usage File will appear on the ACCESS Integrateds' monthly bills. The charges are as set forth in Exhibit A to this Attachment.

5.4 The Optional Daily Usage Feed will contain both rated and unrated messages. All messages will be in the standard Alliance for Telecommunications Industry Solutions (ATIS) EMI record format.

5.5 Messages that error in the billing system of the ACCESS Integrated will be the responsibility of the ACCESS Integrated. If, however, the ACCESS Integrated should encounter significant volumes of errored messages that prevent processing by the ACCESS Integrated within its systems, BellSouth will work with the ACCESS Integrated to determine the source of the errors and the appropriate resolution.

5.6 The following specifications shall apply to the Optional Daily Usage Feed.

5.6.1 Usage To Be Transmitted

5.6.1.1 The following messages recorded by BellSouth will be transmitted to the ACCESS Integrated:

- Message recording for per use/per activation type services (examples: Three Way Calling, Verify, Interrupt, Call Return, ETC.)
- Measured billable Local

- Directory Assistance messages
- IntraLATA Toll
- WATS & 800 Service

- N11
- Information Service Provider Messages
- Operator Services Messages
- Operator Services Message Attempted Calls (Network Element only)
- Credit/Cancel Records
- Usage for Voice Mail Message Service

5.6.1.2 Rated Incollects (originated in BellSouth and from other companies) can also be on Optional Daily Usage File. Rated Incollects will be intermingled with BellSouth recorded rated and unrated usage. Rated Incollects will not be packed separately.

5.6.1.3 BellSouth will perform duplicate record checks on records processed to Optional Daily Usage File. Any duplicate messages detected will be deleted and not sent to ACCESS Integrated.

5.6.1.4 In the event that ACCESS Integrated detects a duplicate on Optional Daily Usage File they receive from BellSouth, ACCESS Integrated will drop the duplicate message (ACCESS Integrated will not return the duplicate to BellSouth).

5.6.2 Physical File Characteristics

5.6.2.1 The Optional Daily Usage File will be distributed to ACCESS Integrated via an agreed medium with CONNECT:Direct being the preferred transport method. The Daily Usage Feed will be a variable block format (2476) with an LRECL of 2472. The data on the Daily Usage Feed will be in a non-compacted EMI format (175 byte format plus modules). It will be created on a daily basis (Monday through Friday except holidays). Details such as dataset name and delivery schedule will be addressed during negotiations of the distribution medium. There will be a maximum of one dataset per workday per OCN.

5.6.2.2 Data circuits (private line or dial-up) may be required between BellSouth and ACCESS Integrated for the purpose of data transmission. Where a dedicated line is required, ACCESS Integrated will be responsible for ordering the circuit, overseeing its installation and coordinating the installation with BellSouth. ACCESS Integrated will also be responsible for any charges associated with this line. Equipment required on the BellSouth end to attach the line to the mainframe computer and to transmit successfully ongoing will be negotiated on a case by case basis. Where a dial-up facility is required, dial circuits will be installed in the BellSouth data center by BellSouth and the associated charges assessed to ACCESS Integrated. Additionally, all message toll charges associated with the use of the dial circuit by ACCESS Integrated will be the responsibility of ACCESS Integrated. Associated equipment on

the BellSouth end, including a modem, will be negotiated on a case by case basis between the Parties. All equipment, including modems and software, that is required on ACCESS Integrated end for the purpose of data transmission will be the responsibility of ACCESS Integrated.

5.6.3 Packing Specifications

5.6.3.1 A pack will contain a minimum of one message record or a maximum of 99,999 message records plus a pack header record and a pack trailer record. One transmission can contain a maximum of 99 packs and a minimum of one pack.

5.6.3.2 The OCN, From RAO, and Invoice Number will control the invoice sequencing. The From RAO will be used to identify to ACCESS Integrated which BellSouth RAO that is sending the message. BellSouth and ACCESS Integrated will use the invoice sequencing to control data exchange. BellSouth will be notified of sequence failures identified by ACCESS Integrated and resend the data as appropriate.

The data will be packed using ATIS EMI records.

5.6.4 Pack Rejection

5.6.4.1 ACCESS Integrated will notify BellSouth within one business day of rejected packs (via the mutually agreed medium). Packs could be rejected because of pack sequencing discrepancies or a critical edit failure on the Pack Header or Pack Trailer records (i.e. out-of-balance condition on grand totals, invalid data populated). Standard ATIS EMI Error Codes will be used. ACCESS Integrated will not be required to return the actual rejected data to BellSouth. Rejected packs will be corrected and retransmitted to ACCESS Integrated by BellSouth.

5.6.5 Control Data

ACCESS Integrated will send one confirmation record per pack that is received from BellSouth. This confirmation record will indicate ACCESS Integrated received the pack and the acceptance or rejection of the pack. Pack Status Code(s) will be populated using standard ATIS EMI error codes for packs that were rejected by ACCESS Integrated for reasons stated in the above section.

5.6.6 Testing

5.6.6.1 Upon request from ACCESS Integrated, BellSouth shall send test files to ACCESS Integrated for the Optional Daily Usage File. The Parties agree to review and discuss the file's content and/or format. For testing of usage results, BellSouth shall request that ACCESS Integrated set up a production (LIVE) file. The live test may consist of ACCESS Integrated's employees making test calls for the types of services ACCESS Integrated requests on the Optional Daily Usage File. These test calls are logged by

ACCESS Integrated, and the logs are provided to BellSouth. These logs will be used to verify the files. Testing will be completed within 30 calendar days from the date on which the initial test file was sent.

6. Access Daily Usage File

6.1. Upon written request from ACCESS Integrated, BellSouth will provide the Access Daily Usage File (ADUF) service to ACCESS Integrated pursuant to the terms and conditions set forth in this section.

6.2 The ACCESS Integrated shall furnish all relevant information required by BellSouth for the provision of the Access Daily Usage File.

6.3 The Access Daily Usage Feed will contain access messages associated with a port that ACCESS Integrated has purchased from BellSouth

6.4 Charges for delivery of the Access Daily Usage File will appear on the ACCESS Integrateds' monthly bills. The charges are as set forth in Exhibit A to this Attachment. All messages will be in the standard Alliance for Telecommunications Industry Solutions (ATIS) EMI record format.

6.5 Messages that error in the billing system of the ACCESS Integrated will be the responsibility of the ACCESS Integrated. If, however, the ACCESS Integrated should encounter significant volumes of errored messages that prevent processing by the ACCESS Integrated within its systems, BellSouth will work with the ACCESS Integrated to determine the source of the errors and the appropriate resolution.

6.6 Usage To Be Transmitted

6.6.1 The following messages recorded by BellSouth will be transmitted to ACCESS Integrated:

Originating and terminating interstate and intrastate access records associated with a port.

Terminating access records for undetermined jurisdiction access records associated with a port.

6.6.2 When ACCESS Integrated purchases Network Element ports from BellSouth and calls are made using these ports, BellSouth will handle the calls as follows:

Originating from Network Element and carried by Interexchange Carrier:

BellSouth will bill network element to CLEC and send

access record to the CLEC via ADUF

Originating from network element and carried by BellSouth (ACCESS Integrated is BellSouth's toll customer):

BellSouth will bill resale toll rates to ACCESS Integrated and send toll record for the end user toll billing purposes via ODUF (Optional Daily Usage File). Access record will be sent to ACCESS Integrated via ADUF.

Terminating on network element and carried by Interexchange Carrier:

BellSouth will bill network element to ACCESS Integrated and send access record to ACCESS Integrated.

Terminating on network element and carried by BellSouth:

BellSouth will bill network element to ACCESS Integrated and send access record to ACCESS Integrated.

6.6.3 BellSouth will perform duplicate record checks on records processed to the Access Daily Usage File. Any duplicate messages detected will be dropped and not sent to ACCESS Integrated.

6.6.4 In the event that ACCESS Integrated detects a duplicate on the Access Daily Usage File they receive from BellSouth, ACCESS Integrated will drop the duplicate message (ACCESS Integrated will not return the duplicate to BellSouth.)

6.6.5 Physical File Characteristics

6.6.5.1 The Access Daily Usage File will be distributed to ACCESS Integrated via an agreed medium with CONNECT:Direct being the preferred transport method. The Daily Usage Feed will be a fixed block format (2476) with an LRECL of 2472. The data on the Daily Usage Feed will be in a non-compacted EMI format (210 byte format plus modules). It will be created on a daily basis (Monday through Friday except holidays). Details such as dataset name and delivery schedule will be addressed during negotiations of the distribution medium. There will be a maximum of one dataset per workday per OCN.

6.6.5.2 Data circuits (private line or dial-up) may be required between BellSouth and ACCESS Integrated for the purpose of data transmission. Where a dedicated line is required, ACCESS Integrated will be responsible for ordering the circuit, overseeing its installation and coordinating the installation with BellSouth. ACCESS Integrated will also be responsible for any charges associated with this line. Equipment required on the BellSouth end to attach the line to the mainframe computer and to transmit successfully ongoing will be negotiated on a case by case basis. Where a dial-up

facility is required, dial circuits will be installed in the BellSouth data center by BellSouth and the associated charges assessed to ACCESS Integrated. Additionally, all message toll charges associated with the use of the dial circuit by ACCESS Integrated will be the responsibility of ACCESS Integrated. Associated equipment on the BellSouth end, including a modem, will be negotiated on a case by case basis between the Parties. All equipment, including modems and software, that is required on ACCESS Integrated end for the purpose of data transmission will be the responsibility of ACCESS Integrated.

6.6.6 Packing Specifications

6.6.6.1 A pack will contain a minimum of one message record or a maximum of 99,999 message records plus a pack header record and a pack trailer record. One transmission can contain a maximum of 99 packs and a minimum of one pack.

6.6.6.2 The OCN, From RAO, and Invoice Number will control the invoice sequencing. The From RAO will be used to identify to ACCESS Integrated which BellSouth RAO that is sending the message. BellSouth and ACCESS Integrated will use the invoice sequencing to control data exchange. BellSouth will be notified of sequence failures identified by ACCESS Integrated and resend the data as appropriate.

The data will be packed using ATIS EMI records.

6.6.7 Pack Rejection

6.6.7.1 ACCESS Integrated will notify BellSouth within one business day of rejected packs (via the mutually agreed medium). Packs could be rejected because of pack sequencing discrepancies or a critical edit failure on the Pack Header or Pack Trailer records (i.e. out-of-balance condition on grand totals, invalid data populated). Standard ATIS EMI Error Codes will be used. ACCESS Integrated will not be required to return the actual rejected data to BellSouth. Rejected packs will be corrected and retransmitted to ACCESS Integrated by BellSouth.

6.6.8 Control Data

ACCESS Integrated will send one confirmation record per pack that is received from BellSouth. This confirmation record will indicate ACCESS Integrated received the pack and the acceptance or rejection of the pack. Pack Status Code(s) will be populated using standard ATIS EMI error codes for packs that were rejected by ACCESS Integrated for reasons stated in the above section.

6.6.9 Testing

6.6.9.1 Upon request from ACCESS Integrated, BellSouth shall send test files to ACCESS Integrated for the Access Daily Usage File. Testing shall consist of actual calls made

from live accounts. A call log shall be supplied along with test request information. The Parties agree to review and discuss the file's content and/or format.

7. Enhanced Optional Daily Usage File

7.1 Upon written request from ACCESS Integrated, BellSouth will provide the Enhanced Optional Daily Usage File (EODUF) service to ACCESS Integrated pursuant to the terms and conditions set forth in this section. EODUF will only be sent to existing ODUF subscribers who request the EODUF option.

7.2 The ACCESS Integrated shall furnish all relevant information required by BellSouth for the provision of the Enhanced Optional Daily Usage File.

7.3 The Enhanced Optional Daily Usage File (EODUF) will provide usage data for local calls originating from resold Flat Rate Business and Residential Lines.

Charges for delivery of the Enhanced Optional Daily Usage File will appear on the ACCESS Integrateds' monthly bills. The charges are as set forth in Exhibit A to this Attachment.

7.4 All messages will be in the standard Alliance for Telecommunications Industry Solutions (ATIS) EMI record format.

7.5 Messages that error in the billing system of the ACCESS Integrated will be the responsibility of the ACCESS Integrated. If, however, the ACCESS Integrated should encounter significant volumes of errored messages that prevent processing by the ACCESS Integrated within its systems, BellSouth will work with the ACCESS Integrated to determine the source of the errors and the appropriate resolution.

7.6 The following specifications shall apply to the Optional Daily Usage Feed.

7.6.1 Usage To Be Transmitted

7.6.1.1 The following messages recorded by BellSouth will be transmitted to the ACCESS Integrated:

Customer usage data for flat rated local call originating from CLEC end user lines (1FB or 1FR). The EODUF record for flat rate messages will include:

Date of Call
From Number
To Number
Connect Time
Conversation Time

Method of Recording
From RAO
Rate Class
Message Type
Billing Indicators
Bill to Number

7.6.1.2 BellSouth will perform duplicate record checks on EODUF records processed to Optional Daily Usage File. Any duplicate messages detected will be deleted and not sent to ACCESS Integrated.

7.6.1.3 In the event that ACCESS Integrated detects a duplicate on Enhanced Optional Daily Usage File they receive from BellSouth, ACCESS Integrated will drop the duplicate message (ACCESS Integrated will not return the duplicate to BellSouth).

7.6.2 Physical File Characteristics

7.6.2.1 The Enhanced Optional Daily Usage Feed will be distributed to ACCESS Integrated over their existing Optional Daily Usage File (ODUF) feed. The EODUF messages will be intermingled among ACCESS Integrated's Optional Daily Usage File (ODUF) messages. The EODUF will be a variable block format (2476) with an LRECL of 2472. The data on the EODUF will be in a non-compacted EMI format (175 byte format plus modules). It will be created on a daily basis (Monday through Friday except holidays).

7.6.2.2 Data circuits (private line or dial-up) may be required between BellSouth and ACCESS Integrated for the purpose of data transmission. Where a dedicated line is required, ACCESS Integrated will be responsible for ordering the circuit, overseeing its installation and coordinating the installation with BellSouth. ACCESS Integrated will also be responsible for any charges associated with this line. Equipment required on the BellSouth end to attach the line to the mainframe computer and to transmit successfully ongoing will be negotiated on a case by case basis. Where a dial-up facility is required, dial circuits will be installed in the BellSouth data center by BellSouth and the associated charges assessed to ACCESS Integrated. Additionally, all message toll charges associated with the use of the dial circuit by ACCESS Integrated will be the responsibility of ACCESS Integrated. Associated equipment on the BellSouth end, including a modem, will be negotiated on a case by case basis between the Parties. All equipment, including modems and software, that is required on ACCESS Integrated end for the purpose of data transmission will be the responsibility of ACCESS Integrated.

7.6.3 Packing Specifications

7.6.3.1 A pack will contain a minimum of one message record or a maximum of 99,999 message records plus a pack header record and a pack trailer record. One transmission can contain a maximum of 99 packs and a minimum of one pack.

7.6.3.2 The Operating Company Number (OCN), From Revenue Accounting Office (RAO), and Invoice Number will control the invoice sequencing. The From RAO will be used to identify to ACCESS Integrated which BellSouth RAO that is sending the message. BellSouth and ACCESS Integrated will use the invoice sequencing to control data exchange. BellSouth will be notified of sequence failures identified by ACCESS Integrated and resend the data as appropriate.

The data will be packed using ATIS EMI records.

BELLSOUTH/ACCESS INTEGRATED RATES
ODUF/EDOUF/ADUF/CMDS

		RATES BY STATE								
DESCRIPTION	**USOC**	**AL**	**FL**	**GA**	**KY**	**LA**	**MS**	**NC**	**SC**	**TN**
ODUF/EODUF/ADUF/CMDS										
ODUF: Recording, per message	N/A	$0.0002	$0.008	$0.008	$0.0008611	$0.00019	$0.0001179	$0.008	$0.0002862	$0.008
ODUF: Message Processing, per message	N/A	$0.0033	$0.004	$0.004	$0.0032357	$0.0024	$0.0032089	$0.004	$0.0032344	$0.004
EODUF: Message Processing, per message	N/A	$0.004	$0.004	$0.004	$0.004	$0.004	$0.004	$0.004	$0.004	$0.004
ADUF: Message Processing, per message	N/A	$0.004	$0.004	$0.004	$0.004	$0.004	$0.004	$0.004	$0.004	$0.004
CMDS: Message Processing, per message	N/A	$0.004	$0.004	$0.004	$0.004	$0.004	$0.004	$0.004	$0.004	$0.004
ODUF: Message Processing, per magnetic tape provisioned	N/A	$55.19	$54.95	$54.95	$55.68	$47.30	$54.62	$54.95	$54.72	$54.95
EODUF: Message Processing, per magnetic tape provisioned	N/A	$47.30	$47.30	$47.30	$47.30	$47.30	$47.30	$47.30	$47.30	$47.30
ODUF: Data Transmission (CONNECT:DIRECT), per message	N/A	$0.00004	$0.001	$0.001	$0.0000365	$0.00003	$0.0000354	$0.001	$0.0000357	$0.001
EODUF: Data Transmission (CONNECT:DIRECT), per message	N/A	$0.0000364	$0.0000364	$0.0000364	$0.0000364	$0.0000364	$0.0000364	$0.0000364	$0.0000364	$0.0000364
ADUF: Data Transmission (CONNECT:DIRECT), per message	N/A	$0.001	$0.001	$0.001	$0.001	$0.001	$0.001	$0.001	$0.001	$0.001
CMDS: Data Transmission (CONNECT:DIRECT), per message	N/A	$0.001	$0.001	$0.001	$0.001	$0.001	$0.001	$0.001	$0.001	$0.001

NOTES:

If no rate is identified in the contract, the rate for the specific service or function will be as set forth in applicable BellSouth tariff or as negotiated by the parties upon request by either party.

Attachment 8

Rights-of-Way, Conduits and Pole Attachments

Rights-of-Way, Conduits and Pole Attachments

BellSouth will provide nondiscriminatory access to any pole, duct, conduit, or right-of-way owned or controlled by BellSouth pursuant to 47 U.S.C. § 224, as amended by the Act, pursuant to terms and conditions of a license agreement subsequently negotiated with BellSouth's Competitive Structure Provisioning Center.

Attachment 9

Performance Measurements

TABLE OF CONTENTS

Service Performance Measurements And Enforcement Mechanisms 3

1. Scope 3

2. Reporting 3

3. Modifications to Measurements 3

4. Enforcement Mechanisms 4

EXHIBIT A 10

EXHIBIT B 77

EXHIBIT C 83

EXHIBIT D 99

EXHIBIT E 105

Service Performance Measurements And Enforcement Mechanisms

1. Scope

This Attachment includes Enforcement Measurements with corresponding Enforcement Mechanisms applicable to this Agreement.

2. Reporting

2.1 In providing services pursuant to this Agreement, BellSouth will report its performance to CLEC-1 in accordance with BellSouth's Service Quality Measurements, which are contained in this Attachment as Exhibit A and in accordance with BellSouth's Enforcement Measurements, which are contained in this Attachment as Exhibit B.

2.2 BellSouth will make performance reports available to CLEC-1 on a monthly basis. The reports will contain information collected in each performance category and will be available to CLEC-1 through some electronic medium to be determined by BellSouth. BellSouth will also provide electronic access to the raw data underlying the performance measurements. Within thirty (30) days of execution of this Agreement, BellSouth will provide a detailed session of instruction to CLEC-1 regarding access to the reports and to the raw data as well as the nature of the format of the data provided.

3. Modifications to Measurements

3.1 Service Quality Measurements

3.1.1 BellSouth will update the Service Quality Measurements contained in Exhibit A of this Attachment each calendar quarter. BellSouth will not delete any Service Quality Measurement without prior written consent of CLEC-1. CLEC-1 may provide input to BellSouth regarding any suggested additions, deletions or other modifications to the Service Quality Measurements. BellSouth will provide notice of all changes to the Service Quality Measurements via BellSouth's internet website.

3.1.2 Notwithstanding the foregoing, BellSouth may, from time to time, be ordered by a regulatory or judicial body to modify or amend the Service Quality Measurements. BellSouth will make all such changes to the Service Quality Measurements pursuant to Section ___ of the General Terms and Conditions of this Agreement, incorporated herein by reference.

3.1.3 Notwithstanding any other provision of this Agreement, in the event

a dispute arises regarding the modification or amendment of the Service Quality Measurements, the parties will refer the dispute to the Commission.

3.2 Enforcement Measurements and Statistical Test

3.2.1 In order for BellSouth to accurately administer the Enforcement Measurements contained in Exhibit B of this Attachment, the Enforcement Measurements shall be modified or amended only if BellSouth determines such modification or amendment is necessary. However, BellSouth will not delete any Enforcement Measurement without prior written consent of CLEC-1. BellSouth will notify CLEC-1 of any such modification or amendment to the Enforcement Measurements via BellSouth's internet website.

3.2.2 Notwithstanding the foregoing, BellSouth may, from time to time, be ordered by a regulatory or judicial body to modify or amend the Enforcement Measurements and/or Statistical Test. BellSouth will make all such changes to the Enforcement Measurements and/or Statistical Test pursuant to Section ___ of the General Terms and Conditions of this Agreement, incorporated herein by reference.

3.2.3 Notwithstanding any other provision of this Agreement, in the event a dispute arises regarding the modification or amendment of the Enforcement Measurements and/or Statistical Test, the parties will refer the dispute to the Commission.

4. Enforcement Mechanisms

4.1 Purpose

This section establishes meaningful and significant enforcement mechanisms voluntarily provided by BellSouth to verify and maintain compliance between BellSouth and CLEC-1's operations as well as to maintain access to Operational Support System (OSS) functions. This section provides the terms and conditions for such self-effectuating enforcement mechanisms.

4.2 Effective Date

The enforcement mechanisms set forth in this section shall only become effective upon an effective FCC order, which has not been stayed, authorizing BellSouth to provide interLATA telecommunications services under section 271 of the Act within a particular state and shall only apply to BellSouth's performance in any state in which the FCC has granted BellSouth interLATA authority.

4.3 Definitions

4.3.1 Enforcement Measurement Elements means the performance measurements set forth in Exhibit B, attached hereto and incorporated herein by this reference.

4.3.2 Enforcement Measurement Benchmark means a competitive level of performance negotiated by BellSouth used to compare the performance of BellSouth and CLEC-1 where no analogous process, product or service is feasible. See Exhibit B.

4.3.3 Enforcement Measurement Compliance means comparing performance levels provided to BellSouth retail customers with performance levels provided by BellSouth to the CLEC customer, as set forth in Exhibit C, attached hereto and incorporated herein by this reference.

4.3.4 Test Statistic and Balancing Critical Value is the means by which enforcement will be determine using statistically valid equations. See Exhibit C.

4.3.5 Cell is the point (below the wire center level) at which like-to-like comparisons are made. For example, all BellSouth retail POTS services, for residential customers, requiring a dispatch in a particular wire center, at a particular point in time will be compared directly to CLEC-1 resold services for residential customers, requiring a dispatch, in the same wire center, at a particular point in time. When determining compliance, these cells can have a positive or negative value. See Exhibit C.

4.3.6 Affected Volume means that proportion of the total CLEC-1 volume or CLEC Aggregate volume for which remedies will be paid.

4.3.7 Parity Gap refers to the incremental departure from a compliant-level of service. (See Exhibit D). This is also referred to as “diff” in the Statistical paper (See Exhibit C).

4.3.8 Tier-1 Enforcement Mechanisms means self-executing liquidated damages paid directly to CLEC-1 when BellSouth delivers non-compliant performance of any one of the Enforcement Measurement Elements for any month as calculated by BellSouth.

4.3.9 Tier-2 Enforcement Mechanisms means Assessments paid directly to a state Public Service Commission (“Commission”) or its designee. Tier 2 Enforcement Mechanisms are triggered by three consecutive monthly failures in a quarter in which BellSouth performance is out of compliance or does not meet the benchmarks for the aggregate of all CLEC data as

calculated by BellSouth for a particular Enforcement Measurement Element.

4.3.10 Tier-3 Enforcement Mechanisms means the voluntary suspension of additional marketing and sales of long distance services triggered by excessive repeat failures of those specific submeasures as defined in Exhibit D attached hereto and incorporated herein by this reference.

4.4 Application

4.4.1 The application of the Tier-1, Tier-2, and Tier-3 Enforcement Mechanisms does not foreclose other non-contractual legal and regulatory claims and remedies available to CLEC-1.

4.4.2 Proof of damages resulting from BellSouth's failure to maintain Enforcement Measurement Compliance would be difficult to ascertain and, therefore, liquidated damages are a reasonable approximation of any contractual damage. Liquidated damages under this provision are not intended to be a penalty.

4.5 Methodology

4.5.1 Tier-1 Enforcement Mechanisms will be triggered by BellSouth's failure to achieve Enforcement Measurement Compliance or Enforcement Measurement Benchmarks for the State for a given Enforcement Measurement Element in a given month based upon a test statistic and balancing critical value calculated by BellSouth utilizing BellSouth generated data. The method of calculation is attached hereto as Exhibit D and incorporated herein by this reference.

4.5.1.1 Tier-1 Enforcement Mechanisms apply on a per transaction basis for each negative cell and will escalate based upon the number of consecutive months that BellSouth has reported non-compliance.

4.5.1.2 Fee Schedule for Tier-1 Enforcement Mechanisms is shown in Table-1 attached hereto as Exhibit E and incorporated herein by this reference. Failures beyond Month 6 (as set forth in Table 1) will be subject to Month 6 fees.

4.5.2 Tier-2 Enforcement Mechanisms will be triggered by BellSouth's failure to achieve Enforcement Measurement Compliance or Enforcement Measurement Benchmarks for the State in a given calendar quarter based upon a statistically valid equation calculated by BellSouth utilizing BellSouth generated data. The method of calculation is attached hereto as Exhibit D and incorporated herein by reference.

4.5.2.1 Tier- 2 Enforcement Mechanisms apply, for an aggregate of all CLEC data generated by BellSouth, on a per transaction basis for each negative cell for a particular Enforcement Measurement Element.

4.5.2.2 Fee Schedule for Total Quarterly Tier-2 Enforcement Mechanisms is show in Table-2 attached hereto as Exhibit E and incorporated herein by this reference.

4.5.3 Tier-3 Enforcement Mechanisms will be triggered by BellSouth's failure to achieve Enforcement Measurement Compliance or Enforcement Measurement Benchmarks for a State in a given calendar quarter. The method of calculation for specified submeasures is identical to the method of calculation for Tier-2 Enforcement Mechanisms as described above. The specific submeasures which are the mechanism for triggering and removing a Tier-3 Enforcement Mechanisms are described in more detail in Exhibit D attached hereto and incorporated herein by this reference.

4.6 Payment of Tier-1 and Tier-2 Amounts

4.6.1 If BellSouth performance triggers an obligation to pay Tier-1 Enforcement Mechanisms to CLEC-1 or an obligation to remit Tier-2 Enforcement Mechanisms to the Commission, BellSouth shall make payment in the required amount on or before the thirtieth (30th) day following the due date of the performance measurement report for the month in which the obligation arose.

4.6.2 For each day after the due date that BellSouth fails to pay CLEC-1 the required amount, BellSouth will pay interest to CLEC-1 at the maximum rate permitted by state law.

4.6.3 For each day after the due date that BellSouth fails to pay the Tier-2 Enforcement Mechanisms, BellSouth will pay the Commission an additional $1,000 per day.

4.6.4 If CLEC-1 disputes the amount paid to CLEC-1 for Tier-1 Enforcement Mechanisms, CLEC-1 shall submit a written claim to BellSouth within sixty (60) days after the date of the performance measurement report for which the obligation arose. BellSouth shall investigate all claims and provide CLEC-1 written findings within thirty (30) days after receipt of the claim. If BellSouth determines CLEC-1 is owed additional amounts, BellSouth shall pay CLEC-1 such additional amounts within thirty (30) days after its findings along with interest paid at the maximum rate permitted by law.

4.6.5 At the end of each calendar year, BellSouth will have its independent auditing and accounting firm certify that the results of all Tier-1 and Tier-2 Enforcement Mechanisms were paid and accounted for in accordance with Generally Accepted Account Principles (GAAP).

4.7 Limitations of Liability

4.7.1 BellSouth will not be responsible for CLEC-1 acts or omissions that cause performance measures to be missed or fail, including but not limited to accumulation and submission of orders at unreasonable quantities or times or failure to submit accurate orders or inquiries. BellSouth shall provide CLEC-1 with reasonable notice of such acts or omissions and provide CLEC-1 any such supporting documentation.

4.7.2 BellSouth shall not be obligated for Tier-1, Tier-2 or Tier 3 Enforcement Mechanisms for non-compliance with a performance measure if such non-compliance was the result of an act or omission by CLEC-1 that is in bad faith.

4.7.3 BellSouth shall not be obligated to pay Tier-1 Enforcement Mechanisms or Tier-2 Enforcement Mechanism for non-compliance with a performance measurement if such non-compliance was the result of any of the following: a Force Majeure event as set forth in the General Terms and Conditions of this Agreement; an act or omission by CLEC-1 that is contrary to any of its obligations under its Interconnection Agreement with BellSouth; an act or omission by CLEC-1 that is contrary to any of its obligations under the Act, Commission rule, or state law; an act or omission associated with third-party systems or equipment; or any occurrence that results from an incident reasonably related to the Y2K problem.

4.7.4 It is not the intent of the Parties that BellSouth be liable for both Tier-2 Enforcement Mechanisms and any other assessments or sanctions imposed by the Commission. CLEC-1 will not oppose any effort by BellSouth to set off Tier-2 Enforcement Mechanisms from any additional assessment imposed by the Commission.

4.7.5 Payment of any Tier-1 or Tier-2 Enforcement Mechanisms shall not be considered as an admission against interest or an admission of liability or culpability in any legal, regulatory or other proceeding relating to BellSouth's performance. The payment of any Tier-1 Enforcement Mechanisms to CLEC-1 shall release BellSouth for any liability associated with or related to the service performance measurement for the month for which the Enforcement Mechanisms was paid to CLEC-1.

4.7.6 CLEC-1 acknowledges and argues that the Enforcement Mechanisms contained in this attachment have been provided by BellSouth on a completely voluntary basis in order to maintain compliance between BellSouth and CLEC-1. Therefore, CLEC-1 may not use the existence of this section or any payments of any Tier-1 or Tier-2 Enforcement Mechanisms under this section as evidence that BellSouth has not complied with or has violated any state or federal law or regulation.

4.8 Enforcement Mechanism Caps

4.8.1 BellSouth's liability for the payment of Tier-1 and Tier-2 Enforcement Mechanisms shall be collectively capped at $625M per year for the entire BellSouth region as set forth below.

AL - $54M	MS - $44M
FL - $122M	NC - $77M
GA - $131M	SC - $47M
KY - $34M	TN - $57M
LA - $59M	
Regional Total - $625M	

4.8.2 If BellSouth's liability for the payment of Tier-1 and Tier-2 Enforcement Mechanisms exceed the caps referenced in this attachment, CLEC-1 may commence a proceeding with the Commission to demonstrate why BellSouth should pay any amount in excess of the cap. CLEC-1 shall have the burden of proof to demonstrate why, under the circumstances, BellSouth should have additional liability.

4.9 Dispute Resolution

4.9.1 Notwithstanding any other provision of this Agreement, any dispute regarding BellSouth's performance or obligations pursuant to this Attachment shall be resolved by the Commission.

EXHIBIT A

ORDERING

Report/Measurement:	
O-7. Speed of Answer in Ordering Center	
Definition:	
Measures the average time a customer is in queue.	
Exclusions:	
None	
Business Rules:	
The clock starts when the appropriate option is selected (i.e. 1 for Resale Consumer, 2 for Resale Multiline, and 3 for UNE-LNP, etc.) and the call enters the queue for that particular group in the LCSC. The clock stops when a BST service representative in the LCSC answers the call. The speed of answer is determined by measuring and accumulating the elapsed time from the entry of a CLEC call into the BellSouth automatic call distributor (ACD) until the a service representative in BSTs Local Carrier Service Center (LCSC) answers the CLEC call.	
Calculation:	
(Total time in seconds to reach the LCSC) / (Total Number of Calls) in the Reporting Period.	
Report Structure:	
• CLEC Aggregate • BST Aggregate (Combination of Residence Service Center and Business Service Center data under development)	
Level of Disaggregation:	
• CLEC Aggregate • BST Aggregate (Combination of Residence Service Center and Business Service Center data under development)	
Data Retained Relating to CLEC Experience:	**Data Retained Relating to BST Performance:**
• Mechanized tracking through LCSC Automatic Call Distributor	• Mechanized tracking through BST Retail center support systems
Retail Analog/Benchmark:	
For CLEC, Speed of Answer in Ordering Center (LCSC) is comparable to Speed of Answer in BST Business Offices. See Appendix D	

Revision Date: 02/16/00 (lg)

ORDERING – (LNP)

Report/Measurement:

LNP-8. Percent Rejected Service Requests

Definition:

Percent Rejected Service Request is the percent of total Local Service Requests (LSRs) which are rejected due to error or omission. An LSR is considered valid when it is electronically submitted by the CLEC and passes LNP Gateway edit checks to insure the data received is correctly formatted and complete, i.e., fatal rejects are excluded.

Exclusions:

- Service Requests canceled by the CLEC
- Fatal Rejects
- Order Activities of BST or the CLEC associated with internal or administrative use of local services (Record Orders, Test Orders, etc.) where identifiable.

Business Rules:

An LSR is considered "rejected" when it is submitted electronically but does not pass edit checks in the ordering systems (EDI, TAG, LNP Gateway, LAUTO) and is returned to the CLEC without manual intervention.

Fully Mechanized: There are two types of "Rejects" in the Fully Mechanized category:

- A Fatal Reject occurs when a CLEC attempts to electronically submit an LSR (via EDI or TAG) but required fields are not populated correctly and the request is returned to the CLEC.
  Fatal rejects are reported in a separate column, and for informational purposes ONLY. They are not considered in the calculation of the percent of total LSRs rejected or the total number of rejected LSRs.
- An Auto Clarification is a valid LSR which is electronically submitted (via EDI or TAG), but is rejected from LAUTO because it does not pass further edit checks for order accuracy. Auto Clarifications are returned without manual intervention.

Partially Mechanized: A valid LSR which is electronically submitted (via EDI or TAG), but cannot be processed electronically due to a CLEC error and "falls out" for manual handling. It is then put into "clarification", and sent back to the CLEC.

Total Mechanized: Combination of Fully Mechanized and Partially Mechanized rejects.

Calculation

Percent Rejected Service Requests:
[(Number of Service Requests Rejected in the Reporting Period) / (Number of Service Requests Received in the Reporting Period)] x 100

Report Structure:

- Fully Mechanized, Partially Mechanized, Total Mechanized
- CLEC Specific
- CLEC Aggregate

Level of Disaggregation:

- Product Reporting Levels
  - LNP
  - UNE Loop with LNP
- Geographic Scope
  - .State, Region

Retail Analog/Benchmark:

See Appendix D

Revision Date: 02/16/00 (lg)

ORDERING – (LNP)

Report/Measurement:

LNP-9. Reject Interval Distribution & Average Reject Interval

Definition:

Reject Interval is the average reject time from receipt of an LSR to the distribution of a Reject. An LSR is considered valid when it is electronically submitted by the CLEC and passes LNP Gateway edit checks to insure the data received is correctly formatted and complete, i.e., fatal rejects are excluded.

Exclusions:

- Service Requests canceled by CLEC
- Fatal Rejects
- Order Activities of BST or the CLEC associated with internal or administrative use of local services (Record Orders, Test Orders, etc.) where identifiable.

Business Rules:

The Reject interval is determined for each rejected LSR processed during the reporting period. The Reject interval is the elapsed time from when BST receives LSR until that LSR is rejected back to the CLEC. Elapsed time for each LSR is accumulated for each reporting dimension. The accumulated time for each reporting dimension is then divided by the associated total number of rejected LSRs to produce the reject interval distribution.

An LSR is considered "rejected" when it is submitted electronically but does not pass edit checks in the ordering systems (EDI, TAG, LNP Gateway, LAUTO) and is returned to the CLEC without manual intervention.

Fully Mechanized: There are two types of "Rejects" in the Fully Mechanized category:

- A Fatal Reject occurs when a CLEC attempts to electronically submit an LSR but required fields are not populated correctly and the request is returned to the CLEC.
  Fatal rejects are reported in a separate column, and for informational purposes ONLY. They are not considered in the calculation of the percent of total LSRs rejected or the number of rejected LSRs.
- An Auto Clarification is a valid LSR which is electronically submitted (via EDI or TAG), but rejected from LAUTO because it does not pass further edit checks for order accuracy. Auto Clarifications are returned without manual intervention.

Partially Mechanized: A valid LSR which is electronically submitted (via EDI or TAG), but cannot be processed electronically due to a CLEC error and "falls out" for manual handling. It is then put into "clarification", and sent back to the CLEC.

Total Mechanized: Combination of Fully Mechanized and Partially Mechanized rejects.

Calculation:

Average Reject Interval:

Σ[(Date & Time of Service Request Rejection) - (Date & Time of Service Request Receipt)] / (Total Number of Service Requests Rejected in Reporting Period)

Reject Interval Distribution:

[Σ (Service Requests Rejected in "X" minutes/hours) / (Total Number of Service Requests Rejected in Reporting Period)] X 100

Report Structure:

- Fully Mechanized, Partially Mechanized, Total Mechanized
- CLEC Specific
- CLEC Aggregate

ORDERING – (LNP) - Reject Interval Distribution & Average Reject Interval – Continued)

Level of Disaggregation:

• Reported in intervals = 0 - 4 minutes, 4 - 8 minutes, 8 - 12 minutes, 12 - 60 minutes, 0 - 1 hours, 1 - 8 hours, 8 - 24 hours, >24 hours
• Product Reporting Levels
  ➢ LNP
  ➢ UNE Loop with LNP
• Geographic Scope
  ➢ .State, Region
• Average Interval in Days

Retail Analog/Benchmark:
See Appendix D

Revision Date: 02/16/00 (lg)

ORDERING – (LNP)

Report/Measurement:

LNP-10. Firm Order Confirmation Timeliness Interval Distribution & Firm Order Confirmation Average Interval

Definition:

Interval for Return of a Firm Order Confirmation (FOC Interval) is the average response time from receipt of a valid LSR to distribution of a firm order confirmation.

Exclusions:

- Rejected LSRs (Clarifications or Fatal Rejects)
- Order Activities of BST or the CLEC associated with internal or administrative use of local services (Record Orders, Test Orders, etc.) where identifiable.

Business Rules:

The Firm Order Confirmation interval is determined for each FOC'd LSR processed during the reporting period. The Firm Order Confirmation interval is the elapsed time from when BST receives an LSR until that LSR is confirmed back to the CLEC. Elapsed time for each LSR is accumulated for each reporting dimension. The accumulated time for each reporting dimension is then divided by the associated total number of orders completed to produce the Firm Order Confirmation timeliness interval distribution.

- **Mechanized** - The elapsed time from receipt of a valid LSR until the LSR is processed and appropriate service orders are generated in SOCS without manual intervention.
- **Partially Mechanized** - The elapsed time from receipt of an electronically submitted LSR which falls out for manual handling by the LCSC personnel until appropriate service orders are issued by a BST service representative via Direct Order Entry (DOE) or Service Order Negotiation Generation System (SONGS).
- **Total Mechanized** - Combination of Fully Mechanized and Partially Mechanized FOCs.

Calculation:

Average FOC Interval:

Σ [(Date & Time of Firm Order Confirmation) - (Date & Time of Service Request Receipt)] / (Total number of Service Requests Confirmed in the Reporting Period)

FOC Interval Distribution:

Σ[(Service Requests Confirmed in "X" minutes/hours in the Reporting Period) / (Total Service Requests Confirmed in the Reporting Period)] X 100

Report Structure:

- Fully Mechanized, Partially Mechanized, Total Mechanized
- CLEC Specific
- CLEC Aggregate

Level of Disaggregation:

- Reported in intervals = 0 - 15 minutes, 15 - 30 minutes, 30 - 45 minutes, 45 - 60 minutes, 90 - 120 minutes, 120 - 240 minutes, 4 - 8 hours, 8 - 12 hours, 12 - 16 hours, 16 - 20 hours, 20 - 24 hours, 24 - 48 hours, >48 hours
- Product Reporting Levels
  - LNP
  - UNE Loop with LNP
- Geographic Scope
  - .State, Region

Retail Analog/Benchmark:

See Appendix D

Revision Date: 02/16/00 (lg)

Provisioning Disaggregation

Product Reporting Levels

- Resale and Retail
  - Pots – Residence
  - Pots – Business
  - Design
  - PBX (Louisiana SQM)
  - CENTREX (Louisiana SQM)
  - ISDN (Louisiana SQM) (**NOTE**: ISDN included in POTS for Georgia Only)
  - ESSX (Louisiana SQM)

- Unbundled Network Elements
  - UNE Design
  - UNE Non – Design
  - UNE 2 Wire Loop (Louisiana SQM)
  - UNE Loop Other (Louisiana SQM)
  - Unbundled Ports (Louisiana SQM)

- Trunks
  - Local Interconnection Trunks

- Geographic Scope
  - State, Region and further geographic disaggregation as required by State Commission Order (e.g. Metropolitan Service Area – MSA)

The following measure is the exception for all states:
Coordinated Customer Conversion

Which is disaggregated as follows:
UNE LOOPS with INP
UNE LOOPS without INP

PROVISIONING

Report/Measurement:
P-1. Mean Held Order Interval & Distribution Intervals
Definition:
When delays occur in completing CLEC orders, the average period that CLEC orders are held for BST reasons, pending a delayed completion, should be no worse for the CLEC when compared to BST delayed orders.
Exclusions:
Order Activities of BST associated with internal or administrative use of local services.
Business Rules:
Mean Held Order Interval: This metric is computed at the close of each report period. The held order interval is established by first identifying all orders, at the close of the reporting interval, that both have not been reported as completed in SOCS and have passed the currently committed due date for the order. For each such order, the number of calendar days between the committed due date and the close of the reporting period is established and represents the held order interval for that particular order. The held order interval is accumulated by the standard groupings, unless otherwise noted, and the reason for the order being held. The total number of days accumulated in a category is then divided by the number of held orders within the same category to produce the mean held order interval. The interval is by calendar days with no exclusions for Holidays or Sundays. CLEC Specific reporting is by type of held order (facilities, equipment, other), total number of orders held, and the total and average days. **Held Order Distribution Interval:** This measure provides data to report total days held and identifies these in categories of >15 days and > 90 days. (orders counted in >90 days are also included in >15 days).
Calculation:
Mean Held Order Interval: Σ(Reporting Period Close Date – Committed Order Due Date) / (Number of Orders Pending and Past The Committed Due Date) for all orders pending and past the committed due date. **Held Order Distribution Interval:** (# of Orders Held for ≥90 days) / (Total # of Orders Pending But Not Completed) X 100 (# of Orders Held for ≥15 days) / (Total # of Orders Pending But Not Completed) X 100
Report Structure:
• CLEC Specific • CLEC Aggregate • BST Aggregate
Level of Disaggregation:
Circuit breakout < 10, > = 10

PROVISIONING - Mean Held Order Interval & Distribution Intervals – Continued)

Data Retained Relating to CLEC Experience	Data Retained Relating to BST Experience
• Report Month • CLEC Order Number and PON (PON) • Order Submission Date (TICKET_ID) • Committed Due Date (DD) • Service Type(CLASS_SVC_DESC) • Hold Reason • Total line/circuit count • Geographic Scope **NOTE:** Code in parentheses is the corresponding header found in the raw data file.	• Report Month • BST Order Number • Order Submission Date • Committed Due Date • Service Type • Hold Reason • Total line/circuit count • Geographic Scope
Retail Analog/Benchmark:	
CLEC Residence Resale / BST Residence Retail CLEC Business Resale / BST Business Retail CLEC Non-UNE Design / BST Design Interconnection Trunks-CLEC / Interconnection Trunks –BST UNEs-(See Appendix D)	

Revision Date: 02/24/00 (taf)

PROVISIONING

Report/Measurement:	
P-2. Average Jeopardy Notice Interval & Percentage of Orders Given Jeopardy Notices	
Definition:	
When BST can determine in advance that a committed due date is in jeopardy, it will provide advance notice to the CLEC.	
Exclusions:	
• Orders held for CLEC end user reasons • Orders submitted to BST through non-mechanized methods	
Business Rules:	
When BST can determine in advance that a committed due date is in jeopardy it will provide advance notice to the CLEC. The number of committed orders in a report period is the number of orders that have a due date in the reporting period.	
Calculation:	
Average Jeopardy Interval = Σ [(Date and Time of Scheduled Due Date on Service Order) - (Date and Time of Jeopardy Notice)]/[Number of Orders Notified of Jeopardy in Reporting Period). **Percent of Orders Given Jeopardy Notice** = Σ [(Number of Orders Given Jeopardy Notices in Reporting Period) / (Number of Orders Confirmed (due) in Reporting Period)	
Report Structure:	
• CLEC Specific • CLEC Aggregate • BST Aggregate	
Data Retained Relating to CLEC Experience	**Data Retained Relating to BST Experience**
• Report Month • CLEC Order Number and PON • Date and Time Jeopardy Notice sent • Committed Due Date • Service Type **NOTE:** Code in parentheses is the corresponding header found in the raw data file.	• Report Month • BST Order Number • Date and Time Jeopardy Notice sent • Committed Due Date • Service type
Retail Analog/Benchmark:	
95% > = 24 hours	

Revision Date: 01/05/00 (taf)

PROVISIONING

Report/Measurement:

P-3. Percent Missed Installation Appointments

Definition:

"Percent missed installation appointments" monitors the reliability of BST commitments with respect to committed due dates to assure that CLECs can reliably quote expected due dates to their retail customer as compared to BST.

Exclusions:

- Canceled Service Orders
- Order Activities of BST or the CLEC associated with internal or administrative use of local services (Record Orders, Test Orders, etc.)
- Disconnect (D) & From (F) orders
- End User Misses on Interconnection Trunks

Business Rules:

Percent Missed Installation Appointments is the percentage of total orders processed for which BST is unable to complete the service orders on the confirmed due dates. Missed Appointments caused by end-user reasons will be included and reported separately. A business day is any time period within the same date frame, which means there cannot be a cutoff time for commitments as certain types of orders are requested to be worked after standard business hours. Also, during Daylight Savings Time, field technicians are scheduled until 9PM in some areas and the customer is offered a greater range of intervals from which to select.

Calculation:

Percent Missed Installation Appointments = Σ (Number of Orders Not Complete by Committed Due Date in Reporting Period) / (Number of Orders Confirmed in Reporting Period) X 100

Report Structure:

- CLEC Specific
- CLEC Aggregate
- BST Aggregate

Report explanation: The difference between End User MA and Total MA is the result of BST caused misses. Here, Total MA is the total % of orders missed either by BST or CLEC end user. The End User MA represents the percentage of orders missed by the CLEC or their end user.

Level of Disaggregation:

- Reported in categories of <10 lines/circuits; > = 10 lines/circuits
- Dispatch/No Dispatch

Data Retained Relating to CLEC Experience	Data Retained Relating to BST Experience
• Report Month • CLEC Order Number and PON (PON) • Committed Due Date (DD) • Completion Date (CMPLTN DD) • Status Type • Status Notice Date • Standard Order Activity • Geographic Scope **NOTE:** Code in parentheses is the corresponding header found in the raw data file.	• Report Month • BST Order Number • Committed Due Date (DD) • Completion Date (CMPLTN DD) • Status Type • Status Notice Date • Standard Order Activity • Geographic Scope

Retail Analog/Benchmark:

CLEC Residence Resale / BST Residence Retail
CLEC Business Resale / BST Business Retail
CLEC Non-UNE Design / BST Design
Interconnection Trunks-CLEC / Interconnection Trunks –BST
UNEs-(See Appendix D)

Revision Date: 02/28/00 (taf)

PROVISIONING

Report/Measurement :

P-4. Average Completion Interval (OCI) & Order Completion Interval Distribution

Definition:

The "average completion interval" measure monitors the interval of time it takes BST to provide service for the CLEC or its' own customers. The "Order Completion Interval Distribution" provides the percentage of orders completed within certain time periods.

Exclusions:

- Canceled Service Orders
- Order Activities of BST or the CLEC associated with internal or administrative use of local services (Record Orders, Test Orders, etc.)
- D (Disconnect) and F (From) orders. (From is disconnect side of a move order when the customer moves to a new address).
- "L" Appointment coded orders (where the customer has requested a later than offered interval)

Business Rules:

The actual completion interval is determined for each order processed during the reporting period. The completion interval is the elapsed time from when BST issues a FOC or SOCS date time stamp receipt of an order from the CLEC to BST's actual order completion date. The clock starts when a valid order number is assigned by SOCS and stops when the technician or system completes the order in SOCS. Elapsed time for each order is accumulated for each reporting dimension. The accumulated time for each reporting dimension is then divided by the associated total number of orders completed.

The interval breakout for UNE and Design is: 0-5 = 0-4.99, 5-10 = 5-9.99, 10-15 = 10-14.99, 15-20 = 15-19.99 20-25 = 20-24.99, 25-30 = 25-29.99, >=30 = 30 and greater.

Calculation :

Average Completion Interval:

Σ [(Completion Date & Time) - (Order Issue Date & Time)] / Σ (Count of Orders Completed in Reporting period)

Order Completion Interval Distribution:

Σ (Service Orders Completed in "X" days) / (Total Service Orders Completed in Reporting Period) X 100

Report Structure:

- CLEC Specific
- CLEC Aggregate
- BST Aggregate

Level of Disaggregation:

- ISDN Orders included in Non Design - GA Only
- Dispatch/No Dispatch categories applicable to all levels except trunks.
- Residence & Business reported in day intervals = 0,1,2,3,4, 5, 5+
- UNE and Design reported in day intervals = 0-5, 5-10, 10-15, 15-20, 20-25, 25-30, >=30
- All Levels are reported <10 line/circuits; >=10 line/circuits

PROVISIONING –
(Average Completion Interval (OCI) & Order Completion Interval Distribution – Continued)

Data Retained Relating to CLEC Experience	Data Retained Relating to BST Experience
• Report Month • CLEC Company Name • Order Number (PON) • Submission Date & Time (TICKET_ID) • Completion Date (CMPLTN_DT) • Service Type (CLASS_SVC_DESC) • Geographic Scope **NOTE:** Code in parentheses is the corresponding header found in the raw data file.	• Report Month • BST Order Number • Order Submission Date & Time • Order Completion Date & Time • Service Type • Geographic Scope
Retail Analog/Benchmark	
CLEC Residence Resale / BST Residence Retail CLEC Business Resale / BST Business Retail CLEC Non-UNE Design / BST Design Interconnection Trunks-CLEC / Interconnection Trunks-BST UNEs-(See Appendix D)	

Revision Date: 02/28/00 (taf)

PROVISIONING

Report/Measurement:

P-5. Average Completion Notice Interval

Definition:

The Completion Notice Interval is the elapsed time between the BST reported completion of work and the issuance of a valid completion notice to the CLEC**.**

Exclusions:

- Non-mechanized Orders
- Cancelled Service Orders
- Order Activities of BST associated with internal or administrative use of local services
- D & F orders

Business Rules:

Measurement of interval of completion date and time by a field technician on dispatched orders, and 5PM start time on the due date for non-dispatched orders; to the release of a notice to the CLEC/BST of the completion status. The field technician notifies the CLEC the work was complete and then he enters the completion time stamp information in his computer. This information switches through to the SOCS systems either completing the order or rejecting the order to the Work Management Center (WMC). If the completion is rejected, it is manually corrected and then completed by the WMC. The notice is returned on each individual order submitted and as the notice is sent electronically, it can only be switched to those orders that were submitted by the CLEC electronically. The start time is the completion stamp either by the field technician or the 5PM due date stamp; the end time is the time stamp the notice was submitted to the CLEC/BST system.

Calculation:

Σ (Date and Time of Notice of Completion) – (Date and Time of Work Completion) / (Number of Orders Completed in Reporting Period)

Report Structure:

- CLEC Specific
- CLEC Aggregate
- BST Aggregate

Level of Disaggregation:

- Reporting intervals in Hours: 0-1, 1-2, 2-4, 4-8, 8-12, 12-24, > 24, plus Overall Average Hour Interval
- Reported in categories of <10 line/circuits; >= 10 line/circuits

Data Retained Relating to CLEC Experience	**Data Retained Relating to BST Experience**
• Report Month • CLEC Order Number • Work Completion Date • Work Completion Time • Completion Notice Availability Date • Completion Notice Availability Time • Service Type • Activity Type • Geographic Scope **NOTE:** Code in parentheses is the corresponding header found in the raw data file.	• Report Month • BST Order Number • Work Completion Date • Work Completion Time • Completion Notice Availability Date • Completion Notice Availability Time • Service Type • Activity Type • Geographic Scope **NOTE:** Code in parentheses is the corresponding header found in the raw data file.

Retail Analog/Benchmark:

CLEC Residence Resale / BST Residence Retail
CLEC Business Resale / BST Business Retail
CLEC Non-UNE Design / BST Design
Interconnection Trunks-CLEC / Interconnection Trunks-BST
UNEs – (See Appendix D)

Revision Date 02/24/00 (taf)

PROVISIONING

Report/Measurement:	
P-6. Coordinated Customer Conversions	
Definition:	
This category measures the average time it takes BST to disconnect an unbundled loop from the BST switch and cross connect it to a CLEC's equipment. This measurement applies to service orders with and without INP, and where the CLEC has requested BST to provide a coordinated cutover.	
Exclusions:	
• Any order canceled by the CLEC will be excluded from this measurement. • Delays due to CLEC following disconnection of the unbundled loop • Unbundled Loops where there is no existing subscriber loop and loops where coordination in not requested.	
Business Rules:	
Where the service order includes INP, the interval includes the total time for the cutover including the translation time to place the line back in service on the ported line. The interval is calculated for the entire cutover time for the service order and then divided by items worked in that time to give the average per item interval for each service order.	
Calculation:	
Σ [(Completion Date and Time for Cross Connection of an Coordinated Unbundled Loop)- (Disconnection Date and Time of an Coordinated Unbundled Loop)] / Total Number of Unbundled Loop with Coordinated Conversions (items) for the reporting period.	
Report Structure:	
• CLEC Specific • CLEC Aggregate	
Level of Disaggregation:	
Reported in intervals <=5 minutes; >5,< =15 minutes; >15 minutes, plus Overall Average interval	
Data Retained Relating to CLEC Experience	**Data Retained Relating to BST Experience**
• Report Month • CLEC Order Number • Committed Due Date (DD) • Service Type (CLASS_SVC_DESC) • Cutover Start Time • Cutover Completion time • Portability start and completion times (INP orders) • Total Conversions (Items) **NOTE:** Code in parentheses is the corresponding header found in the raw data file.	• No BST Analog Exists
Retail Analog/Benchmark:	
There is no retail analog for this measurement because it measures cutting loops to the CLEC. Benchmark – See Appendix D	

Revision Date: 02/28/00 (taf)

PROVISIONING

Report/Measurement:

P-7. % Provisioning Troubles within 30 days of Service Order Activity

Definition:

Percent Provisioning Troubles within 30 days of Installation measures the quality and accuracy of installation activities.

Exclusions:

- Canceled Service Orders
- Order Activities of BST or the CLEC associated with internal or administrative use of local services (R Orders, Test Orders, etc.)
- D & F orders

Business Rules:

Measures the quality and accuracy of completed orders. The first trouble report from a service order after completion is counted in this measure. Subsequent trouble reports are measured in Repeat Report Rate. Reports are calculated searching in the prior report period for completed service orders and following 30 days after completion for a trouble report.

D & F orders are excluded as there is no subsequent activity following a disconnect.

Calculation:

% Provisioning Troubles within 30 days of Service Order Activity = Σ (Trouble reports on all completed orders ≤ 30 days following service order(s) completion) / (All Service Orders completed in the report calendar month) X 100

Report Structure:

- CLEC Specific
- CLEC Aggregate
- BST Aggregate

Level of Disaggregation:

- Reported in categories of <10 line/circuits; > = 10 line/circuits
- Dispatch / No Dispatch

Data Retained Relating to CLEC Experience	Data Retained Relating to BST Experience
• Report Month • CLEC Order Number and PON • Order Submission Date(TICKET_ID) • Order Submission Time (TICKET_ID) • Status Type • Status Notice Date • Standard Order Activity • Geographic Scope **NOTE:** Code in parentheses is the corresponding header found in the raw data file.	• Report Month • BST Order Number • Order Submission Date • Order Submission Time • Status Type • Status Notice Date • Standard Order Activity • Geographic Scope

Retail Analog/Benchmark:

CLEC Residence Resale / BST Residence Retail
CLEC Business Resale / BST Business Retail
CLEC Non-UNE Design / BST Design
Interconnection Trunks-CLEC / Interconnection Trunks –BST
UNEs-(See Appendix D)

Revision Date: 02/28/00 (taf)

PROVISIONING

Report/Measurement :

P-8. Total Service Order Cycle Time (TSOCT)

Definition:

This report measures the total service order cycle time from receipt of a valid service order request to the completion of the service order.

Exclusions:

- Canceled Service Orders
- Order Activities of BST or the CLEC associated with internal or administrative use of local services (Record Orders, Test Orders, etc.)
- D (Disconnect) and F (From) orders. (From is disconnect side of a move order when the customer moves to a new address).
- "L" Appointment coded orders (where the customer has requested a later than offered interval)
- Orders with CLEC/Subscriber caused delays or CLEC/Subscriber requested due date changes.

Business Rules:

The interval is determined for each order processed during the reporting period. This measurement combines two reports: FOC (Firm Order Confirmation) with Average Order Completion Interval.

This interval starts with the receipt of a valid service order request and stops when the technician or system completes the order in SOCS. Elapsed time for each order is accumulated for each reporting dimension. The accumulated time for each reporting dimension is then divided by the associated total number of orders completed.

Calculation :

Total Service Order Cycle Time
Σ(Date and Time of Service Request Receipt) – (Completion Date and Time of Service Order) (SOCS HIST-CD DATE) / (Count of Orders Completed in Reporting Period)

Report Structure:

- CLEC Specific
- CLEC Aggregate
- BST Aggregate

Level of Disaggregation:

- Reported in categories of < 10 line/circuits; > = 10 line/circuits
- Dispatch/No Dispatch categories applicable to all levels except trunks.
- Intervals 0-5, 5-10, 10-15, 15-20, 20-25, 25-30, > = 30 Days

Data Retained Relating to CLEC Experience	Data Retained Relating to BST Experience
• Report Month • Interval for FOC • CLEC Company Name • Order Number (PON) • Submission Date & Time (TICKET_ID) • Completion Date (CMPLTN_DT) • Service Type (CLASS_SVC_DESC) • Geographic Scope **NOTE:** Code in parentheses is the corresponding header found in the raw data file.	• Report Month • BST Order Number • Order Submission Date & Time • Order Completion Date & Time • Service Type • Geographic Scope

Retail Analog/Benchmark

See Appendix D

Revision Date: 02/28/00 (taf)

PROVISIONING

Report/Measurement:	
P-9. Service Order Accuracy GEORGIA ONLY	
Definition:	
The "service order accuracy" measurement measures the accuracy and completeness of BST service orders by comparing what was ordered and what was completed.	
Exclusions:	
• Cancelled Service Orders • Order Activities of BST associated with internal or administrative use of local services • & F orders	
Business Rules:	
A manual sampling of service orders, completed during a monthly reporting period, is compared to the original account profile and the order that the CLEC sent to BST. An order is "completed without error" if all service attributes and account detail changes (as determined by comparing the original order) completely and accurately reflect the activity specified on the original order and any supplemental CLEC order.	
Calculation:	
Percent Service Order Accuracy = Σ (Orders Completed without Error) / Σ (Orders Completed in Reporting Period) x 100	
Report Structure:	
CLEC Aggregate	
Level of Disaggregation:	
• Reported in categories of <10 line/circuits; > = 10 line/circuits • Dispatch / No Dispatch	
Data Retained Relating to CLEC Experience	**Data Retained Relating to BST Experience**
• Report Month • CLEC Order Number and PON • Local Service Request (LSR) • Order Submission Date • Committed Due Date • Service Type • Standard Order Activity **NOTE:** Code in parentheses is the corresponding header found in the raw data file.	• Being investigated at this time
Retail Analog/Benchmark: (Under Investigation)	

Revision Date: 01/05/00 (taf)

PROVISIONING

Report/Measurement:

LNP – 10. Percent Missed Installation Appointments

Definition:

Percent Missed Installation Appointments monitors the reliability of BST commitments with respect to committed due dates to assure that CLECs can reliably quote expected due dates to their retail customer as compared to BST.

Exclusions:

- Canceled Service Orders
- Order Activities of BST or the CLEC associated with internal or administrative use of local services (Record Orders, Test Orders, etc.) where identifiable.

Business Rules:

Percent Missed Installation Appointments (PMI) is the percentage of total orders processed for which BST is unable to complete the service orders on the committed due dates. Missed Appointments caused by end-user reasons will be included and reported in a separate category. A business day is any time period within the same date frame, which means there cannot be a cutoff time for commitments as certain types of orders are requested to be worked after standard business hours. Also, during Daylight Savings Time, field technicians are scheduled until 9PM in some areas and the customer is offered a greater range of intervals from which to select.

Calculation:

Percent Missed Installation Appointments:
[(Number of Orders Not Completed by Committed Due Date in Reporting Period) / (Number of Orders Completed in Reporting Period)] X 100

Report Structure:

- Mechanized (service orders generated by LSRs submitted via EDI or TAG)
- CLEC Specific
- CLEC Aggregate

Report explanation: Total Missed Appointments is the total % of orders missed either by BST or the CLEC end user. End User MA represents the percentage of orders missed by the CLEC end user. The difference between End User Missed Appointments and Total Missed Appointments is the result of BST caused misses.

Level of Disaggregation:

- Product Reporting Levels
  - LNP
  - UNE Loop Associated w/LNP
- Geographic Scope
  - State, Region

Retail Analog/Benchmark:

See Appendix D

Revision Date: 02/16/00 (taf)

PROVISIONING – (LNP)

Report/Measurement :
LNP-11. Average Disconnect Timeliness Interval & Disconnect Timeliness Interval Distribution
Definition:
Disconnect Timeliness is defined as the interval between the time the LNP Gateway receives the 'Number Ported' message from NPAC (signifying the CLEC 'Activate') until the time that the Disconnect service order for an LSR is completed in SOCS. This interval effectively measures BST responsiveness by isolating it from impacts that are caused by CLEC related activities.
Exclusions:
• Canceled Service Orders • Order Activities of BST or the CLEC associated with internal or administrative use of local services (Record Orders, Test Orders, etc.) where identifiable.
Business Rules:
The Disconnect Timeliness interval is determined for the last Disconnect service order processed on an LSR during the reporting period. The Disconnect Timeliness interval is the elapsed time from when BST receives the last 'Number Ported' message for an LSR from NPAC (signifying the CLEC 'Activate') until the last Disconnect service order is completed in SOCS. Elapsed time for each order is accumulated for each reporting dimension. The accumulated time for each reporting dimension is then divided by the total number of selected disconnect orders which have been completed.
Calculation :
Average Disconnect Timeliness Interval: Σ[(Disconnect Service Order Completion Date & Time) - ('Number Ported' Message Received Date & Time)] / Σ (Total Number of Disconnect Service Orders Completed in Reporting Period) **Disconnect Timeliness Interval Distribution:** [Σ (Disconnect Service Orders Completed in "X" days) / (Total Disconnect Service Orders Completed in Reporting Period)] X 100
Report Structure:
• Mechanized (service orders generated by LSRs submitted via EDI or TAG) • CLEC Specific • CLEC Aggregate
Level of Disaggregation:
• Reported in day intervals = 0,1,2,3,4, 5, >5 days • Product Reporting Levels ➢LNP • Geographic Scope ➢State, Region
Retail Analog/Benchmark:
See Appendix D

Revision Date: 02/16/00 (taf)

PROVISIONING

Report/Measurement :

LNP-12. Total Service Order Cycle Time

Definition:

Total Service Order Cycle Time measures the interval from receipt of a valid service order request to the completion of the final service order associated with that service request.

Exclusions:

- Canceled Service Orders
- Order Activities of BST or the CLEC associated with internal or administrative use of local services (Record Orders, Test Orders, etc.) where identifiable
- "L" appointment coded orders (indicating the customer has requested a later than offered interval)
- "S" missed appointment coded orders (indicating subscriber missed reasons), except for "SP" codes (indicating subscriber prior due date requested).

Business Rules:

The interval is determined for each service request processed during the reporting period. This measurement combines two reports: FOC (Firm Order Confirmation) with Average Order Completion Interval.

This interval starts with the receipt of a valid service request and stops when the technician or system completes all the related service orders for the LSR in SOCS. Elapsed time for each service request is accumulated for each reporting dimension. The accumulated time for each reporting dimension is then divided by the associated total number of service requests completed to produce the total service order cycle time.

Calculation :

Average Total Service Order Cycle Time:

Σ[(Service Order Completion Date & Time) - (Service Request Receipt Date & Time)] / Σ (Total Number Service Requests Completed in Reporting Period)

Total Service Order Cycle Time Interval Distribution:

[Σ (Total Number of Service Requests Completed in "X" minutes/hours) / (Total Number of Service Requests Received in Reporting Period)] X 100

Report Structure:

- Mechanized (service orders generated by LSRs submitted via EDI or TAG)
- CLEC Specific
- CLEC Aggregate
- "W" Appointment Code Only (Company Offered)

Level of Disaggregation:

- Reported in day intervals 0 - 5, 5 - 10, 10 - 15, 15 - 20, 20 - 25, 25 - 30, >30 days
- Product Reporting Levels
  - LNP
  - UNE Loop with LNP
- Geographic Scope
  - State, Region

Retail Analog/Benchmark:

See Appendix D

Revision Date: 02/16/00 (taf)

Maintenance and Repair Level of Disaggregation

Product Reporting Levels

- Resale / Retail
  - Pots – Residence
  - Pots – Business
  - PBX (Louisiana SQM)
  - ESSX (Louisiana SQM)
  - CENTREX (Louisiana SQM)
  - ISDN (Louisiana SQM) (**NOTE**: ISDN Troubles included in Non-Design Georgia Only)
  - Design

- Unbundled Network Elements
  - UNE Design
  - UNE Non – Design
  - UNE 2 Wire Loop (Louisiana SQM)
  - UNE Loop Other (Louisiana SQM)
  - Unbundled Ports (Louisiana SQM)
  - UNE Other Non – Design (Louisiana SQM)

- Trunks
  - Local Interconnection Trunks

- Dispatch/No Dispatch categories applicable to all product levels

- Geographic Scope
  - State, Region and further geographic disaggregation as required by State Commission Order (e.g. Metropolitan Service Area – MSA)

MAINTENANCE & REPAIR

Report/Measurement:

M&R-1. Missed Repair Appointments

Definition:

The percent of trouble reports not cleared by the committed date and time.

Exclusions:

- Trouble tickets canceled at the CLEC request.
- BST trouble reports associated with internal or administrative service.
- Customer Provided Equipment (CPE) troubles or CLEC Equipment Trouble.

Business Rules:

The negotiated commitment date and time is established when the repair report is received. The cleared time is the date and time that BST personnel clear the trouble and closes the trouble report in his Computer Access Terminal (CAT) or workstation. If this is after the Commitment time, the report is flagged as a "Missed Commitment" or a missed repair appointment. When the data for this measure is collected for BST and a CLEC, it can be used to compare the percentage of the time repair appointments are missed due to BST reasons. Note: Appointment intervals vary with force availability in the POTS environment. Specials and Trunk intervals are standard interval appointments of no greater than 24 hours.

Calculation:

Percentage of Missed Repair Appointments = Σ (Count of Customer Troubles Not Cleared by the Quoted Commitment Date and Time) / Σ (Total Trouble reports closed in Reporting Period) X 100

Report Structure:

- CLEC Specific
- CLEC Aggregate
- BST Aggregate

Data Retained Relating to CLEC Experience	Data Retained Relating to BST Experience
• Report Month • CLEC Company Name • Submission Date & Time (TICKET_ID) • Completion Date (CMPLTN_DT) • Service Type (CLASS_SVC_DESC) • Disposition and Cause (CAUSE_CD & CAUSE_DESC) • Geographic Scope **NOTE:** Code in parentheses is the corresponding header found in the raw data file.	• Report Month • BST Company Code • Submission Date & Time • Completion Date • Service Type • Disposition and Cause (Non-Design /Non-Special Only) • Trouble Code (Design and Trunking Services) • Geographic Scope

Retail Analog/Benchmark

CLEC Residence-Resale / BST Residence-Retail
CLEC Business-Resale / BST Business-Retail
CLEC Design-Resale / BST Design-Retail
CLEC PBX, Centrex, and ISDN Resale/ BST PBX, Centrex, and ISDN Retail
CLEC Trunking-Resale / BST Trunking-Retail
UNEs – (See Appendix D)

Revision Date: 02/22/00 (see)

MAINTENANCE & REPAIR

Report/Measurement:

M&R-2. Customer Trouble Report Rate

Definition:

Initial and repeated customer direct or referred troubles reported within a calendar month per 100 lines/ circuits in service.

Exclusions:

- Trouble tickets canceled at the CLEC request.
- BST trouble reports associated with administrative service.
- Customer provided Equipment (CPE) troubles or CLEC equipment troubles.

Business Rules:

Customer Trouble Report Rate is computed by accumulating the number of maintenance initial and repeated trouble reports during the reporting period. The resulting number of trouble reports are divided by the total "number of service" lines, ports or combination that exist for the CLEC's and BST respectively at the end of the report month.

Calculation:

Customer Trouble Report Rate = (Count of Initial and Repeated Trouble Reports in the Current Period) / (Number of Service Access Lines in service at End of the Report Period) X 100

Report Structure:

- CLEC Specific
- CLEC Aggregate
- BST Aggregate

Data Retained Relating to CLEC Experience	Data Retained Relating to BST Experience
• Report Month • CLEC Company Name • Ticket Submission Date & Time (TICKET_ID) • Ticket Completion Date (CMPLTN_DT) • Service Type (CLASS_SVC_DESC) • Disposition and Cause (CAUSE_CD & CAUSE_DESC) • # Service Access Lines in Service at the end of period • Geographic Scope **NOTE:** Code in parentheses is the corresponding header found in the raw data file.	• Report Month • BST Company Code • Ticket Submission Date & Time • Ticket Completion Date • Service Type • Disposition and Cause (Non-Design / Non-Special Only) • Trouble Code (Design and Trunking Services) • # Service Access Lines in Service at the end of period • Geographic Scope

Retail Analog/Benchmark:

CLEC Residence-Resale / BST Residence -Retail
CLEC Business-Resale / BST Business-Retail
CLEC Design-Resale / BST Design-Retail
CLEC PBX, Centrex and ISDN Resale/ BST PBX, Centrex, and ISDN Retail
CLEC Trunking-Resale / BST Trunking-Retail
UNEs – (See Appendix D)

Revision Date: 02/22/00 (see)

MAINTENANCE & REPAIR

Report/Measurement:

M&R-3. Maintenance Average Duration

Definition:

The Average duration of Customer Trouble Reports from the receipt of the Customer Trouble Report to the time the trouble report is cleared.

Exclusions:

- Trouble reports canceled at the CLEC request
- BST trouble reports associated with administrative service
- Customer Provided Equipment (CPE) troubles or CLEC Equipment Troubles.
- Trouble reports greater than 10 days

Business Rules:

For Average Duration the clock starts on the date and time of the receipt of a correct repair request. The clock stops on the date and time the service is restored and the customer notified (when the technician completes the trouble ticket on his/her CAT or work system).

NOTE: Customer can be BST or CLEC

Calculation:

Maintenance Average Duration = Σ(Date and Time of Service Restoration) – (Date and Time Trouble Ticket was Opened) / Σ(Total Closed Troubles in the reporting period)

Report Structure:

- CLEC Specific
- BST Aggregate
- CLEC Aggregate

Data Retained Relating to CLEC Experience	Data Retained Relating to BST Experience
• Report Month • Total Tickets (LINE_NBR) • CLEC Company Name • Ticket Submission Date & Time (TIME_ID) • Ticket Completion Date (CMPLTN_DT • Service Type (CLASS_SVC_DESC) • Disposition and Cause (CAUSE_CD & CAUSE_DESC) • Geographic Scope **NOTE:** Code in parentheses is the corresponding header found in the raw data file.	• Report Month • Total Tickets • BST Company Code • Ticket Submission Date • Ticket submission Time • Ticket completion Date • Ticket Completion Time • Total Duration Time • Service Type • Disposition and Cause (Non – Design /Non-Special Only) • Trouble Code (Design and Trunking Services) • Geographic Scope

Retail Analog/Benchmark:

CLEC Residence-Resale / BST Residence-Resale
CLEC Business-Resale / BST Business-Retail
CLEC Design-Resale / BST Design-Retail
CLEC PBX, Centrex and ISDN Resale / BST PBX, Centrex and ISDN Retail
CLEC Trunking-Resale /BST Trunking-Retail
UNEs – (See Appendix D)

Revision Date: 02/22/00 (see)

MAINTENANCE & REPAIR

Report/Measurement:

M&R-4. Percent Repeat Troubles within 30 Days

Definition:

Trouble reports on the same line/circuit as a previous trouble report received within 30 calendar days as a percent of total troubles reported.

Exclusions:

- Trouble Reports canceled at the CLEC request
- BST Trouble Reports associated with administrative service
- Customer Provided Equipment (CPE) Troubles or CLEC Equipment Troubles.

Business Rules:

Includes Customer trouble reports received within 30 days of an original Customer trouble report.

Calculation:

Percent Repeat Troubles within 30 Days = (Count of Customer Troubles where more than one trouble report was logged for the same service line within a continuous 30 days) / (Total Trouble Reports Closed in Reporting Period) X 100

Report Structure:

- CLEC Specific
- CLEC Aggregate
- BST Aggregate

Data Retained Relating to CLEC Experience	Data Retained Relating to BST Experience
• Report Month • Total Tickets (LINE_NBR) • CLEC Company Name • Ticket Submission Date & Time (TICKET_ID) • Ticket Completion Date (CMPLTN_DT) • Total and Percent Repeat Trouble Reports within 30 Days (TOT_REPEAT) • Service Type • Disposition and Cause (CAUSE_CD & CAUSE_DESC) • Geographic Scope **NOTE:** Code parentheses is the corresponding header format found in the raw data file.	• Report Month • Total Tickets • BST Company Code • Ticket Submission Date • Ticket Submission Time • Ticket Completion Date • Ticket Completion Time • Total and Percent Repeat Trouble Reports within 30 Days • Service Type • Disposition and Cause (Non – Design/Non-Special only) • Trouble Code (Design and Trunking Services) • Geographic Scope

Retail Analog/Benchmark:

CLEC Residence-Resale / BST Residence-Retail
CLEC Business- Resale / BST Business-Retail
CLEC Design-Resale / BST Design-Retail
CLEC PBX, Centrex and ISDN Resale / BST PBX, Centrex and ISDN Retail
CLEC Trunking-Resale / BST Trunking-Retail
UNEs – Retail Analog (See Appendix D)

Revision date: 02/22/00 (see)

MANTENANCE & REPAIR

Report/Measurement:

M&R-5. Out of Service (OOS) > 24 Hours

Definition:

For Out of Service Troubles (no dial tone, cannot be called or cannot call out) the percentage of troubles cleared in excess of 24 hours. (All design services are considered to be out of service).

Exclusions:

- Trouble Reports canceled at the CLEC request
- BST Trouble Reports associated with administrative service
- Customer Provided Equipment (CPE) Troubles or CLEC Equipment Troubles.

Business Rules:

Customer Trouble reports that are out of service and cleared in excess of 24 hours. The clock begins when the trouble report is created in LMOS and the trouble is counted if the time exceeds 24 hours.

Calculation:

Out of Service (OOS) > 24 hours = (Total Troubles OOS > 24 Hours) / Total OOS Troubles in Reporting Period) X 100

Report Structure:

- CLEC Specific
- BST Aggregate
- CLEC Aggregate

Data Retained Relating to CLEC Experience	Data Retained Relating to BST Experience
• Report Month • Total Tickets • CLEC Company Name • Ticket Submission Date & Time (TICKET_ID) • Ticket Completion Date (CMPLTN_DT • Percentage of Customer Troubles out of • Service > 24 Hours (OOS>24_FLAG) • Service type (CLASS_SVC_DESC) • Disposition and Cause (CAUSE_CD & CAUSE-DESC) • Geographic Scope **NOTE:** Code in parentheses is the corresponding header found in the raw data file.	• Report Month • Total Tickets • BST Company Code • Ticket Submission Date • Ticket Submission time • Ticket Completion Date • Ticket Completion Time • Percent of Customer Troubles out of Service > 24 Hours • Service type • Disposition and Cause (Non – Design/Non-Special only) • Trouble Code (Design and Trunking Services) • Geographic Scope

Retail Analog/Benchmark:

CLEC Residence-Resale / BST Residence- Retail
CLEC Business- Resale / BST Business-Retail
CLEC Design-Resale / BST Design-Retail
CLEC PBX, Centrex and ISDN Resale / BST PBX, Centrex and ISDN Retail
CLEC Trunking-Resale /BST Trunking- Retail
UNEs Retail Analog – (See Appendix D)

Revision Date: 02/22/00 (see)

MAINTENANCE & REPAIR

Report/Measurement:	
M&R-6. Average Answer Time – Repair Centers	
Definition:	
This measures the average time a customers is in Que.	
Exclusions:	
None	
Business Rules:	
This measure is designed to measure the time required for CLEC & BST from the time of the ACD choice to the time of being answered. The clock starts when the CLEC Rep makes a choice to be put in queue for the next repair attendant and the clock stops when the repair attendant answers the call. (NOTE: The Column is a combined BST Residence and Business number)	
Level of Disaggregation:	
Region. CLEC/BST Service Centers and BST Repair Centers are regional.	
Calculation:	
Average Answer Time for BST's Repair Centers = (Time BST Repair Attendant Answers Call) – (Time of entry into queue until ACD Selection) / (Total number of calls by reporting period)	
Report Structure:	
• CLEC Aggregate • BST Aggregate	
Data Retained Relating to CLEC Experience	**Data Retained Relating to BST Experience**
• CLEC Average Answer Time	• BST Average Answer Time
Retail Analog/Benchmark:	
For CLEC, Average Answer Times in UNE Center and BRMC are comparable to the Average Answer Times in the BST Repair Centers. See Appendix D	

Revision Date: 02/22/00 (see)

BILLING

Report/Measurement:	
B-1. Invoice Accuracy	
Definition:	
This measure provides the percentage of accuracy of the billing invoices rendered to CLECs during the current month.	
Exclusions:	
• Adjustments not related to billing errors (e.g., credits for service outage, special promotion credits, adjustments to satisfy the customer)	
Business Rules:	
The accuracy of billing invoices delivered by BST to the CLEC must enable them to provide a degree of billing accuracy comparative to BST bills rendered to retail customers BST. CLECs request adjustments on bills determined to be incorrect. The BellSouth Billing verification process includes manually analyzing a sample of local bills from each bill period. The bill verification process draws from a mix of different customer billing options and types of service. An end-to-end auditing process is performed for new products and services. Internal measurements and controls are maintained on all billing processes.	
Calculation:	
Invoice Accuracy = (Total Billed Revenues during current month) – (Billing Related Adjustments during current month) / Total Billed Revenues during current month X 100	
Report Structure:	
• CLEC Specific • CLEC Aggregate • BST Aggregate	
Level of Disaggregation :	

• Product / Invoice Type
  ➢ Resale
  ➢ UNE
  ➢ Interconnection
• Geographic Scope
  ➢ Region	

Data Retained Relating to CLEC Experience:	**Data Retained Relating to BST Performance:**

• Report Month
• Invoice Type
• Total Billed Revenue
• Billing Related Adjustments
	• Report Month
	• Retail Type
	  ➢ CRIS
	  ➢ CABS
	• Total Billed Revenue
	• Billing Related Adjustments

Retail Analog/Benchmark	
CLEC Invoice Accuracy is comparable to BST Invoice Accuracy See Appendix D	

Revision Date: 02/28/00 (dg)

BILLING

Report/Measurement:	
B-2. Mean Time to Deliver Invoices	
Definition:	
This measure provides the mean interval for billing invoices	
Exclusions:	
Any invoices rejected due to formatting or content errors.	
Business Rules:	
Measures the mean interval for timeliness of billing records delivered to CLECs in an agreed upon format. CRIS-based invoices are measured in business days, and CABS-based invoices in calendar days.	
Calculation:	
Mean Time To Deliver Invoices = Σ_[(Invoice Transmission Date)– (Close Date of Scheduled Bill Cycle)] / (Count of Invoices Transmitted in Reporting Period)	
Report Structure:	
• CLEC Specific • CLEC Aggregate • BST Aggregate	
Level of Disaggregation:	

• Product / Invoice Type
  ➢ Resale
  ➢ UNE
  ➢ Interconnection
• Geographic Scope
  ➢ Region	

Data Retained Relating to CLEC Experience:	**Data Retained Relating to BST Performance:**

• Report Month
• Invoice Type
• Invoice Transmission Count
• Date of Scheduled Bill Close
	• Report Month
	• Retail Type
	  ➢ CRIS
	  ➢ CABS
	• Invoice Transmission Count
	• Date of Scheduled Bill Close

Retail Analog/Benchmark:	
CRIS-based invoices will be released for delivery within six (6) business days CABS-based invoices will be released for delivery within eight (8) calendar days. CLEC Average Delivery Intervals for both CRIS and CABS Invoices are comparable to BST Average delivery for both systems. See Appendix D	

Revision Date: 02/28/00 (dg)

BILLING

Report/Measurement:	
B-3. Usage Data Delivery Accuracy	
Definition:	
This measurement captures the percentage of recorded usage that is delivered error free and in an acceptable format to the appropriate Competitive Local Exchange Carrier (CLEC). These percentages will provide the necessary data for use as a comparative measurement for BellSouth performance. This measurement captures Data Delivery Accuracy rather than the accuracy of the individual usage recording.	
Exclusions:	
None	
Business Rules:	
The accuracy of the data delivery of usage records delivered by BST to the CLEC must enable them to provide a degree of accuracy comparative to BST bills rendered to their retail customers. If errors are detected in the delivery process, they are investigated, evaluated and documented. Errors are corrected and the data retransmitted to the CLEC.	
Calculations:	
Usage Data Delivery Accuracy = Σ[(Total number of usage data packs sent during current month) – (Total number of usage data packs requiring retransmission during current month)] / (Total number of usage data packs sent during current month) X 100	
Report Structure:	
• CLEC Specific • CLEC Aggregate • BST Aggregate	
Level of Disaggregation:	
• Geographic Scope ➢ Region	
Data Retained Relating to CLEC Experience:	**Data Retained Relating to BST Performance:**
• Report Month • Record Type ➢ BellSouth Recorded ➢ Non BellSouth Recorded	• Report Month • Record Type
Retail Analog/Benchmark:	
CLEC Usage Data Delivery Accuracy is comparable to BST Usage Data Delivery Accuracy See Appendix D	

Revision Date: 02/28/00 (dg)

BILLING

Report/Measurement:	
B-4. Usage Data Delivery Completeness	
Definition:	
This measurement provides percentage of complete and accurately recorded usage data (usage recorded by BellSouth and usage recorded by other companies and sent to BST for billing) that is processed and transmitted to the CLEC within thirty (30) days of the message recording date. A parity measure is also provided showing completeness of BST messages processed and transmitted via CMDS. BellSouth delivers its own retail usage from recording location to billing location via CMDS as well as delivering billing data to other companies. Timeliness, Completeness and Mean Time to Deliver Usage measures are reported on the same report.	
Exclusions:	
None	
Business Rules:	
The purpose of these measurements is to demonstrate the level of quality of usage data delivered to the appropriate CLEC. Method of delivery is at the option of the CLEC.	
Calculation:	
Usage Data Delivery Completeness = Σ(Total number of Recorded usage records delivered during the current month that are within thirty (30) days of the message recording date) / Σ(Total number of Recorded usage records delivered during the current month) X 100	
Report Structure	
• CLEC Specific • CLEC Aggregate • BST Aggregate	
Level of Disaggregation:	
• Geographic Scope ➢ Region	
Data Retained Relating to CLEC Experience:	**Data Retained Relating to BST Performance:**

• Report Month
• Record Type
  ➢ BellSouth Recorded
  ➢ Non BellSouth Recorded
	• Report Monthly
	• Record Type

Retail Analog/Benchmark:	
CLEC Usage Delivery Completeness is comparable to BST Usage Delivery Completeness See Appendix D	

Revision Date: 02/28/00 (dg)

BILLING

Report/Measurement:	
B-5. Usage Data Delivery Timeliness	
Definition:	
This measurement provides a percentage of recorded usage data (usage recorded by BST and usage recorded by other companies and sent to BST for billing) that is delivered to the appropriate CLEC within six (6) calendar days from the receipt of the initial recording. A parity measure is also provided showing timeliness of BST messages processed and transmitted via CMDS. Timeliness, Completeness and Mean Time to Deliver Usage measures are reported on the same report.	
Exclusions:	
None	
Business Rules:	
The purpose of this measurement is to demonstrate the level of timeliness for processing and transmission of usage data delivered to the appropriate CLEC. The usage data will be mechanically transmitted or mailed to the CLEC data processing center once daily. The Timeliness interval of usage recorded by other companies is measured from the date BST receives the records to the date BST distributes to the CLEC. Method of delivery is at the option of the CLEC.	
Calculation:	
Usage Data Delivery Timeliness = Σ(Total number of usage records sent within six (6) calendar days from initial recording/receipt) / Σ(Total number of usage records sent) X 100	
Report Structure:	
• CLEC Aggregate • CLEC Specific • BST Aggregate	
Level of Disaggregation:	
• Geographic Scope ➢ Region	
Data Retained Relating to CLEC Experience:	**Data Retained Relating to BST Performance:**
• Report Month • Record Type ➢ BellSouth Recorded ➢ Non-BellSouth Recorded	• Report Monthly • Record Type
Retail Analog/Benchmark:	
CLEC Usage Data Delivery Timeliness is comparable to BST Usage Data Delivery Timeliness See Appendix D	

Revision date: 02/28/00 (dg)

BILLING

Report/Measurement:	
B-6. Mean Time to Deliver Usage	
Definition:	
This measurement provides the average time it takes to deliver Usage Records to a CLEC. A parity measure is also provided showing timeliness of BST messages processed and transmitted via CMDS. Timeliness, Completeness and Mean Time to Deliver Usage measures are reported on the same report.	
Exclusions:	
None	
Business Rules:	
The purpose of this measurement is to demonstrate the average number of days it takes BST to deliver Usage data to the appropriate CLEC. Usage data is mechanically transmitted or mailed to the CLEC data processing center once daily. Method of delivery is at the option of the CLEC.	
Calculation:	
Mean Time to Deliver Usage = Σ_(Record volume X estimated number of days to deliver the Usage Record) / total record volume	
Report Structure:	
• CLEC Aggregate • CLEC Specific • BST Aggregate	
Level of Disaggregation:	
• Geographic Scope ➢ Region	
Data Retained Relating to CLEC Experience:	**Data Retained Relating to BST Performance:**
• Report Month • Record Type ➢ BellSouth Recorded ➢ Non-BellSouth Recorded	• Report Monthly • Record Type
Retail Analog/Benchmark:	
Mean Time to Deliver Usage to CLEC is comparable to Mean Time to Deliver Usage to BST See Appendix D	

Revision Date: 02/28/00 (dg)

OPERATOR SERVICES

Report/Measurement:
OS-1. Speed to Answer Performance/Average Speed to Answer – Toll
Definition:
Measurement of the average time in seconds calls wait before answered by a toll operator.
Exclusions:
Calls abandoned by customers are not reflected in the average speed to answer but are reflected in the conversion tables where the percent answered within "X" seconds is determined.
Business Rules:
The call waiting measurement scan starts when the customer enters the queue and ends when a BST representative answers the call. The average speed to answer is determined by measuring and accumulating the seconds of wait time from the entry of a customer into the BST call management system queue until the customer is transferred to a BST representative. No distinction is made between CLEC customers and BST customers.
Calculation:
The Average Speed to Answer for toll is calculated by using data from monthly system measurement reports taken from the centralized call routing switches. The "total call waiting seconds" is a sub-component of this measure which BST systems calculate by monitoring the number of calls in queue throughout the day multiplied by the time (in seconds) between monitoring events. The "total calls served" is the other sub-component of this measure, which BST systems record as the total number of calls handled by Operator Services toll centers. Since calls abandoned are not reflected in the calculation, the percent answered within the required timeframe is determined by using conversion tables with input for the abandonment rate.
Report Structure:
• Reported for the aggregate of BST and CLECs ➢ State
Level of Disaggregation:
None
Data Retained (on Aggregate Basis)
For the items below, BST's Performance Measurement Analysis Platform (PMAP) receives a final computation; therefore, no raw data file is available in PMAP. • Month • Call Type (Toll) • Average Speed of Answer
Retail Analog/Benchmark
Parity by Design See Appendix D

Revision Date: 02/28/00 (tg)

OPERATOR SERVICES

Report/Measurement:
OS-2. Speed to Answer Performance/Percent Answered within "X" Seconds – Toll
Definition:
Measurement of the percent of toll calls that are answered in less than "X" seconds. The number of seconds represented by "X" is thirty, except where a different regulatory benchmark has been set against the Average Speed to Answer by a State Commission.
Exclusions:
Calls abandoned by customers are not reflected in the average speed to answer but are reflected in the conversion tables where the percent answered within "X" seconds is determined.
Business Rules:
The call waiting measurement scan starts when the customer enters the queue and ends when a BST representative answers the call. The average speed to answer is determined by measuring and accumulating the seconds of wait time from the entry of a customer into the BST call management system queue until the customer is transferred to a BST representative. No distinction is made between CLEC customers and BST customers.
Calculation:
The Percent Answered within "X" Seconds measurement for toll is derived by using the BellCore Statistical Answer Conversion Tables, to convert the Average Speed to Answer measure into a percent of calls answered within "X" seconds. The BellCore Conversion Tables are specific to the defined parameters of work time, number of operators, max queue size and call abandonment rates.
Report Structure:
• Reported for the aggregate of BST and CLECs   ➢ State
Level of Disaggregation:
None
Data Retained (on Aggregate Basis)
For the items below, BST's Performance Measurement Analysis Platform (PMAP) receives a final computation; therefore, no raw data file is available in PMAP. • Month • Call Type (Toll) • Average Speed of Answer
Retail Analog/Benchmark
Parity by Design See Appendix D

Revision Date: 02/28/00 (tg)

OPERATOR SERVICES

Report/Measurement:
OS-3. Speed to Answer Performance/Average Speed to Answer – Directory Assistance (DA)
Definition:
Measurement of the average time in seconds calls wait before answer by a DA operator.
Exclusions:
Calls abandoned by customers are not reflected in the average speed to answer but are reflected in the conversion tables where the percent answered within "X" seconds is determined.
Business Rules:
The call waiting measurement scan starts when the customer enters the queue and ends when a BST representative answers the call. The average speed to answer is determined by measuring and accumulating the seconds of wait time from the entry of a customer into the BST call management system queue until the customer is transferred to a BST representative. No distinction is made between CLEC customers and BST customers.
Calculation:
The Average Speed to Answer for DA is calculated by using data from monthly system measurement reports taken from the centralized call routing switches. The "total call waiting seconds" is a sub-component of this measure which BST systems calculate by monitoring the number of calls in queue throughout the day multiplied by the time (in seconds) between monitoring events. The "total calls served" is the other sub-component of this measure, which BST systems record as the total number of calls handled by Operator Services DA centers. Since calls abandoned are not reflected in the calculation, the percent answered within the required timeframe is determined by using conversion tables with input for the abandonment rate.
Report Structure:
• Reported for the aggregate of BST and CLECs   ➢ State
Level of Disaggregation:
None
Data Retained (on Aggregate Basis)
For the items below, BST's Performance Measurement Analysis Platform (PMAP) receives a final computation; therefore, no raw data file is available in PMAP. • Month • Call Type (DA) • Average Speed of Answer
Retail Analog/Benchmark
Parity by Design See Appendix D

Revision Date: 02/28/00 (tg)

OPERATOR SERVICES

Report/Measurement:
OS-4. Speed to Answer Performance/Percent Answered within "X" Seconds – Directory Assistance (DA)
Definition:
Measurement of the percent of DA calls that are answered in less than "X" seconds. The number of seconds represented by "X" is twenty, except where a different regulatory benchmark has been set against the Average Speed to Answer by a State Commission.
Exclusions:
Calls abandoned by customers are not reflected in the average speed to answer but are reflected in the conversion tables where the percent answered within "X" seconds is determined.
Business Rules:
The call waiting measurement scan starts when the customer enters the queue and ends when a BST representative answers the call. The average speed to answer is determined by measuring and accumulating the seconds of wait time from the entry of a customer into the BST call management system queue until the customer is transferred to a BST representative. No distinction is made between CLEC customers and BST customers.
Calculation:
The Percent Answered within "X" Seconds measurement for DA is derived by using the BellCore Statistical Answer Conversion Tables, to convert the Average Speed to Answer measure into a percent of calls answered within "X" seconds. The BellCore Conversion Tables are specific to the defined parameters of work time, number of operators, max queue size and call abandonment rates.
Report Structure:
• Reported for the aggregate of BST and CLECs ➢ State
Level of Disaggregation:
None
Data Retained (on Aggregate Basis)
For the items below, BST's Performance Measurement Analysis Platform (PMAP) receives a final computation; therefore, no raw data file is available in PMAP. • Month • Call Type (DA) • Average Speed of Answer
Retail Analog/Benchmark
Parity by Design See Appendix D

Revision Date: 02/28/00 (tg)

E911

Report/Measurement:
E-1. Timeliness
Definition:
Measures the percentage of batch orders for E911 database updates (to CLEC resale and BST retail records) processed successfully within a 24-hour period.
Exclusions:
• Any resale order canceled by a CLEC • Facilities-based CLEC orders
Business Rules:
The 24-hour processing period is calculated based on the date and time processing starts on the batch orders and the date and time processing stops on the batch orders. Mechanical processing starts when SCC (BST's E911 vendor) receives E911 files containing batch orders extracted from BST's Service Order Communication System (SOCS). Processing stops when SCC loads the individual records to the E911 database. No distinctions are made between CLEC resale records and BST retail records.
Calculation:
E911 Timeliness = Σ (Number of batch orders processed within 24 hours ÷ Total number of batch orders submitted) X 100
Report Structure:

• Reported for the aggregate of CLEC resale updates and BST retail updates
  ➢ State
  ➢ Region

Levels of Disaggregation:
None
Data Retained
• Report month • Aggregate data
Retail Analog/Benchmark
Parity by Design See Appendix D

Revision Date: 02/28/00 (tg)

E911

Report/Measurement:
E-2. Accuracy
Definition:
Measures the individual E911 telephone number (TN) record updates (to CLEC resale and BST retail records) processed successfully for E911 with no errors.
Exclusions:
• Any resale order canceled by a CLEC • Facilities-based CLEC orders
Business Rules:
Accuracy is based on the number of records processed without error at the conclusion of the processing cycle. Mechanical processing starts when SCC (BST's E911 vendor) receives E911 files containing telephone number (TN) records extracted from BST's Service Order Communication System (SOCS). No distinctions are made between CLEC resale records and BST retail records.
Calculation:
E911 Accuracy = Σ(Number of record individual updates processed with no errors ÷ Total number of individual record updates) X 100
Report Structure:
• Reported for the aggregate of CLEC resale updates and BST retail updates ➢ State ➢ Region
Level of Disaggregation:
None
Data Retained
• Report month • Aggregate data
Retail Analog/Benchmark
Parity by Design See Appendix D

Revision Date: 02/28/00 (tg)

E911

Report/Measurement:
E-3. Mean Interval
Definition:
Measures the mean interval processing of E911 batch orders (to update CLEC resale and BST retail records).
Exclusions:
• Any resale order canceled by a CLEC • Facilities-based CLEC orders
Business Rules:
The processing period is calculated based on the date and time processing starts on the batch orders and the date and time processing stops on the batch orders. Data is posted in 4-hour increments up to and beyond 24 hours. No distinctions are made between CLEC resale records and BST retail records.
Calculation:
E911 Mean Interval = Σ (Date and time of batch order completion – Date and time of batch order submission) ÷ (Number of batch orders completed)
Report Structure:

• Reported for the aggregate of CLEC resale updates and BST retail updates
  ➢ State
  ➢ Region

Level of Disaggregation:
None
Data Retained (on Aggregate Basis)
• Report month • Aggregate data
Retail Analog/Benchmark
Parity by Design See Appendix D

Revision Date: 02/28/00 (tg)

TRUNK GROUP PERFORMANCE

Report/Measurement:

TGP-1. Trunk Group Performance-Aggregate

Definition:

A report of aggregate blocking information for CLEC trunk groups and BellSouth trunk groups.

Exclusions:

- Trunk Groups for which valid data is not available for an entire study period
- Duplicate trunk group information

Business Rules:

- Aggregate blocking results are created using the statistical analysis package and are output into Excel with separate table for each geographic area.

- For each geographic area, plots are generated for: a) the monthly blocking by hour for each affecting group (BellSouth or CLEC), and b) the difference between BellSouth blocking data and CLEC blocking data is calculated and plotted.

- The TCBH blocking is calculated by determining the monthly averaging blocking for each hour for each trunk. The hour with the highest usage is selected as the TCBH and the blocking for that hour is reported.

- Trunk Categorization: This report displays, over a reporting cycle, aggregate, weighted average blocking data for each hour of a day. Therefore, for each reporting cycle, 24 blocking data points are generated for two aggregate groups of selected trunk groups. These groups are CLEC affecting and BellSouth affecting trunk groups. In order to assign trunk groups to each aggregate group, all trunk groups are first assigned to a category. A trunk group's end points and the type of traffic that is transmitted on it define a category. Selected categories of trunk groups are assigned to the aggregate groups to that trunk reports can be generated. The categories to which trunk groups have been assigned for this report are as follows:

CLEC Affecting Categories:

	Point A	**Point B**
Category 1:	BellSouth End Office	BellSouth Access Tandem
Category 3:	BellSouth End Office	CLEC Switch
Category 4:	BellSouth Local Tandem	CLEC Switch
Category 5:	BellSouth Access Tandem	CLEC Switch
Category 10:	BellSouth End Office	BellSouth Local Tandem
Category 16:	BellSouth Tandem	BellSouth Tandem

BellSouth Affecting Category:

·	**Point A**	**Point B**
Category 9:	BellSouth End Office	BellSouth End Office

TRUNK GROUP PERFORMANCE - (Trunk Group Performance-Aggregate – Continued)

Calculation:

Monthly Weighted Average Blocking:

(Blocking data for each hour X number of valid measurement days within each week) / Σ (Total number of valid measurement days within each week)

Example: Hour		Week 1	Week 2	Week 3	Week 4	Monthly
1	Blocking	1%	0.5%	2%	1.5%	1.8%
	# Days	7	7	5	6	
2	Blocking	0%	0%	0.2%	0.3%	.1%
	# Days	7	5	5	7	
3	Blocking	1%	1%	0.5%	2%	1.1%
	# Days	7	7	7	7	
24	Blocking	1%	0.5%	2%	1.5%	1.2%
	# Days	7	7	5	6	

The monthly weighted average blocking for hour 1 for a particular trunk group is calculated as follows:

$\frac{(1x5)+(0.5x5)+(2x4)+(1.5x4)}{(5+5+4+4)} = 1.2\%$

Aggregate Monthly Blocking:

(Monthly weighted average blocking value for each trunk group) X (number of trunks within each trunk group) / Σ (number of trunks in the aggregate group)

Example: Trunk Group	Trunks in Service	Blocking Hour 1	Blocking Hour 2	Blocking Hour 3	Blocking Hour 4	……Blocking Hour 24
A	24	3%	0%	1%	0%	0%
B	144	2%	0%	1%	0.5%	0.5%
C	528	0%	0.5%	1%	1%	1%
D	316	1%	0%	1%	0.1%	0%
E	940	1%	1%	4%	0%	0%
Aggregate		0.8%	0.6%	2.4%	0.3%	0.3%

The aggregate weighted monthly blocking for hour 1 is calculated as follows:

$\frac{(3x24)+(2x144)+(0x528)+(1x316)+(1x940)}{(24+144+528+316+940)} = 0.8\%$

The purpose of the Trunk Group Performance Report is to provide trunk blocking measurements on CLEC and BST trunk groups for comparison only. It is not the intent of the report that it be used for network management and/or engineering.

Report Structure:

- CLEC Aggregate
  - State

Level of Disaggregation:

Trunk Group

Data Retained Relating to CLEC Experience	Data Retained Relating to BST Experience
• Report Month • Total Trunk Groups • Number of Trunk Groups by CLEC • Hourly average blocking per trunk group	• Report Month • Total Trunk Groups • Aggregate Hourly average blocking

Retail Analog/Benchmark:

Any 2 hour period in 24 hours where CLEC blockage exceeds BST blockage by more than 0.5% = a miss using trunk groups 1, 3, 4, 5, 10, 16 for CLECs and 9 for BST.

Revision Date: 02/28/00 (tm)

TRUNK GROUP PERFORMANCE

Report/Measurement:

TGP-2. Trunk Group Performance-CLEC Specific

Definition:

A report of blocking information for CLEC trunk groups.

Exclusions:

- Trunk Groups for which valid data is not available for an entire study period
- Duplicate trunk group information

Business Rules:

- Aggregate blocking results are created using the statistical analysis package and are output into Excel with separate table for each geographic area.

- For each geographic area, plots are generated for the monthly blocking by hour

- The TCBH blocking is calculated by determining the monthly averaging blocking for each hour for each trunk. The hour with the highest usage is selected as the TCBH and the blocking for that hour is reported.

- Trunk Categorization: This report displays, over a reporting cycle, aggregate, weighted average blocking data for each hour of a day. Therefore, for each reporting cycle, 24 blocking data points are generated for CLEC trunk groups. In order to assign trunk groups to the CLEC group, all trunk groups are first assigned to a category. A trunk group's end points and the type of traffic that is transmitted on it define a category. Selected categories of trunk groups are assigned to the aggregate groups to that trunk reports can be generated. The categories to which trunk groups have been assigned for this report are as follows:

CLEC Affecting Categories:

	Point A	Point B
Category 1:	BellSouth End Office	BellSouth Access Tandem
Category 3:	BellSouth End Office	CLEC Switch
Category 4:	BellSouth Local Tandem	CLEC Switch
Category 5:	BellSouth Access Tandem	CLEC Switch
Category 10:	BellSouth End Office	BellSouth Local Tandem
Category 16:	BellSouth Tandem	BellSouth Tandem

TRUNK GROUP PERFORMANCE - (Trunk Group Performance-CLEC Specific – Continued)

Calculation:

Monthly Weighted Average Blocking:

(Blocking data for each hour X number of valid measurement days within each week) / Σ (Total number of valid measurement days within each week)

Example: Hour		Week 1	Week 2	Week 3	Week 4	Monthly
1	Blocking	1%	0.5%	2%	1.5%	1.8%
	# Days	7	7	5	6	
2	Blocking	0%	0%	0.2%	0.3%	.1%
	# Days	7	5	5	7	
3	Blocking	1%	1%	0.5%	2%	1.1%
	# Days	7	7	7	7	5
24	Blocking	1%	0.5%	2%	1.5%	1.2%
	# Days	7	7	5	6	

The monthly weighted average blocking for hour 1 for a particular trunk group is calculated as follows:

$$\frac{(1x5)+(0.5x5)+(2x4)+(1.5x4)}{(5+5+4+4)} = 1.2\%$$

Aggregate Monthly Blocking:

(Monthly weighted average blocking value for each trunk group) X (number of trunks within each trunk group) / Σ (number of trunks in the aggregate group)

Example: Trunk Group	Trunks in Service	Blocking Hour 1	Blocking Hour 2	Blocking Hour 3	Blocking Hour 4	…….	Blocking Hour 24
A	24	3%	0%	1%	0%		0%
B	144	2%	0%	1%	0.5%		0.5%
C	528	0%	0.5%	1%	1%		1%
D	316	1%	0%	1%	0.1%		0%
E	940	1%	1%	4%	0%		0%
Aggregate		0.8%	0.6%	2.4%	0.3%		0.3%

The aggregate weighted monthly blocking for hour 1 is calculated as follows:

$$\frac{(3x24)+(2x144)+(0x528)+(1x316)+(1x940)}{(24+144+528+316+940)} = 0.8\%$$

The purpose of the Trunk Group Performance Report is to provide trunk blocking measurements on CLEC and BST trunk groups for comparison only. It is not the intent of the report that it be used for network management and/or engineering.

Report Structure:

- CLEC Specific
- Trunk Group

Level of Disaggregation:

Trunk Group

Data Retained Relating to CLEC Experience	Data Retained Relating to BST Experience
• Report Month • Total Trunk Groups • Number of Trunk Groups by CLEC • Hourly average blocking per trunk group	• Report Month • Total Trunk Groups • Aggregate Hourly average blocking

Retail Analog/Benchmark:

Any 2 hour period in 24 hours where CLEC blockage exceeds BST blockage by more than 0.5% = a miss using trunk groups 1, 3, 4, 5, 10, 16 for CLECs and 9 for BST.

Revision Date: 02/28/00 (tm)

TRUNK GROUP PERFORMANCE

Report/Measurement:

TGP-3. Trunk Group Service Report

Definition:

A report of the percent blocking above the Measured Blocking Threshold (MBT) on all final trunk groups between CLEC Points of Termination and BST end offices or tandems.

Exclusions:

- Trunk groups for which valid traffic data is not available
- High use trunk groups

Business Rules:

Traffic trunking data measurements are validated and processed by the Total Network Data System/Trunking (TNDS/TK), a Telcordia (BellCore) supported application, on an hourly basis for Average Business Days (Monday through Friday). The traffic load sets, including offered load and observed blocking ratio (calls blocked divided by calls attempted), are averaged for a 20 day period, and the busy hour is selected. The busy hour average data for each trunk group is captured for reporting purposes. Although all trunk groups are available for reporting, the report highlight those trunk groups with blocking greater than the Measured Blocking Threshold (MBT) and the number of consecutive monthly reports that the trunk group blocking has exceeded the MBT. The MBT for CTTG is 2% and the MBT for all other trunk groups is 3%.

Calculation:

Measured blocking = (Total number of blocked calls) / (Total number of attempted calls) X 100

Report Structure:

- BST Aggregate
  - CTTG
  - Local
- CLEC Aggregate
  - BST Administered CLEC Trunk
  - CLEC Administered CLEC Trunk
- CLEC Specific
  - BST Administered CLEC Trunk
  - CLEC Administered CLEC Trunk

Level of Disaggregation:

State

Data Retained Relating to CLEC Experience	**Data Retained Relating to BST Experience**
• Report month • Total trunk groups • Total trunk groups for which data is available • Trunk groups with blocking greater than the MBT • Percent of trunk groups with blocking greater than the MBT	• Report month • Total trunk groups • Total trunk groups for which data is available • Trunk groups with blocking greater than the MBT • Percent of trunk groups with blocking greater than the MBT

Retail Analog/Benchmark:

CLEC Trunk Blockage/BST Trunk Blockage
See Appendix D

Revision Date: 02/28/00 (tm)

TRUNK GROUP PERFORMANCE

Report/Measurement:

TGP-4. Trunk Group Service Detail

Definition:

A detailed list of all final trunk groups between CLEC Points of Presence and BST end offices or tandems, and the actual blocking performance when the blocking exceeds the Measured Blocking Threshold (MBT) for the trunk groups.

Exclusions:

- Trunk groups for which valid traffic data is not available
- High use trunk groups

Business Rules:

Traffic trunking data measurements are validated and processed by the Total Network Data System/Trunking (TNDS/TK), a Telcordia (Bellcore) supported application, on an hourly basis for Average Business Days (Monday through Friday). The traffic load sets, including offered load and observed blocking ratio (calls blocked divided by calls attempted), are averaged for a 20 day period, and the busy hour is selected. The busy hour average data for each trunk group is captured for reporting purposes. Although all trunk groups are available for reporting, the report highlight those trunk groups with blocking greater than the Measured Blocking Threshold (MBT) and the number of consecutive monthly reports that the trunk group blocking has exceeded the MBT. The MBT for CTTG is 2% and the MBT for all other trunk groups is 3%.

Calculation:

Measured Blocking = (Total number of blocked calls) / (Total number of attempted calls) X 100

Report Structure:

. BST Specific ➢ .Traffic Identity ➢ TGSN ➢ Tandem ➢ End Office ➢ Description ➢ Observed Blocking ➢ Busy Hour ➢ Number Trunks ➢ Valid study days ➢ Number reports ➢ Remarks	CLEC Specific ➢ Traffic Identity ➢ TGSN ➢ Tandem ➢ CLEC POT ➢ Description ➢ Observed Blocking ➢ Busy Hour ➢ Number Trunks ➢ Valid study days ➢ Number reports ➢ Remarks

Level of Disaggregation:

State

Data Retained Relating to CLEC Experience	Data Retained Relating to BST Experience
• Report month • Total trunk groups • Total trunk groups for which data is available • Trunk groups with blocking greater than the MBT • Percent of trunk groups with blocking greater than the MBT • Traffic identity, TGSN, end points, description, busy hour, valid study days, number reports	• Report month • Total trunk groups • Total trunk groups for which data is available • Trunk groups with blocking greater than the MBT • Percent of trunk groups with blocking greater than the MBT • Traffic identity, TGSN, end points, description, busy hour, valid study days, number reports

Retail Analog/Benchmark:

CLEC Trunk Blockage/BST Blockage
See Appendix D

Revision Date: 02/28/00 (tm)

COLLOCATION

Report/Measurement:
C-1. Average Response Time
Definition:
Measures the average time (counted in business days) from the receipt of a complete and accurate collocation application (including receipt of application fees) to the date BellSouth responds in writing.
Exclusions:
• Requests to augment previously completed arrangements • Any application cancelled by the CLEC
Business Rules:
The clock starts on the date that BST receives a complete and accurate collocation application accompanied by the appropriate application fee. The clock stops on the date that BST returns a response. The clock will restart upon receipt of changes to the original application request.
Calculation:
Average Response Time = Σ(Request Response Date) – (Request Submission Date) / Count of Responses Returned within Reporting Period.
Report Structure:
• Individual CLEC (alias) aggregate • Aggregate of all CLECs
Level of Disaggregation:
• State, Region and further geographic disaggregation as required by State Commission Order (e.g. Metropolitan Service Area – MSA) • Virtual • Physical
Data Retained:
• Report period • Aggregate data
Retail Analog/Benchmark:
See Appendix D

Revision Date: 01/27/00 (tg)

COLLOCATION

Report/Measurement:
C-2. Average Arrangement Time
Definition:
Measures the average time from the receipt of a complete and accurate Bona Fide firm order (including receipt of appropriate fee) to the date BST completes the collocation arrangement.
Exclusions:
• Any Bona Fide firm order cancelled by the CLEC • Bona Fide firm orders to augment previously completed arrangements • Time for BST to obtain permits • Time during which the collocation contract is being negotiated
Business Rules:
The clock starts on the date that BST receives a complete and accurate Bona Fide firm order accompanied by the appropriate fee. The clock stops upon submission of the permit request and restarts upon receipt of the approved permit. Changes (affecting the provisioning interval or capital expenditures) that are submitted while provisioning is in progress may alter the completion date. The clock stops on the date that BST completes the collocation arrangement.
Calculation:
Average Arrangement Time = Σ(Date Collocation Arrangement is Complete) – (Date Order for Collocation Arrangement Submitted) / Total Number of Collocation Arrangements Completed during Reporting Period.
Report Structure:
• Individual CLEC (alias) aggregate • Aggregate of all CLECs
Level of Disaggregation:
• State, Region and further geographic disaggregation as required by State Commission Order (e.g. Metropolitan Service Area – MSA) • Virtual • Physical
Data Retained:
• Report period • Aggregate data
Retail Analog/Benchmark:
See Appendix D

Revision Date: 01/27/00 (tg)

COLLOCATION

Report/Measurement:
C-3. Percent of Due Dates Missed
Definition:
Measures the percent of missed due dates for collocation arrangements.
Exclusions:
• Any Bona Fide firm order cancelled by the CLEC • Bona Fide firm orders to augment previously completed arrangements • Time for BST to obtain permits • Time during which the collocation contract is being negotiated
Business Rules:
The clock starts on the date that BST receives a complete and accurate Bona Fide firm order accompanied by the appropriate fee. The clock stops on the date that BST completes the collocation arrangement.
Calculation:
% of Due Dates Missed = Σ (Number of Orders not completed w/i ILEC Committed Due Date during Reporting Period) / Number of Orders Completed in Reporting Period) X 100
Report Structure:
• Individual CLEC (alias) aggregate • Aggregate of all CLECs
Level of Disaggregation:
• State, Region and further geographic disaggregation as required by State Commission Order (e.g. Metropolitan Service Area-MSA) • Virtual • Physical
Data Retained:
• Report period • Aggregate data
Retail Analog/Benchmark:
90% ≤ Commit Date

Revision Date: 01/27/00 (tg)

Appendix A: Reporting Scope*

Standard Service Groupings	*Pre-Order, Ordering* ➢ Resale Residence ➢ Resale Business ➢ Resale Special ➢ Local Interconnection Trunks ➢ UNE ➢ UNE - Loops w/LNP *Provisioning* ➢ UNE Non-Design ➢ UNE Design ➢ Local Interconnection Trunks ➢ Resale Residence ➢ Resale Business ➢ Resale Design ➢ BST Trunks ➢ BST Residence Retail ➢ BST Business Retail ➢ BST Design Retail *Maintenance and Repair* ➢ Local Interconnection Trunks ➢ UNE Non-Design ➢ UNE Design ➢ Resale Residence ➢ Resale Business ➢ Resale Design ➢ BST Interconnection Trunks ➢ BST Residence Retail ➢ BST Business Retail ➢ BST Design Retail Local Interconnection Trunk Group Blockage ➢ BST CTTG Trunk Groups ➢ CLEC Trunk Groups

Appendix A: Reporting Scope*

Standard Service Order Activities *These are the generic BST/CLEC service order activities which are included in the Pre-Ordering, Ordering, and Provisioning sections of this document. It is not meant to indicate specific reporting categories.*	➢ New Service Installations ➢ Service Migrations Without Changes ➢ Service Migrations With Changes ➢ Move and Change Activities ➢ Service Disconnects (Unless noted otherwise)
Pre-Ordering Query Types: **Maintenance Query Types:**	➢ Address ➢ Telephone Number ➢ Appointment Scheduling ➢ Customer Service Record ➢ Feature Availability
Report Levels	➢ CLEC RESH ➢ CLEC MSA ➢ CLEC State ➢ CLEC Region ➢ Aggregate CLEC State ➢ Aggregate CLEC Region ➢ BST State ➢ BST Region

* Scope is report, data source and system dependent, and, therefore, will differ with each report.

Appendix B: Glossary of Acronyms and Terms

A	**ACD**	Automatic Call Distributor - A service that provides status monitoring of agents in a call center and routes high volume incoming telephone calls to available agents while collecting management information on both callers and attendants.
	AGGREGATE	Sum total of all items in like category, e.g. CLEC aggregate equals the sum total of all CLECs' data for a given reporting level.
	ASR	Access Service Request - A request for access service terminating delivery of carrier traffic into a Local Exchange Carrier's network.
	ATLAS	Application for Telephone Number Load Administration System - The BellSouth Operations System used to administer the pool of available telephone numbers and to reserve selected numbers from the pool for use on pending service requests/service orders.
	ATLASTN	ATLAS software contract for Telephone Number
	AUTO CLARIFICATION	The number of LSRs that were electronically rejected from LESOG and electronically returned to the CLEC for correction.
B	**BILLING**	The process and functions by which billing data is collected and by which account information is processed in order to render accurate and timely billing.
	BOCRIS	Business Office Customer Record Information System - A front-end presentation manager used by BellSouth organizations to access the CRIS database.
	BRC	Business Repair Center – The BellSouth Business Systems trouble receipt center which serves large business and CLEC customers.
	BST	BellSouth Telecommunications, Inc.
C	**CKTID**	A unique identifier for elements combined in a service configuration
	CLEC	Competitive Local Exchange Carrier
	CMDS	Centralized Message Distribution System - BellCore administered national system used to transfer specially formatted messages among companies.
	COFFI	Central Office Feature File Interface - A BellSouth Operations System database which maintains Universal Service Order Code (USOC) information based on current tariffs.

Appendix B: Glossary of Acronyms and Terms – Continued

C	**COFIUSOC**	COFFI software contract for feature/service information
	CRIS	Customer Record Information System - The BellSouth proprietary corporate database and billing system for non-access customers and services.
	CRSACCTS	CRIS software contract for CSR information
	CSR	Customer Service Record
	CTTG	Common Transport Trunk Group - Final trunk groups between BST & Independent end offices and the BST access tandems.
D	**DESIGN**	Design Service is defined as any Special or Plain Old Telephone Service Order which requires BellSouth Design Engineering Activities
	DISPOSITION & CAUSE	Types of trouble conditions, e.g. No Trouble Found, Central Office Equipment, Customer Premises Equipment, etc.
	DLETH	Display Lengthy Trouble History - A history report that gives all activity on a line record for trouble reports in LMOS
	DLR	Detail Line Record - All the basic information maintained on a line record in LMOS, e.g. name, address, facilities, features etc.
	DOE	Direct Order Entry System - An internal BellSouth service order entry system used by BellSouth Service Representatives to input business service orders in BellSouth format.
	DSAP	DOE (Direct Order Entry) Support Application - The BellSouth Operations System which assists a Service Representative or similar carrier agent in negotiating service provisioning commitments for non-designed services and UNEs.
	DSAPDDI	DSAP software contract for schedule information
E	**E911**	Provides callers access to the applicable emergency services bureau by dialing a 3-digit universal telephone number.
	EDI	Electronic Data Interchange - The computer-to-computer exchange of inter and/or intra company business documents in a public standard format.
F	**FATAL REJECT**	The number of LSRs that were electronically rejected from LEO, which checks to see of the LSR has all the required fields correctly populated
	FLOW-THROUGH	In the context of this document, LSRs submitted electronically via the CLEC mechanized ordering process that flow through to the BST OSS without manual or human intervention.
	FOC	Firm Order Confirmation - A notification returned to the CLEC confirming that the LSR has been received and accepted, including the specified commitment date.

Appendix B: Glossary of Acronyms and Terms - Continued

G		
H	**HAL**	"Hands Off" Assignment Logic - Front end access and error resolution logic used in interfacing BellSouth Operations Systems such as ATLAS, BOCRIS, LMOS, PSIMS, RSAG and SOCS.
	HALCRIS	HAL software contract for CSR information
I	**ISDN**	Integrated Services Digital Network
K		
L	**LCSC**	Local Carrier Service Center - The BellSouth center which is dedicated to handling CLEC LSRs, ASRs, and Preordering transactions along with associated expedite requests and escalations.
	LEGACY SYSTEM	Term used to refer to BellSouth Operations Support Systems (see OSS)
	LENS	Local Exchange Negotiation System - The BellSouth LAN/web server/OS application developed to provide both preordering and ordering electronic interface functions for CLECs.
	LEO	Local Exchange Ordering - A BellSouth system which accepts the output of EDI, applies edit and formatting checks, and reformats the Local Service Requests in BellSouth Service Order format.
	LESOG	Local Exchange Service Order Generator - A BellSouth system which accepts the service order output of LEO and enters the Service Order into the Service Order Control System using terminal emulation technology.
	LMOS	Loop Maintenance Operations System - A BellSouth Operations System that stores the assignment and selected account information for use by downstream OSS and BellSouth personnel during provisioning and maintenance activities.
	LMOS HOST	LMOS host computer
	LMOSupd	LMOS updates
	LNP	Local Number Portability - In the context of this document, the capability for a subscriber to retain his current telephone number as he transfers to a different local service provider.
	LOOPS	Transmission paths from the central office to the customer premises.
	LSR	Local Service Request – A request for local resale service or unbundled network elements from a CLEC.
M	**MAINTENANCE & REPAIR**	The process and function by which trouble reports are passed to BellSouth and by which the related service problems are resolved.
	MARCH	A BellSouth Operations System which accepts service orders, interprets the coding contained in the service order image, and constructs the specific switching system Recent Change command messages for input into end office switches.

Appendix B: Glossary of Acronyms and Terms – Continued

N	**NC**	"No Circuits" - All circuits busy announcement
O	**OASIS**	Obtain Availability Services Information System - A BellSouth front-end processor, which acts as an interface between COFFI and RNS. This system takes the USOCs in COFFI and translates them to English for display in RNS.
	OASISBSN	OASIS software contract for feature/service
	OASISCAR	OASIS software contract for feature/service
	OASISLPC	OASIS software contract for feature/service
	OASISMTN	OASIS software contract for feature/service
	OASISNET	OASIS software contract for feature/service
	OASISOCP	OASIS software contract for feature/service
	ORDERING	The process and functions by which resale services or unbundled network elements are ordered from BellSouth as well as the process by which an LSR or ASR is placed with BellSouth.
	OSPCM	Outside Plant Contract Management System - Provides Scheduling Information.
	OSS	Operations Support System - A support system or database which is used to mechanize the flow or performance of work. The term is used to refer to the overall system consisting of hardware complex, computer operating system(s), and application which is used to provide the support functions.
	OUT OF SERVICE	Customer has no dial tone and cannot call out.
P	**POTS**	Plain Old Telephone Service
	PREDICTOR	The BellSouth Operations system which is used to administer proactive maintenance and rehabilitation activities on outside plant facilities, provide access to selected work groups (e.g. RRC & BRC) to Mechanized Loop Testing and switching system I/O ports, and provide certain information regarding the attributes and capabilities of outside plant facilities.
	PREORDERING	The process and functions by which vital information is obtained, verified, or validated prior to placing a service request.
	PROVISIONING	The process and functions by which necessary work is performed to activate a service requested via an LSR or ASR and to initiate the proper billing and accounting functions.
	PSIMS	Product/Service Inventory Management System - A BellSouth database Operations System which contains availability information on switching system features and capabilities and on BellSouth service availability. This database is used to verify the availability of a feature or service in an NXX prior to making a commitment to the customer.
	PSIMSORB	PSIMS software contract for feature/service

Appendix B: Glossary of Acronyms and Terms – Continued

Q		
R	**RNS**	Regional Negotiation System - An internal BellSouth service order entry system used by BellSouth Consumer Services to input service orders in BellSouth format.
	RRC	Residence Repair Center - The BellSouth Consumer Services trouble receipt center which serves residential customers.
	RSAG	Regional Street Address Guide - The BellSouth database, which contains street addresses validated to be accurate with state and local governments.
	RSAGADDR	RSAG software contract for address search
	RSAGTN	RSAG software contract for telephone number search
S	**SOCS**	Service Order Control System - The BellSouth Operations System which routes service order images among BellSouth drop points and BellSouth Operations Systems during the service provisioning process.
	SOIR	Service Order Interface Record - any change effecting activity to a customer account by service order that impacts 911/E911.
T	**TAFI**	Trouble Analysis Facilitation Interface - The BellSouth Operations System that supports trouble receipt center personnel in taking and handling customer trouble reports.
	TAG	Telecommunications Access Gateway – TAG was designed to provide an electronic interface, or machine-to-machine interface for the bi-directional flow of information between BellSouth's OSSs and participating CLECs.
	TN	Telephone Number
	TOTAL MANUAL FALLOUT	The number of LSRs which are entered electronically but require manual entering into a service order generator.
U	**UNE**	Unbundled Network Element
V		
W	**WTN**	A unique identifier for elements combined in a service configuration
X		
Y		
Z		
Σ		Sum of:

Appendix C

BELLSOUTH'S AUDIT POLICY:

BellSouth currently provides many CLECs with certain audit rights as a part of their individual interconnection agreements. However, it is not reasonable for BellSouth to undergo an audit of the SQM for every CLEC with which it has a contract. BellSouth has developed a proposed Audit Plan for use by the parties to an audit. If requested by a Public Service Commission or by a CLEC exercising contractual audit rights, BellSouth will agree to undergo a comprehensive audit of the aggregate level reports for both BellSouth and the CLEC(s) for each of the next five (5) years (2000 – 2005), to be conducted by an independent third party. The results of that audit will be made available to all the parties subject to proper safeguards to protect proprietary information. This aggregate level audit includes the following specifications:

1. The cost shall be borne 50% by BellSouth and 50% by the CLEC or CLECs.

2. The independent third party auditor shall be selected with input from BellSouth, the PSC, if applicable, and the CLEC(s).

3. BellSouth, the PSC and the CLEC(s) shall jointly determine the scope of the audit.

BellSouth reserves the right to make changes to this audit policy as growth and changes in the industry dictate.

APPENDIX D Analogs and Benchmarks				
BST SQM Category	**MEASURES AND SUB-METRICS**	**RESALE** Retail Analogue	**UNES** Retail Analogue	Benchmark*
Pre-Ordering	**Percent Response Received within "X" seconds**	Parity w/ retail where applicable.		
	OSS Interface Availability			99.5%
Ordering	**Percent Flow-Through Service Request** • Residence • Business • UNE			 90% 80% 80%
	Percent Rejected Service Request	Diagnostic		Diagnostic.
	Reject Interval (Mechanized)	UD	UD	95% within 1 hrs
	• Reject Interval (Non-Mechanized and Partially Mechanized)	UD	UD	85% < 24 hrs
	Firm Order Confirmation Timeliness (Mechanized) (Non-Mechanized and Partially Mechanized)	UD	UD	95% within 4 hrs 85% <48 Hrs
	Speed of Answer in Ordering Center	X	X	
Provisioning	**Mean Held Order Interval**			
	• Resale Residence	X		
	• Resale Business	X		
	• Resale Design	X		
	• Resale PBX	X		
	• Resale Centrex	X		
	• Resale IDSN	X		
	• UNE Loop and Port Combos		Retail Residence and Business	
	• UNE 2w Loop with NP – Non-Design		Retail Residence and Business	
	• UNE 2w Loop without NP – Non-Design		Retail Residence and Business	
	• UNE Loop Other with NP Non-Design		Retail Residence and Business	
	• UNE Loop Other without NP Non-Design		Retail Residence and Business	
	• UNE Other Non Design		Retail Residence and Business	
	• UNE 2w Loop with NP – Design		Retail Residence and Business	
	• UNE 2w Loop without NP – Design		Retail Residence and Business	
	• UNE Loop Other with NP – Design		Retail Design	
	• UNE Loop Other without NP - Design		Retail Design	

APPENDIX D Analogs and Benchmarks				
BST SQM Category	**MEASURES AND SUB-METRICS**	**RESALE** Retail Analogue	**UNES** Retail Analogue	Benchmark*
	• UNE Other Design		Retail Design	
	• Local Interconnection Trunks	X		
	Average Jeopardy Notice Interval (Mechanized)			
	• Resale Residence			95% >=24 Hrs.
	• Resale Business			95% >=24 Hrs.
	• Resale Design			95% >=24 Hrs.
	• Resale PBX			95% >=24 Hrs.
	• Resale Centrex			95% >=24 Hrs.
	• Resale IDSN			95% >=24 Hrs.
	• UNE Loop and Port Combos			95% >=24 Hrs.
	• UNE 2w Loop with NP – Non-Design			95% >=24 Hrs.
	• UNE 2w Loop without NP – Non-Design			95% >=24 Hrs.
	• UNE Loop Other with NP Non-Design			95% >=24 Hrs.
	• UNE Loop Other without NP Non-Design			95% >=24 Hrs.
	• UNE Other Non Design			95% >=24 Hrs.
	• UNE 2w Loop with NP – Design			95% >=24 Hrs.
	• UNE 2w Loop without NP – Design			95% >=24 Hrs.
	• UNE Loop Other with NP – Design			95% >=24 Hrs.
	• UNE Loop Other without NP - Design			95% >=24 Hrs.
	• UNE Other Design			95% >=24 Hrs.
	• Local Interconnection Trunks			95% >=24 Hrs.
	% of Orders given jeopardy notice (Mechanized)			
	• Resale Residence	X		
	• Resale Business	X		
	• Resale Design	X		
	• Resale PBX	X		
	• Resale Centrex	X		
	• Resale IDSN	X		
	• UNE Loop and Port Combos		Retail Residence and Business	
	• UNE 2w Loop with NP – Non-Design		Retail Residence and Business	
	• UNE 2w Loop without NP – Non-Design		Retail Residence and Business	
	• UNE Loop Other with NP Non-Design		Retail Residence and Business	
	• UNE Loop Other without NP Non-Design		Retail Residence and Business	
	• UNE Other Non Design		Retail Residence and Business	

APPENDIX D Analogs and Benchmarks				
BST SQM Category	**MEASURES AND SUB-METRICS**	**RESALE** Retail Analogue	**UNES** Retail Analogue	Benchmark*
	• UNE 2w Loop with NP – Design		Retail Residence and Business	
	• UNE 2w Loop without NP – Design		Retail Residence and Business	
	• UNE Loop Other with NP – Design		Retail Design	
	• UNE Loop Other without NP - Design		Retail Design	
	• UNE Other Design		Retail Design	
	• Local Interconnection Trunks	X		
	Percent Missed Installation Appointments			
	• Resale Residence	X		
	• Resale Business	X		
	• Resale Design	X		
	• Resale PBX	X		
	• Resale Centrex	X		
	• Resale IDSN	X		
	• UNE Loop and Port Combos		Retail Residence and Business	
	• UNE 2w Loop with NP – Non-Design		Retail Residence and Business	
	• UNE 2w Loop without NP – Non-Design		Retail Residence and Business	
	• UNE Loop Other with NP Non-Design		Retail Residence and Business	
	• UNE Loop Other without NP Non-Design		Retail Residence and Business	
	• UNE Other Non Design		Retail Residence and Business	
	• UNE 2w Loop with NP – Design		Retail Residence and Business	
	• UNE 2w Loop without NP – Design		Retail Residence and Business	
	• UNE Loop Other with NP – Design		Retail Design	
	• UNE Loop Other without NP – Design		Retail Design	
	• UNE Other Design		Retail Design	
	• Local Interconnection Trunks	X		
	Order Completion Interval			
	• Resale Residence	X		
	• Resale Business	X		
	• Resale Design	X		
	• Resale PBX	X		
	• Resale Centrex	X		
	• Resale IDSN	X		
	• UNE Loop and Port Combos		Retail Residence and Business	
	• UNE 2w Loop with NP – Non-Design		Retail Residence and Business	

APPENDIX D Analogs and Benchmarks				
BST SQM Category	**MEASURES AND SUB-METRICS**	**RESALE** Retail Analogue	**UNES** Retail Analogue	Benchmark*
	• UNE 2w Loop without NP – Non-Design		Retail Residence and Business	
	• UNE Loop Other with NP Non-Design		Retail Residence and Business	
	• UNE Loop Other without NP Non-Design		Retail Residence and Business	
	• UNE Other Non Design		Retail Residence and Business	
	• UNE 2w Loop with NP – Design		Retail Residence and Business	
	• UNE 2w Loop without NP – Design		Retail Residence and Business	
	• UNE Loop Other with NP – Design		Retail Design	
	• UNE Loop Other without NP - Design		Retail Design	
	• UNE Other Design		Retail Design	
	• Local Interconnection Trunks	X		
	Average Completion Notice Interval – Resale POTS (Mech)			
	• Resale Residence	X		
	• Resale Business	X		
	• Resale Design	X		
	• Resale PBX	X		
	• Resale Centrex	X		
	• Resale IDSN	X		
	• UNE Loop and Port Combos		Retail Residence and Business	
	• UNE 2w Loop with NP – Non-Design		Retail Residence and Business	
	• UNE 2w Loop without NP – Non-Design		Retail Residence and Business	
	• UNE Loop Other with NP Non-Design		Retail Residence and Business	
	• UNE Loop Other without NP Non-Design		Retail Residence and Business	
	• UNE Other Non Design		Retail Residence and Business	
	• UNE 2w Loop with NP – Design		Retail Residence and Business	
	• UNE 2w Loop without NP – Design		Retail Residence and Business	
	• UNE Loop Other with NP – Design		Retail Design	
	• UNE Loop Other without NP - Design		Retail Design	
	• UNE Other Design		Retail Design	
	• Local Interconnection Trunks	X		
	Percent Provisioning Troubles within 30 Days			
	• Resale Residence	X		
	• Resale Business	X		
	• Resale Design	X		
	• Resale PBX	X		

APPENDIX D Analogs and Benchmarks				
BST SQM Category	**MEASURES AND SUB-METRICS**	**RESALE** Retail Analogue	**UNES** Retail Analogue	Benchmark*
	• Resale Centrex	X		
	• Resale IDSN	X		
	• UNE Loop and Port Combos		Retail Residence and Business	
	• UNE 2w Loop with NP – Non-Design		Retail Residence and Business	
	• UNE 2w Loop without NP – Non-Design		Retail Residence and Business	
	• UNE Loop Other with NP Non-Design		Retail Residence and Business	
	• UNE Loop Other without NP Non-Design		Retail Residence and Business	
	• UNE Other Non Design		Retail Residence and Business	
	• UNE 2w Loop with NP – Design		Retail Residence and Business	
	• UNE 2w Loop without NP – Design		Retail Residence and Business	
	• UNE Loop Other with NP – Design		Retail Design	
	• UNE Loop Other without NP - Design		Retail Design	
	• UNE Other Design		Retail Design	
	• Local Interconnection Trunks	X		
	Total Service Order Cycle Time	Diag.	Diagnostic	Diagnostic
Maintenance	**Customer Trouble Report Rate**			
	• Resale Residence	X		
	• Resale Business	X		
	• Resale Design	X		
	• Resale PBX	X		
	• Resale Centrex	X		
	• Resale IDSN	X		
	• UNE Loop and Port Combos		Retail Residence and Business	
	• UNE 2w Loop – Non-Design		Retail Residence and Business	
	• UNE Loop Other - Non-Design		Retail Residence and Business	
	• UNE Other Non Design		Retail Residence and Business	
	• UNE 2w Loop – Design		Retail Residence and Business	
	• UNE Loop Other – Design		Retail Design	
	• UNE Other Design		Retail Design	
	• Local Interconnection Trunks	X		
	Percent Missed Repair Appointments			
	• Resale Residence	X		
	• Resale Business	X		
	• Resale Design	X		

APPENDIX D Analogs and Benchmarks				
BST SQM Category	**MEASURES AND SUB-METRICS**	**RESALE** Retail Analogue	**UNES** Retail Analogue	Benchmark*
	• Resale PBX	X		
	• Resale Centrex	X		
	• Resale IDSN	X		
	• UNE Loop and Port Combos		Retail Residence and Business	
	• UNE 2w Loop – Non-Design		Retail Residence and Business	
	• UNE Loop Other - Non-Design		Retail Residence and Business	
	• UNE Other Non Design		Retail Residence and Business	
	• UNE 2w Loop – Design		Retail Residence and Business	
	• UNE Loop Other – Design		Retail Design	
	• UNE Other Design		Retail Design	
	• Local Interconnection Trunks	X		
	Maintenance Average Duration			
	• Resale Residence	X		
	• Resale Business	X		
	• Resale Design	X		
	• Resale PBX	X		
	• Resale Centrex	X		
	• Resale IDSN	X		
	• UNE Loop and Port Combos		Retail Residence and Business	
	• UNE 2w Loop – Non-Design		Retail Residence and Business	
	• UNE Loop Other - Non-Design		Retail Residence and Business	
	• UNE Other Non Design		Retail Residence and Business	
	• UNE 2w Loop – Design		Retail Residence and Business	
	• UNE Loop Other – Design		Retail Design	
	• UNE Other Design		Retail Design	
	• Local Interconnection Trunks	X		
	Percent Repeat Troubles within 30 Days			
	• Resale Residence	X		
	• Resale Business	X		
	• Resale Design	X		
	• Resale PBX	X		
	• Resale Centrex	X		
	• Resale IDSN	X		
	• UNE Loop and Port Combos		Retail Residence and Business	

APPENDIX D Analogs and Benchmarks				
BST SQM Category	**MEASURES AND SUB-METRICS**	**RESALE** Retail Analogue	**UNES** Retail Analogue	Benchmark*
	• UNE 2w Loop – Non-Design		Retail Residence and Business	
	• UNE Loop Other - Non-Design		Retail Residence and Business	
	• UNE Other Non Design		Retail Residence and Business	
	• UNE 2w Loop – Design		Retail Residence and Business	
	• UNE Loop Other – Design		Retail Design	
	• UNE Other Design		Retail Design	
	• Local Interconnection Trunks	X		
	Out of Service > 24hrs			
	• Resale Residence	X		
	• Resale Business	X		
	• Resale Design	X		
	• Resale PBX	X		
	• Resale Centrex	X		
	• Resale IDSN	X		
	• UNE Loop and Port Combos		Retail Residence and Business	
	• UNE 2w Loop – Non-Design		Retail Residence and Business	
	• UNE Loop Other - Non-Design		Retail Residence and Business	
	• UNE Other Non Design		Retail Residence and Business	
	• UNE 2w Loop – Design		Retail Residence and Business	
	• UNE Loop Other – Design		Retail Design	
	• UNE Other Design		Retail Design	
	• Local Interconnection Trunks	X		
	OSS Interface Availability • All systems except ECTA	X		
	• ECTA			99.5%
	OSS Response Interval and % • TAFI (Front End) • CRIS, DLETH, DLR, OSPCM, LMOS, LMOSUP, MARCH, Predictor, SOCS, LNP (Parity by Design)	X PBD		
	Average Answer Time – Repair Center	X		
Billing	**Invoice Accuracy**	X		
	Mean Time To Deliver Invoices	X		
	Usage Data Delivery Accuracy	X		
	Usage Data Delivery Timeliness	X		

APPENDIX D Analogs and Benchmarks				
BST SQM Category	**MEASURES AND SUB-METRICS**	**RESALE** Retail Analogue	**UNES** Retail Analogue	Benchmark*
	Usage Data Delivery Completeness	X		
	Mean Time to Deliver Usage	X		
Operator Services (Toll)	**Average Speed to Answer**	PBD		
	% Answered in "X" Seconds	PBD		
Directory Assistance	**Average Speed to Answer**	PBD		
	% Answered in "X" Seconds	PBD		
E911	**Timelinesss**	PBD		
	Accuracy	PBD		
	Mean Interval	PBD		
Trunk Group Performance (Blockage)	**Trunk Group Service Report (Percent Trunk Blockage)** Any 2 hour period in 24 hours where CLEC blockage exceeds BST blockage by more than 0.5% = a miss using trunk groups 1, 3, 4, 5, 10, 16 for CLECs and 9 for BST.	X		
	Trunk Group Service Report (Percent Trunk Blockage)	X		
LNP	**Average Disconnect Timeliness Interval**			
	Percent Missed Installation Appointments		Retail Residence and Business	
	FOC Mechanized			95% ≤4 hours
	% Reject Service Request **Average Reject Interval Mechanized**		Diagnostic	95% ≤1 hour
	TSOC		Diagnostic	
	% Flow Through			80%
Customer Coordinated Conversions	**Coordinated Customer Conversions – UNE Loop**			95% ≤ 15min
	Coordinated Customer Conversions – LNP			95% ≤ 15 min
Collocation +	**% of Due Dates Missed**			90% ≤ Commit Date
	Average Response Time		FL PSC is addressing this in generic docket	

APPENDIX D Analogs and Benchmarks				
BST SQM Category	**MEASURES AND SUB-METRICS**	**RESALE** Retail Analogue	**UNES** Retail Analogue	Benchmark*
+A contract with each CLEC required.	**Average Arrangement Time**		FL PSC is addressing this in generic docket	

Note 1: PBD = Parity by Design. UD = Under Development – Benchmarks will be replaced when Analogs are complete.

Note2: The retail analog for UNE Non-Design and UNE 2w Loops – Design is the average of Retail Residence Dispatch and Retail Business Dispatch transactions for the particular month. The retail analog for other UNE Design is Retail Design Dispatch.

Note3: Analogs and Benchmarks will be re-evaluated periodically, at least once a year, to validate applicability.

EXHBIT B

VSEEMIII TIER-1 SUBMETRICS

- FOC Timeliness (Mechanized only)
- Reject Interval (Mechanized only)
- Order Completion Interval (Dispatch only) – Resale POTS
- Order Completion Interval (Dispatch only) – Resale Design
- Order Completion Interval (No Dispatch only) – UNE Loop and Port Combos
- Order Completion Interval ('w' code orders, Dispatch only) – UNE Loops
- Order Completion Interval (Dispatch only) – IC Trunks
- Percent Missed Installation Appointments – Resale POTS
- Percent Missed Installation Appointments – Resale Design
- Percent Missed Installation Appointments – UNE Loop and Port Combos
- Percent Missed Installation Appointments – UNE Loops
- Percent Provisioning Troubles within 4 Days - Resale POTS
- Percent Provisioning Troubles within 4 Days - Resale Design
- Percent Provisioning Troubles within 4 Days - UNE Loop and Port Combos
- Percent Provisioning Troubles within 4 Days - UNE Loops
- Customer Trouble Report Rate – Resale POTS
- Customer Trouble Report Rate – Resale Design
- Customer Trouble Report Rate - UNE Loop and Port Combos
- Customer Trouble Report Rate - UNE Loops
- Percent Missed Repair Appointments – Resale POTS
- Percent Missed Repair Appointments - Resale Design
- Percent Missed Repair Appointments - UNE Loop and Port Combos
- Percent Missed Repair Appointments - UNE Loops
- Maintenance Average Duration – Resale POTS
- Maintenance Average Duration – Resale Design
- Maintenance Average Duration - UNE Loop and Port Combos
- Maintenance Average Duration - UNE Loops
- Maintenance Average Duration – IC Trunks
- Percent Repeat Troubles within 30 Days – Resale POTS
- Percent Repeat Troubles within 30 Days – Resale Design
- Percent Repeat Troubles within 30 Days - UNE Loop and Port Combos
- Percent Repeat Troubles within 30 Days - UNE Loops
- Percent Trunk Blockage
- LNP Disconnect Timeliness
- LNP Percent Missed Installation Appointment
- Coordinated Customer Conversions for UNE Loops
- Coordinated Customer Conversions for LNP
- Percent Missed Collocation Due Dates

VSEEMIII TIER-2 SUBMETRICS

- Percent Response Received within "X" seconds – Pre-Order OSS
- OSS Interface Availability
- Order Process Percent Flow-Through (Mechanized only)
- Order Completion Interval (Dispatch only) – Resale POTS
- Order Completion Interval (Dispatch only) – Resale Design
- Order Completion Interval (No Dispatch only) – UNE Loop and Port Combos
- Order Completion Interval ('w' code orders, Dispatch only) – UNE Loops
- Order Completion Interval (Dispatch only) – IC Trunks
- Percent Missed Installation Appointments – Resale POTS
- Percent Missed Installation Appointments – Resale Design
- Percent Missed Installation Appointments – UNE Loop and Port Combos
- Percent Missed Installation Appointments – UNE Loops
- Percent Provisioning Troubles within 4 Days - Resale POTS
- Percent Provisioning Troubles within 4 Days - Resale Design
- Percent Provisioning Troubles within 4 Days - UNE Loop and Port Combos
- Percent Provisioning Troubles within 4 Days - UNE Loops
- Customer Trouble Report Rate – Resale POTS
- Customer Trouble Report Rate – Resale Design
- Customer Trouble Report Rate - UNE Loop and Port Combos
- Customer Trouble Report Rate - UNE Loops
- Percent Missed Repair Appointments – Resale POTS
- Percent Missed Repair Appointments - Resale Design
- Percent Missed Repair Appointments - UNE Loop and Port Combos
- Percent Missed Repair Appointments - UNE Loops
- Maintenance Average Duration – Resale POTS
- Maintenance Average Duration – Resale Design
- Maintenance Average Duration - UNE Loop and Port Combos
- Maintenance Average Duration - UNE Loops
- Maintenance Average Duration – IC Trunks
- Percent Repeat Troubles within 30 Days – Resale POTS
- Percent Repeat Troubles within 30 Days – Resale Design
- Percent Repeat Troubles within 30 Days - UNE Loop and Port Combos
- Percent Repeat Troubles within 30 Days - UNE Loops
- Billing Timeliness
- Billing Accuracy
- Usage Data Delivery Timeliness
- Usage Data Delivery Accuracy
- Percent Trunk Blockage
- LNP Disconnect Timeliness
- LNP Percent Missed Installation Appointment
- Coordinated Customer Conversions for UNE Loops
- Coordinated Customer Conversions for LNP
- Percent Missed Collocation Due Dates

VSEEMIII TIER-3 SUBMETRICS

- Percent Missed Installation Appointments – Resale POTS
- Percent Missed Installation Appointments – Resale Design
- Percent Missed Installation Appointments – UNE Loop and Port Combos
- Percent Missed Installation Appointments – UNE Loops
- Percent Missed Repair Appointments – Resale POTS
- Percent Missed Repair Appointments - Resale Design
- Percent Missed Repair Appointments - UNE Loop and Port Combos
- Percent Missed Repair Appointments - UNE Loops
- Billing Timeliness
- Billing Accuracy
- Percent Trunk Blockage
- Percent Missed Collocation Due Dates

VSEEM III	MEASURES AND SUB-METRICS	RETAIL ANALOGUE Resale (x) and UNEs	BENCH MARK
Pre-Ordering	Percent Response Received within "X" seconds	Retail Analogue + 4 sec	
	OSS Interface Availability	x	
Ordering	Percent Flow-Through Service Request (Fully Mechanized only)		90%
	Firm Order Confirmation Timeliness (Mechanized only)		95% ≤ 4 hrs
	Reject Interval (Mechanized only)		95% ≤ 1 hrs
Provisioning	Order Completion Interval (Dispatch only) – Resale POTS	x	
	Order Completion Interval (Dispatch only) – Resale Design	x	
	Order Completion Interval (No Dispatch only) – UNE Loop & Port Combos	Retail Residence and Business	
	Order Completion Interval (Dispatch only) – UNE Loops	Design: Retail Design Dispatch 'w' Orders Non-Design: Retail Res, Bus Dispatch 'w' Orders	
	Order Completion Interval (Dispatch only) – IC Trunks	x	
	Percent Missed Installation Appointments – Resale POTS	x	
	Percent Missed Installation Appointments – Resale Design	x	
	Percent Missed Installation Appointments – UNE Loop and Port Combos	Retail Residence and Business	
	Percent Missed Installation Appointments – UNE Loops	Design: Retail Design [1] Non-Design: Retail Res, Bus [1]	
	Percent Provisioning Troubles within 4 Days - Resale POTS	x	
	Percent Provisioning Troubles within 4 Days - Resale Design	x	
	Percent Provisioning Troubles within 4 Days - UNE Loop and Port Combos	Retail Residence and Business	
	Percent Provisioning Troubles within 4 Days - UNE Loops	Design: Retail Design [1] Non-Design: Retail Res, Bus [1]	
Maintenance	Customer Trouble Report Rate – Resale POTS	x	
	Customer Trouble Report Rate – Resale Design	x	
	Customer Trouble Report Rate - UNE Loop and Port Combos	Retail Residence and Business	
	Customer Trouble Report Rate - UNE Loops	Design: Retail Design [1] Non-Design: Retail Res, Bus [1]	
	Percent Missed Repair Appointments – Resale POTS	x	
	Percent Missed Repair Appointments - Resale Design	x	
	Percent Missed Repair Appointments - UNE Loop and Port Combos	Retail Residence and Business	
	Percent Missed Repair Appointments - UNE Loops	Design: Retail Design [1] Non-Design: Retail Res, Bus [1]	

NOTES: [1] The retail analog for UNE Non-Design is the average of all retail residence and retail business transactions for the particular month. The retail analog for UNE Design is calculated similarly using retail residence, business and design results.
[2] UD = Under Development

Maintenance Continued	Maintenance Average Duration – Resale POTS	x	
	Maintenance Average Duration – Resale Design	x	
	Maintenance Average Duration - UNE Loop and Port Combos	Retail Residence and Business	
	Maintenance Average Duration - UNE Loops	Design: Retail Design [1] Non-Design: Retail Res, Bus [1]	
	Maintenance Average Duration – IC Trunks	x	
	Percent Repeat Troubles within 30 Days – Resale POTS	x	
	Percent Repeat Troubles within 30 Days – Resale Design	x	
	Percent Repeat Troubles within 30 Days - UNE Loop and Port Combos	Retail Residence and Business	
	Percent Repeat Troubles within 30 Days - UNE Loops	Design: Retail Design [1] Non-Design: Retail Res, Bus [1]	
Billing	Invoice Accuracy	x	
	Mean Time To Deliver Invoices	x	
	Usage Data Delivery Accuracy	x	
	Usage Data Delivery Timeliness	x	
Trunk Blockage	Trunk Group Service Report (Percent Trunk Blockage)	x	
LNP	Average Disconnect Timeliness Interval		UD [2]
	Percent Missed Installation Appointments		UD [2]
CC Conversions	Coordinated Customer Conversions – UNE Loop		95% ≤ 15min
	Coordinated Customer Conversions – LNP		95% ≤ 15 min
Collocation	% of Due Dates Missed		≤ 10%

NOTES: [1] The retail analog for UNE Non-Design is the average of all retail residence and retail business transactions for the particular month. The retail analog for UNE Design is calculated similarly using retail residence, business and design results.
[2] UD = Under Development

EXHIBIT C

Statistical Methods for BellSouth Performance Measure Analysis

I. Necessary Properties for a Test Methodology

The statistical process for testing if competing local exchange carriers (CLECs) customers are being treat equally with BellSouth (BST) customers involves more than just a mathematical formula. Three key elements need to be considered before an appropriate decision process can be developed. These are

- the type of data,
- the type of comparison, and
- the type of performance measure.

Once these elements are determined a test methodology should be developed that complies with the following properties.

- Like-to-Like Comparisons. When possible, data should be compared at appropriate levels, e.g. wire center, time of month, dispatched, residential, new orders. The testing process should:
  - Identify variables that may affect the performance measure.
  - Record these important confounding covariates.
  - Adjust for the observed covariates in order to remove potential biases and to make the CLEC and the ILEC units as comparable as possible.
- Aggregate Level Test Statistic. Each performance measure of interest should be summarized by one overall test statistic giving the decision maker a rule that determines whether a statistically significant difference exists. The test statistic should have the following properties.
  - The method should provide a single overall index, on a standard scale.
  - If entries in comparison cells are exactly proportional over a covariate, the aggregated index should be very nearly the same as if comparisons on the covariate had not been done.
  - The contribution of each comparison cell should depend on the number of observations in the cell.
  - Cancellation between comparison cells should be limited.
  - The index should be a continuous function of the observations.
- Production Mode Process. The decision system must be developed so that it does not require intermediate manual intervention, i.e. the process must be a "black box."
  - Calculations are well defined for possible eventualities.
  - The decision process is an algorithm that needs no manual intervention.
  - Results should be arrived at in a timely manner.
  - The system must recognize that resources are needed for other performance measure-related processes that also must be run in a timely manner.
  - The system should be auditable, and adjustable over time.
- Balancing. The testing methodology should balance Type I and Type II Error probabilities.
  - P(Type I Error) = P(Type II Error) for well defined null and alternative hypotheses.
  - The formula for a test's balancing critical value should be simple enough to calculate using standard mathematical functions, i.e. one should avoid methods that require computationally intensive techniques.

– Little to no information beyond the null hypothesis, the alternative hypothesis, and the number of observations should be required for calculating the balancing critical value.

In the following sections we describe appropriate testing processes that adhere as much as possible to the testing principles.

Measurement Types

The performance measures that will undergo testing are of three types:

1) means
2) proportions, and
3) rates

While all three have similar characteristics (a proportion is the average of a measure that takes on only the values of 0 or 1), a proportion or rate is derived from count data while a mean is generally an average of interval measurements.

II. Testing Methodology – The Truncated Z

Many covariates are chosen in order to provide deep comparison levels. In each comparison cell, a Z statistic is calculated. The form of the Z statistic may vary depending on the performance measure, but it should be distributed approximately as a standard normal, with mean zero and variance equal to one. Assuming that the test statistic is derived so that it is negative when the performance for the CLEC is worse than for the ILEC, a positive truncation is done – i.e. if the result is negative it is left alone, if the result is positive it is changed to zero. A weighted average of the truncated statistics is calculated where a cell weight depends on the volume of BST and CLEC orders in the cell. The weighted average is re-centered by the theoretical mean of a truncated distribution, and this is divided by the standard error of the weighted average. The standard error is computed assuming a fixed effects model.

Proportion Measures

For performance measures that are calculated as a proportion, in each adjustment cell, the truncated Z and the moments for the truncated Z can be calculated in a direct manner. In adjustment cells where proportions are not close to zero or one, and where the sample sizes are reasonably large, a normal approximation can be used. In this case, the moments for the truncated Z come directly from properties of the standard normal distribution. If the normal approximation is not appropriate, then the Z statistic is calculated from the hypergeometric distribution. In this case, the moments of the truncated Z are calculated exactly using the hypergeometric probabilities.

Rate Measures

The truncated Z methodology for rate measures has the same general structure for calculating the Z in each cell as proportion measures. For a rate measure, there are a fixed number of circuits or units for the CLEC, n_{2j} and a fixed number of units for BST, n_{1j}. Suppose that the performance measure is a "trouble rate." The modeling assumption is that the occurrence of a trouble is independent between units and the number of troubles in n circuits follows a Poisson distribution with mean λ n where λ is the probability of a trouble in 1 circuit and n is the number of circuits.

In an adjustment cell, if the number of CLEC troubles is greater than 15 and the number of BST troubles is greater than 15, then the Z test is calculated using the normal approximation to the Poisson. In this case, the moments of the truncated Z come directly from properties of the standard normal distribution. Otherwise, if there are very few troubles, the number of CLEC troubles can be modeled using a binomial distribution with n equal to the total number of troubles (CLEC plus BST troubles.) In this case, the moments for the truncated Z are calculated explicitly using the binomial distribution.

Mean Measures

For mean measures, an adjusted t statistic is calculated for each like-to-like cell which has at least 7 BST and 7 CLEC transactions. A permutation test is used when one or both of the BST and CLEC sample sizes is less than 6. Both the adjusted t statistic and the permutation calculation are described in the technical appendix.

APPENDIX
TECHNICAL DESCRIPTION

We start by assuming that any necessary trimming of the data is complete, and that the data are disaggregated so that comparisons are made within appropriate classes or adjustment cells that define "like" observations.

NOTATION AND EXACT TESTING DISTRIBUTIONS

Below, we have detailed the basic notation for the construction of the truncated z statistic. In what follows the word "cell" should be taken to mean a like-to-like comparison cell that has both one (or more) ILEC observation and one (or more) CLEC observation.

L = the total number of occupied cells

j = 1,…,L; an index for the cells

n_{1j} = the number of ILEC transactions in cell j

n_{2j} = the number of CLEC transactions in cell j

n_j = the total number transactions in cell j; $n_{1j}+ n_{2j}$

X_{1jk} = individual ILEC transactions in cell j; k = 1,…, n_{1j}

X_{2jk} = individual CLEC transactions in cell j; k = 1,…, n_{2j}

Y_{jk} = individual transaction (both ILEC and CLEC) in cell j

$$= \begin{cases} X_{1jk} & k = 1,\mathbb{K}\ , n_{1j} \\ X_{2jk} & k = n_{1j}+1,\mathbb{K}\ , n_j \end{cases}$$

$\Phi^{-1}(\cdot)$ = the inverse of the cumulative standard normal distribution function

For Mean Performance Measures the following additional notation is needed.

$\overline{X}_{1j}$ = the ILEC sample mean of cell j

$\overline{X}_{2j}$ = the CLEC sample mean of cell j

s_{1j}^2 = the ILEC sample variance in cell j

s_{2j}^2 = the CLEC sample variance in cell j

y_{jk} = a random sample of size n_{2j} from the set of $Y_{j1},\mathbb{K}\ , Y_{jn_j}$; k = 1,…,n_{2j}

M_j = the total number of distinct pairs of samples of size n_{1j} and n_{2j};

$$= \binom{n_j}{n_{1j}}$$

The exact parity test is the permutation test based on the "modified Z" statistic. For large samples, we can avoid permutation calculations since this statistic will be normal (or Student's t) to a good approximation. For small samples, where we cannot avoid permutation calculations, we have found that the difference between "modified Z" and the textbook "pooled Z" is negligible. We therefore propose to use the permutation test based on pooled Z for small samples. This decision speeds up the permutation computations considerably, because for each permutation we need only compute the sum of the CLEC sample values, and not the pooled statistic itself.

A permutation probability mass function distribution for cell j, based on the "pooled Z" can be written as

$$PM(t) = P(\sum_{k} y_{jk} = t) = \frac{\textit{the number of samples that sum to } t}{M_j},$$

and the corresponding cumulative permutation distribution is

$$CPM(t) = P(\sum_{k} y_{jk} \le t) = \frac{\textit{the number of samples with sum } \le t}{M_j}.$$

For Proportion Performance Measures the following notation is defined

a_{1j}= the number of ILEC cases possessing an attribute of interest in cell j

a_{2j}= the number of CLEC cases possessing an attribute of interest in cell j

a_j = the number of cases possessing an attribute of interest in cell j; $a_{1j}+ a_{2j}$

The exact distribution for a parity test is the hypergeometric distribution. The hypergeometric probability mass function distribution for cell j is

$$HG(h) = P(H = h) = \begin{cases} \dfrac{\binom{n_{1j}}{h}\binom{n_{2j}}{a_j - h}}{\binom{n_j}{a_j}}, & \max(0, a_j - n_{2j}) \le h \le \min(a_j, n_{1j}) \\ 0 & \text{otherwise} \end{cases},$$

and the cumulative hypergeometric distribution is

$$CHG(x) = P(H \le x) = \begin{cases} 0 & x < \max(0, a_j - n_{1j}) \\ \sum_{h=\max(0, a_j - n_{1j})}^{x} HG(h), & \max(0, a_j - n_{1j}) \le x \le \min(a_j, n_{2j}) \\ 1 & x > \min(a_j, n_{2j}) \end{cases}.$$

For Rate Measures, the notation needed is defined as

b_{1j} = the number of ILEC base elements in cell j

b_{2j} = the number of CLEC base elements in cell j

b_j = the total number of base elements in cell j; $b_{1j}+ b_{2j}$

$\bar{p}_{1j}$ = the ILEC sample rate of cell j; n_{1j}/b_{1j}

$\bar{p}_{2j}$ = the CLEC sample rate of cell j; n_{2j}/b_{2j}

q_j = the relative proportion of CLEC elements for cell j; b_{2j}/b_j

The exact distribution for a parity test is the binomial distribution. The binomial probability mass function distribution for cell j is

$$BN(k) = P(B = k) = \begin{cases} \binom{n_j}{k} q_j^k (1-q_j)^{n_j-k}, & 0 \le k \le n_j \\ 0 & \text{otherwise} \end{cases},$$

and the cumulative binomial distribution is

$$CBN(x) = P(B \le x) = \begin{cases} 0 & x < 0 \\ \sum_{k=0}^{x} BN(k), & 0 \le x \le n_j \\ 1 & x > n_j \end{cases}.$$

CALCULATING THE TRUNCATED Z

The general methodology for calculating an aggregate level test statistic is outlined below.

1. **Calculate cell weights**, W_j. A weight based on the number of transactions is used so that a cell which has a larger number of transactions has a larger weight. The actual weight formulae will depend on the type of measure.

Mean Measure

$$W_j = \sqrt{\frac{n_{1j} n_{2j}}{n_j}}$$

Proportion Measure

$$W_j = \sqrt{\frac{n_{2j} n_{1j}}{n_j} \cdot \frac{a_j}{n_j} \cdot \left(1 - \frac{a_j}{n_j}\right)}$$

Rate Measure

$$W_j = \sqrt{\frac{b_{1j} b_{2j}}{b_j} \cdot \frac{n_j}{b_j}}$$

2. **In each cell, calculate a Z value**, Z_j. A Z statistic with mean 0 and variance 1 is needed for each cell.

- If $W_j = 0$, set $Z_j = 0$.
- Otherwise, the actual Z statistic calculation depends on the type of performance measure.

Mean Measure

$$Z_j = \Phi^{-1}(\alpha)$$

where α is determine by the following algorithm.

If $\min(n_{1j}, n_{2j}) > 6$, then determine α as

$$\alpha = P(t_{n_{1j}-1} \le T_j),$$

that is, α is the probability that a t random variable with n_{1j} - 1 degrees of freedom, is less than

$$T_j = t_j + \frac{g}{6}\left(\frac{n_{1j} + 2n_{2j}}{\sqrt{n_{1j}\, n_{2j}(n_{1j} + n_{2j})}}\right)\left(t^2 + \frac{n_{2j} - n_{1j}}{2n_{1j} + n_{2j}}\right),$$

where

$$t_j = \frac{\bar{X}_{1j} - \bar{X}_{2j}}{s_{1j}\sqrt{\frac{1}{n_{1j}} + \frac{1}{n_{2j}}}}$$

and the coefficient g is an estimate of the skewness of the parent population, which we assume is the same in all cells. It can be estimated from the ILEC values in the largest cells. This needs to be done only once for each measure. We have found that attempting to estimate this skewness parameter for each cell separately leads to excessive variability in the "adjusted" t. We therefore use a single compromise value in all cells.

Note, that t_j is the "modified Z" statistic. The statistic T_j is a "modified Z" corrected for the skewness of the ILEC data.

If $\min(n_{1j}, n_{2j}) \le 6$, and

a) $M_j \le 1{,}000$ (the total number of distinct pairs of samples of size n_{1j} and n_{2j} is 1,000 or less).

- Calculate the sample sum for all possible samples of size n_{2j}.
- Rank the sample sums from smallest to largest. Ties are dealt by using average ranks.
- Let R_0 be the rank of the observed sample sum with respect all the sample sums.

$$\alpha = 1 - \frac{R_0 - 0.5}{M_j}$$

b) $M_j > 1{,}000$

- Draw a random sample of 1,000 sample sums from the permutation distribution.
- Add the observed sample sum to the list. There is a total of 1001 sample sums. Rank the sample sums from smallest to largest. Ties are dealt by using average ranks.
- Let R_0 be the rank of the observed sample sum with respect all the sample sums.

$$\alpha = 1 - \frac{R_0 - 0.5}{1001}.$$

Proportion Measure

$$Z_j = \frac{n_j\, a_{1j} - n_{1j}\, a_j}{\sqrt{\frac{n_{1j}\, n_{2j}\, a_j\, (n_j - a_j)}{n_j - 1}}}.$$

Rate Measure

$$Z_j = \frac{n_{1j} - n_j\, q_j}{\sqrt{n_j\, q_j (1-q_j)}}.$$

3. **Obtain a truncated Z value for each cell**, Z_j^*. To limit the amount of cancellation that takes place between cell results during aggregation, cells whose results suggest possible favoritism are left alone. Otherwise the cell statistic is set to zero. This means that positive equivalent Z values are set to 0, and negative values are left alone. Mathematically, this is written as

$$Z_j^* = \min(0, Z_j).$$

4. **Calculate the theoretical mean and variance of the truncated statistic under the null hypothesis of parity**, $E(Z_j^* | H_0)$ and $Var(Z_j^* | H_0)$. In order to compensate for the truncation in step 3, an aggregated, weighted sum of the Z_j^* will need to be centered and scaled properly so that the final aggregate statistic follows a standard normal distribution.

   - If W_j = 0, then no evidence of favoritism is contained in the cell. The formulae for calculating $E(Z_j^* | H_0)$ and $Var(Z_j^* | H_0)$ cannot be used. Set both equal to 0.

   - If min(n_{1j}, n_{2j}) > 6 for a mean measure, $\min\left\{a_{1j}\left(1-\frac{a_{1j}}{n_{1j}}\right), a_{2j}\left(1-\frac{a_{2j}}{n_{2j}}\right)\right\} > 9$ for a proportion measure, or $\min\left(n_{1j}, n_{2j}\right) > 15$ and $n_j q_j (1-q_j) > 9$ for a rate measure then

$$E(Z_j^* | H_0) = -\frac{1}{\sqrt{2\pi}}, \text{ and}$$

$$Var(Z_j^* | H_0) = \frac{1}{2} - \frac{1}{2\pi}.$$

   - Otherwise, determine the total number of values for Z_j^*. Let z_{ji} and θ_{ji}, denote the values of Z_j^* and the probabilities of observing each value, respectively.

$$E(Z_j^* | H_0) = \sum_i \theta_{ji} z_{ji}, \text{and}$$

$$Var(Z_j^* | H_0) = \sum_i \theta_{ji} z_{ji}^2 - \left[E(Z_j^* | H_0)\right]^2.$$

The actual values of the z's and θ's depends on the type of measure, and the sums in the equations are over all possible values of the index i.

Mean Measure

$$N_j = \min(M_j, 1{,}000), \quad i = 1, \ldots, N_j$$

$$z_{ji} = \min\left\{0, 1 - \Phi^{-1}\left(\frac{R_i - 0.5}{N_j}\right)\right\} \quad \text{where } R_i \text{ is the rank of sample sum i}$$

$$\theta_j = \frac{1}{N_j}$$

Proportion Measure

$$z_{ji} = \min\left\{0, \frac{n_j\, i - n_{1j}\, a_j}{\sqrt{\frac{n_{1j}\, n_{2j}\, a_j\, (n_j - a_j)}{n_j - 1}}}\right\}, \quad i = \min(a_j, n_{2j}), \ldots, \max(0, a_j - n_{1j})$$

$$\theta_{ji} = HG(i)$$

Rate Measure

$$z_{ji} = \min\left\{0, \frac{i - n_j\, q_j}{\sqrt{n_j\, q_j (1 - q_j)}}\right\}, \quad i = 0, \ldots, n_j$$

$$\theta_{ji} = BN(i)$$

5. **Calculate the aggregate test statistic**, Z^T.

$$Z^T = \frac{\sum_j W_j Z_j^* - \sum_j W_j E(Z_j^* \mid H_0)}{\sqrt{\sum_j W_j^2 \mathrm{Var}(Z_j^* \mid H_0)}}$$

The Balancing Critical Value

There are four key elements of the statistical testing process:

1. the null hypothesis, H_0, that parity exists between ILEC and CLEC services
2. the alternative hypothesis, H_a, that the ILEC is giving better service to its own customers
3. the Truncated Z test statistic, Z^T, and
4. a critical value, *c*

The decision rule[1] is

- If $Z^T < c$ then accept H_a.
- If $Z^T \geq c$ then accept H_0.

There are two types of error possible when using such a decision rule:

[1] This decision rule assumes that a negative test statistic indicates poor service for the CLEC customer. If the opposite is true, then reverse the decision rule.

Type I Error: Deciding favoritism exists when there is, in fact, no favoritism.
Type II Error: Deciding parity exists when there is, in fact, favoritism.

The probabilities of each type of each are:

Type I Error: $\alpha = P(Z^T < c \mid H_0)$.

Type II Error: $\beta = P(Z^T \geq c \mid H_a)$.

We want a balancing critical value, c_B, so that $\alpha = \beta$.

It can be shown that.

$$c_B = \frac{\sum_j W_j M(m_j, se_j) - \sum_j W_j \frac{-1}{\sqrt{2\pi}}}{\sqrt{\sum_j W_j^2 V(m_j, se_j)} + \sqrt{\sum_j W_j^2 \left(\frac{1}{2} - \frac{1}{2\pi}\right)}}.$$

where

$$M(\mu, \sigma) = \mu \Phi(\tfrac{-\mu}{\sigma}) - \sigma \phi(\tfrac{-\mu}{\sigma})$$

$$V(\mu, \sigma) = (\mu^2 + \sigma^2)\Phi(\tfrac{-\mu}{\sigma}) - \mu\sigma\phi(\tfrac{-\mu}{\sigma}) - M(\mu, \sigma)^2$$

$\Phi(\cdot)$ is the cumulative standard normal distribution function, and $\phi(\cdot)$ is the standard normal density function.

This formula assumes that Z_j is approximately normally distributed within cell j. When the cell sample sizes, n_{1j} and n_{2j}, are small this may not be true. It is possible to determine the cell mean and variance under the null hypothesis when the cell sample sizes are small. It is much more difficult to determine these values under the alternative hypothesis. Since the cell weight, W_j will also be small (see calculate weights section above) for a cell with small volume, the cell mean and variance will not contribute much to the weighted sum. Therefore, the above formula provides a reasonable approximation to the balancing critical value.

The values of m_j and se_j will depend on the type of performance measure.

Mean Measure

For mean measures, one is concerned with two parameters in each cell, namely, the mean and variance. A possible lack of parity may be due to a difference in cell means, and/or a difference in cell variances. One possible set of hypotheses that capture this notion, and take into account the assumption that transaction are identically distributed within cells is:

H_0: $\mu_{1j} = \mu_{2j}$, $\sigma_{1j}^2 = \sigma_{2j}^2$

H_a: $\mu_{2j} = \mu_{1j} + \delta_j \cdot \sigma_{1j}$, $\sigma_{2j}^2 = \lambda_j \cdot \sigma_{1j}^2$ $\qquad$ $\delta_j > 0$, $\lambda_j \geq 1$ and j = 1,…,L.

Under this form of alternative hypothesis, the cell test statistic Z_j has mean and standard error given by

$$m_j = \frac{-\delta_j}{\sqrt{\frac{1}{n_{1j}} + \frac{1}{n_{2j}}}}, \text{ and}$$

$$se_j = \sqrt{\frac{\lambda_j n_{1j} + n_{2j}}{n_{1j} + n_{2j}}}$$

Proportion Measure

For a proportion measure there is only one parameter of interest in each cell, the proportion of transaction possessing an attribute of interest. A possible lack of parity may be due to a difference in cell proportions. A set of hypotheses that take into account the assumption that transaction are identically distributed within cells while allowing for an analytically tractable solution is:

$$H_0: \frac{p_{2j}(1-p_{1j})}{(1-p_{2j})p_{1j}} = 1$$

$$H_a: \frac{p_{2j}(1-p_{1j})}{(1-p_{2j})p_{1j}} = \psi_j \qquad \psi_j > 1 \text{ and } j = 1,\ldots,L.$$

These hypotheses are based on the "odds ratio." If the transaction attribute of interest is a missed trouble repair, then an interpretation of the alternative hypothesis is that a CLEC trouble repair appointment is ψ_j times more likely to be missed than an ILEC trouble.

Under this form of alternative hypothesis, the within cell asymptotic mean and variance of a_{1j} are given by[2]

$$E(a_{1j}) = n_j \pi_j^{(1)}$$

$$var(a_{1j}) = \frac{n_j}{\frac{1}{\pi_j^{(1)}} + \frac{1}{\pi_j^{(2)}} + \frac{1}{\pi_j^{(3)}} + \frac{1}{\pi_j^{(4)}}}$$

where

[2] Stevens, W. L. (1951) Mean and Variance of an entry in a Contingency Table. *Biometrica*, **38**, 468-470.

$$\pi_j^{(1)} = f_j^{(1)}\left(n_j^2 + f_j^{(2)} + f_j^{(3)} - f_j^{(4)}\right)$$
$$\pi_j^{(2)} = f_j^{(1)}\left(-n_j^2 - f_j^{(2)} + f_j^{(3)} + f_j^{(4)}\right)$$
$$\pi_j^{(3)} = f_j^{(1)}\left(-n_j^2 + f_j^{(2)} - f_j^{(3)} + f_j^{(4)}\right)$$
$$\pi_j^{(4)} = f_j^{(1)}\left(n_j^2\left(\tfrac{2}{\psi_j}-1\right) - f_j^{(2)} - f_j^{(3)} - f_j^{(4)}\right)$$
$$f_j^{(1)} = \frac{1}{2n_j^2\left(\frac{1}{\psi_j}-1\right)}$$
$$f_j^{(2)} = n_j n_{1j}\left(\tfrac{1}{\psi_j}-1\right)$$
$$f_j^{(3)} = n_j a_j\left(\tfrac{1}{\psi_j}-1\right)$$
$$f_j^{(4)} = \sqrt{n_j^2\left[4n_{1j}\left(n_j - a_j\right)\left(\tfrac{1}{\psi_j}-1\right) + \left(n_j + \left(a_j - n_{1j}\right)\left(\tfrac{1}{\psi_j}-1\right)\right)^2\right]}$$

Recall that the cell test statistic is given by

$$Z_j = \frac{n_j\, a_{1j} - n_{1j}\, a_j}{\sqrt{\frac{n_{1j}\, n_{2j}\, a_j\,(n_j - a_j)}{n_j - 1}}}.$$

Using the equations above, we see that Z_j has mean and standard error given by

$$m_j = \frac{n_j^2\pi_j^{(1)} - n_{1j}\, a_j}{\sqrt{\frac{n_{1j}\, n_{2j}\, a_j\,(n_j - a_j)}{n_j - 1}}}, \text{ and}$$

$$se_j = \sqrt{\frac{n_j^3(n_j - 1)}{n_{1j}\, n_{2j}\, a_j\,(n_j - a_j)\left(\frac{1}{\pi_j^{(1)}} + \frac{1}{\pi_j^{(2)}} + \frac{1}{\pi_j^{(3)}} + \frac{1}{\pi_j^{(4)}}\right)}}.$$

Rate Measure

A rate measure also has only one parameter of interest in each cell, the rate at which a phenomenon is observed relative to a base unit, e.g. the number of troubles per available line. A possible lack of parity may be due to a difference in cell rates. A set of hypotheses that take into account the assumption that transaction are identically distributed within cells is:

H_0: $r_{1j} = r_{2j}$

H_a: $r_{2j} = \varepsilon_j r_{1j}$ $\qquad \varepsilon_j > 1$ and $j = 1,\ldots,L$.

Given the total number of ILEC and CLEC transactions in a cell, n_j, and the number of base elements, b_{1j} and b_{2j}, the number of ILEC transaction, n_{1j}, has a binomial distribution from n_j trials and a probability of

$$q_j^* = \frac{r_{1j} b_{1j}}{r_{1j} b_{1j} + r_{2j} b_{2j}}.$$

Therefore, the mean and variance of n_{1j}, are given by

$$E(n_{1j}) = n_j q_j^*$$
$$\text{var}(n_{1j}) = n_j q_j^* (1 - q_j^*)$$

Under the null hypothesis

$$q_j^* = q_j = \frac{b_{1j}}{b_j},$$

but under the alternative hypothesis

$$q_j^* = q_j^a = \frac{b_{1j}}{b_{1j} + \varepsilon_j b_{2j}}.$$

Recall that the cell test statistic is given by

$$Z_j = \frac{n_{1j} - n_j q_j}{\sqrt{n_j q_j (1 - q_j)}}.$$

Using the relationships above, we see that Z_j has mean and standard error given by

$$m_j = \frac{n_j (q_j^a - q_j)}{\sqrt{n_j q_j (1 - q_j)}} = (1 - \varepsilon_j) \sqrt{\frac{n_j b_{1j} b_{2j}}{b_{1j} + \varepsilon_j b_{2j}}}, \text{ and}$$

$$se_j = \sqrt{\frac{q_j^a (1 - q_j^a)}{q_j (1 - q_j)}} = \sqrt{\varepsilon_j} \frac{b_j}{b_{1j} + \varepsilon_j b_{2j}}.$$

Determining the Parameters of the Alternative Hypothesis

In this appendix we have indexed the alternative hypothesis of mean measures by two sets of parameters, λ_j and δ_j. Proportion and rate measures have been indexed by one set of parameters each, ψ_j and ε_j respectively. While statistical science can be used to evaluate the impact of different choices of these parameters, there is not much that an appeal to statistical principles can offer in directing specific choices. Specific choices are best left to telephony experts. Still, it is possible to comment on some aspects of these choices:

- Parameter Choices for λ_j. The set of parameters λ_j index alternatives to the null hypothesis that arise because there might be greater unpredictability or variability in the delivery of service to a CLEC customer over that which would be achieved for an otherwise comparable ILEC customer. While concerns about differences in the variability of service are important, it turns out that the truncated Z testing which is being recommended here is relatively insensitive to all but very large values of the λ_j. Put another way, reasonable differences in the values chosen here could make very little difference in the balancing points chosen.

- Parameter Choices for δ_j. The set of parameters δ_j are much more important in the choice of the balancing point than was true for the λ_j. The reason for this is that they directly index differences in average service. The truncated Z test is very sensitive to any such differences; hence, even small disagreements among experts in the choice of the δ_j could be very important. Sample size matters here too. For example, setting all the δ_j to a single value – $\delta_j = \delta$ – might be fine for tests across individual CLECs where currently in Louisiana the CLEC customer bases are not too different. Using the same value of δ for the overall state testing does not seem sensible, however, since the state sample would be so much larger.

- Parameter Choices for ψ_j or ε_j. The set of parameters ψ_j or ε_j are also important in the choice of the balancing point for tests of their respective measures. The reason for this is that they directly index increases in the proportion or rate of service performance. The truncated Z test is sensitive to such increases; but not as sensitive as the case of δ_j for mean measures. Sample size matters here as well. As with mean measures, using the same value of ψ or ε for the overall state testing does not seem sensible since the state sample would be so much larger.

The bottom line here is that beyond a few general considerations, like those given above, a principled approach to the choice of the alternative hypotheses to guard against, must come from elsewhere.

DECISION PROCESS

Once Z^T has been calculated, it is compared to the balancing critical value to determine if the ILEC is favoring its own customers over a CLEC's customers.

This critical value changes as the ILEC and CLEC transaction volume change. One way to make this transparent to the decision maker, is to report the difference between the test statistic and the critical value, $diff = Z^T - c_B$. If favoritism is concluded when $Z^T < c_B$, then the $diff < 0$ indicates favoritism.

This make it very easy to determine favoritism: a positive *diff* suggests no favoritism, and a negative *diff* suggests favoritism.

EXHIBIT D

BST VSEEM REMEDY PROCEDURE

TIER-1 CALCULATION FOR RETAIL ANALOGUES:

1. Calculate the overall test statistic for each CLEC; z^T_{CLEC1} (See Exhibit C)
2. Calculate the balancing critical value($^{c}B_{CLEC1}$) that is associated with the alternative hypothesis (for fixed parameters δ, ψ or ε). (See Exhibit C)
3. If the overall test statistic is equal to or above the balancing critical value, stop here. Otherwise, go to step 4.
4. Calculate the Parity Gap by subtracting the value of step 2. from that of step 1.; $z^T_{CLEC1} - {}^{c}B_{CLEC1}$
5. Calculate the Volume Proportion using a linear distribution with slope of ¼. This can be accomplished by taking the absolute value of the Parity Gap from step 4. divided by 4; $ABS((z^T_{CLEC1} - {}^{c}B_{CLEC1}) / 4)$. All parity gaps equal or greater to 4 will result in a volume proportion of 100%.
6. Calculate the Affected Volume by multiplying the Volume Proportion from step 5. by the Total $CLEC_1$ Volume in the negatively affected cell; where the cell value is negative. (See Exhibit C)
7. Calculate the payment to CLEC-1 by multiplying the result of step 6. by the appropriate dollar amount from the fee schedule.

So, CLEC-1 payment = Affected $Volume_{CLEC1}$ * $$ from Fee Schedule

Example: CLEC-1 Missed Installation Appointments (MIA) for Resale POTS

	n_I	n_C	MIA_I	MIA_C	z^T_{CLEC1}	C_B	**Parity Gap**	Volume Proportion	Affected Volume
State	50000	600	9%	16%	-1.92	-0.21	**1.71**	0.4275	
Cell					z_{CLEC1}				
1		150	0.091	0.112	-1.994				64
2		75	0.176	0.098	0.734				
3		10	0.128	0.333	-2.619				4
4		50	0.158	0.242	-2.878				21
5		15	0.245	0.075	1.345				
6		200	0.156	0.130	0.021				
7		30	0.166	0.233	-0.600				13
8		20	0.106	0.127	-0.065				9
9		40	0.193	0.218	-0.918				17
10		10	0.160	0.235	-0.660				4
									133

where n_I = ILEC observations and n_C = CLEC-1 observations

Payout for CLEC-1 is (133 units) * ($100/unit) = $13,300

TIER-2 CALCULATION for RETAIL ANALOGUES:

1. Tier-2 is triggered by three monthly failures of any VSEEM submetric in the same quarter.

2. Calculate the overall test statistic for the CLEC Aggregate using all transactions from the calendar quarter; z^T_{CLECA}

3. Calculate the balancing critical value($c_{B\ CLEC1}$) that is associated with the alternative hypothesis (for fixed parameters δ, ψ or ε). (See Exhibit C)

4. If the overall test statistic is equal to or above the balancing critical value for the calendar quarter, stop here. Otherwise, go to step 5.

5. Calculate the Parity Gap by subtracting the value of step 3. from that of step 2.; $z^T_{CLECA} - c_{B\ CLECA}$

6. Calculate the Volume Proportion using a linear distribution with slope of ¼. This can be accomplished by dividing the Parity Gap from step 5. by 4; ABS(($z^T_{CLECA} - c_{B\ CLECA}$) / 4). All parity gaps equal or greater to 4 will result in a volume proportion of 100%.

7. Calculate the Affected Volume by multiplying the Volume Proportion from step 6. by the Total $CLEC_A$ Volume (CLEC Aggregate) in the negatively affected cell; where the cell value is negative (See Exhibit C).

8. Calculate the payment to State Designated Agency by multiplying the result of step 7. by the appropriate dollar amount from the fee schedule.

   So, State Designated Agency payment = Affected $Volume_{CLECA}$ * $$ from Fee Schedule

Example: CLEC-A Missed Installation Appointments (MIA) for Resale POTS

State	n_I	n_C	MIA_I	MIA_C	z^T_{CLECA}	C_B	**Parity Gap**	Volume Proportion	Affected Volume
Quarter1	180000	2100	9%	16%	-1.92	-0.21	**1.71**	0.4275	
Cell					z_{CLECA}				
1		500	0.091	0.112	-1.994				214
2		300	0.176	0.098	0.734				
3		80	0.128	0.333	-2.619				34
4		205	0.158	0.242	-2.878				88
5		45	0.245	0.075	1.345				
6		605	0.156	0.130	0.021				

7	80	0.166	0.233	-0.600	34
8	40	0.106	0.127	-0.065	17
9	165	0.193	0.218	-0.918	71
10	80	0.160	0.235	-0.660	34
					492

where n_I = ILEC observations and n_C = CLEC-A observations

Payout for CLEC-A is (492 units) * ($300/unit) = $147,600

Tier-3

Tier-3 uses the monthly CLEC Aggregate results in a given State. Tier-3 is triggered when five of the twelve Tier-3 sub-metrics experience consecutive failures in a given calendar quarter. The table below displays a situation that would trigger a Tier-3 failure, and one that would not.

		TIER-3 FAILURE X = Miss			NOT A TIER-3 FAILURE X = Miss		
Process	**Measures**	Jan	Feb	Mar	Jan	Feb	Mar
Percent Missed Installation Appointments	Resale POTS	X	X	X	X		
	Resale Design	X			X	X	X
	UNE Loop & Port Combo		X				
	UNE Loops	X	X	X			
Percent Missed Repair Appointments	Resale POTS	X	X	X	X		X
	Resale Design		X	X		X	
	UNE Loop & Port Combo					X	X
	UNE Loops				X		
Billing	Billing Accuracy	X	X	X			
	Billing Timeliness				X	X	X
Trunk Blockage	Percent Trunk Blockage	X	X	X			
Collocation	Percent Missed Collocation Due Dates						

Tier-3 is effective immediately after quarter results, and can only be lifted when two of the five failed sub-metrics show compliance for two consecutive months in the following quarter.

All tiers standalone, such that triggering Tier-3 will not cease payout of any Tier-1 or Tier-2 failures.

TIER-1 CALCULATION FOR BENCHMARKS:

1. For each CLEC, with five or more observations, calculate monthly performance results for the State.

2. CLECs having observations (sample sizes) between 5 and 30 will use Table I below:

TABLE I SMALL SAMPLE SIZE TABLE
(95% Confidence)

Sample Size	Equivalent 90% Benchmark	Equivalent 95% Benchmark
5	60.00%	80.00%
6	66.67%	83.33%
7	71.43%	85.71%
8	75.00%	75.00%
9	66.67%	77.78%
10	70.00%	80.00%
11	72.73%	81.82%
12	75.00%	83.33%
13	76.92%	84.62%
14	78.57%	85.71%
15	73.33%	86.67%

Sample Size	Equivalent 90% Benchmark	Equivalent 95% Benchmark
16	75.00%	87.50%
17	76.47%	82.35%
18	77.78%	83.33%
19	78.95%	84.21%
20	80.00%	85.00%
21	76.19%	85.71%
22	77.27%	86.36%
23	78.26%	86.96%
24	79.17%	87.50%
25	80.00%	88.00%
26	80.77%	88.46%
27	81.48%	88.89%
28	78.57%	89.29%
29	79.31%	86.21%
30	80.00%	86.67%

3. If the percentage (or equivalent percentage for small samples) is equal to or below the benchmark standard, stop here. Otherwise, go to step 4.

4. Determine the Volume Proportion by taking the difference between the benchmark and the actual performance result.

5. Calculate the Affected Volume by multiplying the Volume Proportion from step 4. by the Total $CLEC_1$ Volume.

6. Calculate the payment to CLEC-1 by multiplying the result of step 5. by the appropriate dollar amount from the fee schedule.

So, CLEC-1 payment = Affected $Volume_{CLEC1}$ * $$ from Fee Schedule

Example: CLEC-1 Missed Installation Appointments (MIA) for UNE Loops

	n_C	Benchmark	MIA_C	Volume Proportion	Affected Volume
State	600	9%	12%	.03	18

Payout for CLEC-1 is (18 units) * ($400/unit) = $7,200

TIER-1 CALCULATION FOR BENCHMARKS (IN THE FORM OF A TARGET):

1. For each, with five or more observations, CLEC calculate monthly performance results for the State.

2. CLECs having observations (sample sizes) between 5 and 30 will use Table I above.

3. Calculate the interval distribution based on the same data set used in step 1.

4. If the 'percent within' is equal to or exceeds the benchmark standard, stop here. Otherwise, go to step 5.

5. Determine the Volume Proportion by taking the difference between 100% and the actual performance result.

6. Calculate the Affected Volume by multiplying the Volume Proportion from step 5. by the Total $CLEC_1$ Volume.

7. Calculate the payment to CLEC-1 by multiplying the result of step 6. by the appropriate dollar amount from the fee schedule.

So, CLEC-1 payment = Affected $Volume_{CLEC1}$ * $$ from Fee Schedule

Example: CLEC-1 Reject Timeliness

	n_C	Benchmark	Reject $Timeliness_C$	Volume Proportion	Affected Volume
State	600	95% within 1 hour	93% within 1 hour	.07	42

Payout for CLEC-1 is (42 units) * ($100/unit) = $4,200

TIER-2 CALCULATIONS for BENCHMARKS:

Tier-2 calculations for benchmark measures are the same as the Tier-1 benchmark calculations except the CLEC Aggregate data having failed for three months in a given calendar quarter is being assessed.

EXHIBIT E

Table-1

LIQUIDATED DAMAGES TABLE FOR TIER-1 MEASURES

PER AFFECTED ITEM						
	Month 1	Month 2	Month3	Month4	Month 5	Month 6
Ordering	$40	$50	$60	$70	$80	$90
Provisioning	$100	$125	$175	$250	$325	$500
Provisioning UNE (Coordinated Customer Conversions)	$400	$450	$500	$550	$650	$800
Maintenance and Repair	$100	$125	$175	$250	$325	$500
Maintenance and Repair UNE	$400	$450	$500	$550	$650	$800
LNP	$150	$250	$500	$600	$700	$800
IC Trunks	$100	$125	$175	$250	$325	$500
Collocation	$5,000	$5,000	$5,000	$5,000	$5,000	$5,000

Table-2

VOLUNTARY PAYMENTS FOR TIER-2 MEASURES

	Per Affected Item
OSS Pre-Ordering	$20
Ordering	$60
Provisioning	$300
UNE Provisioning (Coordinated Customer Conversions)	$875
Maintenance and Repair	$300
UNE Maintenance and Repair	$875
Billing	$1.00
LNP	$500
IC Trunks	$500
Collocation	$15,000

AGREEMENT IMPLEMENTATION TEMPLATE (Residence)
for
ACCESS Integrated Networks, Inc.
BellSouth Standard Interconnection Agreement

Agreement Effective Date:	**Agreement Expiration Date:**
Account Manager:	**Account Manager Tel No:**

Attachment Name/Number	**Section Number**	**Version Date**	**Planned Activities**
Terms/Conditions PartA	1	2/29/00	
	2	2/29/00	
	3	2/29/00	
	4	2/29/00	
	5	2/29/00	
	6	2/29/00	
	7	2/29/00	
	8	2/29/00	
	9	2/29/00	
	10	2/29/00	
	11	2/29/00	
	12	2/29/00	
	13	2/29/00	
	14	2/29/00	
	15	2/29/00	
	16	2/29/00	
	17	2/29/00	
	18	2/29/00	
	19	2/29/00	
	20	2/29/00	
	21	2/29/00	
	22	2/29/00	
	23	2/29/00	
	24	2/29/00	
	25	2/29/00	
	26	2/29/00	
Terms/Conditions Part B		2/29/00	
1-Resale	1	2/29/00	

AGREEMENT IMPLEMENTATION TEMPLATE (Residence)
for
ACCESS Integrated Networks, Inc.
BellSouth Standard Interconnection Agreement

Attachment Name/Number	Section Number	Version Date	Planned Activities
	2	2/29/00	
	3	2/29/00	
	4	2/29/00	
	5	2/29/00	
	6	2/29/00	
	7	2/29/00	
	8	2/29/00	
	9	2/29/00	
	10	2/29/00	
	11	2/29/00	
	12	2/29/00	
	13	2/29/00	
	Exhibit A	2/29/00	
	Exhibit B	2/29/00	
	Exhibit C	2/29/00	
	Exhibit D	2/29/00	
	Exhibit E	2/29/00	
	Exhibit F	2/29/00	
	Exhibit G	2/29/00	
		2/29/00	
2-Network Elements & Other Services	1	2/29/00	
	2	2/29/00	
	3	2/29/00	
	4	2/29/00	
	5	2/29/00	
	6	2/29/00	
	7	2/29/00	
	8	2/29/00	
	9	2/29/00	
	10	2/29/00	

AGREEMENT IMPLEMENTATION TEMPLATE (Residence)
for
ACCESS Integrated Networks, Inc.
BellSouth Standard Interconnection Agreement

Attachment Name/Number	Section Number	Version Date	Planned Activities
	11	2/29/00	
	12	2/29/00	
	13	2/29/00	
	14	2/29/00	
	15	2/29/00	
	16	2/29/00	
	17	2/29/00	
	Exhibit A	2/29/00	
	Exhibit B	2/29/00	
	Exhibit C	2/29/00	
3-Local Interconnection	1	2/29/00	
	2	2/29/00	
	3	2/29/00	
	4	2/29/00	
	5	2/29/00	
	6	2/29/00	
	7	2/29/00	
	8	2/29/00	
	Exhibit A	2/29/00	
	Exhibit B	2/29/00	
	Exhibit C	2/29/00	
	Exhibit D	2/29/00	
	Exhibit E	2/29/00	
4-Physical Collocation	1	2/29/00	
	2	2/29/00	
	3	2/29/00	
	4	2/29/00	
	5	2/29/00	
	6	2/29/00	
	7	2/29/00	
	8	2/29/00	

AGREEMENT IMPLEMENTATION TEMPLATE (Residence)
for
ACCESS Integrated Networks, Inc.
BellSouth Standard Interconnection Agreement

Attachment Name/Number	Section Number	Version Date	Planned Activities
	9	2/29/00	
	10	2/29/00	
	11	2/29/00	
	12	2/29/00	
	13	2/29/00	
	14	2/29/00	
	Exhibit A	2/29/00	
	Exhibit B	2/29/00	
5-Access to Numbers & Number Portability	1	2/29/00	
	2	2/29/00	
	3	2/29/00	
	4	2/29/00	
	5	2/29/00	
	6	2/29/00	
	7	2/29/00	
	8	2/29/00	
	Exhibit A	2/29/00	
6-Ordering/Provisioning	1	2/29/00	
	2	2/29/00	
	3	2/29/00	
7-Billing & Billing Accuracy Certification	1	2/29/00	
	2	2/29/00	
	3	2/29/00	
	4	2/29/00	
	5	2/29/00	
	6	2/29/00	
	7	2/29/00	
	Exhibit A	2/29/00	
8-ROW/Conduits/PoleAtt	1	2/29/00	

AGREEMENT IMPLEMENTATION TEMPLATE (Residence)
for
ACCESS Integrated Networks, Inc.
BellSouth Standard Interconnection Agreement

Attachment Name/Number	Section Number	Version Date	Planned Activities
9-Perf Measurement	Pre-Ordering	2/29/00	
	Ordering	2/29/00	
	Provisioning	2/29/00	
	Maint/Repair	2/29/00	
	Billing	2/29/00	
	Opr Svcs/DA	2/29/00	
	E911	2/29/00	
	Trunk Grp Perf	2/29/00	
	Collocation	2/29/00	
	Appendix A	2/29/00	
	Appendix B	2/29/00	
	Appendix C	2/29/00	
10-Executive Summary		2/29/00	
		2/29/00	
11-Disaster Recovery		2/29/00	
		2/29/00	

AGREEMENT IMPLEMENTATION TEMPLATE (Business)
for
ACCESS Integrated Networks, Inc.
BellSouth Standard Interconnection Agreement

Agreement Effective Date:	**Agreement Expiration Date:**
Account Manager:	**Account Manager Tel No:**

Attachment Name	**Section No.**	**Version Date**	**Planned Activities**
Terms/Conditions PartA	1		
	2		
	3		
	4		
	5		
	6		
	7		
	8		
	9		
	10		
	11		
	12		
	13		
	14		
	15		
	16		
	17		
	18		
	19		
	20		
	21		
	22		
	23		
	24		
	25		
	26		
Terms/Conditions Part B			
1-Resale	1		

AGREEMENT IMPLEMENTATION TEMPLATE (Business)
for
ACCESS Integrated Networks, Inc.
BellSouth Standard Interconnection Agreement

Attachment Name	Section No.	Version Date	Planned Activities
	2		
	3		
	4		
	5		
	6		
	7		
	8		
	9		
	10		
	11		
	12		
	13		
	Exhibit A		
	Exhibit B		
	Exhibit C		
	Exhibit D		
	Exhibit E		
	Exhibit F		
	Exhibit G		
	Exhibit H		
2-Network Elements & Other Services	1		
	2		
	3		
	4		
	5		
	6		
	7		
	8		
	9		
	10		

AGREEMENT IMPLEMENTATION TEMPLATE (Business)
for
ACCESS Integrated Networks, Inc.
BellSouth Standard Interconnection Agreement

Attachment Name	Section No.	Version Date	Planned Activities
	11		
	12		
	13		
	14		
	15		
	16		
	17		
	Exhibit A		
	Exhibit B		
	Exhibit C		
3-Local Interconnection	1		
	2		
	3		
	4		
	5		
	6		
	7		
	8		
	Exhibit A		
4-Physical Collocation	1		
	2		
	3		
	4		
	5		
	6		
	7		
	8		
	9		
	10		
	11		
	12		

AGREEMENT IMPLEMENTATION TEMPLATE (Business)
for
ACCESS Integrated Networks, Inc.
BellSouth Standard Interconnection Agreement

Attachment Name	Section No.	Version Date	Planned Activities
	13		
	14		
	Exhibit A		
	Exhibit B		
5-Access to Numbers & Number Portability	1		
	2		
	3		
	4		
	5		
	6		
	7		
	8		
	Exhibit A		
6-Ordering/Provisioning	1		
	2		
	3		
7-Billing & Billing Accuracy Certification	1		
	2		
	3		
	4		
	5		
	6		
	7		
	Exhibit A		
8-ROW/Conduits/PoleAtt	1		
9-Perf Measurement	Pre-Ordering		
	Ordering		
	Provisioning		
	Maint/Repair		

AGREEMENT IMPLEMENTATION TEMPLATE (Business)
for
ACCESS Integrated Networks, Inc.
BellSouth Standard Interconnection Agreement

Attachment Name	Section No.	Version Date	Planned Activities
	Billing		
	Opr Svcs/DA		
	E911		
	Trunk Grp Perf		
	Collocation		
	Appendix A		
	Appendix B		
	Appendix C		

Attachment 11

BellSouth Disaster Recovery Plan

2000
BELLSOUTH

DISASTER RECOVERY PLANNING

For

CLECS

CONTENTS

PAGE

1.0 Purpose 4
2.0 Single Point of Contact 4
3.0 Identifying the Problem 4
3.1 Site Control 5
3.2 Environmental Concerns 6
4.0 The Emergency Control Center (ECC) 6
5.0 Recovery Procedures 7
5.1 CLEC Outage 7
5.2 BellSouth Outage 7
5.2.1 Loss of Central Office 8
5.2.2 Loss of a Central Office with Serving Wire Center Functions 8
5.2.3 Loss of a Central Office with Tandem Functions 8
5.2.4 Loss of a Facility Hub 9
5.3 Combined Outage (CLEC and BellSouth Equipment 9
6.0 T1 Identification Procedures 9
7.0 Acronyms 10

1.0 PURPOSE

In the unlikely event of a disaster occurring that affects BellSouth's long-term ability to deliver traffic to a Competitive Local Exchange Carrier (CLEC), general procedures have been developed to hasten the recovery process. Since each location is different and could be affected by an assortment of potential problems, a detailed recovery plan is impractical. However, in the process of reviewing recovery activities for specific locations, some basic procedures emerge that appear to be common in most cases.

These general procedures should apply to any disaster that affects the delivery of traffic for an extended time period. Each CLEC will be given the same consideration during an outage and service will be restored as quickly as possible.

This document will cover the basic recovery procedures that would apply to every CLEC.

2.0 SINGLE POINT OF CONTACT

When a problem is experienced, regardless of the severity, the BellSouth Network Management Center (NMC) will observe traffic anomalies and begin monitoring the situation. Controls will be appropriately applied to insure the sanity of BellSouth's network; and, in the event that a switch or facility node is lost, the NMC will attempt to circumvent the failure using available reroutes.

BellSouth's NMC will remain in control of the restoration efforts until the problem has been identified as being a long-term outage. At that time, the NMC will contact BellSouth's Emergency Control Center (ECC) and relinquish control of the recovery efforts. Even though the ECC may take charge of the situation, the NMC will continue to monitor the circumstances and restore traffic as soon as damaged network elements are revitalized.

The telephone number for the BellSouth Network Management Center in Atlanta, as published in Telcordia's National Network Management Directory, is 404-321-2516.

3.0 IDENTIFYING THE PROBLEM

During the early stages of problem detection, the NMC will be able to tell which CLECs are affected by the catastrophe. Further analysis and/or first hand observation will determine if the disaster has affected CLEC equipment only; BellSouth equipment only or a combination. The initial restoration activity will be largely determined by the equipment that is affected.

Once the nature of the disaster is determined and after verifying the cause of the problem, the NMC will initiate reroutes and/or transfers that are jointly agreed upon by the affected CLECs' Network Management Center and the BellSouth NMC. The type and percentage of controls used will depend upon available network capacity. Controls necessary to stabilize the situation will be invoked and the NMC will attempt to re-establish as much traffic as possible.

For long term outages, recovery efforts will be coordinated by the Emergency Control Center (ECC). Traffic controls will continue to be applied by the NMC until facilities are re-established. As equipment is made available for service, the ECC will instruct the NMC to begin removing the controls and allow traffic to resume.

3.1 SITE CONTROL

In the total loss of building use scenario, what likely exists will be a smoking pile of rubble. This rubble will contain many components that could be dangerous. It could also contain any personnel on the premises at the time of the disaster. For these reasons, the local fire marshal with the assistance of the police will control the site until the building is no longer a threat to surrounding properties and the companies have secured the site from the general public.

During this time, the majority owner of the building should be arranging for a demolition contractor to mobilize to the site with the primary objective of reaching the cable entrance facility for a damage assessment. The results of this assessment would then dictate immediate plans for restoration, both short term and permanent.

In a less catastrophic event, i.e., the building is still standing and the cable entrance facility is usable, the situation is more complex. The site will initially be controlled by local authorities until the threat to adjacent property has diminished. Once the site is returned to the control of the companies, the following events should occur.

An initial assessment of the main building infrastructure systems (mechanical, electrical, fire & life safety, elevators, and others) will establish building needs. Once these needs are determined, the majority owner should lead the building restoration efforts. There may be situations where the site will not be totally restored within the confines of the building. The companies must individually determine their needs and jointly assess the cost of permanent restoration to determine the overall plan of action.

Multiple restoration trailers from each company will result in the need for designated space and installation order. This layout and control is required to maximize the amount of restoration equipment that can be placed at the site, and the priority of placements.

Care must be taken in this planning to insure other restoration efforts have logistical access to the building. Major components of telephone and building equipment will need to be removed and replaced. A priority for this equipment must also be jointly established to facilitate overall site restoration. (Example: If the AC switchgear has sustained damage, this would be of the highest priority in order to regain power, lighting, and HVAC throughout the building.)

If the site will not accommodate the required restoration equipment, the companies would then need to quickly arrange with local authorities for street closures, rights of way or other possible options available.

3.2 ENVIRONMENTAL CONCERNS

In the worse case scenario, many environmental concerns must be addressed. Along with the police and fire marshal, the state environmental protection department will be on site to monitor the situation.

Items to be concerned with in a large central office building could include:

1. Emergency engine fuel supply. Damage to the standby equipment and the fuel handling equipment could have created "spill" conditions that have to be handled within state and federal regulations.

2. Asbestos containing materials that may be spread throughout the wreckage. Asbestos could be in many components of building, electrical, mechanical, outside plant distribution, and telephone systems.

3. Lead and acid. These materials could be present in potentially large quantities depending upon the extent of damage to the power room.

4. Mercury and other regulated compounds resident in telephone equipment.

5. Other compounds produced by the fire or heat.

Once a total loss event occurs at a large site, local authorities will control immediate clean up (water placed on the wreckage by the fire department) and site access.

At some point, the companies will become involved with local authorities in the overall planning associated with site clean up and restoration. Depending on the clean up approach taken, delays in the restoration of several hours to several days may occur.

In a less severe disaster, items listed above are more defined and can be addressed individually depending on the damage.

In each case, the majority owner should coordinate building and environmental restoration as well as maintain proper planning and site control.

4.0 THE EMERGENCY CONTROL CENTER (ECC)

The ECC is located in the Colonnade Building in Birmingham, Alabama. During an emergency, the ECC staff will convene a group of pre-selected experts to inventory the damage and initiate corrective actions. These experts have regional access to BellSouth's personnel and equipment and will assume control of the restoration activity anywhere in the nine-state area.

In the past, the ECC has been involve with restoration activities resulting from hurricanes, ice storms and floods. They have demonstrated their capabilities during these calamities as well as

during outages caused by human error or equipment failures. This group has an excellent record of restoring service as quickly as possible.

During a major disaster, the ECC may move emergency equipment to the affected location, direct recovery efforts of local personnel and coordinate service restoration activities with the CLECs. The ECC will attempt to restore service as quickly as possible using whatever means is available; leaving permanent solutions, such as the replacement of damaged buildings or equipment, for local personnel to administer.

Part of the ECC's responsibility, after temporary equipment is in place, is to support the NMC efforts to return service to the CLECs. Once service has been restored, the ECC will return control of the network to normal operational organizations. Any long-term changes required after service is restored will be made in an orderly fashion and will be conducted as normal activity.

5.0 RECOVERY PROCEDURES

The nature and severity of any disaster will influence the recovery procedures. One crucial factor in determining how BellSouth will proceed with restoration is whether or not BellSouth's equipment is incapacitated. Regardless of who's equipment is out of service, BellSouth will move as quickly as possible to aid with service recovery; however, the approach that will be taken may differ depending upon the location of the problem.

5.1 CLEC OUTAGE

For a problem limited to one CLEC (or a building with multiple CLECs), BellSouth has several options available for restoring service quickly. For those CLECs that have agreements with other CLECs, BellSouth can immediately start directing traffic to a provisional CLEC for completion. This alternative is dependent upon BellSouth having concurrence from the affected CLECs.

Whether or not the affected CLECs have requested a traffic transfer to another CLEC will not impact BellSouth's resolve to re-establish traffic to the original destination as quickly as possible.

5.2 BELLSOUTH OUTAGE

Because BellSouth's equipment has varying degrees of impact on the service provided to the CLECs, restoring service from damaged BellSouth equipment is different. The outage will probably impact a number of Carriers simultaneously. However, the ECC will be able to initiate immediate actions to correct the problem.

A disaster involving any of BellSouth's equipment locations could impact the CLECs, some more than others. A disaster at a Central Office (CO) would only impact the delivery of traffic to and from that one location, but the incident could affect many Carriers. If the Central Office is a Serving Wire Center (SWC), then traffic from the entire area to those Carriers served from that switch would also be impacted. If the switch functions as an Access Tandem, or there is a tandem in the building, traffic from every CO to every CLEC could be interrupted. A disaster that destroys a facility hub could disrupt various traffic flows, even though the switching equipment may be unaffected.

The NMC would be the first group to observe a problem involving BellSouth's equipment. Shortly after a disaster, the NMC will begin applying controls and finding re-routes for the

completion of as much traffic as possible. These reroutes may involve delivering traffic to alternate Carriers upon receiving approval from the CLECs involved. In some cases, changes in translations will be required. If the outage is caused by the destruction of equipment, then the ECC will assume control of the restoration.

5.2.1 Loss of a Central Office

When BellSouth loses a Central Office, the ECC will

a) Place specialists and emergency equipment on notice;

b) Inventory the damage to determine what equipment and/or functions are lost;

c) Move containerized emergency equipment and facility equipment to the stricken area, if necessary;

d) Begin reconnecting service for Hospitals, Police and other emergency agencies; and

e) Begin restoring service to CLECs and other customers.

5.2.2 Loss of a Central Office with Serving Wire Center Functions

The loss of a Central Office that also serves as a Serving Wire Center (SWC) will be restored as described in section 5.2.1.

5.2.3 Loss of a Central Office with Tandem Functions

When BellSouth loses a Central Office building that serves as an Access Tandem and as a SWC, the ECC will

a) Place specialists and emergency equipment on notice;

b) Inventory the damage to determine what equipment and/or functions are lost;

c) Move containerized emergency equipment and facility equipment to the stricken area, if necessary;

d) Begin reconnecting service for Hospitals, Police and other emergency agencies;

e) Re-direct as much traffic as possible to the alternate access tandem (if available) for delivery to those CLECs utilizing a different location as a SWC;

f) Begin aggregating traffic to a location near the damaged building. From this location, begin re-establishing trunk groups to the CLECs for the delivery of traffic normally found on the direct trunk groups. (This aggregation point may be the alternate access tandem location or another CO on a primary facility route.)

g) Begin restoring service to CLECs and other customers.

5.2.4 Loss of a Facility Hub

In the event that BellSouth loses a facility hub, the recovery process is much the same as above. Once the NMC has observed the problem and administered the appropriate controls, the ECC will assume authority for the repairs. The recovery effort will include

a) Placing specialists and emergency equipment on notice;

b) Inventorying the damage to determine what equipment and/or functions are lost;

c) Moving containerized emergency equipment to the stricken area, if necessary;

d) Reconnecting service for Hospitals, Police and other emergency agencies; and

e) Restoring service to CLECs and other customers. If necessary, BellSouth will aggregate the traffic at another location and build temporary facilities. This alternative would be viable for a location that is destroyed and building repairs are required.

5.3 COMBINED OUTAGE (CLEC AND BELLSOUTH EQUIPMENT)

In some instances, a disaster may impact BellSouth's equipment as well as the CLECs'. This situation will be handled in much the same way as described in section 5.2.3. Since BellSouth and the CLECs will be utilizing temporary equipment, close coordination will be required.

6.0 T1 IDENTIFICATION PROCEDURES

During the restoration of service after a disaster, BellSouth may be forced to aggregate traffic for delivery to a CLEC. During this process, T1 traffic may be consolidated onto DS3s and may become unidentifiable to the Carrier. Because resources will be limited, BellSouth may be forced to "package" this traffic entirely differently then normally received by the CLECs. Therefore, a method for identifying the T1 traffic on the DS3s and providing the information to the Carriers is required.

7.0 ACRONYMS

CO - Central Office (BellSouth)

DS3 - Facility that carries 28 T1s (672 circuits)

ECC - Emergency Control Center (BellSouth)

CLEC - Competitive Local Exchange Carrier

NMC - Network Management Center

SWC - Serving Wire Center (BellSouth switch)

T1 - Facility that carries 24 circuits

Hurricane Information

During a hurricane, BellSouth will make every effort to keep CLECs updated on the status of our network. Information centers will be set up throughout BellSouth Telecommunications. These centers are not intended to be used for escalations, but rather to keep the CLEC informed of network related issues, area damages and dispatch conditions, etc.

Hurricane-related information can also be found on line at http://www.interconnection.bellsouth.com/network/disaster/dis_resp.htm. Information concerning Mechanized Disaster Reports can also be found at this website by clicking on CURRENT MDR REPORTS or by going directly to http://www.interconnection.bellsouth.com/network/disaster/mdrs.htm.

BST Disaster Management Plan

BellSouth maintenance centers have geographical and redundant communication capabilities. In the event of a disaster removing any maintenance center from service another geographical center would assume maintenance responsibilities. The contact numbers will not change and the transfer will be transparent to the CLEC.

AMENDMENT TO
INTERCONNECTION AGREEMENT BETWEEN
BELLSOUTH TELECOMMUNICATIONS, INC.
AND ACCESS INTEGRATED NETWORKS, INC.
DATED FEBRUARY 17, 2000

Pursuant to this Agreement (the "Amendment"), BellSouth Telecommunications, Inc. ("BellSouth") and ACCESS Integrated Networks, Inc. ("ACCESS Integrated") hereinafter referred to collectively as the "Parties", hereby agree to amend that certain Interconnection Agreement between the Parties dated February 17, 2000 ("Interconnection Agreement").

NOW THEREFORE, in consideration of the mutual provisions contained herein and other good and valuable consideration, the receipt and sufficiency of which are hereby acknowledged, BellSouth and ACCESS Integrated hereby covenant and agree as follows:

1. Attachment 2 of the Interconnection Agreement is hereby amended to add a new section 2.10 and all its subsections for the state of Tennessee as follows:

2.10 Preordering Loop Makeup (LMU)

2.10.1 Description of Service

2.10.1.1 BellSouth shall make available to ACCESS Integrated loop makeup (LMU) data for BellSouth's network facilities. This section addresses LMU as a *preordering* transaction, distinct from ACCESS Integrated ordering any other service(s). Loop Makeup *Service Inquiries (LMUSI) for preordering loop makeup* are likewise unique from other preordering functions with associated service inquiries (SI) as described in this Agreement.

2.10.1.2 BellSouth will provide ACCESS Integrated with loop makeup information consisting of the composition of the loop material (copper/fiber); the existence, location and type of equipment on the loop, including but not limited to digital loop carrier or other remote concentration devises, feeder/distribution interfaces, bridge taps, load coils, pair-gain devices; the loop length; and the wire gauge. The LMUSI may be utilized by ACCESS Integrated for the purpose of determining whether the loop requested is capable of supporting DSL service or other advanced data services. The determination shall be made solely by ACCESS Integrated and BellSouth shall not be liable in any way for the performance of the advanced data services provisioned over said loop.

2.10.1.3 BellSouth's LMU information is provided to ACCESS Integrated as it exists either in BellSouth's databases or in its hard copy facility records. BellSouth does not guarantee accuracy or reliability of the LMU information provided.

2.10.1.4 BellSouth offers LMU information for the sole purpose of allowing ACCESS Integrated to determine whether, in ACCESS Integrated's

judgment, BellSouth's loops will support the specific services that ACCESS Integrated wishes to provide over those loops. ACCESS Integrated may choose to use equipment that it deems will enable it to provide a certain type and level of service over a particular BellSouth loop; however, such configurations may not match BellSouth's or the industry's standards and specifications for the intended type and level of service. Accordingly, ACCESS Integrated shall be responsible for insuring that the specific loop type (ADSL, HDSL, or otherwise) ordered on the LSR matches the LMU of the facility requested. ACCESS Integrated bears full responsibility for being knowledgeable of BellSouth's technical standards and the specifications of BellSouth's loops. ACCESS Integrated bears full responsibility for making the appropriate ordering decisions of matching BellSouth loops with ACCESS Integrated's equipment for accomplishing ACCESS Integrated's end goal for the intended service it wishes to provide its end-user(s). ACCESS Integrated is fully responsible for any of its service configurations that may differ from BellSouth's technical standard for the loop type ordered.

2.10.2 Submitting Loop Makeup Service Inquiries

2.10.2.1 ACCESS Integrated will be able to obtain LMU information by submitting a LMUSI mechanically or manually. **Mechanized** LMUSIs should be submitted through BellSouth's Operational Support Systems interfaces. After obtaining the resulting loop data from the mechanized LMUSI process, if ACCESS Integrated determines that it needs further loop data information in order to make a determination of loop service capability, ACCESS Integrated may initiate a separate manual SI for a separate nonrecurring charge as set forth in Section 2.10.2.3 Mechanized LMU has been made available for limited deployment to those CLECs that have effective X-Digital Subscriber Line (xDSL) Beta Test Agreements in place with BellSouth. CLECs will be notified once a successful Beta Test has been completed, and mechanized LMU shall then be available to ACCESS Integrated.

2.10.2.2 **Manual** LMUSIs shall be submitted on the preordering manual LMUSI form by means of fax or electronic-mail to BellSouth's Complex Resale Support Group (CRSG)/Account Team utilizing the Preordering Loop Makeup Service Inquiry form. The standard service interval for the return of a Loop Makeup Manual Service Inquiry is seven business days. This service interval is distinct from the interval applied to the subsequent service order. Manual LMUSIs are not subject to expedite requests.

2.10.2.3 LMUSI Types and Associated Charges

2.10.2.3.1 ACCESS Integrated may request LMU information by submitting LMUSIs in accordance with the rate elements in Exhibit 1-TN.

2.10.2.3.2 ACCESS Integrated will be assessed a nonrecurring charge for each facility queried as specified in Exhibit 1-TN. Rates for Tennessee are interim and subject to true-up pending approval of final rates by the

respective State Commission. True-ups will be retroactive to the effective date of this Agreement.

2.10.2.3.3 ACCESS Integrated may reserve facilities for up to four (4) days in connection with a LMUSI. Reserved facilities for which ACCESS Integrated does not plan to place a UNE local service request (LSR) should be cancelled by ACCESS Integrated. Should ACCESS Integrated wish to cancel a reservation on a spare facility, the cancellation will require a facility reservation number (RESID/FRN).

2.10.2.3.4 The reservation holding timeframe is a maximum of four days from the time that BellSouth's LMU data is returned to ACCESS Integrated for the facility queried. During this holding time and prior to ACCESS Integrated's placing an LSR, the reserved facilities are rendered unavailable to other customers, whether for CLEC(s) or for BellSouth. Notwithstanding the foregoing, BellSouth does not guarantee that a reservation will assure ACCESS Integrated's ability to order the exact facility reserved.

2.10.2.3.5 If ACCESS Integrated does not submit an LSR for a UNE service on a reserved facility within the four-day reservation timeframe, the reservation of that spare facility will become invalid and the facility will be released.

2.10.2.3.6 Charges for preordering LMUSI are separate from any charges associated with ordering other services from BellSouth.

2.10.2.4 Ordering of Other UNE Services

2.10.2.4.1 Whenever ACCESS Integrated has reserved a facility through BellSouth's preordering LMU service, should ACCESS Integrated seek to place a subsequent UNE LSR on a reserved facility, ACCESS Integrated shall provide BellSouth the RESID/FRN of the single spare facility on the appropriate UNE LSR., ACCESS Integrated will be billed the appropriate rate element for the specific type UNE loop ordered by ACCESS Integrated as set forth in this Attachment. ACCESS Integrated will not be billed any additional Loop Makeup charges for the loop so ordered. Should ACCESS Integrated choose to place a UNE LSR having previously submitted a request for *preordering LMU without a reservation*, ACCESS Integrated will be billed the appropriate rate element for the specific UNE loop ordered as well as additional Loop Makeup charges as set forth in this Attachment. Rates are provided in Exhibit 1-TN in this Attachment.

2.10.2.4.2 Where ACCESS Integrated submits an LSR to order facilities reserved during the LMUSI process, BellSouth will use its best efforts to assign to ACCESS Integrated the facility reserved as indicated on the return of the LMU. Multi-facility reservations per single RESID/FRN as provided with the mechanized LMUSI process are less likely to result in the specific assignment requested by ACCESS Integrated. For those occasions when BellSouth cannot assign the specific facility reserved by ACCESS Integrated during the LMU pre-ordering transaction, due to incomplete or incorrect information provided by ACCESS Integrated during the ordering

process, BellSouth will assign to ACCESS Integrated, subject to availability, a facility that meets the BellSouth technical standards of the BellSouth type loop as ordered by ACCESS Integrated. If the ordered loop type is not available, ACCESS Integrated may utilize the Unbundled Loop Modification process or the Special Construction process, as applicable, to obtain the loop type ordered.

2. Attachment 2 of the Interconnection Agreement is hereby amended to add a new section 14.0 and all its subsections for the state of Tennessee as follows:

14.0 **High Frequency Spectrum Network Element**

14.1 General

14.1.1 BellSouth shall provide ACCESS Integrated access to the high frequency portion of the local loop as an unbundled network element only where BellSouth is the voice service provider to the end user ("High Frequency Spectrum") at the rates set forth in Exhibit 1-TN. BellSouth shall provide ACCESS Integrated with the High Frequency Spectrum irrespective of whether BellSouth chooses to offer xDSL services on the loop.

14.1.2 The High Frequency Spectrum is defined as the frequency range above the voiceband on a copper loop facility carrying analog circuit-switched voiceband transmissions. Access to the High Frequency Spectrum is intended to allow ACCESS Integrated the ability to provide Digital Subscriber Line ("xDSL") data services to the end user for which BellSouth provides voice services. The High Frequency Spectrum shall be available for any version of xDSL presumed acceptable for deployment pursuant to 47 CFR Section 51.230, including, but not limited to, ADSL, HDSL, and any other xDSL technology that is presumed to be acceptable for deployment pursuant to FCC rules. BellSouth will continue to have access to the low frequency portion of the loop spectrum (from 300 Hertz to at least 3000 Hertz, and potentially up to 3400 Hertz, depending on equipment and facilities) for the purposes of providing voice service. ACCESS Integrated shall only use xDSL technology that is within the PSD mask parameters set forth in T1.413 or other applicable industry standards. ACCESS Integrated shall provision xDSL service on the High Frequency Spectrum in accordance with the applicable Technical Specifications and Standards.

14.1.3 The following loop requirements are necessary for ACCESS Integrated to be able to access the High Frequency Spectrum: an unconditioned, 2-wire copper loop. An unconditioned loop is a copper loop with no load coils, low-pass filters, range extenders, DAMLs, or similar devices and minimal bridged taps consistent with ANSI T1.413 and T1.601. BellSouth will provide ACCESS Integrated access to the Unbundled Loop Modification (Line Conditioning), in accordance with Section 2.2 of Attachment 2 of the Interconnection Agreement. BellSouth is not required to condition a loop for access to the high frequency spectrum if conditioning of that loop significantly degrades BellSouth's voice service. If ACCESS Integrated requests that BellSouth condition a loop longer than 18,000 ft. and such

conditioning significantly degrades the voice services on the loop, ACCESS Integrated shall pay for the loop to be restored to its original state.

14.1.4 ACCESS Integrated's termination point is the point of termination for ACCESS Integrated on the toll main distributing frame in the central office ("Termination Point"). BellSouth will use jumpers to connect ACCESS Integrated's connecting block to the splitter. The splitter will route the High Frequency Spectrum on the circuit to ACCESS Integrated's xDSL equipment in ACCESS Integrated's collocation space.

14.1.5 ACCESS Integrated shall have access to the splitter for test purposes, irrespective of where the splitter is placed in the BellSouth premises.

14.2.0 **Provisioning of High Frequency Spectrum and Splitter Space**

14.2.1 BellSouth will provide ACCESS Integrated with access to the High Frequency Spectrum as follows:

14.2.1.1 BellSouth will install splitters within forty-two (42) calendar days of ACCESS Integrated's submission of such order to the BellSouth Complex Resale Support Group; provided, however, that in the event BellSouth did not have reasonable notice that a particular central office was to have a splitter installed therein, the forty-two (42) day interval shall not apply. Collocation itself or an application for collocation will serve as reasonable notice.

14.2.1.2 Once a splitter is installed on behalf of ACCESS Integrated in a central office, ACCESS Integrated shall be entitled to order the High Frequency Spectrum on lines served out of that central office.

14.2.1.2.1 BellSouth will bill and ACCESS Integrated shall pay the SOMAN and SOMEC charges as described in this Agreement when ACCESS Integrated orders High Frequency Spectrum for end-user service.

14.2.1.3 BellSouth will select, purchase, install, and maintain a central office POTS splitter and provide ACCESS Integrated access to data ports on the splitter. At least 30 days before making a change in splitter suppliers, BellSouth will provide ACCESS Integrated with a carrier notification letter, informing ACCESS Integrated of change. ACCESS Integrated shall purchase ports on the splitter as set forth more fully below.

14.2.1.4 BellSouth will install the splitter in (i) a common area close to the ACCESS Integrated collocation area, if possible; or (ii) in a BellSouth relay rack as close to the ACCESS Integrated DS0 termination point as possible. For purposes of this section, a common area is defined as an area in the central office in which both Parties have access to a common test access point. BellSouth will cross-connect the splitter data ports to a specified ACCESS Integrated DS0 at such time that a ACCESS Integrated end user's service is established.

14.2.1.5 The High Frequency Spectrum shall only be available on loops on which BellSouth is also providing, and continues to provide, analog voice service directly to the end user. In the event the end-user terminates its BellSouth provided voice service for any reason, and ACCESS Integrated desires to continue providing xDSL service on such loop, ACCESS Integrated shall be required to purchase a full stand-alone loop unbundled network element. In the event BellSouth disconnects the end-user's voice service pursuant to its tariffs or applicable law, and ACCESS Integrated desires to continue providing xDSL service on such loop, ACCESS Integrated shall be permitted to continue using the line by purchasing the full stand-alone loop unbundled network element. To the extent commercially practicable, BellSouth shall give ACCESS Integrated notice in a reasonable time prior to disconnect, which notice shall give ACCESS Integrated an adequate opportunity to notify BellSouth of its intent to purchase such loop. In those cases in which BellSouth no longer provides voice service to the end user and ACCESS Integrated purchases the full stand-alone loop, ACCESS Integrated may elect the type of loop it will purchase. ACCESS Integrated will pay the appropriate recurring and non-recurring rates for such loop as set forth in Exhibit 1-TN to this Attachment. In the event ACCESS Integrated purchases a voice grade loop, ACCESS Integrated acknowledges that such loop may not remain xDSL compatible.

14.2.1.6 Only one competitive local exchange carrier shall be permitted access to the High Frequency Spectrum of any particular loop.

14.2.2 Ordering

14.2.2.1 To order High Frequency Spectrum on a particular loop, ACCESS Integrated must have a DSLAM collocated in the central office that serves the end-user of such loop. ACCESS Integrated may order splitters in a central office once it has installed its Digital Subscriber Line Access Multiplexer ("DSLAM") in that central office. BellSouth will install these splitters within the interval provided in paragraph 14.2.1.1.

14.2.2.2 BellSouth will devise a splitter order form that allows ACCESS Integrated to order splitter ports in increments of 24 ports.

14.2.2.2.1 BellSouth will provide ACCESS Integrated the Local Service Request ("LSR") format to be used when ordering the High Frequency Spectrum.

14.2.2.3 BellSouth will provide access to the High Frequency Spectrum within the following target intervals: BellSouth will return a manual Firm Order Confirmation ("FOC") in no more than two (2) business days after receipt of a valid, error free manual LSR. When ACCESS Integrated submits an electronic LSR for High Frequency Spectrum, BellSouth will return a FOC in four (4) hours ninety-five percent (95%) of the time, or, for orders that do not flow-through, in two (2) business days. BellSouth will provide ACCESS Integrated with access to the High Frequency Spectrum at the following target intervals:

14.2.2.3.1 For 1-5 lines at the same address within three (3) business days from BellSouth's issuance of a FOC; 6-10 lines at same address within 5 business days from BellSouth's issuance of a FOC; and more than 10 lines at the same address is to be negotiated.

14.2.2.4 BellSouth will provide to ACCESS Integrated BellSouth's Loop Qualification System that BellSouth uses to qualify loops for its own ADSL offering as described below.

14.2.2.5 BellSouth will provide ACCESS Integrated access to the Preordering Loop Makeup (LMU), in accordance with Section 2.10 of this Agreement. BellSouth shall bill and ACCESS Integrated shall pay the rates for such services, as described in Exhibit 1-TN.

14.3.0 **Maintenance and Repair**

14.3.1 ACCESS Integrated shall have access, for test, repair, and maintenance purposes, to any loop as to which it has access to the High Frequency Spectrum. ACCESS Integrated may access the loop at the point where the combined voice and data signal exits the central office splitter.

14.3.1.1 BellSouth will be responsible for repairing voice services and the physical line between the network interface device at the customer's premises and the Termination Point of demarcation in the central office. ACCESS Integrated will be responsible for repairing data services. Each Party will be responsible for maintaining its own equipment.

14.3.1.2 ACCESS Integrated shall inform its end users to direct data problems to ACCESS Integrated, unless both voice and data services are impaired, in which event the end users should call BellSouth.

14.3.1.3 Once a Party has isolated a trouble to the other Party's portion of the loop, the Party isolating the trouble shall notify the end user that the trouble is on the other Party's portion of the loop.

14.3.1.4 In the event ACCESS Integrated's deployment of xDSL on the High Frequency Spectrum significantly degrades the performance of other advanced services or of BellSouth's voice service on the same loop, BellSouth shall notify ACCESS Integrated and allow twenty-four (24) hours to cure the trouble. If ACCESS Integrated fails to resolve the trouble, BellSouth may discontinue ACCESS Integrated's access to the High Frequency Spectrum on such loop.

3. Pursuant to Exhibit C in Attachment 2 of the Interconnection Agreement, the Parties hereby agree to add the rates for Unbundled Network Element Line Sharing and Unbundled Loop Modification/Conditioning and amend the rates for Loop Make-Up for the state of Tennessee as set forth in Exhibit 1-TN. Based on the results of the Tennessee Regulatory Authority (TRA) hearing on September 26, 2000 in Docket No. 00-00544 the interim rates for Line Sharing and Other Services in Tennessee shall be as set forth in Exhibit 1-TN. These rates shall be subject to retroactive true-up once permanent rates for Unbundled Network Elements Line Sharing,

Unbundled Loop Modification/Conditioning and Loop Make-Up have been established by the Authority.

4. The Parties agree that the rates for Tennessee in Exhibit C of Attachment 2 of the Interconnection Agreement that are associated with the Loop Make-Up elements are hereby deleted and replaced with new rates for like elements hereto attached as Exhibit 1-TN.

5. The Parties agree that the rates for Tennessee in Exhibit C of Attachment 2 of the Interconnection Agreement are hereby amended to include the new rate elements for Loop Make-Up found in Exhibit 1-TN hereto attached.

6. The Parties agree that all of the other provisions of the Interconnection Agreement, dated February 17, 2000, shall remain in full force and effect.

7. The Parties further agree that either or both of the Parties is authorized to submit this Amendment to the Tennessee Regulatory Authority or other regulatory body having jurisdiction over the subject matter of this Amendment, for approval subject to Section 252(e) of the federal Telecommunications Act of 1996.

IN WITNESS WHEREOF, the Parties hereto have caused this Amendment to be executed by their respective duly authorized representatives on the date indicated below.

BellSouth Telecommunications, Inc.	**ACCESS Integrated Networks, Inc.**
Signature on File	Signature on File
By: _____	By: _____
Jerry Hendrix – Executive Director	William T. Wright
Date: 12/8/00	Date: 11/17/00

BELLSOUTH/ACCCESS INTEGRATED
NETWORK ELEMENTS
AND OTHER SERVICES

Attachment 2
Exhibit C
TN Rates

DESCRIPTION		USOC	TN
Unbundled Loop Modification/Conditioning			
	NRC - Load Coil/Equipment Removal per 2 Wire pair - Loops less than or equal to 18kft **	ULM2L	$65.40
	NRC - Load Coil/Equipment Removal per 2 Wire pair - Loops greater than 18kft - 1st **	ULM2G	$710.71
	NRC - Load Coil/Equipment Removal per 2 Wire pair - Loops greater than 18kft - Add'l **	ULM2G	$23.77
	NRC - Load Coil/Equipment Removal per 4 Wire pair - Loops less than or equal to 18kft **	ULM4L	$65.40
	NRC - Load Coil/Equipment Removal per 4 Wire pair - Loops greater than 18kft - 1st **	ULM4G	$710.71
	NRC - Load Coil/Equipment Removal per 4 Wire pair - Loops greater than 18kft - Add'l **	ULM4G	$23.77
	NRC - Bridge Tap Removal per pair unloaded **	ULMBT	$65.44
Loop Make Up			
	NRC - Loop Makeup - Preordering Without Reservation, per working facility queried (Manual) **	UMKLW	$100.00
	Loop Makeup - Preordering Without Reservation, per spare facility queried (Manual) Maximum number of spare facilities per manual LMUSI is 3. **	UMKLW	$100.00
	NRC-Loop Makeup - Preordering With Reservation, per spare facility queried (Manual) Max number of spare facilities per manual LMUSI is 3. **	UMKLP	$100.00
	NRC - Loop Makeup - Preordering Without Reservation, per working facility queried (Mechanized) **		$0.6888
	Loop Makeup - Preordering Without Reservation, per spare facility queried (Mechanized) Max number of spare facilities per mechanized LMUSI is 10. **		$0.6888
	Loop Makeup - Preordering With Reservation, per spare facility queried (Mechanized) Max number of spare facilities per mechanized LMUSI is 10. **		$0.6888
LINE SHARING			
	2-Wire analog VG (SL1) for Line Sharing		
	RC - per month (See Note) **		$12.16
	NRC - 1st (See Note) **		$31.99
	NRC - Add'l (See Note) **		$20.02
	RC - Per month **	ULSDA	$100.00
	NRC - 1st **	ULSDA	$150.00
	NRC - Addl **	ULSDA	$0.00
	NRC - Disconnect 1st **	ULSDA	$150.00
	NRC - Disconnect Add'l **	ULSDA	$0.00

Attachment 2
Exhibit C
TN Rates

	System Splitter - 24 Line Capacity		
	RC - Per month **	ULSDB	$25.00
	NRC - 1st **	ULSDB	$150.00
	NRC - Addl **	ULSDB	$0.00
	NRC - Disconnect 1st **	ULSDB	$150.00
	NRC - Disconnect Add'l **	ULSDB	$0.00
	Loop Capacity, Line Activation Per Occurrence		
	RC - Per Month **	ULSDC	$3.48
	NRC - 1st **	ULSDC	$40.00
	NRC - Addl **	ULSDC	$21.39
	Subsequent Activity - Per Occurrence		
	NRC - 1st **	ULSDS	$30.00
	NRC - Addl **	ULSDS	$15.00
	** Interim Rates subject to true-up		
Note:			
	The recurring interim and nonrecurring interim rates in TN for 2-Wire analog VG (SL1) for Line Sharing is for a stand-alone loop purchased by ACCESS Integrated to provide both analog voice service and xDSL services or in the event ACCESS Integrated wishes to continue providing xDSL services to an end-user who terminates its BellSouth-provided voice service. These rates apply when ACCESS Integrated purchases the splitter from BellSouth.		

FIRST AMENDMENT
TO THE
AGREEMENT BETWEEN
ACCESS INTEGRATED NETWORKS, INC.
BELLSOUTH TELECOMMUNICATIONS, INC.
DATED MAY 4, 2000

Pursuant to this Agreement, (the "Amendment"), Access Integrated Networks, Inc. ("Access Integrated"), and BellSouth Telecommunications, Inc. ("BellSouth"), hereinafter referred to collectively as the "Parties," hereby agree to amend that certain Interconnection Agreement between the Parties dated May 4, 2000 ("Agreement").

WHEREAS, BellSouth and Access Integrated entered into the Agreement on May 4, 2000, and;

NOW THEREFORE, in consideration of the mutual provisions contained herein and other good and valuable consideration, the receipt and sufficiency of which are hereby acknowledged, the Parties hereby covenant and agree as follows:

1. Enhanced Extended Link and Loop /Port Combinations rates in Exhibit C of Attachment 2 are hereby deleted in its entirety and replace with new Enhanced Extended Link and Loop/Port Combination rates attached hereto as Exhibit 1 and incorporated herein by this reference.

2. All of the other provisions of the Agreement, dated May 4, 2000, shall remain in full force and effect.

3. Either or both of the Parties is authorized to submit this Amendment to the respective state regulatory authorities for approval subject to Section 252(e) of the Federal Telecommunications Act of 1996.

IN WITNESS WHEREOF, the Parties hereto have caused this Amendment to be executed by their respective duly authorized representatives on the date indicated below.

Access Integrated Networks, Inc.	**BellSouth Telecommunications, Inc.**
Signature on file	**Signature on file**
By:_____	By: _____
Name: William T. Wright	Name: Jerry Hendrix
Title: President	Title: Senior Director
Date: April 7, 2001	Date: April 9, 2001

DESCRIPTION	USOC	AL	FL	GA	KY	LA	MS	NC	SC	TN
UNBUNDLED LOOP COMBINATIONS										
Unbundled Loop/Port Combinations (Note 4)										
MARKET RATES (INCLUDING ALL VERTICAL FEATURES) (Note 1)										
Density Zone 1 / Top 8 MSAs in BellSouth Region			**Orlando, Ft. Lauderdale, Miami**	**Atlanta**		**New Orleans**		**Greensboro-Winston Salem-Highpoint/ Charlotte-Gastonia-Rock Hill**		**Nashville**
Customers with 4 or more DS0 Equivalent										
Currently Combined (Note2)										
2-Wire Voice Grade Loop with 2-Wire Line Port (Res. and Bus.)										
2-Wire Voice Grade Line Port (Res.), per month										
2- wire voice unbundled port - residence	UEPRL	NA	$14.00	$14.00	NA	$14.00	NA	$14.00	NA	$14.00
2-wire voice unbundled port with caller ID - residence	UEPRC	NA	$14.00	$14.00	NA	$14.00	NA	$14.00	NA	$14.00
2-wire voice unbundled port outgoing only - residence	UEPRO	NA	$14.00	$14.00	NA	$14.00	NA	$14.00	NA	$14.00
2-wire voice grade unbundled Alabama extended local dialing parity port with caller ID	UEPAR	NA	NA	NA	NA	NA	NA	NA	NA	NA
2-wire voice grade unbundled Kentucky extended local dialing parity port with caller ID	UEPRM	NA	NA	NA	NA	NA	NA	NA	NA	NA
2-wire voice grade unbundled Louisiana extended local dialing parity port with caller ID	UEPAS	NA	NA	NA	NA	$14.00	NA	NA	NA	NA
2-wire voice grade unbundled Mississippi extended local dialing parity port with caller ID	UEPAT	NA	NA	NA	NA	NA	NA	NA	NA	NA
2-wire voice grade unbundled South Carolina extended local dialing parity port with caller ID	UEPAU	NA	NA	NA	NA	NA	NA	NA	NA	NA
2-wire voice grade unbundled Tennessee extended local dialing parity port with caller ID	UEPAQ	NA	NA	NA	NA	NA	NA	NA	NA	$14.00
2-wire voice unbundled Florida area calling with caller ID - residence	UEPAF	NA	$14.00	NA	NA	NA	NA	NA	NA	NA
2-wire voice unbundled Louisiana Area Plus with caller ID - residence (RUL)	UEPAG	NA	NA	NA	NA	$14.00	NA	NA	NA	NA
2-wire voice unbundled Louisiana Area Plus with caller ID - residence (AC7)	UEPAH	NA	NA	NA	NA	$14.00	NA	NA	NA	NA
2-wire voice unbundled South Carolina Area Calling port with Caller ID - residence (LW8)	UEPAJ	NA	NA	NA	NA	NA	NA	NA	NA	NA
2-wire voice unbundled Tennessee Area Calling port with Caller ID - residence (F2R)	UEPAK	NA	NA	NA	NA	NA	NA	NA	NA	$14.00
2-wire voice unbundled Tennessee Area Calling port with Caller ID - residence (TACER)	UEPAL	NA	NA	NA	NA	NA	NA	NA	NA	$14.00
2-wire voice unbundled Tennessee Area Calling port with Caller ID - residence (TACSR)	UEPAM	NA	NA	NA	NA	NA	NA	NA	NA	$14.00
2-wire voice unbundled Tennessee Area Calling port with Caller ID - residence (1MF2X)	UEPAN	NA	NA	NA	NA	NA	NA	NA	NA	$14.00
2-wire voice unbundled Tennessee Area Calling port with Caller ID - residence (2MR)	UEPAO	NA	NA	NA	NA	NA	NA	NA	NA	$14.00
2-wire voice unbundled res, low usage line port with Caller ID (LUM)	UEPAP	NA	$14.00	$14.00	NA	$14.00	NA	$14.00	NA	$14.00
2-Wire Voice Grade Line Port (Bus.), per month										
2-wire voice unbundled port without Caller ID	UEPBL	NA	$14.00	$14.00	NA	$14.00	NA	$14.00	NA	$14.00
2-wire voice unbundled port with unbundled port with Caller+E484 ID	UEPBC	NA	$14.00	$14.00	NA	$14.00	NA	$14.00	NA	$14.00
2-wire voice unbundled outgoing only port	UEPBO	NA	$14.00	$14.00	NA	$14.00	NA	$14.00	NA	$14.00
2-wire voice grade unbundled Alabama extended local dialing parity port with caller ID	UEPAW	NA	NA	NA	NA	NA	NA	NA	NA	NA
2-wire voice grade unbundled Kentucky extended local dialing parity port with caller ID	UEPBM	NA	NA	NA	NA	NA	NA	NA	NA	NA
2-wire voice grade unbundled Louisiana extended local dialing parity port with caller ID	UEPAX	NA	NA	NA	NA	$14.00	NA	NA	NA	NA
2-wire voice grade unbundled Mississippi extended local dialing parity port with caller ID	UEPAY	NA	NA	NA	NA	NA	NA	NA	NA	NA

DESCRIPTION	USOC	AL	FL	GA	KY	LA	MS	NC	SC	TN
2-wire voice grade unbundled South Carolina extended local dialing parity port with caller ID	UEPAZ	NA	NA	NA	NA	NA	NA	NA	NA	NA
2-wire voice grade unbundled Tennessee extended local dialing parity port with caller ID	UEPAV	NA	NA	NA	NA	NA	NA	NA	NA	$14.00
2-wire voice unbundled incoming only port with Caller ID	UEPB1	NA	$14.00	$14.00	NA	$14.00	NA	$14.00	NA	$14.00
2-wire voice unbundled LA Bus Area Calling Port with Caller ID (BUC)	UEPAA	NA	NA	NA	NA	$14.00	NA	NA	NA	NA
2-wire voice unbundled SC Bus Area Calling Port with Caller ID (LMB)	UEPAB	NA	NA	NA	NA	NA	NA	NA	NA	NA
2-wire voice unbundled TN Bus 2-Way Area Calling Port Economy Option (TACC1)	UEPAC	NA	NA	NA	NA	NA	NA	NA	NA	$14.00
2-wire voice unbundled TN Bus 2-Way Area Calling Port Standard Option (TACC2)	UEPAD	NA	NA	NA	NA	NA	NA	NA	NA	$14.00
2-wire voice unbundled TN Bus 2-WAY Collierville and Memphis Local Calling Port (B2F)	UEPAE	NA	NA	NA	NA	NA	NA	NA	NA	$14.00
2-Wire Voice Grade Loop (SL1) (Res. and Bus.)										
RC - 2-Wire Voice Grade Loop - Statewide	UEPLX	NA	NA	NA	NA	NA	NA	$14.18	NA	NA
RC - 2-Wire Voice Grade Loop Zone 1	UEPLX	NA	$14.90	$10.80	NA	$14.05	NA	NA	NA	$15.92
RC - 2-Wire Voice Grade Loop Zone 2	UEPLX	NA	$18.51	$12.47	NA	$24.14	NA	NA	NA	$20.79
RC - 2-Wire Voice Grade Loop Zone 3	UEPLX	NA	$24.25	$19.83	NA	$49.30	NA	NA	NA	$27.18
Combination Rates										
RC - 2-Wire Voice Grade Loop with 2-Wire Line Port, Statewide	Note 8	NA	NA	NA	NA	NA	NA	$28.18	NA	NA
RC - 2-Wire Voice Grade Loop with 2-Wire Line Port, Zone 1 (Note 6)	Note 8	NA	$28.90	$24.80	NA	$28.05	NA	NA	NA	$29.92
RC - 2-Wire Voice Grade Loop with 2-Wire Line Port, Zone 2 (Note 6)	Note 8	NA	$32.51	$26.47	NA	$38.14	NA	NA	NA	$34.79
RC - 2-Wire Voice Grade Loop with 2-Wire Line Port, Zone 3 (Note 6)	Note 8	NA	$38.25	$33.83	NA	$63.30	NA	NA	NA	$41.18
Nonrecurring Charges										
2-Wire Voice Grade Line Port (Res. And Bus.)										
NRC - 2- wire voice grade unbundled port/loop combination - 1st, with chang		NA	$41.50	$41.50	NA	$41.50	NA	$41.50	NA	$41.50
NRC - 2- wire voice grade unbundled port/loop combination - Add'l, with chang		NA	$41.50	$41.50	NA	$41.50	NA	$41.50	NA	$41.50
NRC - 2- wire voice grade unbundled port/loop combination - 1st, no chang		NA	$41.50	$41.50	NA	$41.50	NA	$41.50	NA	$41.50
NRC - 2- wire voice grade unbundled port/loop combination - Add'l, no chang		NA	$41.50	$41.50	NA	$41.50	NA	$41.50	NA	$41.50
NRC - 2-Wire Voice Grade Loop/Line Port Combination - Subsequer		NA	$10.00	$10.00	NA	$10.00	NA	$10.00	NA	$10.00
NRC - 2-Wire Voice Grade Loop/Line Port Combination - OSS LSR Charge, Electronic per LSR received from the CLEC by one of the OSS interactive interfaces	SOMEC	NA	$2.75	$3.50	NA	$3.50	NA	$3.50	NA	$3.50
NRC - 2-Wire Voice Grade Loop/Line Port Combination - Incremental Cost - Manua Svc.Order vs. Electronic - 1st	SOMAN	NA	$21.56	$33.76	NA	$31.92	NA	$40.18	NA	$30.89
NRC - 2-Wire Voice Grade Loop/Line Port Combination - Incremental Cost - Manua Svc.Order vs. Electronic - Add'l	SOMAN	NA	$21.56	$7.86	NA	$7.32	NA	$9.45	NA	$7.03
NRC- 2 Wire Voice Grade Loop/Line Port Combination - Subsequent Database Update Electronic		NA	TBD	TBD	NA	$2.11	NA	$1.42	NA	TBD
NRC- 2 Wire Voice Grade Loop/Line Port Combination - Subsequent Database Update Manual Service Order		NA	TBD	TBD	NA	$5.12	NA	$10.27	NA	TBD
NRC - Electronic Service Order Disconnec		NA	$0.42	NA	NA	NA	NA	NA	NA	NA
NRC - Incremental Manual Service Order Disconnec		NA	$3.84	$20.00	NA	$20.00	NA	$20.00	NA	$20.00
2-Wire Voice Grade Loop with 2-Wire Line Port PBX										
2-Wire Analog Line Port (PBX), per month										
2 WIRE VOICE UNBUNDLED COMBINATION 2-WAY PBX TRUNK - Residence	UEPRD	NA	$14.00	$14.00	NA	$14.00	NA	$14.00	NA	$14.00
LINE SIDE UNBUNDLED COMBINATION 2-WAY PBX TRUNK - BUSINESS	UEPPC	NA	$14.00	$14.00	NA	$14.00	NA	$14.00	NA	$14.00
LINE SIDE UNBUNDLED OUTWARD PBX TRUNK - BUSINESS	UEPPO	NA	$14.00	$14.00	NA	$14.00	NA	$14.00	NA	$14.00
LINE SIDE UNBUNDLED INCOMING PBX TRUNK - BUSINESS	UEPP1	NA	$14.00	$14.00	NA	$14.00	NA	$14.00	NA	$14.00
2-WIRE VOICE UNBUNDLED 2-WAY COMBINATION PBX ALABAMA CALLING PORT	UEPA2	NA	NA	NA	NA	NA	NA	NA	NA	NA

DESCRIPTION	USOC	AL	FL	GA	KY	LA	MS	NC	SC	TN
2-WIRE VOICE UNBUNDLED 2-WAY COMBINATION PBX LOUISIANA CALLING PORT	UEPL2	NA	NA	NA	NA	$14.00	NA	NA	NA	NA
2-WIRE VOICE UNBUNDLED PBX LD TERMINAL PORTS	UEPLD	NA	$14.00	$14.00	NA	$14.00	NA	$14.00	NA	$14.00
2-WIRE VOICE UNBUNDLED 2-WAY COMBINATION PBX TENNESSEE CALLING PORT	UEPT2	NA	NA	NA	NA	NA	NA	NA	NA	$14.00
2-WIRE VOICE UNBUNDLED 1-WAY OUTGOING PBX TENNESSEE CALLING PORT	UEPTO	NA	NA	NA	NA	NA	NA	NA	NA	$14.00
2-WIRE VOICE UNBUNDLED 2-WAY COMBINATION PBX USAGE POR	UEPXA	NA	$14.00	$14.00	NA	$14.00	NA	$14.00	NA	$14.00
2-WIRE VOICE UNBUNDLED PBX TOLL TERMINAL HOTEL PORTS	UEPXB	NA	$14.00	$14.00	NA	$14.00	NA	$14.00	NA	$14.00
2-WIRE VOICE UNBUNDLED PBX LD DDD TERMINALS POR	UEPXC	NA	$14.00	$14.00	NA	$14.00	NA	$14.00	NA	$14.00
2-WIRE VOICE UNBUNDLED PBX LD TERMINAL SWITCHBOARD POR	UEPXD	NA	$14.00	$14.00	NA	$14.00	NA	$14.00	NA	$14.00
2-WIRE VOICE UNBUNDLED PBX LD TERMINAL SWITCHBOARD IDD CAPABLE PORT	UEPXE	NA	$14.00	$14.00	NA	$14.00	NA	$14.00	NA	$14.00
2-WIRE VOICE UNBUNDLED 2-WAY PBX KENTUCKY ROOM AREA CALLING PORT WITHOUT LUD	UEPXF	NA	NA	NA	NA	NA	NA	NA	NA	NA
2-WIRE VOICE UNBUNDLED PBX KENTUCKY LUD AREA CALLING POR	UEPXG	NA	NA	NA	NA	NA	NA	NA	NA	NA
2-WIRE VOICE UNBUNDLED PBX KENTUCKY PREMIUM CALLING POR	UEPXH	NA	NA	NA	NA	NA	NA	NA	NA	NA
2-WIRE VOICE UNBUNDLED 2-WAY KENTUCKY AREA CALLING PORT WITHOUT LUD	UEPXJ	NA	NA	NA	NA	NA	NA	NA	NA	NA
2-WIRE VOICE UNBUNDLED 2-WAY PBX LOUISIANA LOCAL OPTIONAL CALLING PORT	UEPXK	NA	NA	NA	NA	$14.00	NA	NA	NA	NA
2-WIRE VOICE UNBUNDLED 2-WAY PBX HOTEL/HOSPITAL ECONOMY ADMINISTRATIVE CALLING PORT	UEPXL	NA	$14.00	$14.00	NA	$14.00	NA	$14.00	NA	$14.00
2-WIRE VOICE UNBUNDLED 2-WAY PBX HOTEL/HOSPITAL ECONOMY ROOM CALLING PORT	UEPXM	NA	$14.00	$14.00	NA	$14.00	NA	$14.00	NA	$14.00
2-WIRE VOICE UNBUNDLED 1-WAY OUTGOING PBX HOTEL/HOSPITAL ECONOMY ADMINIATRATIVE CALLING PORTTENNESSEE CALLING PORT	UEPXN	NA	NA	NA	NA	NA	NA	NA	NA	$14.00
2-WIRE VOICE UNBUNDLED 1-WAY OUTGOING PBX HOTEL/HOSPITAL DIACOUNT ROOM CALLING PORT	UEPXO	NA	$14.00	$14.00	NA	$14.00	NA	$14.00	NA	$14.00
2-WIRE VOICE UNBUNDLED 1-WAY OUTGOING PBX LOUISIANA LOCAL DISCOUNT CALLING PORT	UEPXP	NA	NA	NA	NA	$14.00	NA	NA	NA	NA
2-WIRE VOICE UNBUNDLED 2-WAY PBX MISSISSIPPI LOCAL ECONOMY CALLING PORT	UEPXQ	NA	NA	NA	NA	NA	NA	NA	NA	NA
2-WIRE VOICE UNBUNDLED 2-WAY PBX MISSISSIPPI LOCAL OPTIONAL CALLING PORT	UEPXR	NA	NA	NA	NA	NA	NA	NA	NA	NA
2-WIRE VOICE UNBUNDLED 1-WAY OUTGOING PBXMEASURED POR	UEPXS	NA	$14.00	$14.00	NA	$14.00	NA	$14.00	NA	$14.00
2-WIRE VOICE UNBUNDLED 2-WAY PBX SOUTH CAROLINA AREA PLUS CALLING PORT	UEPXT	NA	NA	NA	NA	NA	NA	NA	NA	NA
2-WIRE VOICE UNBUNDLED PBX COLLIERVILLE & MEMPHIS CALLING PORT	UEPXU	NA	NA	NA	NA	NA	NA	NA	NA	$14.00
2-WIRE VOICE UNBUNDLED 2-WAY PBX TENNESSEE REGIONSERV CALLING PORT	UEPXV	NA	NA	NA	NA	NA	NA	NA	NA	$14.00
LOCAL NUMBER PORTABILITY (REQUIRES ONE PER PORT)	LNPCP									
2-Wire Voice Grade Loop (SL1)										
RC - 2- Wire Voice Grade Loop - Statewide	UEPLX	NA	NA	NA	NA	NA	NA	$14.18	NA	NA
RC - 2- Wire Voice Grade Loop - Zone 1	UEPLX	NA	$14.90	$10.80	NA	$14.05	NA	NA	NA	$15.92
RC - 2- Wire Voice Grade Loop - Zone 2	UEPLX	NA	$18.51	$12.47	NA	$24.14	NA	NA	NA	$20.79
RC - 2- Wire Voice Grade Loop - Zone 3	UEPLX	NA	$24.25	$19.83	NA	$49.30	NA	NA	NA	$27.18
RC - 2- Wire Voice Grade Loop - Zone 4	UEPLX	NA	NA	NA	NA	NA	NA	NA	NA	NA
Combination Rates										
RC - 2-Wire Voice Grade Loop with 2-Wire Line Port, Statewide	Note 8	NA	NA	NA	NA	NA	NA	$28.18	NA	NA
RC - 2-Wire Voice Grade Loop with 2-Wire Line Port, Zone 1 (Note 6)	Note 8	NA	$28.90	$24.80	NA	$28.05	NA	NA	NA	$29.92
RC - 2-Wire Voice Grade Loop with 2-Wire Line Port, Zone 2 (Note 6)	Note 8	NA	$32.51	$26.47	NA	$38.14	NA	NA	NA	$34.79
RC - 2-Wire Voice Grade Loop with 2-Wire Line Port, Zone 3 (Note 6)	Note 8	NA	$38.25	$33.83	NA	$63.30	NA	NA	NA	$41.18
Nonrecurring Charges										
NRC - 2- wire voice grade unbundled port/loop combination - 1st, with chang		NA	$41.50	$41.50	NA	$41.50	NA	$41.50	NA	$41.50

DESCRIPTION	USOC	AL	FL	GA	KY	LA	MS	NC	SC	TN
NRC - 2- wire voice grade unbundled port/loop combination - Add'l, with chang		NA	$41.50	$41.50	NA	$41.50	NA	$41.50	NA	$41.50
NRC - 2- wire voice grade unbundled port/loop combination - 1st, no chang		NA	$41.50	$41.50	NA	$41.50	NA	$41.50	NA	$41.50
NRC - 2- wire voice grade unbundled port/loop combination - Add'l, no chang		NA	$41.50	$41.50	NA	$41.50	NA	$41.50	NA	$41.50
NRC - 2-Wire Voice Grade Loop/Line Port Combination - Subsequer		NA	$10.00	$10.00	$10.00	$10.00	NA	$10.00	NA	$10.00
NRC - 2-Wire Voice Grade Loop/Line Port Combination - OSS LSR Charge, Electronic per LSR received from the CLEC by one of the OSS interactive interfaces (Note 7)	SOMEC	NA	$2.75	$3.50	NA	$3.50	NA	$3.50	NA	$3.50
NRC - 2-Wire Voice Grade Loop/Line Port Combination - Incremental Cost - Manua Svc.Order vs. Electronic - 1st	SOMAN	NA	$21.56	$33.67	NA	$31.92	NA	$40.18	NA	$30.89
NRC - 2-Wire Voice Grade Loop/Line Port Combination - Incremental Cost - Manua Svc.Order vs. Electronic - Add'l	SOMAN	NA	$21.56	$7.88	NA	$7.32	NA	$9.45	NA	$7.03
NRC- 2 Wire Voice Grade Loop/Line Port Combination - Subsequent Database Update Electronic		NA	TBD	TBD	NA	$2.11	NA	$1.42	NA	TBD
NRC- 2 Wire Voice Grade Loop/Line Port Combination - Subsequent Database Update Manual Service Order		NA	TBD	TBD	NA	$5.12	NA	$10.27	NA	TBD
NRC - Electronic Service Order Disconnec		NA	$0.42	NA	NA	NA	NA	NA	NA	NA
NRC - Incremental Manual Service Order Disconnect		NA	$3.84	$20.00	NA	$20.00	NA	$20.00	NA	$20.00
COST BASED RATES (Notes 2 & 3)										
Currently Combined										
2-Wire Voice Grade Loop with 2-Wire Line Port										
2-Wire Voice Grade Line Port (Res.), per month										
2- wire voice unbundled port - residence	UEPRL	$2.20	$1.35	$1.79	$2.61	$2.55	$2.12	$2.28	$3.69	$4.54
2-wire voice unbundled port with caller ID - residenc	UEPRC	$2.20	$1.35	$1.79	$2.61	$2.55	$2.12	$2.28	$3.69	$4.54
2-wire voice unbundled port outgoing only - residenc	UEPRO	$2.20	$1.35	$1.79	$2.61	$2.55	$2.12	$2.28	$3.69	$4.54
2-wire voice grade unbundled Alabama extended local dialing parity port with caller ID	UEPAR	$2.20	NA	NA	NA	NA	NA	NA	NA	NA
2-wire voice grade unbundled Kentucky extended local dialing parity port with caller ID	UEPRM	NA	NA	NA	$2.61	NA	NA	NA	NA	NA
2-wire voice grade unbundled Louisiana extended local dialing parity port with caller ID	UEPAS	NA	NA	NA	NA	$2.55	NA	NA	NA	NA
2-wire voice grade unbundled Mississippi extended local dialing parity port with calle ID	UEPAT	NA	NA	NA	NA	NA	$2.12	NA	NA	NA
2-wire voice grade unbundled South Carolina extended local dialing parity port witl caller ID	UEPAU	NA	NA	NA	NA	NA	NA	NA	$3.69	NA
2-wire voice grade unbundled Tennessee extended local dialing parity port with calle ID	UEPAQ	NA	NA	NA	NA	NA	NA	NA	NA	$4.54
2-wire voice unbundled Florida area calling with caller ID - residenc	UEPAF	NA	$1.35	NA	NA	NA	NA	NA	NA	NA
2-wire voice unbundled Louisiana Area Plus with caller ID - residence (RUl	UEPAG	NA	NA	NA	NA	$2.55	NA	NA	NA	NA
2-wire voice unbundled Louisiana Area Plus with caller ID - residence (AC1	UEPAH	NA	NA	NA	NA	$2.55	NA	NA	NA	NA
2-wire voice unbundled South Carolina Area Calling port with Caller ID - residenc (LW8)	UEPAJ	NA	NA	NA	NA	NA	NA	NA	$3.69	NA
2-wire voice unbundled Tennessee Area Calling port with Caller ID - residence (F2R)	UEPAK	NA	NA	NA	NA	NA	NA	NA	NA	$4.54
2-wire voice unbundled Tennessee Area Calling port with Caller ID - residence (TACER)	UEPAL	NA	NA	NA	NA	NA	NA	NA	NA	$4.54
2-wire voice unbundled Tennessee Area Calling port with Caller ID - residence (TACSR)	UEPAM	NA	NA	NA	NA	NA	NA	NA	NA	$4.54
2-wire voice unbundled Tennessee Area Calling port with Caller ID - residence (1MF2X)	UEPAN	NA	NA	NA	NA	NA	NA	NA	NA	$4.54
2-wire voice unbundled Tennessee Area Calling port with Caller ID - residence (2MR)	UEPAO	NA	NA	NA	NA	NA	NA	NA	NA	$4.54

DESCRIPTION	USOC	AL	FL	GA	KY	LA	MS	NC	SC	TN
2-wire voice unbundled res, low usage line port with Caller ID (LUN	UEPAP	$2.20	$1.35	$1.79	$2.61	$2.55	$2.12	$2.28	$3.69	$4.54
2-Wire Voice Grade Line Port (Bus.), per month										
2-wire voice unbundled port without Caller ID	UEPBL	$2.20	$1.35	$1.79	$2.61	$2.55	$2.12	$2.28	$3.69	$4.54
2-wire voice unbundled port with unbundled port with Caller+E484 II	UEPBC	$2.20	$1.35	$1.79	$2.61	$2.55	$2.12	$2.28	$3.69	$4.54
2-wire voice unbundled outgoing only port	UEPBO	$2.20	$1.35	$1.79	$2.61	$2.55	$2.12	$2.28	$3.69	$4.54
2-wire voice grade unbundled Alabama extended local dialing parity port with caller ID	UEPAW	$2.20	NA	NA	NA	NA	NA	NA	NA	NA
2-wire voice grade unbundled Kentucky extended local dialing parity port with caller ID	UEPBM	NA	NA	NA	$2.61	NA	NA	NA	NA	NA
2-wire voice grade unbundled Louisiana extended local dialing parity port with caller ID	UEPAX	NA	NA	NA	NA	$2.55	NA	NA	NA	NA
2-wire voice grade unbundled Mississippi extended local dialing parity port with calle ID	UEPAY	NA	NA	NA	NA	NA	$2.12	NA	NA	NA
2-wire voice grade unbundled South Carolina extended local dialing parity port witl caller ID	UEPAZ	NA	NA	NA	NA	NA	NA	NA	$3.69	NA
2-wire voice grade unbundled Tennessee extended local dialing parity port with calle ID	UEPAV	NA	NA	NA	NA	NA	NA	NA	NA	$4.54
2-wire voice unbundled incoming only port with Caller II	UEPB1	$2.20	$1.35	$1.79	$2.61	$2.55	$2.12	$2.28	$3.69	$4.54
2-wire voice unbundled LA Bus Area Calling Port with Caller ID (BUC	UEPAA	NA	NA	NA	NA	$2.55	NA	NA	NA	NA
2-wire voice unbundled SC Bus Area Calling Port with Caller ID (LME	UEPAB	NA	NA	NA	NA	NA	NA	NA	$3.69	NA
2-wire voice unbundled TN Bus 2-Way Area Calling Port Economy Option (TACC1)	UEPAC	NA	NA	NA	NA	NA	NA	NA	NA	$4.54
2-wire voice unbundled TN Bus 2-Way Area Calling Port Standard Option (TACC2)	UEPAD	NA	NA	NA	NA	NA	NA	NA	NA	$4.54
2-wire voice unbundled TN Bus 2-WAY Collierville and Memphis Local Calling Por (B2F)	UEPAE	NA	NA	NA	NA	NA	NA	NA	NA	$4.54
2-Wire Voice Grade Loop (SL1)										
RC - 2- Wire Voice Grade Loop - Statewide	UEPLX	NA	NA	NA	NA	NA	NA	$14.18	NA	NA
RC - 2- Wire Voice Grade Loop - Zone 1	UEPLX	$14.35	$14.90	$10.80	$14.79	$14.05	$14.59	NA	$17.02	$12.48
RC - 2- Wire Voice Grade Loop - Zone 2	UEPLX	$23.31	$18.51	$12.47	$27.68	$24.14	$19.33	NA	$25.66	$14.42
RC - 2- Wire Voice Grade Loop - Zone 3	UEPLX	$42.24	$24.25	$19.83	$47.78	$49.30	$27.63	NA	$33.99	$21.77
RC - 2- Wire Voice Grade Loop - Zone 4	UEPLX	NA	NA	NA	NA	NA	$36.47	NA	NA	NA
Combination Rates										
RC - 2-Wire Voice Grade Loop with 2-Wire Line Port, Statewide	Note 8	NA	NA	NA	NA	NA	NA	$16.46	NA	NA
RC - 2-Wire Voice Grade Loop with 2-Wire Line Port, Zone 1 (Note 6)	Note 8	$16.55	$16.25	$12.59	$17.40	$16.60	$16.71	NA	$20.71	$17.02
RC - 2-Wire Voice Grade Loop with 2-Wire Line Port, Zone 2 (Note 6)	Note 8	$25.51	$19.86	$14.26	$30.29	$26.69	$21.45	NA	$29.35	$18.96
RC - 2-Wire Voice Grade Loop with 2-Wire Line Port, Zone 3 (Note 6)	Note 8	$44.44	$25.60	$21.62	$50.39	$51.85	$29.75	NA	$37.68	$26.31
RC - 2-Wire Voice Grade Loop with 2-Wire Line Port, Zone 4 (Note 6)	Note 8	NA	NA	NA	NA	NA	$38.59	NA	NA	NA
Nonrecurring Charges										
NRC - 2-Wire Voice Grade Loop/Line Port Combination - 1st, Switch as i	USAC2	$2.80	$0.1964	$2.01	$10.00	$3.80	$5.20	$2.77	$1.59	$1.03
NRC - 2-Wire Voice Grade Loop/Line Port Combination - Add'l, Switch as i	USAC2	$0.41	$0.1964	$0.3108	$10.00	$0.29	$0.41	$0.40	$0.40	$0.2886
NRC - 2-Wire Voice Grade Loop/Line Port Combination - 1st, Switch with chang	USACC	$2.80	$0.1964	$2.01	$10.00	$3.80	$5.20	$2.77	$1.59	$1.03
NRC - 2-Wire Voice Grade Loop/Line Port Combination - Add'l, Switch with change	USACC	$0.41	$0.1964	$0.3108	$10.00	$0.29	$0.41	$0.40	$0.40	$0.2886
NRC - 2-Wire Voice Grade Loop/Line Port Combination - Subsequer	USAS2	$10.00	$10.00	$10.00	$10.00	$10.00	$10.00	$10.00	$10.00	$10.00
NRC - 2-Wire Voice Grade Loop/Line Port Combination - OSS LSR Charge, Electronic per LSR received from the CLEC by one of the OSS interactive interfaces (Note 7)	SOMEC	$3.50	$2.75	$3.50	$3.50	$3.50	$3.50	$3.50	$3.50	$3.50
NRC - 2-Wire Voice Grade Loop/Line Port Combination - Incremental Cost - Manua Svc.Order vs. Electronic - 1st	SOMAN	$40.71	$21.56	$33.67	$19.99	$31.92	$43.52	$40.18	$43.19	$30.89
NRC - 2-Wire Voice Grade Loop/Line Port Combination - Incremental Cost - Manua Svc.Order vs. Electronic - Add'l	SOMAN	$9.58	$21.56	$7.88	$19.99	$7.32	$9.99	$9.45	$9.91	$7.03
NRC- 2 Wire Voice Grade Loop/Line Port Combination - Subsequent Database Update Electronic		$1.44	TBD	TBD	TBD	$2.11	$2.87	$1.42	$0.71	$0.76
NRC- 2 Wire Voice Grade Loop/Line Port Combination - Subsequent Database Update Manual Service Order		$8.25	TBD	TBD	TBD	$5.12	$6.88	$10.27	$8.91	$7.97
NRC - Electronic Service Order Disconnec		NA	$0.42	NA	NA	NA	NA	NA	NA	NA
NRC - Incremental Manual Service Order Disconnec		$20.00	$3.84	$20.00	$20.00	$20.00	$20.00	$20.00	$20.00	$20.00
NRCs for New (not Currently Combined) as ordered in Georgia										

DESCRIPTION	USOC	AL	FL	GA	KY	LA	MS	NC	SC	TN
NRC - 2-Wire Voice Grade Loop with 2-Wire Line Port - New - 1	UEPRL	NA	NA	$22.14	NA	NA	NA	NA	NA	NA
NRC - 2-Wire Voice Grade Loop with 2-Wire Line Port - New - Adc	UEPRL	NA	NA	$15.25	NA	NA	NA	NA	NA	NA
NRC - 2-Wire Voice Grade Loop with 2-Wire Line Port - New - 1	UEPRC	NA	NA	$22.14	NA	NA	NA	NA	NA	NA
NRC - 2-Wire Voice Grade Loop with 2-Wire Line Port - New - Adc	UEPRC	NA	NA	$15.25	NA	NA	NA	NA	NA	NA
NRC - 2-Wire Voice Grade Loop with 2-Wire Line Port - New - 1	UEPRO	NA	NA	$22.14	NA	NA	NA	NA	NA	NA
NRC - 2-Wire Voice Grade Loop with 2-Wire Line Port - New - Adc	UEPRO	NA	NA	$15.25	NA	NA	NA	NA	NA	NA
NRC - 2-Wire Voice Grade Loop with 2-Wire Line Port - New - 1	UEPAP	NA	NA	$22.14	NA	NA	NA	NA	NA	NA
NRC - 2-Wire Voice Grade Loop with 2-Wire Line Port - New - Adc	UEPAP	NA	NA	$15.25	NA	NA	NA	NA	NA	NA
NRC - 2-Wire Voice Grade Loop with 2-Wire Line Port - New - 1	UEPBL	NA	NA	$22.14	NA	NA	NA	NA	NA	NA
NRC - 2-Wire Voice Grade Loop with 2-Wire Line Port - New - Add'l	UEPBL	NA	NA	$15.25	NA	NA	NA	NA	NA	NA
NRC - 2-Wire Voice Grade Loop with 2-Wire Line Port - New - 1	UEPBC	NA	NA	$22.14	NA	NA	NA	NA	NA	NA
NRC - 2-Wire Voice Grade Loop with 2-Wire Line Port - New - Adc	UEPBC	NA	NA	$15.25	NA	NA	NA	NA	NA	NA
NRC - 2-Wire Voice Grade Loop with 2-Wire Line Port - New - 1	UEPBO	NA	NA	$22.14	NA	NA	NA	NA	NA	NA
NRC - 2-Wire Voice Grade Loop with 2-Wire Line Port - New - Adc	UEPBO	NA	NA	$15.25	NA	NA	NA	NA	NA	NA
NRC - 2-Wire Voice Grade Loop with 2-Wire Line Port - New - 1	UEPB1	NA	NA	$22.14	NA	NA	NA	NA	NA	NA
NRC - 2-Wire Voice Grade Loop with 2-Wire Line Port - New - Adc	UEPB1	NA	NA	$15.25	NA	NA	NA	NA	NA	NA
NRC - 2-Wire Voice Grade Loop/Line Port Combination - Subsequer	USAS2	NA	NA	$10.00	NA	NA	NA	NA	NA	NA
NRC - 2-Wire Voice Grade Loop with 2-Wire Line Port - New - Disconnect - 1		NA	NA	$8.45	NA	NA	NA	NA	NA	NA
NRC - 2-Wire Voice Grade Loop with 2-Wire Line Port - New - Disconnect - Adc		NA	NA	$3.91	NA	NA	NA	NA	NA	NA
NRC - 2-Wire Voice Grade Loop/Line Port Combination - OSS LSR Charge, Electronic per LSR received from the CLEC by one of the OSS interactive interfaces (Note 7)	SOMEC	NA	NA	$3.50	NA	NA	NA	NA	NA	NA
NRC - 2-Wire Voice Grade Loop with 2-Wire Line Port - Incremental Cost Manual vs Electronic - New - 1st		NA	NA	$37.06	NA	NA	NA	NA	NA	NA
NRC - 2-Wire Voice Grade Loop with 2-Wire Line Port - Incremental Cost Manual vs Electronic - New - Add'l		NA	NA	$8.19	NA	NA	NA	NA	NA	NA
NRC- 2 Wire Voice Grade Loop/Line Port Combination - Subsequent Database Update Electronic		NA	NA	TBD	NA	NA	NA	NA	NA	NA
NRC- 2 Wire Voice Grade Loop/Line Port Combination - Subsequent Database Update Manual Service Order		NA	NA	TBD	NA	NA	NA	NA	NA	NA
NRC - 2-Wire Voice Grade Loop with 2-Wire Line Port - Incremental Cost Manual vs Electronic - New - Disconnect		NA	NA	$11.17	NA	NA	NA	NA	NA	NA
2- Wire Voice Grade Loop - Bus Only with 2 -Wire DID Trunk Port										
2 - Wire Line Port - DID Trunk Port, per month	UEPD1	TBD	$9.36	$11.35	$10.84	$13.12	$14.63	$12.12	TBD	$8.78
2-Wire Voice Grade Loop (SL2)										
RC - 2- Wire Voice Grade Loop - Statewide	UECD1	NA	NA	NA	NA	NA	NA	$11.76	NA	NA
RC - 2- Wire Voice Grade Loop - Zone 1	UECD1	$17.95	$18.48	$16.84	$17.78	$17.65	$18.35	NA	$21.57	$9.60
RC - 2- Wire Voice Grade Loop - Zone 2	UECD1	$29.16	$22.43	$19.45	$23.96	$30.32	$24.33	NA	$32.53	$11.09
RC - 2- Wire Voice Grade Loop - Zone 3	UECD1	$52.84	$27.87	$30.92	$34.96	$61.93	$34.77	NA	$43.08	$16.74
RC - 2- Wire Voice Grade Loop - Zone 4	UECD1	NA	NA	NA	NA	NA	$45.88	NA	NA	NA
Combination Rates										
RC - 2-Wire Voice Grade Loop with 2-Wire DID Port, Statewide	Note 8	NA	NA	NA	NA	NA	NA	$23.79	NA	NA
RC - 2-Wire Voice Grade Loop with 2-Wire DID Port, Zone 1 (Note 6)	Note 8	28.72	$27.84	$28.19	28.72	$30.77	28.72	NA	28.72	$18.38
RC - 2-Wire Voice Grade Loop with 2-Wire DID Port, Zone 2 (Note 6)	Note 8	34.91	$31.79	$30.80	34.91	$43.44	34.91	NA	34.91	$19.87
RC - 2-Wire Voice Grade Loop with 2-Wire DID Port, Zone 3 (Note 6)	Note 8	45.9	$37.23	$42.27	45.9	$75.05	45.9	NA	45.9	$25.52
RC - 2-Wire Voice Grade Loop with 2-Wire DID Port, Zone4 (Note 6)	Note 8	NA	NA	NA	NA	NA	TBD	NA	NA	NA
NRC- 2- Wire Voice Grade Loop with 2- Wire DID Port - Conversion - Switch As Is - 1 port	USAC1	$14.62	$14.62	$166.08	TBD	$14.60	$14.60	$13.26	$14.62	$8.76
NRC- 2- Wire Voice Grade Loop with 2- Wire DID Port - Conversion - Switch As Is Each Addl Port	USAC1	$3.73	$3.73	$140.01	TBD	$3.72	$3.72	$8.39	$3.73	$5.75

DESCRIPTION	USOC	AL	FL	GA	KY	LA	MS	NC	SC	TN
NRC- 2- Wire Voice Grade Loop with 2- Wire DID Port - Conversion with changes - 1s port	USA1C	$14.62	$14.62	$166.08	TBD	$14.60	$14.60	$13.26	$14.62	$8.76
NRC- 2- Wire Voice Grade Loop with 2- Wire DID Port - Conversion with changes Each Addl port	USA1C	$3.73	$3.73	$140.01	TBD	$3.72	$3.72	$8.39	$3.73	$5.75
NRC - 2-Wire DID Subsequent Activity - Per Svc Order - Add Trunks, Per Trun	USAS1	$53.57	$53.57	NA	NA	$53.50	$53.50	NA	$53.57	NA
NRC - 2-Wire Voice Grade Loop/Line Port Combination - OSS LSR Charge, Electronic per LSR received from the CLEC by one of the OSS interactive interfaces (Note 7)	SOMEC	$3.50	$2.75	$3.50	$3.50	$3.50	$3.50	$3.50	$3.50	$3.50
NRC- 2- Wire Voice Grade Loop with 2- Wire DID Port - Incremental Cost- Manua Service Order - 1st	SOMAN	$19.99	$21.56	$37.88	$19.99	$19.99	$19.99	$53.89	$19.99	$41.43
NRC- 2- Wire Voice Grade Loop with 2- Wire DID Port - Incremental Cost- Manua Service Order - Addl	SOMAN	$19.99	$21.56	$16.84	$19.99	$19.99	$19.99	$11.34	$19.99	$9.80
NRC - Electronic Service Order Disconnec		$0.42	$0.42	$0.42	$0.42	$0.42	$0.42	$0.42	$0.42	$0.42
NRC - Incremental Manual Service Order Disconnec		$20.00	$3.84	$20.00	$20.00	$20.00	$20.00	$20.00	$20.00	$20.00
Telephone Number/Trunk Group Establishmen										
DID Trunk Termination (one required per port	NDT	$0.00	$0.00	$0.00	$0.00	$0.00	$0.00	$0.00	$0.00	$0.00
DID Numbers, Establish Trunk Group and Provide First Group of 20 DID Numbers (FL, GA, NC, & SC only)	NDZ	$0.00	$0.00	$0.00	$0.00	$0.00	$0.00	$0.00	$0.00	$0.00
DID Numbers, Establish Trunk Group and Provide First Group of 20 DID Numbers (AL, KY, LA, MS, & TN). In addition, Provides Additional DID Numbers for each Group of 2 DID Numbers (Valid in All States)	ND4	$0.00	$0.00	$0.00	$0.00	$0.00	$0.00	$0.00	$0.00	$0.00
DID Numbers, non-consective	ND5	$0.00	$0.00	$0.00	$0.00	$0.00	$0.00	$0.00	$0.00	$0.00
2-Wire ISDN Digital Grade Loop with 2-wire ISDN Digital Port										
2-wire ISDN Digital Port per month	UEPPB	$16.42	$8.51	$13.47	$12.99	$11.42	$51.91	$24.37	$33.74	$18.21
2-Wire ISDN Digital Grade Loop										
RC - 2-Wire ISDN Digital Grade Loop - Statewid	USL2X	NA	NA	NA	NA	NA	NA	$19.08	NA	NA
RC - 2-Wire ISDN Digital Grade Loop - Zone 1	USL2X	$23.23	$22.48	$21.89	$22.41	$28.87	$21.86	NA	$26.68	$16.20
RC - 2-Wire ISDN Digital Grade Loop - Zone 2	USL2X	$37.74	$27.90	$25.27	$31.10	$37.63	$28.97	NA	$40.24	$18.71
RC - 2-Wire ISDN Digital Grade Loop - Zone 3	USL2X	$68.38	$30.78	$40.17	$42.36	$48.42	$41.40	NA	$53.29	$28.25
RC - 2-Wire ISDN Digital Grade Loop - Zone 4	USL2X	NA	NA	NA	NA	NA	$54.64	NA	NA	NA
Combination Rates										
RC - 2-Wire ISDN Digital Grade Loop with 2-wire ISDN Digital Port - Statewide	Note 8	NA	NA	NA	NA	NA	NA	$43.45	NA	NA
RC - 2-Wire ISDN Digital Grade Loop with 2-wire ISDN Digital Port - Zone	Note 8	$39.65	$30.99	$35.36	$34.40	$34.84	$73.77	NA	$60.42	$34.41
RC - 2-Wire ISDN Digital Grade Loop with 2-wire ISDN Digital Port - Zone	Note 8	$54.16	$36.41	$38.74	$44.10	$43.20	$80.78	NA	$73.98	$36.92
RC - 2-Wire ISDN Digital Grade Loop with 2-wire ISDN Digital Port - Zone	Note 8	$84.80	$39.30	$53.64	$55.35	$59.69	$93.31	NA	$87.03	$46.46
RC - 2-Wire ISDN Digital Grade Loop with 2-wire ISDN Digital Port - Zone	Note 8	NA	NA	NA	NA	NA	$106.55	NA	NA	NA
NRC - 2-Wire ISDN Digital Grade Loop/2-wire ISDN Digital Port - 1st conversion	USACB	$79.12	$86.79	$239.95	$79.12	$79.01	$79.12	$174.35	$79.12	$117.23
NRC - 2-Wire ISDN Digital Grade Loop/2-wire ISDN Digital Port - Add'l conversion	USACB	$54.04	$54.04	$156.92	$54.04	$53.97	$54.04	$174.35	$54.04	$117.23
NRC - 2-Wire ISDN Digital Grade Loop/2-wire ISDN Digital Port - Non Feature Subsequent Activity	USASB	$53.50	$53.50	$53.50	$53.50	$53.50	$53.50	$53.50	$53.50	$212.88
NRC - 2-Wire Voice Grade Loop/Line Port Combination - OSS LSR Charge, Electronic per LSR received from the CLEC by one of the OSS interactive interfaces (Note 7)	SOMEC	$3.50	$2.75	$3.50	$3.50	$3.50	$3.50	$3.50	$3.50	$3.50
NRC - 2-Wire ISDN Digital Grade Loop/2-wire ISDN Digital Port - Incremental Cost Manual Service Order - 1st	SOMAN	$19.99	$21.56	$19.99	$19.99	$19.99	$19.99	$19.99	$19.99	$19.99
NRC - 2-Wire ISDN Digital Grade Loop/2-wire ISDN Digital Port - Incremental Cost Manual Service Order - Addl	SOMAN	$19.99	$21.56	$19.99	$19.99	$19.99	$19.99	$19.99	$19.99	$19.99
NRC - Electronic Service Order Disconnec		$0.42	$0.42	$0.42	$0.42	$0.42	$0.42	$0.42	$0.42	$0.42
NRC - Incremental Manual Service Order Disconnec		$20.00	$3.84	$20.00	$20.00	$20.00	$20.00	$20.00	$20.00	$20.00
4 - Wire DS1 Digital Loop with 4 - Wire ISDN DS1 Digital Trunk Port										
4 - Wire ISDN DS1 Digital Trunk Por	UEPPP	$186.02	$95.39	$163.16	$113.21	$107.55	$213.21	$179.01	$214.79	$78.40

DESCRIPTION	USOC	AL	FL	GA	KY	LA	MS	NC	SC	TN
4 - Wire DS1 Digital Loop										
RC - 4- Wire DS1 Digital Loop- Statewide	USL4P	NA	NA	NA	NA	NA	NA	$62.71	NA	NA
RC - 4- Wire DS1 Digital Loop- Zone 1	USL4P	$51.74	$92.48	$55.53	$106.04	$100.70	$50.99	NA	$59.61	$57.73
RC - 4- Wire DS1 Digital Loop- Zone 2	USL4P	$84.05	$119.68	$3.21	$135.15	$129.12	$67.58	NA	$89.90	$75.40
RC - 4- Wire DS1 Digital Loop- Zone 3	USL4P	$152.29	$194.70	$101.93	$186.26	$344.16	$96.58	NA	$119.06	$98.59
RC - 4-Wire DS1 Digital Loop - Zone 4	USL4P	NA	NA	NA	NA	NA	$127.47	NA	NA	NA
Combination Rates										
RC - 4-Wire DS1 Digital Loop with 4-wire ISDN DS1 Digital Port - Statewid	Note 8	NA	NA	NA	NA	NA	NA	$241.72	NA	NA
RC - 4-Wire DS1 Digital Loop with 4-wire ISDN DS1 Digital Port - Zone	Note 8	$237.76	$187.87	$218.69	$219.25	$208.25	$264.20	NA	$274.40	$136.13
RC - 4-Wire DS1 Digital Loop with 4-wire ISDN DS1 Digital Port - Zone	Note 8	$270.07	$215.07	$227.29	$248.36	$236.67	$280.79	NA	$304.69	$153.80
RC - 4-Wire DS1 Digital Loop with 4-wire ISDN DS1 Digital Port - Zone	Note 8	$338.31	$290.08	$265.09	$299.47	$451.57	$309.79	NA	$333.85	$176.99
RC - 4-Wire DS1 Digital Loop with 4-wire ISDN DS1 Digital Port - Zone	Note 8	NA	NA	NA	NA	NA	$340.68	NA	NA	NA
Local Number Portability										
Local Number Portability (1 per port	LNPCN	$1.75	$1.75	$1.75	$1.75	$1.75	$1.75	$1.75	$1.75	$1.75
Interface (Provsioning Only)										
Voice/Data	PR71V	$0.00	$0.00	$0.00	$0.00	$0.00	$0.00	$0.00	$0.00	$0.00
Digital Data	PR71D	$0.00	$0.00	$0.00	$0.00	$0.00	$0.00	$0.00	$0.00	$0.00
Inward Data	PR71E	$0.00	$0.00	$0.00	$0.00	$0.00	$0.00	$0.00	$0.00	$0.00
Non-Recurring Charges										
NRC - 4-Wire DS1 Digital Loop with 4-wire ISDN DS1 Digital Port Combination - 1s conversion	USACP	$240.30	$247.97	$269.96	$240.30	$239.95	$240.30	$481.51	$240.30	$328.53
NRC - 4-Wire DS1 Digital Loop with 4-wire ISDN DS1 Digital Port Combination - Add conversion	USACP	$157.17	$157.17	$269.96	$157.17	$156.94	$157.17	$481.51	$157.17	$328.53
NRC -4 - Wire DS1 Digital Loop with 4 - Wire ISDN DS1 Digital Trunk Port Subsequent Channel Activation - Per Channel	USASP	$29.06	$29.06	$28.71	$29.06	$29.01	$29.06	$36.92	$29.06	$28.39
NRC - 4-Wire DS1 Digital Loop with 4-wire ISDN DS1 Digital Port Combination Subsequent Inward/2-way Telephone Numbers	PR7TG	$0.98	$0.9804	$0.9686	$0.98	$0.98	$0.98	$1.17	$0.98	$0.9353
NRC - 4-Wire DS1 Digital Loop with 4-wire ISDN DS1 Digital Port Combination Subsequent Outward Telephone numbers	PR7TP	$23.02	$23.02	$22.75	$23.02	$22.99	$23.02	$28.17	$23.02	$22.36
NRC - 4-Wire DS1 Digital Loop with 4-wire ISDN DS1 Digital Port Combination Subsequent Inward Telephone Numbers	PR7ZT	$46.05	$46.05	$45.49	$46.05	$45.98	$46.05	$56.33	$46.05	$44.71
NRC - 4-Wire DS1 Digital Loop with 4-wire ISDN DS1 Digital Port Combination Subsequent Service Order Per Order	USASP	$147.47	$147.47	$147.47	$147.47	$147.47	$147.47	$255.25	$147.47	$189.76
NRC - 2-Wire Voice Grade Loop/Line Port Combination - OSS LSR Charge, Electronic per LSR received from the CLEC by one of the OSS interactive interfaces (Note 7)	SOMEC	$3.50	$2.75	$3.50	$3.50	$3.50	$3.50	$3.50	$3.50	$3.50
NRC - 4-Wire DS1 Digital Loop with 4-wire ISDN Digital Port - Incremental Cost Manual Service Order - 1st	SOMAN	$19.99	$21.56	$19.99	$19.99	$19.99	$19.99	$19.99	$19.99	$19.99
NRC - 4-Wire ISDN Digital Loop with 4-wire ISDN Digital Port - Incremental Cost Manual Service Order - Addl	SOMAN	$19.99	$21.56	$19.99	$19.99	$19.99	$19.99	$19.99	$19.99	$19.99
NRC - Electronic Service Order Disconnec		$0.42	$0.42	$0.42	$0.42	$0.42	$0.42	$0.42	$0.42	$0.42
NRC - Incremental Manual Service Order Disconnec		$20.00	$3.84	$20.00	$20.00	$20.00	$20.00	$20.00	$20.00	$20.00
4 - Wire DS1 Digital Loop with 4 - Wire DDITS Trunk Port										
4 - Wire DDITS Digital Trunk Port (Formerly DID Trunk Por	UDD1T	$130.23	$63.31	$120.80	$83.28	$149.27	$146.46	$123.65	TBD	$120.00
4 - Wire DS1 Digital Loop	USLDC									
4 - Wire DS1 Digital Loop - Statewide	USLDC	NA	NA		NA	NA	NA	$62.71	NA	NA
4 - Wire DS1 Digital Loop - Zone 1	USLDC	$51.74	$64.69	$55.53	$106.04	$56.32	$50.99	NA	$59.61	$57.73
4 - Wire DS1 Digital Loop - Zone 2	USLDC	$84.05	$94.71	$64.13	$135.15	$96.73	$67.58	NA	$89.90	$75.40
4 - Wire DS1 Digital Loop - Zone 3	USLDC	$152.29	$208.93	$101.93	$186.26	$197.57	$96.58	NA	$119.06	$98.59
4 - Wire DS1 Digital Loop - Zone 4	USLDC	NA	NA	NA	NA	NA	$127.47	NA	NA	NA
Combination Rates										
4 - Wire DS1 Digital Loop with 4 - Wire DDITS Trunk Port - Statewid	Note 8	NA	NA	NA	NA	NA	NA	$186.36	NA	NA
4 - Wire DS1 Digital Loop with 4 - Wire DDITS Trunk Port - Zone	Note 8	$181.97	$128.00	$176.33	$189.32	$205.59	$197.45	NA	TBD	$93.28
4 - Wire DS1 Digital Loop with 4 - Wire DDITS Trunk Port - Zone	Note 8	$214.28	$158.02	$184.93	$218.43	$246.00	$214.04	NA	TBD	$110.95
4 - Wire DS1 Digital Loop with 4 - Wire DDITS Trunk Port - Zone	Note 8	$282.52	$272.24	$222.73	$269.54	$346.84	$243.04	NA	TBD	$134.14
4 - Wire DS1 Digital Loop with 4 - Wire DDITS Trunk Port - Zone	Note 8	NA	NA	NA	NA	NA	$273.93	NA	NA	NA

DESCRIPTION	USOC	AL	FL	GA	KY	LA	MS	NC	SC	TN
Local number Portability per DSO Activatec	LNPCP	$3.15	$3.15	$3.15	$3.15	$3.15	$3.15	$3.15	$3.15	$3.15
Central Office Terminating Poin	CTG	$0.00	$0.00	$0.00	$0.00	$0.00	$0.00	$0.00	$0.00	$0.00
Telephone Number / Trunk Group establishmer										
Telephone Number for 2-Way Trunk Grou	UDTGX	$0.00	$0.00	$0.00	$0.00	$0.00	$0.00	$0.00	$0.00	$0.00
Telephone Number for 1-Way Outward Trunk Group	UDTGY	$0.00	$0.00	$0.00	$0.00	$0.00	$0.00	$0.00	$0.00	$0.00
Telephone Number for 1-Way Inward Trunk Group Without DID	UDTGZ	$0.00	$0.00	$0.00	$0.00	$0.00	$0.00	$0.00	$0.00	$0.00
DID Numbers, Establish Trunk Group and Provide First Group of 20 DID Numbers (FL, GA, NC, & SC only)	NDZ	$0.00	$0.00	$0.00	$0.00	$0.00	$0.00	$0.00	$0.00	$0.00
DID Numbers, Establish Trunk Group and Provide First Group of 20 DID Numbers (AL, KY, LA, MS, & TN). In addition, Provides Additional DID Numbers for each Group of 2 DID Numbers (Valid in All States)	ND4	$0.00	$0.00	$0.00	$0.00	$0.00	$0.00	$0.00	$0.00	$0.00
DID Numbers, Non- consecutive DID Numbers , Per Numbe	ND5	$0.00	$0.00	$0.00	$0.00	$0.00	$0.00	$0.00	$0.00	$0.00
Interoffice Channel Mileage - (Dedicated DS1) FX/FCO for 4 - Wire DS1 Digita Loop with 4 - Wire DDITS Trunk Port										
Fixed cost 0-8 miles (Facilities Termination	1LNO1	$79.69	$92.62	$63.39	$55.05	$93.40	$74.40	$71.29	$94.98	$75.83
Additional costs per mile 0-8 miles	1LNOA	$0.6920	$0.2000	$0.3068	$0.4500	$0.7831	$0.6598	$0.0783	$0.7598	$0.3525
Fixed cost 9-25 miles (Facilities Termination	1LN02	$0.00	$0.00	$0.00	$0.00	$0.00	$0.00	$0.00	$0.00	$0.00
additional costs per mile 9-25 miles	1LNOB	$0.6920	$0.2000	$0.3068	$0.4500	$0.7831	$0.6598	$0.0783	$0.7598	$0.3525
Fixed cost 25 + miles (Facilities Termination	1LNO3	$0.00	$0.00	$0.00	$0.00	$0.00	$0.00	$0.00	$0.00	$0.00
Additional costs 25 + miles	1LNOC	$0.6920	$0.2000	$0.3068	$0.4500	$0.7831	$0.6598	$0.0783	$0.7598	$0.3525
Enhanced Performance Charges										
Enhanced Performance Charges - as negotiated in contrac	UDTPC	TBN	TBN	TBN	TBN	TBN	TBN	TBN	TBN	TBN
Non-recurring Charges										
NRC - 4-Wire DS1 Digital Loop with 4-Wire DDITS Trunk Port Combination - OSS LSF Charge, Electronic, per LSR received from the CLEC by one of the OSS interactive interfaces (Note 7)	SOMEC	$3.50	$2.75	$3.50	$3.50	$3.50	$3.50	$3.50	$3.50	$3.50
NRC- 4-Wire DS1 Digital Loop with 4-Wire DDITS Trunk Port - Incremental Cost Manual Service Order - 1st	SOMAN	$19.99	$21.56	$37.88	$19.99	$19.99	$19.99	$19.99	$19.99	$19.99
NRC- 4-Wire DS1 Digital Loop with 4-Wire DDITS Trunk Port - Incremental Cost Manual Service Order - Add'l	SOMAN	$19.99	$21.56	$16.84	$19.99	$19.99	$19.99	$19.99	$19.99	$19.99
NRC - Electronic Service Order Disconnec		TBD	$0.42	TBD	TBD	TBD	TBD	TBD	TBD	TBD
NRC - Incremental Manual Service Order Disconnec		$20.00	$3.84	$20.00	$20.00	$20.00	$20.00	$20.00	$20.00	$20.00
NRC -4 - Wire DS1 Digital Loop with 4 - Wire DDITS Trunk Port -Conversion - Switc as is - 1st	USAC4	TBD	$268.82	$269.96	$261.15	$266.76	TBD	$490.38	TBD	$312.91
NRC -4 - Wire DS1 Digital Loop with 4 - Wire DDITS Trunk Port - Conversion - Switc as is - Additional	USAC4	TBD	$134.07	$269.96	$134.08	$123.16	TBD	$490.38	TBD	$312.91
NRC -4 - Wire DS1 Digital Loop with 4 - Wire DDITS Trunk Port - Conversion with DS changes - 1st	USAWA	TBD	$268.82	$269.96	$261.15	$266.76	TBD	$490.38	TBD	$312.91
NRC -4 - Wire DS1 Digital Loop with 4 - Wire DDITS Trunk Port - Conversion with DS Changes - Additional	USAWA	TBD	$134.07	$269.96	$134.08	$123.16	TBD	$490.38	TBD	$312.91
NRC -4 - Wire DS1 Digital Loop with 4 - Wire DDITS Trunk Port - Conversion wit Change - Trunks - 1st	USAWB	TBD	$268.82	$269.96	$261.15	$266.76	TBD	$490.38	TBD	$312.91
NRC -4 - Wire DS1 Digital Loop with 4 - Wire DDITS Trunk Port - Conversion wit Change - Trunks - Additional	USAWB	TBD	$134.07	$269.96	$134.08	$123.16	TBD	$490.38	TBD	$312.91
NRC -4 - Wire DS1 Digital Loop with 4 - Wire DDITS Digital Trunk Port - Subsequer Service Activity Per Service Order	USAS4	TBD	$54.00	$147.47	TBD	$68.57	TBD	$127.63	TBD	$94.88
NRC -4 - Wire DS1 Digital Loop with 4 - Wire DDITS Trunk Port - New - 1s	UDDIT	NA	NA	$858.30	NA	NA	NA	NA	NA	NA
NRC -4 - Wire DS1 Digital Loop with 4 - Wire DDITS Trunk Port - New - Additional	UDDIT	NA	NA	$514.02	NA	NA	NA	NA	NA	NA
NRC -4 - Wire DS1 Digital Loop with 4 - Wire DDITS Trunk Port - New - 1st Disconnect	UDDIT	NA	NA	TBD	NA	NA	NA	NA	NA	NA
NRC -4 - Wire DS1 Digital Loop with 4 - Wire DDITS Trunk Port - New - Additiona Disconnect	UDDIT	TBD	NA	TBD	TBD	NA	TBD	$11.98	TBD	$15.29
NRC -4 - Wire DS1 Digital Loop with 4 - Wire DDITS Trunk Port - Subsequent Channe Activation - Per Channel - 2-Way Trunk	UDTTA	TBD	$28.96	$28.71	$28.96	$26.60	TBD	$146.91	TBD	$108.67

DESCRIPTION	USOC	AL	FL	GA	KY	LA	MS	NC	SC	TN
NRC -4 - Wire DS1 Digital Loop with 4 - Wire DDITS Trunk Port - Subsequent Channe Activation - Per Channel - 1-Way Outward Trunk	UDTTB	TBD	$28.96	$28.71	$28.96	$26.60	TBD	$146.91	TBD	$108.67
NRC -4 - Wire DS1 Digital Loop with 4 - Wire DDITS Trunk Port - Subsequent Channe Activation - Per Channel - 1-Way Inward Trunk Without DID	UDTTC	TBD	$28.96	$28.71	$28.96	$26.60	TBD	$146.91	TBD	$108.67
NRC -4 - Wire DS1 Digital Loop with 4 - Wire DDITS Trunk Port - Subsequent Channe Activation - Per Channel - 1-Way Inward Trunk With DID	UDTTD	TBD	$28.96	$28.71	$28.96	$26.60	TBD	$146.91	TBD	$108.67
NRC -4 - Wire DS1 Digital Loop with 4 - Wire DDITS Trunk Port - Subsequent Channe Activation - Per Channel - 2-Way DID with User Transfer	UDTTE	TBD	$28.96	$28.71	$28.96	$26.60	TBD	$146.91	TBD	$108.67
NRC -4 - Wire DS1 Digital Loop with 4 - Wire DDITS Digital Trunk Port - Subsequer Signaling Changes		TBD	TBD	TBD	TBD	TBD	TBD	$29.65	TBD	$22.92
NRC -4 - Wire DS1 Digital Loop with 4 - Wire DDITS Digital Trunk Port - Subsequer Telephone Numbers		TBD	TBD	TBD	TBD	TBD	TBD	$120.96	TBD	$88.68
NRC - Interoffice Channel Mileage - (Dedicated DS1) FX/FCO for 4 - Wire DS1 Digital Loop with 4 - Wire DDITS Trunk PortFixed cost 0-8 miles (Facilities Termination) - 1st - New Only	1LNO1	$198.15	NA	$147.07	NA	NA	NA	NA	NA	NA
NRC - Interoffice Channel Mileage - (Dedicated DS1) FX/FCO for 4 - Wire DS1 Digital Loop with 4 - Wire DDITS Trunk PortFixed cost 0-8 miles (Facilities Termination) - Additional - New Only	1LNO2	$148.18	NA	$111.75	NA	NA	NA	NA	NA	NA
NRC - Interoffice Channel Mileage - (Dedicated DS1) FX/FCO for 4 - Wire DS1 Digital Loop with 4 - Wire DDITS Trunk PortFixed cost 0-8 miles (Facilities Termination) - Disconnect - 1st - New Only	1LNO3	$25.44	NA	NA	NA	NA	NA	NA	NA	NA
NRC - Interoffice Channel Mileage - (Dedicated DS1) FX/FCO for 4 - Wire DS1 Digital Loop with 4 - Wire DDITS Trunk PortFixed cost 0-8 miles (Facilities Termination) - Disconnect Additional - New Only	1LNO4	$20.42	NA	NA	NA	NA	NA	NA	NA	NA
BIPOLAR 8 ZERO SUSTITUTION										
NRC - Superframe Format - Conversion or new install 1st	CCOSF	$0.00	$0.00	$0.00	$0.00	$0.00	$0.00	$0.00	$0.00	$0.00
NRC - Superframe Format - Conversion or new install Additiona	CCOSF	$0.00	$0.00	$0.00	$0.00	$0.00	$0.00	$0.00	$0.00	$0.00
NRC - Extended Superframe Format - Change or Subsequent Activity - 1s	CCOSF	$0.00	$0.00	$0.00	$0.00	$0.00	$0.00	$0.00	$0.00	$0.00
NRC - Extended Superframe Format - Change or Subsequent Activity - Additiona	CCOSF	$600.00	$655.00	$600.00	$730.00	$605.00	$600.00	$615.00	$605.00	$590.00
NRC - Extended Superframe Format - Conversion or New Install 1s	CCOEF	$0.00	$0.00	$0.00	$0.00	$0.00	$0.00	$0.00	$0.00	$0.00
NRC - Extended Superframe Format - Conversion or New Install - Additiona	CCOEF	$0.00	$0.00	$0.00	$0.00	$0.00	$0.00	$0.00	$0.00	$0.00
NRC - Extended Superframe Format - Change or Subsequent Activity - 1s	CCOEF	$0.00	$0.00	$0.00	$0.00	$0.00	$0.00	$0.00	$0.00	$0.00
NRC - Extended Superframe Format - Change or Subsequent Activity - Additiona	CCOEF	$600.00	$655.00	$600.00	$730.00	$605.00	$600.00	$615.00	$605.00	$590.00
Alternate Mark Inversion (AM										
NRC - Superframe Format - 1s	MCOSF	$0.00	$0.00	$0.00	$0.00	$0.00	$0.00	$0.00	$0.00	$0.00
NRC - Superframe Format - Additiona	MCOSF	$0.00	$0.00	$0.00	$0.00	$0.00	$0.00	$0.00	$0.00	$0.00
NRC - Extended Superframe Format - 1s	MCOPO	$0.00	$0.00	$0.00	$0.00	$0.00	$0.00	$0.00	$0.00	$0.00
NRC - Extended Superframe Format - Additiona	MCOPO	$0.00	$0.00	$0.00	$0.00	$0.00	$0.00	$0.00	$0.00	$0.00
2-Wire Voice Grade Loop with 2-Wire Line Port PBX										
2-Wire Analog Line Port (PBX), per month										
2 WIRE VOICE UNBUNDLED COMBINATION 2-WAY PBX TRUNK - Residence	UEPRD	$2.20	$1.35	$1.79	$2.61	$2.55	$2.12	$2.28	$3.69	$4.54
LINE SIDE UNBUNDLED COMBINATION 2-WAY PBX TRUNK - BUSINESS	UEPPC	$2.20	$1.35	$1.79	$2.61	$2.55	$2.12	$2.28	$3.69	$4.54
LINE SIDE UNBUNDLED OUTWARD PBX TRUNK - BUSINESS	UEPPO	$2.20	$1.35	$1.79	$2.61	$2.55	$2.12	$2.28	$3.69	$4.54
LINE SIDE UNBUNDLED INCOMING PBX TRUNK - BUSINESS	UEPP1	$2.20	$1.35	$1.79	$2.61	$2.55	$2.12	$2.28	$3.69	$4.54
2-WIRE VOICE UNBUNDLED 2-WAY COMBINATION PBX ALABAMA CALLING PORT	UEPA2	$2.20	NA	NA	NA	NA	NA	NA	NA	NA
2-WIRE VOICE UNBUNDLED 2-WAY COMBINATION PBX LOUISIANA CALLING PORT	UEPL2	NA	NA	NA	NA	$2.55	NA	NA	NA	NA
2-WIRE VOICE UNBUNDLED PBX LD TERMINAL PORTS	UEPLD	$2.20	$1.35	$1.79	$2.61	$2.55	$2.12	$2.28	$3.69	$4.54
2-WIRE VOICE UNBUNDLED 2-WAY COMBINATION PBX TENNESSEE CALLING PORT	UEPT2	NA	NA	NA	NA	NA	NA	NA	NA	$4.54

DESCRIPTION	USOC	AL	FL	GA	KY	LA	MS	NC	SC	TN
2-WIRE VOICE UNBUNDLED 1-WAY OUTGOING PBX TENNESSEE CALLING PORT	UEPTO	NA	NA	NA	NA	NA	NA	NA	NA	$4.54
2-WIRE VOICE UNBUNDLED 2-WAY COMBINATION PBX USAGE POR	UEPXA	$2.20	$1.35	$1.79	$2.61	$2.55	$2.12	$2.28	$3.69	$4.54
2-WIRE VOICE UNBUNDLED PBX TOLL TERMINAL HOTEL PORTS	UEPXB	$2.20	$1.35	$1.79	$2.61	$2.55	$2.12	$2.28	$3.69	$4.54
2-WIRE VOICE UNBUNDLED PBX LD DDD TERMINALS POR	UEPXC	$2.20	$1.35	$1.79	$2.61	$2.55	$2.12	$2.28	$3.69	$4.54
2-WIRE VOICE UNBUNDLED PBX LD TERMINAL SWITCHBOARD POR	UEPXD	$2.20	$1.35	$1.79	$2.61	$2.55	$2.12	$2.28	$3.69	$4.54
2-WIRE VOICE UNBUNDLED PBX LD TERMINAL SWITCHBOARD IDD CAPABLE PORT	UEPXE	$2.20	$1.35	$1.79	$2.61	$2.55	$2.12	$2.28	$3.69	$4.54
2-WIRE VOICE UNBUNDLED 2-WAY PBX KENTUCKY ROOM AREA CALLING PORT WITHOUT LUD	UEPXF	NA	NA	NA	$2.61	NA	NA	NA	NA	NA
2-WIRE VOICE UNBUNDLED PBX KENTUCKY LUD AREA CALLING POR	UEPXG	NA	NA	NA	$2.61	NA	NA	NA	NA	NA
2-WIRE VOICE UNBUNDLED PBX KENTUCKY PREMIUM CALLING POR	UEPXH	NA	NA	NA	$2.61	NA	NA	NA	NA	NA
2-WIRE VOICE UNBUNDLED 2-WAY KENTUCKY AREA CALLING PORT WITHOUT LUD	UEPXJ	NA	NA	NA	$2.61	NA	NA	NA	NA	NA
2-WIRE VOICE UNBUNDLED 2-WAY PBX LOUISIANA LOCAL OPTIONAL CALLING PORT	UEPXK	NA	NA	NA	NA	$2.55	NA	NA	NA	NA
2-WIRE VOICE UNBUNDLED 2-WAY PBX HOTEL/HOSPITAL ECONOMY ADMINISTRATIVE CALLING PORT	UEPXL	$2.20	$1.35	$1.79	$2.61	$2.55	$2.12	$2.28	$3.69	$4.54
2-WIRE VOICE UNBUNDLED 2-WAY PBX HOTEL/HOSPITAL ECONOMY ROOM CALLING PORT	UEPXM	$2.20	$1.35	$1.79	$2.61	$2.55	$2.12	$2.28	$3.69	$4.54
2-WIRE VOICE UNBUNDLED 1-WAY OUTGOING PBX HOTEL/HOSPITAL ECONOMY ADMINIATRATIVE CALLING PORTTENNESSEE CALLING PORT	UEPXN	NA	NA	NA	NA	NA	NA	NA	NA	$4.54
2-WIRE VOICE UNBUNDLED 1-WAY OUTGOING PBX HOTEL/HOSPITAL DIACOUNT ROOM CALLING PORT	UEPXO	$2.20	$1.35	$1.79	$2.61	$2.55	$2.12	$2.28	$3.69	$4.54
2-WIRE VOICE UNBUNDLED 1-WAY OUTGOING PBX LOUISIANA LOCAL DISCOUNT CALLING PORT	UEPXP	NA	NA	NA	NA	$2.55	NA	NA	NA	NA
2-WIRE VOICE UNBUNDLED 2-WAY PBX MISSISSIPPI LOCAL ECONOMY CALLING PORT	UEPXQ	NA	NA	NA	NA	NA	$2.12	NA	NA	NA
2-WIRE VOICE UNBUNDLED 2-WAY PBX MISSISSIPPI LOCAL OPTIONAL CALLING PORT	UEPXR	NA	NA	NA	NA	NA	$2.12	NA	NA	NA
2-WIRE VOICE UNBUNDLED 1-WAY OUTGOING PBXMEASURED POR	UEPXS	$2.20	$1.35	$1.79	$2.61	$2.55	$2.12	$2.28	$3.69	$4.54
2-WIRE VOICE UNBUNDLED 2-WAY PBX SOUTH CAROLINA AREA PLUS CALLING PORT	UEPXT	NA	NA	NA	NA	NA	NA	NA	$3.69	NA
2-WIRE VOICE UNBUNDLED PBX COLLIERVILLE & MEMPHIS CALLING PORT	UEPXU	NA	NA	NA	NA	NA	NA	NA	NA	$4.54
2-WIRE VOICE UNBUNDLED 2-WAY PBX TENNESSEE REGIONSERV CALLING PORT	UEPXV	NA	NA	NA	NA	NA	NA	NA	NA	$4.54
LOCAL NUMBER PORTABILITY (REQUIRES ONE PER PORT)	LNPCP									
2-Wire Voice Grade Loop (SL1)										
RC - 2- Wire Voice Grade Loop - Statewide	UEPLX	NA	NA	NA	NA	NA	NA	$14.18	NA	NA
RC - 2- Wire Voice Grade Loop - Zone 1	UEPLX	$14.35	$14.90	$10.80	$14.79	$14.05	$14.59	NA	$17.02	$12.48
RC - 2- Wire Voice Grade Loop - Zone 2	UEPLX	$23.31	$18.51	$12.47	$27.68	$24.14	$19.33	NA	$25.66	$14.42
RC - 2- Wire Voice Grade Loop - Zone 3	UEPLX	$42.24	$24.25	$19.83	$47.78	$49.30	$27.63	NA	$33.99	$21.77
RC - 2- Wire Voice Grade Loop - Zone 4	UEPLX	NA	NA	NA	NA	NA	$36.47	NA	NA	NA
Combination Rates										
RC - 2-Wire Voice Grade Loop with 2-Wire Line Port, Statewide	Note 8	NA	NA	NA	NA	NA	NA	$16.46	NA	NA
RC - 2-Wire Voice Grade Loop with 2-Wire Line Port, Zone 1 (Note 6)	Note 8	$16.55	$16.25	$12.59	#VALUE!	$16.60	$16.71	NA	$20.71	$17.02
RC - 2-Wire Voice Grade Loop with 2-Wire Line Port, Zone 2 (Note 6)	Note 8	$25.51	$19.86	$14.26	#VALUE!	$26.69	$21.45	NA	$29.35	$18.96
RC - 2-Wire Voice Grade Loop with 2-Wire Line Port, Zone 3 (Note 6)	Note 8	$44.44	$25.60	$21.62	#VALUE!	$51.85	$29.75	NA	$37.68	$26.31
RC - 2-Wire Voice Grade Loop with 2-Wire Line Port, Zone 4 (Note 6)	Note 8	NA	NA	NA	NA	NA	$38.59	NA	NA	NA
Nonrecurring Charges										
NRC - 2-Wire Voice Grade Loop/Line Port Combination - 1st, Switch as i	USAC2	$2.80	$15.82	$2.01	$10.00	$3.80	$5.20	$2.77	$1.59	$1.03
NRC - 2-Wire Voice Grade Loop/Line Port Combination - Add'l, Switch as i	USAC2	$0.41	$3.80	$0.3108	$10.00	$0.29	$0.41	$0.40	$0.40	$0.2886
NRC - 2-Wire Voice Grade Loop/Line Port Combination - 1st, Switch with chang	USACC	$2.80	$15.82	$2.01	$10.00	$3.80	$5.20	$2.77	$1.59	$1.03

DESCRIPTION	USOC	AL	FL	GA	KY	LA	MS	NC	SC	TN
NRC - 2-Wire Voice Grade Loop/Line Port Combination - Add'l, Switch with change	USACC	$0.41	$3.80	$0.3108	$10.00	$0.29	$0.41	$0.40	$0.40	$0.2886
NRC - 2-Wire Voice Grade Loop/Line Port Combination - Subsequer	USAS2	$10.00	$10.00	$10.00	$10.00	$10.00	$10.00	$10.00	$10.00	$10.00
NRC - 2-Wire Voice Grade Loop/Line Port Combination - OSS LSR Charge, Electronic per LSR received from the CLEC by one of the OSS interactive interfaces (Note 7)	SOMEC	$3.50	$2.75	$3.50	$3.50	$3.50	$3.50	$3.50	$3.50	$3.50
NRC - 2-Wire Voice Grade Loop/Line Port Combination - Incremental Cost - Manua Svc.Order vs. Electronic - 1st	SOMAN	$40.71	$21.56	$33.67	$19.99	$31.92	$43.52	$40.18	$43.19	$30.89
NRC - 2-Wire Voice Grade Loop/Line Port Combination - Incremental Cost - Manua Svc.Order vs. Electronic - Add'l	SOMAN	$9.58	$21.56	$7.88	$19.99	$7.32	$0.99	$9.45	$9.91	$7.03
NRC- 2 Wire Voice Grade Loop/Line Port Combination - Subsequent Database Update Electronic		$1.44	TBD	TBD	TBD	$2.11	$2.87	$1.42	$0.71	$0.76
NRC- 2 Wire Voice Grade Loop/Line Port Combination - Subsequent Database Update Manual Service Order		$8.25	TBD	TBD	TBD	$5.12	$6.88	$10.27	$8.91	$7.97
NRC - Electronic Service Order Disconnec		TBD	$0.42	TBD	TBD	TBD	TBD	TBD	TBD	TBD
NRC - Incremental Manual Service Order Disconnec		$20.00	$3.84	$20.00	$20.00	$20.00	$20.00	$20.00	$20.00	$20.00
NRCs for New (not Currently Combined) as ordered in Georgia										
NRC - 2-Wire Voice Grade Loop with 2-Wire Line Port - New - 1s	UEPRD	NA	NA	$22.14	NA	NA	NA	NA	NA	NA
NRC - 2-Wire Voice Grade Loop with 2-Wire Line Port - New - Adc	UEPRD	NA	NA	$15.25	NA	NA	NA	NA	NA	NA
NRC - 2-Wire Voice Grade Loop with 2-Wire Line Port - New - 1s	UEPPC	NA	NA	$22.14	NA	NA	NA	NA	NA	NA
NRC - 2-Wire Voice Grade Loop with 2-Wire Line Port - New - Adc	UEPPC	NA	NA	$15.25	NA	NA	NA	NA	NA	NA
NRC - 2-Wire Voice Grade Loop with 2-Wire Line Port - New - 1s	UEPPO	NA	NA	$22.14	NA	NA	NA	NA	NA	NA
NRC - 2-Wire Voice Grade Loop with 2-Wire Line Port - New - Adc	UEPPO	NA	NA	$15.25	NA	NA	NA	NA	NA	NA
NRC - 2-Wire Voice Grade Loop with 2-Wire Line Port - New - 1s	UEPP1	NA	NA	$22.14	NA	NA	NA	NA	NA	NA
NRC - 2-Wire Voice Grade Loop with 2-Wire Line Port - New - Adc	UEPP1	NA	NA	$15.25	NA	NA	NA	NA	NA	NA
NRC - 2-Wire Voice Grade Loop with 2-Wire Line Port - New - 1s	UEPLD	NA	NA	$22.14	NA	NA	NA	NA	NA	NA
NRC - 2-Wire Voice Grade Loop with 2-Wire Line Port - New - Adc	UEPLD	NA	NA	$15.25	NA	NA	NA	NA	NA	NA
NRC - 2-Wire Voice Grade Loop with 2-Wire Line Port - New - 1s	UEPXA	NA	NA	$22.14	NA	NA	NA	NA	NA	NA
NRC - 2-Wire Voice Grade Loop with 2-Wire Line Port - New - Adc	UEPXA	NA	NA	$15.25	NA	NA	NA	NA	NA	NA
NRC - 2-Wire Voice Grade Loop with 2-Wire Line Port - New - 1st	UEPXB	NA	NA	$22.14	NA	NA	NA	NA	NA	NA
NRC - 2-Wire Voice Grade Loop with 2-Wire Line Port - New - Add'l	UEPXB	NA	NA	$15.25	NA	NA	NA	NA	NA	NA
NRC - 2-Wire Voice Grade Loop with 2-Wire Line Port - New - 1s	UEPXC	NA	NA	$22.14	NA	NA	NA	NA	NA	NA
NRC - 2-Wire Voice Grade Loop with 2-Wire Line Port - New - Adc	UEPXC	NA	NA	$15.25	NA	NA	NA	NA	NA	NA
NRC - 2-Wire Voice Grade Loop with 2-Wire Line Port - New - 1s	UEPXD	NA	NA	$22.14	NA	NA	NA	NA	NA	NA
NRC - 2-Wire Voice Grade Loop with 2-Wire Line Port - New - Adc	UEPXD	NA	NA	$15.25	NA	NA	NA	NA	NA	NA
NRC - 2-Wire Voice Grade Loop with 2-Wire Line Port - New - 1s	UEPXE	NA	NA	$22.14	NA	NA	NA	NA	NA	NA
NRC - 2-Wire Voice Grade Loop with 2-Wire Line Port - New - Adc	UEPXE	NA	NA	$15.25	NA	NA	NA	NA	NA	NA
NRC - 2-Wire Voice Grade Loop with 2-Wire Line Port - New - 1s	UEPXL	NA	NA	$22.14	NA	NA	NA	NA	NA	NA
NRC - 2-Wire Voice Grade Loop with 2-Wire Line Port - New - Adc	UEPXL	NA	NA	$15.25	NA	NA	NA	NA	NA	NA
NRC - 2-Wire Voice Grade Loop with 2-Wire Line Port - New - 1s	UEPXM	NA	NA	$22.14	NA	NA	NA	NA	NA	NA
NRC - 2-Wire Voice Grade Loop with 2-Wire Line Port - New - Add'l	UEPXM	NA	NA	$15.25	NA	NA	NA	NA	NA	NA
NRC - 2-Wire Voice Grade Loop with 2-Wire Line Port - New - 1s	UEPXO	NA	NA	$22.14	NA	NA	NA	NA	NA	NA
NRC - 2-Wire Voice Grade Loop with 2-Wire Line Port - New - Adc	UEPXO	NA	NA	$15.25	NA	NA	NA	NA	NA	NA
NRC - 2-Wire Voice Grade Loop with 2-Wire Line Port - New - 1s	UEPXS	NA	NA	$22.14	NA	NA	NA	NA	NA	NA
NRC - 2-Wire Voice Grade Loop with 2-Wire Line Port - New - Adc	UEPXS	NA	NA	$15.25	NA	NA	NA	NA	NA	NA
NRC - 2-Wire Voice Grade Loop/Line Port Combination - Subsequer	USAS2	NA	NA	$10.00	NA	NA	NA	NA	NA	NA
NRC - 2-Wire Voice Grade Loop with 2-Wire Line Port - New - Disconnect - 1		NA	NA	$8.45	NA	NA	NA	NA	NA	NA
NRC - 2-Wire Voice Grade Loop with 2-Wire Line Port - New - Disconnect - Adc		NA	NA	$3.91	NA	NA	NA	NA	NA	NA
NRC - 2-Wire Voice Grade Loop/Line Port Combination - OSS LSR Charge, Electronic per LSR received from the CLEC by one of the OSS interactive interfaces (Note 7)	SOMEC	NA	NA	$3.50	NA	NA	NA	NA	NA	NA

DESCRIPTION	USOC	AL	FL	GA	KY	LA	MS	NC	SC	TN
NRC - 2-Wire Voice Grade Loop with 2-Wire Line Port - Incremental Cost Manual vs Electronic - New - 1st		NA	NA	$37.06	NA	NA	NA	NA	NA	NA
NRC - 2-Wire Voice Grade Loop with 2-Wire Line Port - Incremental Cost Manual vs Electronic - New - Add'l		NA	NA	$8.19	NA	NA	NA	NA	NA	NA
NRC- 2 Wire Voice Grade Loop/Line Port Combination - Subsequent Database Update Electronic		NA	NA	TBD	NA	NA	NA	NA	NA	NA
NRC- 2 Wire Voice Grade Loop/Line Port Combination - Subsequent Database Update Manual Service Order		NA	NA	TBD	NA	NA	NA	NA	NA	NA
NRC - 2-Wire Voice Grade Loop with 2-Wire Line Port - Incremental Cost Manual vs Electronic - New - Disconnect		NA	NA	$11.17	NA	NA	NA	NA	NA	NA
All Other Loop/Port Combinations		TBD	TBD	Note 2	TBD	TBD	TBD	TBD	TBD	TBD
LOCAL NUMBER PORTABILITY (REQUIRES ONE PER PORT	LNPCX									
NOTES:										
Interim rates subject to true-up										
1 Market Rates will apply in those areas where BellSouth is not required to provide circu switching pursuant to FCC rules.										
2 In Georgia, rates will apply for Currently Combined as well as not Currently Combine loop/port combinations unless otherwise identified.										
3 In the absence of ordered rates by a State Commission, the recurring rates fo Currently Combined combinations of loop/port network elements will be the sum of the recurring rates for the UNEs which make up the combinations, and the nonrecurring rates shall be as set forth in this section.										
4 End Office and Tandem Switching Usage and Common Transport Usage rates in the Port section of this rate exhibit shall apply to all combinations of loop/port network elements.										
5 Deleted										
6 Geographically Deaveraged UNE Zones and applicable rates have been established for certain services, as shown in this Agreement. Where Geographically Deaveraged UNE Zones and applicable rates are established, Statewide rates are obsolete. Further, BellSouth is in the process of enhancing its billing systems in order to accomodate this Geographically Deaveraged UNE Zone Rate Structure. Until these enhancements are accomplished, estimated to be mid 2001, the UNE Zone 1 rate will be billed for all services residing in Zones 1, 2, 3 or 4, i.e., Rates for services residing i UNE Zones 2, 3 and UNE Zone 4, where applicable, will not be billed. Once billing enhancements are complete, all applicable UNE Zone rates reflected in this Agreement will be billed. Reference Internet Website http://www.interconnection.bellsouth.com/become_clec/ docs/interconnection/deavuzns.pdf to view Geographically Deaveraged UNE Zone Designations by Central Office										
7 In the absence of ordered OSS rates by a state commission, BellSouth will offer regionwide rates										
8 There is not a unique combination USOC. CLEC should submit the loop and port USOCs.										
9 Rates in TN and FL are interim and shall be trued-up when final rates are ordered.										

ENHANCED EXTENDED LINKS (EELs)										
New EEL rates are the sum of the individual UNE network elements (interoffice transport and loop [channelization if applicable].										
DS1 Interoffice Channel and 2-wire VG Local Loop EEL:	**USOC**	**AL**	**FL**	**GA**	**KY**	**LA**	**MS**	**NC**	**SC**	**TN**
Recurring Charges										
2-wire VG Loop per month, statewide	UEAL2	NA	NA	NA	NA	NA	NA	$19.50	NA	NA
2-wire VG Loop per month, Zone 1 (Note 1)	UEAL2	NA	$20.52	$15.40	NA	$17.65	NA	TBD	NA	$15.54
2-wire VG Loop per month, Zone 2 (Note 1)	UEAL2	NA	TBD	$17.78	NA	$30.32	NA	TBD	NA	$19.55
2-wire VG Loop per month, Zone 3 (Note 1)	UEAL2	NA	TBD	$28.26	NA	$61.93	NA	TBD	NA	$28.02
2-wire VG Loop per month, Zone 4 (Note 1)	NA	NA	NA	NA	NA	NA	NA	NA	NA	NA
Interoffice Channel - Dedicated - DS1 - per mile per month	1L5XX	NA	$0.6013	$0.4523	NA	$0.7831	NA	$0.5753	NA	$0.3525
Interoffice Channel - Dedicated - DS1 - Facility Termination per month	U1TF1	NA	$99.79	$78.47	NA	$93.40	NA	$71.29	NA	$75.83
DS1 Channelized System per month	MQ1	NA	$153.60	$18.23	NA	$209.87	NA	$177.72	NA	$165.21
VG (COCI) interface card per month	1D1VG	NA	$1.45	$2.20	NA	$1.62	NA	$1.64	NA	$1.25
Non-Recurring Charges - New EEL (Note 2)(Note 3)										
NRC- DS1 interoffice Facility Termination - 1st	U1TF1	NA	$171.01	$142.64	NA	$160.49	NA	$217.17	NA	$165.53
NRC-DS1 interoffice Facility Termination - Add'l	U1TF1	NA	$101.84	$94.87	NA	$123.03	NA	$163.75	NA	$124.84
NRC-2-wire VG Local Loop - 1st	UEAL2	NA	$38.02	$77.54	NA	$128.42	NA	$142.97	NA	$103.76
NRC-2-wire VG Local Loop - Add'l	UEAL2	NA	$35.15	$51.57	NA	$93.60	NA	$106.56	NA	$65.84
NRC-DS1 Channelization System -1st	MQ1	NA	$275.18	$206.09	NA	$220.07	NA	$193.63	NA	$222.87
NRC-DS1 Channelization System - Add'l	MQ1	NA	$137.77	$137.06	NA	$135.20	NA	$118.37	NA	$135.80
NRC-VG(COCI)interface card -1st	1D1VG	NA	$12.16	$12.02	NA	$12.29	NA	$15.76	NA	$12.61
NRC-VG(COCI)interface card - Add'	1D1VG	NA	$8.77	$8.66	NA	$8.80	NA	$11.28	NA	$9.03
NRC- 2-wire VG Local Loop and Channelized DS1 Interoffice Combination - Electron	SOMEC	NA	$3.17	$3.50	NA	$3.50	NA	$3.50	NA	$3.50
NRC- 2-wire VG Local Loop and Channelized DS1 Interoffice Combination - Manual	SOMAN	NA	$25.40	NA	NA	NA	NA	NA	NA	$19.99
NRC- 2-wire VG Local Loop and Channelized DS1 Interoffice Combination - Manual	SOMAN	NA	NA	$33.63	NA	$242.20	NA	$66.20	NA	NA
NRC- 2-wire VG Local Loop and Channelized DS1 Interoffice Combination - Manual	SOMAN	NA	NA	$27.49	NA	$153.37	NA	$51.40	NA	NA
NRC- 2-wire VG Local Loop and Channelized DS1 Interoffice Combination - Manual	SOMAN	NA	NA	$19.88	NA	$45.91	NA	NA	NA	NA
NRC- 2-wire VG Local Loop and Channelized DS1 Interoffice Combination - Manual	SOMAN	NA	NA	$11.85	NA	$8.06	NA	NA	NA	NA
DS1 Interoffice Channel and 4-wire VG Local Loop EEL:										
Recurring Charges										
4-wire VG Loop per month	UEAL4	NA	NA	NA	NA	NA	NA	$27.49	NA	NA
4-wire VG Loop per month, Zone 1 (Note 1)	UEAL4	NA	$24.26	$22.88	NA	$24.36	NA	NA	NA	$15.92
4-wire VG Loop per month, Zone 2 (Note 1)	UEAL4	NA	$35.51	$26.42	NA	$41.85	NA	NA	NA	$20.79
4-wire VG Loop per month, Zone 3 (Note 1)	UEAL4	NA	$78.35	$41.99	NA	$86.47	NA	NA	NA	$27.18
4-wire VG Loop per month, Zone 4 (Note 1)	NA	NA	NA	NA	NA	NA	NA	NA	NA	NA
Interoffice Channel - Dedicated - DS1 - per mile per month	1L5XX	NA	$0.6013	$0.4523	NA	$0.7831	NA	$0.0783	NA	$0.3525
Interoffice Channel - Dedicated - DS1 - Facility Termination per month	U1TF1	NA	$99.79	$78.47	NA	$93.40	NA	$71.29	NA	$75.83
DS1 Channelized System per month	MQ1	NA	$153.60	$18.23	NA	$209.87	NA	$177.72	NA	$165.21
VG (COCI) interface card per month	1D1VG	NA	$1.45	$2.67	NA	$1.62	NA	$1.64	NA	$1.25
Non-Recurring Charges - New EEL (Note 2) (Note 3)										
NRC- DS1 interoffice Facility Termination - 1st	U1TF1	NA	$171.01	$142.64	NA	$160.49	NA	$534.48	NA	$165.53
NRC-DS1 interoffice Facility Termination - Add'l	U1TF1	NA	$101.84	$94.87	NA	$123.03	NA	$462.69	NA	$124.84
NRC-4-wire VG Local Loop - 1st	UEAL4	NA	$329.76	$228.99	NA	$128.42	NA	$288.47	NA	$103.76
NRC-4-wire VG Local Loop - Add'l	UEAL4	NA	$178.91	$203.26	NA	$93.60	NA	$237.45	NA	$65.84
NRC-DS1 Channelization System -1st	MQ1	NA	$275.18	$206.09	NA	$220.07	NA	$301.74	NA	$222.87
NRC-DS1 Channelization System - Add'l	MQ1	NA	$137.77	$137.06	NA	$135.20	NA	$182.57	NA	$135.80
NRC-VG(COCI)interface card -1st	1D1VG	NA	$12.16	$12.02	NA	$12.29	NA	$15.76	NA	$12.61
NRC-VG(COCI)interface card - Add'	1D1VG	NA	$8.77	$8.66	NA	$8.80	NA	$11.28	NA	$9.03
NRC-DS1 interoffice channel and 4-wire VG Local Loop Combination - Electronic Sv	SOMEC	NA	$3.17	$3.50	NA	$3.50	NA	$3.50	NA	$3.50
NRC-DS1 interoffice channel and 4-wire VG Local Loop Combination - Manual Svc (	SOMAN	NA	$25.40	NA	NA	NA	NA	NA	NA	$19.99
NRC-DS1 interoffice channel and 4-wire VG Local Loop Combination - Manual Svc (	SOMAN	NA	NA	$33.63	NA	$242.20	NA	$66.20	NA	NA
NRC-DS1 interoffice channel and 4-wire VG Local Loop Combination - Manual Svc (	SOMAN	NA	NA	$27.49	NA	$153.37	NA	$51.40	NA	NA
NRC-DS1 interoffice channel and 4-wire VG Local Loop Combination - Manual Svc (	SOMAN	NA	NA	$19.88	NA	$45.91	NA	NA	NA	NA
NRC-DS1 interoffice channel and 4-wire VG Local Loop Combination - Manual Svc (	SOMAN	NA	NA	$11.85	NA	$8.06	NA	NA	NA	NA

		New EEL rates are the sum of the individual UNE network elements (interoffice transport and loop [channelization if applicable].										
		DS1 Interoffice Channel and 2-wire ISDN Local Loop:										
		Recurring Charges										
		2-wire ISDN Loop per month	U1L2X	NA	NA	NA	NA	NA	NA	$24.98	NA	NA
		2-wire ISDN Loop per month, Zone 1 (Note 1)	U1L2X	NA	$32.34	$21.89	NA	$21.15	NA	TBD	NA	$15.54
		2-wire ISDN Loop per month, Zone 2 (Note 1)	U1L2X	NA	$47.35	$25.27	NA	$36.22	NA	TBD	NA	$19.55
		2-wire ISDN Loop per month, Zone 3 (Note 1)	U1L2X	NA	$104.47	$40.17	NA	$74.19	NA	TBD	NA	$28.02
		2-wire ISDN Loop per month, Zone 4 (Note 1)	NA	NA	NA	NA	NA	NA	NA	NA	NA	NA
		Interoffice Channel - Dedicated - DS1 - per mile per month	1L5XX	NA	$0.6013	$0.4523	NA	$0.7831	NA	$0.5753	NA	$0.3525
		Interoffice Channel - Dedicated - DS1 - Facility Termination per month	U1TF1	NA	$99.79	$78.47	NA	$93.40	NA	$71.29	NA	$75.83
		DS1 Channelized System per month	MQ1	NA	$153.60	$18.23	NA	$209.87	NA	$177.72	NA	$165.21
		2-wire ISDN(BRITE COCI) per month	UC1CA	NA	$3.83	$3.71	NA	$4.18	NA	$3.76	NA	$3.33
		Non-Recurring Charges - New EEL (Note 2)(Note 3)										
		NRC- DS1 interoffice Facility Termination - 1st	U1TF1	NA	$171.01	$142.64	NA	$160.49	NA	$217.17	NA	$165.53
		NRC-DS1 interoffice Facility Termination - Add'l	U1TF1	NA	$101.84	$94.87	NA	$123.03	NA	$163.75	NA	$124.84
		NRC- 2-wire ISDN Local Loop - 1st	U1L2X	NA	$329.76	$77.54	NA	$223.27	NA	$325.91	NA	$58.50
		NRC- 2-wire ISDN Local Loop - Add'l	U1L2X	NA	$148.55	$51.57	NA	$172.63	NA	$251.31	NA	$31.00
		NRC-DS1 Channelization System -1st	MQ1	NA	$275.18	$206.09	NA	$220.07	NA	$301.74	NA	$222.87
		NRC-DS1 Channelization System - Add'l	MQ1	NA	$137.77	$137.06	NA	$135.20	NA	$182.57	NA	$135.80
		NRC-2-wire BRITE(COCI)interface card -1st	UC1CA	NA	$12.16	$12.02	NA	$12.29	NA	$15.76	NA	$12.61
		NRC-2-wire BRITE(COCI)interface card -Add'l	UC1CA	NA	$8.77	$8.66	NA	$8.80	NA	$11.28	NA	$9.03
		NRC-DS1 interoffice channel and 2-wire ISDN Local Loop Combination - Electronic S	SOMEC	NA	$3.17	$3.50	NA	$3.50	NA	$3.50	NA	$3.50
		NRC-DS1 interoffice channel and 2-wire ISDN Local Loop Combination - Manual Sv	SOMAN	NA	$25.40	NA	NA	NA	NA	NA	NA	$19.99
		NRC-DS1 interoffice channel and 2-wire ISDN Local Loop Combination - Manual Sv	SOMAN	NA	NA	$33.63	NA	$57.58	NA	$38.07	NA	NA
		NRC-DS1 interoffice channel and 2-wire ISDN Local Loop Combination - Manual Sv	SOMAN	NA	NA	$27.49	NA	$36.31	NA	$38.07	NA	NA
		NRC-DS1 interoffice channel and 2-wire ISDN Local Loop Combination - Manual Sv	SOMAN	NA	NA	$19.88	NA	$16.12	NA	NA	NA	NA
		NRC-DS1 interoffice channel and 2-wire ISDN Local Loop Combination - Manual Sv	SOMAN	NA	NA	$11.85	NA	$8.06	NA	NA	NA	NA
		DS1 Interoffice Channel and 4-wire 56 kbps Local Loop:										
		Recurring Charges										
		4-wire 56kbps Loop per month	UDL56	NA	NA	NA	NA	NA	NA	$32.67	NA	NA
		4-wire 56kbps Loop per month, Zone 1 (Note 1)	UDL56	NA	$39.08	$26.44	NA	$27.50	NA	TBD	NA	$36.45
		4-wire 56kbps Loop per month, Zone 2 (Note 1)	UDL56	NA	$57.21	$26.42	NA	$47.24	NA	TBD	NA	$45.87
		4-wire 56kbps Loop per month, Zone 3 (Note 1)	UDL56	NA	$126.22	$46.53	NA	$96.48	NA	TBD	NA	$65.75
		4-wire 56kbps Loop per month, Zone 4 (Note 1)	NA	NA	NA	NA	NA	NA	NA	NA	NA	NA
		Interoffice Channel - Dedicated - DS1 - per mile per month	1L5XX	NA	$0.6013	$0.4523	NA	$0.7831	NA	$0.5753	NA	$0.3525
		Interoffice Channel - Dedicated - DS1 - Facility Termination per month	U1TF1	NA	$99.79	$78.47	NA	$93.40	NA	$71.29	NA	$75.83
		DS1 Channelized System per month	MQ1	NA	$153.60	$18.23	NA	$209.87	NA	$177.72	NA	$165.21
		4-wire 56kbps card COCI per month	1D1DD	NA	$2.20	$1.06	NA	$3.12	NA	$2.88	NA	$2.46
		Non-Recurring Charges - New EEL (Note 2) (Note 3)										
		NRC- DS1 interoffice Facility Termination - 1st	U1TF1	NA	$171.01	$142.64	NA	$160.49	NA	$217.17	NA	$165.53
		NRC-DS1 interoffice Facility Termination - Add'l	U1TF1	NA	$101.84	$94.87	NA	$123.03	NA	$163.75	NA	$124.84
		NRC-4-wire 56kbps Local Loop - 1st	UDL56	NA	$329.76	$395.14	NA	$333.28	NA	$489.04	NA	$643.00
		NRC-4-wire 56kbps Local Loop - Add'l	UDL56	NA	$148.55	$206.98	NA	$230.50	NA	$337.51	NA	$421.26
		NRC-DS1 Channelization System -1st	MQ1	NA	$275.18	$206.09	NA	$220.07	NA	$301.74	NA	$222.87
		NRC-DS1 Channelization System - Add'l	MQ1	NA	$137.77	$137.06	NA	$135.20	NA	$182.57	NA	$135.80
		NRC-4-wire 56kbps(COCI)interface card -1st	1D1DD	NA	$12.16	$12.02	NA	$12.29	NA	$15.76	NA	$12.61
		NRC-4-wire 56kbps(COCI)interface card -Add'l	1D1DD	NA	$8.77	$8.66	NA	$8.80	NA	$11.28	NA	$9.03
		NRC-DS1 interoffice channel and 4-wire 56kbps Local Loop Combination - Electroni	SOMEC	NA	$3.17	$3.50	NA	$3.50	NA	$3.50	NA	$3.50
		NRC-DS1 interoffice channel and 4-wire 56kbps Local Loop Combination - Manual S	SOMAN	NA	$25.40	NA	NA	NA	NA	NA	NA	$19.99
		NRC-DS1 interoffice channel and 4-wire 56kbps Local Loop Combination - Manual S	SOMAN	NA	NA	$33.63	NA	$242.20	NA	$65.01	NA	NA
		NRC-DS1 interoffice channel and 4-wire 56kbps Local Loop Combination - Manual S	SOMAN	NA	NA	$27.49	NA	$153.37	NA	$50.83	NA	NA
		NRC-DS1 interoffice channel and 4-wire 56kbps Local Loop Combination - Manual S	SOMAN	NA	NA	$19.88	NA	$45.91	NA	NA	NA	NA
		NRC-DS1 interoffice channel and 4-wire 56kbps Local Loop Combination - Manual S	SOMAN	NA	NA	$11.85	NA	$8.06	NA	NA	NA	NA

		New EEL rates are the sum of the individual UNE network elements (interoffice transport and loop [channelization if applicable].										
		DS1 Interoffice Channel and 4-wire 64 kbps Local Loop:										
		Recurring Charges										
		4-wire 64kbps Loop per month	UDL64	NA	NA	NA	NA	NA	NA	$32.67	NA	NA
		4-wire 64kbps Loop per month, Zone 1 (Note 1)	UDL64	NA	$39.08	$26.44	NA	$27.50	NA	TBD	NA	$36.45
		4-wire 64kbps Loop per month, Zone 2 (Note 1)	UDL64	NA	$57.21	$30.53	NA	$47.24	NA	TBD	NA	$45.87
		4-wire 64kbps Loop per month, Zone 3 (Note 1)	UDL64	NA	$126.22	$46.53	NA	$96.48	NA	TBD	NA	$65.75
		4-wire 64kbps Loop per month, Zone 4 (Note 1)	NA	NA	NA	NA	NA	NA	NA	NA	NA	NA
		Interoffice Channel - Dedicated - DS1 - per mile per month	1L5XX	NA	$0.6013	$0.4523	NA	$0.7831	NA	$0.5753	NA	$0.3525
		Interoffice Channel - Dedicated - DS1 - Facility Termination per month	U1TF1	NA	$99.79	$78.47	NA	$93.40	NA	$71.29	NA	$75.83
		DS1 Channelized System per month	MQ1	NA	$153.60	$18.23	NA	$209.87	NA	$177.72	NA	$165.21
		4-wire 64kbps card COCI per month	1D1DD	NA	$1.06	$1.06	NA	$3.12	NA	$2.88	NA	$2.46
		Non-Recurring Charges - New EEL (Note 2) (Note 3)										
		NRC- DS1 interoffice - 1st	U1TF1	NA	$171.01	$142.64	NA	$160.49	NA	$217.17	NA	$165.53
		NRC- DS1 interoffice - Add'l	U1TF1	NA	$101.84	$94.87	NA	$123.03	NA	$163.75	NA	$124.84
		NRC-4-wire 64kbps Local Loop - 1st	UDL64	NA	$329.76	$395.14	NA	$333.28	NA	$489.04	NA	$103.76
		NRC-4-wire 64kbps Local Loop - Add'l	UDL64	NA	$148.55	$206.98	NA	$230.50	NA	$337.51	NA	$65.84
		NRC-DS1 Channelization System -1st	MQ1	NA	$275.18	$206.09	NA	$220.07	NA	$301.74	NA	$222.87
		NRC-DS1 Channelization System - Add'l	MQ1	NA	$137.77	$137.06	NA	$135.20	NA	$288.33	NA	$135.80
		NRC-4-wire 64kbps(COCI)interface card -1st	1D1DD	NA	$12.16	$12.02	NA	$12.29	NA	$15.76	NA	$12.61
		NRC-4-wire 64kbps(COCI)interface card -Add'l	1D1DD	NA	$8.77	$8.66	NA	$8.80	NA	$11.28	NA	$9.03
		NRC-DS1 interoffice channel and 4-wire 64kbps Local Loop Combination - Electroni	SOMEC	NA	$3.17	$3.50	NA	$3.50	NA	$3.50	NA	$3.50
		NRC-DS1 interoffice channel and 4-wire 64kbps Local Loop Combination - Manual S	SOMAN	NA	$25.40	NA	NA	NA	NA	NA	NA	$19.99
		NRC-DS1 interoffice channel and 4-wire 64kbps Local Loop Combination - Manual S	SOMAN	NA	NA	$33.63	NA	$242.20	NA	$65.01	NA	NA
		NRC-DS1 interoffice channel and 4-wire 64kbps Local Loop Combination - Manual S	SOMAN	NA	NA	$27.49	NA	$153.37	NA	$50.83	NA	NA
		NRC-DS1 interoffice channel and 4-wire 64kbps Local Loop Combination - Manual S	SOMAN	NA	NA	$19.88	NA	$45.91	NA	NA	NA	NA
		NRC-DS1 interoffice channel and 4-wire 64kbps Local Loop Combination - Manual S	SOMAN	NA	NA	$11.85	NA	$8.06	NA	NA	NA	NA
		DS1 Interoffice Channel and DS1 Interoffice Local Loop:										
		Recurring Charges										
		DS1 Loop per month	USLXX	NA	NA	NA	NA	NA	NA	$62.78	NA	NA
		DS1 Loop per month, Zone 1 (Note 1)	USLXX	NA	$64.69	$52.40	NA	$56.32	NA	TBD	NA	NA
		DS1 Loop per month, Zone 2 (Note 1)	USLXX	NA	$94.71	$60.51	NA	$96.73	NA	TBD	NA	NA
		DS1 Loop per month, Zone 3 (Note 1)	USLXX	NA	$208.93	$96.18	NA	$197.57	NA	TBD	NA	NA
		DS1 Loop per month, Zone 4 (Note 1)	NA	NA	NA	NA	NA	NA	NA	NA	NA	NA
		Interoffice Channel - Dedicated - DS1 - per mile per month	1L5XX	NA	$0.6013	$0.4523	NA	$0.7831	NA	$0.5753	NA	NA
		Interoffice Channel - Dedicated - DS1 - Facility Termination per month	U1TF1	NA	$99.79	$78.47	NA	$93.40	NA	$71.29	NA	NA
		Non-Recurring Charges - New EEL (Note 2) (Note 3)										
		NRC- DS1 interoffice - 1st	U1TF1	NA	$171.01	$142.64	NA	$160.49	NA	$217.17	NA	NA
		NRC- DS1 interoffice - Add'l	U1TF1	NA	$101.84	$94.87	NA	$123.03	NA	$163.75	NA	NA
		NRC-DS1 Local Loop - 1st	USLXX	NA	$627.78	$627.44	NA	$502.73	NA	$714.84	NA	NA
		NRC-DS1 Local Loop - Add'l	USLXX	NA	$377.43	$231.49	NA	$293.92	NA	$421.47	NA	NA
		NRC-DS1 interoffice channel and DS1 Local Loop Combination - Electronic Svc Ord	SOMEC	NA	$3.17	$3.50	NA	$3.50	NA	$3.50	NA	$3.50
		NRC-DS1 interoffice channel and DS1 Local Loop Combination - Manual Svc Order,	SOMAN	NA	$25.40	NA	NA	NA	NA	NA	NA	$19.99
		NRC-DS1 interoffice channel and DS1 Local Loop Combination - Manual Svc Order	SOMAN	NA	NA	$33.63	NA	$242.20	NA	$65.01	NA	NA
		NRC-DS1 interoffice channel and DS1 Local Loop Combination - Manual Svc Order	SOMAN	NA	NA	$27.49	NA	$153.37	NA	$50.83	NA	NA
		NRC-DS1 interoffice channel and DS1 Local Loop Combination - Manual Svc Order	SOMAN	NA	NA	$19.88	NA	$45.91	NA	NA	NA	NA
		NRC-DS1 interoffice channel and DS1 Local Loop Combination - Manual Svc Order	SOMAN	NA	NA	$11.85	NA	$8.06	NA	NA	NA	NA
		DS3 Interoffice Channel and DS3 Local Loop:										
		Recurring Charges										
		DS3 Loop per Facility Termination per month	UE3PX	NA	$404.58	$390.34	NA	$669.01	NA	$387.01	NA	$607.28
		DS3 Loop per mile	1L5ND	NA	$11.77	$8.90	NA	$30.34	NA	$32.53	NA	$23.76
		Interoffice Channel - Dedicated - DS3 - FacilityTermination per month	U1TF3	NA	$1,121.93	$717.60	NA	$1,101	NA	$720.38	NA	$760.20
		Interoffice Channel - Dedicated - DS3 - per mile per month	1L5XX	NA	$4.17	$6.46	NA	$14.04	NA	$12.98	NA	$5.89
		Non-Recurring Charges - New EEL (Note 2)(Note 3)										

		New EEL rates are the sum of the individual UNE network elements (interoffice transport and loop [channelization if applicable].										
		NRC- DS3 interoffice - 1st	U1TF3	NA	$154.30	$633.41	NA	$713.57	NA	$794.94	NA	$729.27
		NRC- DS3 interoffice - Add'l	U1TF3	NA	$77.50	$449.91	NA	$404.36	NA	$579.55	NA	$411.98
		NRC-DS3 Local Loop - 1st	UE3PX	NA	$1,020.45	$761.81	NA	$811.30	NA	$964.04	NA	$829.52

		New EEL rates are the sum of the individual UNE network elements (interoffice transport and loop [channelization if applicable].										
		NRC-DS3 Local Loop - Add'l	UE3PX	NA	$513.74	$545.54	NA	$502.09	NA	$542.73	NA	$512.23
		NRC-DS3 interoffice channel and DS3 Local Loop Combination - Electronic Svc Ord	SOMEC	NA	$3.17	$3.50	NA	$3.50	NA	$3.50	NA	$3.50
		NRC-DS3 interoffice channel and DS3 Local Loop Combination - Manual Svc Order	SOMAN	NA	$25.40	NA	NA	NA	NA	NA	NA	$19.99
		NRC-DS3 interoffice channel and DS3 Local Loop Combination - Manual Svc Order	SOMAN	NA	NA	$37.55	NA	$100.50	NA	$83.19	NA	NA
		NRC-DS3 interoffice channel and DS3 Local Loop Combination - Manual Svc Order	SOMAN	NA	NA	$37.55	NA	$100.50	NA	$69.01	NA	NA
		NRC-DS3 interoffice channel and DS3 Local Loop Combination - Manual Svc Order	SOMAN	NA	NA	$18.03	NA	$41.88	NA	NA	NA	NA
		NRC-DS3 interoffice channel and DS3 Local Loop Combination - Manual Svc Order	SOMAN	NA	NA	$18.03	NA	$41.88	NA	NA	NA	NA
		STS-1 Interoffice Channel and STS-1 Local Loop:										
		Recurring Charges										
		STS-1 Loop per Facility Termination per month	UDLS1	NA	$446.09	$421.59	NA	$497.08	NA	$387.01	NA	$400.21
		STS-1 Loop per mile	1L5ND	NA	$11.77	$8.90	NA	$38.98	NA	$32.53	NA	$30.53
		Interoffice Channel - Dedicated - STS-1 - FacilityTermination per month	U1TFS	NA	$1,105.98	$788.00	NA	$1,101	NA	$800.94	NA	$838.65
		Interoffice Channel - Dedicated - STS-1 - per mile per month	1L5XX	NA	$4.17	$2.72	NA	$14.04	NA	$6.29	NA	$6.88
		Non-Recurring Charges - New EEL (Note 2)(Note 3)										
		NRC- STS-1 interoffice - 1st	U1TFS	NA	$154.30	$633.41	NA	$713.57	NA	$624.86	NA	$961.62
		NRC- STS-1 interoffice - Add'l	U1TFS	NA	$77.50	$449.91	NA	$404.36	NA	$436.36	NA	$625.84
		NRC-STS-1 Local Loop - 1st	UDLS1	NA	$1,020.45	$761.81	NA	$811.30	NA	$964.04	NA	$829.52
		NRC-STS-1 Local Loop - Add'l	UDLS1	NA	$513.74	$545.54	NA	$502.09	NA	$542.73	NA	$512.23
		NRC-STS-1 interoffice channel and STS-1 Local Loop Combination - Electronic Svc	SOMEC	NA	$3.17	$3.50	NA	$3.50	NA	$3.50	NA	$3.50
		NRC-STS-1 interoffice channel and STS-1 Local Loop Combination - Manual Svc Or	SOMAN	NA	$25.40	NA	NA	NA	NA	NA	NA	$19.99
		NRC-STS-1 interoffice channel and STS-1 Local Loop Combination - Manual Svc Or	SOMAN	NA	NA	$37.96	NA	$100.50	NA	$123.62	NA	NA
		NRC-STS-1 interoffice channel and STS-1 Local Loop Combination - Manual Svc Or	SOMAN	NA	NA	$37.96	NA	$100.50	NA	$84.76	NA	NA
		NRC-STS-1 interoffice channel and STS-1 Local Loop Combination - Manual Svc Or	SOMAN	NA	NA	$18.23	NA	$41.88	NA	NA	NA	NA
		NRC-STS-1 interoffice channel and STS-1 Local Loop Combination - Manual Svc Or	SOMAN	NA	NA	$18.23	NA	$41.88	NA	NA	NA	NA
		DS3 Interoffice Channel and DS1 Local Loop:										
		Recurring Charges										
		DS1 Loop per month	USLXX	NA	NA	NA	NA	NA	NA	$62.78	NA	NA

New EEL rates are the sum of the individual UNE network elements (interoffice transport and loop [channelization if applicable].											
DS1 Loop per month, Zone 1 (Note 1)	USLXX	NA	$64.69	$52.40	NA	$56.32	NA	TBD	NA	NA
DS1 Loop per month, Zone 2 (Note 1)	USLXX	NA	$94.71	$60.51	NA	$96.73	NA	TBD	NA	NA
DS1 Loop per month, Zone 3 (Note 1)	USLXX	NA	$208.93	$96.18	NA	$197.57	NA	TBD	NA	NA
DS1 Loop per month, Zone 4 (Note 1)	NA	NA	NA	NA	NA	NA	NA	NA	NA	NA
Interoffice Channel - Dedicated - DS3 - FacilityTermination per month	U1TF3	NA	$1,121.93	$717.60	NA	$1,101	NA	$720.38	NA	NA
Interoffice Channel - Dedicated - DS3 - per mile per month	1L5XX	NA	$4.17	$6.46	NA	$14.04	NA	$12.98	NA	NA
DS3 Channelized System per month	MQ3	NA	$220.97	$202.91	NA	$245.84	NA	$226.81	NA	NA
DS3 Interface per month (DS1 COCI)	UC1D1	NA	$14.40	$0.67	NA	$7.55	NA	$4.61	NA	NA
Non-Recurring Charges - New EEL (Note 2)(Note 3)										
NRC- DS3 interoffice - 1st	U1TF3	NA	$627.78	$520.09	NA	$713.57	NA	$794.94	NA	NA
NRC- DS3 interoffice - Add'l	U1TF3	NA	$377.43	$282.38	NA	$404.36	NA	$579.55	NA	NA
NRC-DS1 Local Loop - 1st	USLXX	NA	$338.52	$142.64	NA	$502.73	NA	$714.84	NA	NA
NRC-DS1 Local Loop - Add'l	USLXX	NA	$124.84	$94.87	NA	$293.92	NA	$421.47	NA	NA
NRC-DS3 Channelization System -1st	MQ3	NA	$404.85	$316.28	NA	$320.72	NA	$351.95	NA	NA
NRC-DS3 Channelization System - Add'l	MQ3	NA	$168.26	$171.72	NA	$233.10	NA	$243.76	NA	NA
NRC-DS1(COCI)interface card -1st	UC1D1	NA	$12.16	$12.02	NA	$12.29	NA	$15.76	NA	NA
NRC-DS1(COCI)interface card -Add'l	UC1D1	NA	$8.77	$8.66	NA	$8.80	NA	$11.28	NA	NA
NRC-DS3 interoffice channel and DS1 Local Loop Combination - Electronic Svc Ord	SOMEC	NA	$3.17	$3.50	NA	$3.50	NA	$3.50	NA	NA
NRC-DS3 interoffice channel and DS1 Local Loop Combination - Manual Svc Order,	SOMAN	NA	$25.40	$33.63	NA	NA	NA	NA	NA	NA
NRC-DS3 interoffice channel and DS1 Local Loop Combination - Manual Svc Order	SOMAN	NA	NA	NA	NA	$36.28	NA	$118.20	NA	NA
NRC-DS3 interoffice channel and DS1 Local Loop Combination - Manual Svc Order	SOMAN	NA	NA	$27.49	NA	$26.20	NA	$104.02	NA	NA
NRC-DS3 interoffice channel and DS1 Local Loop Combination - Manual Svc Order	SOMAN	NA	NA	$19.88	NA	$19.47	NA	NA	NA	NA
NRC-DS3 interoffice channel and DS1 Local Loop Combination - Manual Svc Order	SOMAN	NA	NA	$11.85	NA	$8.06	NA	NA	NA	NA
STS-1 Interoffice Channel and DS1 Local Loop:										
Recurring Charges										
DS1 Loop per month, Zone 1 (Note 1)	USLXX	NA	$64.69	$52.40	NA	$56.32	NA	TBD	NA	NA
DS1 Loop per month, Zone 2 (Note 1)	USLXX	NA	$94.71	$60.51	NA	$96.73	NA	TBD	NA	NA
DS1 Loop per month, Zone 3 (Note 1)	USLXX	NA	$208.93	$96.18	NA	$197.57	NA	TBD	NA	NA
DS1 Loop per month, Zone 4 (Note 1)	NA	NA	NA	NA	NA	NA	NA	NA	NA	NA
Interoffice Channel - Dedicated - STS-1 - FacilityTermination per month	U1TFS	NA	$1,105.98	$717.60	NA	$1,101	NA	$387.01	NA	NA
Interoffice Channel - Dedicated - STS-1 - per mile per month	1L5XX	NA	$4.17	$6.46	NA	$14.04	NA	$32.53	NA	NA
DS3 Channelized System per month	MQ3	NA	$220.97	$202.91	NA	$245.84	NA	$226.81	NA	NA
DS3 Interface per month (DS1 COCI)	UC1D1	NA	$14.40	$0.67	NA	$7.55	NA	$4.61	NA	NA
Non-Recurring Charges - New EEL (Note 2)(Note 3)										
NRC-DS1 Local Loop - 1st	USLXX	NA	$627.78	$520.09	NA	$502.73	NA	$714.84	NA	NA
NRC-DS1 Local Loop - Add'l	USLXX	NA	$377.43	$282.38	NA	$293.92	NA	$421.47	NA	NA
NRC- STS-1 interoffice - 1st	U1TFS	NA	$154.30	$142.64	NA	$713.57	NA	$624.86	NA	NA
NRC- STS-1 interoffice - Add'l	U1TFS	NA	$77.50	$94.87	NA	$404.36	NA	$436.36	NA	NA
NRC-DS3 Channelization System -1st	MQ3	NA	$404.85	$316.28	NA	$320.72	NA	$351.95	NA	NA
NRC-DS3 Channelization System - Add'l	MQ3	NA	$168.26	$171.72	NA	$233.10	NA	$243.76	NA	NA
NRC-DS1(COCI)interface card -1st	UC1D1	NA	$12.16	$12.02	NA	$12.29	NA	$15.76	NA	NA
NRC-DS1(COCI)interface card -Add'l	UC1D1	NA	$8.77	$8.66	NA	$8.80	NA	$11.28	NA	NA
NRC-STS-1 interoffice channel and DS1 Local Loop Combination - Electronic Svc O	SOMEC	NA	$3.17	$3.50	NA	$3.50	NA	$3.50	NA	NA
NRC-STS-1 interoffice channel and DS1 Local Loop Combination - Manual Svc Orde	SOMAN	NA	$25.40	NA	NA	NA	NA	NA	NA	NA
NRC-STS-1 interoffice channel and DS1 Local Loop Combination - Manual Svc Orde	SOMAN	NA	NA	$33.63	NA	$68.39	NA	$81.94	NA	NA
NRC-STS-1 interoffice channel and DS1 Local Loop Combination - Manual Svc Orde	SOMAN	NA	NA	$27.49	NA	$58.31	NA	$67.76	NA	NA
NRC-STS-1 interoffice channel and DS1 Local Loop Combination - Manual Svc Orde	SOMAN	NA	NA	$19.88	NA	$50.49	NA	NA	NA	NA
NRC-STS-1 interoffice channel and DS1 Local Loop Combination - Manual Svc Orde	SOMAN	NA	NA	$11.85	NA	$29.00	NA	NA	NA	NA
2-wire VG Interoffice Channel and 2-wire VG Local Loop:										
Recurring Charges										
2-wire VG Loop per month, statewide	UEAL2	NA	$20.52	$16.51	NA	$19.35	NA	NA	NA	$18.00
2-wire VG Loop per month, Zone 1 (Note 1)	UEAL2	NA	TBD	$15.40	NA	$17.65	NA	NA	NA	$15.54
2-wire VG Loop per month, Zone 2 (Note 1)	UEAL2	NA	TBD	$17.78	NA	$30.32	NA	NA	NA	$19.55

		New EEL rates are the sum of the individual UNE network elements (interoffice transport and loop [channelization if applicable].										
		2-wire VG Loop per month, Zone 3 (Note 1)	UEAL2	NA	TBD	$28.26	NA	$61.93	NA	NA	NA	$28.02
		2-wire VG Loop per month, Zone 4 (Note 1)	NA	NA	NA	NA	NA	NA	NA	NA	NA	NA
		Interoffice Channel - Dedicated - 2-wire VG - FacilityTermination per month	U1TV2	NA	$26.52	$17.07	NA	$19.10	NA	NA	NA	$18.33
		Interoffice Channel - Dedicated - 2-wire VG - per mile per month	1L5XX	NA	$0.01	$0.0222	NA	$0.0384	NA	NA	NA	$0.0173
		Non-Recurring Charges - New EEL (Note 2)(Note 3)										
		NRC- 2-wire VG interoffice - 1st	U1TV2	NA	$112.10	$79.61	NA	$104.23	NA	NA	NA	$83.35
		NRC- 2-wire VG interoffice - Add'l	U1TV2	NA	$67.61	$36.08	NA	$39.91	NA	NA	NA	$20.88
		NRC-2-wire VG Local Loop - 1st	UEAL2	NA	$38.02	$104.17	NA	$128.42	NA	NA	NA	$192.97
		NRC-2-wire VG Local Loop - Add'l	UEAL2	NA	$35.15	$78.10	NA	$93.60	NA	NA	NA	$140.72
		NRC-2-wire VG interoffice channel and 2-wire VG Local Loop Combination - Electron	SOMEC	NA	$3.17	$3.50	NA	$3.50	NA	NA	NA	$3.50
		NRC-2-wire VG interoffice channel and 2-wire VG Local Loop Combination - Manual	SOMAN	NA	$25.40	NA	NA	NA	NA	NA	NA	$19.99
		NRC-2-wire VG interoffice channel and 2-wire VG Local Loop Combination - Manual	SOMAN	NA	NA	$37.88	NA	$36.28	NA	NA	NA	NA
		NRC-2-wire VG interoffice channel and 2-wire VG Local Loop Combination - Manual	SOMAN	NA	NA	$27.36	NA	$26.20	NA	NA	NA	NA
		NRC-2-wire VG interoffice channel and 2-wire VG Local Loop Combination - Manual	SOMAN	NA	NA	NA	NA	$19.47	NA	NA	NA	NA
		NRC-2-wire VG interoffice channel and 2-wire VG Local Loop Combination - Manual	SOMAN	NA	NA	NA	NA	$8.06	NA	NA	NA	NA
		4-wire VG Interoffice Channel and 4-wire VG Local Loop:										
		Recurring Charges										
		4-wire VG Loop per month, Zone 1 (Note 1)	UEAL4	NA	$24.26	NA	NA	NA	NA	NA	NA	NA
		4-wire VG Loop per month, Zone 2 (Note 1)	UEAL4	NA	$35.51	NA	NA	NA	NA	NA	NA	NA
		4-wire VG Loop per month, Zone 3 (Note 1)	UEAL4	NA	$78.35	NA	NA	NA	NA	NA	NA	NA
		4-wire VG Loop per month, Zone 4 (Note 1)	NA	NA	NA	NA	NA	NA	NA	NA	NA	NA
		Interoffice Channel - Dedicated - 4-wire VG - FacilityTermination per month	U1TV4	NA	$23.64	NA	NA	NA	NA	NA	NA	NA
		Interoffice Channel - Dedicated - 4-wire VG - per mile per month	1L5XX	NA	$0.0098	NA	NA	NA	NA	NA	NA	NA
		Non-Recurring Charges - New EEL (Note 2)(Note 3)										
		NRC- 4-wire VG interoffice - 1st	U1TV4	NA	$160.33	NA	NA	NA	NA	NA	NA	NA
		NRC- 4-wire VG interoffice - Add'l	U1TV4	NA	$73.44	NA	NA	NA	NA	NA	NA	NA
		NRC-4-wire VG Local Loop - 1st	UEAL4	NA	$329.76	NA	NA	NA	NA	NA	NA	NA
		NRC-4-wire VG Local Loop - Add'l	UEAL4	NA	$148.55	NA	NA	NA	NA	NA	NA	NA
		NRC-4-wire VG interoffice channel and 4-wire VG Local Loop Combination - Electron	SOMEC	NA	$3.17	NA	NA	NA	NA	NA	NA	NA
		NRC-4-wire VG interoffice channel and 4-wire VG Local Loop Combination - Manual	SOMAN	NA	$25.40	NA	NA	NA	NA	NA	NA	NA
		NRC-4-wire VG interoffice channel and 4-wire VG Local Loop Combination - Manual	SOMAN	NA	NA	NA	NA	NA	NA	NA	NA	NA
		NRC-4-wire VG interoffice channel and 4-wire VG Local Loop Combination - Manual	SOMAN	NA	NA	NA	NA	NA	NA	NA	NA	NA
		NRC-4-wire VG interoffice channel and 4-wire VG Local Loop Combination - Manual	SOMAN	NA	NA	NA	NA	NA	NA	NA	NA	NA
		NRC-4-wire VG interoffice channel and 4-wire VG Local Loop Combination - Manual	SOMAN	NA	NA	NA	NA	NA	NA	NA	NA	NA
		4-wire 56 kbps Interoffice Channel and 4-wire 56kbps Local Loop:										
		Recurring Charges										
		4-wire 56kbps Loop per month, Zone 1 (Note 1)	UDL56	NA	$39.08	$26.44	NA	$24.36	NA	TBD	NA	$15.92
		4-wire 56kbps Loop per month, Zone 2 (Note 1)	UDL56	NA	$57.21	$26.42	NA	$41.85	NA	TBD	NA	$20.79
		4-wire 56kbps Loop per month, Zone 3 (Note 1)	UDL56	NA	$126.22	$46.53	NA	$86.47	NA	TBD	NA	$27.18
		4-wire 56kbps Loop per month, Zone 4 (Note 1)	NA	NA	NA	NA	NA	NA	NA	NA	NA	NA
		Interoffice Channel - Dedicated - 4-wire 56kbps - FacilityTermination per month	U1TD5	NA	$23.64	$16.45	NA	$18.37	NA	$17.40	NA	$17.74
		Interoffice Channel - Dedicated - 4-wire 56kbps - per mile per month	1L5XX	NA	$0.0098	$0.0222	NA	$0.0384	NA	$0.0282	NA	$0.1730
		Non-Recurring Charges - New EEL (Note 2)(Note 3)										
		NRC- 4-wire 56kbps interoffice - 1st	U1TD5	NA	$160.33	$79.61	NA	$104.23	NA	$137.48	NA	$83.35
		NRC- 4-wire 56kbps interoffice - Add'l	U1TD5	NA	$73.44	$36.08	NA	$39.91	NA	$52.58	NA	$20.88
		NRC-4-wire 56kbps Local Loop - 1st	UDL56	NA	$329.76	$348.55	NA	$421.27	NA	$489.04	NA	$643.00
		NRC-4-wire 56kbps Local Loop - Add'l	UDL56	NA	$148.55	$241.20	NA	$274.74	NA	$337.51	NA	$421.28
		NRC-4-wire 56kbps interoffice channel and 4-wire 56kbps Local Loop Combination -	SOMEC	NA	$3.17	$3.50	NA	$3.50	NA	$3.50	NA	$3.50
		NRC-4-wire 56kbps interoffice channel and 4-wire 56kbps Local Loop Combination -	SOMAN	NA	$25.40	NA	NA	NA	NA	NA	NA	$19.99
		NRC-4-wire 56kbps interoffice channel and 4-wire 56kbps Local Loop Combination -	SOMAN	NA	NA	$37.88	NA	$36.28	NA	$65.01	NA	NA
		NRC-4-wire 56kbps interoffice channel and 4-wire 56kbps Local Loop Combination -	SOMAN	NA	NA	$27.36	NA	$26.20	NA	$50.83	NA	NA
		NRC-4-wire 56kbps interoffice channel and 4-wire 56kbps Local Loop Combination -	SOMAN	NA	NA	NA	NA	$11.41	NA	NA	NA	NA
		NRC-4-wire 56kbps interoffice channel and 4-wire 56kbps Local Loop Combination -	SOMAN	NA	NA	NA	NA	NA	NA	NA	NA	NA

New EEL rates are the sum of the individual UNE network elements (interoffice transport and loop [channelization if applicable].											
4-wire 64 kbps Interoffice Channel and 4-wire 64 kbps Local Loop:											
Recurring Charges											
4-wire 64kbps Loop per month, Zone 1 (Note 1)	UDL64	NA	$39.08	$26.44	NA	$27.50	NA	TBD	NA	$36.45
4-wire 64kbps Loop per month, Zone 2 (Note 1)	UDL64	NA	$57.21	$30.53	NA	$47.24	NA	TBD	NA	$45.87
4-wire 64kbps Loop per month, Zone 3 (Note 1)	UDL64	NA	$126.22	$46.53	NA	$96.48	NA	TBD	NA	$65.75
4-wire 64kbps Loop per month, Zone 4 (Note 1)	NA	NA	NA	NA	NA	NA	NA	NA	NA	NA
Interoffice Channel - Dedicated - 4-wire 64kbps - FacilityTermination per month	U1TD6	NA	$19.31	$16.45	NA	$18.37	NA	$17.40	NA	$17.74
Interoffice Channel - Dedicated - 4-wire 64kbps - per mile per month	1L5XX	NA	$0.0098	$0.0222	NA	$0.0384	NA	$0.0282	NA	$0.1730
Non-Recurring Charges - New EEL (Note 2)(Note 3)										
NRC- 4-wire 64kbps interoffice - 1st	U1TD6	NA	$160.33	$79.61	NA	$713.57	NA	$137.48	NA	$729.27
NRC- 4-wire 64kbps interoffice - Add'l	U1TD6	NA	$73.44	$36.08	NA	$404.36	NA	$52.58	NA	$411.98
NRC-4-wire 64kbps Local Loop - 1st	UDL64	NA	$329.76	$348.55	NA	$811.30	NA	$489.04	NA	$829.52
NRC-4-wire 64kbps Local Loop - Add'l	UDL64	NA	$148.55	$241.20	NA	$502.09	NA	$337.51	NA	$512.23
NRC-4-wire 64kbps interoffice channel and 4-wire 64kbps Local Loop Combination -	SOMEC	NA	$3.17	$3.50	NA	$3.50	NA	$3.50	NA	$3.50
NRC-4-wire 64kbps interoffice channel and 4-wire 64kbps Local Loop Combination -	SOMAN	NA	$25.40	NA	NA	NA	NA	NA	NA	$19.99
NRC-4-wire 64kbps interoffice channel and 4-wire 64kbps Local Loop Combination -	SOMAN	NA	NA	$37.55	NA	$100.50	NA	$65.01	NA	NA
NRC-4-wire 64kbps interoffice channel and 4-wire 64kbps Local Loop Combination -	SOMAN	NA	NA	$37.55	NA	$100.50	NA	$50.83	NA	NA
NRC-4-wire 64kbps interoffice channel and 4-wire 64kbps Local Loop Combination -	SOMAN	NA	NA	$18.03	NA	$41.88	NA	NA	NA	NA
NRC-4-wire 64kbps interoffice channel and 4-wire 64kbps Local Loop Combination -	SOMAN	NA	NA	$18.03	NA	$41.88	NA	NA	NA	NA
Network Elements used in Existing Combinations at UNE Rates (Note4)	USOC	AL	FL	GA	KY	LA	MS	NC	SC	TN
Local Loop:										
2-Wire Analog Voice Grade Loop - Service Level 2										
2-Wire Analog Voice Grade Loop - per mile per month	UNCVX	1L5ND	$0.00	$0.00	$0.00	$0.00	$0.00	$0.00	$0.00	$0.00
2-Wire Analog Voice Grade Loop -per month	UEAL2	NA	NA	NA	NA	NA	NA	$19.50	NA	NA
Zone 1	UEAL2	$17.95	$20.52	$15.40	$17.27	$17.65	$18.35	TBD	$16.58	$15.54
Zone 2	UEAL2	$29.16	TBD	$17.78	$32.32	$30.32	$24.33	TBD	$27.59	$19.55
Zone 3	UEAL2	$52.84	TBD	$28.26	$55.78	$61.93	$34.77	TBD	$31.87	$28.02
Zone 4	UEAL2	NA	NA	NA	NA	NA	$45.88	NA	NA	NA
NRC - Ordinarily Combined in GA (Note 5)										
NRC - 1st	UEAL2	NA	NA	$104.17	NA	NA	NA	NA	NA	NA
NRC - Add'l	UEAL2	NA	NA	$78.10	NA	NA	NA	NA	NA	NA
NRC - Disconnect Charge - 1st	UEAL2	NA	NA	NA	NA	NA	NA	NA	NA	NA
NRC - Disconnect Charge - Add'l	UEAL2	NA	NA	NA	NA	NA	NA	NA	NA	NA
NRC - Electronic Svc Order, per LSR	SOMEC	NA	NA	$3.50	NA	NA	NA	NA	NA	NA
NRC - Incremental Charge - Manual Service Order - 1st	SOMAN	NA	NA	$18.94	NA	NA	NA	NA	NA	NA
NRC - Incremental Charge - Manual Service Order - Add'l	SOMAN	NA	NA	$8.42	NA	NA	NA	NA	NA	NA
NRC - Incremental Charge - Manual Service Order - Disconnect	SOMAN	NA	NA	NA	NA	NA	NA	NA	NA	NA
NRC-All Existing Combination "Switch As Is" Conversion Charge (Note 6)										
NRC-2/4-WIRE COMBINATION - "Switch As Is" Conversion Charge - 1st	UNCCC	$54.03	$32.75	$58.43	$54.09	$54.23	$54.09	$54.00	$54.26	$54.13
NRC-2/4-WIRE COMBINATION - "Switch As Is" Conversion Charge - Add'l	UNCCC	$32.11	$32.75	$26.99	$32.16	$32.24	$32.16	$32.10	$32.25	$32.17
NRC- 2/4-WIRE COMBINATION - "Switch As Is" Conversion Charge - Disconnect - 1st	UNCCC	$0.00	$16.77	$12.61	$0.00	$0.00	$0.00	$0.00	$0.00	$0.00
NRC- 2/4-WIRE COMBINATION - "Switch As Is" Conversion Charge - Disconnect - Add'l	UNCCC	$0.00	$16.77	$12.61	$0.00	$0.00	$0.00	$0.00	$0.00	$0.00
2-Wire Analog Voice Grade Loop - Service Level 2 - (reverse battery)										
2-Wire Analog Voice Grade Loop - Loop[Start - per mile per montl	1L5ND	$0.00	$0.00	$0.00	$0.00	$0.00	$0.00	$0.00	$0.00	$0.00
2-Wire Analog Voice Grade Loop - Rev Bat - per montl	UEAR2	NA	$20.52	NA	NA	NA	NA	$19.50	NA	NA
Zone 1	UEAR2	$17.95	$23.23	$16.84	$17.27	$17.65	$18.35	TBD	$21.57	$15.54
Zone 2	UEAR2	$29.16	$22.43	$19.45	$32.32	$30.32	$24.33	TBD	$32.53	$19.55
Zone 3	UEAR2	$52.84	$27.87	$30.92	$55.78	$61.93	$34.77	TBD	$43.08	$28.02
Zone 4	UEAR2	NA	NA	NA	NA	NA	$45.88	NA	NA	NA
NRC - Ordinarily Combined in GA (Note 5)										
NRC - 1st	UEAR2	NA	NA	$104.17	NA	NA	NA	NA	NA	NA
NRC - Add'l	UEAR2	NA	NA	$78.10	NA	NA	NA	NA	NA	NA

		New EEL rates are the sum of the individual UNE network elements (interoffice transport and loop [channelization if applicable].									
		NRC - Disconnect Charge - 1st	UEAR2	NA	NA	NA	NA	NA	NA	NA	NA	NA
		NRC - Disconnect Charge - Add'	UEAR2	NA	NA	NA	NA	NA	NA	NA	NA	NA
		NRC - Electronic Svc Order, per LSR	SOMEC	NA	NA	$3.50	NA	NA	NA	NA	NA	NA
		NRC - Incremental Charge - Manual Service Order - 1s	SOMAN	NA	NA	$18.94	NA	NA	NA	NA	NA	NA
		NRC - Incremental Charge - Manual Service Order - Add	SOMAN	NA	NA	$8.42	NA	NA	NA	NA	NA	NA
		NRC - Incremental Charge - Manual Service Order - Disconnec	SOMAN	NA	NA	NA	NA	NA	NA	NA	NA	NA
		NRC-All Existing Combination "Switch As Is" Conversion Charge (Note 6)										
		NRC-2/4-WIRE COMBINATION - "Switch As Is" Conversion Charge - 1st	UNCCC	$54.03	$32.75	$58.43	$54.09	$54.23	$54.09	$54.00	$54.26	$54.13
		NRC-2/4-WIRE COMBINATION - "Switch As Is" Conversion Charge - Add'l	UNCCC	$32.11	$32.75	$26.99	$32.16	$32.24	$32.16	$32.10	$32.25	$32.17
		NRC- 2/4-WIRE COMBINATION - "Switch As Is" Conversion Charge - Disconnect - 1st	UNCCC	$0.00	$16.77	$12.61	$0.00	$0.00	$0.00	$0.00	$0.00	$0.00
		NRC- 2/4-WIRE COMBINATION - "Switch As Is" Conversion Charge - Disconnect - Add'l	UNCCC	$0.00	$16.77	$12.61	$0.00	$0.00	$0.00	$0.00	$0.00	$0.00
		4-Wire Analog Voice Grade Loop										
		4-Wire Analog Voice Grade Loop per mile per month	1L5ND	$0.00	$0.00	$0.00	$0.00	$0.00	$0.00	$0.00	$0.00	$0.00
		Zone 1	UEAL4	$24.01	$24.26	$22.88	$20.92	$24.36	$22.38	$23.51	$49.47	$15.54
		Zone 2	UEAL4	$39.00	$35.51	$26.42	$39.14	$41.85	$29.67	$38.53	$44.44	$19.55
		Zone 3	UEAL4	$70.67	$78.35	$41.99	$67.56	$85.47	$42.40	$44.38	$58.85	$28.02
		Zone 4	UEAL4	NA	NA	NA	NA	NA	$55.96	NA	NA	NA
		NRC - Ordinarily Combined in GA (Note 5)										
		NRC - 1st	UEAL4	NA	NA	$206.95	NA	NA	NA	NA	NA	NA
		NRC - Add'l	UEAL4	NA	NA	$170.57	NA	NA	NA	NA	NA	NA
		NRC - Disconnect Charge - 1st	UEAL4	NA	NA	NA	NA	NA	NA	NA	NA	NA
		NRC - Disconnect Charge - Add'l	UEAL4	NA	NA	NA	NA	NA	NA	NA	NA	NA
		NRC - Electronic Svc Order, per LSR	SOMEC	NA	NA	$3.50	NA	NA	NA	NA	NA	NA
		NRC - Incremental Charge - Manual Service Order - 1st	SOMAN	NA	NA	NA	NA	NA	NA	NA	NA	NA
		NRC - Incremental Charge - Manual Service Order - Add'l	SOMAN	NA	NA	$8.42	NA	NA	NA	NA	NA	NA
		NRC - Incremental Charge - Manual Service Order - Disconnect	SOMAN	NA	NA	NA	NA	NA	NA	NA	NA	NA
		NRC-All Existing Combination "Switch As Is" Conversion Charge (Note 6)										
		NRC-2/4-WIRE COMBINATION - "Switch As Is" Conversion Charge - 1st	UNCCC	$54.03	$32.75	$58.43	$54.09	$54.23	$54.09	$54.00	$54.26	$54.13
		NRC-2/4-WIRE COMBINATION - "Switch As Is" Conversion Charge - Add'l	UNCCC	$32.11	$32.75	$26.99	$32.16	$32.24	$32.16	$32.10	$32.25	$32.17
		NRC- 2/4-WIRE COMBINATION - "Switch As Is" Conversion Charge - Disconnect - 1st	UNCCC	$0.00	$16.77	$12.61	$0.00	$0.00	$0.00	$0.00	$0.00	$0.00
		NRC- 2/4-WIRE COMBINATION - "Switch As Is" Conversion Charge - Disconnect - Add'l	UNCCC	$0.00	$16.77	$12.61	$0.00	$0.00	$0.00	$0.00	$0.00	$0.00
		2-Wire ISDN Digital Grade Loop										
		2-Wire ISDN Loop per mile per month	1L5ND	$0.00	$0.00	$0.00	$0.00	$0.00	$0.00	$0.00	$0.00	$0.00
		2-Wire ISDN Digital Grade Loop per month	U1L2X	NA	NA	NA	NA	NA	NA	$24.98	NA	NA
		Zone 1	U1L2X	$23.23	$32.34	$21.89	$23.66	$21.15	$21.86	TBD	$21.40	$15.54
		Zone 2	U1L2X	$37.74	$47.35	$25.27	$44.28	$36.32	$28.97	TBD	$34.91	$19.55
		Zone 3	U1L2X	$68.38	$104.47	$40.17	$76.42	$74.19	$41.40	TBD	$40.17	$28.02
		Zone 4	U1L2X	NA	NA	NA	NA	NA	$54.64	NA	NA	NA
		NRC - Ordinarily Combined in GA (Note 5)										
		NRC - 1st	U1L2X	NA	NA	$233.38	NA	NA	NA	NA	NA	NA
		NRC - Add'l	U1L2X	NA	NA	$180.35	NA	NA	NA	NA	NA	NA
		NRC - Disconnect Dharge - 1st	U1L2X	NA	NA	NA	NA	NA	NA	NA	NA	NA
		NRC - Disconnect Charge - Add'l	U1L2X	NA	NA	NA	NA	NA	NA	NA	NA	NA
		NRC - Electronic Svc Order, per LSR	SOMEC	NA	NA	$3.50	NA	NA	NA	NA	NA	NA
		NRC - Incremental Charge - Manual Service Order - 1st	SOMAN	NA	NA	$18.94	NA	NA	NA	NA	NA	NA
		NRC - Incremental Charge - Manual Service Order - Add'l	SOMAN	NA	NA	$8.42	NA	NA	NA	NA	NA	NA
		NRC - Incremental Charge - Manual Service Order - Disconnect	SOMAN	NA	NA	NA	NA	NA	NA	NA	NA	NA
		NRC-All Existing Combination "Switch As Is" Conversion Charge (Note 6)										
		NRC-2/4-WIRE COMBINATION - "Switch As Is" Conversion Charge - 1st	UNCCC	$54.03	$32.75	$58.43	$54.09	$54.23	$54.09	$54.00	$54.26	$54.13
		NRC-2/4-WIRE COMBINATION - "Switch As Is" Conversion Charge - Add'l	UNCCC	$32.11	$32.75	$26.99	$32.16	$32.24	$32.16	$32.10	$32.25	$32.17
		NRC- 2/4-WIRE COMBINATION - "Switch As Is" Conversion Charge - Disconnect - 1st	UNCCC	$0.00	$16.77	$12.61	$0.00	$0.00	$0.00	$0.00	$0.00	$0.00
		NRC- 2/4-WIRE COMBINATION - "Switch As Is" Conversion Charge - Disconnect - Add'l	UNCCC	$0.00	$16.77	$12.61	$0.00	$0.00	$0.00	$0.00	$0.00	$0.00

		New EEL rates are the sum of the individual UNE network elements (interoffice transport and loop [channelization if applicable].									
		4-Wire 56 kbps Digital Grade Loop									
		4-Wire 56 kbps Digital Grade Loop per mile per month	1L5ND	$0.00	$0.00	$0.00	$0.00	$0.00	$0.00	$0.00	$0.00	$0.00
		4-Wire 56 kbps Digital Grade Loop per month	UDL56	NA	NA	NA	NA	NA	NA	$32.67	NA	NA
		Zone 1	UDL56	$27.33	$33.90	$26.44	NA	$27.50	$25.61	TBD	$27.94	$36.45
		Zone 2	UDL56	$44.40	$44.72	$30.53	NA	$47.25	$33.94	TBD	$45.81	$45.87
		Zone 3	UDL56	$80.45	$50.85	$46.53	NA	$96.48	$48.51	TBD	$52.76	$65.75
		Zone 4	UDL56	NA	NA	NA	NA	NA	$64.02	NA	NA	NA
		NRC - Ordinarily Combined in GA (Note 5)										
		NRC - 1st	UDL56	NA	NA	$348.55	NA	NA	NA	NA	NA	NA
		NRC - Add'l	UDL56	NA	NA	$241.20	NA	NA	NA	NA	NA	NA
		NRC - Disconnect Dharge - 1st	UDL56	NA	NA	NA	NA	NA	NA	NA	NA	NA
		NRC - Disconnect Charge - Add'l	UDL56	NA	NA	NA	NA	NA	NA	NA	NA	NA
		NRC - Electronic Svc Order, per LSR	SOMEC	NA	NA	$3.50	NA	NA	NA	NA	NA	NA
		NRC - Incremental Charge - Manual Service Order - 1st	SOMAN	NA	NA	$18.94	NA	NA	NA	NA	NA	NA
		NRC - Incremental Charge - Manual Service Order - Add'l	SOMAN	NA	NA	$8.42	NA	NA	NA	NA	NA	NA
		NRC - Incremental Charge - Manual Service Order - Disconnect	SOMAN	NA	NA	NA	NA	NA	NA	NA	NA	NA
		NRC-All Existing Combination "Switch As Is" Conversion Charge (Note 6)										
		NRC-2/4-WIRE COMBINATION - "Switch As Is" Conversion Charge - 1st	UNCCC	$54.03	$32.75	$58.43	$54.09	$54.23	$54.09	$54.00	$54.26	$54.13
		NRC-2/4-WIRE COMBINATION - "Switch As Is" Conversion Charge - Add'l	UNCCC	$32.11	$32.75	$26.99	$32.16	$32.24	$32.16	$32.10	$32.25	$32.17
		NRC- 2/4-WIRE COMBINATION - "Switch As Is" Conversion Charge - Disconnect - 1st	UNCCC	$0.00	$16.77	$12.61	$0.00	$0.00	$0.00	$0.00	$0.00	$0.00
		NRC- 2/4-WIRE COMBINATION - "Switch As Is" Conversion Charge - Disconnect - Add'l	UNCCC	$0.00	$16.77	$12.61	$0.00	$0.00	$0.00	$0.00	$0.00	$0.00
		4-Wire 64 kbps Digital Grade Loop										
		4-Wire 64 kbps Digital Grade Loop per mile per month	1L5ND	$0.00	$0.00	$0.00	$0.00	$0.00	$0.00	$0.00	$0.00	$0.00
		4-Wire 64 kbps Digital Grade Loop per month	UDL64	NA	NA	NA	NA	NA	NA	$32.67	NA	NA
		Zone 1	UDL64	$27.33	$33.90	$26.44	NA	$27.50	$25.61	TBD	$27.94	$36.45
		Zone 2	UDL64	$44.40	$44.72	$30.53	NA	$47.25	$33.94	TBD	$45.81	$45.87
		Zone 3	UDL64	$80.45	$50.85	$46.53	NA	$96.48	$48.51	TBD	$52.76	$65.75
		Zone 4	UDL64	NA	NA	NA	NA	NA	$64.02	NA	NA	NA
		NRC - Ordinarily Combined in GA (Note 5)										
		NRC - 1st	UDL64	NA	NA	$348.55	NA	NA	NA	NA	NA	NA
		NRC - Add'l	UDL64	NA	NA	$241.20	NA	NA	NA	NA	NA	NA
		NRC - Disconnect Dharge - 1st	UDL64	NA	NA	NA	NA	NA	NA	NA	NA	NA
		NRC - Disconnect Charge - Add'l	UDL64	NA	NA	NA	NA	NA	NA	NA	NA	NA
		NRC - Electronic Svc Order, per LSR	SOMEC	NA	NA	$3.50	NA	NA	NA	NA	NA	NA
		NRC - Incremental Charge - Manual Service Order - 1st	SOMAN	NA	NA	$18.94	NA	NA	NA	NA	NA	NA
		NRC - Incremental Charge - Manual Service Order - Add'l	SOMAN	NA	NA	$8.42	NA	NA	NA	NA	NA	NA
		NRC - Incremental Charge - Manual Service Order - Disconnect	SOMAN	NA	NA	NA	NA	NA	NA	NA	NA	NA
		NRC-All Existing Combination "Switch As Is" Conversion Charge (Note 6)										
		NRC-2/4-WIRE COMBINATION - "Switch As Is" Conversion Charge - 1st	UNCCC	$54.03	$32.75	$58.43	$54.09	$54.23	$54.09	$54.00	$54.26	$54.13
		NRC-2/4-WIRE COMBINATION - "Switch As Is" Conversion Charge - Add'l	UNCCC	$32.11	$32.75	$26.99	$32.16	$32.24	$32.16	$32.10	$32.25	$32.17
		NRC- 2/4-WIRE COMBINATION - "Switch As Is" Conversion Charge - Disconnect - 1st	UNCCC	$0.00	$16.77	$12.61	$0.00	$0.00	$0.00	$0.00	$0.00	$0.00
		NRC- 2/4-WIRE COMBINATION - "Switch As Is" Conversion Charge - Disconnect - Add'l	UNCCC	$0.00	$16.77	$12.61	$0.00	$0.00	$0.00	$0.00	$0.00	$0.00
		4-Wire DS1 Digital Loop										
		4-Wire DS1 Digital Loop per mile per month	1L5ND	$0.00	$0.00	$0.00	$0.00	$0.00	$0.00	$0.00	$0.00	$0.00
		4-Wire DS1 Digital Loop per month	USLXX	NA	NA	NA	NA	NA	NA	$62.78	NA	NA
		Zone 1	USLXX	$51.74	$64.69	$52.40	$50.28	$56.32	$50.99	TBD	$53.00	NA
		Zone 2	USLXX	$84.05	$94.71	$60.51	$94.06	$96.73	$67.58	TBD	$89.93	NA
		Zone 3	USLXX	$152.29	$208.93	$96.18	$162.34	$197.57	$96.58	TBD	$104.30	NA
		Zone 4	USLXX	NA	NA	NA	NA	NA	$127.47	NA	NA	NA
		NRC - Ordinarily Combined in GA (Note 5)										
		NRC - 1st	USLXX	NA	NA	$429.98	NA	NA	NA	NA	NA	NA
		NRC - Add'l	USLXX	NA	NA	$268.18	NA	NA	NA	NA	NA	NA
		NRC - Disconnect Charge - 1st	USLXX	NA	NA	NA	NA	NA	NA	NA	NA	NA

		New EEL rates are the sum of the individual UNE network elements (interoffice transport and loop [channelization if applicable].									
		NRC - Disconnect Charge - Add'l	USLXX	NA	NA	NA	NA	NA	NA	NA	NA	NA
		NRC - Electronic Svc Order, per LSR	SOMEC	NA	NA	$3.50	NA	NA	NA	NA	NA	NA
		NRC - Incremental Charge - Manual Service Order - 1st	SOMAN	NA	NA	$18.94	NA	NA	NA	NA	NA	NA
		NRC - Incremental Charge - Manual Service Order - Add'l	SOMAN	NA	NA	$8.42	NA	NA	NA	NA	NA	NA
		NRC - Incremental Charge - Manual Service Order - Disconnect	SOMAN	NA	NA	NA	NA	NA	NA	NA	NA	NA
		NRC-All Existing Combination "Switch As Is" Conversion Charge (Note 6)										
		NRC-DS1 COMBINATION - "Switch As Is" Conversion Charge - 1st	UNCCC	$54.03	$32.75	$58.43	$54.09	$54.23	$54.09	$54.00	$54.26	$54.13
		NRC-DS1 COMBINATION - "Switch As Is" Conversion Charge - Add'l	UNCCC	$32.11	$32.75	$26.99	$32.16	$32.24	$32.16	$32.10	$32.25	$32.17
		NRC- DS1 COMBINATION - "Switch As Is" Conversion Charge - Disconnect - 1st	UNCCC	$0.00	$16.77	$12.61	$0.00	$0.00	$0.00	$0.00	$0.00	$0.00
		NRC- DS1 COMBINATION - "Switch As Is" Conversion Charge - Disconnect - Add'l	UNCCC	$0.00	$16.77	$12.61	$0.00	$0.00	$0.00	$0.00	$0.00	$0.00
		DS3 Local Loop										
		per mile per month	1L5ND	$10.85	$11.77	$8.90	$43.69	$38.98	$54.39	$32.53	$15.53	$30.53
		facitility termination per month	UE3PX	$419.65	$404.58	$390.34	$436.95	$497.08	$427.81	$387.01	$421.60	$400.21
		NRC - Ordinarily Combined in GA (Note 5)										
		NRC - Facility Termination - 1st	UE3PX	NA	NA	$639.50	NA	NA	NA	NA	NA	NA
		NRC - Facility Termination - Add'l	UE3PX	NA	NA	$426.40	NA	NA	NA	NA	NA	NA
		NRC - Facility Termination - Disconnect - 1st	UE3PX	NA	NA	$122.31	NA	NA	NA	NA	NA	NA
		NRC - Facility Termination - Disconnect - Add'l	UE3PX	NA	NA	$119.14	NA	NA	NA	NA	NA	NA
		NRC - Manual Svc Order, per LSR	SOMAN	NA	NA	NA	NA	NA	NA	NA	NA	NA
		NRC - Manual Svc Order, per LSR disconnect	SOMAN	NA	NA	NA	NA	NA	NA	NA	NA	NA
		NRC - Electronic Svc Order, per LSR	SOMEC	NA	NA	$3.50	NA	NA	NA	NA	NA	NA
		NRC - Electronic Svc Order, per LSR disconnect	SOMEC	NA	NA	NA	NA	NA	NA	NA	NA	NA
		NRC - Incremental Charge--Manual Svc Order - 1st	SOMAN	NA	NA	$37.55	NA	NA	NA	NA	NA	NA
		NRC - Incremental Charge--Manual Svc Order - Add'l	SOMAN	NA	NA	$37.55	NA	NA	NA	NA	NA	NA
		NRC - Incremental Cost - Manual Svc. Order vs. Elect-Disconnect-1st	SOMAN	NA	NA	$18.03	NA	NA	NA	NA	NA	NA
		NRC - Incremental Cost - Manual Svc. Order vs. Elect-Disconnect-Add'l	SOMAN	NA	NA	$18.03	NA	NA	NA	NA	NA	NA
		NRC-All Existing Combination "Switch As Is" Conversion Charge (Note 6)										
		NRC-DS3 COMBINATION - "Switch As Is" Conversion Charge - 1st	UNCCC	$54.03	$32.75	$58.43	$54.09	$54.23	$54.09	$54.00	$54.26	$54.13
		NRC-DS3 COMBINATION - "Switch As Is" Conversion Charge - Add'l	UNCCC	$32.11	$32.75	$26.99	$32.16	$32.24	$32.16	$32.10	$32.25	$32.17
		NRC- DS3 COMBINATION - "Switch As Is" Conversion Charge - Disconnect - 1st	UNCCC	$0.00	$16.77	$12.61	$0.00	$0.00	$0.00	$0.00	$0.00	$0.00
		NRC- DS3 COMBINATION - "Switch As Is" Conversion Charge - Disconnect - Add'l	UNCCC	$0.00	$16.77	$12.61	$0.00	$0.00	$0.00	$0.00	$0.00	$0.00
		STS-1 Local Loop										
		per mile per month	1L5ND	$10.85	$11.77	$8.90	$43.69	$38.98	$54.39	$32.53	$15.53	$30.53
		facitility termination per month	UDLS1	$419.65	$446.09	$421.59	$436.95	$497.08	$427.81	$387.01	$431.32	$400.21
		NRC - Ordinarily Combined in GA (Note 5)										
		NRC - STS-1 - Facility Termination - 1st	UDLS1	NA	NA	$639.50	NA	NA	NA	NA	NA	NA
		NRC - STS-1 - Facility Termination - Add'l	UDLS1	NA	NA	$426.40	NA	NA	NA	NA	NA	NA
		NRC - STS-1 - Facility Termination - Disconnect - 1st	UDLS1	NA	NA	$122.31	NA	NA	NA	NA	NA	NA
		NRC - STS-1 - Facility Termination - Disconnect - Add'l	UDLS1	NA	NA	$119.14	NA	NA	NA	NA	NA	NA
		NRC - Manual Svc Order, per LSR	SOMAN	NA	NA	NA	NA	NA	NA	NA	NA	NA
		NRC - Manual Svc Order, per LSR disconnect	SOMAN	NA	NA	NA	NA	NA	NA	NA	NA	NA
		NRC - Electronic Svc Order, per LSR	SOMEC	NA	NA	$3.50	NA	NA	NA	NA	NA	NA
		NRC - Electronic Svc Order, per LSR disconnect	SOMEC	NA	NA	NA	NA	NA	NA	NA	NA	NA
		NRC - STS-1 - Incremental Charge--Manual Svc Order - 1st	SOMAN	NA	NA	$37.55	NA	NA	NA	NA	NA	NA
		NRC - STS-1 - Incremental Charge--Manual Svc Order - Add'l	SOMAN	NA	NA	$37.55	NA	NA	NA	NA	NA	NA
		NRC - STS-1 - Incremental Cost - Manual Svc. Order vs. Elect-Disconnect-1st	SOMAN	NA	NA	$18.03	NA	NA	NA	NA	NA	NA
		NRC - STS-1 - Incremental Cost - Manual Svc. Order vs. Elect-Disconnect-Ad	SOMAN	NA	NA	$18.03	NA	NA	NA	NA	NA	NA
		NRC-All Existing Combination "Switch As Is" Conversion Charge (Note 6)										
		NRC-STS-1 COMBINATION - "Switch As Is" Conversion Charge - 1st	UNCCC	$54.03	$32.75	$58.43	$54.09	$54.23	$54.09	$54.00	$54.26	$54.13
		NRC-STS-1 COMBINATION - "Switch As Is" Conversion Charge - Add'l	UNCCC	$32.11	$32.75	$26.99	$32.16	$32.24	$32.16	$32.10	$32.25	$32.17
		NRC- STS-1 COMBINATION - "Switch As Is" Conversion Charge - Disconnect - 1st	UNCCC	$0.00	$16.77	$12.61	$0.00	$0.00	$0.00	$0.00	$0.00	$0.00
		NRC- STS-1 COMBINATION - "Switch As Is" Conversion Charge - Disconnect - Add'l	UNCCC	$0.00	$16.77	$12.61	$0.00	$0.00	$0.00	$0.00	$0.00	$0.00

		New EEL rates are the sum of the individual UNE network elements (interoffice transport and loop [channelization if applicable].									
		OC-3 Local Loop									
		per mile per month	1L5ND	$7.09	$8.93	$6.75	$33.15	$29.58	$41.27	$24.69	$11.78	$23.16
		facility termiantion per month		$1,123	$648.60	$630.21	$436.95	$753.65	$689.68	$611.36	$701.71	$620.20
		NRC - Ordinarily Combined in GA (Note 5)										
		NRC - OC3 - Facility Termination - 1st		NA	NA	$947.69	NA	NA	NA	NA	NA	NA
		NRC - OC3 - Facility Termination - Add'l		NA	NA	$413.00	NA	NA	NA	NA	NA	NA
		NRC - OC3 - Facility Termination - Disconnect - 1st		NA	NA	$122.31	NA	NA	NA	NA	NA	NA
		NRC - OC3 - Facility Termination - Disconnect - Add'l		NA	NA	$119.14	NA	NA	NA	NA	NA	NA
		NRC - Electronic Svc Order, per LSR	SOMEC	NA	NA	$3.50	NA	NA	NA	NA	NA	NA
		NRC - OC3 - Incremental Charge--Manual Svc Order - 1st	SOMAN	NA	NA	$37.55	NA	NA	NA	NA	NA	NA
		NRC - OC3 - Incremental Charge--Manual Svc Order - Add'l	SOMAN	NA	NA	$37.55	NA	NA	NA	NA	NA	NA
		NRC - OC3 -Incremental Cost - Manual Svc. Order vs. Elect-Disconnect-1st	SOMAN	NA	NA	$18.03	NA	NA	NA	NA	NA	NA
		NRC - OC3 -Incremental Cost - Manual Svc. Order vs. Elect-Disconnect-Add'l	SOMAN	NA	NA	$18.03	NA	NA	NA	NA	NA	NA
		NRC-All Existing Combination "Switch As Is" Conversion Charge (Note 6)										
		NRC-OC-3 COMBINATION - "Switch As Is" Conversion Charge - 1st	UNCCC	$54.03	$32.75	$58.43	$54.09	$54.23	$54.09	$54.00	$54.26	$54.13
		NRC-OC-3 COMBINATION - "Switch As Is" Conversion Charge - Add'l	UNCCC	$32.11	$32.75	$26.99	$32.16	$32.24	$32.16	$32.10	$32.25	$32.17
		NRC- OC-3 COMBINATION - "Switch As Is" Conversion Charge - Disconnect - 1st	UNCCC	$0.00	$16.77	$12.61	$0.00	$0.00	$0.00	$0.00	$0.00	$0.00
		NRC- OC-3 COMBINATION - "Switch As Is" Conversion Charge - Disconnect - Add'l	UNCCC	$0.00	$16.77	$12.61	$0.00	$0.00	$0.00	$0.00	$0.00	$0.00
		OC-12 Local Loop										
		per mile per month	1L5ND	$10.13	$11.18	$8.31	$40.80	$36.40	$50.79	$30.38	$14.50	$28.51
		facility termination per month		$5,630	$2,068	$2,109.00	$2,457	$2,571	$2,371	$2,122	$2,663	$2,079
		NRC - Ordinarily Combined in GA (Note 5)										
		NRC - OC12 - Facility Termination - 1st		NA	NA	$1,162.00	NA	NA	NA	NA	NA	NA
		NRC - OC12 - Facility Termination - Add'l		NA	NA	$413.00	NA	NA	NA	NA	NA	NA
		NRC - OC12 - Facility Termination - Disconnect - 1st		NA	NA	$122.31	NA	NA	NA	NA	NA	NA
		NRC - OC12 - Facility Termination - Disconnect - Add'l		NA	NA	$119.14	NA	NA	NA	NA	NA	NA
		NRC - Electronic Svc Order, per LSR	SOMEC	NA	NA	$3.50	NA	NA	NA	NA	NA	NA
		NRC -OC12 - Incremental Charge - Manual Svc Order - 1st	SOMAN	NA	NA	$37.55	NA	NA	NA	NA	NA	NA
		NRC - OC12 - Incremental Charge - Manual Svc Order - Add'l	SOMAN	NA	NA	$37.55	NA	NA	NA	NA	NA	NA
		NRC - OC12 - Incremental Cost-Manual Svc. Order vs. Elect-Disconnect-1st	SOMAN	NA	NA	$18.03	NA	NA	NA	NA	NA	NA
		NRC - OC12 - Incremental Cost-Manual Svc. Order vs. Elect-Disconnect-Add'l	SOMAN	NA	NA	$18.03	NA	NA	NA	NA	NA	NA
		NRC-All Existing Combination "Switch As Is" Conversion Charge (Note 6)										
		NRC-OC-12 COMBINATION - "Switch As Is" Conversion Charge - 1st	UNCCC	$54.03	$32.75	$58.43	$54.09	$54.23	$54.09	$54.00	$54.26	$54.13
		NRC-OC-12 COMBINATION - "Switch As Is" Conversion Charge - Add'l	UNCCC	$32.11	$32.75	$26.99	$32.16	$32.24	$32.16	$32.10	$32.25	$32.17
		NRC- OC-12 COMBINATION - "Switch As Is" Conversion Charge - Disconnect - 1st	UNCCC	$0.00	$16.77	$12.61	$0.00	$0.00	$0.00	$0.00	$0.00	$0.00
		NRC- OC-12 COMBINATION - "Switch As Is" Conversion Charge - Disconnect - Add'l	UNCCC	$0.00	$16.77	$12.61	$0.00	$0.00	$0.00	$0.00	$0.00	$0.00
		OC-48 Local Loop										
		per mile per month	1L5ND	$33.22	$36.67	$27.25	$166.59	$119.40	$166.59	$120.02	$47.57	$93.50
		facility termination per month		$1,947	$1,699	$1,598.00	$2,129	$2,268	$1,753	$1,677	$1,733	$1,832
		OC-12 Interface on OC-48 Loop per month		$699.62	$592.09	$594.80	$725.77	$723.29	$667.00	$582.66	$773.40	$570.54
		NRC - Ordinarily Combined in GA (Note 5)										
		NRC - OC48 - Facility Termination - 1st		NA	NA	$1,162.00	NA	NA	NA	NA	NA	NA
		NRC - OC48 - Facility Termination - Add'l		NA	NA	$413.00	NA	NA	NA	NA	NA	NA
		NRC - OC48 - Interface OC12 on OC48 - 1st		NA	NA	$539.36	NA	NA	NA	NA	NA	NA
		NRC - OC48 - Interface OC12 on OC48 - Add'l		NA	NA	$317.38	NA	NA	NA	NA	NA	NA
		NRC - OC48 - Facility Termination - Disconnect - 1st		NA	NA	$122.31	NA	NA	NA	NA	NA	NA
		NRC - OC48 - Facility Termination - Disconnect - Add'l		NA	NA	$119.14	NA	NA	NA	NA	NA	NA
		NRC - OC48- Interface OC12 on OC48 - Disconnect - 1st		NA	NA	$122.31	NA	NA	NA	NA	NA	NA
		NRC - OC48 - Interface OC12 on OC48 - Disconnect - Add'l		NA	NA	$119.14	NA	NA	NA	NA	NA	NA
		NRC - Electronic Svc Order, per LSR	SOMEC	NA	NA	$3.50	NA	NA	NA	NA	NA	NA
		NRC - OC48 - Facility Termination-Manual Svc Order vs Electronic-Disconnec	SOMAN	NA	NA	$37.55	NA	NA	NA	NA	NA	NA
		NRC - OC48 - Facility Termination-Manual Svc Order vs Electronic-Disconnec	SOMAN	NA	NA	$37.55	NA	NA	NA	NA	NA	NA
		NRC - OC48 - Interface - Manual Svc Order vs Electronic-Disconnect-1st	SOMAN	NA	NA	$37.55	NA	NA	NA	NA	NA	NA

New EEL rates are the sum of the individual UNE network elements (interoffice transport and loop [channelization if applicable].											
NRC - OC48 - Interface - Manual Svc Order vs Electronic-Disconnect-Add'l	SOMAN	NA	NA	$37.55	NA	NA	NA	NA	NA	NA
NRC - OC-48 - Incremental Charge--Manual Svc Order-1st	SOMAN	NA	NA	$18.03	NA	NA	NA	NA	NA	NA
NRC - OC-48 - Incremental Charge--Manual Svc Order-Add'l	SOMAN	NA	NA	$18.03	NA	NA	NA	NA	NA	NA
NRC - OC48 - Interface OC12 on OC48 - Incremental Charge--Manual Svc Ord	SOMAN	NA	NA	$18.03	NA	NA	NA	NA	NA	NA
NRC - OC48 - Interface OC12 on OC48 - Incremental Charge--Manual Svc Ord	SOMAN	NA	NA	$18.03	NA	NA	NA	NA	NA	NA
NRC-All Existing Combination "Switch As Is" Conversion Charge (Note 6)										
NRC-OC-48 COMBINATION - "Switch As Is" Conversion Charge - 1st	UNCCC	$54.03	$32.75	$58.43	$54.09	$54.23	$54.09	$54.00	$54.26	$54.13
NRC-OC-48 COMBINATION - "Switch As Is" Conversion Charge - Add'l	UNCCC	$32.11	$32.75	$26.99	$32.16	$32.24	$32.16	$32.10	$32.25	$32.17
NRC- OC-48 COMBINATION - "Switch As Is" Conversion Charge - Disconnect - 1st	UNCCC	$0.00	$16.77	$12.61	$0.00	$0.00	$0.00	$0.00	$0.00	$0.00
NRC- OC-48 COMBINATION - "Switch As Is" Conversion Charge - Disconnect - Add'l	UNCCC	$0.00	$16.77	$12.61	$0.00	$0.00	$0.00	$0.00	$0.00	$0.00
Local Channels:										
Local Channel - Dedicated - 2-Wire VG										
Monthly Recurring per month	ULDV2	$14.61	$29.33	$13.91	$22.26	$14.94	$17.83	$14.83	$16.83	$19.02
Monthly Recurring per mile per month	1L5NC	$0.00	$0.00	$0.00	$0.00	$0.00	$0.00	$0.00	$0.00	$0.00
NRC - Ordinarily Combined in GA (Note 5)										
NRC - 2-wire VG Local Channel - 1st	ULDV2	NA	NA	$245.43	NA	NA	NA	NA	NA	NA
NRC - 2-wire VG Local Channel -Add'l	ULDV2	NA	NA	$33.90	NA	NA	NA	NA	NA	NA
NRC - Electronic Svc Order, per LSR	SOMEC	NA	NA	$3.50	NA	NA	NA	NA	NA	NA
NRC - 2-Wire VG - Incremental Charge--Manual Svc Order - 1st	SOMAN	NA	NA	$33.63	NA	NA	NA	NA	NA	NA
NRC - 2-Wire VG - Incremental Charge--Manual Svc Order - Add'l	SOMAN	NA	NA	$27.49	NA	NA	NA	NA	NA	NA
NRC - 2-Wire VG - Incremental Charge--Manual Svc Order - Disconnect - 1st	SOMAN	NA	NA	$22.24	NA	NA	NA	NA	NA	NA
NRC - 2-Wire VG - Incremental Charge--Manual Svc Order - Disconnect - Add'l	SOMAN	NA	NA	$8.08	NA	NA	NA	NA	NA	NA
NRC-All Existing Combination "Switch As Is" Conversion Charge (Note 6)										
NRC-2/4-WIRE COMBINATION - "Switch As Is" Conversion Charge - 1st	UNCCC	$54.03	$32.75	$58.43	$54.09	$54.23	$54.09	$54.00	$54.26	$54.13
NRC-2/4-WIRE COMBINATION - "Switch As Is" Conversion Charge - Add'l	UNCCC	$32.11	$32.75	$26.99	$32.16	$32.24	$32.16	$32.10	$32.25	$32.17
NRC- 2/4-WIRE COMBINATION - "Switch As Is" Conversion Charge - Disconnect - 1st	UNCCC	$0.00	$16.77	$12.61	$0.00	$0.00	$0.00	$0.00	$0.00	$0.00
NRC- 2/4-WIRE COMBINATION - "Switch As Is" Conversion Charge - Disconnect - Add'l	UNCCC	$0.00	$16.77	$12.61	$0.00	$0.00	$0.00	$0.00	$0.00	$0.00
Local Channel - Dedicated - 2-Wire VG - Rev Bat.										
Monthly Recurring per month	ULDR2	$14.61	$26.31	$13.91	$22.26	$14.94	$17.83	$14.82	$16.83	$19.02
Monthly Recurring per mile per month	1L5NC	$0.00	$0.00	$0.00	$0.00	$0.00	$0.00	$0.00	$0.00	$0.00
NRC - Ordinarily Combined in GA (Note 5)										
NRC - 2-wire VG Local Channel - 1st	ULDR2	NA	NA	$245.43	NA	NA	NA	NA	NA	NA
NRC - 2-wire VG Local Channel -Add'l	ULDR2	NA	NA	$33.90	NA	NA	NA	NA	NA	NA
NRC - Electronic Svc Order, per LSR	SOMEC	NA	NA	$3.50	NA	NA	NA	NA	NA	NA
NRC - 2-Wire VG - Incremental Charge--Manual Svc Order - 1st	SOMAN	NA	NA	$33.63	NA	NA	NA	NA	NA	NA
NRC - 2-Wire VG - Incremental Charge--Manual Svc Order - Add'l	SOMAN	NA	NA	$27.49	NA	NA	NA	NA	NA	NA
NRC - 2-Wire VG - Incremental Charge--Manual Svc Order - Disconnect - 1st	SOMAN	NA	NA	$22.24	NA	NA	NA	NA	NA	NA
NRC - 2-Wire VG - Incremental Charge--Manual Svc Order - Disconnect - Add'l	SOMAN	NA	NA	$8.08	NA	NA	NA	NA	NA	NA
NRC-All Existing Combination "Switch As Is" Conversion Charge (Note 6)										
NRC-2/4-WIRE COMBINATION - "Switch As Is" Conversion Charge - 1st	UNCCC	$54.03	$32.75	$58.43	$54.09	$54.23	$54.09	$54.00	$54.26	$54.13
NRC-2/4-WIRE COMBINATION - "Switch As Is" Conversion Charge - Add'l	UNCCC	$32.11	$32.75	$26.99	$32.16	$32.24	$32.16	$32.10	$32.25	$32.17
NRC- 2/4-WIRE COMBINATION - "Switch As Is" Conversion Charge - Disconnect - 1st	UNCCC	$0.00	$16.77	$12.61	$0.00	$0.00	$0.00	$0.00	$0.00	$0.00
NRC- 2/4-WIRE COMBINATION - "Switch As Is" Conversion Charge - Disconnect - Add'l	UNCCC	$0.00	$16.77	$12.61	$0.00	$0.00	$0.00	$0.00	$0.00	$0.00
Local Channel - Dedicated - 4-Wire VG										
Monthly Recurring per month	ULDV4	$15.77	$30.50	$14.99	$23.38	$16.21	$19.03	$15.87	$18.05	$20.14
Monthly Recurring per mile per month	1L5NC	$0.00	$0.00	$0.00	$0.00	$0.00	$0.00	$0.00	$0.00	$0.00
NRC - Ordinarily Combined in GA (Note 5)										
NRC-4-wire VG Local Channel - 1st	ULDV4	NA	NA	$245.43	NA	NA	NA	NA	NA	NA
NRC-4-wire VG Local Channel - Add'l	ULDV4	NA	NA	$33.90	NA	NA	NA	NA	NA	NA
NRC - Electronic Svc Order, per LSR	SOMEC	NA	NA	$3.50	NA	NA	NA	NA	NA	NA
NRC - 4-Wire VG Local Channel - Incremental Charge--Manual Svc Order - 1st	SOMAN	NA	NA	$33.63	NA	NA	NA	NA	NA	NA
NRC - 4-Wire VG Local Channel - Incremental Charge--Manual Svc Order - Add'l	SOMAN	NA	NA	$27.49	NA	NA	NA	NA	NA	NA

		New EEL rates are the sum of the individual UNE network elements (interoffice transport and loop [channelization if applicable].									
		NRC - 4-Wire VG Local Channel - Incremental Charge--Manual Svc Order - Disconi	SOMAN	NA	NA	$22.24	NA	NA	NA	NA	NA	NA
		NRC - 4-Wire VG Local Channel - Incremental Charge--Manual Svc Order - Disconi	SOMAN	NA	NA	$8.08	NA	NA	NA	NA	NA	NA
		NRC-All Existing Combination "Switch As Is" Conversion Charge (Note 6)										
		NRC-2/4-WIRE COMBINATION - "Switch As Is" Conversion Charge - 1st	UNCCC	$54.03	$32.75	$58.43	$54.09	$54.23	$54.09	$54.00	$54.26	$54.13
		NRC-2/4-WIRE COMBINATION - "Switch As Is" Conversion Charge - Add'l	UNCCC	$32.11	$32.75	$26.99	$32.16	$32.24	$32.16	$32.10	$32.25	$32.17
		NRC- 2/4-WIRE COMBINATION - "Switch As Is" Conversion Charge - Disconnect - 1st	UNCCC	$0.00	$16.77	$12.61	$0.00	$0.00	$0.00	$0.00	$0.00	$0.00
		NRC- 2/4-WIRE COMBINATION - "Switch As Is" Conversion Charge - Disconnect - Add'l	UNCCC	$0.00	$16.77	$12.61	$0.00	$0.00	$0.00	$0.00	$0.00	$0.00
		Local Channel - Dedicated - DS1										
		DS1 Monthly Recurring per month	ULDF1	$35.52	$43.53	$38.36	$43.80	$43.80	$38.91	$35.68	$37.20	$40.27
		Monthly Recurring per mile per month	1L5NC	$0.00	$0.00	$0.00	$0.00	$0.00	$0.00	$0.00	$0.00	$0.00
		NRC - Ordinarily Combined in GA (Note 5)										
		NRC - DS1 Local Channel - 1st	ULDF1	NA	NA	$166.88	NA	NA	NA	NA	NA	NA
		NRC - DS1 Local Channel - Add'l	ULDF1	NA	NA	$84.14	NA	NA	NA	NA	NA	NA
		NRC - Electronic Svc Order, per LSR	SOMEC	NA	NA	$3.50	NA	NA	NA	NA	NA	NA
		NRC - DS1 Local Channel - Incremental Charge--Manual Svc Order - 1st	SOMAN	NA	NA	$65.60	NA	NA	NA	NA	NA	NA
		NRC - DS1 Local Channel - Incremental Charge--Manual Svc Order - Add'l	SOMAN	NA	NA	$33.53	NA	NA	NA	NA	NA	NA
		NRC - DS1 Local Channel - Incremental Charge--Manual Svc Order - Disconnect - 1	SOMAN	NA	NA	$35.76	NA	NA	NA	NA	NA	NA
		NRC - DS1 Local Channel - Incremental Charge--Manual Svc Order - Disconnec - A	SOMAN	NA	NA	$14.05	NA	NA	NA	NA	NA	NA
		NRC-All Existing Combination "Switch As Is" Conversion Charge (Note 6)										
		NRC-DS1 COMBINATION - "Switch As Is" Conversion Charge - 1st	UNCCC	$54.03	$32.75	$58.43	$54.09	$54.23	$54.09	$54.00	$54.26	$54.13
		NRC-DS1 COMBINATION - "Switch As Is" Conversion Charge - Add'l	UNCCC	$32.11	$32.75	$26.99	$32.16	$32.24	$32.16	$32.10	$32.25	$32.17
		NRC- DS1 COMBINATION - "Switch As Is" Conversion Charge - Disconnect - 1st	UNCCC	$0.00	$16.77	$12.61	$0.00	$0.00	$0.00	$0.00	$0.00	$0.00
		NRC- DS1 COMBINATION - "Switch As Is" Conversion Charge - Disconnect - Add'l	UNCCC	$0.00	$16.77	$12.61	$0.00	$0.00	$0.00	$0.00	$0.00	$0.00
		Local Channel - Dedicated - DS3	USOC	AL	FL	GA	KY	LA	MS	NC	SC	TN
		DS3 Local Channel - per mile per month	1L5NC	$8.44	$9.32	$6.92	$34.00	$30.34	NA	NA	$12.08	$23.76
		DS3 Local Channel - Facility Termination per month	ULDF3	$535.92	$556.27	$515.91	$635.09	$669.01	$533.33	$498.87	$493.31	$607.28
		NRC - Ordinarily Combined in GA (Note 5)										
		NRC - DS3 Local Channel Facility Termination - 1st	ULDF3	NA	NA	$639.50	NA	NA	NA	NA	NA	NA
		NRC - DS3 Local Channel - Facility Termination - Add'l	ULDF3	NA	NA	$426.40	NA	NA	NA	NA	NA	NA
		NRC - Electronic Svc Order, per LSR	SOMEC	NA	NA	$3.50	NA	NA	NA	NA	NA	NA
		NRC - DS3 Local Channel - Incremental Charge--Manual Svc Order - 1st	SOMAN	NA	NA	$37.55	NA	NA	NA	NA	NA	NA
		NRC - DS3 Local Channel - Incremental Charge--Manual Svc Order - Add'l	SOMAN	NA	NA	$37.55	NA	NA	NA	NA	NA	NA
		NRC - DS3 Local Channel - Incremental Charge--Manual Svc Order - Disconnect - 1	SOMAN	NA	NA	$18.03	NA	NA	NA	NA	NA	NA
		NRC - DS3 Local Channel - Incremental Charge--Manual Svc Order - Disconnec - A	SOMAN	NA	NA	$18.03	NA	NA	NA	NA	NA	NA
		NRC-All Existing Combination "Switch As Is" Conversion Charge (Note 6)										
		NRC-DS3 COMBINATION - "Switch As Is" Conversion Charge - 1st	UNCCC	$54.03	$32.75	$71.04	$54.09	$54.23	$54.09	$54.00	$54.26	$54.13
		NRC-DS3 COMBINATION - "Switch As Is" Conversion Charge - Add'l	UNCCC	$32.11	$32.75	$39.60	$32.16	$32.24	$32.16	$32.10	$32.25	$32.17
		NRC- DS3 COMBINATION - "Switch As Is" Conversion Charge - Disconnect - 1st	UNCCC	$0.00	$16.77	$0.00	$0.00	$0.00	$0.00	$0.00	$0.00	$0.00
		NRC- DS3 COMBINATION - "Switch As Is" Conversion Charge - Disconnect - Add'l	UNCCC	$0.00	$16.77	$0.00	$0.00	$0.00	$0.00	$0.00	$0.00	$0.00
		Local Channel - Dedicated - STS-1										
		STS-1 Local Channel - per mile per month	1L5NC	$8.44	$9.32	$6.92	$34.00	$8.77	$38.98	NA	$12.08	$25.11
		STS-1 Local Channel - Facility Termination per month	ULDFS	$525.40	$569.67	$517.56	$635.09	$558.00	$531.39	$512.00	$481.14	$615.65
		NRC - Ordinarily Combined in GA (Note 5)										
		NRC - STS-1 Local Channel Facility Termination - 1st	ULDFS	NA	NA	$761.81	NA	NA	NA	NA	NA	NA
		NRC - STS-1 Local Channel - Facility Termination - Add'l	ULDFS	NA	NA	$545.54	NA	NA	NA	NA	NA	NA
		NRC - Electronic Svc Order, per LSR	SOMEC	NA	NA	$3.50	NA	NA	NA	NA	NA	NA
		NRC - STS-1 Local Channel - Incremental Charge--Manual Svc Order - 1st	SOMAN	NA	NA	$37.55	NA	NA	NA	NA	NA	NA
		NRC - STS-1 Local Channel - Incremental Charge--Manual Svc Order - Add'l	SOMAN	NA	NA	$37.55	NA	NA	NA	NA	NA	NA
		NRC - STS-1 Local Channel - Incremental Charge--Manual Svc Order - Disconnect	SOMAN	NA	NA	$18.03	NA	NA	NA	NA	NA	NA
		NRC - STS-1 Local Channel - Incremental Charge--Manual Svc Order - Disconnec -	SOMAN	NA	NA	$18.03	NA	NA	NA	NA	NA	NA
		NRC-All Existing Combination "Switch As Is" Conversion Charge (Note 6)										
		NRC-STS-1 COMBINATION - "Switch As Is" Conversion Charge - 1st	UNCCC	$54.03	$32.75	$58.43	$54.09	$54.23	$54.09	$54.00	$54.26	$54.13

		New EEL rates are the sum of the individual UNE network elements (interoffice transport and loop [channelization if applicable].									
		NRC-STS-1 COMBINATION - "Switch As Is" Conversion Charge - Add'l	UNCCC	$32.11	$32.75	$26.99	$32.16	$32.24	$32.16	$32.10	$32.25	$32.17
		NRC- STS-1 COMBINATION - "Switch As Is" Conversion Charge - Disconnect - 1st	UNCCC	$0.00	$16.77	$12.61	$0.00	$0.00	$0.00	$0.00	$0.00	$0.00
		NRC- STS-1 COMBINATION - "Switch As Is" Conversion Charge - Disconnect - Add'l	UNCCC	$0.00	$16.77	$12.61	$0.00	$0.00	$0.00	$0.00	$0.00	$0.00
		Local Channel - OC3										
		Local Channel - OC3 - per Mile	1L5NC	$8.23	$7.83	$6.75	$33.15	$29.58	$41.27	$24.69	$11.78	$23.16
		Local Channel - OC3 - per Facility Termination	TBA	$691.33	$940.35	$630.21	$713.29	$753.65	$689.68	$611.36	$701.71	$620.20
		NRC - Ordinarily Combined in GA (Note 5)										
		NRC - OC3 - Facility Termination - 1st	TBA	NA	NA	$947.69	NA	NA	NA	NA	NA	NA
		NRC - OC3 - Facility Termination - Add'l	TBA	NA	NA	$413.00	NA	NA	NA	NA	NA	NA
		NRC - OC3 - Facility Termination - Disconnect - 1st	TBA	NA	NA	$122.31	NA	NA	NA	NA	NA	NA
		NRC - OC3 - Facility Termination - Disconnect - Add'l	TBA	NA	NA	$119.14	NA	NA	NA	NA	NA	NA
		NRC - Electronic Svc Order, per LSR	SOMEC	NA	NA	$3.50	NA	NA	NA	NA	NA	NA
		NRC - OC3 - Incremental Charge--Manual Svc Order - 1st	SOMAN	NA	NA	$37.55	NA	NA	NA	NA	NA	NA
		NRC - OC3 - Incremental Charge--Manual Svc Order - Add'l	SOMAN	NA	NA	$37.55	NA	NA	NA	NA	NA	NA
		NRC - OC3 -Incremental Cost - Manual Svc. Order vs. Elect-Disconnect-1st	SOMAN	NA	NA	$18.03	NA	NA	NA	NA	NA	NA
		NRC - OC3 -Incremental Cost - Manual Svc. Order vs. Elect-Disconnect-Add'l	SOMAN	NA	NA	$18.03	NA	NA	NA	NA	NA	NA
		NRC-All Existing Combination "Switch As Is" Conversion Charge (Note 6)										
		NRC-OC-3 COMBINATION - "Switch As Is" Conversion Charge - 1st	UNCCC	$54.03	$32.75	$58.43	$54.09	$54.23	$54.09	$54.00	$54.26	$54.13
		NRC-OC-3 COMBINATION - "Switch As Is" Conversion Charge - Add'l	UNCCC	$32.11	$32.75	$26.99	$32.16	$32.24	$32.16	$32.10	$32.25	$32.17
		NRC- OC-3 COMBINATION - "Switch As Is" Conversion Charge - Disconnect - 1st	UNCCC	$0.00	$16.77	$12.61	$0.00	$0.00	$0.00	$0.00	$0.00	$0.00
		NRC- OC-3 COMBINATION - "Switch As Is" Conversion Charge - Disconnect - Add'l	UNCCC	$0.00	$16.77	$12.61	$0.00	$0.00	$0.00	$0.00	$0.00	$0.00
		Local Channel - OC12	USOC	AL	FL	GA	KY	LA	MS	NC	SC	TN
		Local Channel - OC12 - per Mile	1L5NC	$10.13	$11.18	$8.31	$40.80	$36.40	$50.79	$30.38	$14.50	$28.51
		Local Channel - OC12 - per Facility Termination	TBA	$2,557	$2,753	$2,109.00	$2,457	$2,571	$2,371	$2,122	$2,663	$2,079
		NRC - Ordinarily Combined in GA (Note 5)										
		NRC - OC12 - Facility Termination - 1st	TBA	NA	NA	$1,162.00	NA	NA	NA	NA	NA	NA
		NRC - OC12 - Facility Termination - Add'l	TBA	NA	NA	$413.00	NA	NA	NA	NA	NA	NA
		NRC - OC12 - Facility Termination - Disconnect - 1st	TBA	NA	NA	$122.31	NA	NA	NA	NA	NA	NA
		NRC - OC12 - Facility Termination - Disconnect - Add'l	TBA	NA	NA	$119.14	NA	NA	NA	NA	NA	NA
		NRC - Electronic Svc Order, per LSR	SOMEC	NA	NA	$3.50	NA	NA	NA	NA	NA	NA
		NRC -OC12 - Incremental Charge - Manual Svc Order - 1st	SOMAN	NA	NA	$37.55	NA	NA	NA	NA	NA	NA
		NRC - OC12 - Incremental Charge - Manual Svc Order - Add'l	SOMAN	NA	NA	$37.55	NA	NA	NA	NA	NA	NA
		NRC - OC12 - Incremental Cost-Manual Svc. Order vs. Elect-Disconnect-1st	SOMAN	NA	NA	$18.03	NA	NA	NA	NA	NA	NA
		NRC - OC12 - Incremental Cost-Manual Svc. Order vs. Elect-Disconnect-Add'l	SOMAN	NA	NA	$18.03	NA	NA	NA	NA	NA	NA
		NRC-All Existing Combination "Switch As Is" Conversion Charge (Note 6)										
		NRC-OC-12 COMBINATION - "Switch As Is" Conversion Charge - 1st	UNCCC	$54.03	$32.75	$58.43	$54.09	$54.23	$54.09	$54.00	$54.26	$54.13
		NRC-OC-12 COMBINATION - "Switch As Is" Conversion Charge - Add'l	UNCCC	$32.11	$32.75	$26.99	$32.16	$32.24	$32.16	$32.10	$32.25	$32.17
		NRC- OC-12 COMBINATION - "Switch As Is" Conversion Charge - Disconnect - 1st	UNCCC	$0.00	$16.77	$12.61	$0.00	$0.00	$0.00	$0.00	$0.00	$0.00
		NRC- OC-12 COMBINATION - "Switch As Is" Conversion Charge - Disconnect - Add	UNCCC	$0.00	$16.77	$12.61	$0.00	$0.00	$0.00	$0.00	$0.00	$0.00
		Local Channel - OC48	USOC	AL	FL	GA	KY	LA	MS	NC	SC	TN
		Local Channel - OC48 - per Mile	1L5NC	$33.22	$36.67	$27.25	$133.84	$119.40	$166.59	$120.02	$47.57	$93.50
		Local Channel - OC48 - per Facility Termination	TBA	$1,713	$1,944	$1,598.00	$2,129	$2,268	$1,753	$1,677	$1,733	$1,832
		Local Channel - OC12 interface on OC48 Facility	TBA	$736.71	$586.28	$594.80	$725.77	$723.29	$667.00	$582.66	$773.40	$570.54
		NRC - Ordinarily Combined in GA (Note 5)										
		NRC - OC48 - Facility Termination - 1st	TBA	NA	NA	$1,162.00	NA	NA	NA	NA	NA	NA
		NRC - OC48 - Facility Termination - Add'l	TBA	NA	NA	$413.00	NA	NA	NA	NA	NA	NA
		NRC - OC48 - Interface OC12 on OC48 - 1st	TBA	NA	NA	$539.36	NA	NA	NA	NA	NA	NA
		NRC - OC48 - Interface OC12 on OC48 - Add'l	TBA	NA	NA	$317.38	NA	NA	NA	NA	NA	NA
		NRC - OC48 - Facility Termination - Disconnect - 1st	TBA	NA	NA	$122.31	NA	NA	NA	NA	NA	NA
		NRC - OC48 - Facility Termination - Disconnect - Add'l	TBA	NA	NA	$119.14	NA	NA	NA	NA	NA	NA
		NRC - OC48- Interface OC12 on OC48 - Disconnect - 1st	TBA	NA	NA	$122.31	NA	NA	NA	NA	NA	NA
		NRC - OC48 - Interface OC12 on OC48 - Disconnect - Add'l	TBA	NA	NA	$119.14	NA	NA	NA	NA	NA	NA

New EEL rates are the sum of the individual UNE network elements (interoffice transport and loop [channelization if applicable].											
NRC - Electronic Svc Order, per LSR	SOMEC	NA	NA	$3.50	NA	NA	NA	NA	NA	NA
NRC - OC48 - Facility Termination-Manual Svc Order vs Electronic-Disconnect-1st	SOMAN	NA	NA	$18.03	NA	NA	NA	NA	NA	NA
NRC - OC48 - Facility Termination-Manual Svc Order vs Electronic-Disconnect-Add'l	SOMAN	NA	NA	$18.03	NA	NA	NA	NA	NA	NA
NRC - OC48 - Interface - Manual Svc Order vs Electronic-Disconnect-1st	SOMAN	NA	NA	$18.03	NA	NA	NA	NA	NA	NA
NRC - OC48 - Interface - Manual Svc Order vs Electronic-Disconnect-Add'l	SOMAN	NA	NA	$18.03	NA	NA	NA	NA	NA	NA
NRC - OC48 - Incremental Charge--Manual Svc Order-1st	SOMAN	NA	NA	$37.55	NA	NA	NA	NA	NA	NA
NRC - OC-48 - Incremental Charge--Manual Svc Order-Add'l	SOMAN	NA	NA	$37.55	NA	NA	NA	NA	NA	NA
NRC - OC48 - Interface OC12 on OC48 - Incremental Charge--Manual Svc Order-1st	SOMAN	NA	NA	$37.55	NA	NA	NA	NA	NA	NA
NRC - OC48 - Interface OC12 on OC48 - Incremental Charge--Manual Svc Order-Ad	SOMAN	NA	NA	$37.55	NA	NA	NA	NA	NA	NA
NRC-All Existing Combination "Switch As Is" Conversion Charge (Note 6)										
NRC-OC-48 COMBINATION - "Switch As Is" Conversion Charge - 1st	UNCCC	$54.03	$32.75	$58.43	$54.09	$54.23	$54.09	$54.00	$54.26	$54.13
NRC-OC-48 COMBINATION - "Switch As Is" Conversion Charge - Add'l	UNCCC	$32.11	$32.75	$26.99	$32.16	$32.24	$32.16	$32.10	$32.25	$32.17
NRC- OC-48 COMBINATION - "Switch As Is" Conversion Charge - Disconnect - 1st	UNCCC	$0.00	$16.77	$12.61	$0.00	$0.00	$0.00	$0.00	$0.00	$0.00
NRC- OC-48 COMBINATION - "Switch As Is" Conversion Charge - Disconnect - Ad	UNCCC	$0.00	$16.77	$12.61	$0.00	$0.00	$0.00	$0.00	$0.00	$0.00
Interoffice Channels:										
Interoffice Channel - Dedicated - 2-wire VG										
Interoffice Channel - Dedicated 2-wire VG - per mile per month	1L5XX	$0.0339	$0.0100	$0.0222	$0.0301	$0.0384	$0.0323	$0.0282	$0.0373	$0.0173
Interoffice Channel - Dedicated 2-wire VG - Facility Termination per month	U1TV2	$18.49	$26.72	$17.07	$27.66	$19.10	$21.33	$18.01	$21.42	$18.33
NRC - Ordinarily Combined in GA (Note 5)										
NRC - 2-wire VG Interoffice Channel - Facility Termination - 1st	U1TV2	NA	NA	$79.61	NA	NA	NA	NA	NA	NA
NRC - 2-wire VG Interoffice Channel - Facility Termination - Add'l	U1TV2	NA	NA	$36.08	NA	NA	NA	NA	NA	NA
NRC - Electronic Svc Order, per LSR	SOMEC	NA	NA	$3.50	NA	NA	NA	NA	NA	NA
NRC - 2-wire VG Interoffice Channel - Incremental Charge--Manual Svc Order - 1st	SOMAN	NA	NA	$18.94	NA	NA	NA	NA	NA	NA
NRC - 2-wire VG Interoffice Channel - Incremental Charge--Manual Svc Order - Add'l	SOMAN	NA	NA	$18.94	NA	NA	NA	NA	NA	NA
NRC - 2-wire VG Interoffice Channel - Incremental Charge--Manual Svc Order - Disc	SOMAN	NA	NA	NA	NA	NA	NA	NA	NA	NA
NRC - 2-wire VG Interoffice Channel - Incremental Charge--Manual Svc Order - Disc	SOMAN	NA	NA	NA	NA	NA	NA	NA	NA	NA
NRC-All Existing Combination "Switch As Is" Conversion Charge (Note 6)										
NRC-2/4-WIRE COMBINATION - "Switch As Is" Conversion Charge - 1st	UNCCC	$54.03	$32.75	$58.43	$54.09	$54.23	$54.09	$54.00	$54.26	$54.13
NRC-2/4-WIRE COMBINATION - "Switch As Is" Conversion Charge - Add'l	UNCCC	$32.11	$32.75	$26.99	$32.16	$32.24	$32.16	$32.10	$32.25	$32.17
NRC- 2/4-WIRE COMBINATION - "Switch As Is" Conversion Charge - Disconnect - 1st	UNCCC	$0.00	$16.77	$12.61	$0.00	$0.00	$0.00	$0.00	$0.00	$0.00
NRC- 2/4-WIRE COMBINATION - "Switch As Is" Conversion Charge - Disconnect - Add'l	UNCCC	$0.00	$16.77	$12.61	$0.00	$0.00	$0.00	$0.00	$0.00	$0.00
Interoffice Channel - Dedicated - 4-wire VG										
Interoffice Channel - Dedicated 4-wire VG - per mile per month	1L5XX	NA	$0.0100	NA	NA	NA	NA	NA	NA	NA
Interoffice Channel - Dedicated 4-wire VG - Facility Termination per month	U1TV4	NA	$23.82	NA	NA	NA	NA	NA	NA	NA
NRC - Ordinarily Combined in GA (Note 5)										
NRC - 4-wire VG Interoffice Channel - Facility Termination - 1st	U1TV4	NA	NA	NA	NA	NA	NA	NA	NA	NA
NRC - 4-wire VG Interoffice Channel - Facility Termination - Add'l	U1TV4	NA	NA	NA	NA	NA	NA	NA	NA	NA
NRC - Electronic Svc Order, per LSR	SOMEC	NA	NA	NA	NA	NA	NA	NA	NA	NA
NRC - 4-wire VG Interoffice Channel - Incremental Charge--Manual Svc Order - 1st	SOMAN	NA	NA	NA	NA	NA	NA	NA	NA	NA
NRC - 4-wire VG Interoffice Channel - Incremental Charge--Manual Svc Order - Add'l	SOMAN	NA	NA	NA	NA	NA	NA	NA	NA	NA
NRC - 4-wire VG Interoffice Channel - Incremental Charge--Manual Svc Order - Disc	SOMAN	NA	NA	NA	NA	NA	NA	NA	NA	NA
NRC - 4-wire VG Interoffice Channel - Incremental Charge--Manual Svc Order - Disc	SOMAN	NA	NA	NA	NA	NA	NA	NA	NA	NA
NRC-All Existing Combination "Switch As Is" Conversion Charge (Note 6)										
NRC-2/4-WIRE COMBINATION - "Switch As Is" Conversion Charge - 1st	UNCCC	$54.03	$32.75	$58.43	$54.09	$54.23	$54.09	$54.00	$54.26	$54.13
NRC-2/4-WIRE COMBINATION - "Switch As Is" Conversion Charge - Add'l	UNCCC	$32.11	$32.75	$26.99	$32.16	$32.24	$32.16	$32.10	$32.25	$32.17
NRC- 2/4-WIRE COMBINATION - "Switch As Is" Conversion Charge - Disconnect - 1st	UNCCC	$0.00	$16.77	$12.61	$0.00	$0.00	$0.00	$0.00	$0.00	$0.00
NRC- 2/4-WIRE COMBINATION - "Switch As Is" Conversion Charge - Disconnect - Add'l	UNCCC	$0.00	$16.77	$12.61	$0.00	$0.00	$0.00	$0.00	$0.00	$0.00
Interoffice Channel - Dedicated - DS0 - 56kbps										
Interoffice Channel - Dedicated - DS0 - 56kbps - per mile per month	1L5XX	$0.0339	$0.0100	$0.0222	$0.0301	$0.0384	$0.0323	$0.0282	$0.0373	$0.1730
Interoffice Channel - Dedicated - DS0 - 56 kbps - Facility Termination per month	U1TD5	$17.81	$19.46	$16.45	$26.95	$18.37	$20.64	$17.40	$20.71	$17.74
NRC - Ordinarily Combined in GA (Note 5)										
NRC - 4-wire 56kbps Interoffice Channel - Facility Termination - 1st	U1TD5	NA	NA	$79.61	NA	NA	NA	NA	NA	NA

		New EEL rates are the sum of the individual UNE network elements (interoffice transport and loop [channelization if applicable].									
		NRC - 4-wire 56 kbps Interoffice Channel - Facility Termination - Add'l	U1TD5	NA	NA	$36.08	NA	NA	NA	NA	NA	NA
		NRC - Electronic Svc Order, per LSR	SOMEC	NA	NA	$3.50	NA	NA	NA	NA	NA	NA
		NRC - 4-wire 56 kbps Interoffice Channel - Incremental Charge--Manual Svc Order -	SOMAN	NA	NA	$18.94	NA	NA	NA	NA	NA	NA
		NRC - 4-wire 56 kbps Interoffice Channel - Incremental Charge--Manual Svc Order -	SOMAN	NA	NA	$18.94	NA	NA	NA	NA	NA	NA
		NRC - 4-wire 56 kbps Interoffice Channel - Incremental Charge--Manual Svc Order -	SOMAN	NA	NA	NA	NA	NA	NA	NA	NA	NA
		NRC - 4-wire 56 kbps Interoffice Channel - Incremental Charge--Manual Svc Order -	SOMAN	NA	NA	NA	NA	NA	NA	NA	NA	NA
		NRC-All Existing Combination "Switch As Is" Conversion Charge (Note 6)										
		NRC-2/4-WIRE COMBINATION - "Switch As Is" Conversion Charge - 1st	UNCCC	$54.03	$32.75	$58.43	$54.09	$54.23	$54.09	$54.00	$54.26	$54.13
		NRC-2/4-WIRE COMBINATION - "Switch As Is" Conversion Charge - Add'l	UNCCC	$32.11	$32.75	$26.99	$32.16	$32.24	$32.16	$32.10	$32.25	$32.17
		NRC- 2/4-WIRE COMBINATION - "Switch As Is" Conversion Charge - Disconnect - 1st	UNCCC	$0.00	$16.77	$12.61	$0.00	$0.00	$0.00	$0.00	$0.00	$0.00
		NRC- 2/4-WIRE COMBINATION - "Switch As Is" Conversion Charge - Disconnect - Add'l	UNCCC	$0.00	$16.77	$12.61	$0.00	$0.00	$0.00	$0.00	$0.00	$0.00
		Interoffice Channel - Dedicated - DS0 - 64kbps										
		Interoffice Channel - Dedicated - DS0 - 64kbps - per mile per month	1L5XX	$0.0339	$0.0100	$0.0222	$0.0301	$0.0384	$0.0323	$0.0282	$0.0373	$0.1730
		Interoffice Channel - Dedicated - DS0 - 64 kbps - Facility Termination per month	U1TD6	$17.81	$19.46	$16.45	$26.95	$18.37	$20.64	$17.40	$20.71	$17.74
		NRC - Ordinarily Combined in GA (Note 5)										
		NRC - 4-wire 64kbps Interoffice Channel - Facility Termination - 1st	U1TD6	NA	NA	$79.61	NA	NA	NA	NA	NA	NA
		NRC - 4-wire 64 kbps Interoffice Channel - Facility Termination - Add'l	U1TD6	NA	NA	$36.08	NA	NA	NA	NA	NA	NA
		NRC - Electronic Svc Order, per LSR	SOMEC	NA	NA	$3.50	NA	NA	NA	NA	NA	NA
		NRC - 4-wire 64 kbps Interoffice Channel - Incremental Charge--Manual Svc Order -	SOMAN	NA	NA	$18.94	NA	NA	NA	NA	NA	NA
		NRC - 4-wire 64 kbps Interoffice Channel - Incremental Charge--Manual Svc Order -	SOMAN	NA	NA	$18.94	NA	NA	NA	NA	NA	NA
		NRC - 4-wire 64 kbps Interoffice Channel - Incremental Charge--Manual Svc Order -	SOMAN	NA	NA	NA	NA	NA	NA	NA	NA	NA
		NRC - 4-wire 64 kbps Interoffice Channel - Incremental Charge--Manual Svc Order -	SOMAN	NA	NA	NA	NA	NA	NA	NA	NA	NA
		NRC-All Existing Combination "Switch As Is" Conversion Charge (Note 6)										
		NRC-2/4-WIRE COMBINATION - "Switch As Is" Conversion Charge - 1st	UNCCC	$54.03	$32.75	$58.43	$54.09	$54.23	$54.09	$54.00	$54.26	$54.13
		NRC-2/4-WIRE COMBINATION - "Switch As Is" Conversion Charge - Add'l	UNCCC	$32.11	$32.75	$26.99	$32.16	$32.24	$32.16	$32.10	$32.25	$32.17
		NRC- 2/4-WIRE COMBINATION - "Switch As Is" Conversion Charge - Disconnect - 1st	UNCCC	$0.00	$16.77	$12.61	$0.00	$0.00	$0.00	$0.00	$0.00	$0.00
		NRC- 2/4-WIRE COMBINATION - "Switch As Is" Conversion Charge - Disconnect - Add'l	UNCCC	$0.00	$16.77	$12.61	$0.00	$0.00	$0.00	$0.00	$0.00	$0.00
		Interoffice Channel - Dedicated - DS1										
		Interoffice Channel - Dedicated - DS1 - per mile per month	1L5XX	$0.6920	$0.6013	$0.4523	$0.4500	$0.7831	$0.6598	$0.0783	$0.7598	$0.3525
		Interoffice Channel - Dedicated - DS1 - Facility Termination per month	U1TF1	$79.69	$99.79	$78.47	$55.05	$93.40	$74.40	$71.29	$94.98	$75.83
		NRC - Ordinarily Combined in GA (Note 5)										
		NRC - DS1 Interoffice Channel - Facility Termination - 1st	U1TF1	NA	NA	$169.57	NA	NA	NA	NA	NA	NA
		NRC - DS1 Interoffice Channel - Facility Termination - Add'l	U1TF1	NA	NA	$112.77	NA	NA	NA	NA	NA	NA
		NRC - Electronic Svc Order, per LSR	SOMEC	NA	NA	$3.50	NA	NA	NA	NA	NA	NA
		NRC - DS1 Interoffice Channel - Incremental Charge--Manual Svc Order - 1st	SOMAN	NA	NA	$23.98	NA	NA	NA	NA	NA	NA
		NRC - DS1 Interoffice Channel - Incremental Charge--Manual Svc Order - Add'l	SOMAN	NA	NA	$17.77	NA	NA	NA	NA	NA	NA
		NRC - DS1 Interoffice Channel - Incremental Charge--Manual Svc Order - Disconne	SOMAN	NA	NA	$15.13	NA	NA	NA	NA	NA	NA
		NRC - DS1 Interoffice Channel - Incremental Charge--Manual Svc Order - Disconne	SOMAN	NA	NA	$7.02	NA	NA	NA	NA	NA	NA
		NRC-All Existing Combination "Switch As Is" Conversion Charge (Note 6)										
		NRC-DS1 COMBINATION - "Switch As Is" Conversion Charge - 1st	UNCCC	$54.03	$32.75	$58.43	$54.09	$54.23	$54.09	$54.00	$54.26	$54.13
		NRC-DS1 COMBINATION - "Switch As Is" Conversion Charge - Add'l	UNCCC	$32.11	$32.75	$26.99	$32.16	$32.24	$32.16	$32.10	$32.25	$32.17
		NRC- DS1 COMBINATION - "Switch As Is" Conversion Charge - Disconnect - 1st	UNCCC	$0.00	$16.77	$12.61	$0.00	$0.00	$0.00	$0.00	$0.00	$0.00
		NRC- DS1 COMBINATION - "Switch As Is" Conversion Charge - Disconnect - Add'l	UNCCC	$0.00	$16.77	$12.61	$0.00	$0.00	$0.00	$0.00	$0.00	$0.00
		Interoffice Channel - Dedicated - DS3 - per mile per month										
		Interoffice Channel - Dedicated - DS3 - per mile per month	1L5XX	$4.98	$4.25	$6.46	$12.06	$16.15	$13.48	$12.98	$19.14	$6.88
		Interoffice Channel - Dedicated - DS3 - Facility Termination per month	U1TF3	$898.15	$1,130	$717.60	$1,112.02	$1,131.09	$686.84	$720.38	$904.49	$840.61
		NRC - Ordinarily Combined in GA (Note 5)										
		NRC - DS3 Interoffice Channel - Facility Termination - 1st	U1TF3	NA	NA	$578.97	NA	NA	NA	NA	NA	NA
		NRC - DS3 Interoffice Channel - Facility Termination - Add'l	U1TF3	NA	NA	$312.17	NA	NA	NA	NA	NA	NA
		NRC - Electronic Svc Order, per LSR	SOMEC	NA	NA	$3.50	NA	NA	NA	NA	NA	NA
		NRC - DS3 Interoffice Channel - Incremental Charge--Manual Svc Order - 1st	SOMAN	NA	NA	$51.27	NA	NA	NA	NA	NA	NA
		NRC - DS3 Interoffice Channel - Incremental Charge--Manual Svc Order - Add'l	SOMAN	NA	NA	$38.87	NA	NA	NA	NA	NA	NA

		New EEL rates are the sum of the individual UNE network elements (interoffice transport and loop [channelization if applicable].									
		NRC - DS3 Interoffice Channel - Incremental Charge--Manual Svc Order - Disconne	SOMAN	NA	NA	$30.42	NA	NA	NA	NA	NA	NA
		NRC - DS3 Interoffice Channel - Incremental Charge--Manual Svc Order - Disconne	SOMAN	NA	NA	$18.76	NA	NA	NA	NA	NA	NA
		NRC-All Existing Combination "Switch As Is" Conversion Charge (Note 6)										
		NRC-DS3 COMBINATION - "Switch As Is" Conversion Charge - 1st	UNCCC	$54.03	$32.75	$58.43	$54.09	$54.23	$54.09	$54.00	$54.26	$54.13
		NRC-DS3 COMBINATION - "Switch As Is" Conversion Charge - Add'l	UNCCC	$32.11	$32.75	$26.99	$32.16	$32.24	$32.16	$32.10	$32.25	$32.17
		NRC- DS3 COMBINATION - "Switch As Is" Conversion Charge - Disconnect - 1st	UNCCC	$0.00	$16.77	$12.61	$0.00	$0.00	$0.00	$0.00	$0.00	$0.00
		NRC- DS3 COMBINATION - "Switch As Is" Conversion Charge - Disconnect - Add'l	UNCCC	$0.00	$16.77	$12.61	$0.00	$0.00	$0.00	$0.00	$0.00	$0.00
		Interoffice Channel - Dedicated - STS-1										
		Interoffice Channel - Dedicated - STS-1 - per mile per month	1L5XX	$4.98	$9.32	$2.72	$12.62	$14.04	$15.02	$12.98	$8.13	$5.89
		Interoffice Channel - Dedicated - STS-1 - Facility Termination per month	U1TFS	$898.15	$569.67	$788.00	$1,204	$1,101	$744.38	$720.38	$967.70	$760.20
		NRC - Ordinarily Combined in GA (Note 5)										
		NRC - STS-1 Interoffice Channel - Facility Termination - 1st	U1TFS	NA	NA	$587.08	NA	NA	NA	NA	NA	NA
		NRC - STS-1 Interoffice Channel - Facility Termination - Add'l	U1TFS	NA	NA	$238.28	NA	NA	NA	NA	NA	NA
		NRC - Electronic Svc Order, per LSR	SOMEC	NA	NA	$3.50	NA	NA	NA	NA	NA	NA
		NRC - STS-1 Interoffice Channel - Incremental Charge--Manual Svc Order - 1st	SOMAN	NA	NA	$61.19	NA	NA	NA	NA	NA	NA
		NRC - STS-1 Interoffice Channel - Incremental Charge--Manual Svc Order - Add'l	SOMAN	NA	NA	$61.19	NA	NA	NA	NA	NA	NA
		NRC - STS-1 Interoffice Channel - Incremental Charge--Manual Svc Order - Disconr	SOMAN	NA	NA	$3.17	NA	NA	NA	NA	NA	NA
		NRC - STS-1 Interoffice Channel - Incremental Charge--Manual Svc Order - Disconr	SOMAN	NA	NA	$3.17	NA	NA	NA	NA	NA	NA
		NRC-All Existing Combination "Switch As Is" Conversion Charge (Note 6)										
		NRC-STS-1 COMBINATION - "Switch As Is" Conversion Charge - 1st	UNCCC	$54.03	$32.75	$58.43	$54.09	$54.23	$54.09	$54.00	$54.26	$54.13
		NRC-STS-1 COMBINATION - "Switch As Is" Conversion Charge - Add'l	UNCCC	$32.11	$32.75	$26.99	$32.16	$32.24	$32.16	$32.10	$32.25	$32.17
		NRC- STS-1 COMBINATION - "Switch As Is" Conversion Charge - Disconnect - 1st	UNCCC	$0.00	$16.77	$12.61	$0.00	$0.00	$0.00	$0.00	$0.00	$0.00
		NRC- STS-1 COMBINATION - "Switch As Is" Conversion Charge - Disconnect - Add'l	UNCCC	$0.00	$16.77	$12.61	$0.00	$0.00	$0.00	$0.00	$0.00	$0.00
		Interoffice Channel - OC3										
		Interoffice Channel - OC3 - per Mile	1L5XX	$7.35	$8.38	$4.37	$27.97	$23.89	$18.35	$14.10	$9.75	$13.45
		Interoffice Channel - OC3 - per Facility Termination	TBA	$2,475	$3,043	$2,187.00	$3,390	$2,990	$1,892.00	$2,071	$2,802	$2,124
		NRC - Ordinarily Combined in GA (Note 5)										
		NRC - OC3 - Facility Termination - 1st	TBA	NA	NA	$947.69	NA	NA	NA	NA	NA	NA
		NRC - OC3 - Facility Termination - Add'l	TBA	NA	NA	$413.00	NA	NA	NA	NA	NA	NA
		NRC - OC3 - Facility Termination - Disconnect - 1st	TBA	NA	NA	$122.31	NA	NA	NA	NA	NA	NA
		NRC - OC3 - Facility Termination - Disconnect - Add'l	TBA	NA	NA	$119.14	NA	NA	NA	NA	NA	NA
		NRC - Electronic Svc Order, per LSR	SOMEC	NA	NA	$3.50	NA	NA	NA	NA	NA	NA
		NRC - OC3 - Incremental Charge--Manual Svc Order - 1st	SOMAN	NA	NA	$37.55	NA	NA	NA	NA	NA	NA
		NRC - OC3 - Incremental Charge--Manual Svc Order - Add'l	SOMAN	NA	NA	$37.55	NA	NA	NA	NA	NA	NA
		NRC - OC3 -Incremental Cost - Manual Svc. Order vs. Elect-Disconnect-1st	SOMAN	NA	NA	$18.03	NA	NA	NA	NA	NA	NA
		NRC - OC3 -Incremental Cost - Manual Svc. Order vs. Elect-Disconnect-Add'l	SOMAN	NA	NA	$18.03	NA	NA	NA	NA	NA	NA
		NRC-All Existing Combination "Switch As Is" Conversion Charge (Note 6)										
		NRC-OC-3 COMBINATION - "Switch As Is" Conversion Charge - 1st	UNCCC	$54.03	$32.75	$58.43	$54.09	$54.23	$54.09	$54.00	$54.26	$54.13
		NRC-OC-3 COMBINATION - "Switch As Is" Conversion Charge - Add'l	UNCCC	$32.11	$32.75	$26.99	$32.16	$32.24	$32.16	$32.10	$32.25	$32.17
		NRC- OC-3 COMBINATION - "Switch As Is" Conversion Charge - Disconnect - 1st	UNCCC	$0.00	$16.77	$12.61	$0.00	$0.00	$0.00	$0.00	$0.00	$0.00
		NRC- OC-3 COMBINATION - "Switch As Is" Conversion Charge - Disconnect - Add'l	UNCCC	$0.00	$16.77	$12.61	$0.00	$0.00	$0.00	$0.00	$0.00	$0.00
		Interoffice Channel - OC12										
		Interoffice Channel - OC12 - per Mile	1L5XX	$19.26	$26.91	$15.05	$84.88	$74.44	$60.42	$30.38	$32.52	$49.80
		Interoffice Channel - OC12 - per Facility Termination	TBA	$9,763	$11,685	$8,202.00	$12,344	$11,517	$7,182.00	$7,676.00	$11,132	$8,015
		NRC - Ordinarily Combined in GA (Note 5)										
		NRC - OC12 - Facility Termination - 1st	TBA	NA	NA	$1,034.00	NA	NA	NA	NA	NA	NA
		NRC - OC12 - Facility Termination - Add'l	TBA	NA	NA	$317.38	NA	NA	NA	NA	NA	NA
		NRC - OC12 - Facility Termination - Disconnect - 1st	TBA	NA	NA	$122.31	NA	NA	NA	NA	NA	NA
		NRC - OC12 - Facility Termination - Disconnect - Add'l	TBA	NA	NA	$119.14	NA	NA	NA	NA	NA	NA
		NRC - Electronic Svc Order, per LSR	SOMEC	NA	NA	$3.50	NA	NA	NA	NA	NA	NA
		NRC -OC12 - Incremental Charge - Manual Svc Order - 1st	SOMAN	NA	NA	$37.55	NA	NA	NA	NA	NA	NA
		NRC - OC12 - Incremental Charge - Manual Svc Order - Add'l	SOMAN	NA	NA	$37.55	NA	NA	NA	NA	NA	NA

		New EEL rates are the sum of the individual UNE network elements (interoffice transport and loop [channelization if applicable].									
		NRC - OC12 - Incremental Cost-Manual Svc. Order vs. Elect-Disconnect-1st	SOMAN	NA	NA	$18.03	NA	NA	NA	NA	NA	NA
		NRC - OC12 - Incremental Cost-Manual Svc. Order vs. Elect-Disconnect-Add'l	SOMAN	NA	NA	$18.03	NA	NA	NA	NA	NA	NA
		NRC-All Existing Combination "Switch As Is" Conversion Charge (Note 6)										
		NRC-OC-12 COMBINATION - "Switch As Is" Conversion Charge - 1st	UNCCC	$54.03	$32.75	$58.43	$54.09	$54.23	$54.09	$54.00	$54.26	$54.13
		NRC-OC-12 COMBINATION - "Switch As Is" Conversion Charge - Add'l	UNCCC	$32.11	$32.75	$26.99	$32.16	$32.24	$32.16	$32.10	$32.25	$32.17
		NRC- OC-12 COMBINATION - "Switch As Is" Conversion Charge - Disconnect - 1st	UNCCC	$0.00	$16.77	$12.61	$0.00	$0.00	$0.00	$0.00	$0.00	$0.00
		NRC- OC-12 COMBINATION - "Switch As Is" Conversion Charge - Disconnect - Add	UNCCC	$0.00	$16.77	$12.61	$0.00	$0.00	$0.00	$0.00	$0.00	$0.00
		Interoffice Channel - OC48										
		Interoffice Channel - OC48 - per Mile	1L5XX	$30.65	$34.66	$25.70	$138.02	$128.59	$102.43	$120.02	$45.92	$106.55
		Interoffice Channel - OC48 - per Facility Termination	TBA	$11,691	$12,554	$11,134.00	$16,017	$14,950	$11,480	$10,952	$967.58	$11,632
		Interoffice Channel - OC12 interface on OC48 Facility	TBA	$1,424	$1,208	$1,137.00	$1,497	$1,451	$1,351.00	$582.66	$1,561	$1,170
		NRC - Ordinarily Combined in GA (Note 5)										
		NRC - OC48 - Facility Termination - 1st	TBA	NA	NA	$1,034.00	NA	NA	NA	NA	NA	NA
		NRC - OC48 - Facility Termination - Add'l	TBA	NA	NA	$317.38	NA	NA	NA	NA	NA	NA
		NRC - OC48 - Interface OC12 on OC48 - 1st	TBA	NA	NA	$539.36	NA	NA	NA	NA	NA	NA
		NRC - OC48 - Interface OC12 on OC48 - Add'l	TBA	NA	NA	$317.38	NA	NA	NA	NA	NA	NA
		NRC - OC48 - Facility Termination - Disconnect - 1st	TBA	NA	NA	$122.31	NA	NA	NA	NA	NA	NA
		NRC - OC48 - Facility Termination - Disconnect - Add'l	TBA	NA	NA	$119.14	NA	NA	NA	NA	NA	NA
		NRC - OC48- Interface OC12 on OC48 - Disconnect - 1st	TBA	NA	NA	$122.31	NA	NA	NA	NA	NA	NA
		NRC - OC48 - Interface OC12 on OC48 - Disconnect - Add'l	TBA	NA	NA	$37.55	NA	NA	NA	NA	NA	NA
		NRC - Electronic Svc Order, per LSR	SOMEC	NA	NA	$3.50	NA	NA	NA	NA	NA	NA
		NRC - OC48 - Facility Termination-Manual Svc Order vs Electronic-Disconnect-1st	SOMAN	NA	NA	$37.55	NA	NA	NA	NA	NA	NA
		NRC - OC48 - Facility Termination-Manual Svc Order vs Electronic-Disconnect-Add'l	SOMAN	NA	NA	$37.55	NA	NA	NA	NA	NA	NA
		NRC - OC48 - Interface - Manual Svc Order vs Electronic-Disconnect-1st	SOMAN	NA	NA	$37.55	NA	NA	NA	NA	NA	NA
		NRC - OC48 - Interface - Manual Svc Order vs Electronic-Disconnect-Add'l	SOMAN	NA	NA	$18.03	NA	NA	NA	NA	NA	NA
		NRC - OC-48 - Incremental Charge--Manual Svc Order-1st	SOMAN	NA	NA	$18.03	NA	NA	NA	NA	NA	NA
		NRC - OC-48 - Incremental Charge--Manual Svc Order-Add'l	SOMAN	NA	NA	$18.03	NA	NA	NA	NA	NA	NA
		NRC - OC48 - Interface OC12 on OC48 - Incremental Charge--Manual Svc Order-1st	SOMAN	NA	NA	$18.03	NA	NA	NA	NA	NA	NA
		NRC - OC48 - Interface OC12 on OC48 - Incremental Charge--Manual Svc Order-Ad	SOMAN	NA	NA	$18.03	NA	NA	NA	NA	NA	NA
		NRC-All Existing Combination "Switch As Is" Conversion Charge (Note 6)										
		NRC-OC-48 COMBINATION - "Switch As Is" Conversion Charge - 1st	UNCCC	$54.03	$32.75	$58.43	$54.09	$54.23	$54.09	$54.00	$54.26	$54.13
		NRC-OC-48 COMBINATION - "Switch As Is" Conversion Charge - Add'l	UNCCC	$32.11	$32.75	$26.99	$32.16	$32.24	$32.16	$32.10	$32.25	$32.17
		NRC- OC-48 COMBINATION - "Switch As Is" Conversion Charge - Disconnect - 1st	UNCCC	$0.00	$16.77	$12.61	$0.00	$0.00	$0.00	$0.00	$0.00	$0.00
		NRC- OC-48 COMBINATION - "Switch As Is" Conversion Charge - Disconnect - Add	UNCCC	$0.00	$16.77	$12.61	$0.00	$0.00	$0.00	$0.00	$0.00	$0.00
		Channelization:										
		DS3 Channelization										
		DS3 Channelized System per month	MQ3	$225.36	$222.61	$182.04	$236.32	$245.84	$229.30	$226.81	$200.01	$222.98
		DS3 Interface per month (DS1 COCI)	UC1D1	$17.22	$14.51	$11.02	$8.52	$7.55	$5.58	$4.61	$11.99	$3.91
		NRC - Ordinarily Combined in GA (Note 5)										
		NRC - DS3 Channelization - 1st	MQ3	NA	NA	$316.28	NA	NA	NA	NA	NA	NA
		NRC - DS3 Channelization - Add'l	MQ3	NA	NA	$171.72	NA	NA	NA	NA	NA	NA
		NRC - Channel Activation - 1st	UC1D1	NA	NA	$12.02	NA	NA	NA	NA	NA	NA
		NRC - Channel Activation - Addl	UC1D1	NA	NA	$8.66	NA	NA	NA	NA	NA	NA
		NRC - Electronic Svc Order, per LSR	SOMEC	NA	NA	$3.50	NA	NA	NA	NA	NA	NA
		NRC - DS3 Channelization - Incremental Charge--Manual Svc Order - 1st	SOMAN	NA	NA	$50.72	NA	NA	NA	NA	NA	NA
		NRC - DS3 Channelization - Incremental Charge--Manual Svc Order - Add'l	SOMAN	NA	NA	$38.45	NA	NA	NA	NA	NA	NA
		NRC - DS3 Channelization - Incremental Charge--Manual Svc Order - Disconnect -	SOMAN	NA	NA	$30.09	NA	NA	NA	NA	NA	NA
		NRC - DS3 Channelization - Incremental Charge--Manual Svc Order - Disconnect - A	SOMAN	NA	NA	$18.56	NA	NA	NA	NA	NA	NA
		NRC-All Existing Combination "Switch As Is" Conversion Charge (Note 6)										
		NRC-DS3/STS-1 COMBINATION - "Switch As Is" Conversion Charge - 1st	UNCCC	$54.03	$32.75	$58.43	$54.09	$54.23	$54.09	$54.00	$54.26	$54.13
		NRC-DS3/STS-1 COMBINATION - "Switch As Is" Conversion Charge - Add'l	UNCCC	$32.11	$32.75	$26.99	$32.16	$32.24	$32.16	$32.10	$32.25	$32.17
		NRC- DS3/STS-1 COMBINATION - "Switch As Is" Conversion Charge - Disconnect	UNCCC	$0.00	$16.77	$12.61	$0.00	$0.00	$0.00	$0.00	$0.00	$0.00
		NRC- DS3/STS-1 COMBINATION - "Switch As Is" Conversion Charge - Disconnect	UNCCC	$0.00	$16.77	$12.61	$0.00	$0.00	$0.00	$0.00	$0.00	$0.00

New EEL rates are the sum of the individual UNE network elements (interoffice transport and loop [channelization if applicable].										
DS1 Channelization										
DS1 Channelized System per month	MQ1	$136.82	$154.74	$126.22	$200.01	$209.87	$146.87	$177.72	$147.51	$165.21
OCU-DP(data) interface card per month (2.4-64kbs)	1D1DD	$1.66	$2.22	$1.86	$2.94	$3.12	$2.86	$2.88	$2.34	$2.46
VG interface card per month	1D1VG	$0.8586	$1.46	$1.17	$1.40	$1.62	$1.45	$1.64	$1.47	$1.25
2-wire ISDN(BRITE card) per month	UC1CA	$3.41	$3.86	$3.71	$4.04	$4.18	$3.88	$3.76	$4.21	$3.33
NRC - Ordinarily Combined in GA (Note 5)										
NRC - DS1 Channelization - 1st	MQ1	NA	NA	$206.09	NA	NA	NA	NA	NA	NA
NRC - DS1 Channelization - Add'l	MQ1	NA	NA	$137.06	NA	NA	NA	NA	NA	NA
NRC - Channel Activation VG - 1st	1D1VG	NA	NA	$12.02	NA	NA	NA	NA	NA	NA
NRC - Channel Activation VG - Add'l	1D1VG	NA	NA	$8.66	NA	NA	NA	NA	NA	NA
NRC - Channel Activation OCU-DP- 1st	1D1DD	NA	NA	$12.02	NA	NA	NA	NA	NA	NA
NRC - Channel Activation OCU-DP- Add'l	1D1DD	NA	NA	$8.66	NA	NA	NA	NA	NA	NA
NRC - Channel Activation BRITE - 1st	UCICA	NA	NA	$12.02	NA	NA	NA	NA	NA	NA
NRC - Channel Activation BRITE - Add'l	UCICA	NA	NA	$8.66	NA	NA	NA	NA	NA	NA
NRC - Electronic Svc Order, per LSR	SOMEC	NA	NA	$3.50	NA	NA	NA	NA	NA	NA
NRC - DS1 Channelization - Incremental Charge--Manual Svc Order - 1st	SOMAN	NA	NA	$14.75	NA	NA	NA	NA	NA	NA
NRC - DS1 Channelization - Incremental Charge--Manual Svc Order - Add'l	SOMAN	NA	NA	$6.55	NA	NA	NA	NA	NA	NA
NRC - DS1 Channelization - Incremental Charge--Manual Svc Order - Disconnect -	SOMAN	NA	NA	$10.70	NA	NA	NA	NA	NA	NA
NRC - DS1 Channelization - Incremental Charge--Manual Svc Order - Disconnect -	SOMAN	NA	NA	$0.00	NA	NA	NA	NA	NA	NA
NRC-All Existing Combination "Switch As Is" Conversion Charge (Note 6)										
NRC-DS1 COMBINATION - "Switch As Is" Conversion Charge - 1st	UNCCC	$54.03	$32.75	$58.43	$54.09	$54.23	$54.09	$54.00	$54.26	$54.13
NRC-DS1 COMBINATION - "Switch As Is" Conversion Charge - Add'l	UNCCC	$32.11	$32.75	$26.99	$32.16	$32.24	$32.16	$32.10	$32.25	$32.17
NRC- DS1 COMBINATION - "Switch As Is" Conversion Charge - Disconnect - 1st	UNCCC	$0.00	$16.77	$12.61	$0.00	$0.00	$0.00	$0.00	$0.00	$0.00
NRC- DS1 COMBINATION - "Switch As Is" Conversion Charge - Disconnect - Add'l	UNCCC	$0.00	$16.77	$12.61	$0.00	$0.00	$0.00	$0.00	$0.00	$0.00
Access to DCS - Customer Reconfiguration (FlexServ)										
DS1 DSC Termination with DS0 Switching		TBD	$28.72	$22.86	TBD	TBD	TBD	TBD	TBD	TBD
DS1 DSC Termination with DS1 Switching		TBD	$12.23	$8.64	TBD	TBD	TBD	TBD	TBD	TBD
DS3 DSC Termination with DS1 Switching		TBD	$154.31	$151.85	TBD	TBD	TBD	TBD	TBD	TBD
NRC - Ordinarily Combined in GA:										
NRC - Customer Configuration Establishment		TBD	$2.97	$2.91	TBD	TBD	TBD	TBD	TBD	TBD
NRC - Customer Configuration Establishment - Disconnect		TBD	$3.44	$3.36	TBD	TBD	TBD	TBD	TBD	TBD
NRC- DS1 DSC Termination with DS0 Switching - 1st		TBD	$51.50	$32.07	TBD	TBD	TBD	TBD	TBD	TBD
NRC- DS1 DSC Termination with DS0 Switching - Add'l		TBD	$39.64	$31.49	TBD	TBD	TBD	TBD	TBD	TBD
NRC- DS1 DSC Termination with DS0 Switching - Disconnect - 1st		TBD	$31.06	$20.16	TBD	TBD	TBD	TBD	TBD	TBD
NRC- DS1 DSC Termination with DS0 Switching - Disconnect - Add'l		TBD	$24.98	$20.16	TBD	TBD	TBD	TBD	TBD	TBD
NRC- DS1 DSC Termination with NRC- DS1 Switching - 1st		TBD	$37.23	$18.07	TBD	TBD	TBD	TBD	TBD	TBD
NRC- DS1 DSC Termination with NRC- DS1 Switching - Add'l		TBD	$25.36	$17.49	TBD	TBD	TBD	TBD	TBD	TBD
NRC- DS1 DSC Termination with NRC- DS1 Switching - Disconnect - 1st		TBD	$22.81	$12.10	TBD	TBD	TBD	TBD	TBD	TBD
NRC- DS1 DSC Termination with NRC- DS1 Switching - Disconnect - Add'l		TBD	$16.73	$12.10	TBD	TBD	TBD	TBD	TBD	TBD
NRC- DS3 DSC Termination with DS1 Switching - 1st		TBD	$51.50	$32.07	TBD	TBD	TBD	TBD	TBD	TBD
NRC- DS3 DSC Termination with DS1 Switching - Add'l		TBD	$39.64	$31.49	TBD	TBD	TBD	TBD	TBD	TBD
NRC- DS3 DSC Termination with DS1 Switching - Disconnect - 1st		TBD	$31.06	$20.16	TBD	TBD	TBD	TBD	TBD	TBD
NRC- DS3 DSC Termination with DS1 Switching - Disconnect - Add'l		TBD	$24.98	$20.16	TBD	TBD	TBD	TBD	TBD	TBD
NRC-All Existing Combination "Switch As Is" Conversion Charge (Note 6)										
NRC-DCS COMBINATION - "Switch As Is" Conversion Charge - 1st	UNCCC	$54.03	$32.75	$58.43	$54.09	$54.23	$54.09	$54.00	$54.26	$54.13
NRC-DCS COMBINATION - "Switch As Is" Conversion Charge - Add'l	UNCCC	$32.11	$32.75	$26.99	$32.16	$32.24	$32.16	$32.10	$32.25	$32.17
NRC- DCS COMBINATION - "Switch As Is" Conversion Charge - Disconnect - 1st	UNCCC	$0.00	$16.77	$12.61	$0.00	$0.00	$0.00	$0.00	$0.00	$0.00
NRC- DCS COMBINATION - "Switch As Is" Conversion Charge - Disconnect - Add'l	UNCCC	$0.00	$16.77	$12.61	$0.00	$0.00	$0.00	$0.00	$0.00	$0.00
Node (Synchronet)										
Node per month	UNCNT	$15.77	$16.35	$13.98	$18.11	$15.43	$16.15	$16.00	$14.55	$17.11
NRC - Ordinarily Combined in GA:										
NRC - Node - 1st	UNCNT	NA	NA	$47.19	NA	NA	NA	NA	NA	NA

	New EEL rates are the sum of the individual UNE network elements (interoffice transport and loop [channelization if applicable].										
	NRC - Node - Add'l	UNCNT	NA	NA	$4.47	NA	NA	NA	NA	NA	NA
	NRC - Node - Disconnect - 1st	UNCNT	NA	NA	$13.81	NA	NA	NA	NA	NA	NA
	NR C - Node - Disconnect - Add'l	UNCNT	NA	NA	$3.95	NA	NA	NA	NA	NA	NA
	NRC - Node - Incremental Charge - Manual Service Order - 1st	SOMAN	NA	NA	$21.73	NA	NA	NA	NA	NA	NA
	NRC - Node - Incremental Charge - Manual Service Order - Add'l	SOMAN	NA	NA	NA	NA	NA	NA	NA	NA	NA
	NRC - Node - Incremental Charge - Manual Service Order - Disconnect -1st	SOMAN	NA	NA	$3.87	NA	NA	NA	NA	NA	NA
	NRC - Node - Incremental Charge - Manual Service Order - Disconnect - Add'l	SOMAN	NA	NA	NA	NA	NA	NA	NA	NA	NA
	NRC-All Existing Combination "Switch As Is" Conversion Charge (Note 6)										
	NRC-Node - "Switch As Is" Conversion Charge - 1st	UNCCC	$54.03	$32.75	$58.43	$54.09	$54.23	$54.09	$54.00	$54.26	$54.13
	NRC-Node - "Switch As Is" Conversion Charge - Add'l	UNCCC	$32.11	$32.75	$26.99	$32.16	$32.24	$32.16	$32.10	$32.25	$32.17
	NRC- Node - "Switch As Is" Conversion Charge - Disconnect - 1st	UNCCC	$0.00	$16.77	$12.61	$0.00	$0.00	$0.00	$0.00	$0.00	$0.00
	NRC- Node - "Switch As Is" Conversion Charge - Disconnect - Add'l	UNCCC	$0.00	$16.77	$12.61	$0.00	$0.00	$0.00	$0.00	$0.00	$0.00
	Optional Features & Functions:										
	NRC - Clear Channel Capability (B8ZS/ESF) Option - Subsequent - per DS1 Channe	CCOEF	$184.85	$184.92	$184.62	$184.91	$184.65	$184.60	$184.76	$185.26	$185.16
	NRC - Clear Channel Capability (B8ZS/ESF) Option - Subsequent - per DS1 Channe	CCOEF	$23.81	$23.82	$23.78	$23.82	$23.70	$23.78	$23.60	$23.86	$23.85
	NRC - Clear Channel Capability (B8ZS/ESF) Option - Subsequent - per DS1 Channe	CCOEF	$1.99	$2.07	$2.03	$1.99	$1.97	$1.96	$1.99	$1.99	$2.03
	NRC - Clear Channel Capability (B8ZS/ESF) Option - Subsequent - per DS1 Channe	CCOEF	$0.77	$0.80	$0.79	$0.78	$0.77	$0.76	$0.78	$0.78	$0.79
	NRC - Clear Channel Capability (B8ZS/ESF) Option - Subsequent - Manual Service	SOMAN	$29.23	$21.73	$29.33	$29.24	$29.20	$29.33	$29.33	$29.33	$29.33
	NRC - Clear Channel Capability (B8ZS/ESF) Option - Subsequent - Manual Service	SOMAN	$3.93	$3.87	$3.93	$3.94	$3.92	$3.93	$3.93	$3.93	$3.93
	NRC - Clear Channel Capability (B8ZS/SF) Option - Subsequent - per DS1 Channel	CCOSF	$184.85	$184.92	$184.62	$184.91	$184.65	$184.60	$184.76	$185.26	$185.16
	NRC - Clear Channel Capability (B8ZS/ESF) Option - Subsequent - per DS1 Channe	CCOSF	$23.81	$23.82	$23.78	$23.82	$23.70	$23.78	$23.60	$23.86	$23.85
	NRC - Clear Channel Capability (B8ZS/SF) Option - Subsequent - per DS1 Channel	CCOSF	$1.99	$2.07	$2.03	$1.99	$1.97	$1.96	$1.99	$1.99	$2.03
	NRC - Clear Channel Capability (B8ZS/ESF) Option - Subsequent - per DS1 Channe	CCOSF	$0.77	$0.80	$0.79	$0.78	$0.77	$0.76	$0.78	$0.78	$0.79
	NRC - Clear Channel Capability (B8ZS/SF) Option - Subsequent - Manual Service O	SOMAN	$29.23	$21.73	$29.33	$29.24	$29.20	$29.33	$29.33	$29.33	$29.33
	NRC - Clear Channel Capability (B8ZS/ESF) Option - Subsequent - Manual Service	SOMAN	$3.93	$3.87	$3.93	$3.94	$3.92	$3.93	$3.93	$3.93	$3.93
	Notes :										
	Interim rates subject to true-up.										
1	Geographically Deaveraged UNE Zones and applicable rates have been established for certain services, as shown in this Agreement. Where Geographically Deaveraged UNE Zones and applicable rates are established, Statewide rates are obsolete. Further, BellSouth is in the process of enhancing its billing systems in order to accomodate this Geographically Deaveraged UNE Zone Rate Structure. Until these enhancements are accomplished, estimated to be mid 2001, the UNE Zone 1 rate will be billed for all services residing in Zones 1, 2, 3 or 4, i.e., Rates for services residing in UNE Zones 2, 3 and UNE Zone 4, where applicable, will not be billed. Once billing enhancements are complete, all applicable UNE Zone rates reflected in this Agreement will be billed. Reference Internet Website http://www.interconnection.bellsouth.com/become_clec/ docs/interconnection/deavuzns.pdf to view Geographically Deaveraged UNE Zone Designations by Central Office.										
2	New EELs will only be available in the State of Georgia and in density Zone 1 of the following MSAs in the BellSouth Region:										
	Florida - Miami, Orlando, Ft. Lauderdale										
	Louisiana - New Orleans										
	N. Carolina - Greensboro, Charlotte										
	Tennessee - Nashville										
3	Unapproved rates are subject to true up.										
4	Add together the recurring rates of all the applicable network elements in order to obtain total monthly recurring rate.										
	* Examples:										
	- 2-wire VG Loop + Voice Grade Interface Card + DS1 Channelization System + DS1 Interoffice Channel										
	- DS1 Loop + DS1 Interface Card + DS3 Channelization System + DS3 Interoffice Channel										

			New EEL rates are the sum of the individual UNE network elements (interoffice transport and loop [channelization if applicable].										
			- DS3 Local Channel + DS3 Interoffice Channel + DS3 Channelization System + DS1 Interface Card										
		5	The Ordinarily Combined in GA NRC applies to new combinations within the State of Georgia.										
		6	The "Switch As Is" NRC is a conversion charge. One SAI charge is applicable per circuit.										

THIRD AMENDMENT
TO THE
AGREEMENT BETWEEN
ACCESS INTEGRATED NETWORKS, INC.
AND
BELLSOUTH TELECOMMUNICATIONS, INC.
DATED FEBRUARY 17, 2000

Pursuant to this Amendment, (the "Amendment"), Access Integrated Networks, Inc., ("Access Integrated"), and BellSouth Telecommunications, Inc. ("BellSouth"), hereinafter referred to collectively as the "Parties," hereby agree to amend that certain Interconnection Agreement between the Parties dated February 17, 2000 ("Agreement").

WHEREAS, BellSouth and Access Integrated entered into the Agreement on February 17, 2000, and;

NOW THEREFORE, in consideration of the mutual provisions contained herein and other good and valuable consideration, the receipt and sufficiency of which are hereby acknowledged, the Parties hereby covenant and agree as follows:

1. Add the following paragraphs as 5.4.7 and 5.4.7.1 to section 5.4 within Attachment 2:

   5.4.7. Unbundled Coin port/loop combination: An unbundled 2-wire voice grade coin port, local and tandem switching functionality, shared interoffice transport, and a 2-wire analog loop combined to provide an end user to end user transmission path that provides basic local exchange service. The service is to be utilized with a payphone set that is capable of performing coin phone functions such as call rating, coin return, and timing within the set itself.

   5.4.7.1. The Unbundled Coin port/loop combination is currently available in BellSouth's serving territory in Alabama, Florida, Georgia, Kentucky, Louisiana, Mississippi, North Carolina, South Carolina and Tennessee.

2. Add the following paragraphs as 5.3.2.2 and 5.3.2.2.1 to section 5.3.2 within Attachment 2:

   5.3.2.2 BellSouth currently is developing the billing capability to bill unbundled port rates (1) where BellSouth is not required, pursuant to section 5.1 to provide local circuit switching and (2) where BellSouth provides unbundled port/loop combinations that are "not currently combined" in all other MSAs except for the state of Georgia.

   5.3.2.2.1 In the interim, BellSouth shall bill rates listed in the "currently combined" section for all other MSAs for the unbundled port in such scenarios, and shall true-up the billing differences once the billing capability is developed.

3. Add the Unbundled Coin Port/Loop Combination Rate Matrix, Exhibit 1, to Exhibit C of Attachment 2.

4. All of the other provisions of the Agreement, dated February 17, 2000, shall remain in full force and effect.

5. Either or both of the Parties is authorized to submit this Amendment to the respective state regulatory authorities for approval subject to Section 252(e) of the Federal Telecommunications Act of 1996.

IN WITNESS WHEREOF, the Parties hereto have caused this Amendment to be executed by their respective duly authorized representatives on the date indicated below.

ACCESS Integrated Networks, Inc.	**BellSouth Telecommunications, Inc.**
Signature on file	Signature on file
By:_____	By: _____
William T. Wright	Patrick C. Finlen
Name: _____	Name:_____
Title: President	Title: Managing Director
Date: April 23, 2001	Date: May 2, 2001

Exhibit C

1. UNE COIN PORT/LOOP COMBINATION:	USOC	AL	FL	GA	KY	LA	MS	NC	SC	TN
1.1 RECURRING CHARGES (RCs), By Month				(Note 15)						
1.1.1 UNE COIN PORTS (Note 9) (Note 10)										
2-WIRE COIN 2-WAY WITHOUT OPERATOR SCREENING AND WITHOUT BLOCKING (AL, KY, LA, MS)	UEPRF	$2.53	NA	NA	$2.91	$2.74	$2.47	NA	NA	NA
2-WIRE COIN 2-WAY WITHOUT OPERATOR SCREENING AND WITHOUT BLOCKING (NC)	UEPND	NA	NA	NA	NA	NA	NA	$2.62	NA	NA
2-WIRE COIN 2-WAY WITHOUT OPERATOR SCREENING AND WITHOUT BLOCKING (SC)	UEPSD	NA	NA	NA	NA	NA	NA	NA	$4.04	NA
2-WIRE COIN 2-WAY WITHOUT OPERATOR SCREENING AND WITHOUT BLOCKING (TN)	UEPTB	NA	NA	NA	NA	NA	NA	NA	NA	$4.72
2-WIRE COIN 2-WAY WITHOUT OPERATOR SCREENING AND WITHOUT BLOCKING; WITH DIALING PARITY (Note 3) (MS)	UEPMC	NA	NA	NA	NA	NA	$2.47	NA	NA	NA
2-WIRE COIN 2-WAY WITH OPERATOR SCREENING (AL, KY)	UEPRE	$2.53	NA	NA	$2.91	NA	NA	NA	NA	NA
2-WIRE COIN 2-WAY WITH OPERATOR SCREENING (GA)	UEPGC	NA	NA	$1.89	NA	NA	NA	NA	NA	NA
2-WIRE COIN 2-WAY WITH OPERATOR SCREENING (NC)	UEPNC	NA	NA	NA	NA	NA	NA	$2.62	NA	NA
2-WIRE COIN 2-WAY WITH OPERATOR SCREENING AND BLOCKING: 011, 900/976, 1+DDD (AL, KY, LA, MS, SC)	UEPRA	$2.53	NA	NA	$2.91	$2.74	$2.47	NA	$4.04	NA
2-WIRE COIN 2-WAY WITH OPERATOR SCREENING AND BLOCKING: 011, 900/976, 1+DDD (FL)	UEP2F	NA	$1.48	NA	NA	NA	NA	NA	NA	NA
2-WIRE COIN 2-WAY WITH OPERATOR SCREENING AND BLOCKING: 011, 900/976, 1+DDD (GA)	UEP2G	NA	NA	$1.89	NA	NA	NA	NA	NA	NA
2-WIRE COIN 2-WAY WITH OPERATOR SCREENING AND BLOCKING: 011, 900/976, 1+DDD; WITH DIALING PARITY (MS)	UEPMA	NA	NA	NA	NA	NA	$2.47	NA	NA	NA

Exhibit 1
BellSouth/Access Integrated
UNE-P Coin Rates

Exhibit C

	USOC	AL	FL	GA	KY	LA	MS	NC	SC	TN
2-WIRE COIN 2-WAY WITH OPERATOR SCREENING AND BLOCKING: 011, 900/976, 1+DDD (SC)	UEPSA	NA	NA	NA	NA	NA	NA	NA	$4.04	NA
2-WIRE COIN 2-WAY WITH OPERATOR SCREENING AND BLOCKING: 011, 900/976, 1+DDD (NC, TN)	UEPRP	NA	NA	NA	NA	NA	NA	$2.62	NA	$4.72
2-WIRE COIN 2-WAY WITH OPERATOR SCREENING AND 011 BLOCKING (AL, LA, MS)	UEPRB	$2.53	NA	NA	NA	$2.74	$2.47	NA	NA	NA
2-WIRE COIN 2-WAY WITH OPERATOR SCREENING AND 011 BLOCKING (FL)	UEPFA	NA	$1.48	NA	NA	NA	NA	NA	NA	NA
2-WIRE COIN 2-WAY WITH OPERATOR SCREENING AND 011 BLOCKING (GA)	UEPGA	NA	NA	$1.89	NA	NA	NA	NA	NA	NA
2-WIRE COIN 2-WAY WITH OPERATOR SCREENING AND 011 BLOCKING (KY)	UEPKA	NA	NA	NA	$2.91	NA	NA	NA	NA	NA
2-WIRE COIN 2-WAY WITH OPERATOR SCREENING AND 011 BLOCKING (SC)	UEPSH	NA	NA	NA	NA	NA	NA	NA	$4.04	NA
2-WIRE COIN 2-WAY WITH OPERATOR SCREENING AND 011 BLOCKING (NC)	UEPNB	NA	NA	NA	NA	NA	NA	$2.62	NA	NA
2-WIRE COIN 2-WAY WITH OPERATOR SCREENING AND 011 BLOCKING (TN)	UEPTA	NA	NA	NA	NA	NA	NA	NA	NA	$4.72
2-WIRE COIN 2-WAY WITH OPERATOR SCREENING AND 011 BLOCKING; WITH DIALING PARITY (MS)	UEPMB	NA	NA	NA	NA	NA	$2.47	NA	NA	NA
2-WIRE COIN 2-WAY WITH OPERATOR SCREENING AND 011 BLOCKING; WITH DIALING PARITY (SC)	UEPSC	NA	NA	NA	NA	NA	NA	NA	$4.04	NA
2-WIRE COIN 2-WAY WITH OPERATOR SCREENING AND 900/976 BLOCKING (GA)	UEPGB	NA	NA	$1.89	NA	NA	NA	NA	NA	NA
2-WIRE COIN 2-WAY WITH OPERATOR SCREENING AND BLOCKING: 900/976, 1+DDD, 011+, AND LOCAL (AL, KY, LA, MS)	UEPCD	$2.53	NA	NA	$2.91	$2.74	$2.47	NA	NA	NA
2-WIRE COIN 2-WAY WITH OPERATOR SCREENING AND BLOCKING: 900/976, 1+DDD, 011+, AND LOCAL (FL)	UEPCG	NA	$1.48	NA	NA	NA	NA	NA	NA	NA

Exhibit 1
BellSouth/Access Integrated
UNE-P Coin Rates

Exhibit C

	USOC	AL	FL	GA	KY	LA	MS	NC	SC	TN
2-WIRE COIN 2-WAY WITH OPERATOR SCREENING AND BLOCKING: 900/976, 1+DDD, 011+, AND LOCAL (GA)	UEPCH	NA	NA	$1.89	NA	NA	NA	NA	NA	NA
2-WIRE COIN 2-WAY WITH OPERATOR SCREENING AND BLOCKING: 900/976, 1+DDD, 011+, AND LOCAL (SC)	UEPCC	NA	NA	NA	NA	NA	NA	NA	$4.04	NA
2-WIRE COIN 2-WAY WITH OPERATOR SCREENING AND BLOCKING: 900/976, 1+DDD, 011+, AND LOCAL (NC, TN)	UEPCA	NA	NA	NA	NA	NA	NA	$2.62	NA	$4.72
2-WIRE COIN 2-WAY WITH OPERATOR SCREENING AND BLOCKING: 900/976, 1+DDD, 011+, AND LOCAL; ENHANCED CALLING OPT 3YV (SC)	UEPCE	NA	NA	NA	NA	NA	NA	NA	$4.04	NA
2-WIRE COIN 2-WAY WITH OPERATOR SCREENING AND BLOCKING: 900/976, 1+DDD, 011+, AND LOCAL; ENHANCED CALLING OPT AP7 (SC)	UEPCF	NA	NA	NA	NA	NA	NA	NA	$4.04	NA
2-WIRE COIN 2-WAY WITH OPERATOR SCREENING AND BLOCKING: 900/976, 1+DDD, 011+, AND LOCAL; WITH DIALING PARITY (MS)	UEPCJ	NA	NA	NA	NA	NA	$2.47	NA	NA	NA
2-WIRE COIN OUTWARD WITHOUT BLOCKING AND WITHOUT OPERATOR SCREENING (KY, LA, MS)	UEPRN	NA	NA	NA	$2.91	$2.74	$2.47	NA	NA	NA
2-WIRE COIN OUTWARD WITHOUT BLOCKING AND WITHOUT OPERATOR SCREENING (SC)	UEPSG	NA	NA	NA	NA	NA	NA	NA	$4.04	NA
2-WIRE COIN OUTWARD WITHOUT BLOCKING AND WITHOUT OPERATOR SCREENING; WITH DIALING PARITY (MS)	UEPME	NA	NA	NA	NA	NA	$2.47	NA	NA	NA
2-WIRE COIN OUTWARD WITH OPERATOR SCREENING AND 011 BLOCKING (GA, KY, MS)	UEPRJ	NA	NA	$1.89	$2.91	NA	$2.47	NA	NA	NA
2-WIRE COIN OUTWARD WITH OPERATOR SCREENING AND 011 BLOCKING (LA)	UEPLA	NA	NA	NA	NA	$2.74	NA	NA	NA	NA
2-WIRE COIN OUTWARD WITH OPERATOR SCREENING AND 011 BLOCKING (SC)	UEPSF	NA	NA	NA	NA	NA	NA	NA	$4.04	NA

Exhibit 1
BellSouth/Access Integrated
UNE-P Coin Rates

Exhibit C

	USOC	AL	FL	GA	KY	LA	MS	NC	SC	TN
2-WIRE COIN OUTWARD WITH OPERATOR SCREENING AND 011 BLOCKING (AL, FL)	UEPRK	$2.53	$1.48	NA	NA	NA	NA	NA	NA	NA
2-WIRE COIN OUTWARD WITH OPERATOR SCREENING AND 011 BLOCKING (NC)	UEPNE	NA	NA	NA	NA	NA	NA	$2.62	NA	NA
2-WIRE COIN OUTWARD WITH OPERATOR SCREENING AND 011 BLOCKING (TN)	UEPTC	NA	NA	NA	NA	NA	NA	NA	NA	$4.72
2-WIRE COIN OUTWARD WITH OPERATOR SCREENING AND BLOCKING: 900/976, 1+DDD, 011+ (FL)	UEPOF	NA	$1.48	NA	NA	NA	NA	NA	NA	NA
2-WIRE COIN OUTWARD WITH OPERATOR SCREENING AND 011 BLOCKING; WITH DIALING PARITY (MS)	UEPMD	NA	NA	NA	NA	NA	$2.47	NA	NA	NA
2-WIRE COIN OUTWARD WITH OPERATOR SCREENING AND BLOCKING: 011, 900/976, 1+DDD (AL, KY, LA, MS)	UEPRH	$2.53	NA	NA	$2.91	$2.74	$2.47	NA	NA	NA
2-WIRE COIN OUTWARD WITH OPERATOR SCREENING AND BLOCKING: 011, 900/976, 1+DDD (SC)	UEPSJ	NA	NA	NA	NA	NA	NA	NA	$4.04	NA
2-WIRE COIN OUTWARD WITH OPERATOR SCREENING AND BLOCKING: 900/976, 1+DDD, 011+, AND LOCAL (AL, KY, LA, MS)	UEPCN	$2.53	NA	NA	$2.91	$2.74	$2.47	NA	NA	NA
2-WIRE COIN OUTWARD WITH OPERATOR SCREENING AND BLOCKING: 900/976, 1+DDD, 011+, AND LOCAL (FL, GA)	UEPCQ	NA	$1.48	$1.89	NA	NA	NA	NA	NA	NA
2-WIRE COIN OUTWARD WITH OPERATOR SCREENING AND BLOCKING: 900/976, 1+DDD, 011+, AND LOCAL (SC)	UEPCM	$2.53	NA	NA	NA	NA	NA	NA	$4.04	NA
2-WIRE COIN OUTWARD WITH OPERATOR SCREENING AND BLOCKING: 900/976, 1+DDD, 011+, AND LOCAL (NC)	UEPCL	NA	NA	NA	NA	NA	NA	$2.62	NA	NA
2-WIRE COIN OUTWARD WITH OPERATOR SCREENING AND BLOCKING: 900/976, 1+DDD, 011+, AND LOCAL (TN)	UEPOT	NA	NA	NA	NA	NA	NA	NA	NA	$4.72

Exhibit C

	USOC	AL	FL	GA	KY	LA	MS	NC	SC	TN
2-WIRE COIN OUTWARD WITH OPERATOR SCREENING AND BLOCKING: 900/976, 1+DDD, 011+, AND LOCAL; WITH ENHANCED CALLING OPT 3YW (SC)	UEPCP	NA	NA	NA	NA	NA	NA	NA	$4.04	NA
2-WIRE COIN OUTWARD WITH OPERATOR SCREENING AND BLOCKING: 900/976, 1+DDD, 011+, AND LOCAL; WITH DAILING PARITY (MS)	UEPCS	NA	NA	NA	NA	NA	$2.47	NA	NA	NA
1.1.2 UNE 2-WIRE VOICE GRADE LOOPS (RCs)										
RC – 2-WIRE VOICE GRADE LOOP – STATEWIDE	UEPLX	NA	NA	NA	NA	NA	NA	$14.18	NA	NA
RC – 2-WIRE VOICE GRADE LOOP – ZONE 1 (Note 14)	UEPLX	$14.35	$14.90	$10.80	$14.79	$14.05	$14.59	NA	$17.02	$12.48
RC – 2-WIRE VOICE GRADE LOOP – ZONE 2 (Note 14)	UEPLX	$23.31	$18.51	$12.47	$27.68	$24.14	$19.33	NA	$25.66	$14.42
RC – 2-WIRE VOICE GRADE LOOP – ZONE 3 (Note 14)	UEPLX	$42.24	$24.25	$19.83	$47.78	$49.30	$27.63	NA	$33.99	$21.77
RC – 2-WIRE VOICE GRADE LOOP – ZONE 4 (Note 14)	UEPLX	NA	NA	NA	NA	NA	$36.47	NA	NA	NA
1.1.3 UNE COIN PORT/LOOP COMBINATION (RCs)										
RC – 2-WIRE VOICE GRADE LOOP WITH APPLICABLE UNE COIN PORT – STATEWIDE	Note 12	NA	NA	NA	NA	NA	NA	$16.80	NA	NA
RC – 2-WIRE VOICE GRADE LOOP WITH APPLICABLE UNE COIN PORT – ZONE 1	Note 12	$16.88	$16.38	$12.69	$17.70	$16.79	$17.06	NA	$21.06	$17.20
RC – 2-WIRE VOICE GRADE LOOP WITH APPLICABLE UNE COIN PORT – ZONE 2	Note 12	$25.84	$19.99	$14.36	$30.59	$26.88	$21.80	NA	$29.70	$19.14
RC – 2-WIRE VOICE GRADE LOOP WITH APPLICABLE UNE COIN PORT – ZONE 3	Note 12	$44.77	$25.73	$21.72	$50.69	$52.04	$30.10	NA	$38.03	$26.49
RC – 2-WIRE VOICE GRADE LOOP WITH APPLICABLE UNE COIN PORT – ZONE 4	Note 12	NA	NA	NA	NA	NA	$38.94	NA	NA	NA
1.1.4 ADDITIONAL UNE COIN PORT/LOOP (RCs)										
UNE COIN PORT/LOOP COMBO USAGE (FLAT RATE)	URECU	$1.56	$1.86	$3.59	$2.57	$1.81	$4.62	$3.70	$4.05	$3.45

Exhibit 1
BellSouth/Access Integrated
UNE-P Coin Rates

Exhibit C

	USOC	AL	FL	GA	KY	LA	MS	NC	SC	TN
1.2 NONRECURRING CHARGES (NRC)										
1.2.1 CURRENTLY COMBINED UNE COIN PORT/LOOP COMBO (NRCs) (Note 16)										
CONVERSION CHARGE – SWITCH AS IS – 1ST	USAC2	$2.80	$0.20	$2.01	$10.00	$3.80	$5.20	$2.77	$1.59	$1.03
CONVERSION CHARGE – SWITCH AS IS – ADD'L	USAC2	$0.41	$0.20	$0.31	$10.00	$0.29	$0.41	$0.40	$0.40	$0.29
CONVERSION CHARGE – SWITCH WITH CHANGE – 1ST	USACC	$2.80	$0.20	$2.01	$10.00	$3.80	$5.20	$2.77	$1.59	$1.03
CONVERSION CHARGE – SWITCH WITH CHANGE – ADD'L	USACC	$0.41	$0.20	$0.31	$10.00	$0.29	$0.41	$0.40	$0.40	$0.29
1.2.1.1 ADDITIONAL NRCs (Note 17)										
SUBSEQUENT ACTIVITY (Note 13)	USAS2	$10.00	$10.00	$10.00	$10.00	$10.00	$10.00	$10.00	$10.00	$10.00
1.2.1.2 OSS NRCs (Note 17)										
OSS LSR CHARGE, ELECTRONIC, PER LSR RECEIVED FROM THE CLEC BY ONE OF THE OSS INTERACTIVE INTERFACES	SOMEC	$3.50	$2.75	$3.50	$3.50	$3.50	$3.50	$3.50	$3.50	$3.50
INCREMENTAL MANUAL SERVICE ORDER CHARGE – 1ST	SOMAN	$40.71	$21.56	$33.67	$19.99	$31.92	$43.52	$40.18	$43.19	$30.89
INCREMENTAL MANUAL SERVICE ORDER CHARGE – ADD'L	SOMAN	$9.58	$21.56	$7.88	$19.99	$7.32	$9.99	$9.45	$9.91	$7.03
SUBSEQUENT DATABASE UPDATE - ELECTRONIC		$1.44	NA	NA	NA	$2.11	$2.87	$1.42	$0.71	$0.76
SUBSEQUENT DATABASE UPDATE – MANUAL SERVICE ORDER		$8.25	NA	NA	NA	$5.12	$6.88	$10.27	$8.91	$7.97
ELECTRONIC SERVICE ORDER DISCONNECT	SOMEC	NA	$0.42	NA	NA	NA	NA	NA	NA	NA
INCREMENTAL MANUAL SERVICE ORDER DISCONNECT	SOMAN	$20.00	$3.84	$20.00	$20.00	$20.00	$20.00	$20.00	$20.00	$20.00
1.2.2 NOT CURRENTLY COMBINED (NRCs) (APPLICABLE IN GA AS SPECIFIED IN Note 16)										
2-WIRE COIN 2-WAY WITH OPERATOR SCREENING (GA) – 1ST	UEPGC	NA	NA	$22.14	NA	NA	NA	NA	NA	NA
2-WIRE COIN 2-WAY WITH OPERATOR SCREENING (GA) – ADD'L	UEPGC	NA	NA	$15.25	NA	NA	NA	NA	NA	NA

Exhibit C

	USOC	AL	FL	GA	KY	LA	MS	NC	SC	TN
2-WIRE COIN 2-WAY WITH OPERATOR SCREENING AND BLOCKING: 011, 900/976, 1+DDD (GA) – 1ST	UEP2G	NA	NA	$22.14	NA	NA	NA	NA	NA	NA
2-WIRE COIN 2-WAY WITH OPERATOR SCREENING AND BLOCKING: 011, 900/976, 1+DDD (GA) – ADD'L	UEP2G	NA	NA	$15.25	NA	NA	NA	NA	NA	NA
2-WIRE COIN 2-WAY WITH OPERATOR SCREENING AND 011 BLOCKING (GA) – 1ST	UEPGA	NA	NA	$22.14	NA	NA	NA	NA	NA	NA
2-WIRE COIN 2-WAY WITH OPERATOR SCREENING AND 011 BLOCKING (GA) – ADD'L	UEPGA	NA	NA	$15.25	NA	NA	NA	NA	NA	NA
2-WIRE COIN 2-WAY WITH OPERATOR SCREENING AND 900/976 BLOCKING (GA) – 1ST	UEPGB	NA	NA	$22.14	NA	NA	NA	NA	NA	NA
2-WIRE COIN 2-WAY WITH OPERATOR SCREENING AND 900/976 BLOCKING (GA) – ADD'L	UEPGB	NA	NA	$15.25	NA	NA	NA	NA	NA	NA
2-WIRE COIN 2-WAY WITH OPERATOR SCREENING AND BLOCKING: 900/976, 1+DDD, 011+, AND LOCAL (GA) – 1ST	UEPCH	NA	NA	$22.14	NA	NA	NA	NA	NA	NA
2-WIRE COIN 2-WAY WITH OPERATOR SCREENING AND BLOCKING: 900/976, 1+DDD, 011+, AND LOCAL (GA) – ADD'L	UEPCH	NA	NA	$15.25	NA	NA	NA	NA	NA	NA
2-WIRE COIN OUTWARD WITH OPERATOR SCREENING AND 011 BLOCKING (GA, KY, MS) – 1ST	UEPRJ	NA	NA	$22.14	NA	NA	NA	NA	NA	NA
2-WIRE COIN OUTWARD WITH OPERATOR SCREENING AND 011 BLOCKING (GA, KY, MS) – ADD'L	UEPRJ	NA	NA	$15.25	NA	NA	NA	NA	NA	NA
2-WIRE COIN OUTWARD WITH OPERATOR SCREENING AND BLOCKING: 900/976, 1+DDD, 011+, AND LOCAL (GA) – 1ST	UEPCQ	NA	NA	$22.14	NA	NA	NA	NA	NA	NA
2-WIRE COIN OUTWARD WITH OPERATOR SCREENING AND BLOCKING: 900/976, 1+DDD, 011+, AND LOCAL (GA) – ADD'L	UEPCQ	NA	NA	$15.25	NA	NA	NA	NA	NA	NA
1.2.2.1 DISCONNECT NRCs (APPLICABLE IN GA AS SPECIFIED IN Note 16)										

Exhibit 1
BellSouth/Access Integrated
UNE-P Coin Rates

Exhibit C

	USOC	AL	FL	GA	KY	LA	MS	NC	SC	TN
2-WIRE COIN 2-WAY WITH OPERATOR SCREENING (GA) – 1ST	UEPGC	NA	NA	$8.45	NA	NA	NA	NA	NA	NA
2-WIRE COIN 2-WAY WITH OPERATOR SCREENING (GA) – ADD'L	UEPGC	NA	NA	$3.91	NA	NA	NA	NA	NA	NA
2-WIRE COIN 2-WAY WITH OPERATOR SCREENING AND BLOCKING: 011, 900/976, 1+DDD (GA) – 1ST	UEP2G	NA	NA	$8.45	NA	NA	NA	NA	NA	NA
2-WIRE COIN 2-WAY WITH OPERATOR SCREENING AND BLOCKING: 011, 900/976, 1+DDD (GA) – ADD'L	UEP2G	NA	NA	$3.91	NA	NA	NA	NA	NA	NA
2-WIRE COIN 2-WAY WITH OPERATOR SCREENING AND 011 BLOCKING (GA) – 1ST	UEPGA	NA	NA	$8.45	NA	NA	NA	NA	NA	NA
2-WIRE COIN 2-WAY WITH OPERATOR SCREENING AND 011 BLOCKING (GA) – ADD'L	UEPGA	NA	NA	$3.91	NA	NA	NA	NA	NA	NA
2-WIRE COIN 2-WAY WITH OPERATOR SCREENING AND 900/976 BLOCKING (GA) – 1ST	UEPGB	NA	NA	$8.45	NA	NA	NA	NA	NA	NA
2-WIRE COIN 2-WAY WITH OPERATOR SCREENING AND 900/976 BLOCKING (GA) – ADD'L	UEPGB	NA	NA	$3.91	NA	NA	NA	NA	NA	NA
2-WIRE COIN 2-WAY WITH OPERATOR SCREENING AND BLOCKING: 900/976, 1+DDD, 011+, AND LOCAL (GA) – 1ST	UEPCH	NA	NA	$8.45	NA	NA	NA	NA	NA	NA
2-WIRE COIN 2-WAY WITH OPERATOR SCREENING AND BLOCKING: 900/976, 1+DDD, 011+, AND LOCAL (GA) – ADD'L	UEPCH	NA	NA	$3.91	NA	NA	NA	NA	NA	NA
2-WIRE COIN OUTWARD WITH OPERATOR SCREENING AND 011 BLOCKING (GA, KY, MS) – 1ST	UEPRJ	NA	NA	$8.45	NA	NA	NA	NA	NA	NA
2-WIRE COIN OUTWARD WITH OPERATOR SCREENING AND 011 BLOCKING (GA, KY, MS) – ADD'L	UEPRJ	NA	NA	$3.91	NA	NA	NA	NA	NA	NA
2-WIRE COIN OUTWARD WITH OPERATOR SCREENING AND BLOCKING: 900/976, 1+DDD, 011+, AND LOCAL (GA) – 1ST	UEPCQ	NA	NA	$8.45	NA	NA	NA	NA	NA	NA
2-WIRE COIN OUTWARD WITH OPERATOR SCREENING AND BLOCKING: 900/976, 1+DDD, 011+, AND LOCAL (GA) – ADD'L	UEPCQ	NA	NA	$3.91	NA	NA	NA	NA	NA	NA

Exhibit C

	USOC	AL	FL	GA	KY	LA	MS	NC	SC	TN
1.2.2.2 ADDITIONAL NRCs (APPLICABLE IN GA AS SPECIFIED IN Note 16)										
SUBSEQUENT ACTIVITY (Note 13)	USAS2	NA	NA	$10.00	NA	NA	NA	NA	NA	NA
1.2.2.3 OSS NRCs (APPLICABLE IN GA AS SPECIFIED IN Note 16) (Note 17)										
OSS LSR CHARGE, ELECTRONIC, PER LSR RECEIVED FROM THE CLEC BY ONE OF THE OSS INTERACTIVE INTERFACES	SOMEC	NA	NA	$3.50	NA	NA	NA	NA	NA	NA
INCREMENTAL MANUAL SERVICE ORDER CHARGE – 1ST	SOMAN	NA	NA	$37.06	NA	NA	NA	NA	NA	NA
INCREMENTAL MANUAL SERVICE ORDER CHARGE – ADD'L	SOMAN	NA	NA	$8.19	NA	NA	NA	NA	NA	NA
ELECTRONIC SERVICE ORDER DISCONNECT	SOMEC	NA	NA	NA	NA	NA	NA	NA	NA	NA
INCREMENTAL MANUAL SERVICE ORDER DISCONNECT	SOMAN	NA	NA	$11.17	NA	NA	NA	NA	NA	NA
2. UNE COIN PORT/LOOP COMBINATION:	**USOC**	**AL**	**FL** Orlando, Ft. Lauderdale, Miami	**GA** Atlanta	**KY**	**LA** New Orleans	**MS**	**NC** Greensboro-Winston Salem-Highpoint / Charlotte - Gastonia-Rock Hill	**SC**	**TN** Nashville
2.1 RECURRING CHARGES (RCs), By Month										
2.1.1 UNE COIN PORTS (Note 18) (Note 19) (Note 20)										
2-WIRE COIN 2-WAY WITHOUT OPERATOR SCREENING AND WITHOUT BLOCKING (AL, KY, LA, MS)	UEPRF	$21.00	NA	NA	$14.00	$17.50	$24.15	NA	NA	NA

Exhibit 1
BellSouth/Access Integrated
UNE-P Coin Rates

Exhibit C

	USOC	AL	FL	GA	KY	LA	MS	NC	SC	TN
2-WIRE COIN 2-WAY WITHOUT OPERATOR SCREENING AND WITHOUT BLOCKING (NC)	UEPND	NA	NA	NA	NA	NA	NA	$17.50	NA	NA
2-WIRE COIN 2-WAY WITHOUT OPERATOR SCREENING AND WITHOUT BLOCKING (SC)	UEPSD	NA	NA	NA	NA	NA	NA	NA	$14.00	NA
2-WIRE COIN 2-WAY WITHOUT OPERATOR SCREENING AND WITHOUT BLOCKING (TN)	UEPTB	NA	NA	NA	NA	NA	NA	NA	NA	$14.00
2-WIRE COIN 2-WAY WITHOUT OPERATOR SCREENING AND WITHOUT BLOCKING; WITH DIALING PARITY (MS)	UEPMC	NA	NA	NA	NA	NA	$24.15	NA	NA	NA
2-WIRE COIN 2-WAY WITH OPERATOR SCREENING (AL, KY)	UEPRE	$21.00	NA	NA	$14.00	NA	NA	NA	NA	NA
2-WIRE COIN 2-WAY WITH OPERATOR SCREENING (GA)	UEPGC	NA	NA	$17.15	NA	NA	NA	NA	NA	NA
2-WIRE COIN 2-WAY WITH OPERATOR SCREENING (NC)	UEPNC	NA	NA	NA	NA	NA	NA	$17.50	NA	NA
2-WIRE COIN 2-WAY WITH OPERATOR SCREENING AND BLOCKING: 011, 900/976, 1+DDD (AL, KY, LA, MS, SC)	UEPRA	$21.00	NA	NA	$14.00	$17.50	$24.15	NA	$14.00	NA
2-WIRE COIN 2-WAY WITH OPERATOR SCREENING AND BLOCKING: 011, 900/976, 1+DDD (FL)	UEP2F	NA	$14.00	NA	NA	NA	NA	NA	NA	NA
2-WIRE COIN 2-WAY WITH OPERATOR SCREENING AND BLOCKING: 011, 900/976, 1+DDD (GA)	UEP2G	NA	NA	$17.15	NA	NA	NA	NA	NA	NA
2-WIRE COIN 2-WAY WITH OPERATOR SCREENING AND BLOCKING: 011, 900/976, 1+DDD; WITH DIALING PARITY (MS)	UEPMA	NA	NA	NA	NA	NA	$24.15	NA	NA	NA
2-WIRE COIN 2-WAY WITH OPERATOR SCREENING AND BLOCKING: 011, 900/976, 1+DDD (SC)	UEPSA	NA	NA	NA	NA	NA	NA	NA	$14.00	NA
2-WIRE COIN 2-WAY WITH OPERATOR SCREENING AND BLOCKING: 011, 900/976, 1+DDD (NC, TN)	UEPRP	NA	NA	NA	NA	NA	NA	$17.50	NA	$14.00
2-WIRE COIN 2-WAY WITH OPERATOR SCREENING AND 011 BLOCKING (AL, LA, MS)	UEPRB	$21.00	NA	NA	NA	$17.50	$24.15	NA	NA	NA

Exhibit 1
BellSouth/Access Integrated
UNE-P Coin Rates

Exhibit C

	USOC	AL	FL	GA	KY	LA	MS	NC	SC	TN
2-WIRE COIN 2-WAY WITH OPERATOR SCREENING AND 011 BLOCKING (FL)	UEPFA	NA	$14.00	NA	NA	NA	NA	NA	NA	NA
2-WIRE COIN 2-WAY WITH OPERATOR SCREENING AND 011 BLOCKING (GA)	UEPGA	NA	NA	$17.15	NA	NA	NA	NA	NA	NA
2-WIRE COIN 2-WAY WITH OPERATOR SCREENING AND 011 BLOCKING (KY)	UEPKA	NA	NA	NA	$14.00	NA	NA	NA	NA	NA
2-WIRE COIN 2-WAY WITH OPERATOR SCREENING AND 011 BLOCKING (SC)	UEPSH	NA	NA	NA	NA	NA	NA	NA	$14.00	NA
2-WIRE COIN 2-WAY WITH OPERATOR SCREENING AND 011 BLOCKING (NC)	UEPNB	NA	NA	NA	NA	NA	NA	$17.50	NA	NA
2-WIRE COIN 2-WAY WITH OPERATOR SCREENING AND 011 BLOCKING (TN)	UEPTA	NA	NA	NA	NA	NA	NA	NA	NA	$14.00
2-WIRE COIN 2-WAY WITH OPERATOR SCREENING AND 011 BLOCKING; WITH DIALING PARITY (MS)	UEPMB	NA	NA	NA	NA	NA	$24.15	NA	NA	NA
2-WIRE COIN 2-WAY WITH OPERATOR SCREENING AND 011 BLOCKING; WITH DIALING PARITY (SC)	UEPSC	NA	NA	NA	NA	NA	NA	NA	$14.00	NA
2-WIRE COIN 2-WAY WITH OPERATOR SCREENING AND 900/976 BLOCKING (GA)	UEPGB	NA	NA	$17.15	NA	NA	NA	NA	NA	NA
2-WIRE COIN 2-WAY WITH OPERATOR SCREENING AND BLOCKING: 900/976, 1+DDD, 011+, AND LOCAL (AL, KY, LA, MS)	UEPCD	$21.00	NA	NA	$14.00	$17.50	$24.15	NA	NA	NA
2-WIRE COIN 2-WAY WITH OPERATOR SCREENING AND BLOCKING: 900/976, 1+DDD, 011+, AND LOCAL (FL)	UEPCG	NA	$14.00	NA	NA	NA	NA	NA	NA	NA
2-WIRE COIN 2-WAY WITH OPERATOR SCREENING AND BLOCKING: 900/976, 1+DDD, 011+, AND LOCAL (GA)	UEPCH	NA	NA	$17.15	NA	NA	NA	NA	NA	NA
2-WIRE COIN 2-WAY WITH OPERATOR SCREENING AND BLOCKING: 900/976, 1+DDD, 011+, AND LOCAL (SC)	UEPCC	NA	NA	NA	NA	NA	NA	NA	$14.00	NA
2-WIRE COIN 2-WAY WITH OPERATOR SCREENING AND BLOCKING: 900/976, 1+DDD, 011+, AND LOCAL (NC, TN)	UEPCA	NA	NA	NA	NA	NA	NA	$17.50	NA	$14.00

Exhibit 1
BellSouth/Access Integrated
UNE-P Coin Rates

Exhibit C

	USOC	AL	FL	GA	KY	LA	MS	NC	SC	TN
2-WIRE COIN 2-WAY WITH OPERATOR SCREENING AND BLOCKING: 900/976, 1+DDD, 011+, AND LOCAL; ENHANCED CALLING OPT 3YV (SC)	UEPCE	NA	NA	NA	NA	NA	NA	NA	$14.00	NA
2-WIRE COIN 2-WAY WITH OPERATOR SCREENING AND BLOCKING: 900/976, 1+DDD, 011+, AND LOCAL; ENHANCED CALLING OPT AP7 (SC)	UEPCF	NA	NA	NA	NA	NA	NA	NA	$14.00	NA
2-WIRE COIN 2-WAY WITH OPERATOR SCREENING AND BLOCKING: 900/976, 1+DDD, 011+, AND LOCAL; WITH DIALING PARITY (MS)	UEPCJ	NA	NA	NA	NA	NA	$24.15	NA	NA	NA
2-WIRE COIN OUTWARD WITHOUT BLOCKING AND WITHOUT OPERATOR SCREENING (KY, LA, MS)	UEPRN	NA	NA	NA	$14.00	$17.50	$24.15	NA	NA	NA
2-WIRE COIN OUTWARD WITHOUT BLOCKING AND WITHOUT OPERATOR SCREENING (SC)	UEPSG	NA	NA	NA	NA	NA	NA	NA	$14.00	NA
2-WIRE COIN OUTWARD WITHOUT BLOCKING AND WITHOUT OPERATOR SCREENING; WITH DIALING PARITY (MS)	UEPME	NA	NA	NA	NA	NA	$24.15	NA	NA	NA
2-WIRE COIN OUTWARD WITH OPERATOR SCREENING AND 011 BLOCKING (GA, KY, MS)	UEPRJ	NA	NA	$17.15	$14.00	NA	$24.15	NA	NA	NA
2-WIRE COIN OUTWARD WITH OPERATOR SCREENING AND 011 BLOCKING (LA)	UEPLA	NA	NA	NA	NA	$17.50	NA	NA	NA	NA
2-WIRE COIN OUTWARD WITH OPERATOR SCREENING AND 011 BLOCKING (SC)	UEPSF	NA	NA	NA	NA	NA	NA	NA	$14.00	NA
2-WIRE COIN OUTWARD WITH OPERATOR SCREENING AND 011 BLOCKING (AL, FL)	UEPRK	$21.00	$14.00	NA	NA	NA	NA	NA	NA	NA
2-WIRE COIN OUTWARD WITH OPERATOR SCREENING AND 011 BLOCKING (NC)	UEPNE	NA	NA	NA	NA	NA	NA	$17.50	NA	NA
2-WIRE COIN OUTWARD WITH OPERATOR SCREENING AND 011 BLOCKING (TN)	UEPTC	NA	NA	NA	NA	NA	NA	NA	NA	$14.00

Exhibit C

	USOC	AL	FL	GA	KY	LA	MS	NC	SC	TN
2-WIRE COIN OUTWARD WITH OPERATOR SCREENING AND BLOCKING: 900/976, 1+DDD, 011+ (FL)	UEPOF	NA	$14.00	NA	NA	NA	NA	NA	NA	NA
2-WIRE COIN OUTWARD WITH OPERATOR SCREENING AND 011 BLOCKING; WITH DIALING PARITY (MS)	UEPMD	NA	NA	NA	NA	NA	$24.15	NA	NA	NA
2-WIRE COIN OUTWARD WITH OPERATOR SCREENING AND BLOCKING: 011, 900/976, 1+DDD (AL, KY, LA, MS)	UEPRH	$21.00	NA	NA	$14.00	$17.50	$24.15	NA	NA	NA
2-WIRE COIN OUTWARD WITH OPERATOR SCREENING AND BLOCKING: 011, 900/976, 1+DDD (SC)	UEPSJ	NA	NA	NA	NA	NA	NA	NA	$14.00	NA
2-WIRE COIN OUTWARD WITH OPERATOR SCREENING AND BLOCKING: 900/976, 1+DDD, 011+, AND LOCAL (AL, KY, LA, MS)	UEPCN	$21.00	NA	NA	$14.00	NA	$24.15	NA	NA	NA
2-WIRE COIN OUTWARD WITH OPERATOR SCREENING AND BLOCKING: 900/976, 1+DDD, 011+, AND LOCAL (FL, GA)	UEPCQ	NA	$14.00	$17.15	NA	NA	NA	NA	NA	NA
2-WIRE COIN OUTWARD WITH OPERATOR SCREENING AND BLOCKING: 900/976, 1+DDD, 011+, AND LOCAL (SC)	UEPCM	NA	NA	NA	NA	NA	NA	NA	$14.00	NA
2-WIRE COIN OUTWARD WITH OPERATOR SCREENING AND BLOCKING: 900/976, 1+DDD, 011+, AND LOCAL (NC)	UEPCL	NA	NA	NA	NA	NA	NA	$17.50	NA	NA
2-WIRE COIN OUTWARD WITH OPERATOR SCREENING AND BLOCKING: 900/976, 1+DDD, 011+, AND LOCAL (TN)	UEPOT	NA	NA	NA	NA	NA	NA	NA	NA	$14.00
2-WIRE COIN OUTWARD WITH OPERATOR SCREENING AND BLOCKING: 900/976, 1+DDD, 011+, AND LOCAL; WITH ENHANCED CALLING OPT 3YW (SC)	UEPCP	NA	NA	NA	NA	NA	NA	NA	$14.00	NA
2-WIRE COIN OUTWARD WITH OPERATOR SCREENING AND BLOCKING: 900/976, 1+DDD, 011+, AND LOCAL; WITH DAILING PARITY (MS)	UEPCS	NA	NA	NA	NA	NA	$24.15	NA	NA	NA
2.1.2 UNE 2-WIRE VOICE GRADE LOOPS (RCs)										
RC – 2-WIRE VOICE GRADE LOOP – STATEWIDE	UEPLX	NA	NA	NA	NA	NA	NA	$14.18	NA	NA

Exhibit C

	USOC	AL	FL	GA	KY	LA	MS	NC	SC	TN
RC – 2-WIRE VOICE GRADE LOOP – ZONE 1 (Note 14)	UEPLX	$14.35	$14.90	$10.80	$14.79	$14.05	$14.59	NA	$17.02	$12.48
RC – 2-WIRE VOICE GRADE LOOP – ZONE 2 (Note14)	UEPLX	$23.31	$18.51	$12.47	$27.68	$24.14	$19.33	NA	$25.66	$14.42
RC – 2-WIRE VOICE GRADE LOOP – ZONE 3 (Note 14)	UEPLX	$42.24	$24.25	$19.83	$47.78	$49.30	$27.63	NA	$33.99	$21.77
RC – 2-WIRE VOICE GRADE LOOP – ZONE 4 (Note 14)	UEPLX	NA	NA	NA	NA	NA	$36.47	NA	NA	NA
2.1.3 UNE COIN PORT/LOOP COMBINATION (RCs)										
RC – 2-WIRE VOICE GRADE LOOP WITH APPLICABLE UNE COIN PORT – STATEWIDE	Note 4	NA	NA	NA	NA	NA	NA	$31.68	NA	NA
RC – 2-WIRE VOICE GRADE LOOP WITH APPLICABLE UNE COIN PORT – ZONE 1	Note 4	$35.35	$28.90	$27.95	$28.79	$31.55	$38.74	NA	$31.02	$26.48
RC – 2-WIRE VOICE GRADE LOOP WITH APPLICABLE UNE COIN PORT – ZONE 2	Note 4	$44.31	$32.51	$29.62	$41.68	$41.64	$43.48	NA	$39.66	$28.42
RC – 2-WIRE VOICE GRADE LOOP WITH APPLICABLE UNE COIN PORT – ZONE 3	Note 4	$63.24	$38.25	$36.98	$61.78	$66.80	$51.78	NA	$47.99	$35.77
RC – 2-WIRE VOICE GRADE LOOP WITH APPLICABLE UNE COIN PORT – ZONE 4	Note 4	NA	NA	NA	NA	NA	$60.62	NA	NA	NA
2.1.4 ADDITIONAL UNE COIN PORT/LOOP (RCs)										
UNE COIN PORT/LOOP COMBO USAGE (FLAT RATE)	URECU	$1.56	$1.86	$3.59	$2.57	$1.81	$4.62	$3.70	$4.05	$3.45
2.2 NONRECURRING CHARGES (NRC)										
2.2.1 CURRENTLY COMBINED UNE COIN PORT/LOOP COMBO (NRCs) (Note 17)										
CONVERSION CHARGE – SWITCH AS IS – 1ST	USAC2	$41.50	$41.50	$41.50	$41.50	$41.50	$41.50	$41.50	$41.50	$41.50
CONVERSION CHARGE – SWITCH AS IS – ADD'L	USAC2	$41.50	$41.50	$41.50	$41.50	$41.50	$41.50	$41.50	$41.50	$41.50
CONVERSION CHARGE – SWITCH WITH CHANGE – 1ST	USACC	$41.50	$41.50	$41.50	$41.50	$41.50	$41.50	$41.50	$41.50	$41.50
CONVERSION CHARGE – SWITCH WITH CHANGE – ADD'L	USACC	$41.50	$41.50	$41.50	$41.50	$41.50	$41.50	$41.50	$41.50	$41.50

Exhibit C

	USOC	AL	FL	GA	KY	LA	MS	NC	SC	TN
2.2.2 NOT CURRENTLY COMBINED UNE COIN PORT/LOOP COMBO (NRCs)										
INSTALLATION CHARGE – 1ST	UEPRF	$90.00	NA	NA	$90.00	$90.00	$90.00	NA	NA	NA
INSTALLATION CHARGE – ADD'L	UEPRF	$50.00	NA	NA	$50.00	$50.00	$50.00	NA	NA	NA
INSTALLATION CHARGE – 1ST	UEPND	NA	NA	NA	NA	NA	NA	$90.00	NA	NA
INSTALLATION CHARGE – ADD'L	UEPND	NA	NA	NA	NA	NA	NA	$50.00	NA	NA
INSTALLATION CHARGE – 1ST	UEPSD	NA	NA	NA	NA	NA	NA	NA	$90.00	NA
INSTALLATION CHARGE – ADD'L	UEPSD	NA	NA	NA	NA	NA	NA	NA	$50.00	NA
INSTALLATION CHARGE – 1ST	UEPTB	NA	NA	NA	NA	NA	NA	NA	NA	$90.00
INSTALLATION CHARGE – ADD'L	UEPTB	NA	NA	NA	NA	NA	NA	NA	NA	$50.00
INSTALLATION CHARGE – 1ST	UEPMC	NA	NA	NA	NA	NA	$90.00	NA	NA	NA
INSTALLATION CHARGE – ADD'L	UEPMC	NA	NA	NA	NA	NA	$50.00	NA	NA	NA
INSTALLATION CHARGE – 1ST	UEPRE	$90.00	NA	NA	$90.00	NA	NA	NA	NA	NA
INSTALLATION CHARGE – ADD'L	UEPRE	$50.00	NA	NA	$50.00	NA	NA	NA	NA	NA
INSTALLATION CHARGE – 1ST	UEPGC	NA	NA	$90.00	NA	NA	NA	NA	NA	NA
INSTALLATION CHARGE – ADD'L	UEPGC	NA	NA	$50.00	NA	NA	NA	NA	NA	NA
INSTALLATION CHARGE – 1ST	UEPNC	NA	NA	NA	NA	NA	NA	$90.00	NA	NA
INSTALLATION CHARGE – ADD'L	UEPNC	NA	NA	NA	NA	NA	NA	$50.00	NA	NA
INSTALLATION CHARGE – 1ST	UEPRA	$90.00	NA	NA	$90.00	$90.00	$90.00	NA	$90.00	NA
INSTALLATION CHARGE – ADD'L	UEPRA	$50.00	NA	NA	$50.00	$50.00	$50.00	NA	$50.00	NA
INSTALLATION CHARGE – 1ST	UEP2F	NA	$90.00	NA	NA	NA	NA	NA	NA	NA
INSTALLATION CHARGE – ADD'L	UEP2F	NA	$50.00	NA	NA	NA	NA	NA	NA	NA
INSTALLATION CHARGE – 1ST	UEP2G	NA	NA	$90.00	NA	NA	NA	NA	NA	NA
INSTALLATION CHARGE – ADD'L	UEP2G	NA	NA	$50.00	NA	NA	NA	NA	NA	NA
INSTALLATION CHARGE – 1ST	UEPMA	NA	NA	NA	NA	NA	$90.00	NA	NA	NA
INSTALLATION CHARGE – ADD'L	UEPMA	NA	NA	NA	NA	NA	$50.00	NA	NA	NA
INSTALLATION CHARGE – 1ST	UEPSA	NA	NA	NA	NA	NA	NA	NA	$90.00	NA
INSTALLATION CHARGE – ADD'L	UEPSA	NA	NA	NA	NA	NA	NA	NA	$50.00	NA

Exhibit 1
BellSouth/Access Integrated
UNE-P Coin Rates

Exhibit C

	USOC	AL	FL	GA	KY	LA	MS	NC	SC	TN
INSTALLATION CHARGE – 1ST	UEPRP	NA	NA	NA	NA	NA	NA	$90.00	NA	$90.00
INSTALLATION CHARGE – ADD'L	UEPRP	NA	NA	NA	NA	NA	NA	$50.00	NA	$50.00
INSTALLATION CHARGE – 1ST	UEPRB	$90.00	NA	NA	NA	$90.00	$90.00	NA	NA	NA
INSTALLATION CHARGE – ADD'L	UEPRB	$50.00	NA	NA	NA	$50.00	$50.00	NA	NA	NA
INSTALLATION CHARGE – 1ST	UEPFA	NA	$90.00	NA	NA	NA	NA	NA	NA	NA
INSTALLATION CHARGE – ADD'L	UEPFA	NA	$50.00	NA	NA	NA	NA	NA	NA	NA
INSTALLATION CHARGE – 1ST	UEPGA	NA	NA	$90.00	NA	NA	NA	NA	NA	NA
INSTALLATION CHARGE – ADD'L	UEPGA	NA	NA	$50.00	NA	NA	NA	NA	NA	NA
INSTALLATION CHARGE – 1ST	UEPKA	NA	NA	NA	$90.00	NA	NA	NA	NA	NA
INSTALLATION CHARGE – ADD'L	UEPKA	NA	NA	NA	$50.00	NA	NA	NA	NA	NA
INSTALLATION CHARGE – 1ST	UEPSH	NA	NA	NA	NA	NA	NA	NA	$90.00	NA
INSTALLATION CHARGE – ADD'L	UEPSH	NA	NA	NA	NA	NA	NA	NA	$50.00	NA
INSTALLATION CHARGE – 1ST	UEPNB	NA	NA	NA	NA	NA	NA	$90.00	NA	NA
INSTALLATION CHARGE – ADD'L	UEPNB	NA	NA	NA	NA	NA	NA	$50.00	NA	NA
INSTALLATION CHARGE – 1ST	UEPTA	NA	NA	NA	NA	NA	NA	NA	NA	$90.00
INSTALLATION CHARGE – ADD'L	UEPTA	NA	NA	NA	NA	NA	NA	NA	NA	$50.00
INSTALLATION CHARGE – 1ST	UEPMB	NA	NA	NA	NA	NA	$90.00	NA	NA	NA
INSTALLATION CHARGE – ADD'L	UEPMB	NA	NA	NA	NA	NA	$50.00	NA	NA	NA
INSTALLATION CHARGE – 1ST	UEPSC	NA	NA	NA	NA	NA	NA	NA	$90.00	NA
INSTALLATION CHARGE – ADD'L	UEPSC	NA	NA	NA	NA	NA	NA	NA	$50.00	NA
INSTALLATION CHARGE – 1ST	UEPGB	NA	NA	$90.00	NA	NA	NA	NA	NA	NA
INSTALLATION CHARGE – ADD'L	UEPGB	NA	NA	$50.00	NA	NA	NA	NA	NA	NA
INSTALLATION CHARGE – 1ST	UEPCD	$90.00	NA	NA	$90.00	$90.00	$90.00	NA	NA	NA
INSTALLATION CHARGE – ADD'L	UEPCD	$50.00	NA	NA	$50.00	$50.00	$50.00	NA	NA	NA
INSTALLATION CHARGE – 1ST	UEPCG	NA	$90.00	NA	NA	NA	NA	NA	NA	NA
INSTALLATION CHARGE – ADD'L	UEPCG	NA	$50.00	NA	NA	NA	NA	NA	NA	NA
INSTALLATION CHARGE – 1ST	UEPCH	NA	NA	$90.00	NA	NA	NA	NA	NA	NA
INSTALLATION CHARGE – ADD'L	UEPCH	NA	NA	$50.00	NA	NA	NA	NA	NA	NA
INSTALLATION CHARGE – 1ST	UEPCC	NA	NA	NA	NA	NA	NA	NA	$90.00	NA

Exhibit 1
BellSouth/Access Integrated
UNE-P Coin Rates

Exhibit C

	USOC	AL	FL	GA	KY	LA	MS	NC	SC	TN
INSTALLATION CHARGE – ADD'L	UEPCC	NA	NA	NA	NA	NA	NA	NA	$50.00	NA
INSTALLATION CHARGE – 1ST	UEPCA	NA	NA	NA	NA	NA	NA	$90.00	NA	$90.00
INSTALLATION CHARGE – ADD'L	UEPCA	NA	NA	NA	NA	NA	NA	$50.00	NA	$50.00
INSTALLATION CHARGE – 1ST	UEPCE	NA	NA	NA	NA	NA	NA	NA	$90.00	NA
INSTALLATION CHARGE – ADD'L	UEPCE	NA	NA	NA	NA	NA	NA	NA	$50.00	NA
INSTALLATION CHARGE – 1ST	UEPCF	NA	NA	NA	NA	NA	NA	NA	$90.00	NA
INSTALLATION CHARGE – ADD'L	UEPCF	NA	NA	NA	NA	NA	NA	NA	$50.00	NA
INSTALLATION CHARGE – 1ST	UEPCJ	NA	NA	NA	NA	NA	$90.00	NA	NA	NA
INSTALLATION CHARGE – ADD'L	UEPCJ	NA	NA	NA	NA	NA	$50.00	NA	NA	NA
INSTALLATION CHARGE – 1ST	UEPRN	NA	NA	NA	$90.00	$90.00	$90.00	NA	NA	NA
INSTALLATION CHARGE – ADD'L	UEPRN	NA	NA	NA	$50.00	$50.00	$50.00	NA	NA	NA
INSTALLATION CHARGE – 1ST	UEPSG	NA	NA	NA	NA	NA	NA	NA	$90.00	NA
INSTALLATION CHARGE – ADD'L	UEPSG	NA	NA	NA	NA	NA	NA	NA	$50.00	NA
INSTALLATION CHARGE – 1ST	UEPME	NA	NA	NA	NA	NA	$90.00	NA	NA	NA
INSTALLATION CHARGE – ADD'L	UEPME	NA	NA	NA	NA	NA	$50.00	NA	NA	NA
INSTALLATION CHARGE – 1ST	UEPRJ	NA	NA	$90.00	$90.00	NA	$90.00	NA	NA	NA
INSTALLATION CHARGE – ADD'L	UEPRJ	NA	NA	$50.00	$50.00	NA	$50.00	NA	NA	NA
INSTALLATION CHARGE – 1ST	UEPLA	NA	NA	NA	NA	$90.00	NA	NA	NA	NA
INSTALLATION CHARGE – ADD'L	UEPLA	NA	NA	NA	NA	$50.00	NA	NA	NA	NA
INSTALLATION CHARGE – 1ST	UEPSF	NA	NA	NA	NA	NA	NA	NA	$90.00	NA
INSTALLATION CHARGE – ADD'L	UEPSF	NA	NA	NA	NA	NA	NA	NA	$50.00	NA
INSTALLATION CHARGE – 1ST	UEPRK	$90.00	$90.00	NA	NA	NA	NA	NA	NA	NA
INSTALLATION CHARGE – ADD'L	UEPRK	$50.00	$50.00	NA	NA	NA	NA	NA	NA	NA
INSTALLATION CHARGE – 1ST	UEPNE	NA	NA	NA	NA	NA	NA	$90.00	NA	NA
INSTALLATION CHARGE – ADD'L	UEPNE	NA	NA	NA	NA	NA	NA	$50.00	NA	NA
INSTALLATION CHARGE – 1ST	UEPTC	NA	NA	NA	NA	NA	NA	NA	NA	$90.00
INSTALLATION CHARGE – ADD'L	UEPTC	NA	NA	NA	NA	NA	NA	NA	NA	$50.00
INSTALLATION CHARGE – 1ST	UEPOF	NA	$90.00	NA	NA	NA	NA	NA	NA	NA
INSTALLATION CHARGE – ADD'L	UEPOF	NA	$50.00	NA	NA	NA	NA	NA	NA	NA

Exhibit C

	USOC	AL	FL	GA	KY	LA	MS	NC	SC	TN
INSTALLATION CHARGE – 1ST	UEPMD	NA	NA	NA	NA	NA	$90.00	NA	NA	NA
INSTALLATION CHARGE – ADD'L	UEPMD	NA	NA	NA	NA	NA	$50.00	NA	NA	NA
INSTALLATION CHARGE – 1ST	UEPRH	$90.00	NA	NA	$90.00	$90.00	$90.00	NA	NA	NA
INSTALLATION CHARGE – ADD'L	UEPRH	$50.00	NA	NA	$50.00	$50.00	$50.00	NA	NA	NA
INSTALLATION CHARGE – 1ST	UEPSJ	NA	NA	NA	NA	NA	NA	NA	$90.00	NA
INSTALLATION CHARGE – ADD'L	UEPSJ	NA	NA	NA	NA	NA	NA	NA	$50.00	NA
INSTALLATION CHARGE – 1ST	UEPCN	$90.00	NA	NA	$90.00	$90.00	$90.00	NA	NA	NA
INSTALLATION CHARGE – ADD'L	UEPCN	$50.00	NA	NA	$50.00	$50.00	$50.00	NA	NA	NA
INSTALLATION CHARGE – 1ST	UEPCQ	NA	$90.00	$90.00	NA	NA	NA	NA	NA	NA
INSTALLATION CHARGE – ADD'L	UEPCQ	NA	$50.00	$50.00	NA	NA	NA	NA	NA	NA
INSTALLATION CHARGE – 1ST	UEPCM	NA	NA	NA	NA	NA	NA	NA	$90.00	NA
INSTALLATION CHARGE – ADD'L	UEPCM	NA	NA	NA	NA	NA	NA	NA	$50.00	NA
INSTALLATION CHARGE – 1ST	UEPCL	NA	NA	NA	NA	NA	NA	$90.00	NA	NA
INSTALLATION CHARGE – ADD'L	UEPCL	NA	NA	NA	NA	NA	NA	$50.00	NA	NA
INSTALLATION CHARGE – 1ST	UEPOT	NA	NA	NA	NA	NA	NA	NA	NA	$90.00
INSTALLATION CHARGE – ADD'L	UEPOT	NA	NA	NA	NA	NA	NA	NA	NA	$50.00
INSTALLATION CHARGE – 1ST	UEPCP	NA	NA	NA	NA	NA	NA	NA	$90.00	NA
INSTALLATION CHARGE – ADD'L	UEPCP	NA	NA	NA	NA	NA	NA	NA	$50.00	NA
INSTALLATION CHARGE – 1ST	UEPCS	NA	NA	NA	NA	NA	$90.00	NA	NA	NA
INSTALLATION CHARGE – ADD'L	UEPCS	NA	NA	NA	NA	NA	$50.00	NA	NA	NA
2.2.3 ADDITIONAL NRCs (Note 17)										
SUBSEQUENT ACTIVITY (Note 13)	USAS2	$10.00	$10.00	$10.00	$10.00	$10.00	$10.00	$10.00	$10.00	$10.00
2.2.4 OSS NRCs (Note 17)										
OSS LSR CHARGE, ELECTRONIC, PER LSR RECEIVED FROM THE CLEC BY ONE OF THE OSS INTERACTIVE INTERFACES	SOMEC	$3.50	$2.75	$3.50	$3.50	$3.50	$3.50	$3.50	$3.50	$3.50
INCREMENTAL MANUAL SERVICE ORDER CHARGE – 1ST	SOMAN	$40.71	$21.56	$33.67	$19.99	$31.92	$43.52	$40.18	$43.19	$30.89

Exhibit C

	USOC	AL	FL	GA	KY	LA	MS	NC	SC	TN
INCREMENTAL MANUAL SERVICE ORDER CHARGE – ADD'L	SOMAN	$9.58	$21.56	$7.88	$19.99	$7.32	$9.99	$9.45	$9.91	$7.03
SUBSEQUENT DATABASE UPDATE - ELECTRONIC		$1.44	NA	NA	NA	$2.11	$2.87	$1.42	$0.71	$0.76
SUBSEQUENT DATABASE UPDATE – MANUAL SERVICE ORDER		$8.25	NA	NA	NA	$5.12	$6.88	$10.27	$8.91	$7.97
ELECTRONIC SERVICE ORDER DISCONNECT	SOMEC	NA	$0.42	NA	NA	NA	NA	NA	NA	NA
INCREMENTAL MANUAL SERVICE ORDER DISCONNECT	SOMAN	$20.00	$3.84	$20.00	$20.00	$20.00	$20.00	$20.00	$20.00	$20.00
3. ADDITIONAL USOCs										
(APPLICABLE IN ALL STATES) (Note 17)										
UNBUNDLED CONTACT NAME	UNECN	NA	NA	NA	NA	NA	NA	NA	NA	NA
NOTES:										
9. The UNE Coin Port rate within this section includes all available features in GA, KY and TN.										
10. Rates within this section apply for "Currently Combined" (and "Not Currently Combined" as noted in GA) UNE Coin Port/Loop Combinations ordered by the CLEC within all MSAs of the states listed to serve end users with less than four (4) DS0 equivalent lines; and for all MSAs of the states listed, except Orlando, Ft. Lauderdale, Miami, Atlanta, Greensboro-Winston Salem-Highpoint / Charlotte-Gastonia-Rock Hill, Nashville and New Orleans, to serve end users with four (4) or more DS0 equivalent lines.										
11. As clarification, the term Dialing Parity refers to the BellSouth local calling plans that BellSouth must provide to comply with local dialing parity. The CLEC may request such a local calling scope with its UNE port/loop combination by selecting the appropriate USOC.										
12. There is not a unique UNE Coin Port/Loop Combination USOC. The service is ordered by submitting the UNE Coin Port USOC.										
13. Subsequent Activity is charged for service order activity after the line has been established as a UNE Combination. This charge is in addition to other applicable NRCs, such as OSS charges and installation charges.										
14. This Amendment contains Deaveraged Loop Rates by Zone. Until approximately December 31, 2000 or until such time that BellSouth billing systems have been developed to handle the new zone rate structure, BellSouth will bill at the Zone 1 Deaveraged Loop rate level only. After December 31, 2000 or such time that the billing systems have been developed to handle the new zone rate structure, BellSouth will begin billing pursuant to CLEC-1's interconnection agreement.										
15. In Georgia the UNE Coin Port Recurring Rates within this section will apply for "Currently Combined" as well as "Not Currently Combined" Port/Loop Combinations except for the Atlanta MSA if the CLEC is serving an end user with four or more DS0 equivalent lines.										
16. The nonrecurring charges in this category apply to "Not Currently Combined" UNE Coin Port/Loop Combinations in GA only, except for the Atlanta MSA if the CLEC is serving an end user with four or more DS0 equivalent lines.										

17. The USOCs listed within this category will appear on the CLEC's bill with the charges listed but are not required on the Local Service Request (LSR) when ordering.
18. Rates within this section apply (1) if the CLEC is ordering a UNE Coin Port/loop Combination that is "Currently Combined" or "Not Currently Combined" to serve an end user with four or more DS0 equivalent lines in the Orlando, Ft. Lauderdale, Miami, Atlanta, Greensboro-Winston Salem-Highpoint / Charlotte-Gastonia-Rock Hill, Nashville or New Orleans MSAs or (2) if the CLEC is ordering a UNE Coin Port/loop Combination that is "Not Currently Combined" to serve an end user in any MSA in AL, FL, KY, LA, MS, NC, SC or TN.
19. The UNE Coin Port rate within this section includes all available features.
20. BellSouth currently is developing the billing capability to bill unbundled recurring port rates for this section 2.1.1. In the interim, BellSouth shall bill the recurring unbundled port rates listed in 1.1.1 of this Exhibit 1 and shall true-up the billing differences once the billing capability is developed.

SECOND AMENDMENT TO
INTERCONNECTION AGREEMENT BETWEEN
BELLSOUTH TELECOMMUNICATIONS, INC.
AND ACCESS INTEGRATED NETWORKS, INC.
DATED FEBRUARY 17, 2000

This Agreement (the "Amendment") is made and entered into between BellSouth Telecommunications, Inc. ("BellSouth") a Georgia corporation, and ACCESS Integrated Networks, Inc. ("ACCESS Integrated") a Georgia corporation.

WHEREAS, The Parties desire to amend that certain Interconnection Agreement between BellSouth and ACCESS Integrated dated February 17, 2000 (the "Interconnection Agreement") in order to incorporate rates established by the Tennessee Regulatory Authority ("TRA") in Docket Number 97-01262, on December 19, 2000, as amended by BellSouth's corrected submissions of January 31, 2001 and February 12, 2001;

NOW THEREFORE, in consideration of the mutual provisions contained herein and other good and valuable consideration, the receipt and sufficiency of which are hereby acknowledged, BellSouth and ACCESS Integrated hereby convenant and agree as follows:

1. Those permanent rates established by the TRA in Docket No. 97-01262 for certain Unbundled Network Elements and Local Interconnection in Tennessee are as set forth in Exhibit 1-TN attached hereto and incorporated herein by this reference.

2. To the extent that any product or service set forth in Exhibit 2-TN corresponds to a product or service set forth in the Interconnection Agreement, all rate elements and rates associated with such product or service in the Interconnection Agreement are hereby deleted and replaced with the corresponding rates and rate elements in Exhibit 1-TN.

3. Any rate element and rate for products or services in the Interconnection Agreement that is not expressly replaced by the rates and rate elements set forth in Exhibit 1-TN as described in paragraph 2 above shall remain in full force and effect in accordance with the terms of the Interconnection Agreement.

4. To the extent ACCESS Integrated and BellSouth have not previously negotiated terms and conditions corresponding to any rate element set forth in Exhibit 1-TN, then any Order for such element shall be provisioned in accordance to the terms and conditions set forth in the Competitive Local Exchange Carrier Tariff for the State of Tennessee, incorporated herein by this reference.

5. The Parties agree that all of the other provisions of the Interconnection Agreement, dated February 17, 2000, shall remain in full force and effect.

6. The Parties further agree that either or both of the Parties is authorized to submit this Amendment to the Tennessee Regulatory Authority or other regulatory body having jurisdiction over the subject matter of this Amendment, for approval subject to Section 252(e) of the federal Telecommunications Act of 1996.

This Amendment is made effective upon the date that it is signed by both Parties.

IN WITNESS WHEREOF, the parties hereto have caused this Amendment to be executed by their respective duly authorized representatives on the data indicated below.

BellSouth Telecommunications, Inc.	**ACCESS Integrated Networks, Inc.**
Signature on file	Signature on file
By: Patrick C. Finlen	By: William T. Wright
Title: Managing Director	Title: President
Date: May 2, 2001	Date: April 23, 2001

249606

2-WIRE ANALOG VOICE GRADE LOOP
4-WIRE ANALOG VOICE GRADE LOOP
2-WIRE ISDN DIGITAL GRADE LOOP
2-WIRE ASYMMETRICAL DIGITAL SUBSCRIBER LINE (ADSL) COMPATIBLE LOOP
2-WIRE HIGH BIT RATE DIGITAL SUBSCRIBER LINE (HDSL) COMPATIBLE LOO
4-WIRE HIGH BIT RATE DIGITAL SUBSCRIBER LINE (HDSL) COMPATIBLE LOOP
4-WIRE DS1 DIGITAL LOOP
4-WIRE 56 OR 64 KBPS DIGITAL GRADE LOOP
SUB-LOOP DISTRIBUTION
SUB-LOOP FEEDER
NETWORK INTERFACE DEVICE (NID)
UNBUNDLED LOOP CONCENTRATION
UNBUNDLED SUB-LOOP CONCENTRATION (OUTSIDE CO)
UNBUNDLED LOCAL EXCHANGE SWITCHING(PORTS)
UNBUNDLED LOCAL SWITCHING, PORT USAGE
COMMON TRANSPORT (SHARED)
INTEROFFICE CHANNEL - DEDICATED TRANSPORT - VOICE GRADE
INTEROFFICE CHANNEL - DEDICATED TRANSPORT- 56/64 KBPS
INTEROFFICE CHANNEL - DEDICATED TRANSPORT - DS1
LOCAL CHANNEL - DEDICATED TRANSPORT
MULTIPLEXERS
DARK FIBER
8XX ACCESS TEN DIGIT SCREENING
LINE INFORMATION DATA BASE ACCESS (LIDB)
SIGNALING (CCS7)
SELECTIVE ROUTING
AIN - BELLSOUTH AIN SMS ACCESS SERVICE
AIN - BELLSOUTH AIN TOOLKIT SERVICE
OPTIONAL DAILY USAGE FILE (ODUF)
UNBUNDLED PORT/LOOP COMBINATIONS - COST BASED RATES
2-WIRE VOICE GRADE LOOP WITH 2-WIRE LINE PORT (RES
2-WIRE VOICE GRADE LOOP WITH 2-WIRE LINE PORT (BUS)
2-WIRE VOICE GRADE LOOP WITH 2-WIRE LINE PORT (RES - PBX)
2-WIRE VOICE GRADE LOOP WITH 2-WIRE LINE PORT (BUS - PBX)
2-WIRE VOICE GRADE LOOP- BUS ONLY - WITH 2-WIRE DID TRUNK PORT
2-WIRE ISDN DIGITAL GRADE LOOP WITH 2-WIRE ISDN DIGITAL LINE SIDE PORT
4-WIRE DS1 DIGITAL LOOP WITH 4-WIRE ISDN DS1 DIGITAL TRUNK PORT
4-WIRE DS1 DIGITAL LOOP WITH 4-WIRE DDITS TRUNK PORT
2-WIRE VOICE GRADE EXTENDED LOOP WITH DEDICATED DS1 INTEROFFICE TRANSPORT (EEL)
4-WIRE VOICE GRADE EXTENDED LOOP WITH DEDICATED DS1 INTEROFFICE TRANSPORT (EEL)
4-WIRE 56 KBPS EXTENDED DIGITAL LOOP WITH DEDICATED DS1 INTEROFFICE TRANSPORT (EEL)
4-WIRE 64 KBPS EXTENDED DIGITAL LOOP WITH DEDICATED DS1 INTEROFFICE TRANSPORT (EEL)
2-WIRE VOICE GRADE DEDICATED EXTENDED LOCAL CHANNEL WITH DEDICATED DS1 INTEROFFICE TRANSPORT (EEL)
4-WIRE VOICE GRADE DEDICATED EXTENDED LOCAL CHANNEL WITH DEDICATED DS1 INTEROFFICE TRANSPORT (EEL)
4-WIRE DS1 DIGITAL EXTENDED LOOP WITH DEDICATED DS1 INTEROFFICE TRANSPORT (EEL)

		UNBUNDLED NETWORK ELEMENT	UNBUNDLED NETWORK ELEMENT AS STATED IN DOCKET 97-01262	Not in TRA Docket 97-01262	Zone	BCS	USOC	RATES					OSS RATES					
									Nonrecurring		Nonrecurring		Svc Order Submitted Elec per LSR	Svc Order Submitted Manually per LSR	Incremental Charge - Manual Svc Order vs. Electronic-1st	Incremental Charge - Manual Svc Order vs. Electronic-Add'l	Incremental Charge - Manual Svc Order vs. Electronic-Disc 1st	Incremental Charge - Manual Svc Order vs. Electronic-Disc Add'l
											Disconnect							
								Rec	First	Add'l	First	Add'l	SOMEC	SOMAN	SOMAN	SOMAN	SOMAN	SOMAN
ODUF/EDOUF/CMDS/CNAM-Resale																		
	OPTIONAL DAILY USAGE FILE (ODUF																	
		ODUF: Recording, per message	OSS OLEC Daily Usage File Recording per message				N/A	$0.0000044										
		ODUF: Message Processing, per message	OSS OLEC Daily Usage File Message Distribution per message				N/A	$0.0027366										
		ODUF: Message Processing, per Magnetic Tape provisioned	OSS OLEC Daily Usage File Message Distribution per magnetic tape provisioned				N/A	$52.75										
		ODUF: Data Transmission (CONNECT:DIRECT), per message	OSS OLEC Daily Usage File Data Transmission (Connect: Direct), per message				N/A	$0.0000339										

		UNBUNDLED NETWORK ELEMENT	UNBUNDLED NETEORK ELEMENT AS STATED IN DOCKET 97-01262	Not in TRA Docket 97-01262	Zone	BCS	USOC	RATES					OSS RATES					
									Nonrecurring		Nonrecurring Disconnect		Svc Order Submitted Elec per LSR	Svc Order Submitted Manually per LSR	Incremental Charge - Manual Svc Order vs. Electronic-1st	Incremental Charge - Manual Svc Order vs. Electronic-Add'l	Incremental Charge - Manual Svc Order vs. Electronic-Disc 1st	Incremental Charge - Manual Svc Order vs. Electronic-Disc Add'l
								Rec	First	Add'l	First	Add'l	SOMEC	SOMAN	SOMAN	SOMAN	SOMAN	SOMAN
		Geographically Deaveraged UNE Zones and applicable rates have been established for certain services, as shown in this Agreement. Where Geographically Deaveraged UNE Zones and applicable rates are established, Statewide rates are obsolete. Further, BellSouth is in the process of enhancing its billing systems in order to accomodate this Geographically Deaveraged UNE Zone Rate Structure. Until these enhancements are accomplished, the UNE Zone 1 rate will be billed for all services residing in Zones 1, 2, 3 or 4, i.e., once billing enhancements are complete, all applicable UNE Zone rates reflected in this Agreement will be billed. Reference Internet Website http://www.interconnection.bellsouth.com/become_clec/ docs/interconnection/deavuzns.pdf to view Geographically Deaveraged UNE Zone Designations by Central Office.																
UNBUNDLED EXCHANGE ACCESS LOOP																		
	2-WIRE ANALOG VOICE GRADE LOOP																	
		2-Wire Analog Voice Grade Loop - Service Level 1- Zone 1	2-Wire Analog Voice Grade Loop - Service Level 1 - Zone 1		1	UEANL	UEAL2	$13.19	$31.99	$20.02	$10.65	$1.41			$20.35	$10.54	$13.32	
		2-Wire Analog Voice Grade Loop - Service Level 1- Zone 2	2-Wire Analog Voice Grade Loop - Service Level 1 - Zone 2		2	UEANL	UEAL2	$17.23	$31.99	$20.02	$10.65	$1.41			$20.35	$10.54	$13.32	
		2-Wire Analog Voice Grade Loop - Service Level 1- Zone 3	2-Wire Analog Voice Grade Loop - Service Level 1 - Zone 3		3	UEANL	UEAL2	$22.53	$31.99	$20.02	$10.65	$1.41			$20.35	$10.54	$13.32	
		Manual Order Coordination for UVL-SL1s (per loop)*	2-WAVGL - SL1 - Manual Order Coordination			UEANL	UEAMC		$36.52	$36.52	$9.18	$9.18						
		Order Coordination for Specified Conversion Time for UVL-SL1 (per LSR) *	2-WAVGL - SL1 - Order Coordination for Specified Conversion Time			UEANL	OCOSL		$34.29	$34.29								
		2-Wire Analog Voice Grade Loop - Service Level 2 w/Loop or Ground Start Signaling - Zone 1	2-Wire Analog Voice Grade Loop - Service Level 2 - Zone 1		1	UEA	UEAL2	$16.56	$75.06	$48.20	$28.70	$17.64			$20.35	$10.54	$13.32	
		2-Wire Analog Voice Grade Loop - Service Level 2 w/Loop or Ground Start Signaling - Zone 2	2-Wire Analog Voice Grade Loop - Service Level 2 - Zone 2		2	UEA	UEAL2	$21.63	$75.06	$48.20	$28.70	$17.64			$20.35	$10.54	$13.32	
		2-Wire Analog Voice Grade Loop - Service Level 2 w/Loop or Ground Start Signaling - Zone 3	2-Wire Analog Voice Grade Loop - Service Level 2 - Zone 3		3	UEA	UEAL2	$28.28	$75.06	$48.20	$28.70	$17.64			$20.35	$10.54	$13.32	
		Order Coordination for Specified Conversion Time (per LSR)	2-WAVGL - SL2 - Order Coordination for Specified Conversion Time			UEA	OCOSL		$34.29	$34.29								
		2-Wire Analog Voice Grade Loop - Service Level 2 w/Reverse Battery Signaling - Zone 1	2-Wire Analog Voice Grade Loop - Service Level 2 - Zone 1		1	UEA	UEAR2	$16.56	$75.06	$48.20	$28.70	$17.64			$20.35	$10.54	$13.32	
		2-Wire Analog Voice Grade Loop - Service Level 2 w/Reverse Battery Signaling - Zone 2	2-Wire Analog Voice Grade Loop - Service Level 2 - Zone 2		2	UEA	UEAR2	$21.63	$75.06	$48.20	$28.70	$17.64			$20.35	$10.54	$13.32	
		2-Wire Analog Voice Grade Loop - Service Level 2 w/Reverse Battery Signaling - Zone 3	2-Wire Analog Voice Grade Loop - Service Level 2 - Zone 3		3	UEA	UEAR2	$28.28	$75.06	$48.20	$28.70	$17.64			$20.35	$10.54	$13.32	
		Order Coordination for Specified Conversion Time (per LSR)	2-WAVGL - SL2 - Order Coordination for Specified Conversion Time			UEA	OCOSL		$34.29	$34.29								
	4-WIRE ANALOG VOICE GRADE LOOP																	

UNBUNDLED NETWORK ELEMENT	UNBUNDLED NETEORK ELEMENT AS STATED IN DOCKET 97-01262	Not in TRA Docket 97-01262	Zone	BCS	USOC	RATES					OSS RATES					
							Nonrecurring		Nonrecurring Disconnect		Svc Order Submitted Elec per LSR	Svc Order Submitted Manually per LSR	Incremental Charge - Manual Svc Order vs. Electronic-1st	Incremental Charge - Manual Svc Order vs. Electronic-Add'l	Incremental Charge - Manual Svc Order vs. Electronic-Disc 1st	Incremental Charge - Manual Svc Order vs. Electronic-Disc Add'l
						Rec	First	Add'l	First	Add'l	SOMEC	SOMAN	SOMAN	SOMAN	SOMAN	SOMAN
4-Wire Analog Voice Grade Loop - Zone 1	4-Wire Analog Voice Grade Loop - Zone 1		1	UEA	UEAL4	$24.70	$122.76	$85.57	$76.35	$39.16			$20.35	$10.54	$13.32	
4-Wire Analog Voice Grade Loop - Zone 2	4-Wire Analog Voice Grade Loop - Zone 2		2	UEA	UEAL4	$32.25	$122.76	$85.57	$76.35	$39.16			$20.35	$10.54	$13.32	
4-Wire Analog Voice Grade Loop - Zone 3	4-Wire Analog Voice Grade Loop - Zone 3		3	UEA	UEAL4	$42.17	$122.76	$85.57	$76.35	$39.16			$20.35	$10.54	$13.32	
Order Coordination for Specified Conversion Time (per LSR)	4-Wire AVGL - Order Coordination for Specified Conversion Time			UEA	OCOSL		$34.29	$34.29								
2-WIRE ISDN DIGITAL GRADE LOOP																
2-Wire ISDN Digital Grade Loop - Zone 1	2-Wire ISDN Digital Grade Loop - Zone 1		1	UDN	U1L2X	$22.00	$142.76	$88.88	$76.35	$39.16			$20.35	$10.54	$13.32	
2-Wire ISDN Digital Grade Loop - Zone 2	2-Wire ISDN Digital Grade Loop - Zone 2		2	UDN	U1L2X	$29.02	$142.76	$88.88	$76.35	$39.16			$20.35	$10.54	$13.32	
2-Wire ISDN Digital Grade Loop - Zone 3	2-Wire ISDN Digital Grade Loop - Zone 3		3	UDN	U1L2X	$37.95	$142.76	$88.88	$76.35	$39.16			$20.35	$10.54	$13.32	
Order Coordination For Specified Conversion Time (per LSR)	2-Wire ISDN Digital Grade Loop - Order Coordination for Specified Conversion Time			UDN	OCOSL		$34.29	$34.29								
2-WIRE ASYMMETRICAL DIGITAL SUBSCRIBER LINE (ADSL) COMPATIBLE LOOP																
2-Wire ADSL Compatible Loop **ncluding** Man Svc Inquiry and Facility Reservation - Zone 1	2-Wire ADSL Compatible Loop - Zone 1		1	UAL	UAL2X	$13.82	$270.01	$234.63	$74.54	$39.14			$20.35	$10.54	$13.32	
2-Wire ADSL Compatible Loop **ncluding** Man Svc Inquiry and Facility Reservation - Zone 2	2-Wire ADSL Compatible Loop - Zone 2		2	UAL	UAL2X	$18.05	$270.01	$234.63	$74.54	$39.14			$20.35	$10.54	$13.32	
2-Wire ADSL Compatible Loop **ncluding** Man Svc Inquiry and Facility Reservation - Zone 3	2-Wire ADSL Compatible Loop - Zone 3		3	UAL	UAL2X	$23.60	$270.01	$234.63	$74.54	$39.14			$20.35	$10.54	$13.32	
Order Coordination for Specified Conversion Time	2-Wire ADSL Digital Grade Loop - Order Coordination for Specified Conversion Time			UAL	OCOSL		$34.29	$34.29								
2-WIRE HIGH BIT RATE DIGITAL SUBSCRIBER LINE (HDSL) COMPATIBLE LOO																
2-Wire HDSL Compatible Loop **including** manual service inquiry and facility reservation - Zone 1	2-Wire High Bit Rate DSL Compatible Loop - Zone 1		1	UHL	UHL2X	$10.83	$270.01	$234.63	$74.54	$39.14			$20.35	$10.54	$13.32	
2-Wire HDSL Compatible Loop **including** manual service inquiry and facility reservation - Zone 2	2-Wire High Bit Rate DSL Compatible Loop - Zone 2		2	UHL	UHL2X	$14.15	$270.01	$234.63	$74.54	$39.14			$20.35	$10.54	$13.32	
2-Wire HDSL Compatible Loop **including** manual service inquiry and facility reservation - Zone 3	2-Wire High Bit Rate DSL Compatible Loop - Zone 3		3	UHL	UHL2X	$18.50	$270.01	$234.63	$74.54	$39.14			$20.35	$10.54	$13.32	
Order Coordination for Specified Conversion Time	2-Wire HDSL Loop - Order Coordination for Specified Conversion Time			UHL	OCOSL		$34.29	$34.29								
4-WIRE HIGH BIT RATE DIGITAL SUBSCRIBER LINE (HDSL) COMPATIBLE LOOP																
4-Wire HDSL Compatible Loop **including** manual service inquiry and facility reservation - Zone 1	4-Wire HDSL Compatible Loop - Zone 1		1	UHL	UHL4X	$13.93	$279.60	$244.22	$74.54	$39.14			$20.35	$10.54	$13.32	
4-Wire HDSL Compatible Loop **including** manual service inquiry and facility reservation - Zone 2	4-Wire HDSL Compatible Loop - Zone 2		2	UHL	UHL4X	$18.20	$279.60	$244.22	$74.54	$39.14			$20.35	$10.54	$13.32	
4-Wire HDSL Compatible Loop **including** manual service inquiry and facility reservation - Zone 3	4-Wire HDSL Compatible Loop - Zone 3		3	UHL	UHL4X	$23.80	$279.60	$244.22	$74.54	$39.14			$20.35	$10.54	$13.32	

UNBUNDLED NETWORK ELEMENT	UNBUNDLED NETEORK ELEMENT AS STATED IN DOCKET 97-01262	Not in TRA Docket 97-01262	Zone	BCS	USOC	RATES					OSS RATES					
							Nonrecurring		Nonrecurring Disconnect		Svc Order Submitted Elec per LSR	Svc Order Submitted Manually per LSR	Incremental Charge - Manual Svc Order vs. Electronic-1st	Incremental Charge - Manual Svc Order vs. Electronic-Add'l	Incremental Charge - Manual Svc Order vs. Electronic-Disc 1st	Incremental Charge - Manual Svc Order vs. Electronic-Disc Add'l
						Rec	First	Add'l	First	Add'l	SOMEC	SOMAN	SOMAN	SOMAN	SOMAN	SOMAN
Order Coordination for Specified Conversion Time	4-Wire HDSL Loop Order Coordination for Specified Conversion Time			UHL	OCOSL		$34.29	$34.29								
4-WIRE DS1 DIGITAL LOOP																
4-Wire DS1 Digital Loop - Zone 1	4-Wire DS1 Digital Loop - Zone 1		1	USL	USLXX	$57.73	$313.08	$219.72	$96.86	$40.45			$18.98	$8.43	$11.95	$0.00
4-Wire DS1 Digital Loop - Zone 2	4-Wire DS1 Digital Loop - Zone 2		2	USL	USLXX	$75.40	$313.08	$219.72	$96.86	$40.45			$18.98	$8.43	$11.95	$0.00
4-Wire DS1 Digital Loop - Zone 3	4-Wire DS1 Digital Loop - Zone 3		3	USL	USLXX	$98.59	$313.08	$219.72	$96.86	$40.45			$18.98	$8.43	$11.95	$0.00
Order Coordination for Specified Conversion Time	4-Wire DS1 Loop - Order Coordination for Specified Conversion Time			USL	OCOSL		$34.59	$34.59								
4-WIRE 56 OR 64 KBPS DIGITAL GRADE LOOP																
4-Wire 56 Kbps Digital Grade Loop - Zone 1	4-Wire 56 or 64 Kbps Digital Grad Loop - Zone 1		1	UDL	UDL56	$31.10	$207.01	$141.38	$90.70	$44.18			$20.35	$10.54	$13.32	
4-Wire 56 Kbps Digital Grade Loop - Zone 2	4-Wire 56 or 64 Kbps Digital Grad Loop - Zone 2		2	UDL	UDL56	$40.61	$207.01	$141.38	$90.70	$44.18			$20.35	$10.54	$13.32	
4-Wire 56 Kbps Digital Grade Loop - Zone 3	4-Wire 56 or 64 Kbps Digital Grad Loop - Zone 3		3	UDL	UDL56	$53.11	$207.01	$141.38	$90.70	$44.18			$20.35	$10.54	$13.32	
Order Coordination for Specified Conversion Time	4-Wire 56/64 kbps Dig. GL - Orde Coordination for Specified Conversion Time			UDL	OCOSL		$34.29	$34.29								
4-Wire 64 Kbps Digital Grade Loop - Zone 1	4-Wire 56 or 64 Kbps Digital Grad Loop - Zone 1		1	UDL	UDL64	$31.10	$207.01	$141.38	$90.70	$44.18			$20.35	$10.54	$13.32	
4-Wire 64 Kbps Digital Grade Loop - Zone 2	4-Wire 56 or 64 Kbps Digital Grad Loop - Zone 2		2	UDL	UDL64	$40.61	$207.01	$141.38	$90.70	$44.18			$20.35	$10.54	$13.32	
4-Wire 64 Kbps Digital Grade Loop - Zone 3	4-Wire 56 or 64 Kbps Digital Grad Loop - Zone 3		3	UDL	UDL64	$53.11	$207.01	$141.38	$90.70	$44.18			$20.35	$10.54	$13.32	
Order Coordination for Specified Conversion Time	4-Wire 56/64 kbps Dig. GL - Orde Coordination for Specified Conversion Time			UDL	OCOSL		$34.29	$34.29								
SUB-LOOPS																
Sub-Loop Distribution																
Sub-Loop - Per Cross Box Location - CLEC Feeder Facility Set-Up		*		UEANL	USBSA		$517.25	$517.25					$20.35	$10.54	$13.32	
Sub-Loop - Per Cross Box Location - Per 2 Pair Panel Set-Up		*		UEANL	USBSB		$42.68	$42.68					$20.35	$10.54	$13.32	
Sub-Loop Distribution Per 2-Wire Analo Voice Grade Loop - Statewide	Loop Distribution - per 2-WAVGL		sw	UEANL	USBN2	$10.02	$148.84	$112.34	$73.14	$36.65			$20.35	$10.54	$13.32	
Sub-Loop Distribution - Order Coordinatior per sub-loop pair		*		UEANL	USBMC		$36.52									
Sub-Loop Distribution - Order Coordination for Specified Time Conversion, per LSR	Sub-Loop Distribution - Orde Coordination for Specified Conversion Time			UEANL	OCOSL		$34.29									
Sub-Loop Feeder																
DS0 Set-up per Cross Box location - CLEC Distribution Facility set-up *(or access to Feeder)*		*		UEA, UDN,U CL,UDL	USBFW		$517.25	$517.25					$20.35	$10.54	$13.32	

UNBUNDLED NETWORK ELEMENT	UNBUNDLED NETEORK ELEMENT AS STATED IN DOCKET 97-01262	Not in TRA Docket 97-01262	Zone	BCS	USOC	RATES					OSS RATES					
							Nonrecurring		Nonrecurring Disconnect		Svc Order Submitted Elec per LSR	Svc Order Submitted Manually per LSR	Incremental Charge - Manual Svc Order vs. Electronic-1st	Incremental Charge - Manual Svc Order vs. Electronic-Add'l	Incremental Charge - Manual Svc Order vs. Electronic-Disc 1st	Incremental Charge - Manual Svc Order vs. Electronic-Disc Add'l
						Rec	First	Add'l	First	Add'l	SOMEC	SOMAN	SOMAN	SOMAN	SOMAN	SOMAN
DS0 Set-up per Cross Box location - per 25 pair pasnel set-up (*or access to Feeder*)		*		UEA, UDN,UCL,UDL	USBFX		$42.68	$42.68					$20.35	$10.54	$13.32	
Sub-Loop Feeder- Per 2-Wire Analog Voice Grade Ground-Start Loop - Statewide	Loop Feeder per 2-WAVGL		sw	UEA	USBFA	$12.05	$122.24	$85.05	$76.35	$39.16			$20.35	$10.54	$13.32	
Sub-Loop Feeder- Per 2-Wire Analog Voice Grade Loop-Start Loop - Statewide	Loop Feeder per 2-WAVGL		sw	UEA	USBFB	$12.05	$122.24	$85.05	$76.35	$39.16			$20.35	$10.54	$13.32	
Sub-Loop Feeder - Per 2-Wire Analog Voice Grade Reverse Battery Loop - Statewide	Loop Feeder per 2-WAVGL		sw	UEA	USBFC	$12.05	$122.24	$85.05	$76.35	$39.16			$20.35	$10.54	$13.32	
Sub-Loop Feeder - Order Coordination for Specified Conversion Time, per LSR	Sub-Loop Feeder - Order Coordination for Specified Conversion Time			UEA	OCOSL		$34.29									
Network Interface Device (NID)																
Network Interface Device Cross Connect	NID per 2-Wire Loop			UENTW	UNDC2	$1.15	$0.74				$3.50		$19.99	$19.99	$19.99	$19.99
Network Interface Device Cross Connect	NID per 4-Wire Loop			UENTW	UNDC4	$1.27	$0.74				$3.50		$19.99	$19.99	$19.99	$19.99
UNBUNDLED LOOP CONCENTRATION																
Loop Channelization System	Loop Channelization system - DLC (Inside CO)			ULC	ULCCS	$307.07	$307.34	$74.37	$4.18		$3.50		$20.35	$10.54	$13.32	
CO Channel Interface - 2-Wire Voice Grade	CO Channel Interface - 2-Wire Voice Grade			ULC	ULCC2	$1.20	$9.57	$9.52	$8.66	$8.60	$3.50		$20.35	$10.54	$13.32	
Unbundled Loop Concentration - Channe Interface-2 Wire Voice-Loop Start or Ground Start	CO Channel Interface - 2-Wire Voice Grade			UEA	ULCC2	$1.20	$9.57	$9.52	$8.66	$8.60	$3.50		$20.35	$10.54	$13.32	
UNBUNDLED SUB-LOOP CONCENTRATION (OUTSIDE CO)																
Loop Concentration - Channelization System	Loop Concentration - Channelization System (Outside CO)			TBD	UCT8A	$328.28	$651.09	$283.42	$207.92	$50.94	$3.50		$20.35	$10.54	$13.32	
Remote Channel Interface - 2-Wire Voice Grade Loop	Loop Concentration - Remote Channel Interface - 2-WAVGL (Outside CO)			TBD	ULCC2	$0.88	$9.43	$9.40	$4.71	$4.70	$3.50		$20.35	$10.54	$13.32	
Loop Concentration - Remote termina Cabinet (Outside CO)	Loop Concentration - Remote Terminal Cabinet (Outside CO)					ICB					$3.50					
Channel Interface - 2 Wire Voice-Loop Start or Ground Start	Loop Concentration - Remote Channel Interface - 2-WAVGL (Outside CO)			TBD	ULCC2	$0.88	$9.43	$9.40	$4.71	$4.70	$3.50		$20.35	$10.54	$13.32	
UNBUNDLED LOCAL EXCHANGE SWITCHING(PORTS)																
Exchange Ports																
Exchange Ports - 2-Wire Analog Line Port-Res.	Exchange Ports - 2-Wire Analog Line Port (Res./Bus.)			UEPSR	UEPRL	$1.89	$9.93	$9.19	$3.66	$2.92			$20.35	$10.54	$13.32	$1.40
Note: Although the Port rate includes all available vertical features in TN, the desired feature(s) will need to be ordered.)																
Exchange Ports - 2-Wire Analog Line Port with Caller ID - Res.	Exchange Ports - 2-Wire Analog Line Port (Res./Bus.)			UEPSR	UEPRC	$1.89	$9.93	$9.19	$3.66	$2.92			$20.35	$10.54	$13.32	$1.40
Exchange Ports - 2-Wire Analog Line Port outgoing only - Res.	Exchange Ports - 2-Wire Analog Line Port (Res./Bus.)			UEPSR	UEPRO	$1.89	$9.93	$9.19	$3.66	$2.92			$20.35	$10.54	$13.32	$1.40

		UNBUNDLED NETWORK ELEMENT	UNBUNDLED NETEORK ELEMENT AS STATED IN DOCKET 97-01262	Not in TRA Docket 97-01262	Zone	BCS	USOC	RATES					OSS RATES					
									Nonrecurring		Nonrecurring Disconnect		Svc Order Submitted Elec per LSR	Svc Order Submitted Manually per LSR	Incremental Charge - Manual Svc Order vs. Electronic-1st	Incremental Charge - Manual Svc Order vs. Electronic-Add'l	Incremental Charge - Manual Svc Order vs. Electronic-Disc 1st	Incremental Charge - Manual Svc Order vs. Electronic-Disc Add'l
								Rec	First	Add'l	First	Add'l	SOMEC	SOMAN	SOMAN	SOMAN	SOMAN	SOMAN
		Exchange Ports - 2-Wire VG unbundled TI extended local dialing parity Port with Caller ID - Res.	Exchange Ports - 2-Wire Analog Line Port (Res./Bus.)			UEPSR	UEPAQ	$1.89	$9.93	$9.19	$3.66	$2.92			$20.35	$10.54	$13.32	$1.40
		Exchange Ports - 2-Wire VG unbundle Tennessee Area Calling port with Caller ID - Res (F2R)	Exchange Ports - 2-Wire Analog Line Port (Res./Bus.)			UEPSR	UEPAK	$1.89	$9.93	$9.19	$3.66	$2.92			$20.35	$10.54	$13.32	$1.40
		Exchange Ports - 2-Wire VG unbundle Tennessee Area Calling port with Caller ID - Res (TACER)	Exchange Ports - 2-Wire Analog Line Port (Res./Bus.)			UEPSR	UEPAL	$1.89	$9.93	$9.19	$3.66	$2.92			$20.35	$10.54	$13.32	$1.40
		Exchange Ports - 2-Wire VG unbundle Tennessee Area Calling port with Caller ID - Res (TACSR)	Exchange Ports - 2-Wire Analog Line Port (Res./Bus.)			UEPSR	UEPAM	$1.89	$9.93	$9.19	$3.66	$2.92			$20.35	$10.54	$13.32	$1.40
		Exchange Ports - 2-Wire VG unbundle Tennessee Area Calling port with Caller ID - Res (1MF2X)	Exchange Ports - 2-Wire Analog Line Port (Res./Bus.)			UEPSR	UEPAN	$1.89	$9.93	$9.19	$3.66	$2.92			$20.35	$10.54	$13.32	$1.40
		Exchange Ports - 2-Wire VG unbundle Tennessee Area Calling port with Caller ID - Res (2MR)	Exchange Ports - 2-Wire Analog Line Port (Res./Bus.)			UEPSR	UEPAO	$1.89	$9.93	$9.19	$3.66	$2.92			$20.35	$10.54	$13.32	$1.40
		Exchange Ports - 2-Wire VG unbundled res low usage line port with Caller ID (LUM)	Exchange Ports - 2-Wire Analog Line Port (Res./Bus.)			UEPSR	UEPAP	$1.89	$9.93	$9.19	$3.66	$2.92			$20.35	$10.54	$13.32	$1.40
		Subsequent Activity		*		UEPSR	USASC		$10.00	$10.00								
		All Available Vertical Features	[Exchange Ports includes al Applicable Features.]			UEPSR	UEPVF	$0.00	$0.00	$0.00								
		Exchange Ports - 2-Wire Analog Line Por without Caller ID - Bus	Exchange Ports - 2-Wire Analog Line Port (Res./Bus.)			UEPSB	UEPBL	$1.89	$9.93	$9.19	$3.66	$2.92			$20.35	$10.54	$13.32	$1.40
		Exchange Ports - 2-Wire VG unbundled Lin Port with unbundled port with Caller+E484 II - Bus.	Exchange Ports - 2-Wire Analog Line Port (Res./Bus.)			UEPSB	UEPBC	$1.89	$9.93	$9.19	$3.66	$2.92			$20.35	$10.54	$13.32	$1.40
		Exchange Ports - 2-Wire Analog Line Por outgoing only - Bus.	Exchange Ports - 2-Wire Analog Line Port (Res./Bus.)			UEPSB	UEPBO	$1.89	$9.93	$9.19	$3.66	$2.92			$20.35	$10.54	$13.32	$1.40
		Exchange Ports - 2-Wire VG unbundled TI extended local dialing parity Port with Caller ID - Bus.	Exchange Ports - 2-Wire Analog Line Port (Res./Bus.)			UEPSB	UEPAV	$1.89	$9.93	$9.19	$3.66	$2.92			$20.35	$10.54	$13.32	$1.40
		Exhange Ports - 2-Wire VG unbundle incoming only port with Caller ID - Bus	Exchange Ports - 2-Wire Analog Line Port (Res./Bus.)			UEPSB	UEPB1	$1.89	$9.93	$9.19	$3.66	$2.92			$20.35	$10.54	$13.32	$1.40
		Exchange Ports - 2-Wire VG unbundled TI Bus 2-Way Area Calling Port Economy Option - Bus (TACC1)	Exchange Ports - 2-Wire Analog Line Port (Res./Bus.)			UEPSB	UEPAC	$1.89	$9.93	$9.19	$3.66	$2.92			$20.35	$10.54	$13.32	$1.40
		Exchange Ports - 2-Wire VG unbundled TI Bus 2-Way Area Calling Port Standard Option - Bus (TACC2)	Exchange Ports - 2-Wire Analog Line Port (Res./Bus.)			UEPSB	UEPAD	$1.89	$9.93	$9.19	$3.66	$2.92			$20.35	$10.54	$13.32	$1.40
		Exchange Ports-2-Wire VG unbundled TI Bus 2-Way Collierville & Memphis Local Calling Port-Bus (B2F)	Exchange Ports - 2-Wire Analog Line Port (Res./Bus.)			UEPSB	UEPAE	$1.89	$9.93	$9.19	$3.66	$2.92			$20.35	$10.54	$13.32	$1.40
		Subsequent Activity		*		UEPSB	USASC		$10.00	$10.00								
		All Available Vertical Features	[Exchange Ports includes al Applicable Features.]			UEPSB	UEPVF	$0.00	$0.00	$0.00								
		Exchange Ports - 4-Wire Analog Voice Grade Port	Exchange Ports - 4-Wire Analog Voice Grade Port				UEP4A	$8.27	$9.93	$9.19	$3.66	$2.92			$20.35	$10.54	$13.32	$1.40
		Subsequent Activity		*			USASC		$10.00	$10.00								
		All Available Vertical Features	[Exchange Ports includes al Applicable Features.]				UEPVF	$0.00	$0.00	$0.00								
		Exchange Ports - 2-Wire DID Port	Exchange Ports - 2-Wire DID Port			UEPEX	UEPP2	$8.97	$47.75	$47.01	$9.21	$8.47			$20.35	$10.54	$13.32	$1.40
		Subsequent Activity		*		UEPEX	USASC		$10.00	$10.00								
		All Available Vertical Features	[Exchange Ports includes al Applicable Features.]			UEPEX	UEPVF	$0.00	$0.00	$0.00								

UNBUNDLED NETWORK ELEMENT	UNBUNDLED NETEORK ELEMENT AS STATED IN DOCKET 97-01262	Not in TRA Docket 97-01262	Zone	BCS	USOC	RATES					OSS RATES					
							Nonrecurring		Nonrecurring Disconnect		Svc Order Submitted Elec per LSR	Svc Order Submitted Manually per LSR	Incremental Charge - Manual Svc Order vs. Electronic-1st	Incremental Charge - Manual Svc Order vs. Electronic-Add'l	Incremental Charge - Manual Svc Order vs. Electronic-Disc 1st	Incremental Charge - Manual Svc Order vs. Electronic-Disc Add'l
						Rec	First	Add'l	First	Add'l	SOMEC	SOMAN	SOMAN	SOMAN	SOMAN	SOMAN
Exchange Ports - DDITS Port - 4-Wire DS1 Port with DID capability	Exchange Ports - 4-Wire DID Port			UEPDD	UEPDD	$35.74	$75.93	$38.15	$8.77	$8.04			$20.35	$10.54	$13.32	$1.40
Subsequent Activity		*		UEPDD	USACP		$10.00	$10.00								
Exchange Ports - 2-Wire ISDN Port (See Notes below.)	Exchange Ports - 2-Wire ISDN Port			U1PMA	U1PMA	$16.26	$30.23	$29.49	$4.10	$4.10			$41.43	$42.17	$9.80	$9.80
Subsequent Activity		*		UEPDD	USASC		$10.00	$10.00								
All Available Vertical Features	[Exchange Ports includes all Applicable Features.]			UEPDD	UEPVF	$0.00	$0.00	$0.00								
NOTE: Transmission/usage charges associate with POTS circuit switched usage will also apply to circuit switched voice and/or circuit switched data transmission by B-Channels associated wi 2-wire ISDN ports.																
NOTE: Access to B Channel or D Channe Packet capabilities will be available only through BFR/New Business Request Process. Rates for the packet capabilities will be determined via the Bona Fide Request/New Business Request																
Exchange Ports - 2-Wire ISDN Port - Channel Profiles		*			U1UMA	$0.00	$0.00	$0.00								
Exchange Ports - 4-Wire ISDN DS1 Port	Exchange Ports - 4-Wire ISDN DS1 Port			UEPEX	UEPEX	$75.04	$148.66	$147.18	$38.46	$36.98			$40.69	$42.17	$9.07	$10.54
2-Wire VG Unbundled 2-Way PBX Trunk Res	Exchange Ports - 2-Wire Analog Line Port (PBX)			UEPSE	UEPRD	$1.79	$9.93	$9.19	$3.66	$2.92			$20.35	$10.54	$13.32	$1.40
2-Wire VG Line Side Unbundled 2-Way PBX Trunk - Bus	Exchange Ports - 2-Wire Analog Line Port (PBX)			UEPSP	UEPPC	$1.79	$9.93	$9.19	$3.66	$2.92			$20.35	$10.54	$13.32	$1.40
2-Wire VG Line Side Unbundled Outward PBX Trunk - Bus	Exchange Ports - 2-Wire Analog Line Port (PBX)			UEPSP	UEPPO	$1.79	$9.93	$9.19	$3.66	$2.92			$20.35	$10.54	$13.32	$1.40
2-Wire VG Line Side Unbundled Incomin PBX Trunk - Bus	Exchange Ports - 2-Wire Analog Line Port (PBX)			UEPSP	UEPP1	$1.79	$9.93	$9.19	$3.66	$2.92			$20.35	$10.54	$13.32	$1.40
2-Wire Analog Long Distance Terminal PBX Trunk - Bus	Exchange Ports - 2-Wire Analog Line Port (PBX)			UEPSP	UEPLD	$1.79	$9.93	$9.19	$3.66	$2.92			$20.35	$10.54	$13.32	$1.40
2-Wire Analog TN 2-Way Calling Plan PBX Trunk - Bus	Exchange Ports - 2-Wire Analog Line Port (PBX)			UEPSP	UEPT2	$1.79	$9.93	$9.19	$3.66	$2.92			$20.35	$10.54	$13.32	$1.40
2-Wire TN Outward Calling Plan PBX Trunk Bus	Exchange Ports - 2-Wire Analog Line Port (PBX)			UEPSP	UEPTO	$1.79	$9.93	$9.19	$3.66	$2.92			$20.35	$10.54	$13.32	$1.40
2-Wire Voice Unbundled PBX LD Termina Ports	Exchange Ports - 2-Wire Analog Line Port (PBX)			UEPSP	UEPLD	$1.79	$9.93	$9.19	$3.66	$2.92			$20.35	$10.54	$13.32	$1.40
2-Wire Voice Unbundled 2-Way PBX Tennessee Calling Port	Exchange Ports - 2-Wire Analog Line Port (PBX)			UEPSP	UEPT2	$1.79	$9.93	$9.19	$3.66	$2.92			$20.35	$10.54	$13.32	$1.40
2-Wire Voice Unbundled 1-Way Outgoin PBX Tennessee Calling Port	Exchange Ports - 2-Wire Analog Line Port (PBX)			UEPSP	UEPTO	$1.79	$9.93	$9.19	$3.66	$2.92			$20.35	$10.54	$13.32	$1.40
2-Wire Vice Unbundled 2-Way PBX Usage Port	Exchange Ports - 2-Wire Analog Line Port (PBX)			UEPSP	UEPXA	$1.79	$9.93	$9.19	$3.66	$2.92			$20.35	$10.54	$13.32	$1.40
2-Wire Voice Unbundled PBX Toll Termina Hotel Ports	Exchange Ports - 2-Wire Analog Line Port (PBX)			UEPSP	UEPXB	$1.79	$9.93	$9.19	$3.66	$2.92			$20.35	$10.54	$13.32	$1.40
2-Wire Voice Unbundled PBX LD DDD Terminals Port	Exchange Ports - 2-Wire Analog Line Port (PBX)			UEPSP	UEPXC	$1.79	$9.93	$9.19	$3.66	$2.92			$20.35	$10.54	$13.32	$1.40
2-Wire Voice Unbundled PBX LD Termina Switchboard Port	Exchange Ports - 2-Wire Analog Line Port (PBX)			UEPSP	UEPXD	$1.79	$9.93	$9.19	$3.66	$2.92			$20.35	$10.54	$13.32	$1.40
2-Wire Voice Unbundled PBX LD Termina Switchboard IDD Capable Port	Exchange Ports - 2-Wire Analog Line Port (PBX)			UEPSP	UEPXE	$1.79	$9.93	$9.19	$3.66	$2.92			$20.35	$10.54	$13.32	$1.40
2-Wire Voice Unbundled 2-Way PBX Hotel/Hospital Economy Administrative Calling Port	Exchange Ports - 2-Wire Analog Line Port (PBX)			UEPSP	UEPXL	$1.79	$9.93	$9.19	$3.66	$2.92			$20.35	$10.54	$13.32	$1.40
2-Wire Voice Unbundled 2-Way PBX Hotel/Hospital Economy Room Calling Port	Exchange Ports - 2-Wire Analog Line Port (PBX)			UEPSP	UEPXM	$1.79	$9.93	$9.19	$3.66	$2.92			$20.35	$10.54	$13.32	$1.40

UNBUNDLED NETWORK ELEMENT	UNBUNDLED NETEORK ELEMENT AS STATED IN DOCKET 97-01262	Not in TRA Docket 97-01262	Zone	BCS	USOC	RATES					OSS RATES					
							Nonrecurring		Nonrecurring		Svc Order Submitted Elec per LSR	Svc Order Submitted Manually per LSR	Incremental Charge - Manual Svc Order vs. Electronic-1st	Incremental Charge - Manual Svc Order vs. Electronic-Add'l	Incremental Charge - Manual Svc Order vs. Electronic-Disc 1st	Incremental Charge - Manual Svc Order vs. Electronic-Disc Add'l
									Disconnect							
						Rec	First	Add'l	First	Add'l	SOMEC	SOMAN	SOMAN	SOMAN	SOMAN	SOMAN
2-Wire Voice Unbundled 1-Way Outgoin PBX Hotel/Hospital Economy Admin Calling Port TN Calling Port	Exchange Ports - 2-Wire Analog Line Port (PBX)			UEPSP	UEPXN	$1.79	$9.93	$9.19	$3.66	$2.92			$20.35	$10.54	$13.32	$1.40
2-Wire Voice Unbundled 1-Way Outgoin PBX Hotel/Hospital Discount Room Calling Port	Exchange Ports - 2-Wire Analog Line Port (PBX)			UEPSP	UEPXO	$1.79	$9.93	$9.19	$3.66	$2.92			$20.35	$10.54	$13.32	$1.40
2-Wire Voice Unbundled 1-Way Outgoin PBX Measured Port	Exchange Ports - 2-Wire Analog Line Port (PBX)			UEPSP	UEPXS	$1.79	$9.93	$9.19	$3.66	$2.92			$20.35	$10.54	$13.32	$1.40
2-Wire Voice Unbundled PBX Collierville an Memphis Calling Port	Exchange Ports - 2-Wire Analog Line Port (PBX)			UEPSP	UEPXU	$1.79	$9.93	$9.19	$3.66	$2.92			$20.35	$10.54	$13.32	$1.40
2-Wire Voice Unbundled 2-Way PBX Tennessee RegionServ Calling Port	Exchange Ports - 2-Wire Analog Line Port (PBX)			UEPSP	UEPXV	$1.79	$9.93	$9.19	$3.66	$2.92			$20.35	$10.54	$13.32	$1.40
Subsequent Activity		*		UEPSP	USASC		$10.00	$10.00								
All Available Vertical Features	[Exchange Ports includes all Applicable Features.]			UEPSP	UEPVF	$0.00	$0.00	$0.00								
Exchange Ports - Coin Port	Exchange Ports - Coin Port					$2.11	$9.93	$9.19	$3.66	$2.92			$20.35	$10.54	$13.32	$1.40
UNBUNDLED LOCAL SWITCHING, PORT USAGE																
End Office Switching (Port Usage)																
End Office Switching Function, Per MOU	End Office Switching Function					$0.0008041										
End Office Trunk Port - Shared, Per MOU	End Office Interoffice Trunk Port Shared, per MOU															
Tandem Switching (Port Usage) (Local or Access Tandem)																
Tandem Switching Function Per MOU	Tandem Switching Function					$0.0009778										
Tandem Trunk Port - Shared, Per MOU	Tandem Interoffice Trunk Port Shared, per MOU															
UNBUNDLED TRANSPORT																
COMMON TRANSPORT (Shared)																
Common Transport - Per Mile, Per MOU	Common Transport - per mile, pe MOU					$0.0000064										
Common Transport - Facilities Terminatio Per MOU	Common Transport - Facilities Termination per MOU					$0.0003871										
INTEROFFICE CHANNEL - DEDICATED TRANSPORT - VOICE GRADE																
Interoffice Channel - Dedicated Transport - 2 Wire Voice Grade - Per Mile per month	Interoffice Transport - Dedicated - Voice Grade - per mile per MOU			U1TVX	1L5XX	$0.0174										
Interoffice Channel - Dedicated Transport- 2 Wire Voice Grade - Facility Termination per month	Interoffice Transport - Dedicated 2-Wire Voice Grade - Facility Termination			U1TVX	U1TV2	$18.58	$55.39	$17.37	$27.96	$3.51			$20.35	$21.09	$9.80	$10.54
Interoffice Channel - Dedicated Transport- Wire Voice Grade Rev Bat. - Per Mile per month	Interoffice Transport - Dedicated - Voice Grade - per mile per MOU			U1TVX	1L5XX	$0.0174										
Interoffice Channel-Dedicated Transport- Wire Voice Grade Rev Bat.-Facility Termination per month	Interoffice Transport - Dedicated 2-Wire Voice Grade - Facility Termination			U1TVX	U1TR2	$18.58	$55.39	$17.37	$27.96	$3.51			$20.35	$21.09	$9.80	$10.54
INTEROFFICE CHANNEL - DEDICATED TRANSPORT- 56/64 KBPS																
Interoffice Channel - Dedicated Transport 56 kbps - per mile per month	Interoffice Transport - Dedicated DSO - 56/64 kbps - per mile			U1TDX	1L5XX	$0.0174										
Interoffice Channel - Dedicated Transport - 56 kbps - Facility Termination per month	Interoffice Transport - Dedicated DSO - 56/64 kbps - Facility Termination			U1TDX	U1TD5	$17.98	$55.39	$17.37	$27.96	$3.51			$20.35	$21.09	$9.80	$10.54

UNBUNDLED NETWORK ELEMENT	UNBUNDLED NETEORK ELEMENT AS STATED IN DOCKET 97-01262	Not in TRA Docket 97-01262	Zone	BCS	USOC	RATES					OSS RATES					
							Nonrecurring		Nonrecurring Disconnect		Svc Order Submitted Elec per LSR	Svc Order Submitted Manually per LSR	Incremental Charge - Manual Svc Order vs. Electronic-1st	Incremental Charge - Manual Svc Order vs. Electronic-Add'l	Incremental Charge - Manual Svc Order vs. Electronic-Disc 1st	Incremental Charge - Manual Svc Order vs. Electronic-Disc Add'l
						Rec	First	Add'l	First	Add'l	SOMEC	SOMAN	SOMAN	SOMAN	SOMAN	SOMAN
Interoffice Channel - Dedicated Transport 64 kbps - per mile per month	Interoffice Transport - Dedicated DSO - 56/64 kbps - per mile			U1TDX	1L5XX	$0.0174										
Interoffice Channel - Dedicated Transport - 64 kbps - Facility Termination per month	Interoffice Transport - Dedicated DSO - 56/64 kbps - Facility Termination			U1TDX	U1TD6	$17.98	$55.39	$17.37	$27.96	$3.51			$20.35	$21.09	$9.80	$10.54
INTEROFFICE CHANNEL - DEDICATED TRANSPORT - DS1																
Interoffice Channel - Dedicated Channel DS1 - Per Mile per month	Interoffice Transport - Dedicated DS1 - per mile			U1TD1	1L5XX	$0.3562										
Interoffice Channel - Dedicated Tranport DS1 - Facility Termination per month	Interoffice Transport - Dedicated DS1 - Facility Termination			U1TD1	U1TF1	$77.86	$112.40	$76.27	$19.55	$14.99			$20.35	$21.09	$9.80	$10.54
LOCAL CHANNEL - DEDICATED TRANSPORT																
Local Channel - Dedicated - 2-Wire Voic Grade Per Mile per month		*		ULDVX	1L5NC	$0.00										
Local Channel - Dedicated - 2-Wire Voice Grade per month - Zone 1	Local Channel - Dedicated - 2 Wire Voice Grade [shown here deaveraged]		1	ULDVX	ULDV2	$17.18	$199.33	$24.16	$54.81	$4.80			$20.35	$10.54	$13.30	$0.00
Local Channel - Dedicated - 2-Wire Voice Grade per month - Zone 2	Local Channel - Dedicated - 2 Wire Voice Grade [shown here deaveraged]		2	ULDVX	ULDV2	$22.44	$199.33	$24.16	$54.81	$4.80			$20.35	$10.54	$13.30	$0.00
Local Channel - Dedicated - 2-Wire Voice Grade per month - Zone 3	Local Channel - Dedicated - 2 Wire Voice Grade [shown here deaveraged]		3	ULVDX	ULDV2	$29.34	$199.33	$24.16	$54.81	$4.80			$20.35	$10.54	$13.30	$0.00
Local Channel - Dedicated - 2-Wire Voic Grade Rev. Bat. Per Mile per month		*		ULDVX	1L5NC	$0.00										
Local Channel - Dedicated - 2-Wire Voice Grade Rev. Bat. Per month - Zone 1	Local Channel - Dedicated - 2 Wire Voice Grade [shown here deaveraged]		1	ULDVX	ULDR2	$17.18	$199.33	$24.16	$54.81	$4.80			$20.35	$10.54	$13.30	$0.00
Local Channel - Dedicated - 2-Wire Voice Grade Rev. Bat. Per Month - Zone 2	Local Channel - Dedicated - 2 Wire Voice Grade [shown here deaveraged]		2	ULDVX	ULDR2	$22.44	$199.33	$24.16	$54.81	$4.80			$20.35	$10.54	$13.30	$0.00
Local Channel - Dedicated - 2-Wire Voice Grade Rev. Bat. Per Month - Zone 3	Local Channel - Dedicated - 2 Wire Voice Grade [shown here deaveraged]		3	ULDVX	ULDR2	$29.34	$199.33	$24.16	$54.81	$4.80			$20.35	$10.54	$13.30	$0.00
Local Channel - Dedicated - 4-Wire Voic Grade Per Mile per month		*		ULDDX	1L5NC	$0.00										
Local Channel - Dedicated - 4-Wire Voice Grade per month - Zone 1	Local Channel - Dedicated - 4 Wire Voice Grade [shown here deaveraged]		1	ULDDX	ULDV4	$18.18	$201.53	$24.83	$55.52	$5.51			$20.35	$10.54	$13.30	$0.00
Local Channel - Dedicated - 4-Wire Voice Grade per month - Zone 2	Local Channel - Dedicated - 4 Wire Voice Grade [shown here deaveraged]		2	ULDDX	ULDV4	$23.74	$201.53	$24.83	$55.52	$5.51			$20.35	$10.54	$13.30	$0.00
Local Channel - Dedicated - 4-Wire Voice Grade per month - Zone 3	Local Channel - Dedicated - 4 Wire Voice Grade [shown here deaveraged]		3	ULDDX	ULDV4	$31.05	$201.53	$24.83	$55.52	$5.51			$20.35	$10.54	$13.30	$0.00
Local Channel - Dedicated - DS1 Per Mil per month		*		ULDD1	1L5NC	$0.00										
Local Channel - Dedicated - DS1 per month Zone 1	Local Channel - Dedicated DS1 [shown here deaveraged]		1	ULDD1	ULDF1	$36.24	$277.35	$233.26	$33.18	$22.30			$45.68	$1.76	$21.75	$1.76
Local Channel - Dedicated - DS1 per month Zone 2	Local Channel - Dedicated DS1 [shown here deaveraged]		2	ULDD1	ULDF1	$47.33	$277.35	$233.26	$33.18	$22.30			$45.68	$1.76	$21.75	$1.76
Local Channel - Dedicated - DS1 per month Zone 3	Local Channel - Dedicated DS1 [shown here deaveraged]		3	ULDD1	ULDF1	$61.89	$277.35	$233.26	$33.18	$22.30			$45.68	$1.76	$21.75	$1.76
MULTIPLEXERS																
Channelization - DS1 to DS0 Channe System	Channelization - Channel Systen DS1 to DSO			UXTD1	MQ1	$80.77	$141.87	$77.11	$14.51	$13.46			$20.35	$9.80	$11.49	$1.18

UNBUNDLED NETWORK ELEMENT	UNBUNDLED NETEORK ELEMENT AS STATED IN DOCKET 97-01262	Not in TRA Docket 97-01262	Zone	BCS	USOC	RATES					OSS RATES					
							Nonrecurring		Nonrecurring Disconnect		Svc Order Submitted Elec per LSR	Svc Order Submitted Manually per LSR	Incremental Charge - Manual Svc Order vs. Electronic-1st	Incremental Charge - Manual Svc Order vs. Electronic-Add'l	Incremental Charge - Manual Svc Order vs. Electronic-Disc 1st	Incremental Charge - Manual Svc Order vs. Electronic-Disc Add'l
						Rec	First	Add'l	First	Add'l	SOMEC	SOMAN	SOMAN	SOMAN	SOMAN	SOMAN
OCU-DP COCI (data) - DS1 to DS0 Channe	Interface Unit - Interface DS1 tc			UDL	1D1DD	$1.82	$6.07	$4.66					$20.35	$9.80	$11.49	$1.18
System - per month (2.4-64kbs)	DSO - OCU - DP Card															
2-wire ISDN COCI (BRITE) - DS1 to DS0	Interface Unit - Interface DS1 tc			UDN	UC1CA	$3.10	$6.07	$4.66					$20.35	$9.80	$11.49	$1.18
Channel Systsem - per month	DSO - Brite Card															
Voice Grade COCI - DS1 to DS0 Channe	Interface Unit - Interface DS1 tc			UEA	1D1VG	$.91	$6.07	$4.66					$20.35	$9.80	$11.49	$1.18
System - per month	DSO - Voice Grade Card															
	Channelization - Channel Systen															
DS3 to DS1 Channel System per month	DS3 to DS1			UXTD3	MQ3	$222.98	$308.03	$108.47	$44.47	$42.62			$20.35	$9.80	$11.49	$1.18
	Channelization - Channel Systen															
STS1 to DS1 Channel System per month	DS3 to DS1			UXTS1	MQ3	$222.98	$308.03	$108.47	$44.47	$42.62			$20.35	$9.80	$11.49	$1.18
DS3 Interface Unit (DS1 COCI) used with	Interface Unit - Interface DS3 tc			USL	UC1D1	$17.58	$6.07	$4.66					$20.35	$9.80	$11.49	$1.18
Loop per month	DS1															
DS3 Interface Unit (DS1 COCI) used with	Interface Unit - Interface DS3 tc			ULDD1	UC1D1	$17.58	$6.07	$4.66					$20.35	$9.80	$11.49	$1.18
Local Channel per month	DS1															
DS3 Interface Unit (DS1 COCI) used with	Interface Unit - Interface DS3 tc			U1TD1	UC1D1	$17.58	$6.07	$4.66					$20.35	$9.80	$11.49	$1.18
Interoffice Channel per month	DS1															
DARK FIBER																
Dark Fiber, Four Fiber Strands, Per Route																
Mile or Fraction Thereof per month - Local	Dark Fiber, per 4 fiber strands, per			UDF	1L5DC	$53.23										
Channel	route mile or fraction thereof															
	Dark Fiber, per 4 fiber strands, pe			UDF	UDFC4		$1,219.22	$169.75	$453.22	$339.34						
NRC Dark Fiber - Local Channel	route mile or fraction thereof															
Dark Fiber, Four Fiber Strands, Per Route																
Mile or Fraction Thereof per month -	Dark Fiber, per 4 fiber strands, per			UDF	1L5DF	$53.23										
Interoffice Channel	route mile or fraction thereof															
	Dark Fiber, per 4 fiber strands, pe			UDF	UDF14		$1,219.22	$169.75	$453.22	$339.34						
NRC Dark Fiber - Interoffice Channel	route mile or fraction thereof															
Dark Fiber, Four Fiber Strands, Per Route																
Mile or Fraction Thereof per month - Local	Dark Fiber, per 4 fiber strands, per			UDF	1L5DL	$53.23										
Loop	route mile or fraction thereof															
	Dark Fiber, per 4 fiber strands, pe			UDF	UDFL4		$1,219.22	$169.75	$453.22	$339.34						
NRC Dark Fiber - Local Loop	route mile or fraction thereof															
8XX ACCESS TEN DIGIT SCREENING																
	800 Access Ten digit screening															
8XX Access Ten Digit Screening, Per Call	(800 ATDS) per call					$0.0005192										
8XX Access Ten Digit Screening	800 Access Ten digit screening															
Reservation Charge Per 8XX Number	Reservation Charge per 800				N8R1X		$5.21	$0.76					$20.35			
Reserved	Number Reserved															
	800 Access Ten digit screening pe															
8XX Access Ten Digit Screening, Per 8XX	800 # established w/o POTS						$11.47	$1.46	$7.34	$0.7602			$20.35		$13.28	
No. Established W/O POTS Translations	Translations															
	800 Access Ten digit screening pe															
8XX Access Ten Digit Screening, Per 8XX	800 # established with POTS				N8FTX		$11.47	$1.46	$7.34	$0.7602			$20.35		$13.28	
No. Established With POTS Translations	Translations															
8XX Access Ten Digit Screening	800 Access Ten digit screening															
Customized Area of Service Per 8XX	Customized Area of Service per				N8FCX		$4.47	$2.24								
Number	800 Number															
8XX Access Ten Digit Screening, Multipl	800 ATDS, Multiple InterLATA															
InterLATA CXR Routing Per CXR Requested	CXR Routing per CXR Requested				N8FMX		$5.23	$3.00								
Per 8XX No.	per 800 #															
8XX Access Ten Digit Screening, Change	800 Access Ten digit screening															
Charge Per Request	Change Charge per Request				N8FAX		$5.97	$0.76					$20.35			
	800 Access Ten digit screening															
8XX Access Ten Digit Screening, Call	Call Handling and Destination				N8FDX		$4.47									
Handling and Destination Features	Features															
LINE INFORMATION DATA BASE ACCESS (LIDB)																

		UNBUNDLED NETWORK ELEMENT	UNBUNDLED NETEORK ELEMENT AS STATED IN DOCKET 97-01262	Not in TRA Docket 97-01262	Zone	BCS	USOC	RATES					OSS RATES					
									Nonrecurring		Nonrecurring Disconnect		Svc Order Submitted Elec per LSR	Svc Order Submitted Manually per LSR	Incremental Charge - Manual Svc Order vs. Electronic-1st	Incremental Charge - Manual Svc Order vs. Electronic-Add'l	Incremental Charge - Manual Svc Order vs. Electronic-Disc 1st	Incremental Charge - Manual Svc Order vs. Electronic-Disc Add'l
								Rec	First	Add'l	First	Add'l	SOMEC	SOMAN	SOMAN	SOMAN	SOMAN	SOMAN
		LIDB Common Transport Per Query	LIDB Common Transport per Query				OQT	$0.0000354										
		LIDB Validation Per Query	LIDB Validation per Query				OQU	$0.0117403										
		LIDB Originating Point Code Establishmer or Change	LIDB Originating Point Code Establishment or Change						$49.03						$20.35			
SIGNALING (CCS7)																		
		CCS7 Signaling Termination, Per STP Port	CCS7 Signaling Termination per STP Port					$138.41										
		CCS7 Signaling Usage, Per TCAP Message	CCS7 Signaling Usage per TCAF Message					$0.0000916										
		CCS7 Signaling Connection, Per link (A link)	CCS7 Signaling Connection per 5(kbps facilliity					$17.84	$130.84						$20.35			
		CCS7 Signaling Connection, Per link (B link (also known as D link)	CCS7 Signaling Connection per 5(kbps facilliity					$17.84	$130.84						$20.35			
		CCS7 Signaling Usage, Per ISUP Message	CCS7 Signaling Usage, per cal setup message					$0.0000373										
		CCS7 Signaling Usage Surrogate, per link per LATA	CCS7 Signaling Usage Surrogate per 56 kbps facility per LATA per month					$352.30							$20.35			
SELECTIVE ROUTING																		
		Selective Routing Per Unique Line Class Code Per Request Per Switch	Selective Routing (Interim Solutio Line Class Codes) per Unique Lin Class Code per Request per Switch				USRCR		$179.60						$20.35			
AIN - BELLSOUTH AIN SMS ACCESS SERVICE																		
		AIN SMS Access Service - Service Establishment, Per State, Initial Setup	AIN SMS Access Service - Service Establishment, per State, Initial Setup				CAMSE		$135.56									
		AIN SMS Access Service - Port Connection - Dial/Shared Access	AIN SMS Access Service - Port Connection - Dial/Shared Access				CAMDP		$41.75									
		AIN SMS Access Service - Port Connection ISDN Access	AIN SMS Access Service - Port Connection - ISDN Access				CAM1P		$41.75									
		AIN SMS Access Service - User Identificatio Codes - Per User ID Code	AIN SMS Access Service - User Identification Codes - Per User ID Code				CAMAU		$96.63									
		AIN SMS Access Service - Security Card, Per User ID Code, Initial or Replacement	AIN SMS Access Service - Security Card, per User ID Code, Initial or Replacement				CAMRC		$113.67									
		AIN SMS Access Service - Storage, Per Uni (100 Kilobytes)	AIN SMS Access Service - Storage, per unit (100 kilobytes)					$0.0024										
		AIN SMS Access Service - Session, Pe Minute	AIN SMS Access Service - Session, per minute					$0.0820123										
		AIN SMS Access Service - Company Performed Session, Per Minute	AIN SMS Access Service - company performed session, per minute					$2.27										
AIN - BELLSOUTH AIN TOOLKIT SERVICE																		
		AIN Toolkit Service - Service Establishmer Charge, Per State, Initial Setup	AIN TS - Service Establishmen Charge per State, Initial Setup				BAPSC		$132.04									
		AIN Toolkit Service - Training Session, Pe Customer	AIN TS - Training Session, pe Customer				BAPVX		$7,915									
		AIN Toolkit Service - Trigger Access Charge Per Trigger, Per DN, Term. Attempt	AIN TS - Trigger Access Charge, per Trigger per DN, Term Attempt				BAPTT		$31.21									

UNBUNDLED NETWORK ELEMENT	UNBUNDLED NETEORK ELEMENT AS STATED IN DOCKET 97-01262	Not in TRA Docket 97-01262	Zone	BCS	USOC	RATES					OSS RATES					
							Nonrecurring		Nonrecurring Disconnect		Svc Order Submitted Elec per LSR	Svc Order Submitted Manually per LSR	Incremental Charge - Manual Svc Order vs. Electronic-1st	Incremental Charge - Manual Svc Order vs. Electronic-Add'l	Incremental Charge - Manual Svc Order vs. Electronic-Disc 1st	Incremental Charge - Manual Svc Order vs. Electronic-Disc Add'l
						Rec	First	Add'l	First	Add'l	SOMEC	SOMAN	SOMAN	SOMAN	SOMAN	SOMAN
AIN Toolkit Service - Trigger Access Charge Per Trigger, Per DN, Off-Hook Delay	AIN TS - Trigger Access Charge per Trigger per DN, Off Hook Delay				BAPTD		$31.21									
AIN Toolkit Service - Trigger Access Charge Per Trigger, Per DN, Off-Hook Immediate	AIN TS - Trigger Access Charge per Trigger per DN, Off Hook Immediate				BAPTM		$31.21									
AIN Toolkit Service - Trigger Access Charge Per Trigger, Per DN, 10-Digit PODP	AIN TS - Trigger Access Charge, per Trigger per DN, 10-Digit PODP				BAPTO		$85.24									
AIN Toolkit Service - Trigger Access Charge Per Trigger, Per DN, CDP	AIN TS - Trigger Access Charge per Trigger per DN, CDP				BAPTC		$85.24									
AIN Toolkit Service - Trigger Access Charge Per Trigger, Per DN, Feature Code	AIN TS - Trigger Access Charge, per Trigger per DN, Feature Code				BAPTF		$85.24									
AIN Toolkit Service - Query Charge, Pe Query	AIN TS - Query Charge, Per Query					$.0211882										
AIN Toolkit Service - Type 1 Node Charge Per AIN Toolkit Subscription, Per Node, Per Query	AIN TS - Type 1 Node Charge, per AIN Toolkit subscription, per Node, per query					$.0054774										
AIN Toolkit Service - SCP Storage Charge, Per SMS Access Account, Per 100 Kilobytes	AIN TS - SCP Storage charge, per SMS access account, per 100 kilobytes					$1.50										
AIN Toolkit Service - Monthly report - Per AI Toolkit Service Subscription	AIN TS - Monthly Report - per AIN TS Subscription				BAPMS	$17.43	$33.52									
AIN Toolkit Service - Special Study - Per AI Toolkit Service Subscription	AIN TS - Special Study - per AIN TS Subscription				BAPLS	$0.1321116	$36.23									
AIN Toolkit Service - Call Event Report - Pe AIN Toolkit Service Subscription	AIN TS - Call Event Report - per AIN TS Subscription				BAPDS	$17.35	$33.52									
AIN Toolkit Service - Call Event Special Study - Per AIN Toolkit Service Subscription	AIN TS - Call Event Special Study per AIN TS Subscription				BAPES	$0.0511435	$36.23									
ODUF/EDOUF/ADUF/CMDS																
OPTIONAL DAILY USAGE FILE (ODUF)																
ODUF: Recording, per message	OSS OLEC Daily Usage File Recording per message					$0.0000044										
ODUF: Message Processing, per message	OSS OLEC Daily Usage File Message Distribution per message					$0.0027366										
ODUF: Message Processing, per Magnetic Tape provisioned	OSS OLEC Daily Usage File Message Distribution per magnetic tape provisioned					$52.75										
ODUF: Data Transmission (CONNECT:DIRECT), per message	OSS OLEC Daily Usage File Data Transmission (Connect: Direct), per message					$0.0000339										
UNBUNDLED PORT/LOOP COMBINATIONS - COST BASED RATES																
Cost Based Rates are applied where BellSouth required by FCC and/or State Commission rule t provide Unbundled Local Switching or Switch Ports. BellSouth is required to offer unbundled port/loop combinations that are Currently Combined in Tennessee unless the end user ha four or more DS0 equivalent lines and is in Zone 1 of one of the Top 8 MSAs in BellSouth's regio																

UNBUNDLED NETWORK ELEMENT	UNBUNDLED NETEORK ELEMENT AS STATED IN DOCKET 97-01262	Not in TRA Docket 97-01262	Zone	BCS	USOC	RATES					OSS RATES					
							Nonrecurring		Nonrecurring Disconnect		Svc Order Submitted Elec per LSR	Svc Order Submitted Manually per LSR	Incremental Charge - Manual Svc Order vs. Electronic-1st	Incremental Charge - Manual Svc Order vs. Electronic-Add'l	Incremental Charge - Manual Svc Order vs. Electronic-Disc 1st	Incremental Charge - Manual Svc Order vs. Electronic-Disc Add'l
						Rec	First	Add'l	First	Add'l	SOMEC	SOMAN	SOMAN	SOMAN	SOMAN	SOMAN
In the absence of ordered rates by a State Commission, the recurring rates for combination of port/loop network elements will the sum of the recurring rates for the UNEs which make up the combinations, and the nonrecurring rates shall b as set forth in this section.																
Vertical features shall apply to the Unbundled Port/Loop Combination - Cost Based Rate section in the same manner as they are applied to the Stand-Alone Unbundled Port section of th Rate Exhibit.																
End Office and Tandem Switching Usage an Common Transport Usage rates in the Port section of this rate exhibit shall apply to all combinations of loop/port network elements except for UNE Coin Port/Loop Combinations which have a flat rate usage charge (USOC: URECU).																
For Currently Combined Combos in TN, the nonrecurring charges shall be those identified in the Nonrecurring Charges - Currently Combined sections.																
2-WIRE VOICE GRADE LOOP WITH 2-WIRE LINE PORT (RES																
UNE Port/Loop Combination Rates																
2-Wire VG Loop/Port Combo - Zone 1	2-Wire Voice Grade Loop with 2 Wire Line Port - Zone 1		1			$14.18										
2-Wire VG Loop/Port Combo - Zone 2	2-Wire Voice Grade Loop with 2-Wire Line Port - Zone 2		2			$18.01										
2-Wire VG Loop/Port Combo - Zone 3	2-Wire Voice Grade Loop with 2 Wire Line Port - Zone 3		3			$23.02										
UNE Loop Rates																
2-Wire Voice Grade Loop (SL1) - Zone		**	1	UEPRX	UEPLX	$12.29										
2-Wire Voice Grade Loop (SL1) - Zone		**	2	UEPRX	UEPLX	$16.12										
2-Wire Voice Grade Loop (SL1) - Zone		**	3	UEPRX	UEPLX	$21.13										
2-Wire Voice Grade Line Port Rates (Res)																
2-Wire voice unbundled port - residence		**		UEPRX	UEPRL	$1.89										
2-Wire voice unbundled port with Caller ID res		**		UEPRX	UEPRC	$1.89										
2-Wire voice unbundled port outgoing only res		**		UEPRX	UEPRO	$1.89										
2-Wire voice Grade unbundled Tennesse extended local dialing parity port with Caller ID - res		**		UEPRX	UEPAQ	$1.89										
2-Wire voice unbundled Tennessee Are Calling port with Caller ID - res (F2R)		**		UEPRX	UEPAK	$1.89										
2-Wire voice unbundled Tennessee Are Calling port with Caller ID - res (TACER)		**		UEPRX	UEPAL	$1.89										
2-Wire voice unbundled Tennessee Are Calling port with Caller ID - res (TACSR)		**		UEPRX	UEPAM	$1.89										
2-Wire voice unbundled Tennessee Are Calling port with Caller ID - res (1MF2X)		**		UEPRX	UEPAN	$1.89										
2-Wire voice unbundled Tennessee Are Calling port with Caller ID - res (2MR)		**		UEPRX	UEPAO	$1.89										

UNBUNDLED NETWORK ELEMENT	UNBUNDLED NETEORK ELEMENT AS STATED IN DOCKET 97-01262	Not in TRA Docket 97-01262	Zone	BCS	USOC	RATES					OSS RATES					
							Nonrecurring		Nonrecurring Disconnect		Svc Order Submitted Elec per LSR	Svc Order Submitted Manually per LSR	Incremental Charge - Manual Svc Order vs. Electronic-1st	Incremental Charge - Manual Svc Order vs. Electronic-Add'l	Incremental Charge - Manual Svc Order vs. Electronic-Disc 1st	Incremental Charge - Manual Svc Order vs. Electronic-Disc Add'l
						Rec	First	Add'l	First	Add'l	SOMEC	SOMAN	SOMAN	SOMAN	SOMAN	SOMAN
2-Wire voice unbundles res, low usage lin port with Caller ID (LUM)		**		UEPRX	UEPAP	$1.89										
FEATURES																
All Available Vertical Features	[Exchange Ports includes al Applicable Features.]	**		UEPRX	UEPVF	$0.00	$0.00	$0.00								
LOCAL NUMBER PORTABILITY																
Local Number Portability (1 per port)		**		UEPRX	LNPCX	$0.35										
NONRECURRING CHARGES (NRCs) - CURRENTLY COMBINED																
2-Wire Voice Grade Loop / Line Por Combination - Conversion - Switch-as-is	2-Wire Voice Grade Loop/Line Port Combo - Switch-as-is			UEPRX	USAC2		$1.03	$0.29					$30.89	$7.03		
2-Wire Voice Grade Loop / Line Por Combination - Conversion - Switch with change		*		UEPRX	USACC		$1.03	$0.29					$30.89	$7.03		
2-Wire Voice Grade Loop / Line Por Combination - Conversion - Subsequent Database Update	2-Wire Voice Grade Loop/Line Port Combo - Subsequent Database Update						$0.76						$7.97			
ADDITIONAL NRCs																
2-Wire Voice Grade Loop/Line Por Combination - Subsequent Activity		**		UEPRX	USAS2		$10.00	$10.00								
2-WIRE VOICE GRADE LOOP WITH 2-WIRE LINE PORT (BUS)																
UNE Port/Loop Combination Rates																
2-Wire VG Loop/Port Combo - Zone 1	2-Wire Voice Grade Loop with 2 Wire Line Port - Zone 1		1			$14.18										
2-Wire VG Loop/Port Combo - Zone 2	2-Wire Voice Grade Loop with 2 Wire Line Port - Zone 2		2			$18.01										
2-Wire VG Loop/Port Combo - Zone 3	2-Wire Voice Grade Loop with 2 Wire Line Port - Zone 3		3			$23.02										
UNE Loop Rates																
2-Wire Voice Grade Loop (SL1) - Zone 1		**	1	UEPBX	UEPLX	$12.29										
2-Wire Voice Grade Loop (SL1) - Zone 2		**	2	UEPBX	UEPLX	$16.12										
2-Wire Voice Grade Loop (SL1) - Zone 3		**	3	UEPBX	UEPLX	$21.13										
2-Wire Voice Grade Line Port (Bus)																
2-Wire voice unbundled port without Calle ID - bus		**		UEPBX	UEPBL	$1.89										
2-Wire voice unbundled port with Caller E484 ID - bus		**		UEPBX	UEPBC	$1.89										
2-Wire voice unbundled port outgoing only bus		**		UEPBX	UEPBO	$1.89										
2-Wire voice Grade unbundled Tennesse extended local dialing parity port with Caller ID - bus		**		UEPBX	UEPAV	$1.89										
2-Wire voice unbundled incoming only po with Caller ID - Bus		**		UEPBX	UPEB1	$1.89										
2-Wire voice unbundled Tennessee Bus Way Area Calling Port Economy Option (TACC1)		**		UEPBX	UEPAC	$1.89										
2-Wire voice unbundled Tennessee Bus Way Area Calling Port Standard Option (TACC2)		**		UEPBX	UEPAD	$1.89										

UNBUNDLED NETWORK ELEMENT	UNBUNDLED NETEORK ELEMENT AS STATED IN DOCKET 97-01262	Not in TRA Docket 97-01262	Zone	BCS	USOC	RATES					OSS RATES					
							Nonrecurring		Nonrecurring Disconnect		Svc Order Submitted Elec per LSR	Svc Order Submitted Manually per LSR	Incremental Charge - Manual Svc Order vs. Electronic-1st	Incremental Charge - Manual Svc Order vs. Electronic-Add'l	Incremental Charge - Manual Svc Order vs. Electronic-Disc 1st	Incremental Charge - Manual Svc Order vs. Electronic-Disc Add'l
						Rec	First	Add'l	First	Add'l	SOMEC	SOMAN	SOMAN	SOMAN	SOMAN	SOMAN
2-Wire voice unbundled Tennessee Bus Way Collierville and Memphis Local Calling Port (B2F)		**		UEPBX	UEPAE	$1.89										
LOCAL NUMBER PORTABILITY																
Local Number Portability (1 per port)		**		UEPBX	LNPCX	$0.35										
FEATURES																
All Available Vertical Features	[Exchange Ports includes al Applicable Features.]	**		UEPBX	UEPVF	$0.00	$0.00	$0.00								
NONRECURRING CHARGES (NRCs) - CURRENTLY COMBINED																
2-Wire Voice Grade Loop / Line Por Combination - Conversion - Switch-as-is	2-Wire Voice Grade Loop/Line Port Combo - Switch-as-is			UEPBX	USAC2		$1.03	$0.29					$30.89	$7.03		
2-Wire Voice Grade Loop / Line Por Combination - Conversion - Switch with change		*		UEPBX	USACC		$1.03	$0.29					$30.89	$7.03		
2-Wire Voice Grade Loop / Line Por Combination - Conversion - Subsequent Database Update	2-Wire Voice Grade Loop/Line Port Combo - Subsequent Database Update						$0.76						$7.97			
ADDITIONAL NRCs																
2-Wire Voice Grade Loop/Line Por Combination - Subsequent Activity		**		UEPBX	USAS2		$10.00	$10.00								
2-WIRE VOICE GRADE LOOP WITH 2-WIRE LINE PORT (RES - PBX)																
UNE Port/Loop Combination Rates																
2-Wire VG Loop/Port Combo - Zone 1	2-Wire Voice Grade Loop with 2 Wire Line Port - Zone 1		1			$14.18										
2-Wire VG Loop/Port Combo - Zone 2	2-Wire Voice Grade Loop with 2 Wire Line Port - Zone 2		2			$18.01										
2-Wire VG Loop/Port Combo - Zone 3	2-Wire Voice Grade Loop with 2 Wire Line Port - Zone 3		3			$23.02										
UNE Loop Rates																
2-Wire Voice Grade Loop (SL 1) - Zone 1		**	1	UEPRG	UEPLX	$12.39										
2-Wire Voice Grade Loop (SL 1) - Zone 2		**	2	UEPRG	UEPLX	$16.22										
2-Wire Voice Grade Loop (SL 1) - Zone 3		**	3	UEPRG	UEPLX	$21.23										
2-Wire Voice Grade Line Port Rates (RES - PBX)																
2-Wire VG Unbundled Combination 2-Wa PBX Trunk Port - Res		**		UEPRG	UEPRD	$1.79										
LOCAL NUMBER PORTABILITY																
Local Number Portability (1 per port)		**		UEPRG	LNPCP	$3.15										
FEATURES																
All Available Vertical Features	[Exchange Ports includes al Applicable Features.]	**		UEPRG	UEPVF	$0.00	$0.00	$0.00								
NONRECURRING CHARGES (NRCs) - CURRENTLY COMBINED																
2-Wire Voice Grade Loop/ Line Por Combination (PBX) - Conversion - Switch-As Is	2-Wire Voice Grade Loop/Line Port Combo - Switch-as-is			UEPRG	USAC2		$1.03	$0.29					$30.89	$7.03		

UNBUNDLED NETWORK ELEMENT	UNBUNDLED NETEORK ELEMENT AS STATED IN DOCKET 97-01262	Not in TRA Docket 97-01262	Zone	BCS	USOC	RATES					OSS RATES					
							Nonrecurring		Nonrecurring Disconnect		Svc Order Submitted Elec per LSR	Svc Order Submitted Manually per LSR	Incremental Charge - Manual Svc Order vs. Electronic-1st	Incremental Charge - Manual Svc Order vs. Electronic-Add'l	Incremental Charge - Manual Svc Order vs. Electronic-Disc 1st	Incremental Charge - Manual Svc Order vs. Electronic-Disc Add'l
						Rec	First	Add'l	First	Add'l	SOMEC	SOMAN	SOMAN	SOMAN	SOMAN	SOMAN
2-Wire Voice Grade Loop/ Line Por Combination (PBX) - Conversion - Switch with Change		*		UEPRG	USACC		$1.03	$0.29					$30.89	$7.03		
2-Wire Voice Grade Loop / Line Por Combination - Conversion - Subsequent Database Update	2-Wire Voice Grade Loop/Line Port Combo - Subsequent Database Update						$0.76						$7.97			
ADDITIONAL NRCs																
2-Wire Voice Grade Loop/ Line Por Combination (PBX) - Subsequent Activity		**		UEPRG	USAS2		$10.00	$10.00					$30.89	$7.03		
2-WIRE VOICE GRADE LOOP WITH 2-WIRE LINE PORT (BUS - PBX)																
UNE Port/Loop Combination Rates																
2-Wire VG Loop/Port Combo - Zone 1	2-Wire Voice Grade Loop with 2 Wire Line Port - Zone 1		1			$14.18										
2-Wire VG Loop/Port Combo - Zone 2	2-Wire Voice Grade Loop with 2 Wire Line Port - Zone 2		2			$18.01										
2-Wire VG Loop/Port Combo - Zone 3	2-Wire Voice Grade Loop with 2 Wire Line Port - Zone 3		3			$23.02										
UNE Loop Rates																
2-Wire Voice Grade Loop (SL 1) - Zone		**	1	UEPPX	UEPLX	$12.39										
2-Wire Voice Grade Loop (SL 1) - Zone 2		**	2	UEPPX	UEPLX	$16.22										
2-Wire Voice Grade Loop (SL 1) - Zone 3		**	3	UEPPX	UEPLX	$21.23										
2-Wire Voice Grade Line Port Rates (BUS - PBX)																
Line Side Unbundled Combination 2-Wa PBX Trunk Port - Bus		**		UEPPX	UEPPC	$1.79										
Line Side Unbundled Outward PBX Trunl Port - Bus		**		UEPPX	UEPPO	$1.79										
Line Side Unbundled Incoming PBX Trun Port - Bus		**		UEPPX	UEPP1	$1.79										
2-Wire Voice Unbundled PBX LD Termina Ports		**		UEPPX	UEPLD	$1.79										
2-Wire Voice Unbundled 2-Way Combinatio PBX Tennessee Calling Port		**		UEPPX	UEPT2	$1.79										
2-Wire Voice Unbundled 1-Way Outgoin PBX Tennessee Calling Port		**		UEPPX	UEPTO	$1.79										
2-Wire Voice Unbundled 2-Way Combinatio PBX Usage Port		**		UEPPX	UEPXA	$1.79										
2-Wire Voice Unbundled PBX Toll Termina Hotel Ports		**		UEPPX	UEPXB	$1.79										
2-Wire Voice Unbundled PBX LD DDC Terminals Port		**		UEPPX	UEPXC	$1.79										
2-Wire Voice Unbundled PBX LD Termina Switchboard Port		**		UEPPX	UEPXD	$1.79										
2-Wire Voice Unbundled PBX LD Termina Switchboard IDD Capable Port		**		UEPPX	UEPXE	$1.79										
2-Wire Voice Unbundled 2-Way PBX Hotel/Hospital Economy Administrative Calling Port		**		UEPPX	UEPXL	$1.79										
2-Wire Voice Unbundled 2-Way PBX Hotel/Hospital Economy Room Calling Port		**		UEPPX	UEPXM	$1.79										
2-Wire Voice Unbundled 1-Way Outgoin PBX Hotel/Hospital Economy Admin Calling Port TN Calling Port		**		UEPPX	UEPXN	$1.79										

UNBUNDLED NETWORK ELEMENT	UNBUNDLED NETEORK ELEMENT AS STATED IN DOCKET 97-01262	Not in TRA Docket 97-01262	Zone	BCS	USOC	RATES					OSS RATES					
							Nonrecurring		Nonrecurring Disconnect		Svc Order Submitted Elec per LSR	Svc Order Submitted Manually per LSR	Incremental Charge - Manual Svc Order vs. Electronic-1st	Incremental Charge - Manual Svc Order vs. Electronic-Add'l	Incremental Charge - Manual Svc Order vs. Electronic-Disc 1st	Incremental Charge - Manual Svc Order vs. Electronic-Disc Add'l
						Rec	First	Add'l	First	Add'l	SOMEC	SOMAN	SOMAN	SOMAN	SOMAN	SOMAN
2-Wire Voice Unbundled 1-Way Outgoin PBX Hotel/Hospital Discount Room Calling Port		**		UEPPX	UEPXO	$1.79										
2-Wire Voice Unbundled 1-Way Outgoin PBX Measured Port		**		UEPPX	UEPXS	$1.79										
2-Wire Voice Unbundled PBX Collierville an Memphis Calling Port		**		UEPPX	UEPXU	$1.79										
2-Wire Voice Unbundled 2-Way PBX Tennessee RegionServ Callling Port		**		UEPPX	UEPXV	$1.79										
LOCAL NUMBER PORTABILITY																
Local Number Portability (1 per port)		**		UEPPX	LNPCP	$3.15										
FEATURES																
All Available Vertical Features	[Exchange Ports includes al Applicable Features.]	**		UEPPX	UEPVF	$0.00	$0.00	$0.00								
NONRECURRING CHARGES (NRCs) - CURRENTLY COMBINED																
2-Wire Voice Grade Loop/ Line Por Combination (PBX) - Conversion - Switch-As-Is	2-Wire Voice Grade Loop/Line Port Combo - Switch-as-is			UEPPX	USAC2		$1.03	$0.29					$30.89	$7.03		
2-Wire Voice Grade Loop/ Line Por Combination (PBX) - Conversion - Switch with Change		*		UEPPX	USACC		$1.03	$0.29					$30.89	$7.03		
2-Wire Voice Grade Loop / Line Por Combination - Conversion - Subsequent Database Update	2-Wire Voice Grade Loop/Line Port Combo - Subsequent Database Update						$0.76						$7.97			
ADDITIONAL NRCs																
2-Wire Voice Grade Loop/ Line Por Combination (PBX) - Subsequent Activity		**		UEPPX	USAS2		$10.00	$10.00					$30.89	$7.03		
2-WIRE VOICE GRADE LOOP- BUS ONLY - WITH 2-WIRE DID TRUNK PORT																
UNE Port/Loop Combination Rates																
2-Wire VG Loop/2-Wire DID Trunk Por Combo - Zone 1	2-Wire Voice Grade Loop with 2 Wire DID Trunk Port - Zone 1		1			$18.38										
2-Wire VG Loop/2-Wire DID Trunk Por Combo - Zone 2	2-Wire Voice Grade Loop with 2 Wire DID Trunk Port - Zone 2		2			$19.87										
2-Wire VG Loop/2-Wire DID Trunk Por Combo - Zone 3	2-Wire Voice Grade Loop with 2 Wire DID Trunk Port - Zone 3		3			$25.52										
NONRECURRING CHARGES - CURRENTLY COMBINED																
2-Wire Voice Grade Loop / 2-Wire DID Trunk Port Combination - Switch-as-is	2-Wire Voice Grade Loop with 2 Wire DID Trunk Port Combo - Switch-as-is			UEPPX	USAC1		$8.76	$5.75					$41.43	$9.80		
2-Wire Voice Grade Loop / 2-Wire DID Trunk Port Combination Conversion with Changes		*		UEPPX	USA1C		$8.76	$5.75			$3.50		$41.43	$9.80	$20.00	$20.00
Telephone Number/Trunk Group Establisment Charges																
DID Trunk Termination (One Per Port)		**		UEPPX	NDT	$0.00	$0.00	$0.00			$3.50		$41.43	$9.80	$20.00	$20.00
DID Numbers, Establish Trunk Group an Provide First Group of 20 DID Numbers		**		UEPPX	NDZ	$0.00	$0.00	$0.00			$3.50		$41.43	$9.80	$20.00	$20.00
Additional DID Numbers for each Group o 20 DID Numbers		**		UEPPX	ND4	$0.00	$0.00	$0.00			$3.50		$41.43	$9.80	$20.00	$20.00

UNBUNDLED NETWORK ELEMENT	UNBUNDLED NETEORK ELEMENT AS STATED IN DOCKET 97-01262	Not in TRA Docket 97-01262	Zone	BCS	USOC	RATES					OSS RATES					
							Nonrecurring		Nonrecurring Disconnect		Svc Order Submitted Elec per LSR	Svc Order Submitted Manually per LSR	Incremental Charge - Manual Svc Order vs. Electronic-1st	Incremental Charge - Manual Svc Order vs. Electronic-Add'l	Incremental Charge - Manual Svc Order vs. Electronic-Disc 1st	Incremental Charge - Manual Svc Order vs. Electronic-Disc Add'l
						Rec	First	Add'l	First	Add'l	SOMEC	SOMAN	SOMAN	SOMAN	SOMAN	SOMAN
DID Numbers, Non- consecutive DID Numbers , Per Number		**		UEPPX	ND5	$0.00	$0.00	$0.00			$3.50		$41.43	$9.80	$20.00	$20.00
LOCAL NUMBER PORTABILITY																
Local Number Portability (1 per port)		**		UEPPX	LNPCP	$3.15	$0.00	$0.00								
2-WIRE ISDN DIGITAL GRADE LOOP WITH 2-WIRE ISDN DIGITAL LINE SIDE PORT																
UNE Port/Loop Combination Rates																
2W ISDN Digital Grade Loop/2W ISDN Digital Line Side Port - Zone 1	2-Wire ISDN Digital Grade Loop with 2-Wire ISDN Digital Line Side Port - Zone 1		1			$32.27							$19.99	$19.99	$20.00	$20.00
2W ISDN Digital Grade Loop/2W ISDN Digital Line Side Port - Zone 2	2-Wire ISDN Digital Grade Loop with 2-Wire ISDN Digital Line Side Port - Zone 2		2			$34.78							$19.99	$19.99	$20.00	$20.00
2W ISDN Digital Grade Loop/2W ISDN Digital Line Side Port - Zone 3	2-Wire ISDN Digital Grade Loop with 2-Wire ISDN Digital Line Side Port - Zone 3		3			$44.32							$19.99	$19.99	$20.00	$20.00
NONRECURRING CHARGES - CURRENTLY COMBINED																
2-Wire ISDN Digital Grade Loop / 2-Wire ISDN Line Side Port Combination - Conversion	2-Wire ISDN Digital Grade Loop 2-Wire ISDN Line Side Port Combo - Switch-as-is			UEPPB	USACB		$117.23	$117.23			$3.50		$19.99	$19.99	$20.00	$20.00
ADDITIONAL NRCs																
2-Wire ISDN Digital Grade Loop / 2-Wire ISDN Line Side Port Combination-Non Feature Subs Activity	2-Wire ISDN Digital Grade Loop 2-Wire ISDN Line Side Port Combo - Non Feature Subsequent Activity			UEPPB	USASB		$212.88				$3.50		$19.99	$19.99	$20.00	$20.00
LOCAL NUMBER PORTABILITY																
Local Number Portability (1 per port)		**		UEPPR	LNPCX	$0.35	$0.00	$0.00								
B-CHANNEL USER PROFILE ACCESS:																
CVS/CSD (DMS/5ESS)		**		UEPPB	U1UCA	$0.00	$0.00	$0.00								
CVS (EWSD)		**		UEPPB	U1UCB	$0.00	$0.00	$0.00								
CSD		**		UEPPB	U1UCC	$0.00	$0.00	$0.00								
B-CHANNEL AREA PLUS USER PROFILE ACCESS: (AL,KY,LA,MS SC,MS, & TN)																
CVS/CSD (DMS/5ESS)		**		UEPPB	U1UCD	$0.00	$0.00	$0.00								
CVS (EWSD)		**		UEPPB	U1UCE	$0.00	$0.00	$0.00								
CSD		**		UEPPB	U1UCF	$0.00	$0.00	$0.00								
USER TERMINAL SERVICE PROFILE(EWSD		**		UEPPB	U1UMA	$0.00	$0.00	$0.00								
VERTICAL FEATURES																
One per Channel B User Profile		**		UEPPB	UEPVF	$0.00	$0.00	$0.00								
4-WIRE DS1 DIGITAL LOOP WITH 4-WIRE ISDN DS1 DIGITAL TRUNK PORT																
UNE Port/Loop Combination Rates																
4W DS1 Digital Loop/4W ISDN DS1 Digital Trunk Port - Zone 1	4-Wire DS1 Digital Loop with 4 Wire ISDN DS1 Digital Trunk Port Zone 1		1			$132.58							$19.99	$19.99	$20.00	$20.00

UNBUNDLED NETWORK ELEMENT	UNBUNDLED NETEORK ELEMENT AS STATED IN DOCKET 97-01262	Not in TRA Docket 97-01262	Zone	BCS	USOC	RATES					OSS RATES					
							Nonrecurring		Nonrecurring Disconnect		Svc Order Submitted Elec per LSR	Svc Order Submitted Manually per LSR	Incremental Charge - Manual Svc Order vs. Electronic-1st	Incremental Charge - Manual Svc Order vs. Electronic-Add'l	Incremental Charge - Manual Svc Order vs. Electronic-Disc 1st	Incremental Charge - Manual Svc Order vs. Electronic-Disc Add'l
						Rec	First	Add'l	First	Add'l	SOMEC	SOMAN	SOMAN	SOMAN	SOMAN	SOMAN
4W DS1 Digital Loop/4W ISDN DS1 Digital Trunk Port - Zone 2	4-Wire DS1 Digital Loop with 4 Wire ISDN DS1 Digital Trunk Port Zone 2		2			$150.25							$19.99	$19.99	$20.00	$20.00
4W DS1 Digital Loop/4W ISDN DS1 Digital Trunk Port - Zone 3	4-Wire DS1 Digital Loop with 4 Wire ISDN DS1 Digital Trunk Port Zone 3		3			$173.44							$19.99	$19.99	$20.00	$20.00
NONRECURRING CHARGES - CURRENTLY COMBINED																
4-Wire DS1 Digital Loop / 4-Wire ISDN DS1 Digital Trunk Port Combination - Conversion Switch-as-is	4-Wire DS1 Digital Loop with 4 Wire ISDN DS1 Digital Trunk Port Combo - Switch-as-is			UEPPP	USACP		$328.53	$328.53					$19.99	$19.99	$20.00	$20.00
ADDITIONAL NRCs																
4-Wire DS1 Dig Loop / 4-Wire ISDN DS1 Dig Trunk Port Combination-Sub Channel Activation-Per Channel	4-Wire DS1 Digital Loop with 4-Wire ISDN DS1 Digital Trunk Port Combo - Subsequent Channel Activation - Per Channel			UEPPP	USASP		$28.39						$19.99	$19.99	$20.00	$20.00
4-Wire DS1 Dig Loop / 4-Wire ISDN DS1 Dig Trunk Port Combination-Sub Inward/2-Way Telephone Numbers	4-Wire DS1 Digital Loop with 4-Wire ISDN DS1 Digital Trunk Port Combo - Subsequent Inward/2-way Telephone Numbers			UEPPP	PR7TG		$0.94						$19.99	$19.99	$20.00	$20.00
4-Wire DS1 Dig Loop / 4-Wire ISDN DS1 Dig Trunk Port Combination-Sub Outward Telephone Numbers	4-Wire DS1 Digital Loop with 4 Wire ISDN DS1 Digital Trunk Port Combo - Subsequent Outward Telephone Numbers			UEPPP	PR7TP		$22.36						$19.99	$19.99	$20.00	$20.00
4-Wire DS1 Dig Loop / 4-Wire ISDN DS1 Dig Trunk Port Combination-Subsequent Inward Telephone Numbers	4-Wire DS1 Digital Loop with 4 Wire ISDN DS1 Digital Trunk Port Combo - Subsequent Inward Telephone Numbers			UEPPP	PR7ZT		$44.71						$19.99	$19.99	$20.00	$20.00
4-Wire DS1 Dig Loop / 4-Wire ISDN DS1 Dig Trunk Port Combination-Subsequent Service Order Per Order	4-Wire DS1 Digital Loop with 4 Wire ISDN DS1 Digital Trunk Port Combo - Subsequent Service Order Per Order			UEPPP	USASP		$189.76						$19.99	$19.99	$20.00	$20.00
LOCAL NUMBER PORTABILITY																
Local Number Portability (1 per port)		**		UEPPP	LNPCN	$1.75										
INTERFACE (Provsioning Only)																
Voice/Data		**		UEPPP	PR71V	$0.00										
Digital Data		**		UEPPP	PR71D	$0.00										
Inward Data		**		UEPPP	PR71E	$0.00										
CALL TYPES																
Inward		**		UEPPP	PR7C1	$0.00										
Outward		**		UEPPP	PR7C0	$0.00										
Two-way		**		UEPPP	PR7CC	$0.00										
4-WIRE DS1 DIGITAL LOOP WITH 4-WIRE DDITS TRUNK PORT																
UNE Port/Loop Combination Rates																
4W DS1 Digital Loop/4W DDITS Trunk Port Zone 1	4-Wire DS1 Digital Loop With 4 Wire DID Trunk Port - Zone 1		1			$93.28										
4W DS1 Digital Loop/4W DDITS Trunk Port Zone 2	4-Wire DS1 Digital Loop With 4 Wire DID Trunk Port - Zone 2		2			$110.95										

UNBUNDLED NETWORK ELEMENT	UNBUNDLED NETEORK ELEMENT AS STATED IN DOCKET 97-01262	Not in TRA Docket 97-01262	Zone	BCS	USOC	RATES					OSS RATES					
							Nonrecurring		Nonrecurring Disconnect		Svc Order Submitted Elec per LSR	Svc Order Submitted Manually per LSR	Incremental Charge - Manual Svc Order vs. Electronic-1st	Incremental Charge - Manual Svc Order vs. Electronic-Add'l	Incremental Charge - Manual Svc Order vs. Electronic-Disc 1st	Incremental Charge - Manual Svc Order vs. Electronic-Disc Add'l
						Rec	First	Add'l	First	Add'l	SOMEC	SOMAN	SOMAN	SOMAN	SOMAN	SOMAN
4W DS1 Digital Loop/4W DDITS Trunk Port Zone 3	4-Wire DS1 Digital Loop With 4 Wire DID Trunk Port - Zone 3		3			$134.14										
NONRECURRING CHARGES - CURRENTLY COMBINED																
4-Wire DS1 Digital Loop / 4-Wire DDITS Trunk Port Combination - Switch-as-is	4-Wire DS1 Digital Loop/4-Wire DID Trunk Port Combo - Switch-as-is			UEPDC	USAC4		$312.91	$312.91			$3.50		$19.99	$19.99	$20.00	$20.00
4-Wire DS1 Digital Loop / 4-Wire DDITS Trunk Port Combination - Conversion with DS1 Changes		*		UEPDC	USAWA		$312.91	$312.91			$3.50		$19.99	$19.99	$20.00	$20.00
4-Wire DS1 Digital Loop / 4-Wire DDITS Trunk Port Combination - Conversion with Change - Trunk	4-Wire DS1 Digital Loop/4-Wire DID Trunk Port Combo - Switch-as-is			UEPDC	USAWB		$312.91	$312.91			$3.50		$19.99	$19.99	$20.00	$20.00
ADDITIONAL NRCs																
4-Wire DS1 Dig Loop / 4-Wire DDITS Trunk Port Combination-Subsequent Service Activity Per Svc Order	4-Wire DS1 Digital Loop 4-Wire DID Trunk Port Combo - Subsequent Service Order Per Order			UEPDC	USAS4		$94.88	$94.88			$3.50		$19.99	$19.99	$20.00	$20.00
4-Wire DS1 Dig Loop/4-Wire DDITS Trk Port Combination-NRC-Sub Channel Activation-Per Chanl-2-Way Trk	4-Wire DS1 Digital Loop/4-Wire DID Trunk Port Combo - Subsequent Channel Activation Per Channel			UEPDC	UDTTA		$108.67				$3.50		$19.99	$19.99	$20.00	$20.00
4-Wire DS1 Dig Loop/4-Wire DDITS Trk Port Combo-Sub Channel Activation-Per Chanl-1-Way Outward Trk	4-Wire DS1 Digital Loop/4-Wire DID Trunk Port Combo - Subsequent Channel Activation Per Channel			UEPDC	UDTTB		$108.67				$3.50		$19.99	$19.99	$20.00	$20.00
4-Wire DS1 Dig Loop/4-Wire DDITS Trk Port Combo-Sub Chan Activation-Per Chan-1-Way Inwrd Trk w/o DID	4-Wire DS1 Digital Loop/4-Wire DID Trunk Port Combo - Subsequent Channel Activation Per Channel			UEPDC	UDTTC		$108.67				$3.50		$19.99	$19.99	$20.00	$20.00
4-Wire DS1 Dig Loop/4-Wire DDITS Trk Port Combo-Sub Chan Activation-Per Chan-1-Way Inwd Trk with DID	4-Wire DS1 Digital Loop/4-Wire DID Trunk Port Combo - Subsequent Channel Activation Per Channel			UEPDC	UDTTD		$108.67				$3.50		$19.99	$19.99	$20.00	$20.00
4-Wire DS1 Dig Loop/4-Wire DDITS Trk Port Combo-Sub Chan Activ'n-Per Chan-2-Way DID with User Trans	4-Wire DS1 Digital Loop/4-Wire DID Trunk Port Combo - Subsequent Channel Activation Per Channel			UEPDC	UDTTE		$108.67				$3.50		$19.99	$19.99	$20.00	$20.00
4-Wire DS1 Digital Loop / 4-Wire DDITS Trunk Port Combination - Subsequent Signaling Changes	4-Wire DS1 Digital Loop 4-Wire DID Trunk Port Combo - Subsequent Signaling Changes			UEPDC			$22.92				$3.50		$19.99	$19.99	$20.00	$20.00
4-Wire DS1 Digital Loop / 4-Wire DDITS Trunk Port Combination - Subsequent Service Order Per Order	4-Wire DS1 Digital Loop 4-Wire DID Trunk Port Combo - Subsequent Service Order Per Order			UEPDC	USAS4		$94.88	$94.88			$3.50		$19.99	$19.99	$20.00	$20.00
4-Wire DS1 Dig Loop/4-Wire ISDN DS1 Digital Trunk Port Combination - Subsequent Telephone Numbers	4-Wire DS1 Digital Loop 4-Wire DID Trunk Port Combo - Subsequent Telephone Numbers			UEPDC			$88.68				$3.50		$19.99	$19.99	$20.00	$20.00
BIPOLAR 8 ZERO SUBSTITUTION																
Superframe Format - Conversion or New Install		**		UEPDC	CC0SF	$0.00	$0.00	$0.00								
Extended Superframe Format - Conversion or New Install		**		UEPDC	CC0EF	$0.00	$0.00	$0.00								
Superframe Format - Subsequent Activity		**		UEPDC	CCOSF	$0.00	$590.00	$590.00			$3.50		$19.99	$19.99	$20.00	$20.00
Extended Superframe Format - Subsequen Activity		**		UEPDC	CCOEF	$0.00	$590.00	$590.00			$3.50		$19.99	$19.99	$20.00	$20.00

UNBUNDLED NETWORK ELEMENT	UNBUNDLED NETEORK ELEMENT AS STATED IN DOCKET 97-01262	Not in TRA Docket 97-01262	Zone	BCS	USOC	RATES					OSS RATES					
							Nonrecurring		Nonrecurring		Svc Order Submitted Elec per LSR	Svc Order Submitted Manually per LSR	Incremental Charge - Manual Svc Order vs. Electronic-1st	Incremental Charge - Manual Svc Order vs. Electronic-Add'l	Incremental Charge - Manual Svc Order vs. Electronic-Disc 1st	Incremental Charge - Manual Svc Order vs. Electronic-Disc Add'l
									Disconnect							
						Rec	First	Add'l	First	Add'l	SOMEC	SOMAN	SOMAN	SOMAN	SOMAN	SOMAN
Alternate Mark Inversion																
Superframe Format		**		UEPDC	MCOSF		$0.00	$0.00								
Extended SuperFrame Format		**		UEPDC	MCOPO		$0.00	$0.00								
Telephone Number/Trunk Group Establisment Charges																
Telephone Number for 2-Way Trunk Group		**		UEPDC	UDTGX	$0.00					$3.50		$19.99	$19.99	$20.00	$20.00
Telephone Number for 1-Way Outwarc Trunk Group		**		UEPDC	UDTGY	$0.00					$3.50		$19.99	$19.99	$20.00	$20.00
Telephone Number for 1-Way Inward Trun Group Without DID		**		UEPDC	UDTGZ	$0.00					$3.50		$19.99	$19.99	$20.00	$20.00
DID Numbers, Establish Trunk Group ani Provide First Group of 20 DID Numbers		**		UEPDC	NDZ	$0.00					$3.50		$19.99	$19.99	$20.00	$20.00
Additional DID Numbers for each Group o 20 DID Numbers		**		UEPDC	ND4	$0.00					$3.50		$19.99	$19.99	$20.00	$20.00
DID Numbers, Non- consecutive DIL Numbers , Per Number		**		UEPDC	ND5	$0.00					$3.50		$19.99	$19.99	$20.00	$20.00
Dedicated DS1 (Interoffice Channel Mileage) - FX/FCO for 4-Wire DS1 Digital Loop with 4-Wire DDITS Trunk Port																
Interoffice Channel Mileage - Fixed rate 0-miles (Facilities Termination)		**		UEPDC	1LNO1	$75.83					$3.50		$19.99	$19.99	$20.00	$20.00
Interoffice Channel Mileage - Additional rat per mile - 0-8 miles		**		UEPDC	1LNOA	$0.3525					$3.50		$19.99	$19.99	$20.00	$20.00
Interoffice Channel Mileage - Fixed rate 9-2 miles (Facilities Termination)		**		UEPDC	1LNO2	$0.0000										
Interoffice Channel Mileage - Additional rat per mile - 9-25 miles		**		UEPDC	1LNOB	$0.3525					$3.50		$19.99	$19.99	$20.00	$20.00
Interoffice Channel Mileage - Fixed rate 25 miles (Facilities Termination)		**		UEPDC	1LNO3	$0.0000										
Interoffice Channel Mileage - Additional rat per mile - 25+ miles		**		UEPDC	1LNOC	$0.3525					$3.50		$19.99	$19.99	$20.00	$20.00
Local Number Portability, per DS0 Activated		**		UEPDC	LNPCP	$3.15										
Central Office Termininating Point		**		UEPDC	CTG	$0.00										
ENHANCED EXTENDED LINK (EELs)																
NOTE: New (not currently combined) loop/transport (EEL) combinations are only available in density Zone 1 of the Nashville MSA in TN for customers w/ 4 or more lines.																
For Currently Combined EELs, network element recurring and Switch As Is Charges apply. For new EELs, network element recurring and nonrecurring apply (no Switch As Is Charge).																
2-WIRE VOICE GRADE EXTENDED LOOP WITH DEDICATED DS1 INTEROFFICE TRANSPORT (EEI																
First 2-Wire Analog Voice Grade Loop - SL2/DS1 Interofficed Transport Combination Zone 1	2-Wire Voice Grade Extended Loop With DS1 Dedicated Interoffice Transport (First 2-Wire Voice Grade with DS1 excluding mileage) - Zone 1		1	UNCVX	UEAL2	$176.10										

		UNBUNDLED NETWORK ELEMENT	UNBUNDLED NETEORK ELEMENT AS STATED IN DOCKET 97-01262	Not in TRA Docket 97-01262	Zone	BCS	USOC	RATES					OSS RATES					
									Nonrecurring		Nonrecurring Disconnect		Svc Order Submitted Elec per LSR	Svc Order Submitted Manually per LSR	Incremental Charge - Manual Svc Order vs. Electronic-1st	Incremental Charge - Manual Svc Order vs. Electronic-Add'l	Incremental Charge - Manual Svc Order vs. Electronic-Disc 1st	Incremental Charge - Manual Svc Order vs. Electronic-Disc Add'l
								Rec	First	Add'l	First	Add'l	SOMEC	SOMAN	SOMAN	SOMAN	SOMAN	SOMAN
		First 2-Wire Analog Voice Grade Loop - SL2/DS1 Interofficed Transport Combination Zone 2	2-Wire Voice Grade Extended Loop With DS1 Dedicated Interoffice Transport (First 2-Wire Voice Grade with DS1 excluding mileage) - Zone 2		2	UNCVX	UEAL2	$181.17										
		First 2-Wire Analog Voice Grade Loop - SL2/DS1 Interofficed Transport Combination Zone 3	2-Wire Voice Grade Extended Loop With DS1 Dedicated Interoffice Transport (First 2-Wire Voice Grade with DS1 excluding mileage) - Zone 3		3	UNCVX	UEAL2	$187.82										
		Interoffice Transport - Dedicated - DS1 combination - Per Mile per month	Interoffice Transport Dedicated DS1 - Per Mile			UNC1X	1L5XX	$0.3562										
		Each Additional 2-Wire Analog VG Loop-SL2 in the same DS1 Interoffice Transport Combination-Zone 1	2-Wire Voice Grade Extended Loop With DS1 Dedicated Interoffice Transport (Additional 2-Wire Voice Grade Loop in same DS1 excluding mileage) - Zone 1		1	UNCVX	UEAL2	$17.47										
		Each Additional 2-Wire Analog VG Loop-SL2 in the same DS1 Interoffice Transport Combination-Zone 2	2-Wire Voice Grade Extended Loop With DS1 Dedicated Interoffice Transport (Additional 2-Wire Voice Grade Loop in same DS1 excluding mileage) - Zone 2		2	UNCVX	UEAL2	$22.54										
		Each Additional 2-Wire Analog VG Loop-SL2 in the same DS1 Interoffice Transport Combination-Zone 3	2-Wire Voice Grade Extended Loop With DS1 Dedicated Interoffice Transport (Additional 2-Wire Voice Grade Loop in same DS1 excluding mileage) - Zone 3		3	UNCVX	UEAL2	$29.19										
		Nonrecurring Currently Combined Network Elements Switch -As-Is Charge	Non-Recurring Cost for Extended Loop or Local Channel and Interoffice Combination - Switch-as-is			UNC1X	UNCCC		$52.73	$24.62	$9.12	$9.12						
	4-WIRE VOICE GRADE EXTENDED LOOP WITH DEDICATED DS1 INTEROFFICE TRANSPORT (EEL)																	
		First 4-Wire Analog Voice Grade Loop/DS1 Interoffice Transport Combination - Zone 1	4-Wire Voice Grade Extended Loop With DS1 Dedicated Interoffice Transport (First 4-Wire 56 or 64 kbps Digital Grade Loop with DS1 excluding mileage) - Zone 1		1	UNCVX	UEAL4	$184.24										
		First 4-Wire Analog Voice Grade Loop/DS1 Interoffice Transport Combination - Zone 2	4-Wire Voice Grade Extended Loop With DS1 Dedicated Interoffice Transport (First 4-Wire 56 or 64 kbps Digital Grade Loop with DS1 excluding mileage) - Zone 2		2	UNCVX	UEAL4	$191.80										
		First 4-Wire Analog Voice Grade Loop/DS1 Interoffice Transport Combination - Zone 3	4-Wire Voice Grade Extended Loop With DS1 Dedicated Interoffice Transport (First 4-Wire 56 or 64 kbps Digital Grade Loop with DS1 excluding mileage) - Zone 3		3	UNCVX	UEAL4	$201.72										
		Interoffice Transport - Dedicated - DS1 combination - Per Mile Per Month	Interoffice Transport - Dedicated DS1 - Per Mile			UNC1X	1L5XX	$0.3562										

		UNBUNDLED NETWORK ELEMENT	UNBUNDLED NETEORK ELEMENT AS STATED IN DOCKET 97-01262	Not in TRA Docket 97-01262	Zone	BCS	USOC	RATES					OSS RATES					
									Nonrecurring		Nonrecurring Disconnect		Svc Order Submitted Elec per LSR	Svc Order Submitted Manually per LSR	Incremental Charge - Manual Svc Order vs. Electronic-1st	Incremental Charge - Manual Svc Order vs. Electronic-Add'l	Incremental Charge - Manual Svc Order vs. Electronic-Disc 1st	Incremental Charge - Manual Svc Order vs. Electronic-Disc Add'l
								Rec	First	Add'l	First	Add'l	SOMEC	SOMAN	SOMAN	SOMAN	SOMAN	SOMAN
		Additional 4-Wire Analog Voice Grade Loop in same DS1 Interoffice Transport Combination - Zone 1	4-Wire Voice Grade Extended Loop With DS1 Dedicated Interoffice Transport (Additional 4-Wire 56 or 64 kbps in same DS1 excluding mileage) -Zone 1		1	UNCVX	UEAL4	$25.61										
		Additional 4-Wire Analog Voice Grade Loop in same DS1 Interoffice Transport Combination - Zone 2	4-Wire Voice Grade Extended Loop With DS1 Dedicated Interoffice Transport (Additional 4-Wire 56 or 64 kbps in same DS1 excluding mileage) -Zone 2		2	UNCVX	UEAL4	$33.17										
		Additional 4-Wire Analog Voice Grade Loop in same DS1 Interoffice Transport Combination - Zone 3	4-Wire Voice Grade Extended Loop With DS1 Dedicated Interoffice Transport (Additional 4-Wire 56 or 64 kbps in same DS1 excluding mileage) -Zone 3		3	UNCVX	UEAL4	$43.09										
		Nonrecurring Currently Combined Network Elements Switch -As-Is Charge	Non-Recurring Cost for Extended Loop or Local Channel and Interoffice combination Switch-as-is			UNC1X	UNCCC		$52.73	$24.62	$9.12	$9.12						
	4-WIRE 56 KBPS EXTENDED DIGITAL LOOP WITH DEDICATED DS1 INTEROFFICE TRANSPORT (EEL)																	
		First 4-Wire 56Kbps Digital Grade Loop/DS1 Interoffice Transport Combination - Zone 1	4-Wire 56 or 64 kbps Extended Digital Loop With Dedicated DS1 Interoffice Transport (First 4-Wire 56 or 64 kbps Digital Grade Loop with DS1 excluding mileage) - Zone 1		1	UNCDX	UDL56	$190.64										
		First 4-Wire 56Kbps Digital Grade Loop/DS1 Interoffice Transport Combination - Zone 2	4-Wire 56 or 64 kbps Extended Digital Loop With Dedicated DS1 Interoffice Transport (First 4-Wire 56 or 64 kbps Digital Grade Loop with DS1 excluding mileage) - Zone 2		2	UNCDX	UDL56	$200.16										
		First 4-Wire 56Kbps Digital Grade Loop/DS1 Interoffice Transport Combination - Zone 3	4-Wire 56 or 64 kbps Extended Digital Loop With Dedicated DS1 Interoffice Transport (First 4-Wire 56 or 64 kbps Digital Grade Loop with DS1 excluding mileage) - Zone 3		3	UNCDX	UDL56	$212.65										
		Interoffice Transport - Dedicated - DS1 combination - Per Mile Per Month	Interoffice Transport - Dedicated DS1 - Per Mile			UNC1X	1L5XX	$0.3562										
		Additional 4-Wire 56Kbps Digital Grade Loopin same DS1 Interoffice Transport Combination - Zone 1	4-Wire 56 or 64 kbps Extended Digital Loop With Dedicated DS1 Interoffice Transport (Additional 4-Wire 56 or 64 kbps Digital Grade Loop in same DS1 excluding mileage) -Zone 1		1	UNCDX	UDL56	$32.01										
		Additional 4-Wire 56Kbps Digital Grade Loopin same DS1 Interoffice Transport Combination - Zone 2	4-Wire 56 or 64 kbps Extended Digital Loop With Dedicated DS1 Interoffice Transport (Additional 4-Wire 56 or 64 kbps Digital Grade Loop in same DS1 excluding mileage) -Zone 2		2	UNCDX	UDL56	$41.52										
		Additional 4-Wire 56Kbps Digital Grade Loopin same DS1 Interoffice Transport Combination - Zone 3	4-Wire 56 or 64 kbps Extended Digital Loop With Dedicated DS1 Interoffice Transport (Additional 4-Wire 56 or 64 kbps Digital Grade Loop in same DS1 excluding mileage) -Zone 3		3	UNCDX	UDL56	$54.02										

		UNBUNDLED NETWORK ELEMENT	UNBUNDLED NETEORK ELEMENT AS STATED IN DOCKET 97-01262	Not in TRA Docket 97-01262	Zone	BCS	USOC	RATES					OSS RATES					
									Nonrecurring		Nonrecurring Disconnect		Svc Order Submitted Elec per LSR	Svc Order Submitted Manually per LSR	Incremental Charge - Manual Svc Order vs. Electronic-1st	Incremental Charge - Manual Svc Order vs. Electronic-Add'l	Incremental Charge - Manual Svc Order vs. Electronic-Disc 1st	Incremental Charge - Manual Svc Order vs. Electronic-Disc Add'l
								Rec	First	Add'l	First	Add'l	SOMEC	SOMAN	SOMAN	SOMAN	SOMAN	SOMAN
		Nonrecurring Currently Combined Network Elements Switch -As-Is Charge	Nonrecurring Cost for Extended Loop or Local Channel and Interoffice Combination Switch-as-is			UNC1X	UNCCC		$52.73	$24.62	$9.12	$9.12						
	4-WIRE 64 KBPS EXTENDED DIGITAL LOOP WITH DEDICATED DS1 INTEROFFICE TRANSPORT (EEL)																	
		First 4-Wire 64Kbps Digital Grade Loop/DS1 Interoffice Transport Combination - Zone 1	4-Wire 56 or 64 kbps Extended Digital Loop With Dedicated DS1 Interoffice Transport (First 4-Wire 56 or 64 kbps Digital Grade Loop with DS1 excluding mileage) - Zone 1		1	UNCDX	UDL64	$190.64										
		First 4-Wire 64Kbps Digital Grade Loop/DS1 Interoffice Transport Combination - Zone 2	4-Wire 56 or 64 kbps Extended Digital Loop With Dedicated DS1 Interoffice Transport (First 4-Wire 56 or 64 kbps Digital Grade Loop with DS1 excluding mileage) - Zone 2		2	UNCDX	UDL64	$200.16										
		First 4-Wire 64Kbps Digital Grade Loop/DS1 Interoffice Transport Combination - Zone 3	4-Wire 56 or 64 kbps Extended Digital Loop With Dedicated DS1 Interoffice Transport (First 4-Wire 56 or 64 kbps Digital Grade Loop with DS1 excluding mileage) - Zone 3		3	UNCDX	UDL64	$212.65										
		Interoffice Transport - Dedicated - DS1 combination - Per Mile Per Month	Interoffice Transport - Dedicated DS1 - Per Mile			UNC1X	1L5XX	$0.3562										
		Additional 4-Wire546Kbps Digital Grade Loopin same DS1 Interoffice Transport Combination - Zone 1	4-Wire 56 or 64 kbps Extended Digital Loop With Dedicated DS1 Interoffice Transport (Additional 4-Wire 56 or 64 kbps Digital Grade Loop in same DS1 excluding mileage) -Zone 1		1	UNCDX	UDL64	$32.01										
		Additional 4-Wire546Kbps Digital Grade Loopin same DS1 Interoffice Transport Combination - Zone 2	4-Wire 56 or 64 kbps Extended Digital Loop With Dedicated DS1 Interoffice Transport (Additional 4-Wire 56 or 64 kbps Digital Grade Loop in same DS1 excluding mileage) -Zone 2		2	UNCDX	UDL64	$41.52										
		Additional 4-Wire546Kbps Digital Grade Loopin same DS1 Interoffice Transport Combination - Zone 3	4-Wire 56 or 64 kbps Extended Digital Loop With Dedicated DS1 Interoffice Transport (Additional 4-Wire 56 or 64 kbps Digital Grade Loop in same DS1 excluding mileage) -Zone 3		3	UNCDX	UDL64	$54.02										
		Nonrecurring Currently Combined Network Elements Switch -As-Is Charge	Nonrecurring Cost for Extended Loop or Local Channel and Interoffice Combination Switch-as-is			UNC1X	UNCCC		$52.73	$24.62	$9.12	$9.12						
	2-WIRE VOICE GRADE DEDICATED EXTENDED LOCAL CHANNEL WITH DEDICATED DS1 INTEROFFICE TRANSPORT (EEL)																	
		First 2-Wire Local Channel with/DS1 Interoffice Transport Combination - Zone 1	Extended 2-Wire Voice Grade Dedicated Local Channel with Dedicated DS1 Interoffice Transport (First 2-Wire Local Channel with DS1 excluding mileage) - Zone 1		1			$176.72										

		UNBUNDLED NETWORK ELEMENT	UNBUNDLED NETEORK ELEMENT AS STATED IN DOCKET 97-01262	Not in TRA Docket 97-01262	Zone	BCS	USOC	RATES					OSS RATES					
									Nonrecurring		Nonrecurring Disconnect		Svc Order Submitted Elec per LSR	Svc Order Submitted Manually per LSR	Incremental Charge - Manual Svc Order vs. Electronic-1st	Incremental Charge - Manual Svc Order vs. Electronic-Add'l	Incremental Charge - Manual Svc Order vs. Electronic-Disc 1st	Incremental Charge - Manual Svc Order vs. Electronic-Disc Add'l
								Rec	First	Add'l	First	Add'l	SOMEC	SOMAN	SOMAN	SOMAN	SOMAN	SOMAN
		First 2-Wire Local Channel with/DS1 Interoffice Transport Combination - Zone 2	Extended 2-Wire Voice Grade Dedicated Local Channel with Dedicated DS1 Interoffice Transport (First 2-Wire Local Channel with DS1 excluding mileage) - Zone 2		2			$181.98										
		First 2-Wire Local Channel with/DS1 Interoffice Transport Combination - Zone 3	Extended 2-Wire Voice Grade Dedicated Local Channel with Dedicated DS1 Interoffice Transport (First 2-Wire Local Channel with DS1 excluding mileage) - Zone 3		3			$188.88										
		Interoffice Transport - Dedicated - DS1 combination - Per Mile Per Month	Interoffice Transport - Dedicated DS1 - Per Mile			UNC1X	U1TF1	$0.3562										
		Additional 2-Wire Voice Grade Channel in Same DSI Interoffice Transport Combination Zone 1	Extended 2-Wire Voice Grade Dedicated Local Channel with Dedicated DS1 Interoffice Transport (Additional 2-Wire Voice Grade Channel in same DS1 excluding mileage) -Zone 1		1			$18.09										
		Additional 2-Wire Voice Grade Channel in Same DSI Interoffice Transport Combination Zone 2	Extended 2-Wire Voice Grade Dedicated Local Channel with Dedicated DS1 Interoffice Transport (Additional 2-Wire Voice Grade Channel in same DS1 excluding mileage) -Zone 2		2			$23.35										
		Additional 2-Wire Voice Grade Channel in Same DSI Interoffice Transport Combination Zone 3	Extended 2-Wire Voice Grade Dedicated Local Channel with Dedicated DS1 Interoffice Transport (Additional 2-Wire Voice Grade Channel in same DS1 excluding mileage) -Zone 3		3			$30.25										
		Nonrecurring Currently Combined Network Elements Switch -As-Is Charge	Nonrecurring Cost for Extended Loop or Local Channel and Interoffice combination Switch-as-is			UNC1X	UNCCC		$52.73	$24.62	$9.12	$9.12						
	4-WIRE VOICE GRADE DEDICATED EXTENDED LOCAL CHANNEL WITH DEDICATED DS1 INTEROFFICE TRANSPORT (EEL)																	
		First 4-Wire Local Channel with/DS1 Interoffice Transport Combination - Zone 1	Extended 4-Wire Voice Grade Dedicated Local Channel with Dedicated DS1 Interoffice Transport (First 4-Wire Local Channel with DS1 excluding mileage) - Zone 1		1			$177.73										
		First 4-Wire Local Channel with/DS1 Interoffice Transport Combination - Zone 2	Extended 4-Wire Voice Grade Dedicated Local Channel with Dedicated DS1 Interoffice Transport (First 4-Wire Local Channel with DS1 excluding mileage) - Zone 2		2			$183.29										
		First 4-Wire Local Channel with/DS1 Interoffice Transport Combination - Zone 3	Extended 4-Wire Voice Grade Dedicated Local Channel with Dedicated DS1 Interoffice Transport (First 4-Wire Local Channel with DS1 excluding mileage) - Zone 3		3			$190.59										
		Interoffice Transport - Dedicated - DS1 combination - Per Mile Per Month	Interoffice Transport - Dedicated DS1 - Per Mile			UNC1X	U1TF1	$0.3562										

UNBUNDLED NETWORK ELEMENT	UNBUNDLED NETEORK ELEMENT AS STATED IN DOCKET 97-01262	Not in TRA Docket 97-01262	Zone	BCS	USOC	RATES					OSS RATES					
							Nonrecurring		Nonrecurring Disconnect		Svc Order Submitted Elec per LSR	Svc Order Submitted Manually per LSR	Incremental Charge - Manual Svc Order vs. Electronic-1st	Incremental Charge - Manual Svc Order vs. Electronic-Add'l	Incremental Charge - Manual Svc Order vs. Electronic-Disc 1st	Incremental Charge - Manual Svc Order vs. Electronic-Disc Add'l
						Rec	First	Add'l	First	Add'l	SOMEC	SOMAN	SOMAN	SOMAN	SOMAN	SOMAN
Additional 4-Wire Voice Grade Channel in Same DSI Interoffice Transport Combination Zone 1	Extended 4-Wire Voice Grade Dedicated Local Channel with Dedicated DS1 Interoffice Transport (Additional 4-Wire Voice Grade Channel in same DS1 excluding mileage) -Zone 1		1			$19.09										
Additional 4-Wire Voice Grade Channel in Same DSI Interoffice Transport Combination Zone 2	Extended 4-Wire Voice Grade Dedicated Local Channel with Dedicated DS1 Interoffice Transport (Additional 4-Wire Voice Grade Channel in same DS1 excluding mileage) -Zone 2		2			$24.66										
Additional 4-Wire Voice Grade Channel in Same DSI Interoffice Transport Combination Zone 3	Extended 4-Wire Voice Grade Dedicated Local Channel with Dedicated DS1 Interoffice Transport (Additional 4-Wire Voice Grade Channel in same DS1 excluding mileage) -Zone 3		3			$31.96										
Nonrecurring Currently Combined Network Elements Switch -As-Is Charge	Nonrecurring Cost for Extended Loop or Local Channel and Interoffice Combination Switch-as-is			UNC1X	UNCCC		$52.73	$24.62	$9.12	$9.12						
4-WIRE DS1 DIGITAL EXTENDED LOOP WITH DEDICATED DS1 INTEROFFICE TRANSPORT (EEL)																
First 4-Wire DS1 Digital Loop in Combination with DS1 Interoffice Transport - Zone 1	Extended 4-Wire DS1 Digital Loop With Dedicated DS1 Interoffice Transport (First 4-Wire DS1 Digital Loop with DS1 excluding mileage) Zone 1		1	UNC1X	USLXX	$135.59										
First 4-Wire DS1 Digital Loop in Combination with DS1 Interoffice Transport - Zone 2	Extended 4-Wire DS1 Digital Loop With Dedicated DS1 Interoffice Transport (First 4-Wire DS1 Digital Loop with DS1 excluding mileage) Zone 2		2	UNC1X	USLXX	$153.26										
First 4-Wire DS1 Digital Loop in Combination with DS1 Interoffice Transport - Zone 3	Extended 4-Wire DS1 Digital Loop With Dedicated DS1 Interoffice Transport (First 4-Wire DS1 Digital Loop with DS1 excluding mileage) Zone 3		3	UNC1X	USLXX	$176.45										
Interoffice Transport - Dedicated - DS1 combination - Facility Termination Per Month	Interoffice Transport - Dedicated - DS1 - Per Mile			UNC1X	U1TF1	$0.3562										
Additional 4-Wire DS1 Digital Loop in same same DS1 Interoffice Transport Combination Zone 1	Extended 4-Wire DS1 Digital Loop With Dedicated DS1 Interoffice Transport (Additional 4-Wire DS1 Digital Loop in same DS1 excluding mileage) - Zone 1		1	UNC1X	USLXX	$57.73										
Additional 4-Wire DS1 Digital Loop in same same DS1 Interoffice Transport Combination Zone 2	Extended 4-Wire DS1 Digital Loop With Dedicated DS1 Interoffice Transport (Additional 4-Wire DS1 Digital Loop in same DS1 excluding mileage) - Zone 2		2	UNC1X	USLXX	$75.40										

UNBUNDLED NETWORK ELEMENT	UNBUNDLED NETEORK ELEMENT AS STATED IN DOCKET 97-01262	Not in TRA Docket 97-01262	Zone	BCS	USOC	RATES					OSS RATES					
							Nonrecurring		Nonrecurring Disconnect		Svc Order Submitted Elec per LSR	Svc Order Submitted Manually per LSR	Incremental Charge - Manual Svc Order vs. Electronic-1st	Incremental Charge - Manual Svc Order vs. Electronic-Add'l	Incremental Charge - Manual Svc Order vs. Electronic-Disc 1st	Incremental Charge - Manual Svc Order vs. Electronic-Disc Add'l
						Rec	First	Add'l	First	Add'l	SOMEC	SOMAN	SOMAN	SOMAN	SOMAN	SOMAN
Additional 4-Wire DS1 Digital Loop in same same DS1 Interoffice Transport Combination Zone 3	Extended 4-Wire DS1 Digital Loop With Dedicated DS1 Interoffice Transport (Additional 4-Wire DS1 Digital Loop in same DS1 excluding mileage) - Zone 3		3	UNC1X	USLXX	$98.59										
Nonrecurring Currently Combined Network Elements Switch -As-Is Charge	Nonrecurring Cost for Extended Loop or Local Channel and Interoffice Combination Switch-as-is			UNC1X	UNCCC		$52.73	$24.62	$9.12	$9.12						
Currently Combined Network Transport Elements (Non-Switched Combinations Resulting from a Conversion)																
Local Channel - Dedicated - 2-Wire VG																
Monthly Recurring per month		**		UNCVX	ULDV2	$19.43	$199.33	$24.16	$54.81	$4.80			$20.35	$10.54	$13.30	
Monthly Recurring per mile per month		**		UNCVX	1L5NC	$0.00										
Local Channel - Dedicated - 2-Wire VG - Rev																
Monthly Recurring per month		**		UNCVX	ULDR2	$19.43	$199.33	$24.16	$54.81	$4.80			$20.35	$10.54	$13.30	
Monthly Recurring per mile per month		**		UNCVX	1L5NC	$0.00										
Local Channel - Dedicated - 4-Wire VG																
Monthly Recurring per month		**		UNCVX	ULDV4	$20.56	$201.53	$24.83	$55.52	$5.51			$20.35	$10.54	$13.30	
Monthly Recurring per mile per month		**		UNCVX	1L5NC	$0.00										
Local Channel - Dedicated - DS1																
DS1 Monthly Recurring per month		**		UNC1X	ULDF1	$20.56	$201.53	$24.83	$55.52	$5.51			$20.35	$10.54	$13.30	
Monthly Recurring per mile per month		**		UNC1X	1L5NC	$0.00										
Interoffice Channel - Dedicated - 2-wire VG																
Interoffice Channel - Dedicated 2-wire VG per mile per month		**		UNCVX	1L5XX	$0.0174										
Interoffice Channel - Dedicated 2-wire VG Facility Termination per month		**		UNCVX	U1TV2	$18.58	$55.39	$17.37	$27.96	$3.51			$20.35	$21.09	$9.80	$10.54
Interoffice Channel - Dedicated - 2-wire VG Rev Battery																
nteroffice Channel - Dedicated 2-wire VG per mile per month		**		UNCVX	1L5XX	$0.02										
nteroffice Channel - Dedicated 2-wire VG Facility Termination per month		**		UNCVX	U1TR2	$18.58	$55.39	$17.37	$27.96	$3.51			$20.35	$21.09	$9.80	$10.54
Interoffice Channel - Dedicated - 56kbps																
Interoffice Channel - Dedicated- 56 kbps per mile per month		**		UNCDX	1L5XX	$0.0174										
Interoffice Channel - Dedicated - 56 kbps Facility Termination per month		**		UNCDX	U1TD5	$17.98	$55.39	$17.37	$27.96	$3.51			$20.35	$21.09	$9.80	$10.54
Interoffice Channel - Dedicated - 64kbps																
Interoffice Channel - Dedicated - 64 kbps per mile per month		**		UNCDX	1L5XX	$0.02										
Interoffice Channel - Dedicated - 64 kbps Facility Termination per month		**		UNCDX	U1TD6	$17.98	$55.39	$17.37	$27.96	$3.51			$20.35	$21.09	$9.80	$10.54
Interoffice Channel - Dedicated - DS1																
Interoffice Channel - Dedicated - DS1 - pe mile per month		**		UNC1X	1L5XX	$0.3562										

UNBUNDLED NETWORK ELEMENT	UNBUNDLED NETEORK ELEMENT AS STATED IN DOCKET 97-01262	Not in TRA Docket 97-01262	Zone	BCS	USOC	RATES					OSS RATES					
							Nonrecurring		Nonrecurring		Svc Order Submitted Elec per LSR	Svc Order Submitted Manually per LSR	Incremental Charge - Manual Svc Order vs. Electronic-1st	Incremental Charge - Manual Svc Order vs. Electronic-Add'l	Incremental Charge - Manual Svc Order vs. Electronic-Disc 1st	Incremental Charge - Manual Svc Order vs. Electronic-Disc Add'l
									Disconnect							
		Rec	First	Add'l	First	Add'l	SOMEC	SOMAN	SOMAN	SOMAN	SOMAN	SOMAN
Interoffice Channel - Dedicated - DS1 Facility Termination per month		**		UNC1X	U1TF1	$77.86	$112.40	$76.27	$19.55	$14.99			$20.35	$21.09	$9.80	$10.54
Local Loop - Dedicated - 2-Wire VG																
Local Loop - Dedicated - 2-Wire VG Monthly Recurring per month - Zone 1		**	1	UNCVX	UEAL2	$16.56	$75.06	$48.20	$28.70	$17.64			$20.35	$10.54	$13.32	
Local Loop - Dedicated - 2-Wire VG Monthly Recurring per month - Zone 2		**	2	UNCVX	UEAL2	$21.63	$192.97	$140.72	$28.70	$17.64			$20.35	$10.54	$13.32	
Local Loop - Dedicated - 2-Wire VG Monthly Recurring per month - Zone 3		**	3	UNCVX	UEAL2	$28.28	$192.97	$140.72	$28.70	$17.64			$20.35	$10.54	$13.32	
Local Loop - Dedicated - 2-Wire VG Monthly Recurring per mile per month		**		UNCVX	1L5ND	$0.00										
Local Loop - Dedicated - 2-Wire VG - Rev Bat.																
Local Loop - Dedicated - 2-Wire VG - Rev Bat - Monthly Recurring per month - Zone 1		**	1	UNCVX	UEAR2	$16.56	$75.06	$48.20	$28.70	$17.64			$20.35	$10.54	$13.32	
Local Loop - Dedicated - 2-Wire VG - Rev Bat - Monthly Recurring per month - Zone 2		**	2	UNCVX	UEAR2	$21.63	$192.97	$140.72	$28.70	$17.64			$20.35	$10.54	$13.32	
Local Loop - Dedicated - 2-Wire VG - Rev Bat - Monthly Recurring per month - Zone 3		**	3	UNCVX	UEAR2	$28.28	$192.97	$140.72	$28.70	$17.64			$20.35	$10.54	$13.32	
Monthly Recurring per mile per month		**		UNCVX	1L5ND	$0.00										
Local Loop - Dedicated - 4-Wire VG																
Local Loop - Dedicated - 4-Wire VG Monthly Recurring per month - Zone 1		**	1	UNCVX	UEAL4	$24.70	$122.76	$85.57	$76.35	$39.16			$20.35	$10.54	$13.32	
Local Loop - Dedicated - 4-Wire VG Monthly Recurring per month - Zone 2		**	2	UNCVX	UEAL4	$32.25	$122.76	$85.57	$76.35	$39.16			$20.35	$10.54	$13.32	
Local Loop - Dedicated - 4-Wire VG Monthly Recurring per month - Zone 3		**	3	UNCVX	UEAL4	$42.17	$122.76	$85.57	$76.35	$39.16			$20.35	$10.54	$13.32	
Monthly Recurring per mile per month		**		UNCVX	1L5ND	$0.00										
Local Loop - Dedicated - 2-Wire ISDN Digital																
Local Loop - Dedicated - 2-Wire ISDN Monthly Recurring per month - Zone 1		**	1	UNCVX	U1L2X	$22.00	$142.76	$88.88	$76.35	$39.16			$20.35	$10.54	$13.32	
Local Loop - Dedicated - 2-Wire ISDN Monthly Recurring per month - Zone 2		**	2	UNCVX	U1L2X	$29.02	$142.76	$88.88	$76.35	$39.16			$20.35	$10.54	$13.32	
Local Loop - Dedicated - 2-Wire ISDN Monthly Recurring per month - Zone 3		**	3	UNCVX	U1L2X	$37.95	$142.76	$88.88	$76.35	$39.16			$20.35	$10.54	$13.32	
Monthly Recurring per mile per month		**		UNCVX	1L5ND	$0.00										
Local Loop - Dedicated - 4-Wire 56 kbps																
Local Loop - Dedicated - 4-Wire 56 kbps Digital - Monthly Recurring per month - Zone 1		**	1	UNCVX	UDL56	$31.10	$207.01	$141.38	$90.70	$44.18			$20.35	$10.54	$13.32	
Local Loop - Dedicated - 4-Wire 56 kbps Digital - Monthly Recurring per month - Zone 2		**	2	UNCVX	UDL56	$40.61	$207.01	$141.38	$90.70	$44.18			$20.35	$10.54	$13.32	
Local Loop - Dedicated - 4-Wire 56 kbps Digital - Monthly Recurring per month - Zone 3		**	3	UNCVX	UDL56	$53.11	$207.01	$141.38	$90.70	$44.18			$20.35	$10.54	$13.32	
4-Wire 56 kbps Digital Grade Loop per mile per month		**		UNCVX	1L5ND	$0.00										
Local Loop - Dedicated - 4-Wire 64 kbps																

UNBUNDLED NETWORK ELEMENT	UNBUNDLED NETEORK ELEMENT AS STATED IN DOCKET 97-01262	Not in TRA Docket 97-01262	Zone	BCS	USOC	RATES					OSS RATES					
							Nonrecurring		Nonrecurring		Svc Order Submitted Elec per LSR	Svc Order Submitted Manually per LSR	Incremental Charge - Manual Svc Order vs. Electronic-1st	Incremental Charge - Manual Svc Order vs. Electronic-Add'l	Incremental Charge - Manual Svc Order vs. Electronic-Disc 1st	Incremental Charge - Manual Svc Order vs. Electronic-Disc Add'l
									Disconnect							
						Rec	First	Add'l	First	Add'l	SOMEC	SOMAN	SOMAN	SOMAN	SOMAN	SOMAN
Local Loop - Dedicated - 4-Wire 64 kbps Digital - Monthly Recurring per month - Zone 1		**	1	UNCVX	UDL64	$31.10	$207.01	$141.38	$90.70	$44.18			$20.35	$10.54	$13.32	
Local Loop - Dedicated - 4-Wire 64 kbps Digital - Monthly Recurring per month - Zone 2		**	2	UNCVX	UDL64	$40.61	$207.01	$141.38	$90.70	$44.18			$20.35	$10.54	$13.32	
Local Loop - Dedicated - 4-Wire 64 kbps Digital - Monthly Recurring per month - Zone 3		**	3	UNCVX	UDL64	$53.11	$207.01	$141.38	$90.70	$44.18			$20.35	$10.54	$13.32	
4-Wire 64 kbps Digital Grade Loop per mile per month		**		UNCVX	1L5ND	$0.00										
Local Loop - Dedicated - DS1																
Local Loop - Dedicated - DS1 - Monthly Recurring per month - Zone 1		**	1	UNC1X	USLXX	$57.73	$313.08	$219.72	$96.86	$40.45			$18.98	$8.43	$11.95	
Local Loop - Dedicated - DS1 - Monthly Recurring per month - Zone 2		**	2	UNC1X	USLXX	$75.40	$313.08	$219.72	$96.86	$40.45			$18.98	$8.43	$11.95	
Local Loop - Dedicated - DS1 - Monthly Recurring per month - Zone 3		**	3	UNC1X	USLXX	$98.59	$313.08	$219.72	$96.86	$40.45			$18.98	$8.43	$11.95	
Local Loop - Dedicated - DS1 - Monthly Recurring per mile per month		**		UNC1X	1L5ND	$0.00										
DS1 Channelization																
DS1 to DS0 Channel System per month		**		UNC1X	MQ1	$80.77	$141.87	$77.11	$14.51	$13.46			$20.35	$9.80	$11.49	$1.18
OCU-DP COCI (data) - DS1 to DS0 Channe System - per month (2.4-64kbs)		**		UNCDX	1D1DD	$1.82	$6.07	$4.66					$20.35	$9.80	$11.49	$1.18
2-wire ISDN COCI (BRITE) - DS1 to DS0 Channel Systsem - per month		**		UNCNX	UC1CA	$3.10	$6.07	$4.66					$20.35	$9.80	$11.49	$1.18
Voice Grade COCI - DS1 to DS0 Channe System - per month		**		UNCVX	1D1VG	$0.91	$6.07	$4.66					$20.35	$9.80	$11.49	$1.18
MULTIPLEXERS																
DS3 to DS1 Channel System per month		**		UNC3X	MQ3	$222.98	$308.03	$108.47	$44.47	$42.62			$20.35	$9.80	$11.49	$1.18
STS1 to DS1 Channel System per month		**		UNCSX	MQ3	$222.98	$308.03	$108.47	$44.47	$42.62			$20.35	$9.80	$11.49	$1.18
DS3 Interface Unit (DS1 COCI) used with Loop per month		**		UNC1X	UC1D1	$17.58	$6.07	$4.66					$20.35	$9.80	$11.49	$1.18
* Rates for these elements, products or services were not ordered by the TRA in Docket No. 97-01262. However, such elements, products or services are necessary for the provision of other elements, products or services for which permanent rates were ordered.																
** Rates for these elements, products or services are related to a combination(s) ordered by the TRA in Docket No. 97-01262.																

UNBUNDLED NETWORK ELEMENT	UNBUNDLED NETWORK ELEMENT AS STATED IN DOCKET 97-01262	Not in TRA Docket 97-01262	Zone	BCS	USOC	RATES					OSS RATES					
							Nonrecurring		Nonrecurring Disconnect		Svc Order Sub-mitted Elec per LSR	Svc Order Submitted Manually per LSR	Incremental Charge - Manual Svc Order vs. Electronic-1st	Incremental Charge - Manual Svc Order vs. Electronic-Add'l	Incremental Charge - Manual Svc Order vs. Electronic-Disc 1st	Incremental Charge - Manual Svc Order vs. Electronic-Disc Add'l
						Rec	First	Add'l	First	Add'l	SOMEC	SOMAN	SOMAN	SOMAN	SOMAN	SOMAN
LOCAL INTERCONNECTION (CALL TRANSPORT AND TERMINATION																
END OFFICE SWITCHING																
End Office Switching Function, Per MO	End office switcing functio					$0.0008041										
TANDEM SWITCHING																
Tandem Switching Function Per MO	Tandem switching functio					$0.0009778										
LOCAL INTERCONNECTION (TRANSPORT																
COMMON TRANSPORT (Shared																
Common Transport - Per Mile, Per MO	Common transport - per mile, per MO					$0.0000064										
Common Transport - Facilities Termination P MOU	Common Transport - Facilities Termination per MOU					$0.0003871										
INTEROFFICE CHANNEL - DEDICATED TRANSPORT - VOICE GRAD																
Interoffice Channel - Dedicated Transport - Wire Voice Grade - Per Mile per month	Interoffice Transport - Dedicated - Voic Grade			U1TVX	1L5XF	$0.0174										
Interoffice Channel - Dedicated Transport- 2 Wire Voice Grade - Facility Termination per month	Interoffice Transport - Dedicated - 2-Wire Voice Grade - Facility Termination			U1TVX	1L5XF	$18.58	$55.39	$17.37	$27.96	$3.51			$20.35	$21.09	$9.80	$10.54
INTEROFFICE CHANNEL - DEDICATED TRANSPORT - 56/64 KBP																
Interoffice Channel - Dedicated Transport - 56 kbps - per mile per month	Interoffice Transport - Dedicated DSO 56/64 kbps - Interoffice Transport - Dedicated - DSO - per mile			U1TDX	1L5XK	$0.0174										
Interoffice Channel - Dedicated Transport - 56 kbps - Facility Termination per month	Interoffice Transport - Dedicated DSO 56/64 kbps - Interoffice Transport - Dedicated - DSO - Facility Termination			U1TDX	1L5XK	$17.98	$55.39	$17.37	$27.96	$3.51			$20.35	$21.09	$9.80	$10.54
Interoffice Channel - Dedicated Transport - 64 kbps - per mile per month	Interoffice Transport - Dedicated DSO 56/64 kbps - Interoffice Transport - Dedicated - DSO - per mile			U1TDX	1L5XK	$0.0174										
Interoffice Channel - Dedicated Transport - 64 kbps - Facility Termination per month	Interoffice Transport - Dedicated DSO 56/64 kbps - Interoffice Transport - Dedicated - DSO - Facility Termination			U1TDX	1L5XK	$17.98	$55.39	$17.37	$27.96	$3.51			$20.35	$21.09	$9.80	$10.54
INTEROFFICE CHANNEL - DEDICATED TRANSPORT - DS																
Interoffice Channel - Dedicated Channel - DS - Per Mile per month	Interoffice Transport - Dedicated - DS1 per mile			U1TD1	1L5XIL	$0.3562										
Interoffice Channel - Dedicated Tranport - DS - Facility Termination per month	Interoffice Transport - Dedicated - DS1 Facility Termination			U1TD1	1L5XIL	$77.86	$112.40	$76.27	$19.55	$14.99			$20.35	$21.09	$9.80	$10.54
LOCAL CHANNEL - DEDICATED TRANSPORT																
Local Channel - Deldicated - 2-Wire Voic Grade per month - Zone 1	Local Channel - Dedicated - 2-Wire Voic Grade [shown here deaveraged]		1	ULDVX	TEFV3	$17.18	$199.33	$24.16	$54.81	$4.80			$20.35	$10.54	$13.30	$0.00
Local Channel - Deldicated - 2-Wire Voic Grade per month - Zone 2	Local Channel - Dedicated - 2-Wire Voic Grade [shown here deaveraged]		2	ULDVX	TEFV3	$22.44	$199.33	$24.16	$54.81	$4.80			$20.35	$10.54	$13.30	$0.00
Local Cahnnel - Dedicated 2-Wire Voic Grade per month - Zone 3	Local Channel - Dedicated - 2-Wire Voic Grade [shown here deaveraged]		3	ULDVX	TEFV3	$29.34	$199.33	$24.16	$54.81	$4.80			$20.35	$10.54	$13.30	$0.00
Local Channel - Dedicated - 4-Wire Voic Grade per month - Zone 1	Local Channel - Dedicated - 4-Wire Voic Grade [shown here deaveraged]		1	ULDDX	TEFV4	$18.18	$201.53	$24.83	$55.52	$5.51			$20.35	$10.54	$13.30	$0.00
Local Channel - Dedicated - 4-Wire Voic Grade per month - Zone 2	Local Channel - Dedicated - 4-Wire Voic Grade [shown here deaveraged]		2	ULDDX	TEFV4	$23.74	$201.53	$24.83	$55.52	$5.51			$20.35	$10.54	$13.30	$0.00
Local Channel - Dedicated - 4-Wire Voic Grade per month - Zone 3	Local Channel - Dedicated - 4-Wire Voic Grade [shown here deaveraged]		3	ULDDX	TEFV4	$31.05	$201.53	$24.83	$55.52	$5.51			$20.35	$10.54	$13.30	$0.00
Local Channel - Dedicated - DS1 per month Zone 1	Local Channel - Dedicated - Dedicate DS1 [shown here deaveraged]		1	ULDD1	TEFHG	$36.24	$277.35	$233.26	$33.18	$22.30			$45.68	$1.76	$21.75	$1.76
Local Channel - Dedicated - DS1 per month Zone 2	Local Channel - Dedicated - Dedicate DS1 [shown here deaveraged]		2	ULDD1	TEFHG	$47.33	$277.35	$233.26	$33.18	$22.30			$45.68	$1.76	$21.75	$1.76

UNBUNDLED NETWORK ELEMENT	UNBUNDLED NETWORK ELEMENT AS STATED IN DOCKET 97-01262	Not in TRA Docket 97-01262	Zone	BCS	USOC	RATES					OSS RATES					
							Nonrecurring		Nonrecurring Disconnect		Svc Order Sub-mitted Elec per LSR	Svc Order Submitted Manually per LSR	Incremental Charge - Manual Svc Order vs. Electronic-1st	Incremental Charge - Manual Svc Order vs. Electronic-Add'l	Incremental Charge - Manual Svc Order vs. Electronic-Disc 1st	Incremental Charge - Manual Svc Order vs. Electronic-Disc Add'l
						Rec	First	Add'l	First	Add'l	SOMEC	SOMAN	SOMAN	SOMAN	SOMAN	SOMAN
Local Channel - Dedicated - DS1 per month Zone 3	Local Channel - Dedicated - Dedicated DS1 [shown here deaveraged]		3	ULDD1	TEFHG	$61.89	$277.35	$233.26	$33.18	$22.30			$45.68	$1.76	$21.75	$1.76
MULTIPLEXERS																
Channelization - DS1 to DS0 Channel System	Channelization - Channel System DS1 to DSO			UXTD1	SATC1	$80.77	$141.87	$77.11	$14.51	$13.46			$20.35	$9.80	$11.49	$1.18
OCU-DP COCI (data) - DS1 to DS0 Channe System - per month (2.4-64kbs)	Interface Unit - Interface DS1 to DSO - OCU - DP Card			UDL	SATSA	$1.82	$6.07	$4.66					$20.35	$9.80	$11.49	$1.18
2-wire ISDN COCI (BRITE) - DS1 to DS0 Channel Systsem - per month	Interface Unit - Interface DS1 to DSO - Brite Card			UDN	SATSA	$3.10	$6.07	$4.66					$20.35	$9.80	$11.49	$1.18
Voice Grade COCI - DS1 to DS0 Channe System - per month	Interface Unit - Interface DS1 to DSO - Voice Grade Card			UEA	SATSA	$.91	$6.07	$4.66					$20.35	$9.80	$11.49	$1.18
DS3 to DS1 Channel System per month	Channelization - Channel System DS3 to DS1			UXTD3	SATCS	$222.98	$308.03	$108.47	$44.47	$42.62			$20.35	$9.80	$11.49	$1.18
DS3 Interface Unit (DS1 COCI) per month	Interface Unit - Interface DS3 to DS			USL	SATCO	$17.58	$6.07	$4.66					$20.35	$9.80	$11.49	$1.18

		UNBUNDLED NETWORK ELEMENT	UNBUNDLED NETWORK ELEMENT AS STATED IN DOCKET 97-01262	Not In TRA Docket 97-01262	Zone	BCS	USOC	RATES					OSS RATES					
									Nonrecurring		Nonrecurring		Svc Order Submitted Elec per LSR	Svc Order Submitted Manually per LSR	Incremental Charge - Manual Svc Order vs. Electronic-1st	Incremental Charge - Manual Svc Order vs. Electronic-Add'l	Incremental Charge - Manual Svc Order vs. Electronic-Disc 1st	Incremental Charge - Manual Svc Order vs. Electronic-Disc Add'l
											Disconnect							
								Rec	First	Add'l	First	Add'l	SOMEC	SOMAN	SOMAN	SOMAN	SOMAN	SOMAN
ODUF/EDOUF/ADUF/CMDS																		
	OPTIONAL DAILY USAGE FILE (ODUF																	
		ODUF: Recording, per message	OSS OLEC Daily Usage File Recording per message				N/A	$0.0000044										
		ODUF: Message Processing, per message	OSS OLEC Daily Usage File Message Distribution per message				N/A	$0.0027366										
		ODUF: Message Processing, per Magnetic Tape provisioned	OSS OLEC Daily Usage File Message Distribution per magnetic tape provisioned				N/A	$52.75										
		ODUF: Data Transmission (CONNECT:DIRECT), per message	OSS OLEC Daily Usage File Data Transmission (Connect: Direct), per message				N/A	$0.0000339										

FIFTH AMENDMENT TO
INTERCONNECTION AGREEMENT BETWEEN
BELLSOUTH TELECOMMUNICATIONS, INC.
AND ACCESS INTEGRATED NETWORKS, INC.
DATED FEBRUARY 17, 2000

This Agreement (the "Amendment") is made and entered into between BellSouth Telecommunications, Inc. ("BellSouth") a Georgia corporation, and ACCESS Integrated Networks, Inc. ("ACCESS Integrated") a Georgia corporation.

WHEREAS, The Parties desire to amend that certain Interconnection Agreement between BellSouth and ACCESS Integrated dated February 17, 2000 (the "Interconnection Agreement") in order to incorporate the rate for Directory Assistance Access Service Calls, for the state of Tennessee;

NOW THEREFORE, in consideration of the mutual provisions contained herein and other good and valuable consideration, the receipt and sufficiency of which are hereby acknowledged, BellSouth and ACCESS Integrated hereby convenant and agree as follows:

1. The Parties agree to add the following rate to Attachment 2 – Exhibit C, of their existing Interconnection Agreement for the state of Tennessee:

Rate Element	**Rate**
Directory Assistance Access Service Calls, per call	$0.275

2. The Parties agree that all of the other provisions of the Interconnection Agreement, dated February 17, 2000, shall remain in full force and effect.

3. The Parties further agree that either or both of the Parties is authorized to submit this Amendment to the Tennessee Regulatory Authority or other regulatory body having jurisdiction over the subject matter of this Amendment, for approval subject to Section 252(e) of the federal Telecommunications Act of 1996.

This Amendment is made effective upon the date that it is signed by both Parties.

IN WITNESS WHEREOF, the parties hereto have caused this Amendment to be executed by their respective duly authorized representatives on the data indicated below.

BellSouth Telecommunications, Inc. **ACCESS Integrated Networks, Inc.**

Signature: _____	Signature: _____
Name: ____Greg Follensbee_____	Name: _____
Title: ____Senior Director_____	Title: _____
Date: _____	Date: _____

FOURTH AMENDMENT
TO THE
AGREEMENT BETWEEN
ACCESS INTEGRATED NETWORKS, INC.
AND
BELLSOUTH TELECOMMUNICATIONS, INC.
DATED FEBRUARY 17, 2000

Pursuant to this Amendment, (the "Amendment"), ACCESS Integrated Networks, Inc. ("ACCESS Integrated"), and BellSouth Telecommunications, Inc. ("BellSouth"), hereinafter referred to collectively as the "Parties," hereby agree to amend that certain Interconnection Agreement between the Parties dated February 17, 2000, ("Agreement").

WHEREAS, BellSouth and ACCESS Integrated entered into the Agreement on February 17, 2000, and;

NOW THEREFORE, in consideration of the mutual provisions contained herein and other good and valuable consideration, the receipt and sufficiency of which are hereby acknowledged, the Parties hereby covenant and agree as follows:

1. Attachment 2 of the Interconnection Agreement is hereby amended to add the following paragraph as 5.4.8 to Section 5.4, and the associated rates are added to Exhibit C attached hereto and incorporated herein by reference as Exhibit 1:

   5.4.8 4-wire DS1 Loop with normal serving wire center channelization interface, 2 wire voice grade ports (PBX), 2-wire DID ports, unbundled end office switching, unbundled end office trunk port, common transport per mile per MOU, common transport facilities termination, tandem switching, and tandem trunk port.

2. All of the other provisions of the Agreement, dated February 17, 2000, shall remain in full force and effect.

3. Either or both of the Parties is authorized to submit this Amendment to the respective state regulatory authorities for approval subject to Section 252(e) of the Federal Telecommunications Act of 1996.

IN WITNESS WHEREOF, the Parties hereto have caused this Amendment to be executed by their respective duly authorized representatives on the date indicated below.

ACCESS Integrated Networks, Inc.	**BellSouth Telecommunications, Inc.**
Signature on file	Signature on file
By: _____	By: _____
William T. Wright	Patrick C. Finlen
Name: _____	Name: _____
Title: President	Title: Managing Director
Date: April 23, 2001	Date: May 2, 2001

Exhibit 1
BellSouth/Access Integrated
Rates
Unbundled Network Elements
Port/Loop Combination
ALABAMA

SME	Ref	UNBUNDLED NETWORK ELEMENT	Filt	Line	Zone	BCS	USOC	RATES						OSS RATES					
									Nonrecurring		Nonrecurring Disconnect			Svc Order Submitted Elec per LSR	Svc Order Submitted Manually per LSR	Incremental Charge - Manual Svc Order vs. Electronic-1st	Incremental Charge - Manual Svc Order vs. Electronic-Add'l	Incremental Charge - Manual Svc Order vs. Electronic-Disc 1st	Incremental Charge - Manual Svc Order vs. Electronic-Disc Add'l
								Recurring	First	Add'l	First	Add'l	Source	SOMEC	SOMAN	SOMAN	SOMAN	SOMAN	SOMAN
	LEGEND: CA-COMMISSION APPROVED; CE=COMMISSION EFFECTIVE; CF=COMPLIANCE FILED; CS=COST STUDY; F=FILED.																		
	Unbundled Port / Loop Combinations																		
		COST BASED RATES																	
RL		**4-Wire DS1 Loop with Channelization with Port (UNE PORT/LOOP Combination)**																	
RL		**1 DS1 Loop, 1 D4 Bank, and D4 Channel Bank Feature Activation**																	
RL		**BCS - UEPMG**																	
RL		**UNE Port/Loop Combination Rates**																	
RL		4-Wire DS1 Loop w/ Channelization w/ Port Statewide	x		sw	UEPMG	**Note 1**												
RL		4-Wire DS1 Loop w/ Channelization w/ Port - Zone 1			1	UEPMG	**Note 1**												
RL		4-Wire DS1 Loop w/ Channelization w/ Port - Zone 2			2	UEPMG	**Note 1**												
RL		4-Wire DS1 Loop w/ Channelization w/ Port - Zone 3			3	UEPMG	**Note 1**												
RL		4-Wire DS1 Loop w/ Channelization w/ Port - Zone 4	x		4	UEPMG	**Note 1**												
RL		**UNE DS1 Loop Rates**																	
RL		4-Wire DS1 Digital Loop - Statewide	x		sw	UEPMG	USLDC	$0.00											
RL		4-Wire DS1 Digital Loop - Zone 1			1	UEPMG	USLDC	$101.92	$0.00	$0.00	$0.00	$0.00			$31.31				
RL		4-Wire DS1 Digital Loop - Zone 2			2	UEPMG	USLDC	$177.63	$0.00	$0.00	$0.00	$0.00			$31.31				
RL		4-Wire DS1 Digital Loop - Zone 3			3	UEPMG	USLDC	$329.04	$0.00	$0.00	$0.00	$0.00			$31.31				
RL		4-Wire DS1 Digital Loop - Zone 4	x		4	UEPMG	USLDC	$0.00	$0.00	$0.00	$0.00	$0.00							
RL		**UNE DS0 Channelization Capacities (Channel Banks)**																	
RL		24 DS0 Channelization Capacity - 1 per DS1				UEPMG	VUM24	$115.89	$0.00	$0.00	$0.00	$0.00			$31.31				
RL		48 DS0 Channelization Capacity - (Utilize 1 per 2 DS1s)				UEPMG	VUM48	$231.78	$0.00	$0.00	$0.00	$0.00			$31.31				
RL		96 DS0 Channelization Capacity - (Utilize 1 per 4 DS1s)				UEPMG	VUM96	$463.56	$0.00	$0.00	$0.00	$0.00			$31.31				
RL		144 DS0 Channelization Capacity - (Utilize 1 per 6 DS1s)				UEPMG	VUM14	$695.34	$0.00	$0.00	$0.00	$0.00			$31.31				
RL		192 DS0 Channelization Capacity - (Utilize 1 per 8 DS1s)				UEPMG	VUM19	$980.00	$0.00	$0.00	$0.00	$0.00			$31.31				
RL		240 DS0 Channelization Capacity - (Utilized 1 per 10 DS1s)				UEPMG	VUM20	$1,158.90	$0.00	$0.00	$0.00	$0.00			$31.31				
RL		288 DS0 Channelization Capacity - (Utilized 1 per 12 DS1s)				UEPMG	VUM28	$1,390.68	$0.00	$0.00	$0.00	$0.00			$31.31				
RL		384 DS0 Channelization Capacity - (Utilized 1 per 16 DS1s)				UEPMG	VUM38	$1,854.24	$0.00	$0.00	$0.00	$0.00			$31.31				
RL		480 DS0 Channelization Capacity - (Utilized 1 per 20 DS1s)				UEPMG	VUM40	$2,317.80	$0.00	$0.00	$0.00	$0.00			$31.31				
RL		576 DS0 Channelization Capacity - (Utilized 1 per 24 DS1s)				UEPMG	VUM57	$2,781.36	$0.00	$0.00	$0.00	$0.00			$31.31				
RL		672 DS0 Channelization Capacity - (Utilized 1 per 28 DS1s)				UEPMG	VUM67	$3,244.92	$0.00	$0.00	$0.00	$0.00			$31.31				

* This element may be removed before the 4Q matrix is final

Exhibit 1
BellSouth/Access Integrated
Rates
Unbundled Network Elements
Port/Loop Combination
ALABAMA

SME	Ref	UNBUNDLED NETWORK ELEMENT	Filt	Line	Zone	BCS	USOC	RATES						OSS RATES					
									Nonrecurring		Nonrecurring			Svc Order Submitted Elec per LSR	Svc Order Submitted Manually per LSR	Incremental Charge - Manual Svc Order vs. Electronic-1st	Incremental Charge - Manual Svc Order vs. Electronic-Add'l	Incremental Charge - Manual Svc Order vs. Electronic-Disc 1st	Incremental Charge - Manual Svc Order vs. Electronic-Disc Add'l
											Disconnect								
								Recurring	First	Add'l	First	Add'l	Source	SOMEC	SOMAN	SOMAN	SOMAN	SOMAN	SOMAN
	LEGEND: CA-COMMISSION APPROVED; CE=COMMISSION EFFECTIVE; CF=COMPLIANCE FILED; CS=COST STUDY; F=FILED.																		
		Non-Recurring Charges (NRC) Associated with 4-Wire DS1 Loop with Channelization with Port - Charges Based on a Converted System																	
		A converted system is defined as one (1) DS1, one (1) Channel Bank and up to 24 DS0s with Feature Activations																	
		NRC Conversion (Currently Combined) without Changes (Switch-as-Is)				UEPMG	USAC4	$0.00	$300.95	$16.72					$31.31				
		NRC Conversion (Currently Combined) with Allowec Changes				UEPMG	USAC4	$0.00	$300.95	$16.72					$31.31				
		Additional Service (Not Currently Combined) at a location with an existing DS1 Loop with Channelization with Port Combination																	
		Also New (Not Currently Combined In GA or by specific Contract																	
		NRC One (1) D4 Channel Bank and one(1) per new DS1 (add in NRC for each Port , Feature Activation, and Vertical Features Installed)				UEPMG	VUMD4	$0.00	$716.11	$468.04	$148.75	$17.65			$31.31				
		Bipolar 8 Zero Substitution (B8ZS)																	
		Clear channel capability, superframe -**Subsequent Activity only**				UEPMG	CCOSF	$0.00	$0.00	$600.00					$31.31				
		Clear channel capability, Extended superframe - **Subsequent Activity only**				UEPMG	CCOEF	$0.00	$0.00	$600.00					$31.31				
		Alternate Mark Inversion (AMI)																	
		Superframe format - **Subsequent Activity only**				UEPMG	MCOSF	$0.00	$0.00	$0.00					$31.31				
RL		Extended Superframe format -**Subsequent Activity Only**				UEPMG	MCOPO	$0.00	$0.00	$0.00									
		Exchange (DS0) Ports Associated with 4-Wire DS1 Loop with Channelization with Port																	
		Basic Class of Service -- UEPPX																	
RL		**Exchange Ports**																	
RL		Line Side Unbundled Combination 2-Way PBX Trunk Port - Business				UEPPX	UEPCX	$1.58	$0.00	$0.00	$4.19	$4.16			$31.31				
RL		Line Side Unbundled Outward PBX Trunk Port - Business				UEPPX	UEPOX	$1.58	$0.00	$0.00	$4.19	$4.16			$31.31				
RL		Line Side Unbundled Incoming PBX Trunk Port withou DID - Business				UEPPX	UEP1X	$1.58	$0.00	$0.00	$4.19	$4.16			$31.31				
RL		Trunk Side Unbundled PBX Trunk Port with DID - Business				UEPPX	UEPDM	$9.20	$0.00	$0.00	$59.24	$11.58			$31.31				
RL		**Feature Activations - Unbundled Loop Concentration**																	
		Feature (Service) Activation for Each Line Side Por Terminated in D4 Bank				UEPPX	1PQWM	$0.64	$25.39	$13.41	$0.00	$0.00			$31.31				
RL		Feature (Service) Activation for Each Trunk Side Por Terminated in D4 Bank				UEPPX	1PQWU	$0.64	$78.13	$18.42	$0.00	$0.00			$31.31				
RL		**Telephone Number/Trunk Group Establishment Charges For DID**																	
RL		DID Trunk Termination (One Per Port)				UEPPX	NDT	$0.00	$0.00	$0.00	$0.00	$0.00			$31.31				
RL		DID Numbers, Establish Trunk Group and Provide Firs Group of 20 DID Numbers (Valid in FL, NC,SC, & GA only)				UEPPX	NDZ	$0.00	$0.00	$0.00	$0.00	$0.00			$31.31				
RL		DID Numbers for each Group of 20 DID Numbers (VALID IN ALL STATES)				UEPPX	ND4	$0.00	$0.00	$0.00	$0.00	$0.00			$31.31				
RL		DID Numbers, Non- consecutive DID Numbers , Per Number				UEPPX	ND5	$0.00	$0.00	$0.00	$0.00	$0.00			$31.31				
		Reserving Non-consecutive DID numbers				UEPPX	ND6	$0.00	$0.00	$0.00	$0.00	$0.00			$31.31				
RL		Reserving DID numbers				UEPPX	NDV	$0.00	$0.00	$0.00	$0.00	$0.00			$31.31				

* This element may be removed before the 4Q matrix is final

Exhibit 1
BellSouth/Access Integrated
Rates
Unbundled Network Elements
Port/Loop Combination
ALABAMA

SME	Ref		UNBUNDLED NETWORK ELEMENT	Filt	Line	Zone	BCS	USOC	RATES						OSS RATES					
										Nonrecurring		Nonrecurring Disconnect			Svc Order Submitted Elec per LSR	Svc Order Submitted Manually per LSR	Incremental Charge - Manual Svc Order vs. Electronic-1st	Incremental Charge - Manual Svc Order vs. Electronic-Add'l	Incremental Charge - Manual Svc Order vs. Electronic-Disc 1st	Incremental Charge - Manual Svc Order vs. Electronic-Disc Add'l
									Recurring	First	Add'l	First	Add'l	Source	SOMEC	SOMAN	SOMAN	SOMAN	SOMAN	SOMAN
	LEGEND: CA-COMMISSION APPROVED; CE=COMMISSION EFFECTIVE; CF=COMPLIANCE FILED; CS=COST STUDY; F=FILED.																			
RL		LOCAL NUMBER PORTABILITY																		
RL			Local Number Portability (1 per port)				UEPPX	LNPCP	$3.15	$0.00	$0.00									
B.2		FEATURES - Vertical and Optional																		
RL		Local Switching Features offered with Line Side Ports																		
RL			All Features Offered				UEPPX	UEPVF	$2.64	$0.00	$0.00					$31.31				
		Note 1:																		
		No USOC exists for Port Loop Combinations - Use Individual Port USOC and Loop USOCs																		

* This element may be removed before the 4Q matrix is final

Exhibit 1
BellSouth/Access Integrated
Rates
Unbundled Network Elements
Port/Loop Combinations
FLORIDA

SME	Ref	UNBUNDLED NETWORK ELEMENT	Filt	Line	Zone	BCS	USOC	RATES						OSS RATES					
									Nonrecurring		Nonrecurring Disconnect			Svc Order Submitted Elec per LSR	Svc Order Submitted Manually per LSR	Incremental Charge - Manual Svc Order vs. Electronic-1st	Incremental Charge - Manual Svc Order vs. Electronic-Add'l	Incremental Charge - Manual Svc Order vs. Electronic-Disc 1st	Incremental Charge - Manual Svc Order vs. Electronic-Disc Add'l
								Recurring	First	Add'l	First	Add'l	Source	SOMEC	SOMAN	SOMAN	SOMAN	SOMAN	SOMAN
	LEGEND: CA-COMMISSION APPROVED; CE=COMMISSION EFFECTIVE; CF=COMPLIANCE FILED; CS=COST STUDY; F=FILED.																		
	Unbundled Port / Loop Combinations																		
		COST BASED RATES																	
RL		**4-Wire DS1 Loop with Channelization with Port (UNE PORT/LOOP Combination)**																	
RL		**1 DS1 Loop, 1 D4 Bank, and D4 Channel Bank Feature Activation**																	
RL		**BCS - UEPMG**																	
RL		**UNE Port/Loop Combination Rates**																	
RL		4-Wire DS1 Loop w/ Channelization w/ Port Statewide	x		sw	UEPMG	**Note 1**												
RL		4-Wire DS1 Loop w/ Channelization w/ Port - Zone 1			1	UEPMG	**Note 1**						CA						
RL		4-Wire DS1 Loop w/ Channelization w/ Port - Zone 2			2	UEPMG	**Note 1**						CA						
RL		4-Wire DS1 Loop w/ Channelization w/ Port - Zone 3			3	UEPMG	**Note 1**						CA						
RL		4-Wire DS1 Loop w/ Channelization w/ Port - Zone 4	x		4	UEPMG	**Note 1**												
RL		**UNE DS1 Loop Rates**																	
RL		4-Wire DS1 Digital Loop - Statewide	x		sw	UEPMG	USLDC								$21.56				$3.84
RL		4-Wire DS1 Digital Loop - Zone 1			1	UEPMG	USLDC	$92.48	$0.00	$0.00					$21.56				$3.84
RL		4-Wire DS1 Digital Loop - Zone 2			2	UEPMG	USLDC	$119.68	$0.00	$0.00					$21.56				$3.84
RL		4-Wire DS1 Digital Loop - Zone 3			3	UEPMG	USLDC	$194.70	$0.00	$0.00					$21.56				$3.84
RL		4-Wire DS1 Digital Loop - Zone 4	x		4	UEPMG	USLDC												
RL		**UNE DS0 Channelization Capacities (Channel Banks)**																	
RL		24 DS0 Channelization Capacity - 1 per DS1				UEPMG	VUM24	$123.64	$0.00	$0.00					$21.56				$3.84
RL		48 DS0 Channelization Capacity - (Utilize 1 per 2 DS1s)				UEPMG	VUM48	$247.28	$0.00	$0.00					$21.56				$3.84
RL		96 DS0 Channelization Capacity - (Utilize 1 per 4 DS1s)				UEPMG	VUM96	$494.56	$0.00	$0.00					$21.56				$3.84
RL		144 DS0 Channelization Capacity - (Utilize 1 per 6 DS1s)				UEPMG	VUM14	$741.84	$0.00	$0.00					$21.56				$3.84
RL		192 DS0 Channelization Capacity - (Utilize 1 per 8 DS1s)				UEPMG	VUM19	$989.12	$0.00	$0.00					$21.56				$3.84
RL		240 DS0 Channelization Capacity - (Utilized 1 per 10 DS1s)				UEPMG	VUM20	$1,236.40	$0.00	$0.00					$21.56				$3.84
RL		288 DS0 Channelization Capacity - (Utilized 1 per 12 DS1s)				UEPMG	VUM28	$1,483.68	$0.00	$0.00					$21.56				$3.84
RL		384 DS0 Channelization Capacity - (Utilized 1 per 16 DS1s)				UEPMG	VUM38	$1,978.24	$0.00	$0.00					$21.56				$3.84
RL		480 DS0 Channelization Capacity - (Utilized 1 per 20 DS1s)				UEPMG	VUM40	$2,472.80	$0.00	$0.00					$21.56				$3.84
RL		576 DS0 Channelization Capacity - (Utilized 1 per 24 DS1s)				UEPMG	VUM57	$2,967.36	$0.00	$0.00					$21.56				$3.84
RL		672 DS0 Channelization Capacity - (Utilized 1 per 28 DS1s)				UEPMG	VUM67	$3,461.92	$0.00	$0.00					$21.56				$3.84

* This element may be removed before the 4Q matrix is final

Exhibit 1
BellSouth/Access Integrated
Rates
Unbundled Network Elements
Port/Loop Combinations
FLORIDA

SME	Ref	UNBUNDLED NETWORK ELEMENT	Filt	Line	Zone	BCS	USOC	RATES						OSS RATES					
									Nonrecurring		Nonrecurring Disconnect			Svc Order Submitted Elec per LSR	Svc Order Submitted Manually per LSR	Incremental Charge - Manual Svc Order vs. Electronic-1st	Incremental Charge - Manual Svc Order vs. Electronic-Add'l	Incremental Charge - Manual Svc Order vs. Electronic-Disc 1st	Incremental Charge - Manual Svc Order vs. Electronic-Disc Add'l
								Recurring	First	Add'l	First	Add'l	Source	SOMEC	SOMAN	SOMAN	SOMAN	SOMAN	SOMAN
	LEGEND: CA-COMMISSION APPROVED; CE=COMMISSION EFFECTIVE; CF=COMPLIANCE FILED; CS=COST STUDY; F=FILED.																		
		Non-Recurring Charges (NRC) Associated with 4-Wire DS1 Loop with Channelization with Port - Charges Based on a System																	
		A System is defined as 1 DS1, 1 Channel Bank and up to 24 DS0s with Feature Activations																	
		NRC Conversion (Currently Combined) without Changes (Switch-as-Is)				UEPMG	USAC4	$0.00	$310.80	$16.72					$21.56				$3.84
		NRC Conversion (Currently Combined) with Allowed Changes				UEPMG	USAC4	$0.00	$310.80	$16.72					$21.56				$3.84
		Additional Service (Not Currently Combined) at a location with an existing DS1 Loop with Channelization with Port Combination																	
		Also New (Not Currently Combined In GA or by specific Contract																	
		NRC One (1) D4 Channel Bank and one(1) per new DS1 (add in NRC for each Port , Feature Activation, and Vertical Features Installed)				UEPMG	VUMD4	$0.00	$726.11	$468.21	$145.32	$17.24			$21.56				$3.84
		Bipolar 8 Zero Substitution (B8ZS)																	
		Clear channel capability, superframe -**Subsequent Activity only**				UEPMG	CCOSF	$0.00	$0.00	$655.00					$21.56				$3.84
		Clear channel capability, Extended superframe - **Subsequent Activity only**				UEPMG	CCOEF	$0.00	$0.00	$655.00					$21.56				$3.84
		Alternate Mark Inversion (AMI)																	
		Superframe format - **Subsequent Activity only**				UEPMG	MCOSF	$0.00	$0.00	$0.00					$21.56				$3.84
RL		Extended Superframe format -**Subsequent Activity Only**				UEPMG	MCOPO	$0.00	$0.00	$0.00									
		Exchange (DS0) Ports Associated with 4-Wire DS1 Loop with Channelization with Port																	
		Basic Class of Service -- UEPPX																	
RL		**Exchange Ports**																	
RL		Line Side Unbundled Combination 2-Way PBX Trunk Port - Business				UEPPX	UEPCX	$1.62	$0.00	$0.00	$3.96	$3.93	CA		$21.56				$3.84
RL		Line Side Unbundled Outward PBX Trunk Port - Business				UEPPX	UEPOX	$1.62	$0.00	$0.00	$3.96	$3.93	CA		$21.56				$3.84
RL		Line Side Unbundled Incoming PBX Trunk Port without DID - Business				UEPPX	UEP1X	$1.62	$0.00	$0.00	$3.96	$3.93	CA		$21.56				$3.84
RL		Trunk Side Unbundled PBX Trunk Port with DID - Business				UEPPX	UEPDM	$9.38	$0.00	$0.00	$56.03	$10.95			$21.56				$3.84
RL		**Feature Activations - Unbundled Loop Concentration**																	
		Feature (Service) Activation for Each Line Side Port Terminated in D4 Bank				UEPPX	1PQWM	$0.67	$25.40	$13.41	$0.00	$0.00			$21.56				$3.84
RL		Feature (Service) Activation for Each Trunk Side Port Terminated in D4 Bank				UEPPX	1PQWU	$0.67	$78.16	$18.42	$0.00	$0.00			$21.56				$3.84
RL		**Telephone Number/Trunk Group Establishment Charges For DID**																	
RL		DID Trunk Termination (One Per Port)				UEPPX	NDT	$0.00	$0.00	$0.00	$0.00	$0.00			$21.56				$3.84
RL		DID Numbers, Establish Trunk Group and Provide First Group of 20 DID Numbers (Valid in FL, NC,SC, & GA only)				UEPPX	NDZ	$0.00	$0.00	$0.00	$0.00	$0.00			$21.56				$3.84
RL		DID Numbers for each Group of 20 DID Numbers (VALID IN ALL STATES)				UEPPX	ND4	$0.00	$0.00	$0.00	$0.00	$0.00			$21.56				$3.84
RL		DID Numbers, Non- consecutive DID Numbers , Per Number				UEPPX	ND5	$0.00	$0.00	$0.00	$0.00	$0.00			$21.56				$3.84
		Reserving Non-consecutive DID numbers				UEPPX	ND6	$0.00	$0.00	$0.00	$0.00	$0.00			$21.56				$3.84
RL		Reserving DID numbers				UEPPX	NDV	$0.00	$0.00	$0.00	$0.00	$0.00			$21.56				$3.84

* This element may be removed before the 4Q matrix is final

Exhibit 1
BellSouth/Access Integrated Rates
Unbundled Network Elements
Port/Loop Combinations
FLORIDA

SME	Ref		UNBUNDLED NETWORK ELEMENT	Filt	Line	Zone	BCS	USOC	RATES						OSS RATES					
										Nonrecurring		Nonrecurring Disconnect			Svc Order Submitted Elec per LSR	Svc Order Submitted Manually per LSR	Incremental Charge - Manual Svc Order vs. Electronic-1st	Incremental Charge - Manual Svc Order vs. Electronic-Add'l	Incremental Charge - Manual Svc Order vs. Electronic-Disc 1st	Incremental Charge - Manual Svc Order vs. Electronic-Disc Add'l
									Recurring	First	Add'l	First	Add'l	Source	SOMEC	SOMAN	SOMAN	SOMAN	SOMAN	SOMAN
	LEGEND: CA-COMMISSION APPROVED; CE=COMMISSION EFFECTIVE; CF=COMPLIANCE FILED; CS=COST STUDY; F=FILED.																			
RL		LOCAL NUMBER PORTABILITY																		
RL			Local Number Portability (1 per port)				UEPPX	LNPCP	$3.15	$0.00	$0.00			CA						
B.2		FEATURES - Vertical and Optional																		
RL		Local Switching Features offered with Line Side Ports																		
RL			All Features Offered				UEPPX	UEPVF	$3.40	$0.00	$0.00					$21.56				$3.84
		Note 1:																		
		No USOC exists for Port Loop Combinations - Use Individual Port USOC and Loop USOCs																		

* This element may be removed before the 4Q matrix is final

Exhibit 1
BellSouth/Access Integrated
Rates
Unbundled Network Elements
Port/Loop Combinations
GEORGIA

SME	Ref	UNBUNDLED NETWORK ELEMENT	Filt	Line	Zone	BCS	USOC	RATES						OSS RATES					
									Nonrecurring		Nonrecurring Disconnect			Svc Order Submitted Elec per LSR	Svc Order Submitted Manually per LSR	Incremental Charge - Manual Svc Order vs. Electronic-1st	Incremental Charge - Manual Svc Order vs. Electronic-Add'l	Incremental Charge - Manual Svc Order vs. Electronic-Disc 1st	Incremental Charge - Manual Svc Order vs. Electronic-Disc Add'l
								Recurring	First	Add'l	First	Add'l	Source	SOMEC	SOMAN	SOMAN	SOMAN	SOMAN	SOMAN
	LEGEND: CA-COMMISSION APPROVED; CE=COMMISSION EFFECTIVE; CF=COMPLIANCE FILED; CS=COST STUDY; F=FILED.																		
	Unbundled Port / Loop Combinations																		
		COST BASED RATES																	
RL		**4-Wire DS1 Loop with Channelization with Port (UNE PORT/LOOP Combination)**																	
RL		**1 DS1 Loop, 1 D4 Bank, and D4 Channel Bank Feature Activation**																	
RL		**BCS - UEPMG**																	
RL		**UNE Port/Loop Combination Rates**																	
RL		4-Wire DS1 Loop w/ Channelization w/ Port Statewide	x		sw	UEPMG	**Note 1**												
RL		4-Wire DS1 Loop w/ Channelization w/ Port - Zone 1			1	UEPMG	**Note 1**												
RL		4-Wire DS1 Loop w/ Channelization w/ Port - Zone 2			2	UEPMG	**Note 1**												
RL		4-Wire DS1 Loop w/ Channelization w/ Port - Zone 3			3	UEPMG	**Note 1**												
RL		4-Wire DS1 Loop w/ Channelization w/ Port - Zone 4	x		4	UEPMG	**Note 1**												
RL		**UNE DS1 Loop Rates**																	
RL		4-Wire DS1 Digital Loop - Statewide	x		sw	UEPMG	USLDC	$0.00											
RL		4-Wire DS1 Digital Loop - Zone 1			1	UEPMG	USLDC	$55.53							$22.00				
RL		4-Wire DS1 Digital Loop - Zone 2			2	UEPMG	USLDC	$64.13							$22.00				
RL		4-Wire DS1 Digital Loop - Zone 3			3	UEPMG	USLDC	$101.93							$22.00				
RL		4-Wire DS1 Digital Loop - Zone 4	x		4	UEPMG	USLDC	$0.00	$0.00	$0.00									
RL		**UNE DS0 Channelization Capacities (Channel Banks)**																	
RL		24 DS0 Channelization Capacity - 1 per DS1				UEPMG	VUM24	$102.64	$0.00	$0.00	$0.00	$0.00			$22.00				
RL		48 DS0 Channelization Capacity - (Utilize 1 per 2 DS1s)				UEPMG	VUM48	$205.28	$0.00	$0.00	$0.00	$0.00			$22.00				
RL		96 DS0 Channelization Capacity - (Utilize 1 per 4 DS1s)				UEPMG	VUM96	$410.56	$0.00	$0.00	$0.00	$0.00			$22.00				
RL		144 DS0 Channelization Capacity - (Utilize 1 per 6 DS1s)				UEPMG	VUM14	$615.84	$0.00	$0.00	$0.00	$0.00			$22.00				
RL		192 DS0 Channelization Capacity - (Utilize 1 per 8 DS1s)				UEPMG	VUM19	$821.12	$0.00	$0.00	$0.00	$0.00			$22.00				
RL		240 DS0 Channelization Capacity - (Utilized 1 per 10 DS1s)				UEPMG	VUM20	$1,026.40	$0.00	$0.00	$0.00	$0.00			$22.00				
RL		288 DS0 Channelization Capacity - (Utilized 1 per 12 DS1s)				UEPMG	VUM28	$1,231.68	$0.00	$0.00	$0.00	$0.00			$22.00				
RL		384 DS0 Channelization Capacity - (Utilized 1 per 16 DS1s)				UEPMG	VUM38	$1,642.24	$0.00	$0.00	$0.00	$0.00			$22.00				
RL		480 DS0 Channelization Capacity - (Utilized 1 per 20 DS1s)				UEPMG	VUM40	$2,052.80	$0.00	$0.00	$0.00	$0.00			$22.00				
RL		576 DS0 Channelization Capacity - (Utilized 1 per 24 DS1s)				UEPMG	VUM57	$2,463.36	$0.00	$0.00	$0.00	$0.00			$22.00				
RL		672 DS0 Channelization Capacity - (Utilized 1 per 28 DS1s)				UEPMG	VUM67	$2,873.92	$0.00	$0.00	$0.00	$0.00			$22.00				

* This element may be removed before the 4Q matrix is final

Exhibit 1
BellSouth/Access Integrated Rates
Unbundled Network Elements
Port/Loop Combinations
GEORGIA

SME	Ref	UNBUNDLED NETWORK ELEMENT	Filt	Line	Zone	BCS	USOC	RATES						OSS RATES					
									Nonrecurring		Nonrecurring			Svc Order Submitted Elec per LSR	Svc Order Submitted Manually per LSR	Incremental Charge - Manual Svc Order vs. Electronic-1st	Incremental Charge - Manual Svc Order vs. Electronic-Add'l	Incremental Charge - Manual Svc Order vs. Electronic-Disc 1st	Incremental Charge - Manual Svc Order vs. Electronic-Disc Add'l
											Disconnect								
								Recurring	First	Add'l	First	Add'l	Source	SOMEC	SOMAN	SOMAN	SOMAN	SOMAN	SOMAN
	LEGEND: CA-COMMISSION APPROVED; CE=COMMISSION EFFECTIVE; CF=COMPLIANCE FILED; CS=COST STUDY; F=FILED.																		
		Non-Recurring Charges (NRC) Associated with 4-Wire DS1 Loop with Channelization with Port -Charges Based on a System																	
		A System is defined as 1 DS1, 1 Channel Bank and up to 24 DS0s with Feature Activations																	
		NRC Conversion (Currently Combined) without Changes (Switch-as-Is)				UEPMG	USAC4	$0.00	$328.35	$16.52					$22.00				
		NRC Conversion (Currently Combined) with Allowec Changes				UEPMG	USAC4	$0.00	$328.35	$16.52					$22.00				
		Additional Service (Not Currently Combined) at a location with an existing DS1 Loop with Channelization with Port Combination																	
		Also New (Not Currently Combined In GA or by specific Contract																	
		NRC One (1) D4 Channel Bank and one(1) per new DS1 (add in NRC for each Port , Feature Activation, and Vertical Features Installed)				UEPMG	VUMD4	$0.00	$738.61	$462.53	$144.05	$17.09			$22.00				
		Bipolar 8 Zero Substitution (B8ZS)																	
		Clear channel capability, superframe -**Subsequent Activity only**				UEPMG	CCOSF	$0.00	$0.00	$600.00					$22.00				
		Clear channel capability, Extended superframe - **Subsequent Activity only**				UEPMG	CCOEF	$0.00	$0.00	$600.00					$22.00				
		Alternate Mark Inversion (AMI)																	
		Superframe format - **Subsequent Activity only**				UEPMG	MCOSF	$0.00	$0.00	$0.00					$22.00				
RL		Extended Superframe format -**Subsequent Activity Only**				UEPMG	MCOPO	$0.00	$0.00	$0.00									
		Exchange (DS0) Ports Associated with 4-Wire DS1 Loop with Channelization with Port																	
		Basic Class of Service -- UEPPX																	
RL		**Exchange Ports**																	
RL		Line Side Unbundled Combination 2-Way PBX Trunk Port - Business				UEPPX	UEPCX	$1.79	$0.00	$0.00	$3.99	$3.97			$22.00				
RL		Line Side Unbundled Outward PBX Trunk Port - Business				UEPPX	UEPOX	$1.79	$0.00	$0.00	$3.99	$3.97			$22.00				
RL		Line Side Unbundled Incoming PBX Trunk Port withou DID - Business				UEPPX	UEP1X	$1.79	$0.00	$0.00	$3.99	$3.97			$22.00				
RL		Trunk Side Unbundled PBX Trunk Port with DID - Business				UEPPX	UEPDM	$11.35	$0.00	$0.00	$56.49	$11.04			$22.00				
RL		**Feature Activations - Unbundled Loop Concentration**																	
		Feature (Service) Activation for Each Line Side Por Terminated in D4 Bank				UEPPX	1PQWM	$0.62	$25.09	$13.25					$22.00				
RL		Feature (Service) Activation for Each Trunk Side Por Terminated in D4 Bank				UEPPX	1PQWU	$0.62	$77.21	$18.20					$22.00				
RL		**Telephone Number/Trunk Group Establishment Charges For DID**																	
RL		DID Trunk Termination (One Per Port)				UEPPX	NDT	$0.00	$0.00	$0.00	$0.00	$0.00			$22.00				
RL		DID Numbers, Establish Trunk Group and Provide Firs Group of 20 DID Numbers (Valid in FL, NC,SC, & GA only)				UEPPX	NDZ	$0.00	$0.00	$0.00	$0.00	$0.00			$22.00				
RL		DID Numbers for each Group of 20 DID Numbers (VALID IN ALL STATES)				UEPPX	ND4	$0.00	$0.00	$0.00	$0.00	$0.00			$22.00				
RL		DID Numbers, Non- consecutive DID Numbers , Per Number				UEPPX	ND5	$0.00	$0.00	$0.00	$0.00	$0.00			$22.00				
		Reserving Non-consecutive DID numbers				UEPPX	ND6	$0.00	$0.00	$0.00	$0.00	$0.00			$22.00				
RL		Reserving DID numbers				UEPPX	NDV	$0.00	$0.00	$0.00	$0.00	$0.00			$19.99				

* This element may be removed before the 4Q matrix is final

Exhibit 1
BellSouth/Access Integrated
Rates
Unbundled Network Elements
Port/Loop Combinations
GEORGIA

SME	Ref		UNBUNDLED NETWORK ELEMENT	Filt	Line	Zone	BCS	USOC	RATES						OSS RATES					
										Nonrecurring		Nonrecurring Disconnect			Svc Order Submitted Elec per LSR	Svc Order Submitted Manually per LSR	Incremental Charge - Manual Svc Order vs. Electronic-1st	Incremental Charge - Manual Svc Order vs. Electronic-Add'l	Incremental Charge - Manual Svc Order vs. Electronic-Disc 1st	Incremental Charge - Manual Svc Order vs. Electronic-Disc Add'l
									Recurring	First	Add'l	First	Add'l	Source	SOMEC	SOMAN	SOMAN	SOMAN	SOMAN	SOMAN
	LEGEND: CA-COMMISSION APPROVED; CE=COMMISSION EFFECTIVE; CF=COMPLIANCE FILED; CS=COST STUDY; F=FILED.																			
RL		LOCAL NUMBER PORTABILITY																		
RL			Local Number Portability (1 per port)				UEPPX	LNPCP	$3.15	$0.00	$0.00									
B.2		FEATURES - Vertical and Optional																		
RL		Local Switching Features offered with Line Side Ports																		
RL			All Features Offered				UEPPX	UEPVF	$0.00	$0.00	$0.00					$22.00				
		Note 1:																		
		No USOC exists for Port Loop Combinations - Use Individual Port USOC and Loop USOCs																		

* This element may be removed before the 4Q matrix is final

Exhibit 1
BellSouth/Access Integrated
Rates
Unbundled Network Elements
Loop/Port Combinations
KENTUCKY

SME	Ref	UNBUNDLED NETWORK ELEMENT	Filt	Line	Zone	BCS	USOC	RATES						OSS RATES					
									Nonrecurring		Nonrecurring			Svc Order Submitted Elec per LSR	Svc Order Submitted Manually per LSR	Incremental Charge - Manual Svc Order vs. Electronic-1st	Incremental Charge - Manual Svc Order vs. Electronic-Add'l	Incremental Charge - Manual Svc Order vs. Electronic-Disc 1st	Incremental Charge - Manual Svc Order vs. Electronic-Disc Add'l
								Recurring	First	Add'l	Disconnect First	Disconnect Add'l	Source	SOMEC	SOMAN	SOMAN	SOMAN	SOMAN	SOMAN
	LEGEND: CA-COMMISSION APPROVED; CE=COMMISSION EFFECTIVE; CF=COMPLIANCE FILED; CS=COST STUDY; F=FILED.																		
	Unbundled Port / Loop Combinations																		
		COST BASED RATES																	
RL		**4-Wire DS1 Loop with Channelization with Port (UNE PORT/LOOP Combination)**																	
RL		**1 DS1 Loop, 1 D4 Bank, and D4 Channel Bank Feature Activation**																	
RL		**BCS - UEPMG**																	
RL		**UNE Port/Loop Combination Rates**																	
RL		4-Wire DS1 Loop w/ Channelization w/ Port Statewide	x		sw	UEPMG	**Note 1**												
RL		4-Wire DS1 Loop w/ Channelization w/ Port - Zone 1			1	UEPMG	**Note 1**												
RL		4-Wire DS1 Loop w/ Channelization w/ Port - Zone 2			2	UEPMG	**Note 1**												
RL		4-Wire DS1 Loop w/ Channelization w/ Port - Zone 3			3	UEPMG	**Note 1**												
RL		4-Wire DS1 Loop w/ Channelization w/ Port - Zone 4	x		4	UEPMG	**Note 1**												
RL		**UNE DS1 Loop Rates**																	
RL		4-Wire DS1 Digital Loop - Statewide	x		sw	UEPMG	USLDC	$0.00											
RL		4-Wire DS1 Digital Loop - Zone 1			1	UEPMG	USLDC	$106.04							$31.32				$3.94
RL		4-Wire DS1 Digital Loop - Zone 2			2	UEPMG	USLDC	$135.15							$31.32				$3.94
RL		4-Wire DS1 Digital Loop - Zone 3			3	UEPMG	USLDC	$186.26							$31.32				$3.94
RL		4-Wire DS1 Digital Loop - Zone 4	x		4	UEPMG	USLDC	$0.00	$0.00	$0.00									
RL		**UNE DS0 Channelization Capacities (Channel Banks)**																	
RL		24 DS0 Channelization Capacity - 1 per DS1				UEPMG	VUM24	$136.99	$0.00	$0.00	$0.00	$0.00			$31.32				$3.94
RL		48 DS0 Channelization Capacity - (Utilize 1 per 2 DS1s)				UEPMG	VUM48	$273.98	$0.00	$0.00	$0.00	$0.00			$31.32				$3.94
RL		96 DS0 Channelization Capacity - (Utilize 1 per 4 DS1s)				UEPMG	VUM96	$547.96	$0.00	$0.00	$0.00	$0.00			$31.32				$3.94
RL		144 DS0 Channelization Capacity - (Utilize 1 per 6 DS1s)				UEPMG	VUM14	$821.94	$0.00	$0.00	$0.00	$0.00			$31.32				$3.94
RL		192 DS0 Channelization Capacity - (Utilize 1 per 8 DS1s)				UEPMG	VUM19	$1,095.92	$0.00	$0.00	$0.00	$0.00			$31.32				$3.94
RL		240 DS0 Channelization Capacity - (Utilized 1 per 10 DS1s)				UEPMG	VUM20	$1,369.90	$0.00	$0.00	$0.00	$0.00			$31.32				$3.94
RL		288 DS0 Channelization Capacity - (Utilized 1 per 12 DS1s)				UEPMG	VUM28	$1,643.88	$0.00	$0.00	$0.00	$0.00			$31.32				$3.94
RL		384 DS0 Channelization Capacity - (Utilized 1 per 16 DS1s)				UEPMG	VUM38	$2,191.84	$0.00	$0.00	$0.00	$0.00			$31.32				$3.94
RL		480 DS0 Channelization Capacity - (Utilized 1 per 20 DS1s)				UEPMG	VUM40	$2,739.80	$0.00	$0.00	$0.00	$0.00			$31.32				$3.94
RL		576 DS0 Channelization Capacity - (Utilized 1 per 24 DS1s)				UEPMG	VUM57	$3,287.76	$0.00	$0.00	$0.00	$0.00			$31.32				$3.94
RL		672 DS0 Channelization Capacity - (Utilized 1 per 28 DS1s)				UEPMG	VUM67	$3,835.72	$0.00	$0.00	$0.00	$0.00			$31.32				$3.94

* This element may be removed before the 4Q matrix is final

Exhibit 1
BellSouth/Access Integrated
Rates
Unbundled Network Elements
Loop/Port Combinations
KENTUCKY

SME	Ref	UNBUNDLED NETWORK ELEMENT	Filt	Line	Zone	BCS	USOC	RATES						OSS RATES					
									Nonrecurring		Nonrecurring			Svc Order Submitted Elec per LSR	Svc Order Submitted Manually per LSR	Incremental Charge - Manual Svc Order vs. Electronic-1st	Incremental Charge - Manual Svc Order vs. Electronic-Add'l	Incremental Charge - Manual Svc Order vs. Electronic-Disc 1st	Incremental Charge - Manual Svc Order vs. Electronic-Disc Add'l
								Recurring	First	Add'l	Disconnect First	Disconnect Add'l	Source	SOMEC	SOMAN	SOMAN	SOMAN	SOMAN	SOMAN
	LEGEND: CA-COMMISSION APPROVED; CE=COMMISSION EFFECTIVE; CF=COMPLIANCE FILED; CS=COST STUDY; F=FILED.																		
		Non-Recurring Charges (NRC) Associated with 4-Wire DS1 Loop with Channelization with Port -Charges Based on a System																	
		A System is defined as 1 DS1, 1 Channel Bank and up to 24 DS0s with Feature Activations																	
		NRC Conversion (Currently Combined) without Changes (Switch-as-Is)				UEPMG	USAC4	$0.00	$301.05	$16.72					$31.32				$3.94
		NRC Conversion (Currently Combined) with Allowec Changes				UEPMG	USAC4	$0.00	$301.05	$16.72					$31.32				$3.94
		Additional Service (Not Currently Combined) at a location with an existing DS1 Loop with Channelization with Port Combination																	
		Also New (Not Currently Combined In GA or by specific Contract																	
		NRC One (1) D4 Channel Bank and one(1) per new DS1 (add in NRC for each Port , Feature Activation, and Vertical Features Installed)				UEPMG	VUMD4	$0.00	$716.36	$468.20	$149.30	$17.71			$31.32				$3.94
		Bipolar 8 Zero Substitution (B8ZS)																	
		Clear channel capability, superframe -**Subsequent Activity only**				UEPMG	CCOSF	$0.00	$0.00	$730.00					$31.32				$3.94
		Clear channel capability, Extended superframe - **Subsequent Activity only**				UEPMG	CCOEF	$0.00	$0.00	$730.00					$31.32				$3.94
		Alternate Mark Inversion (AMI)																	
		Superframe format - **Subsequent Activity only**				UEPMG	MCOSF	$0.00	$0.00	$0.00					$31.32				$3.94
RL		Extended Superframe format -**Subsequent Activity Only**				UEPMG	MCOPO	$0.00	$0.00	$0.00									
		Exchange (DS0) Ports Associated with 4-Wire DS1 Loop with Channelization with Port																	
		Basic Class of Service -- UEPPX																	
RL		**Exchange Ports**																	
RL		Line Side Unbundled Combination 2-Way PBX Trunk Port - Business				UEPPX	UEPCX	$1.66	$0.00	$0.00	$4.17	$4.15			$31.32				$3.94
RL		Line Side Unbundled Outward PBX Trunk Port - Business				UEPPX	UEPOX	$1.66	$0.00	$0.00	$4.17	$4.15			$31.32				$3.94
RL		Line Side Unbundled Incoming PBX Trunk Port withou DID - Business				UEPPX	UEP1X	$1.66	$0.00	$0.00	$4.17	$4.15			$31.32				$3.94
RL		Trunk Side Unbundled PBX Trunk Port with DID - Business				UEPPX	UEPDM	$10.97	$0.00	$0.00	$59.05	$11.54			$31.32				$3.94
RL		**Feature Activations - Unbundled Loop Concentration**																	
		Feature (Service) Activation for Each Line Side Poi Terminated in D4 Bank				UEPPX	1PQWM	$0.77	$25.40	$13.41					$31.32				$3.94
RL		Feature (Service) Activation for Each Trunk Side Por Terminated in D4 Bank				UEPPX	1PQWU	$0.77	$78.15	$19.68					$31.32				$3.94
RL		**Telephone Number/Trunk Group Establishment Charges For DID**																	
RL		DID Trunk Termination (One Per Port)				UEPPX	NDT	$0.00	$0.00	$0.00	$0.00	$0.00			$31.32				$3.94
RL		DID Numbers, Establish Trunk Group and Provide Firs Group of 20 DID Numbers (Valid in FL, NC,SC, & GA only)				UEPPX	NDZ	$0.00	$0.00	$0.00	$0.00	$0.00			$31.32				$3.94
RL		DID Numbers for each Group of 20 DID Numbers (VALID IN ALL STATES)				UEPPX	ND4	$0.00	$0.00	$0.00	$0.00	$0.00			$31.32				$3.94
RL		DID Numbers, Non- consecutive DID Numbers , Per Number				UEPPX	ND5	$0.00	$0.00	$0.00	$0.00	$0.00			$31.32				$3.94
		Reserving Non-consecutive DID numbers				UEPPX	ND6	$0.00	$0.00	$0.00	$0.00	$0.00			$31.32				$3.94
RL		Reserving DID numbers				UEPPX	NDV	$0.00	$0.00	$0.00	$0.00	$0.00			$31.32				$3.94

* This element may be removed before the 4Q matrix is final

Exhibit 1
BellSouth/Access Integrated
Rates
Unbundled Network Elements
Loop/Port Combinations
KENTUCKY

SME	Ref		UNBUNDLED NETWORK ELEMENT	Filt	Line	Zone	BCS	USOC	RATES						OSS RATES					
										Nonrecurring		Nonrecurring Disconnect			Svc Order Submitted Elec per LSR	Svc Order Submitted Manually per LSR	Incremental Charge - Manual Svc Order vs. Electronic-1st	Incremental Charge - Manual Svc Order vs. Electronic-Add'l	Incremental Charge - Manual Svc Order vs. Electronic-Disc 1st	Incremental Charge - Manual Svc Order vs. Electronic-Disc Add'l
									Recurring	First	Add'l	First	Add'l	Source	SOMEC	SOMAN	SOMAN	SOMAN	SOMAN	SOMAN
	LEGEND: CA-COMMISSION APPROVED; CE=COMMISSION EFFECTIVE; CF=COMPLIANCE FILED; CS=COST STUDY; F=FILED.																			
RL		LOCAL NUMBER PORTABILITY																		
RL			Local Number Portability (1 per port)				UEPPX	LNPCP	$3.15	$0.00	$0.00									
B.2		FEATURES - Vertical and Optional																		
RL		Local Switching Features offered with Line Side Ports																		
RL			All Features Offered				UEPPX	UEPVF	$3.39	$0.00	$0.00					$31.32				$3.94
		Note 1:																		
		No USOC exists for Port Loop Combinations - Use Individual Port USOC and Loop USOCs																		

* This element may be removed before the 4Q matrix is final

Exhibit 1
BellSouth/Access Integrated
Rates
Unbundled Network Elements
Loop/Port Combinations
LOUISIANA

SME	Ref			Filt	Line	Zone	BCS	USOC	RATES						OSS RATES					
										Nonrecurring		Nonrecurring Disconnect			Svc Order Submitted Elec per LSR	Svc Order Submitted Manually per LSR	Incremental Charge - Manual Svc Order vs. Electronic-1st	Incremental Charge - Manual Svc Order vs. Electronic-Add'l	Incremental Charge - Manual Svc Order vs. Electronic-Disc 1st	Incremental Charge - Manual Svc Order vs. Electronic-Disc Add'l
									Recurring	First	Add'l	First	Add'l	Source	SOMEC	SOMAN	SOMAN	SOMAN	SOMAN	SOMAN
	LEGEND: CA-COMMISSION APPROVED; CE=COMMISSION EFFECTIVE; CF=COMPLIANCE FILED; CS=COST STUDY; F=FILED.																			
	Unbundled Port / Loop Combinations																			
		COST BASED RATES																		
RL		**4-Wire DS1 Loop with Channelization with Port (UNE PORT/LOOP Combination)**																		
RL		**1 DS1 Loop, 1 D4 Bank, and D4 Channel Bank Feature Activation**																		
RL		**BCS - UEPMG**																		
RL		**UNE Port/Loop Combination Rates**																		
RL		4-Wire DS1 Loop w/ Channelization w/ Port Statewide		x		sw	UEPMG	**Note 1**												
RL		4-Wire DS1 Loop w/ Channelization w/ Port - Zone 1				1	UEPMG	**Note 1**												
RL		4-Wire DS1 Loop w/ Channelization w/ Port - Zone 2				2	UEPMG	**Note 1**												
RL		4-Wire DS1 Loop w/ Channelization w/ Port - Zone 3				3	UEPMG	**Note 1**												
RL		4-Wire DS1 Loop w/ Channelization w/ Port - Zone 4		x		4	UEPMG	**Note 1**												
RL		**UNE DS1 Loop Rates**																		
RL			4-Wire DS1 Digital Loop - Statewide	x		sw	UEPMG	USLDC	$0.00											
RL			4-Wire DS1 Digital Loop - Zone 1			1	UEPMG	USLDC	$100.42							$31.27				$3.92
RL			4-Wire DS1 Digital Loop - Zone 2			2	UEPMG	USLDC	$128.71							$31.27				$3.92
RL			4-Wire DS1 Digital Loop - Zone 3			3	UEPMG	USLDC	$256.06							$31.27				$3.92
RL			4-Wire DS1 Digital Loop - Zone 4	x		4	UEPMG	USLDC	$0.00	$0.00	$0.00									
RL		**UNE DS0 Channelization Capacities (Channel Banks)**																		
RL			24 DS0 Channelization Capacity - 1 per DS1				UEPMG	VUM24	$112.51	$0.00	$0.00	$0.00	$0.00			$31.27				$3.92
RL			48 DS0 Channelization Capacity - (Utilize 1 per 2 DS1s)				UEPMG	VUM48	$225.02	$0.00	$0.00	$0.00	$0.00			$31.27				$3.92
RL			96 DS0 Channelization Capacity - (Utilize 1 per 4 DS1s)				UEPMG	VUM96	$450.04	$0.00	$0.00	$0.00	$0.00			$31.27				$3.92
RL			144 DS0 Channelization Capacity - (Utilize 1 per 6 DS1s)				UEPMG	VUM14	$675.06	$0.00	$0.00	$0.00	$0.00			$31.27				$3.92
RL			192 DS0 Channelization Capacity - (Utilize 1 per 8 DS1s)				UEPMG	VUM19	$900.08	$0.00	$0.00	$0.00	$0.00			$31.27				$3.92
RL			240 DS0 Channelization Capacity - (Utilized 1 per 10 DS1s)				UEPMG	VUM20	$1,125.10	$0.00	$0.00	$0.00	$0.00			$31.27				$3.92
RL			288 DS0 Channelization Capacity - (Utilized 1 per 12 DS1s)				UEPMG	VUM28	$1,350.12	$0.00	$0.00	$0.00	$0.00			$31.27				$3.92
RL			384 DS0 Channelization Capacity - (Utilized 1 per 16 DS1s)				UEPMG	VUM38	$1,800.16	$0.00	$0.00	$0.00	$0.00			$31.27				$3.92
RL			480 DS0 Channelization Capacity - (Utilized 1 per 20 DS1s)				UEPMG	VUM40	$2,250.20	$0.00	$0.00	$0.00	$0.00			$31.27				$3.92
RL			576 DS0 Channelization Capacity - (Utilized 1 per 24 DS1s)				UEPMG	VUM57	$2,700.24	$0.00	$0.00	$0.00	$0.00			$31.27				$3.92
RL			672 DS0 Channelization Capacity - (Utilized 1 per 28 DS1s)				UEPMG	VUM67	$3,150.28	$0.00	$0.00	$0.00	$0.00			$31.27				$3.92

* This element may be removed before the 4Q matrix is final

Exhibit 1
BellSouth/Access Integrated Rates
Unbundled Network Elements
Loop/Port Combinations
LOUISIANA

SME	Ref			Filt	Line	Zone	BCS	USOC	RATES						OSS RATES					
										Nonrecurring		Nonrecurring Disconnect			Svc Order Submitted Elec per LSR	Svc Order Submitted Manually per LSR	Incremental Charge - Manual Svc Order vs. Electronic-1st	Incremental Charge - Manual Svc Order vs. Electronic-Add'l	Incremental Charge - Manual Svc Order vs. Electronic-Disc 1st	Incremental Charge - Manual Svc Order vs. Electronic-Disc Add'l
									Recurring	First	Add'l	First	Add'l	Source	SOMEC	SOMAN	SOMAN	SOMAN	SOMAN	SOMAN
	LEGEND: CA-COMMISSION APPROVED; CE=COMMISSION EFFECTIVE; CF=COMPLIANCE FILED; CS=COST STUDY; F=FILED.																			
			Non-Recurring Charges (NRC) Associated with 4-Wire DS1 Loop with Channelization with Port -Charges Based on a System																	
			A System is defined as 1 DS1, 1 Channel Bank and up to 24 DS0s with Feature Activations																	
			NRC Conversion (Currently Combined) without Changes (Switch-as-Is)				UEPMG	USAC4	$0.00	$300.63	$16.70					$31.27				$3.92
			NRC Conversion (Currently Combined) with Allowec Changes				UEPMG	USAC4	$0.00	$300.63	$16.70					$31.27				$3.92
			Additional Service (Not Currently Combined) at a location with an existing DS1 Loop with Channelization with Port Combination																	
			Also New (Not Currently Combined In GA or by specific Contract																	
			NRC One (1) D4 Channel Bank and one(1) per new DS1 (add in NRC for each Port , Feature Activation, and Vertical Features Installed)				UEPMG	VUMD4	$0.00	$715.54	$467.54	$148.34	$17.63			$31.27				$3.92
			Bipolar 8 Zero Substitution (B8ZS)																	
			Clear channel capability, superframe -**Subsequent Activity only**				UEPMG	CCOSF	$0.00	$0.00	$605.00					$31.27				$3.92
			Clear channel capability, Extended superframe - **Subsequent Activity only**				UEPMG	CCOEF	$0.00	$0.00	$605.00					$31.27				$3.92
			Alternate Mark Inversion (AMI)																	
			Superframe format - **Subsequent Activity only**				UEPMG	MCOSF	$0.00	$0.00	$0.00					$31.27				$3.92
RL			Extended Superframe format -**Subsequent Activity Only**				UEPMG	MCOPO	$0.00	$0.00	$0.00									
			Exchange (DS0) Ports Associated with 4-Wire DS1 Loop with Channelization with Port																	
			Basic Class of Service -- UEPPX																	
RL			**Exchange Ports**																	
RL			Line Side Unbundled Combination 2-Way PBX Trunk Port - Business				UEPPX	UEPCX	$1.72	$0.00	$0.00	$4.47	$4.24			$31.27				$3.92
RL			Line Side Unbundled Outward PBX Trunk Port - Business				UEPPX	UEPOX	$1.72	$0.00	$0.00	$4.47	$4.24			$31.27				$3.92
RL			Line Side Unbundled Incoming PBX Trunk Port withou DID - Business				UEPPX	UEP1X	$1.72	$0.00	$0.00	$4.47	$4.24			$31.27				$3.92
RL			Trunk Side Unbundled PBX Trunk Port with DID - Business				UEPPX	UEPDM	$9.52	$0.00	$0.00	$60.03	$11.73			$31.27				$3.92
RL			**Feature Activations - Unbundled Loop Concentration**																	
			Feature (Service) Activation for Each Line Side Por Terminated in D4 Bank				UEPPX	1PQWM	$0.75	$25.36	$13.40					$31.27				$3.92
RL			Feature (Service) Activation for Each Trunk Side Por Terminated in D4 Bank				UEPPX	1PQWU	$0.75	$78.05	$18.40					$31.27				$3.92
RL			**Telephone Number/Trunk Group Establishment Charges For DID**																	
RL			DID Trunk Termination (One Per Port)				UEPPX	NDT	$0.00	$0.00	$0.00	$0.00	$0.00			$31.27				$3.92
RL			DID Numbers, Establish Trunk Group and Provide Firs Group of 20 DID Numbers (Valid in FL, NC,SC, & GA only)				UEPPX	NDZ	$0.00	$0.00	$0.00	$0.00	$0.00			$31.27				$3.92
RL			DID Numbers for each Group of 20 DID Numbers (VALID IN ALL STATES)				UEPPX	ND4	$0.00	$0.00	$0.00	$0.00	$0.00			$31.27				$3.92
RL			DID Numbers, Non- consecutive DID Numbers , Per Number				UEPPX	ND5	$0.00	$0.00	$0.00	$0.00	$0.00			$31.27				$3.92
			Reserving Non-consecutive DID numbers				UEPPX	ND6	$0.00	$0.00	$0.00	$0.00	$0.00			$31.27				$3.92
RL			Reserving DID numbers				UEPPX	NDV	$0.00	$0.00	$0.00	$0.00	$0.00			$31.27				$3.92

* This element may be removed before the 4Q matrix is final

Exhibit 1
BellSouth/Access Integrated
Rates
Unbundled Network Elements
Loop/Port Combinations
LOUISIANA

SME	Ref			Filt	Line	Zone	BCS	USOC	RATES						OSS RATES					
										Nonrecurring		Nonrecurring Disconnect			Svc Order Submitted Elec per LSR	Svc Order Submitted Manually per LSR	Incremental Charge - Manual Svc Order vs. Electronic-1st	Incremental Charge - Manual Svc Order vs. Electronic-Add'l	Incremental Charge - Manual Svc Order vs. Electronic-Disc 1st	Incremental Charge - Manual Svc Order vs. Electronic-Disc Add'l
									Recurring	First	Add'l	First	Add'l	Source	SOMEC	SOMAN	SOMAN	SOMAN	SOMAN	SOMAN
	LEGEND: CA-COMMISSION APPROVED; CE=COMMISSION EFFECTIVE; CF=COMPLIANCE FILED; CS=COST STUDY; F=FILED.																			
RL		LOCAL NUMBER PORTABILITY																		
RL			Local Number Portability (1 per port)				UEPPX	LNPCP	$3.15	$0.00	$0.00									
B.2		FEATURES - Vertical and Optional																		
RL		Local Switching Features offered with Line Side Ports																		
RL			All Features Offered				UEPPX	UEPVF	$3.08	$0.00	$0.00					$31.27				$3.92
		Note 1:																		
		No USOC exists for Port Loop Combinations - Use Individual Port USOC and Loop USOCs																		

* This element may be removed before the 4Q matrix is final

Exhibit 1
BellSouth/Access Integrated
Rates
Unbundled Network Elements
Loop/Port Combinations
MISSISSIPPI

SME	Ref	UNBUNDLED NETWORK ELEMENT	Filt	Line	Zone	BCS	USOC	RATES						OSS RATES					
									Nonrecurring		Nonrecurring			Svc Order Submitted Elec per LSR	Svc Order Submitted Manually per LSR	Incremental Charge - Manual Svc Order vs. Electronic-1st	Incremental Charge - Manual Svc Order vs. Electronic-Add'l	Incremental Charge - Manual Svc Order vs. Electronic-Disc 1st	Incremental Charge - Manual Svc Order vs. Electronic-Disc Add'l
								Recurring	First	Add'l	Disconnect First	Disconnect Add'l	Source	SOMEC	SOMAN	SOMAN	SOMAN	SOMAN	SOMAN
	LEGEND: CA-COMMISSION APPROVED; CE=COMMISSION EFFECTIVE; CF=COMPLIANCE FILED; CS=COST STUDY; F=FILED.																		
	Unbundled Port / Loop Combinations																		
		COST BASED RATES																	
RL		**4-Wire DS1 Loop with Channelization with Port (UNE PORT/LOOP Combination)**																	
RL		**1 DS1 Loop, 1 D4 Bank, and D4 Channel Bank Feature Activation**																	
RL		**BCS - UEPMG**																	
RL		**UNE Port/Loop Combination Rates**																	
RL		4-Wire DS1 Loop w/ Channelization w/ Port Statewide	x		sw	UEPMG	**Note 1**												
RL		4-Wire DS1 Loop w/ Channelization w/ Port - Zone 1			1	UEPMG	**Note 1**												
RL		4-Wire DS1 Loop w/ Channelization w/ Port - Zone 2			2	UEPMG	**Note 1**												
RL		4-Wire DS1 Loop w/ Channelization w/ Port - Zone 3			3	UEPMG	**Note 1**												
RL		4-Wire DS1 Loop w/ Channelization w/ Port - Zone 4	x		4	UEPMG	**Note 1**												
RL		**UNE DS1 Loop Rates**																	
RL		4-Wire DS1 Digital Loop - Statewide	x		sw	UEPMG	USLDC	$0.00											
RL		4-Wire DS1 Digital Loop - Zone 1			1	UEPMG	USLDC	$107.05							$31.26				$3.91
RL		4-Wire DS1 Digital Loop - Zone 2			2	UEPMG	USLDC	$212.71							$31.26				$3.91
RL		4-Wire DS1 Digital Loop - Zone 3			3	UEPMG	USLDC	$251.18							$31.26				$3.91
RL		4-Wire DS1 Digital Loop - Zone 4			4	UEPMG	USLDC	$566.44	$0.00	$0.00									
RL		**UNE DS0 Channelization Capacities (Channel Banks)**																	
RL		24 DS0 Channelization Capacity - 1 per DS1				UEPMG	VUM24	$115.78	$0.00	$0.00	$0.00	$0.00			$31.26				$3.91
RL		48 DS0 Channelization Capacity - (Utilize 1 per 2 DS1s)				UEPMG	VUM48	$231.56	$0.00	$0.00	$0.00	$0.00			$31.26				$3.91
RL		96 DS0 Channelization Capacity - (Utilize 1 per 4 DS1s)				UEPMG	VUM96	$463.12	$0.00	$0.00	$0.00	$0.00			$31.26				$3.91
RL		144 DS0 Channelization Capacity - (Utilize 1 per 6 DS1s)				UEPMG	VUM14	$694.68	$0.00	$0.00	$0.00	$0.00			$31.26				$3.91
RL		192 DS0 Channelization Capacity - (Utilize 1 per 8 DS1s)				UEPMG	VUM19	$926.24	$0.00	$0.00	$0.00	$0.00			$31.26				$3.91
RL		240 DS0 Channelization Capacity - (Utilized 1 per 10 DS1s)				UEPMG	VUM20	$1,157.80	$0.00	$0.00	$0.00	$0.00			$31.26				$3.91
RL		288 DS0 Channelization Capacity - (Utilized 1 per 12 DS1s)				UEPMG	VUM28	$1,389.36	$0.00	$0.00	$0.00	$0.00			$31.26				$3.91
RL		384 DS0 Channelization Capacity - (Utilized 1 per 16 DS1s)				UEPMG	VUM38	$1,852.48	$0.00	$0.00	$0.00	$0.00			$31.26				$3.91
RL		480 DS0 Channelization Capacity - (Utilized 1 per 20 DS1s)				UEPMG	VUM40	$2,315.60	$0.00	$0.00	$0.00	$0.00			$31.26				$3.91
RL		576 DS0 Channelization Capacity - (Utilized 1 per 24 DS1s)				UEPMG	VUM57	$2,778.72	$0.00	$0.00	$0.00	$0.00			$31.26				$3.91
RL		672 DS0 Channelization Capacity - (Utilized 1 per 28 DS1s)				UEPMG	VUM67	$3,241.84	$0.00	$0.00	$0.00	$0.00			$31.26				$3.91

* This element may be removed before the 4Q matrix is final

Exhibit 1
BellSouth/Access Integrated
Rates
Unbundled Network Elements
Loop/Port Combinations
MISSISSIPPI

SME	Ref	UNBUNDLED NETWORK ELEMENT	Filt	Line	Zone	BCS	USOC	RATES						OSS RATES					
									Nonrecurring		Nonrecurring			Svc Order Submitted Elec per LSR	Svc Order Submitted Manually per LSR	Incremental Charge - Manual Svc Order vs. Electronic-1st	Incremental Charge - Manual Svc Order vs. Electronic-Add'l	Incremental Charge - Manual Svc Order vs. Electronic-Disc 1st	Incremental Charge - Manual Svc Order vs. Electronic-Disc Add'l
								Recurring	First	Add'l	Disconnect First	Disconnect Add'l	Source	SOMEC	SOMAN	SOMAN	SOMAN	SOMAN	SOMAN
	LEGEND: CA-COMMISSION APPROVED; CE=COMMISSION EFFECTIVE; CF=COMPLIANCE FILED; CS=COST STUDY; F=FILED.																		
		Non-Recurring Charges (NRC) Associated with 4-Wire DS1 Loop with Channelization with Port -Charges Based on a System																	
		A System is defined as 1 DS1, 1 Channel Bank and up to 24 DS0s with Feature Activations																	
		NRC Conversion (Currently Combined) without Changes (Switch-as-Is)				UEPMG	USAC4	$0.00	$300.55	$16.70					$31.26				$3.91
		NRC Conversion (Currently Combined) with Allowec Changes				UEPMG	USAC4	$0.00	$300.55	$16.70					$31.26				$3.91
		Additional Service (Not Currently Combined) at a location with an existing DS1 Loop with Channelization with Port Combination																	
		Also New (Not Currently Combined In GA or by specific Contract																	
		NRC One (1) D4 Channel Bank and one(1) per new DS1 (add in NRC for each Port , Feature Activation, and Vertical Features Installed)				UEPMG	VUMD4	$0.00	$715.15	$327.39	$148.05	$17.56			$31.26				$3.91
		Bipolar 8 Zero Substitution (B8ZS)																	
		Clear channel capability, superframe -**Subsequent Activity only**				UEPMG	CCOSF	$0.00	$0.00	$600.00					$31.26				$3.91
		Clear channel capability, Extended superframe - **Subsequent Activity only**				UEPMG	CCOEF	$0.00	$0.00	$600.00					$31.26				$3.91
		Alternate Mark Inversion (AMI)																	
		Superframe format - **Subsequent Activity only**				UEPMG	MCOSF	$0.00	$0.00	$0.00					$31.26				$3.91
RL		Extended Superframe format -**Subsequent Activity Only**				UEPMG	MCOPO	$0.00	$0.00	$0.00									
		Exchange (DS0) Ports Associated with 4-Wire DS1 Loop with Channelization with Port																	
		Basic Class of Service -- UEPPX																	
RL		**Exchange Ports**																	
RL		Line Side Unbundled Combination 2-Way PBX Trunk Port - Business				UEPPX	UEPCX	$1.76	$0.00	$0.00	$4.29	$4.26			$31.26				$3.91
RL		Line Side Unbundled Outward PBX Trunk Port - Business				UEPPX	UEPOX	$1.76	$0.00	$0.00	$4.29	$4.26			$31.26				$3.91
RL		Line Side Unbundled Incoming PBX Trunk Port withou DID - Business				UEPPX	UEP1X	$1.76	$0.00	$0.00	$4.29	$4.26			$31.26				$3.91
RL		Trunk Side Unbundled PBX Trunk Port with DID - Business				UEPPX	UEPDM	$9.43	$0.00	$0.00	$60.66	$11.85			$31.26				$3.91
RL		**Feature Activations - Unbundled Loop Concentration**																	
		Feature (Service) Activation for Each Line Side Poi Terminated in D4 Bank				UEPPX	1PQWM	$0.70	$25.36	$13.39					$31.26				$3.91
RL		Feature (Service) Activation for Each Trunk Side Por Terminated in D4 Bank				UEPPX	1PQWU	$0.70	$78.03	$18.39					$31.26				$3.91
RL		**Telephone Number/Trunk Group Establishment Charges For DID**																	
RL		DID Trunk Termination (One Per Port)				UEPPX	NDT	$0.00	$0.00	$0.00	$0.00	$0.00			$31.26				$3.91
RL		DID Numbers, Establish Trunk Group and Provide Firs Group of 20 DID Numbers (Valid in FL, NC,SC, & GA only)				UEPPX	NDZ	$0.00	$0.00	$0.00	$0.00	$0.00			$31.26				$3.91
RL		DID Numbers for each Group of 20 DID Numbers (VALID IN ALL STATES)				UEPPX	ND4	$0.00	$0.00	$0.00	$0.00	$0.00			$31.26				$3.91
RL		DID Numbers, Non- consecutive DID Numbers , Per Number				UEPPX	ND5	$0.00	$0.00	$0.00	$0.00	$0.00			$31.26				$3.91
		Reserving Non-consecutive DID numbers				UEPPX	ND6	$0.00	$0.00	$0.00	$0.00	$0.00			$31.26				$3.91
RL		Reserving DID numbers				UEPPX	NDV	$0.00	$0.00	$0.00	$0.00	$0.00			$31.26				$3.91

* This element may be removed before the 4Q matrix is final

Exhibit 1
BellSouth/Access Integrated
Rates
Unbundled Network Elements
Loop/Port Combinations
MISSISSIPPI

SME	Ref		UNBUNDLED NETWORK ELEMENT	Filt	Line	Zone	BCS	USOC	RATES						OSS RATES					
										Nonrecurring		Nonrecurring Disconnect			Svc Order Submitted Elec per LSR	Svc Order Submitted Manually per LSR	Incremental Charge - Manual Svc Order vs. Electronic-1st	Incremental Charge - Manual Svc Order vs. Electronic-Add'l	Incremental Charge - Manual Svc Order vs. Electronic-Disc 1st	Incremental Charge - Manual Svc Order vs. Electronic-Disc Add'l
									Recurring	First	Add'l	First	Add'l	Source	SOMEC	SOMAN	SOMAN	SOMAN	SOMAN	SOMAN
	LEGEND: CA-COMMISSION APPROVED; CE=COMMISSION EFFECTIVE; CF=COMPLIANCE FILED; CS=COST STUDY; F=FILED.																			
RL		LOCAL NUMBER PORTABILITY																		
RL			Local Number Portability (1 per port)				UEPPX	LNPCP	$3.15	$0.00	$0.00									
B.2		FEATURES - Vertical and Optional																		
RL		Local Switching Features offered with Line Side Ports																		
RL			All Features Offered				UEPPX	UEPVF	$3.21	$0.00	$0.00					$31.26				$3.91
		Note 1:																		
		No USOC exists for Port Loop Combinations - Use Individual Port USOC and Loop USOCs																		

* This element may be removed before the 4Q matrix is final

Exhibit 1
BellSouth/Access Integrated
Rates
Unbundled Network Elements
Loop/Port Combinations
NORTH CAROLINA

SME	Ref	UNBUNDLED NETWORK ELEMENT	Filt	Line	Zone	BCS	USOC	RATES						OSS RATES					
									Nonrecurring		Nonrecurring Disconnect			Svc Order Submitted Elec per LSR	Svc Order Submitted Manually per LSR	Incremental Charge - Manual Svc Order vs. Electronic-1st	Incremental Charge - Manual Svc Order vs. Electronic-Add'l	Incremental Charge - Manual Svc Order vs. Electronic-Disc 1st	Incremental Charge - Manual Svc Order vs. Electronic-Disc Add'l
								Recurring	First	Add'l	First	Add'l	Source	SOMEC	SOMAN	SOMAN	SOMAN	SOMAN	SOMAN
	LEGEND: CA-COMMISSION APPROVED; CE=COMMISSION EFFECTIVE; CF=COMPLIANCE FILED; CS=COST STUDY; F=FILED.																		
	Unbundled Port / Loop Combinations																		
		COST BASED RATES																	
RL		**4-Wire DS1 Loop with Channelization with Port (UNE PORT/LOOP Combination)**																	
RL		**1 DS1 Loop, 1 D4 Bank, and D4 Channel Bank Feature Activation**																	
RL		**BCS - UEPMG**																	
RL		**UNE Port/Loop Combination Rates**																	
RL		4-Wire DS1 Loop w/ Channelization w/ Port Statewide	x		sw	UEPMG	**Note 1**												
RL		4-Wire DS1 Loop w/ Channelization w/ Port - Zone 1			1	UEPMG	**Note 1**												
RL		4-Wire DS1 Loop w/ Channelization w/ Port - Zone 2			2	UEPMG	**Note 1**												
RL		4-Wire DS1 Loop w/ Channelization w/ Port - Zone 3			3	UEPMG	**Note 1**												
RL		4-Wire DS1 Loop w/ Channelization w/ Port - Zone 4	x		4	UEPMG	**Note 1**												
RL		**UNE DS1 Loop Rates**																	
RL		4-Wire DS1 Digital Loop - Statewide	x		sw	UEPMG	USLDC	$62.71	$0.00	$0.00									
RL		4-Wire DS1 Digital Loop - Zone 1			1	UEPMG	USLDC								$22.00				
RL		4-Wire DS1 Digital Loop - Zone 2			2	UEPMG	USLDC								$22.00				
RL		4-Wire DS1 Digital Loop - Zone 3			3	UEPMG	USLDC								$22.00				
RL		4-Wire DS1 Digital Loop - Zone 4	x		4	UEPMG	USLDC	$0.00											
RL		**UNE DS0 Channelization Capacities (Channel Banks)**																	
RL		24 DS0 Channelization Capacity - 1 per DS1				UEPMG	VUM24	$123.06	$0.00	$0.00	$0.00	$0.00			$22.00				
RL		48 DS0 Channelization Capacity - (Utilize 1 per 2 DS1s)				UEPMG	VUM48	$246.12	$0.00	$0.00	$0.00	$0.00			$22.00				
RL		96 DS0 Channelization Capacity - (Utilize 1 per 4 DS1s)				UEPMG	VUM96	$492.24	$0.00	$0.00	$0.00	$0.00			$22.00				
RL		144 DS0 Channelization Capacity - (Utilize 1 per 6 DS1s)				UEPMG	VUM14	$738.36	$0.00	$0.00	$0.00	$0.00			$22.00				
RL		192 DS0 Channelization Capacity - (Utilize 1 per 8 DS1s)				UEPMG	VUM19	$984.48	$0.00	$0.00	$0.00	$0.00			$22.00				
RL		240 DS0 Channelization Capacity - (Utilized 1 per 10 DS1s)				UEPMG	VUM20	$1,230.60	$0.00	$0.00	$0.00	$0.00			$22.00				
RL		288 DS0 Channelization Capacity - (Utilized 1 per 12 DS1s)				UEPMG	VUM28	$1,476.72	$0.00	$0.00	$0.00	$0.00			$22.00				
RL		384 DS0 Channelization Capacity - (Utilized 1 per 16 DS1s)				UEPMG	VUM38	$1,968.96	$0.00	$0.00	$0.00	$0.00			$22.00				
RL		480 DS0 Channelization Capacity - (Utilized 1 per 20 DS1s)				UEPMG	VUM40	$2,461.20	$0.00	$0.00	$0.00	$0.00			$22.00				
RL		576 DS0 Channelization Capacity - (Utilized 1 per 24 DS1s)				UEPMG	VUM57	$2,953.44	$0.00	$0.00	$0.00	$0.00			$22.00				
RL		672 DS0 Channelization Capacity - (Utilized 1 per 28 DS1s)				UEPMG	VUM67	$3,445.68	$0.00	$0.00	$0.00	$0.00			$22.00				

* This element may be removed before the 4Q matrix is final

Exhibit 1
BellSouth/Access Integrated
Rates
Unbundled Network Elements
Loop/Port Combinations
NORTH CAROLINA

SME	Ref	UNBUNDLED NETWORK ELEMENT	Filt	Line	Zone	BCS	USOC	RATES						OSS RATES					
									Nonrecurring		Nonrecurring			Svc Order Submitted Elec per LSR	Svc Order Submitted Manually per LSR	Incremental Charge - Manual Svc Order vs. Electronic-1st	Incremental Charge - Manual Svc Order vs. Electronic-Add'l	Incremental Charge - Manual Svc Order vs. Electronic-Disc 1st	Incremental Charge - Manual Svc Order vs. Electronic-Disc Add'l
								Recurring	First	Add'l	Disconnect First	Disconnect Add'l	Source	SOMEC	SOMAN	SOMAN	SOMAN	SOMAN	SOMAN
	LEGEND: CA-COMMISSION APPROVED; CE=COMMISSION EFFECTIVE; CF=COMPLIANCE FILED; CS=COST STUDY; F=FILED.																		
		Non-Recurring Charges (NRC) Associated with 4-Wire DS1 Loop with Channelization with Port -Charges Based on a System																	
		A System is defined as 1 DS1, 1 Channel Bank and up to 24 DS0s with Feature Activations																	
		NRC Conversion (Currently Combined) without Changes (Switch-as-Is)				UEPMG	USAC4	$0.00	$330.61	$16.64					$22.00				
		NRC Conversion (Currently Combined) with Allowec Changes				UEPMG	USAC4	$0.00	33.0.61	$16.64					$22.00				
		Additional Service (Not Currently Combined) at a location with an existing DS1 Loop with Channelization with Port Combination																	
		Also New (Not Currently Combined In GA or by specific Contract																	
		NRC One (1) D4 Channel Bank and one(1) per new DS1 (add in NRC for each Port , Feature Activation, and Vertical Features Installed)				UEPMG	VUMD4	$0.00	$743.74	$326.22					$22.00				
		Bipolar 8 Zero Substitution (B8ZS)																	
		Clear channel capability, superframe -**Subsequent Activity only**				UEPMG	CCOSF	$0.00	$0.00	$615.00					$22.00				
		Clear channel capability, Extended superframe - **Subsequent Activity only**				UEPMG	CCOEF	$0.00	$0.00	$615.00					$22.00				
		Alternate Mark Inversion (AMI)																	
		Superframe format - **Subsequent Activity only**				UEPMG	MCOSF	$0.00	$0.00	$0.00					$22.00				
RL		Extended Superframe format -**Subsequent Activity Only**				UEPMG	MCOPO	$0.00	$0.00	$0.00									
		Exchange (DS0) Ports Associated with 4-Wire DS1 Loop with Channelization with Port																	
		Basic Class of Service -- UEPPX																	
RL		**Exchange Ports**																	
RL		Line Side Unbundled Combination 2-Way PBX Trunk Port - Business				UEPPX	UEPCX	$2.28	$0.00	$0.00	$4.15	$4.12			$22.00				
RL		Line Side Unbundled Outward PBX Trunk Port - Business				UEPPX	UEPOX	$2.28	$0.00	$0.00	$4.15	$4.12			$22.00				
RL		Line Side Unbundled Incoming PBX Trunk Port withou DID - Business				UEPPX	UEP1X	$2.28	$0.00	$0.00	$4.15	$4.12			$22.00				
RL		Trunk Side Unbundled PBX Trunk Port with DID - Business				UEPPX	UEPDM	$13.26	$0.00	$0.00	$58.74	$11.48			$22.00				
RL		**Feature Activations - Unbundled Loop Concentration**																	
		Feature (Service) Activation for Each Line Side Por Terminated in D4 Bank				UEPPX	1PQWM	$0.65	$25.27	$13.34					$22.00				
RL		Feature (Service) Activation for Each Trunk Side Por Terminated in D4 Bank				UEPPX	1PQWU	$0.65	$77.75	$18.33					$22.00				
															$22.00				
RL		**Telephone Number/Trunk Group Establishment Charges For DID**													$22.00				
RL		DID Trunk Termination (One Per Port)				UEPPX	NDT	$0.00	$0.00	$0.00	$0.00	$0.00			$22.00				
RL		DID Numbers, Establish Trunk Group and Provide Firs Group of 20 DID Numbers (Valid in FL, NC,SC, & GA only)				UEPPX	NDZ	$0.00	$0.00	$0.00	$0.00	$0.00			$22.00				
RL		DID Numbers for each Group of 20 DID Numbers (VALID IN ALL STATES)				UEPPX	ND4	$0.00	$0.00	$0.00	$0.00	$0.00			$22.00				
RL		DID Numbers, Non- consecutive DID Numbers , Per Number				UEPPX	ND5	$0.00	$0.00	$0.00	$0.00	$0.00			$22.00				
		Reserving Non-consecutive DID numbers				UEPPX	ND6	$0.00	$0.00	$0.00	$0.00	$0.00			$22.00				
RL		Reserving DID numbers				UEPPX	NDV	$0.00	$0.00	$0.00	$0.00	$0.00			$22.00				

* This element may be removed before the 4Q matrix is final

Exhibit 1
BellSouth/Access Integrated
Rates
Unbundled Network Elements
Loop/Port Combinations
NORTH CAROLINA

SME	Ref		UNBUNDLED NETWORK ELEMENT	Filt	Line	Zone	BCS	USOC	RATES						OSS RATES					
										Nonrecurring		Nonrecurring Disconnect			Svc Order Submitted Elec per LSR	Svc Order Submitted Manually per LSR	Incremental Charge - Manual Svc Order vs. Electronic-1st	Incremental Charge - Manual Svc Order vs. Electronic-Add'l	Incremental Charge - Manual Svc Order vs. Electronic-Disc 1st	Incremental Charge - Manual Svc Order vs. Electronic-Disc Add'l
									Recurring	First	Add'l	First	Add'l	Source	SOMEC	SOMAN	SOMAN	SOMAN	SOMAN	SOMAN
	LEGEND: CA-COMMISSION APPROVED; CE=COMMISSION EFFECTIVE; CF=COMPLIANCE FILED; CS=COST STUDY; F=FILED.																			
RL		LOCAL NUMBER PORTABILITY																		
RL			Local Number Portability (1 per port)				UEPPX	LNPCP	$3.15	$0.00	$0.00									
B.2		FEATURES - Vertical and Optional																		
RL		Local Switching Features offered with Line Side Ports																		
RL			All Features Offered				UEPPX	UEPVF	$3.04	$0.00	$0.00					$22.00				
		Note 1:																		
		No USOC exists for Port Loop Combinations - Use Individual Port USOC and Loop USOCs																		

* This element may be removed before the 4Q matrix is final

Exhibit 1
BellSouth/Access Integrated
Rates
Unbundled Network Elements
Loop/Port Combinations
SOUTH CAROLINA

SME	Ref	UNBUNDLED NETWORK ELEMENT	Filt	Line	Zone	BCS	USOC	RATES						OSS RATES					
									Nonrecurring		Nonrecurring			Svc Order Submitted Elec per LSR	Svc Order Submitted Manually per LSR	Incremental Charge - Manual Svc Order vs. Electronic-1st	Incremental Charge - Manual Svc Order vs. Electronic-Add'l	Incremental Charge - Manual Svc Order vs. Electronic-Disc 1st	Incremental Charge - Manual Svc Order vs. Electronic-Disc Add'l
								Recurring	First	Add'l	First	Add'l	Source	SOMEC	SOMAN	SOMAN	SOMAN	SOMAN	SOMAN
	LEGEND: CA-COMMISSION APPROVED; CE=COMMISSION EFFECTIVE; CF=COMPLIANCE FILED; CS=COST STUDY; F=FILED.																		
	Unbundled Port / Loop Combinations																		
		COST BASED RATES																	
RL		**4-Wire DS1 Loop with Channelization with Port (UNE PORT/LOOP Combination)**																	
RL		**1 DS1 Loop, 1 D4 Bank, and D4 Channel Bank Feature Activation**																	
RL		**BCS - UEPMG**																	
RL		**UNE Port/Loop Combination Rates**																	
RL		4-Wire DS1 Loop w/ Channelization w/ Port Statewide	x		sw	UEPMG	**Note 1**												
RL		4-Wire DS1 Loop w/ Channelization w/ Port - Zone 1			1	UEPMG	**Note 1**												
RL		4-Wire DS1 Loop w/ Channelization w/ Port - Zone 2			2	UEPMG	**Note 1**												
RL		4-Wire DS1 Loop w/ Channelization w/ Port - Zone 3			3	UEPMG	**Note 1**												
RL		4-Wire DS1 Loop w/ Channelization w/ Port - Zone 4	x		4	UEPMG	**Note 1**												
RL		**UNE DS1 Loop Rates**																	
RL		4-Wire DS1 Digital Loop - Statewide	x		sw	UEPMG	USLDC	$0.00											
RL		4-Wire DS1 Digital Loop - Zone 1			1	UEPMG	USLDC	$113.59							$31.38				$3.94
RL		4-Wire DS1 Digital Loop - Zone 2			2	UEPMG	USLDC	$194.29							$31.38				$3.94
RL		4-Wire DS1 Digital Loop - Zone 3			3	UEPMG	USLDC	$327.36							$31.38				$3.94
RL		4-Wire DS1 Digital Loop - Zone 4	x		4	UEPMG	USLDC	$0.00	$0.00	$0.00									
RL		**UNE DS0 Channelization Capacities (Channel Banks)**																	
RL		24 DS0 Channelization Capacity - 1 per DS1				UEPMG	VUM24	$103.47	$0.00	$0.00	$0.00	$0.00			$31.38				$3.94
RL		48 DS0 Channelization Capacity - (Utilize 1 per 2 DS1s)				UEPMG	VUM48	$206.94	$0.00	$0.00	$0.00	$0.00			$31.38				$3.94
RL		96 DS0 Channelization Capacity - (Utilize 1 per 4 DS1s)				UEPMG	VUM96	$413.88	$0.00	$0.00	$0.00	$0.00			$31.38				$3.94
RL		144 DS0 Channelization Capacity - (Utilize 1 per 6 DS1s)				UEPMG	VUM14	$620.82	$0.00	$0.00	$0.00	$0.00			$31.38				$3.94
RL		192 DS0 Channelization Capacity - (Utilize 1 per 8 DS1s)				UEPMG	VUM19	$827.76	$0.00	$0.00	$0.00	$0.00			$31.38				$3.94
RL		240 DS0 Channelization Capacity - (Utilized 1 per 10 DS1s)				UEPMG	VUM20	$1,034.70	$0.00	$0.00	$0.00	$0.00			$31.38				$3.94
RL		288 DS0 Channelization Capacity - (Utilized 1 per 12 DS1s)				UEPMG	VUM28	$1,241.64	$0.00	$0.00	$0.00	$0.00			$31.38				$3.94
RL		384 DS0 Channelization Capacity - (Utilized 1 per 16 DS1s)				UEPMG	VUM38	$1,655.52	$0.00	$0.00	$0.00	$0.00			$31.38				$3.94
RL		480 DS0 Channelization Capacity - (Utilized 1 per 20 DS1s)				UEPMG	VUM40	$2,069.40	$0.00	$0.00	$0.00	$0.00			$31.38				$3.94
RL		576 DS0 Channelization Capacity - (Utilized 1 per 24 DS1s)				UEPMG	VUM57	$2,483.28	$0.00	$0.00	$0.00	$0.00			$31.38				$3.94
RL		672 DS0 Channelization Capacity - (Utilized 1 per 28 DS1s)				UEPMG	VUM67	$2,897.16	$0.00	$0.00	$0.00	$0.00			$31.38				$3.94

* This element may be removed before the 4Q matrix is final

Exhibit 1
BellSouth/Access Integrated
Rates
Unbundled Network Elements
Loop/Port Combinations
SOUTH CAROLINA

SME	Ref	UNBUNDLED NETWORK ELEMENT	Filt	Line	Zone	BCS	USOC	RATES						OSS RATES					
									Nonrecurring		Nonrecurring Disconnect			Svc Order Submitted Elec per LSR	Svc Order Submitted Manually per LSR	Incremental Charge - Manual Svc Order vs. Electronic-1st	Incremental Charge - Manual Svc Order vs. Electronic-Add'l	Incremental Charge - Manual Svc Order vs. Electronic-Disc 1st	Incremental Charge - Manual Svc Order vs. Electronic-Disc Add'l
								Recurring	First	Add'l	First	Add'l	Source	SOMEC	SOMAN	SOMAN	SOMAN	SOMAN	SOMAN
	LEGEND: CA-COMMISSION APPROVED; CE=COMMISSION EFFECTIVE; CF=COMPLIANCE FILED; CS=COST STUDY; F=FILED.																		
		Non-Recurring Charges (NRC) Associated with 4-Wire DS1 Loop with Channelization with Port -Charges Based on a System																	
		A System is defined as 1 DS1, 1 Channel Bank and up to 24 DS0s with Feature Activations																	
		NRC Conversion (Currently Combined) without Changes (Switch-as-Is)				UEPMG	USAC4	$0.00	$301.62	$16.76					$31.38				$3.94
		NRC Conversion (Currently Combined) with Allowec Changes				UEPMG	USAC4	$0.00	$301.62	$16.76					$31.38				$3.94
		Additional Service (Not Currently Combined) at a location with an existing DS1 Loop with Channelization with Port Combination																	
		Also New (Not Currently Combined In GA or by specific Contract																	
		NRC One (1) D4 Channel Bank and one(1) per new DS1 (add in NRC for each Port , Feature Activation, and Vertical Features Installed)				UEPMG	VUMD4	$0.00	$717.71	$425.81	$149.08	$17.69			$31.38				$3.94
		Bipolar 8 Zero Substitution (B8ZS)																	
		Clear channel capability, superframe -**Subsequent Activity only**				UEPMG	CCOSF	$0.00	$0.00	$605.00					$31.38				$3.94
		Clear channel capability, Extended superframe - **Subsequent Activity only**				UEPMG	CCOEF	$0.00	$0.00	$605.00					$31.38				$3.94
		Alternate Mark Inversion (AMI)																	
		Superframe format - **Subsequent Activity only**				UEPMG	MCOSF	$0.00	$0.00	$0.00					$31.38				$3.94
RL		Extended Superframe format -**Subsequent Activity Only**				UEPMG	MCOPO	$0.00	$0.00	$0.00									
		Exchange (DS0) Ports Associated with 4-Wire DS1 Loop with Channelization with Port																	
		Basic Class of Service -- UEPPX																	
RL		**Exchange Ports**																	
RL		Line Side Unbundled Combination 2-Way PBX Trunk Port - Business				UEPPX	UEPCX	$1.65	$0.00	$0.00	$4.20	$4.17			$31.38				$3.94
RL		Line Side Unbundled Outward PBX Trunk Port - Business				UEPPX	UEPOX	$1.65	$0.00	$0.00	$4.20	$4.17			$31.38				$3.94
RL		Line Side Unbundled Incoming PBX Trunk Port withou DID - Business				UEPPX	UEP1X	$1.65	$0.00	$0.00	$4.20	$4.17			$31.38				$3.94
RL		Trunk Side Unbundled PBX Trunk Port with DID - Business				UEPPX	UEPDM	$8.86	$0.00	$0.00	$59.37	$11.60			$31.38				$3.94
RL		**Feature Activations - Unbundled Loop Concentration**																	
		Feature (Service) Activation for Each Line Side Poi Terminated in D4 Bank				UEPPX	1PQWM	$0.70	$25.45	$13.44					$31.38				$3.94
RL		Feature (Service) Activation for Each Trunk Side Por Terminated in D4 Bank				UEPPX	1PQWU	$0.70	$78.31	$18.46					$31.38				$3.94
RL		**Telephone Number/Trunk Group Establishment Charges For DID**																	
RL		DID Trunk Termination (One Per Port)				UEPPX	NDT	$0.00	$0.00	$0.00	$0.00	$0.00			$31.38				$3.94
RL		DID Numbers, Establish Trunk Group and Provide Firs Group of 20 DID Numbers (Valid in FL, NC,SC, & GA only)				UEPPX	NDZ	$0.00	$0.00	$0.00	$0.00	$0.00			$31.38				$3.94
RL		DID Numbers for each Group of 20 DID Numbers (VALID IN ALL STATES)				UEPPX	ND4	$0.00	$0.00	$0.00	$0.00	$0.00			$31.38				$3.94
RL		DID Numbers, Non- consecutive DID Numbers , Per Number				UEPPX	ND5	$0.00	$0.00	$0.00	$0.00	$0.00			$31.38				$3.94
		Reserving Non-consecutive DID numbers				UEPPX	ND6	$0.00	$0.00	$0.00	$0.00	$0.00			$31.38				$3.94
RL		Reserving DID numbers				UEPPX	NDV	$0.00	$0.00	$0.00	$0.00	$0.00			$31.38				$3.94

* This element may be removed before the 4Q matrix is final

Exhibit 1
BellSouth/Access Integrated
Rates
Unbundled Network Elements
Loop/Port Combinations
SOUTH CAROLINA

SME	Ref		UNBUNDLED NETWORK ELEMENT	Filt	Line	Zone	BCS	USOC	RATES						OSS RATES					
										Nonrecurring		Nonrecurring Disconnect			Svc Order Submitted Elec per LSR	Svc Order Submitted Manually per LSR	Incremental Charge - Manual Svc Order vs. Electronic-1st	Incremental Charge - Manual Svc Order vs. Electronic-Add'l	Incremental Charge - Manual Svc Order vs. Electronic-Disc 1st	Incremental Charge - Manual Svc Order vs. Electronic-Disc Add'l
									Recurring	First	Add'l	First	Add'l	Source	SOMEC	SOMAN	SOMAN	SOMAN	SOMAN	SOMAN
	LEGEND: CA-COMMISSION APPROVED; CE=COMMISSION EFFECTIVE; CF=COMPLIANCE FILED; CS=COST STUDY; F=FILED.																			
RL		LOCAL NUMBER PORTABILITY																		
RL			Local Number Portability (1 per port)				UEPPX	LNPCP	$3.15	$0.00	$0.00									
B.2		FEATURES - Vertical and Optional																		
RL		Local Switching Features offered with Line Side Ports																		
RL			All Features Offered				UEPPX	UEPVF	$3.04	$0.00	$0.00					$31.38				
		Note 1:																		
		No USOC exists for Port Loop Combinations - Use Individual Port USOC and Loop USOCs																		

* This element may be removed before the 4Q matrix is final

Exhibit 1
BellSouth/Access Integrated
Unbundled Network Elements
Loop/Port Combination
TENNESSEE

SME	Ref	UNBUNDLED NETWORK ELEMENT	Filt	Line	Zone	BCS	USOC	RATES						OSS RATES					
									Nonrecurring		Nonrecurring Disconnect			Svc Order Submitted Elec per LSR	Svc Order Submitted Manually per LSR	Incremental Charge - Manual Svc Order vs. Electronic-1st	Incremental Charge - Manual Svc Order vs. Electronic-Add'l	Incremental Charge - Manual Svc Order vs. Electronic-Disc 1st	Incremental Charge - Manual Svc Order vs. Electronic-Disc Add'l
								Recurring	First	Add'l	First	Add'l	Source	SOMEC	SOMAN	SOMAN	SOMAN	SOMAN	SOMAN
	LEGEND: CA-COMMISSION APPROVED; CE=COMMISSION EFFECTIVE; CF=COMPLIANCE FILED; CS=COST STUDY; F=FILED.																		
	Unbundled Port / Loop Combinations																		
		COST BASED RATES																	
RL		**4-Wire DS1 Loop with Channelization with Port (UNE PORT/LOOP Combination)**																	
RL		**1 DS1 Loop, 1 D4 Bank, and D4 Channel Bank Feature Activation**																	
RL		**BCS - UEPMG**																	
RL		**UNE Port/Loop Combination Rates**																	
RL		4-Wire DS1 Loop w/ Channelization w/ Port Statewide	x		sw	UEPMG	**Note 1**												
RL		4-Wire DS1 Loop w/ Channelization w/ Port - Zone 1			1	UEPMG	**Note 1**												
RL		4-Wire DS1 Loop w/ Channelization w/ Port - Zone 2			2	UEPMG	**Note 1**												
RL		4-Wire DS1 Loop w/ Channelization w/ Port - Zone 3			3	UEPMG	**Note 1**												
RL		4-Wire DS1 Loop w/ Channelization w/ Port - Zone 4	x		4	UEPMG	**Note 1**												
RL		**UNE DS1 Loop Rates**																	
RL		4-Wire DS1 Digital Loop - Statewide	x		sw	UEPMG	USLDC	$0.00											
RL		4-Wire DS1 Digital Loop - Zone 1			1	UEPMG	USLDC	$57.73							$0.00				
RL		4-Wire DS1 Digital Loop - Zone 2			2	UEPMG	USLDC	$75.40							$0.00				
RL		4-Wire DS1 Digital Loop - Zone 3			3	UEPMG	USLDC	$98.59							$0.00				
RL		4-Wire DS1 Digital Loop - Zone 4	x		4	UEPMG	USLDC	$0.00	$0.00	$0.00									
RL		**UNE DS0 Channelization Capacities (Channel Banks)**																	
RL		24 DS0 Channelization Capacity - 1 per DS1				UEPMG	VUM24	$131.87	$0.00	$0.00	$0.00	$0.00			$0.00				
RL		48 DS0 Channelization Capacity - (Utilize 1 per 2 DS1s)				UEPMG	VUM48	$263.74	$0.00	$0.00	$0.00	$0.00			$0.00				
RL		96 DS0 Channelization Capacity - (Utilize 1 per 4 DS1s)				UEPMG	VUM96	$527.48	$0.00	$0.00	$0.00	$0.00			$0.00				
RL		144 DS0 Channelization Capacity - (Utilize 1 per 6 DS1s)				UEPMG	VUM14	$791.22	$0.00	$0.00	$0.00	$0.00			$0.00				
RL		192 DS0 Channelization Capacity - (Utilize 1 per 8 DS1s)				UEPMG	VUM19	$827.76	$0.00	$0.00	$0.00	$0.00			$0.00				
RL		240 DS0 Channelization Capacity - (Utilized 1 per 10 DS1s)				UEPMG	VUM20	$1,318.70	$0.00	$0.00	$0.00	$0.00			$0.00				
RL		288 DS0 Channelization Capacity - (Utilized 1 per 12 DS1s)				UEPMG	VUM28	$1,582.44	$0.00	$0.00	$0.00	$0.00			$0.00				
RL		384 DS0 Channelization Capacity - (Utilized 1 per 16 DS1s)				UEPMG	VUM38	$2,109.92	$0.00	$0.00	$0.00	$0.00			$0.00				
RL		480 DS0 Channelization Capacity - (Utilized 1 per 20 DS1s)				UEPMG	VUM40	$2,637.40	$0.00	$0.00	$0.00	$0.00			$0.00				
RL		576 DS0 Channelization Capacity - (Utilized 1 per 24 DS1s)				UEPMG	VUM57	$3,164.88	$0.00	$0.00	$0.00	$0.00			$0.00				
RL		672 DS0 Channelization Capacity - (Utilized 1 per 28 DS1s)				UEPMG	VUM67	$3,692.36	$0.00	$0.00	$0.00	$0.00			$0.00				

* This element may be removed before the 4Q matrix is final

Exhibit 1
BellSouth/Access Integrated
Unbundled Network Elements
Loop/Port Combination
TENNESSEE

SME	Ref	UNBUNDLED NETWORK ELEMENT	Filt	Line	Zone	BCS	USOC	RATES						OSS RATES					
									Nonrecurring		Nonrecurring			Svc Order Submitted Elec per LSR	Svc Order Submitted Manually per LSR	Incremental Charge - Manual Svc Order vs. Electronic-1st	Incremental Charge - Manual Svc Order vs. Electronic-Add'l	Incremental Charge - Manual Svc Order vs. Electronic-Disc 1st	Incremental Charge - Manual Svc Order vs. Electronic-Disc Add'l
								Recurring	First	Add'l	Disconnect First	Disconnect Add'l	Source	SOMEC	SOMAN	SOMAN	SOMAN	SOMAN	SOMAN
	LEGEND: CA-COMMISSION APPROVED; CE=COMMISSION EFFECTIVE; CF=COMPLIANCE FILED; CS=COST STUDY; F=FILED.																		
		Non-Recurring Charges (NRC) Associated with 4-Wire DS1 Loop with Channelization with Port -Charges Based on a System																	
		A System is defined as 1 DS1, 1 Channel Bank and up to 24 DS0s with Feature Activations																	
		NRC Conversion (Currently Combined) without Changes (Switch-as-Is)				UEPMG	USAC4	$0.00	$303.61	$15.74					$0.00				
		NRC Conversion (Currently Combined) with Allowec Changes				UEPMG	USAC4	$0.00	$303.61	$15.74					$0.00				
		Additional Service (Not Currently Combined) at a location with an existing DS1 Loop with Channelization with Port Combination																	
		Also New (Not Currently Combined In GA or by specific Contract																	
		NRC One (1) D4 Channel Bank and one(1) per new DS1 (add in NRC for each Port , Feature Activation, and Vertical Features Installed)				UEPMG	VUMD4	$0.00	$704.68	$441.48	$138.36	$16.41			$0.00				
		Bipolar 8 Zero Substitution (B8ZS)																	
		Clear channel capability, superframe -**Subsequent Activity only**				UEPMG	CCOSF	$0.00	$0.00	$590.00					$0.00				
		Clear channel capability, Extended superframe - **Subsequent Activity only**				UEPMG	CCOEF	$0.00	$0.00	$590.00					$0.00				
		Alternate Mark Inversion (AMI)																	
		Superframe format - **Subsequent Activity only**				UEPMG	MCOSF	$0.00	$0.00	$0.00					$0.00				
RL		Extended Superframe format -**Subsequent Activity Only**				UEPMG	MCOPO	$0.00	$0.00	$0.00									
		Exchange (DS0) Ports Associated with 4-Wire DS1 Loop with Channelization with Port																	
		Basic Class of Service -- UEPPX																	
RL		**Exchange Ports**																	
RL		Line Side Unbundled Combination 2-Way PBX Trunk Port - Business				UEPPX	UEPCX	$1.79	$0.00	$0.00	$3.82	$3.80			$0.00				
RL		Line Side Unbundled Outward PBX Trunk Port - Business				UEPPX	UEPOX	$1.79	$0.00	$0.00	$3.82	$3.80			$0.00				
RL		Line Side Unbundled Incoming PBX Trunk Port withou DID - Business				UEPPX	UEP1X	$1.79	$0.00	$0.00	$3.82	$3.80			$0.00				
RL		Trunk Side Unbundled PBX Trunk Port with DID - Business				UEPPX	UEPDM	$8.97	$0.00	$0.00	$54.09	$10.57			$0.00				
RL		**Feature Activations - Unbundled Loop Concentration**																	
		Feature (Service) Activation for Each Line Side Por Terminated in D4 Bank				UEPPX	1PQWM	$0.66	$23.94	$12.64					$0.00				
RL		Feature (Service) Activation for Each Trunk Side Por Terminated in D4 Bank				UEPPX	1PQWU	$0.66	$73.67	$17.37					$0.00				
RL		**Telephone Number/Trunk Group Establishment Charges For DID**																	
RL		DID Trunk Termination (One Per Port)				UEPPX	NDT	$0.00	$0.00	$0.00	$0.00	$0.00			$0.00				
RL		DID Numbers, Establish Trunk Group and Provide Firs Group of 20 DID Numbers (Valid in FL, NC,SC, & GA only)				UEPPX	NDZ	$0.00	$0.00	$0.00	$0.00	$0.00			$0.00				
RL		DID Numbers for each Group of 20 DID Numbers (VALID IN ALL STATES)				UEPPX	ND4	$0.00	$0.00	$0.00	$0.00	$0.00			$0.00				
RL		DID Numbers, Non- consecutive DID Numbers , Per Number				UEPPX	ND5	$0.00	$0.00	$0.00	$0.00	$0.00			$0.00				
		Reserving Non-consecutive DID numbers				UEPPX	ND6	$0.00	$0.00	$0.00	$0.00	$0.00			$0.00				
RL		Reserving DID numbers				UEPPX	NDV	$0.00	$0.00	$0.00	$0.00	$0.00			$0.00				

* This element may be removed before the 4Q matrix is final

Exhibit 1
BellSouth/Access Integrated
Unbundled Network Elements
Loop/Port Combination
TENNESSEE

SME	Ref		UNBUNDLED NETWORK ELEMENT	Filt	Line	Zone	BCS	USOC	RATES						OSS RATES					
										Nonrecurring		Nonrecurring Disconnect			Svc Order Submitted Elec per LSR	Svc Order Submitted Manually per LSR	Incremental Charge - Manual Svc Order vs. Electronic-1st	Incremental Charge - Manual Svc Order vs. Electronic-Add'l	Incremental Charge - Manual Svc Order vs. Electronic-Disc 1st	Incremental Charge - Manual Svc Order vs. Electronic-Disc Add'l
									Recurring	First	Add'l	First	Add'l	Source	SOMEC	SOMAN	SOMAN	SOMAN	SOMAN	SOMAN
	LEGEND: CA-COMMISSION APPROVED; CE=COMMISSION EFFECTIVE; CF=COMPLIANCE FILED; CS=COST STUDY; F=FILED.																			
RL		LOCAL NUMBER PORTABILITY																		
RL			Local Number Portability (1 per port)				UEPPX	LNPCP	$3.15	$0.00	$0.00									
B.2		FEATURES - Vertical and Optional																		
RL		Local Switching Features offered with Line Side Ports																		
RL			All Features Offered				UEPPX	UEPVF	$0.00	$0.00	$0.00					$0.00				
		Note 1:																		
		No USOC exists for Port Loop Combinations - Use Individual Port USOC and Loop USOCs																		

* This element may be removed before the 4Q matrix is final

AMENDMENT
TO THE
INTERCONNECTION AGREEMENT BETWEEN
ACCESS INTEGRATED NETWORKS, INC.
AND
BELLSOUTH TELECOMMUNICATIONS, INC.
DATED FEBRUARY 17, 2000

Pursuant to this Amendment, (the "Amendment"), ACCESS Integrated Networks, Inc. ("ACCESS Integrated") and BellSouth Telecommunications, Inc. ("BellSouth") hereinafter referred to collectively as the "Parties," hereby amend that certain Interconnection Agreement between the Parties dated February 17, 2000 (the "Interconnection Agreement").

WHEREAS, the Parties entered into an Interconnection Agreement on February 17, 2000; and;

WHEREAS, the Parties desire to amend that Interconnection Agreement.

NOW THEREFORE, in consideration of the mutual provisions contained herein and other good and valuable consideration, the receipt and sufficiency of which are hereby acknowledged, the Parties hereby covenant and agree as follows:

1. Section 3.1.3 of Local Circuit Switching Capability, including Tandem Switching Capability in Attachment 2 of the Interconnection Agreement is hereby amended to incorporate terms and conditions for LATAwide Local Calling as follows:

3.1.3.1 Unbundled Local Switching, together with Common Transport and, if necessary, Tandem Switching, provides to ACCESS Integrated local subscribers local calling and the ability to presubscribe to a primary carrier for intraLATA toll service and a primary carrier for interLATA toll service.

3.1.3.2 Provided that ACCESS Integrated purchases unbundled local switching from BellSouth and uses the BellSouth CIC for its end users' LPIC or if a BellSouth local end user selects BellSouth as its LPIC, then the Parties will consider as local any calls originated by an ACCESS Integrated local end user, or originated by a BellSouth local end user and terminated to an ACCESS Integrated local end user, where such calls originate and terminate in the same LATA, except for those calls originated and terminated through switched access arrangements (i.e., calls that are transported by a party other than BellSouth). For such calls, BellSouth will charge ACCESS Integrated the UNE elements for the BellSouth facilities utilized. Neither Party shall bill the other originating or terminating switched access charges for such calls. Intercarrier compensation for local calls between BellSouth and ACCESS Integrated shall be as described in BellSouth's UNE Local Call Flows set forth on BellSouth's web site.

3.1.3.3 Where ACCESS Integrated purchases unbundled local switching from BellSouth but does not use the BellSouth CIC for its end users' LPIC, BellSouth will consider as local those direct dialed telephone calls that originate from an ACCESS Integrated end user and terminate within the basic local calling area or within the extended local calling areas and that are dialed using 7 or 10 digits as defined and specified in Section A3 of BellSouth's General Subscriber Services Tariffs. For such local calls, BellSouth will charge ACCESS Integrated the UNE elements for the BellSouth facilities utilized. Intercarrier compensation for local calls between BellSouth and ACCESS Integrated shall be as described in BellSouth's UNE Local Call Flows set forth on BellSouth's web site.

3.1.3.4 For any calls that originate and terminate through switched access arrangements (i.e., calls that are transported by a party other than BellSouth), BellSouth shall bill ACCESS Integrated the UNE elements for the BellSouth facilities utilized. Each Party may bill the toll provider originating or terminating switched access charges, as appropriate.

3.1.3.5 Reverse billed toll calls, such as intraLATA 800 calls, calling card calls and third party billed calls, where BellSouth is the carrier shall also be considered as local calls and ACCESS Integrated shall not bill BellSouth originating or terminating switched access for such calls.

3.1.3.6 BellSouth shall assess retroactive charges for UNE transport and switching associated with using the BellSouth LPIC if a CLEC has been able to previously select BellSouth as the end user LPIC prior to the option allowing the selection of a BellSouth provided LATA-wide local calling area being offered.

2. This Amendment shall be effective as of the date of the last signature of both Parties.

3. All of the other provisions of the Agreement, dated February 17, 2000 shall remain in full force and effect.

4. Either or both of the Parties shall submit this Amendment to the appropriate Commission for approval subject to Section 252(e) of the Federal Telecommunications Act of 1996.

IN WITNESS WHEREOF, the Parties hereto have caused this Amendment to the Interconnection Agreement to be executed by their respective duly authorized representatives on the date indicated below.

ACCESS Integrated Networks, Inc.	**BellSouth Telecommunications, Inc.**
By:_____	By: _____
Name: _____	Name:_____
Title: _____	Title:_____
Date:_____	Date:_____

AMENDMENT
TO THE
INTERCONNECTION AGREEMENT BETWEEN
ACCESS INTEGRATED NETWORKS, INC.
AND
BELLSOUTH TELECOMMUNICATIONS, INC.
DATED FEBRUARY 17, 2000

Pursuant to this Amendment, (the "Amendment"), ACCESS Integrated Networks, Inc. ("ACCESS Integrated") and BellSouth Telecommunications, Inc. ("BellSouth") hereinafter referred to collectively as the "Parties," hereby amend that certain Interconnection Agreement between the Parties dated February 17, 2000 (the "Interconnection Agreement").

WHEREAS, the Parties entered into an Interconnection Agreement on February 17, 2000; and;

WHEREAS, the Parties desire to amend that Interconnection Agreement.

NOW THEREFORE, in consideration of the mutual provisions contained herein and other good and valuable consideration, the receipt and sufficiency of which are hereby acknowledged, the Parties hereby covenant and agree as follows:

1. The Interconnection Agreement is hereby amended to add UNE Port rates to the Loop/Port Combination section of Attachment 2, Exhibit C, Rates attached hereto as Exhibit 1 and by reference made a part of this Amendment, for 2-Wire Voice Grade Loop, Business Only, With 2-Wire DID Trunk Port in the states of Alabama and South Carolina.

2. This Amendment shall be effective as of the date of the last signature of both Parties.

3. All of the other provisions of the Agreement, dated February 17, 2000 shall remain in full force and effect.

4. Either or both of the Parties shall submit this Amendment to the appropriate Commission for approval subject to Section 252(e) of the Federal Telecommunications Act of 1996.

IN WITNESS WHEREOF, the Parties hereto have caused this Amendment to the Interconnection Agreement to be executed by their respective duly authorized representatives on the date indicated below.

ACCESS Integrated Networks, Inc.	**BellSouth Telecommunications, Inc.**
By:_____	By: _____
Name: _____	Name:_____
Title: _____	Title:_____
Date:_____	Date:_____

BELLSOUTH / ACCESS INTEGRATED RATES
Unbundled Network Elements
ALABAMA

EXHIBIT 1

Attachment 2
Exhibit C
Rates - Page 1

							RATES						OSS RATES					
								Nonrecurring		Nonrecurring Disconnect			Svc Order Submitted Elec per LSR	Svc Order Submitted Manually per LSR	Incremental Charge - Manual Svc Order vs. Electronic-1st	Incremental Charge - Manual Svc Order vs. Electronic-Add'l	Incremental Charge - Manual Svc Order vs. Electronic-Disc 1st	Incremental Charge - Manual Svc Order vs. Electronic-Disc Add'l
CATEGORY	NOTES	UNBUNDLED NETWORK ELEMENT	Interim	Zone	BCS	USOC	Rec	First	Add'l	First	Add'l	SOMEC	SOMAN	SOMAN	SOMAN	SOMAN	SOMAN
	2-WIRE VOICE GRADE LOOP- BUS ONLY - WITH 2-WIRE DID TRUNK PORT																	
	UNE Port Rate																	
		Exchange Ports - 2-Wire DID Port			UEPPX	UEPD1	$9.17	$238.61	$37.48	$119.79	$7.52		$19.99					

							RATES					OSS RATES					
								Nonrecurring		Nonrecurring		Svc Order Submitted Elec per LSR	Svc Order Submitted Manually per LSR	Incremental Charge - Manual Svc Order vs. Electronic-1st	Incremental Charge - Manual Svc Order vs. Electronic-Add'l	Incremental Charge - Manual Svc Order vs. Electronic-Disc 1st	Incremental Charge - Manual Svc Order vs. Electronic-Disc Add'l
										Disconnect							
CATEGORY	NOTES	UNBUNDLED NETWORK ELEMENT	Interim	Zone	BCS	USOC	Rec	First	Add'l	First	Add'l	SOMEC	SOMAN	SOMAN	SOMAN	SOMAN	SOMAN
	2-WIRE VOICE GRADE LOOP- BUS ONLY - WITH 2-WIRE DID TRUNK PORT																
	UNE Port Rate																
		Exchange Ports - 2-Wire DID Port			UEPPX	UEPD1	$8.83	$239.14	$37.56	$120.05	$7.54		$19.99				

AMENDMENT
TO THE
INTERCONNECTION AGREEMENT BETWEEN
ACCESS INTEGRATED NETWORKS, INC.
AND
BELLSOUTH TELECOMMUNICATIONS, INC.
DATED FEBRUARY 17, 2000

Pursuant to this Amendment, (the "Amendment"), ACCESS Integrated Networks, Inc. ("ACCESS Integrated") and BellSouth Telecommunications, Inc. ("BellSouth") hereinafter referred to collectively as the "Parties," hereby amend that certain Interconnection Agreement between the Parties dated February 17, 2000 (the "Interconnection Agreement").

WHEREAS, the Parties entered into an Interconnection Agreement on February 17, 2000; and;

WHEREAS, the Parties desire to amend that Interconnection Agreement.

NOW THEREFORE, in consideration of the mutual provisions contained herein and other good and valuable consideration, the receipt and sufficiency of which are hereby acknowledged, the Parties hereby covenant and agree as follows:

1. The Interconnection Agreement is hereby amended to replace in their entirety, the Port and Loop/Port Combination sections of Attachment 2, Exhibit C, Rates attached hereto as Exhibit 1 and by reference made a part of this Amendment, to incorporate rates for Vertical Features.

2. This Amendment shall be effective as of the date of the last signature of both Parties.

3. All of the other provisions of the Agreement, dated February 17, 2000 shall remain in full force and effect.

4. Either or both of the Parties shall submit this Amendment to the appropriate Commission for approval subject to Section 252(e) of the Federal Telecommunications Act of 1996.

IN WITNESS WHEREOF, the Parties hereto have caused this Amendment to the Interconnection Agreement to be executed by their respective duly authorized representatives on the date indicated below.

ACCESS Integrated Networks, Inc.	**BellSouth Telecommunications, Inc.**
By:_____	By: _____
Name: _____	Name:_____
Title: _____	Title:_____
Date:_____	Date:_____

EXHIBIT 1

Attachment 2
Exhibit C
Rates - Page 1

BELLSOUTH/ACCESS INTEGRATED RATES
NETWORK ELEMENTS
AND OTHER SERVICES
PORTS

DESCRIPTION	USOC	AL	FL	GA	KY	LA	MS	NC	SC	TN
LOCAL EXCHANGE SWITCHING (PORTS)										
2-Wire Analog Line Port (Res., Bus.), per month										
2- wire voice unbundled port - residenc	UEPRL	$2.07	$2.00 - Note 1	$1.85 - Note 1	$2.61 - Note 1	$2.20	$2.11	$2.19	$2.35	$1.90 - Note 1
2-wire voice unbundled port with caller ID - residenc	UEPRC	$2.07	$2.00	$1.85	$2.61	$2.20	$2.11	$2.00	$2.35	$1.90
2-wire voice unbundled port outgoing only - residenc	UEPRO	$2.07	$2.00	$1.85	$2.61	$2.20	$2.11	$2.00	$2.35	$1.90
2-wire voice unbundled area plus port with caller ID - residenc	UEPRM	$2.07	$2.00	$1.85	$2.61	$2.20	$2.11	$2.00	$2.35	$1.90
2-wire voice unbundled Florida area calling with caller ID - residenc	UEPAF	NA	$2.00	NA	NA	NA	NA	NA	NA	NA
2-wire voice unbundled Louisiana Area Plus with caller ID - residence (RU	UEPAG	NA	NA	NA	NA	$2.20	NA	NA	NA	NA
2-wire voice unbundled Louisiana Area Plus with caller ID - residence (AC	UEPAH	NA	NA	NA	NA	$2.20	NA	NA	NA	NA
2-wire voice unbundled South Carolina Area Calling port with Caller ID residence (LW8)	UEPAJ	NA	NA	NA	NA	NA	NA	NA	$2.35	NA
2-wire voice unbundled Tennessee Area Calling port with Caller ID - residenc (F2R)	UEPAK	NA	NA	NA	NA	NA	NA	NA	NA	$1.90
2-wire voice unbundled Tennessee Area Calling port with Caller ID - residenc (TACER)	UEPAL	NA	NA	NA	NA	NA	NA	NA	NA	$1.90
2-wire voice unbundled Tennessee Area Calling port with Caller ID - residenc (TACSR)	UEPAM	NA	NA	NA	NA	NA	NA	NA	NA	$1.90
2-wire voice unbundled Tennessee Area Calling port with Caller ID - residenc (1MF2X)	UEPAN	NA	NA	NA	NA	NA	NA	NA	NA	$1.90
2-wire voice unbundled Tennessee Area Calling port with Caller ID - residenc (2MR)	UEPAO	NA	NA	NA	NA	NA	NA	NA	NA	$1.90
2-wire voice unbundled res, low usage line port with Caller ID (LUN	UEPAP	$2.07	$2.00	$1.85	$2.61	$2.20	$2.11	$2.00	$2.35	$1.90
LOCAL NUMBER PORTABILITY (REQUIRES ONE PER PORT	LNPCX									
2-wire voice unbundled port without Caller ID	UEPBL	$2.07	$2.00	$1.85	$2.61	$2.20	$2.11	$2.00	$2.35	$1.90
2-wire voice unbundled port with unbundled port with Caller+E484 I	UEPBC	$2.07	$2.00	$1.85	$2.61	$2.20	$2.11	$2.00	$2.35	$1.90
2-wire voice unbundled outgoing only por	UEPBO	$2.07	$2.00	$1.85	$2.61	$2.20	$2.11	$2.00	$2.35	$1.90
2-wire voice unbundled area plus port with Caller ID	UEPBM	$2.07	$2.00	$1.85	$2.61	$2.20	$2.11	$2.00	$2.35	$1.90
2-wire voice unbundled incoming only port with Caller ID	UEPB1	$2.07	$2.00	$1.85	$2.61	$2.20	$2.11	$2.00	$2.35	$1.90
2-wire voice unbundled LA Bus Area Calling Port with Caller ID (BUC	UEPAA	NA	NA	NA	NA	$2.20	NA	NA	NA	NA
2-wire voice unbundled SC Bus Area Calling Port with Caller ID (LME	UEPAB	NA	NA	NA	NA	NA	NA	NA	$2.35	NA
2-wire voice unbundled TN Bus 2-Way Area Calling Port Economy Optio (TACC1)	UEPAC	NA	NA	NA	NA	NA	NA	NA	NA	$1.90
2-wire voice unbundled TN Bus 2-Way Area Calling Port Standard Optio (TACC2)	UEPAD	NA	NA	NA	NA	NA	NA	NA	NA	$1.90
2-wire voice unbundled TN Bus 2-WAY Collierville and Memphis Local Callin Port (B2F)	UEPAE	NA	NA	NA	NA	NA	NA	NA	NA	$1.90
LOCAL NUMBER PORTABILITY (REQUIRES ONE PER PORT	LNPCX									
Non-Recurring Charges (NRC) - 1st (Residence										
2- wire voice unbundled port - residence	UEPRL	$21.93	$38.00	$17.16	$37.78	$16.43	$22.98	$21.60	$24.98	BST GSST A4.3.1
2-wire voice unbundled port with caller ID - residence	UEPRC	$21.93	$38.00	$17.16	$37.78	$16.43	$22.98	$24.04	$24.98	BST GSST A4.3.1
2-wire voice unbundled port outgoing only - residence	UEPRO	$21.93	$38.00	$17.16	$37.78	$16.43	$22.98	$24.04	$24.98	BST GSST A4.3.1
2-wire voice unbundled area plus port with caller ID - residence	UEPRM	$21.93	$38.00	$17.16	$37.78	$16.43	$22.98	$24.04	$24.98	BST GSST A4.3.1
2-wire voice unbundled Florida area calling with caller ID - residenc	UEPAF	NA	$38.00	NA	NA	NA	NA	NA	NA	NA
2-wire voice unbundled Louisiana Area Plus with caller ID - residence (RU	UEPAG	NA	NA	NA	NA	$16.43	NA	NA	NA	NA
2-wire voice unbundled Louisiana Area Plus with caller ID - residence (AC	UEPAH	NA	NA	NA	NA	$16.43	NA	NA	NA	NA
2-wire voice unbundled South Carolina Area Calling port with Caller ID residence (LW8)	UEPAJ	NA	NA	NA	NA	NA	NA	NA	$24.98	NA
2-wire voice unbundled Tennessee Area Calling port with Caller ID - residenc (F2R)	UEPAK	NA	NA	NA	NA	NA	NA	NA	NA	BST GSST A4.3.1
2-wire voice unbundled Tennessee Area Calling port with Caller ID - residenc (TACER)	UEPAL	NA	NA	NA	NA	NA	NA	NA	NA	BST GSST A4.3.1

BELLSOUTH/ACCESS INTEGRATED RATES
NETWORK ELEMENTS
AND OTHER SERVICES
PORTS

		2-wire voice unbundled Tennessee Area Calling port with Caller ID - residenc (TACSR)	UEPAM	NA	NA	NA	NA	NA	NA	NA	NA	BST GSST A4.3.1	
		2-wire voice unbundled Tennessee Area Calling port with Caller ID - residenc (1MF2X)	UEPAN	NA	NA	NA	NA	NA	NA	NA	NA	BST GSST A4.3.1	
		2-wire voice unbundled Tennessee Area Calling port with Caller ID - residenc (2MR)	UEPAO	NA	NA	NA	NA	NA	NA	NA	NA	BST GSST A4.3.1	
		2-wire voice unbundled Res Low Usage Line Port with Caller+E563 ID (LUM)	UEPAP	$21.93	$38.00	$17.16	$37.78	$16.43	$22.98	$24.04	$24.98	BST GSST A4.3.1	
		NRC - Add'l (Residence)											
		2- wire voice unbundled port - residence -	UEPRL	$21.93	$15.00	$17.16	$37.78	$16.43	$22.98	$21.60	$24.98	BST GSST A4.3.1	
		2-wire voice unbundled port with caller ID - residence	UEPRC	$21.93	$15.00	$17.16	$37.78	$16.43	$22.98	$9.08	$24.98	BST GSST A4.3.1	
		2-wire voice unbundled port outgoing only - residence	UEPRO	$21.93	$15.00	$17.16	$37.78	$16.43	$22.98	$9.08	$24.98	BST GSST A4.3.1	
		2-wire voice unbundled area plus port with caller ID - residence	UEPRM	$21.93	$15.00	$17.16	$37.78	$16.43	$22.98	$9.08	$24.98	BST GSST A4.3.1	
		2-wire voice unbundled Florida area calling with caller ID - residenc	UEPAF	NA	$15.00	NA	NA	NA	NA	NA	NA	NA	
		2-wire voice unbundled Louisiana Area Plus with caller ID - residence (RU	UEPAG	NA	NA	NA	NA	$16.43	NA	NA	NA	NA	
		2-wire voice unbundled Louisiana Area Plus with caller ID - residence (AC	UEPAH	NA	NA	NA	NA	$16.43	NA	NA	NA	NA	
		2-wire voice unbundled South Carolina Area Calling port with Caller ID residence (LW8)	UEPAJ	NA	NA	NA	NA	NA	NA	NA	$24.98	NA	
		2-wire voice unbundled Tennessee Area Calling port with Caller ID - residenc (F2R)	UEPAK	NA	NA	NA	NA	NA	NA	NA	NA	BST GSST A4.3.1	
		2-wire voice unbundled Tennessee Area Calling port with Caller ID - residenc (TACER)	UEPAL	NA	NA	NA	NA	NA	NA	NA	NA	BST GSST A4.3.1	
		2-wire voice unbundled Tennessee Area Calling port with Caller ID - residenc (TACSR)	UEPAM	NA	NA	NA	NA	NA	NA	NA	NA	BST GSST A4.3.1	
		2-wire voice unbundled Tennessee Area Calling port with Caller ID - residenc (1MF2X)	UEPAN	NA	NA	NA	NA	NA	NA	NA	NA	BST GSST A4.3.1	
		2-wire voice unbundled Tennessee Area Calling port with Caller ID - residenc (2MR)	UEPAO	NA	NA	NA	NA	NA	NA	NA	NA	BST GSST A4.3.1	
		2-wire voice unbundled Res Low Usage Line Port with Caller ID (LUM)	UEPAP	$21.93	$15.00	$17.16	$37.78	$16.43	$22.98	$9.08	$24.98	BST GSST A4.3.1	
		NRC - 1st (Business)											
		2-wire Voice Unbundled Port without Caller ID	UEPBL	$21.93	$38.00	$17.16	$37.55	$16.43	$22.98	$21.60	$24.98	BST GSST A4.3.1	
		2-wire voice unbundled port with Caller ID	UEPBC	$21.93	$38.00	$17.16	$37.55	$16.43	$22.98	$24.04	$24.98	BST GSST A4.3.1	
		2-wire voice unbundled outgoing only port	UEPBO	$21.93	$38.00	$17.16	$37.55	$16.43	$22.98	$24.04	$24.98	BST GSST A4.3.1	
		2-wire voice unbundled Area Plus Port with Caller ID	UEPBM	$21.93	$38.00	$17.16	$37.55	$16.43	$22.98	$24.04	$24.98	BST GSST A4.3.1	
		2-wire voice unbundled Incoming only Port with Caller ID	UEPB1	$21.93	$38.00	$17.16	$37.55	$16.43	$22.98	$24.04	$24.98	BST GSST A4.3.1	
		2-wire voice unbundled LA Bus Area Calling Port with Caller ID (BUC	UEPAA	NA	NA	NA	NA	$16.43	NA	NA	NA	NA	
		2-wire voice unbundled SC Bus Area Calling Port with Caller ID+E587 (LME	UEPAB	NA	NA	NA	NA	NA	NA	NA	$24.98	NA	
		2-wire voice unbundled TN Bus 2-way Area Calling Port Economy Optio (TACC1)	UEPAC	NA	NA	NA	NA	NA	NA	NA	NA	BST GSST A4.3.1	
		2-wire voice unbundled TN Bus 2-way Area Calling Port Standard Optio (TACC2)	UEPAD	NA	NA	NA	NA	NA	NA	NA	NA	BST GSST A4.3.1	
		2-wire voice unbundled TN Bus 2-way Collierville and Memphis Local Callin Port (B2F)	UEPAE	NA	NA	NA	NA	NA	NA	NA	NA	BST GSST A4.3.1	
												BST GSST A4.3.1	
		NRC - Add'l (Business)	UEPBL	$21.93	$15.00	$17.16	$37.55	$16.43	$22.98	$9.08	$24.98	BST GSST A4.3.1	
		2-wire voice unbundled port without Caller ID	UEPBL	$21.93	$15.00	$17.16	$37.55	$16.43	$22.98	$21.60	$24.98	BST GSST A4.3.1	

BELLSOUTH/ACCESS INTEGRATED RATES
NETWORK ELEMENTS
AND OTHER SERVICES
PORTS

2-wire voice unbundled port with Caller ID	UEPBC	$21.93	$15.00	$17.16	$37.55	$16.43	$22.98	$9.08	$24.98	BST GSST A4.3.1	
2-wire voice unbundled outgoing only port	UEPBO	$21.93	$15.00	$17.16	$37.55	$16.43	$22.98	$9.08	$24.98	BST GSST A4.3.1	
2-wire voice unbundled Area Plus Port with Caller ID	UEPBM	$21.93	$15.00	$17.16	$37.55	$16.43	$22.98	$9.08	$24.98	BST GSST A4.3.1	
2-wire voice unbundled incoming only port with Caller ID	UEPB1	$21.93	$15.00	$17.16	$37.55	$16.43	$22.98	$9.08	$24.98	BST GSST A4.3.1	
2-wire voice unbundled LA Bus Area Calling Port with Caller ID (BUC	UEPAA	NA	NA	NA	NA	$16.43	NA	NA	NA	NA	
2-wire voice unbundled SC Bus Area Calling Port with Caller ID (LME	UEPAB	NA	NA	NA	NA	NA	NA	NA	$24.98	NA	
2-wire voice unbundled TN Bus 2-way Area Calling Port Economy Optio (TACC1)	UEPAC	NA	NA	NA	NA	NA	NA	NA	NA	BST GSST A4.3.1	
2-wire voice unbundled TN Bus 2-way Area Calling Port Standard Optio (TACC2)	UEPAD	NA	NA	NA	NA	NA	NA	NA	NA	BST GSST A4.3.1	
2-wire voice unbundled TN Bus 2-way Collierville and Memphis Locall Callin Port (B2F)	UEPAE	NA	NA	NA	NA	NA	NA	NA	NA	BST GSST A4.3.1	
NRC - Disconnect Charge - 1s											
2- wire voice unbundled port - residenc		$6.21	NA	NA	NA	$4.38	$6.56	NA	NA	NA	
2-wire voice unbundled port with caller ID - residenc		$6.21	NA	NA	NA	$4.38	$6.56	NA	NA	NA	
2-wire voice unbundled port outgoing only - residenc		$6.21	NA	NA	NA	$4.38	$6.56	NA	NA	NA	
2-wire voice unbundled area plus port with caller ID - residenc		$6.21	NA	NA	NA	$4.38	$6.56	NA	NA	NA	
2-wire voice unbundled Florida area calling with caller ID - residenc		NA	NA	NA	NA	NA	NA	NA	NA	NA	
2-wire voice unbundled Louisiana Area Plus with caller ID - residence (RU		NA	NA	NA	NA	$4.38	NA	NA	NA	NA	
2-wire voice unbundled Louisiana Area Plus with caller ID - residence (AC		NA	NA	NA	NA	$4.38	NA	NA	NA	NA	
2-wire voice unbundled South Carolina Area Calling port with Caller ID residence (LW8)		NA	NA	NA	NA	NA	NA	NA	NA	NA	
2-wire voice unbundled Tennessee Area Calling port with Caller ID - residenc (F2R)		NA	NA	NA	NA	NA	NA	NA	NA	NA	
2-wire voice unbundled Tennessee Area Calling port with Caller ID - residenc (TACER)		NA	NA	NA	NA	NA	NA	NA	NA	NA	
2-wire voice unbundled Tennessee Area Calling port with Caller ID - residenc (TACSR)		NA	NA	NA	NA	NA	NA	NA	NA	NA	
2-wire voice unbundled Tennessee Area Calling port with Caller ID - residenc (1MF2X)		NA	NA	NA	NA	NA	NA	NA	NA	NA	
2-wire voice unbundled Tennessee Area Calling port with Caller ID - residenc (2MR)		NA	NA	NA	NA	NA	NA	NA	NA	NA	
2-wire voice unbundled Res Low Usage Line Port with Caller ID (LUN		$6.21	NA	NA	NA	$4.38	$6.56	NA	NA	NA	
2-wire voice unbundled port without Caller ID		$6.21	NA	NA	NA	$4.38	$6.56	NA	NA	NA	
2-wire voice unbundled port with Caller ID		$6.21	NA	NA	NA	$4.38	$6.56	NA	NA	NA	
2-wire voice unbundled outgoing only Port		$6.21	NA	NA	NA	$4.38	$6.56	NA	NA	NA	
2-wire voice unbundled Area Plus Port with Caller ID		$6.21	NA	NA	NA	$4.38	$6.56	NA	NA	NA	
2-wire voice unbundled Incoming only Port with Caller ID		$6.21	NA	NA	NA	$4.38	$6.56	NA	NA	NA	
2-wire voice unbundled LA Bus Area Calling Port with Caller ID (BUC		NA	NA	NA	NA	$4.38	NA	NA	NA	NA	
2-wire voice unbundles SC Bus Area Calling Port with Caller ID (LME		NA	NA	NA	NA	NA	NA	NA	NA	NA	
2-wire voice unbundled TN Bus 2-way Area Calling Port Economy Optio (TACC1)		NA	NA	NA	NA	NA	NA	NA	NA	NA	
2-wire voice unbundled TN Bus 2-way Area Calling Port Standard Optio (TACC2)		NA	NA	NA	NA	NA	NA	NA	NA	NA	
2-wire voice unbundled TN Bus 2-Way Collierville and Memphis Local Callin Port (B2F)		NA	NA	NA	NA	NA	NA	NA	NA	NA	
NRC - Disconnect Charge - Add'											
2- wire voice unbundled port - residenc		$6.21	NA	NA	NA	$4.38	$6.56	NA	NA	NA	
2-wire voice unbundled port with caller ID - residenc		$6.21	NA	NA	NA	$4.38	$6.56	NA	NA	NA	
2-wire voice unbundled port outgoing only - residenc		$6.21	NA	NA	NA	$4.38	$6.56	NA	NA	NA	
2-wire voice unbundled area plus port with caller ID - residenc		$6.21	NA	NA	NA	$4.38	$6.56	NA	NA	NA	
2-wire voice unbundled Florida area calling with caller ID - residenc		NA	NA	NA	NA	NA	NA	NA	NA	NA	
2-wire voice unbundled Louisiana Area Plus with caller ID - residence (RU		NA	NA	NA	NA	$4.38	NA	NA	NA	NA	
2-wire voice unbundled Louisiana Area Plus with caller ID - residence (AC		NA	NA	NA	NA	$4.38	NA	NA	NA	NA	

BELLSOUTH/ACCESS INTEGRATED RATES
NETWORK ELEMENTS
AND OTHER SERVICES
PORTS

		2-wire voice unbundled South Carolina Area Calling port with Caller ID residence (LW8)		NA	NA	NA	NA	NA	NA	NA	NA	NA
		2-wire voice unbundled Tennessee Area Calling port with Caller ID - residenc (F2R)		NA	NA	NA	NA	NA	NA	NA	NA	NA
		2-wire voice unbundled Tennessee Area Calling port with Caller ID - residenc (TACER)		NA	NA	NA	NA	NA	NA	NA	NA	NA
		2-wire voice unbundled Tennessee Area Calling port with Caller ID - residenc (TACSR)		NA	NA	NA	NA	NA	NA	NA	NA	NA
		2-wire voice unbundled Tennessee Area Calling port with Caller ID - residenc (1MF2X)		NA	NA	NA	NA	NA	NA	NA	NA	NA
		2-wire voice unbundled Tennessee Area Calling port with Caller ID - residenc (2MR)		NA	NA	NA	NA	$4.38	$6.56	NA	NA	NA
		2-wire voice unbundled Res Low Usage Line Port with Caller ID (LUN		$6.21	NA	NA	NA	$4.38	$6.56	NA	NA	NA
		2-wire voice unbundled port without Caller ID		$6.21	NA	NA	NA	$4.38	$6.56	NA	NA	NA
		2-wire voice unbundled port with Caler ID		$6.21	NA	NA	NA	$4.38	$6.56	NA	NA	NA
		2-wire voice unbundled outgoing only port		$6.21	NA	NA	NA	$4.38	$6.56	NA	NA	NA
		2-wire voice unbundled Area Plus Port with Caller ID		$6.21	NA	NA	NA	$4.38	$6.56	NA	NA	NA
		2-wire voice unbundled incoming only port with Caller ID		$6.21	NA	NA	NA	$4.38	$6.56	NA	NA	NA
		2-wire voice unbundled LA Bus Area Calling Port with Caller ID (BUC		NA	NA	NA	NA	$4.38	NA	NA	NA	NA
		2-wire voice unbundled SC Bus Area Calling Port with Caller ID (LME		NA	NA	NA	NA	NA	NA	NA	NA	NA
		2-wire voice unbundled TN Bus 2-way Area Calling Port Economy Option (TACC1)		NA	NA	NA	NA	NA	NA	NA	NA	NA
		2-wire voice unbundled TN Bus 2-way Area Calling Port Standard Option (TACC2)		NA	NA	NA	NA	NA	NA	NA	NA	NA
		2-wire voice unbundled TN Bus 2-way Collierville and Memphis Local Callin Port (B2F)		NA	NA	NA	NA	NA	NA	NA	NA	NA
		NRC - Incremental Charge - Manual Service Order - 1s	SOMAN	$27.37	NA	$18.94	NA	$18.14	$25.52	$26.94	$44.42	NA
		NRC - Incremental Charge - Manual Service Order - Add	SOMAN	$12.97	NA	$8.42	NA	$8.06	$11.34	$12.76	$14.63	NA
		NRC - Incremental Charge - Manual Service Order - Disconnect - 1s	SOMAN	$17.77	NA	NA	NA	$10.39	$16.06	NA	NA	NA
		NRC - Incremental Charge - Manual Service Order - Disconnect - Add	SOMAN	$1.44	NA	NA	NA	NA	NA	NA	NA	NA
All available features, per month			UEPVF	$2.64	$3.40	$0.00	$3.39	$3.08	$3.21	$3.04	$3.04	$0.00
		NRC - OSS LSR Charge, Electronic, per LSR received from the CLEC by one o the OSS interactive interfaces	SOMEC	$3.50	$3.50	$3.50	$3.50	$3.50	$3.50	$3.50	$3.50	$3.50
		NRC - Incremental Charge - Manual Service Order - 1s	SOMAN	$27.37	$19.99	$19.99	$19.99	$18.14	$25.52	$26.94	$44.42	$20.35
		NRC - Incremental Charge - Manual Service Order - Add	SOMAN	$12.97	NA	NA	NA	$8.06	$11.34	$12.76	$14.63	$10.54
		NRC - Incremental Charge - Manual Service Order - Disconnect - 1s	SOMAN	$17.77	NA	NA	NA	$10.39	$16.06	NA	NA	$13.32
		NRC - Incremental Charge - Manual Service Order - Disconnect - Add	SOMAN	$1.44	NA	NA	NA	NA	NA	NA	NA	$1.40
4-Wire Analog VG Port, per month			UEP4A	NA	$9.14	$8.47	NA	$10.13	$9.60	$8.69	$2.28	NA
		NRC - 1st	UEP4A	NA	$5.86	$17.16	NA	$16.43	$22.98	$21.69	$3.50	NA
		NRC - Add'l	UEP4A	NA	$5.86	$17.16	NA	$16.43	$22.98	$21.69	$3.50	NA
		NRC - Disconnect Charge - 1s	BFR	NA	NA	NA	NA	$3.77	$6.56	NA	NA	NA
		NRC - Disconnect Charge - Add'	BFR	NA	NA	NA	NA	$3.77	$6.56	NA	NA	NA
		NRC - Incremental Charge - Manual Service Order - 1s	SOMAN	NA	NA	$18.94	NA	$18.14	$25.52	$26.85	NA	NA
		NRC - Incremental Charge - Manual Service Order - Add	SOMAN	NA	NA	$8.42	NA	$8.06	$11.34	$12.67	NA	NA
		NRC - Incremental Charge - Manual Service Order - Disconnect - 1s	SOMAN	NA	NA	NA	NA	$8.94	$16.06	NA	NA	NA
2-Wire DID Port, per month			UEPP2	$12.08	TBD	$11.35	NA	$13.12	$14.63	$12.36	$12.08	$12.68
		NRC - 1st	UEPP2	$50.00	TBD	$61.91	NA	$59.28	$83.09	$81.84	$50.00	BST GSST A4.3.1
		NRC - Add'l	UEPP2	$18.00	TBD	$61.91	NA	$59.28	$83.09	$81.84	$50.00	BST GSST A4.3.1
		NRC - Disconnect Charge - 1s	UEPP2	NA	NA	NA	NA	$9.20	$13.48	NA	NA	NA
		NRC - Disconnect Charge - Add'	UEPP2	NA	NA	NA	NA	$9.20	$13.48	NA	NA	NA
		NRC - Incremental Charge - Manual Service Order - 1s	SOMAN	NA	NA	$18.94	NA	$18.14	$25.52	$26.94	NA	NA
		NRC - Incremental Charge - Manual Service Order - Add	SOMAN	NA	NA	$8.42	NA	$8.06	$11.34	$12.76	NA	NA
		NRC - Incremental Charge - Manual Service Order - Disconnect - 1s	SOMAN	NA	NA	NA	NA	$10.39	$16.07	NA	NA	NA
4-Wire DS1 Port w/DID capability, per month			UEPDD	$130.23	$125.00	$120.80	NA	$149.27	$146.46	$123.65	$130.23	$120.00

BELLSOUTH/ACCESS INTEGRATED RATES
NETWORK ELEMENTS
AND OTHER SERVICES
PORTS

		NRC - 1st	UEPDD	$50.00	$112.00	$89.44	NA	$85.63	$117.81	$116.59	$60.00	To be negotiated	
		NRC - Add'l	UEPDD	$18.00	$91.00	$52.46	NA	$50.23	$71.18	$69.92	$60.00	To be negotiated	
		NRC - Disconnect Charge - 1s	UEPDD	NA	NA	NA	NA	$8.82	$12.94	NA	NA	NA	
		NRC - Disconnect Charge - Add'	UEPDD	NA	NA	NA	NA	$8.82	$12.94	NA	NA	NA	
		NRC - Incremental Charge - Manual Service Order - 1s	SOMAN	NA	NA	$18.94	NA	$18.14	$25.52	$26.94	NA	NA	
		NRC - Incremental Charge - Manual Service Order - Add	SOMAN	NA	NA	$8.42	NA	$8.06	$11.34	$12.76	NA	NA	
		NRC - Incremental Charge - Manual Service Order - Disconnect - 1s	SOMAN	NA	NA	NA	NA	$10.39	$16.06	NA	NA	NA	
2-Wire ISDN Port(2) (3), per month			U1PMA	$16.42	$13.00	$13.47	$12.33	$23.33	$51.91	$24.50	$33.74	$1.90	
		NRC - 1st	U1PMA	$63.24	$88.00	$47.37	$90.48	$45.35	$63.59	$62.29	$65.79	BST GSST A4.3.1	
		NRC - Add'l	U1PMA	$63.24	$66.00	$47.37	$84.53	$45.35	$63.59	$62.29	$65.79	BST GSST A4.3.1	
		NRC - Disconnect Charge - 1s	U1PMA	$5.69	NA	NA	NA	$4.31	$7.04	NA	NA	NA	
		NRC - Disconnect Charge - Add'	U1PMA	$5.69	NA	NA	NA	$4.31	$7.04	NA	NA	NA	
		NRC - Incremental Charge - Manual Service Order - 1s	SOMAN	$56.19	NA	$39.98	NA	$38.29	$53.87	$55.30	$67.52	NA	
		NRC - Incremental Charge - Manual Service Order - Add	SOMAN	$56.19	NA	$39.98	NA	$38.29	$53.87	$55.30	$67.52	NA	
		NRC - Incremental Charge - Manual Service Order - Disconnect - 1s	SOMAN	$12.97	NA	NA	NA	$6.65	$11.34	NA	NA	NA	
		NRC - Incremental Charge - Manual Service Order - Disconnect - Add	SOMAN	$12.97	NA	NA	NA	$6.65	$11.34	NA	NA	NA	
		NRC - User Profile per B Channel**(4)**	U1UMA	NA	NA	NA	$5.61	NA	NA	NA	NA	NA	
	All available features, per month		UEPVF	$2.64	$3.40	$0.00	$3.39	$3.08	$3.21	$3.04	$3.04	$0.00	
		NRC - OSS LSR Charge, Electronic, per LSR received from the CLEC by one of the OSS interactive interfaces	SOMEC	$3.50	$3.50	$3.50	$3.50	$3.50	$3.50	$3.50	$3.50	$3.50	
		NRC - Incremental Charge - Manual Service Order - 1s	SOMAN	$56.19	$21.56	$39.98	$19.99	$38.29	$53.87	$55.30	$67.52	$19.99	
		NRC - Incremental Charge - Manual Service Order - Add	SOMAN	$56.19	$21.56	$39.98	NA	$38.29	$53.87	$55.30	$67.52	NA	
		NRC - Incremental Charge - Manual Service Order - Disconnect - 1s	SOMAN	$12.97	$3.84	NA	NA	$6.65	$11.34	NA	NA	NA	
		NRC - Incremental Charge - Manual Service Order - Disconnect - Add	SOMAN	$12.97	$3.84	NA	NA	$6.65	$11.34	NA	NA	NA	
4-Wire ISDN DS1 Port, per month			UEPEX	$186.02	NA	$163.16	NA	$194.72	$213.21	$179.75	$214.79	$308.00	
		NRC - 1st	UEPEX	$244.85	NA	$186.80	NA	$181.89	$244.12	$241.63	$278.37	To be negotiated	
		NRC - Add'l	UEPEX	$244.85	NA	$186.80	NA	$181.89	$244.12	$241.63	$278.37	To be negotiated	
		NRC - Disconnect Charge - 1s	UEPEX	$51.19	NA	NA	NA	$27.11	$53.32	NA	NA	NA	
		NRC - Disconnect Charge - Add'	UEPEX	$51.19	NA	NA	NA	$27.11	$53.32	NA	NA	NA	
		NRC - Incremental Charge - Manual Service Order - 1s	SOMAN	$54.75	NA	$37.88	NA	$33.18	$51.03	$53.89	$65.48	NA	
		NRC - Incremental Charge - Manual Service Order - Add	SOMAN	$54.75	NA	$37.88	NA	$33.18	$51.03	$53.89	$65.48	NA	
		NRC - Incremental Charge - Manual Service Order - Disconnect - 1s	SOMAN	$11.53	NA	NA	NA	$7.73	$8.51	NA	NA	NA	
		NRC - Incremental Charge - Manual Service Order - Disconnect - Add	SOMAN	$11.53	NA	NA	NA	$7.73	$8.51	NA	NA	NA	
4-Wire ISDN DS1 Port including all available features, per month			UEPEX	NA	NA	NA	$275.48	NA	NA	NA	$251.00	NA	
		NRC - 1st	UEPEX	NA	NA	NA	$181.27	NA	NA	NA	$311.73	NA	
		NRC - Add'l	UEPEX	NA	NA	NA	$116.42	NA	NA	NA	$311.73	NA	
		NRC - Incremental Charge - Manual Service Order - 1s	SOMAN	NA	NA	NA	NA	NA	NA	NA	$65.48	NA	
		NRC - Incremental Charge - Manual Service Order - Add	SOMAN	NA	NA	NA	NA	NA	NA	NA	$65.48	NA	
2-Wire Analog Line Port (PBX), per month													
		2 WIRE VOICE UNBUNDLED COMBINATION 2-WAY PBX TRUNK - Residenc	UEPRD	$2.07	$2.00	$1.85	$2.61	$2.20	$2.11	$2.18	$2.35	$1.90	
		LINE SIDE UNBUNDLED COMBINATION 2-WAY PBX TRUNK - BUSINESS	UEPPC	$2.07	$2.00	$1.85	$2.61	$2.20	$2.11	$2.00	$2.35	$1.90	
		LINE SIDE UNBUNDLED OUTWARD PBX TRUNK - BUSINESS	UEPPO	$2.07	$2.00	$1.85	$2.61	$2.20	$2.11	$2.00	$2.35	$1.90	
		LINE SIDE UNBUNDLED INCOMING PBX TRUNK - BUSINESS	UEPP1	$2.07	$2.00	$1.85	$2.61	$2.20	$2.11	$2.00	$2.35	$1.90	
		LONG DISTANCE TERMINAL PBX TRUNK-BUSINESS	UEPLD	$2.07	$2.00	$1.85	$2.61	$2.20	$2.11	$2.00	$2.35	$1.90	
		TN 2-WAY CALLING PLAN PBX TRUNK - BUSINESS	UEPT2	$2.07	$2.00	$1.85	$2.61	$2.20	$2.11	$2.00	$2.35	$1.90	
		TN OUTWARD CALLING PLAN PBX TRUNK - BUSINESS	UEPTO	$2.07	$2.00	$1.85	$2.61	$2.20	$2.11	$2.00	$2.35	$1.90	
		2-WIRE VOICE UNBUNDLED 2-WAY COMBINATION PBX ALABAMA CALLING PORT	UEPA2	$2.07	NA	NA	NA	NA	NA	NA	NA	NA	
		2-WIRE VOICE UNBUNDLED 2-WAY COMBINATION PBX LOUISIANA CALLING PORT	UEPL2	NA	NA	NA	NA	$2.20	NA	NA	NA	NA	
		2-WIRE VOICE UNBUNDLED PBX LD TERMINAL PORTS	UEPLD	$2.07	$2.00	$1.85	$2.61	$2.20	$2.11	$2.00	$2.35	$1.90	
		2-WIRE VOICE UNBUNDLED 2-WAY COMBINATION PBX TENNESSEE CALLING PORT	UEPT2	NA	NA	NA	NA	NA	NA	NA	NA	$1.90	

BELLSOUTH/ACCESS INTEGRATED RATES
NETWORK ELEMENTS
AND OTHER SERVICES
PORTS

		2-WIRE VOICE UNBUNDLED 1-WAY OUTGOING PBX TENNESSEE CALLING PORT	UEPTO	NA	NA	NA	NA	NA	NA	NA	NA	$1.90	
		2-WIRE VOICE UNBUNDLED 2-WAY COMBINATION PBX USAGE POR	UEPXA	$2.07	$2.00	$1.85	$2.61	$2.20	$2.11	$2.00	$2.35	$1.90	
		2-WIRE VOICE UNBUNDLED PBX TOLL TERMINAL HOTEL PORTS	UEPXB	$2.07	$2.00	$1.85	$2.61	$2.20	$2.11	$2.00	$2.35	$1.90	
		2-WIRE VOICE UNBUNDLED PBX LD DDD TERMINALS POR	UEPXC	$2.07	$2.00	$1.85	$2.61	$2.20	$2.11	$2.00	$2.35	$1.90	
		2-WIRE VOICE UNBUNDLED PBX LD TERMINAL SWITCHBOARD POR	UEPXD	$2.07	$2.00	$1.85	$2.61	$2.20	$2.11	$2.00	$2.35	$1.90	
		2-WIRE VOICE UNBUNDLED PBX LD TERMINAL SWITCHBOARD IDE CAPABLE PORT	UEPXE	$2.07	$2.00	$1.85	$2.61	$2.20	$2.11	$2.00	$2.35	$1.90	
		2-WIRE VOICE UNBUNDLED 2-WAY PBX KENTUCKY ROOM AREA CALLING PORT WITHOUT LUD	UEPXF	NA	NA	NA	$2.61	NA	NA	NA	NA	NA	
		2-WIRE VOICE UNBUNDLED PBX KENTUCKY LUD AREA CALLING POR	UEPXG	NA	NA	NA	$2.61	NA	NA	NA	NA	NA	
		2-WIRE VOICE UNBUNDLED PBX KENTUCKY PREMIUM CALLING POR	UEPXH	NA	NA	NA	$2.61	NA	NA	NA	NA	NA	
		2-WIRE VOICE UNBUNDLED 2-WAY KENTUCKY AREA CALLING PORT WITHOUT LUD	UEPXJ	NA	NA	NA	$2.61	NA	NA	NA	NA	NA	
		2-WIRE VOICE UNBUNDLED 2-WAY PBX LOUISIANA LOCAL OPTIONAL CALLING PORT	UEPXK	NA	NA	NA	NA	$2.20	NA	NA	NA	NA	
		2-WIRE VOICE UNBUNDLED 2-WAY PBX HOTEL/HOSPITAL ECONOMY ADMINISTRATIVE CALLING PORT	UEPXL	$2.07	$2.00	$1.85	$2.61	$2.20	$2.11	$2.00	$2.35	$1.90	
		2-WIRE VOICE UNBUNDLED 2-WAY PBX HOTEL/HOSPITAL ECONOMY ROOM CALLING PORT	URPXM	$2.07	$2.00	$1.85	$2.61	$2.20	$2.11	$2.00	$2.35	$1.90	
		2-WIRE VOICE UNBUNDLED 1-WAY OUTGOING PBX HOTEL/HOSPITAL ECONOMY ADMINIATRATIVE CALLING PORTTENNESSEE CALLING PORT	UEPXN	NA	NA	NA	NA	NA	NA	NA	NA	$1.90	
		2-WIRE VOICE UNBUNDLED 1-WAY OUTGOING PBX HOTEL/HOSPITAL DIACOUNT ROOM CALLING PORT	UEPXO	$2.07	$2.00	$1.85	$2.61	$2.20	$2.11	$2.00	$2.35	$1.90	
		2-WIRE VOICE UNBUNDLED 1-WAY OUTGOING PBX LOUISIANA LOCAL DISCOUNT CALLING PORT	UEPXP	NA	NA	NA	NA	$2.20	NA	NA	NA	NA	
		2-WIRE VOICE UNBUNDLED 2-WAY PBX MISSISSIPPI LOCAL ECONOMY CALLING PORT	UEPXQ	NA	NA	NA	NA	NA	$2.11	NA	NA	NA	
		2-WIRE VOICE UNBUNDLED 2-WAY PBX MISSISSIPPI LOCAL OPTIONAL CALLING PORT	UEPXR	NA	NA	NA	NA	NA	$2.11	NA	NA	NA	
		2-WIRE VOICE UNBUNDLED 1-WAY OUTGOING PBXMEASURED POR	UEPXS	$2.07	$2.00	$1.85	$2.61	$2.20	$2.11	$2.00	$2.35	$1.90	
		2-WIRE VOICE UNBUNDLED 2-WAY PBX SOUTH CAROLINA AREA PLUS CALLING PORT	UEPXT	NA	NA	NA	NA	NA	NA	NA	$2.35	NA	
		2-WIRE VOICE UNBUNDLED PBX COLLIERVILLE & MEMPHIS CALLING PORT	UEPXU	NA	NA	NA	NA	NA	NA	NA	NA	$1.90	
		2-WIRE VOICE UNBUNDLED 2-WAY PBX TENNESSEE REGIONSERV CALLING PORT	UEPXV	NA	NA	NA	NA	NA	NA	NA	NA	$1.90	
		UNBUNDLED LOOP BILLING USOC (REQUIRES ONE PER PORT)	UEPLX										
		LOCAL NUMBER PORTABILITY (REQUIRES ONE PER PORT)	LNPCP										
		NRC - 1st	UEPPC	$21.93	$38.00	$17.16	$36.47	$16.43	$22.98	$24.04	$24.36	NA	
		2 WIRE VOICE UNBUNDLED COMBINATION 2-WAY PBX TRUNK - Residenc	UEPRD	$21.93	$38.00	$17.16	$36.47	$16.43	$22.98	$21.60	$24.36	NA	
		LINE SIDE UNBUNDLED COMBINATION 2-WAY PBX TRUNK - BUSINESS	UEPPC	$21.93	$38.00	$17.16	$36.47	$16.43	$22.98	$24.04	$24.36	NA	
		LINE SIDE UNBUNDLED OUTWARD PBX TRUNK - BUSINESS	UEPPO	$21.93	$38.00	$17.16	$36.47	$16.43	$22.98	$24.04	$24.36	NA	
		LINE SIDE UNBUNDLED INCOMING PBX TRUNK - BUSINESS	UEPP1	$21.93	$38.00	$17.16	$36.47	$16.43	$22.98	$24.04	$24.36	NA	
		LONG DISTANCE TERMINAL PBX TRUNK-BUSINESS	UEPLD	$21.93	$38.00	$17.16	$36.47	$16.43	$22.98	$24.04	$24.36	NA	
		TN 2-WAY CALLING PLAN PBX TRUNK - BUSINESS	UEPT2	$21.93	$38.00	$17.16	$36.47	$16.43	$22.98	$24.04	$24.36	NA	
		TN OUTWARD CALLING PLAN PBX TRUNK - BUSINESS	UEPTO	$21.93	$38.00	$17.16	$36.47	$16.43	$22.98	$24.04	$24.36	NA	
		2-WIRE VOICE UNBUNDLED 2-WAY COMBINATION PBX ALABAMA CALLING PORT	UEPA2	$21.93	NA	NA	NA	NA	NA	NA	NA	NA	
		2-WIRE VOICE UNBUNDLED 2-WAY COMBINATION PBX LOUISIANA CALLING PORT	UEPL2	NA	NA	NA	NA	$16.43	NA	NA	NA	NA	
		2-WIRE VOICE UNBUNDLED PBX LD TERMINAL PORTS	UEPLD	$21.93	$38.00	$17.16	$36.47	$16.43	$22.98	$24.04	$24.36	NA	
		2-WIRE VOICE UNBUNDLED 2-WAY COMBINATION PBX TENNESSEE CALLING PORT	UEPT2	NA	NA	NA	NA	NA	NA	NA	NA	NA	
		2-WIRE VOICE UNBUNDLED 1-WAY OUTGOING PBX TENNESSEE CALLING PORT	UEPTO	NA	NA	NA	NA	NA	NA	NA	NA	NA	
		2-WIRE VOICE UNBUNDLED 2-WAY COMBINATION PBX USAGE POR	UEPXA	$21.93	$38.00	$17.16	$36.47	$16.43	$22.98	$24.04	$24.36	NA	

BELLSOUTH/ACCESS INTEGRATED RATES
NETWORK ELEMENTS
AND OTHER SERVICES
PORTS

		2-WIRE VOICE UNBUNDLED PBX TOLL TERMINAL HOTEL PORTS	UEPXB	$21.93	$38.00	$17.16	$36.47	$16.43	$22.98	$24.04	$24.36	NA
		2-WIRE VOICE UNBUNDLED PBX LD DDD TERMINALS POR	UEPXC	$21.93	$38.00	$17.16	$36.47	$16.43	$22.98	$24.04	$24.36	NA
		2-WIRE VOICE UNBUNDLED PBX LD TERMINAL SWITCHBOARD POR	UEPXD	$21.93	$38.00	$17.16	$36.47	$16.43	$22.98	$24.04	$24.36	NA
		2-WIRE VOICE UNBUNDLED PBX LD TERMINAL SWITCHBOARD IDE CAPABLE PORT	UEPXE	$21.93	$38.00	$17.16	$36.47	$16.43	$22.98	$24.04	$24.36	NA
		2-WIRE VOICE UNBUNDLED 2-WAY PBX KENTUCKY ROOM AREA CALLING PORT WITHOUT LUD	UEPXF	NA	NA	NA	$36.47	NA	NA	NA	NA	NA
		2-WIRE VOICE UNBUNDLED PBX KENTUCKY LUD AREA CALLING POR	UEPXG	NA	NA	NA	$36.47	NA	NA	NA	NA	NA
		2-WIRE VOICE UNBUNDLED PBX KENTUCKY PREMIUM CALLING POR	UEPXH	NA	NA	NA	$36.47	NA	NA	NA	NA	NA
		2-WIRE VOICE UNBUNDLED 2-WAY KENTUCKY AREA CALLING PORT WITHOUT LUD	UEPXJ	NA	NA	NA	$36.47	NA	NA	NA	NA	NA
		2-WIRE VOICE UNBUNDLED 2-WAY PBX LOUISIANA LOCAL OPTIONAL CALLING PORT	UEPXK	NA	NA	NA	NA	$16.43	NA	NA	NA	NA
		2-WIRE VOICE UNBUNDLED 2-WAY PBX HOTEL/HOSPITAL ECONOMY ADMINISTRATIVE CALLING PORT	UEPXL	$21.93	$38.00	$17.16	$36.47	$16.43	$22.98	$24.04	$24.36	NA
		2-WIRE VOICE UNBUNDLED 2-WAY PBX HOTEL/HOSPITAL ECONOMY ROOM CALLING PORT	URPXM	$21.93	$38.00	$17.16	$36.47	$16.43	$22.98	$24.04	$24.36	NA
		2-WIRE VOICE UNBUNDLED 1-WAY OUTGOING PBX HOTEL/HOSPITAL ECONOMY ADMINIATRATIVE CALLING PORTTENNESSEE CALLING PORT	UEPXN	NA	NA	NA	NA	NA	NA	NA	NA	NA
		2-WIRE VOICE UNBUNDLED 1-WAY OUTGOING PBX HOTEL/HOSPITAL DIACOUNT ROOM CALLING PORT	UEPXO	$21.93	$38.00	$17.16	$36.47	$16.43	$22.98	$24.04	$24.36	NA
		2-WIRE VOICE UNBUNDLED 1-WAY OUTGOING PBX LOUISIANA LOCAL DISCOUNT CALLING PORT	UEPXP	NA	NA	NA	NA	$16.43	NA	NA	NA	NA
		2-WIRE VOICE UNBUNDLED 2-WAY PBX MISSISSIPPI LOCAL ECONOMY CALLING PORT	UEPXQ	NA	NA	NA	NA	NA	$22.98	NA	NA	NA
		2-WIRE VOICE UNBUNDLED 2-WAY PBX MISSISSIPPI LOCAL OPTIONAL CALLING PORT	UEPXR	NA	NA	NA	NA	NA	$22.98	NA	NA	NA
		2-WIRE VOICE UNBUNDLED 1-WAY OUTGOING PBXMEASURED POR	UEPXS	$21.93	$38.00	$17.16	$36.47	$16.43	$22.98	$24.04	$24.36	NA
		2-WIRE VOICE UNBUNDLED 2-WAY PBX SOUTH CAROLINA AREA PLUS CALLING PORT	UEPXT	NA	NA	NA	NA	NA	NA	NA	$24.36	NA
		2-WIRE VOICE UNBUNDLED PBX COLLIERVILLE & MEMPHIS CALLING PORT	UEPXU	NA	NA	NA	NA	NA	NA	NA	NA	NA
		2-WIRE VOICE UNBUNDLED 2-WAY PBX TENNESSEE REGIONSERV CALLING PORT	UEPXV	NA	NA	NA	NA	NA	NA	NA	NA	NA
		NRC - Add'l										
		2 WIRE VOICE UNBUNDLED COMBINATION 2-WAY PBX TRUNK - Residenc	UEPRD	$21.93	$15.00	$17.16	$36.47	$16.43	$22.98	$21.60	$24.36	NA
		LINE SIDE UNBUNDLED COMBINATION 2-WAY PBX TRUNK - BUSINESS	UEPPC	$21.93	$15.00	$17.16	$36.47	$16.43	$22.98	$9.05	$24.36	NA
		LINE SIDE UNBUNDLED OUTWARD PBX TRUNK - BUSINESS	UEPPO	$21.93	$15.00	$17.16	$36.47	$16.43	$22.98	$9.05	$24.36	NA
		LINE SIDE UNBUNDLED INCOMING PBX TRUNK - BUSINESS	UEPP1	$21.93	$15.00	$17.16	$36.47	$16.43	$22.98	$9.05	$24.36	NA
		LONG DISTANCE TERMINAL PBX TRUNK-BUSINESS	UEPLD	$21.93	$15.00	$17.16	$36.47	$16.43	$22.98	$9.05	$24.36	NA
		TN 2-WAY CALLING PLAN PBX TRUNK - BUSINESS	UEPT2	$21.93	$15.00	$17.16	$36.47	$16.43	$22.98	$9.05	$24.36	NA
		TN OUTWARD CALLING PLAN PBX TRUNK - BUSINESS	UEPTO	$21.93	$15.00	$17.16	$36.47	$16.43	$22.98	$9.05	$24.36	NA
		2-WIRE VOICE UNBUNDLED 2-WAY COMBINATION PBX ALABAMA CALLING PORT	UEPA2	$21.93	NA	NA	NA	NA	NA	NA	NA	NA
		2-WIRE VOICE UNBUNDLED 2-WAY COMBINATION PBX LOUISIANA CALLING PORT	UEPL2	NA	NA	NA	NA	$16.43	NA	NA	NA	NA
		2-WIRE VOICE UNBUNDLED PBX LD TERMINAL PORTS	UEPLD	$21.93	$15.00	$17.16	$36.47	$16.43	$22.98	$9.05	$24.36	NA
		2-WIRE VOICE UNBUNDLED 2-WAY COMBINATION PBX TENNESSEE CALLING PORT	UEPT2	NA	NA	NA	NA	NA	NA	NA	NA	NA
		2-WIRE VOICE UNBUNDLED 1-WAY OUTGOING PBX TENNESSEE CALLING PORT	UEPTO	NA	NA	NA	NA	NA	NA	NA	NA	NA
		2-WIRE VOICE UNBUNDLED 2-WAY COMBINATION PBX USAGE POR	UEPXA	$21.93	$15.00	$17.16	$36.47	$16.43	$22.98	$9.05	$24.36	NA
		2-WIRE VOICE UNBUNDLED PBX TOLL TERMINAL HOTEL PORTS	UEPXB	$21.93	$15.00	$17.16	$36.47	$16.43	$22.98	$9.05	$24.36	NA
		2-WIRE VOICE UNBUNDLED PBX LD DDD TERMINALS POR	UEPXC	$21.93	$15.00	$17.16	$36.47	$16.43	$22.98	$9.05	$24.36	NA
		2-WIRE VOICE UNBUNDLED PBX LD TERMINAL SWITCHBOARD POR	UEPXD	$21.93	$15.00	$17.16	$36.47	$16.43	$22.98	$9.05	$24.36	NA
		2-WIRE VOICE UNBUNDLED PBX LD TERMINAL SWITCHBOARD IDE CAPABLE PORT	UEPXE	$21.93	$15.00	$17.16	$36.47	$16.43	$22.98	$9.05	$24.36	NA
		2-WIRE VOICE UNBUNDLED 2-WAY PBX KENTUCKY ROOM AREA CALLING PORT WITHOUT LUD	UEPXF	NA	NA	NA	$36.47	NA	NA	NA	NA	NA

BELLSOUTH/ACCESS INTEGRATED RATES
NETWORK ELEMENTS
AND OTHER SERVICES
PORTS

		2-WIRE VOICE UNBUNDLED PBX KENTUCKY LUD AREA CALLING POR	UEPXG	NA	NA	NA	$37.47	NA	NA	NA	NA	NA	
		2-WIRE VOICE UNBUNDLED PBX KENTUCKY PREMIUM CALLING POR	UEPXH	NA	NA	NA	$38.47	NA	NA	NA	NA	NA	
		2-WIRE VOICE UNBUNDLED 2-WAY KENTUCKY AREA CALLING PORT WITHOUT LUD	UEPXJ	NA	NA	NA	$39.47	NA	NA	NA	NA	NA	
		2-WIRE VOICE UNBUNDLED 2-WAY PBX LOUISIANA LOCAL OPTIONAL CALLING PORT	UEPXK	NA	NA	NA	NA	$16.43	NA	NA	NA	NA	
		2-WIRE VOICE UNBUNDLED 2-WAY PBX HOTEL/HOSPITAL ECONOMY ADMINISTRATIVE CALLING PORT	UEPXL	$21.93	$15.00	$17.16	$36.47	$16.43	$22.98	$9.05	$24.36	NA	
		2-WIRE VOICE UNBUNDLED 2-WAY PBX HOTEL/HOSPITAL ECONOMY ROOM CALLING PORT	URPXM	$21.93	$15.00	$17.16	$36.47	$16.43	$22.98	$9.05	$24.36	NA	
		2-WIRE VOICE UNBUNDLED 1-WAY OUTGOING PBX HOTEL/HOSPITAL ECONOMY ADMINIATRATIVE CALLING PORTTENNESSEE CALLING PORT	UEPXN	NA	NA	NA	NA	NA	NA	NA	NA	NA	
		2-WIRE VOICE UNBUNDLED 1-WAY OUTGOING PBX HOTEL/HOSPITAL DIACOUNT ROOM CALLING PORT	UEPXO	$21.93	$15.00	$17.16	$36.47	$16.43	$22.98	$9.05	$24.36	NA	
		2-WIRE VOICE UNBUNDLED 1-WAY OUTGOING PBX LOUISIANA LOCAL DISCOUNT CALLING PORT	UEPXP	NA	NA	NA	NA	$16.43	NA	NA	NA	NA	
		2-WIRE VOICE UNBUNDLED 2-WAY PBX MISSISSIPPI LOCAL ECONOMY CALLING PORT	UEPXQ	NA	NA	NA	NA	NA	$22.98	NA	NA	NA	
		2-WIRE VOICE UNBUNDLED 2-WAY PBX MISSISSIPPI LOCAL OPTIONAL CALLING PORT	UEPXR	NA	NA	NA	NA	NA	$22.98	NA	NA	NA	
		2-WIRE VOICE UNBUNDLED 1-WAY OUTGOING PBXMEASURED POR	UEPXS	$21.93	$15.00	$17.16	$36.47	$16.43	$22.98	$9.05	$24.36	NA	
		2-WIRE VOICE UNBUNDLED 2-WAY PBX SOUTH CAROLINA AREA PLUS CALLING PORT	UEPXT	NA	NA	NA	NA	NA	NA	NA	$24.36	NA	
		2-WIRE VOICE UNBUNDLED PBX COLLIERVILLE & MEMPHIS CALLING PORT	UEPXU	NA	NA	NA	NA	NA	NA	NA	NA	NA	
		2-WIRE VOICE UNBUNDLED 2-WAY PBX TENNESSEE REGIONSERV CALLING PORT	UEPXV	NA	NA	NA	NA	NA	NA	NA	NA	NA	
		NRC - Disconnect Charge - 1s											
		2 WIRE VOICE UNBUNDLED COMBINATION 2-WAY PBX TRUNK - Residence		$6.21	NA	NA	NA	$3.77	$6.56	NA	NA	NA	
		LINE SIDE UNBUNDLED COMBINATION 2-WAY PBX TRUNK - BUSINESS		$6.21	NA	NA	NA	$3.77	$6.56	NA	NA	NA	
		LINE SIDE UNBUNDLED OUTWARD PBX TRUNK - BUSINESS		$6.21	NA	NA	NA	$3.77	$6.56	NA	NA	NA	
		LINE SIDE UNBUNDLED INCOMING PBX TRUNK - BUSINESS		$6.21	NA	NA	NA	$3.77	$6.56	NA	NA	NA	
		LONG DISTANCE TERMINAL PBX TRUNK-BUSINESS		$6.21	NA	NA	NA	$3.77	$6.56	NA	NA	NA	
		TN 2-WAY CALLING PLAN PBX TRUNK - BUSINESS		$6.21	NA	NA	NA	$3.77	$6.56	NA	NA	NA	
		TN OUTWARD CALLING PLAN PBX TRUNK - BUSINESS		$6.21	NA	NA	NA	$3.77	$6.56	NA	NA	NA	
		2-WIRE VOICE UNBUNDLED 2-WAY COMBINATION PBX ALABAMA CALLING PORT		$6.21	NA	NA	NA	NA	NA	NA	NA	NA	
		2-WIRE VOICE UNBUNDLED 2-WAY COMBINATION PBX LOUISIANA CALLING PORT		NA	NA	NA	NA	$3.77	NA	NA	NA	NA	
		2-WIRE VOICE UNBUNDLED PBX LD TERMINAL PORTS		$6.21	NA	NA	NA	$3.77	$6.56	NA	NA	NA	
		2-WIRE VOICE UNBUNDLED 2-WAY COMBINATION PBX TENNESSEE CALLING PORT		NA	NA	NA	NA	NA	NA	NA	NA	NA	
		2-WIRE VOICE UNBUNDLED 1-WAY OUTGOING PBX TENNESSEE CALLING PORT		NA	NA	NA	NA	NA	NA	NA	NA	NA	
		2-WIRE VOICE UNBUNDLED 2-WAY COMBINATION PBX USAGE POR		$6.21	NA	NA	NA	$3.77	$6.56	NA	NA	NA	
		2-WIRE VOICE UNBUNDLED PBX TOLL TERMINAL HOTEL PORTS		$6.21	NA	NA	NA	$3.77	$6.56	NA	NA	NA	
		2-WIRE VOICE UNBUNDLED PBX LD DDD TERMINALS POR		$6.21	NA	NA	NA	$3.77	$6.56	NA	NA	NA	
		2-WIRE VOICE UNBUNDLED PBX LD TERMINAL SWITCHBOARD POR		$6.21	NA	NA	NA	$3.77	$6.56	NA	NA	NA	
		2-WIRE VOICE UNBUNDLED PBX LD TERMINAL SWITCHBOARD IDE CAPABLE PORT		$6.21	NA	NA	NA	$3.77	$6.56	NA	NA	NA	
		2-WIRE VOICE UNBUNDLED 2-WAY PBX KENTUCKY ROOM AREA CALLING PORT WITHOUT LUD		NA	NA	NA	NA	NA	NA	NA	NA	NA	
		2-WIRE VOICE UNBUNDLED PBX KENTUCKY LUD AREA CALLING POR		NA	NA	NA	NA	NA	NA	NA	NA	NA	
		2-WIRE VOICE UNBUNDLED PBX KENTUCKY PREMIUM CALLING POR		NA	NA	NA	NA	NA	NA	NA	NA	NA	
		2-WIRE VOICE UNBUNDLED 2-WAY KENTUCKY AREA CALLING PORT WITHOUT LUD		NA	NA	NA	NA	NA	NA	NA	NA	NA	
		2-WIRE VOICE UNBUNDLED 2-WAY PBX LOUISIANA LOCAL OPTIONAL CALLING PORT		NA	NA	NA	NA	$3.77	NA	NA	NA	NA	

BELLSOUTH/ACCESS INTEGRATED RATES
NETWORK ELEMENTS
AND OTHER SERVICES
PORTS

			2-WIRE VOICE UNBUNDLED 2-WAY PBX HOTEL/HOSPITAL ECONOMY ADMINISTRATIVE CALLING PORT		$6.21	NA	NA	NA	$3.77	$6.56	NA	NA	NA	
			2-WIRE VOICE UNBUNDLED 2-WAY PBX HOTEL/HOSPITAL ECONOMY ROOM CALLING PORT		$6.21	NA	NA	NA	$3.77	$6.56	NA	NA	NA	
			2-WIRE VOICE UNBUNDLED 1-WAY OUTGOING PBX HOTEL/HOSPITAL ECONOMY ADMINIATRATIVE CALLING PORTTENNESSEE CALLING PORT		NA	NA	NA	NA	NA	NA	NA	NA	NA	
			2-WIRE VOICE UNBUNDLED 1-WAY OUTGOING PBX HOTEL/HOSPITAL DIACOUNT ROOM CALLING PORT		$6.21	NA	NA	NA	$3.77	$6.56	NA	NA	NA	
			2-WIRE VOICE UNBUNDLED 1-WAY OUTGOING PBX LOUISIANA LOCAL DISCOUNT CALLING PORT		$6.21	NA	NA	NA	$3.77	$6.56	NA	NA	NA	
			2-WIRE VOICE UNBUNDLED 2-WAY PBX MISSISSIPPI LOCAL ECONOMY CALLING PORT		NA	NA	NA	NA	NA	$6.56	NA	NA	NA	
			2-WIRE VOICE UNBUNDLED 2-WAY PBX MISSISSIPPI LOCAL OPTIONAL CALLING PORT		NA	NA	NA	NA	NA	$6.56	NA	NA	NA	
			2-WIRE VOICE UNBUNDLED 1-WAY OUTGOING PBXMEASURED POR'		$6.21	NA	NA	NA	$3.77	$6.56	NA	NA	NA	
			2-WIRE VOICE UNBUNDLED 2-WAY PBX SOUTH CAROLINA AREA PLUS CALLING PORT		NA	NA	NA	NA	NA	NA	NA	NA	NA	
			2-WIRE VOICE UNBUNDLED PBX COLLIERVILLE & MEMPHIS CALLING PORT		NA	NA	NA	NA	NA	NA	NA	NA	NA	
			2-WIRE VOICE UNBUNDLED 2-WAY PBX TENNESSEE REGIONSERV CALLING PORT		NA	NA	NA	NA	NA	NA	NA	NA	NA	
			NRC - Disconnect Charge - Add'											
			2 WIRE VOICE UNBUNDLED COMBINATION 2-WAY PBX TRUNK - Residence		$6.21	NA	NA	NA	$3.77	$6.56	NA	NA	NA	
			LINE SIDE UNBUNDLED COMBINATION 2-WAY PBX TRUNK - BUSINESS		$6.21	NA	NA	NA	$3.77	$6.56	NA	NA	NA	
			LINE SIDE UNBUNDLED OUTWARD PBX TRUNK - BUSINESS		$6.21	NA	NA	NA	$3.77	$6.56	NA	NA	NA	
			LINE SIDE UNBUNDLED INCOMING PBX TRUNK - BUSINESS		$6.21	NA	NA	NA	$3.77	$6.56	NA	NA	NA	
			LONG DISTANCE TERMINAL PBX TRUNK-BUSINESS		$6.21	NA	NA	NA	$3.77	$6.56	NA	NA	NA	
			TN 2-WAY CALLING PLAN PBX TRUNK - BUSINESS		$6.21	NA	NA	NA	$3.77	$6.56	NA	NA	NA	
			TN OUTWARD CALLING PLAN PBX TRUNK - BUSINESS		$6.21	NA	NA	NA	$3.77	$6.56	NA	NA	NA	
			2-WIRE VOICE UNBUNDLED 2-WAY COMBINATION PBX ALABAMA CALLING PORT		$6.21	NA	NA	NA	NA	NA	NA	NA	NA	
			2-WIRE VOICE UNBUNDLED 2-WAY COMBINATION PBX LOUISIANA CALLING PORT		NA	NA	NA	NA	$3.77	NA	NA	NA	NA	
			2-WIRE VOICE UNBUNDLED PBX LD TERMINAL PORTS		$6.21	NA	NA	NA	$3.77	$6.56	NA	NA	NA	
			2-WIRE VOICE UNBUNDLED 2-WAY COMBINATION PBX TENNESSEE CALLING PORT		NA	NA	NA	NA	NA	NA	NA	NA	NA	
			2-WIRE VOICE UNBUNDLED 1-WAY OUTGOING PBX TENNESSEE CALLING PORT		NA	NA	NA	NA	NA	NA	NA	NA	NA	
			2-WIRE VOICE UNBUNDLED 2-WAY COMBINATION PBX USAGE POR'		$6.21	NA	NA	NA	$3.77	$6.56	NA	NA	NA	
			2-WIRE VOICE UNBUNDLED PBX TOLL TERMINAL HOTEL PORTS		$6.21	NA	NA	NA	$3.77	$6.56	NA	NA	NA	
			2-WIRE VOICE UNBUNDLED PBX LD DDD TERMINALS POR'		$6.21	NA	NA	NA	$3.77	$6.56	NA	NA	NA	
			2-WIRE VOICE UNBUNDLED PBX LD TERMINAL SWITCHBOARD POR'		$6.21	NA	NA	NA	$3.77	$6.56	NA	NA	NA	
			2-WIRE VOICE UNBUNDLED PBX LD TERMINAL SWITCHBOARD IDC CAPABLE PORT		$6.21	NA	NA	NA	$3.77	$6.56	NA	NA	NA	
			2-WIRE VOICE UNBUNDLED 2-WAY PBX KENTUCKY ROOM AREA CALLING PORT WITHOUT LUD		NA	NA	NA	NA	NA	NA	NA	NA	NA	
			2-WIRE VOICE UNBUNDLED PBX KENTUCKY LUD AREA CALLING POR'		NA	NA	NA	NA	NA	NA	NA	NA	NA	
			2-WIRE VOICE UNBUNDLED PBX KENTUCKY PREMIUM CALLING POR'		NA	NA	NA	NA	NA	NA	NA	NA	NA	
			2-WIRE VOICE UNBUNDLED 2-WAY KENTUCKY AREA CALLING PORT WITHOUT LUD		NA	NA	NA	NA	NA	NA	NA	NA	NA	
			2-WIRE VOICE UNBUNDLED 2-WAY PBX LOUISIANA LOCAL OPTIONAL CALLING PORT		NA	NA	NA	NA	$3.77	NA	NA	NA	NA	
			2-WIRE VOICE UNBUNDLED 2-WAY PBX HOTEL/HOSPITAL ECONOMY ADMINISTRATIVE CALLING PORT		$6.21	NA	NA	NA	$3.77	$6.56	NA	NA	NA	
			2-WIRE VOICE UNBUNDLED 2-WAY PBX HOTEL/HOSPITAL ECONOMY ROOM CALLING PORT		$6.21	NA	NA	NA	$3.77	$6.56	NA	NA	NA	
			2-WIRE VOICE UNBUNDLED 1-WAY OUTGOING PBX HOTEL/HOSPITAL ECONOMY ADMINIATRATIVE CALLING PORTTENNESSEE CALLING PORT		NA	NA	NA	NA	NA	NA	NA	NA	NA	

BELLSOUTH/ACCESS INTEGRATED RATES
NETWORK ELEMENTS
AND OTHER SERVICES
PORTS

		2-WIRE VOICE UNBUNDLED 1-WAY OUTGOING PBX HOTEL/HOSPITAL DIACOUNT ROOM CALLING PORT		$6.21	NA	NA	NA	$3.77	$6.56	NA	NA	NA	
		2-WIRE VOICE UNBUNDLED 1-WAY OUTGOING PBX LOUISIANA LOCAL DISCOUNT CALLING PORT		$6.21	NA	NA	NA	$3.77	$6.56	NA	NA	NA	
		2-WIRE VOICE UNBUNDLED 2-WAY PBX MISSISSIPPI LOCAL ECONOMY CALLING PORT		NA	NA	NA	NA	NA	$6.56	NA	NA	NA	
		2-WIRE VOICE UNBUNDLED 2-WAY PBX MISSISSIPPI LOCAL OPTIONAL CALLING PORT		NA	NA	NA	NA	NA	$6.56	NA	NA	NA	
		2-WIRE VOICE UNBUNDLED 1-WAY OUTGOING PBXMEASURED POR		$6.21	NA	NA	NA	$3.77	$6.56	NA	NA	NA	
		2-WIRE VOICE UNBUNDLED 2-WAY PBX SOUTH CAROLINA AREA PLUS CALLING PORT		NA	NA	NA	NA	NA	NA	NA	NA	NA	
		2-WIRE VOICE UNBUNDLED PBX COLLIERVILLE & MEMPHIS CALLING PORT		NA	NA	NA	NA	NA	NA	NA	NA	NA	
		2-WIRE VOICE UNBUNDLED 2-WAY PBX TENNESSEE REGIONSERV CALLING PORT		NA	NA	NA	NA	NA	NA	NA	NA	NA	
		NRC - Incremental Charge - Manual Service Order - 1s	SOMAN	$27.37	NA	$18.94	NA	$18.14	$25.52	$26.94	$41.86	NA	
		NRC - Incremental Charge - Manual Service Order - Add	SOMAN	$12.97	NA	$8.42	NA	$8.06	$11.34	$12.76	$14.46	NA	
		NRC - Incremental Charge - Manual Service Order - Disconnect - 1s	SOMAN	$17.77	NA	NA	NA	$8.94	$16.06	NA	NA	NA	
		NRC - Incremental Charge - Manual Service Order - Disconnect - Adc	SOMAN	$0.48	NA	NA	NA	NA	NA	NA	NA	NA	
	2-Wire Analog Line Port (PBX) including all available features, per month		UEPPC	NA	NA	NA	NA	NA	NA	NA	$8.67	NA	
		NRC - 1st	UEPPC	NA	NA	NA	NA	NA	NA	NA	$60.60	NA	
		NRC - Add'l	UEPPC	NA	NA	NA	NA	NA	NA	NA	$60.60	NA	
		NRC - Incremental Charge - Manual Service Order - 1s	SOMAN	NA	NA	NA	NA	NA	NA	NA	$41.86	NA	
		NRC - Incremental Charge - Manual Service Order - Add	SOMAN	NA	NA	NA	NA	NA	NA	NA	$14.46	NA	
	2-Wire Analog Line Port (PBX) including three available features, per month		UEPPC	NA	NA	NA	NA	NA	NA	NA	$5.38	NA	
		NRC - 1st	UEPPC	NA	NA	NA	NA	NA	NA	NA	$28.89	NA	
		NRC - Add'l	UEPPC	NA	NA	NA	NA	NA	NA	NA	$28.89	NA	
		NRC - Incremental Charge - Manual Service Order - 1s	SOMAN	NA	NA	NA	NA	NA	NA	NA	$41.86	NA	
		NRC - Incremental Charge - Manual Service Order - Add	SOMAN	NA	NA	NA	NA	NA	NA	NA	$14.46	NA	
	2-Wire Analog Hunting, per line per month		HTGUX	See features	NA	NA	$0.29	NA	See features	NA	See features	NA	
		NRC - 1st	HTGUX	See features	NA	NA	$2.14	NA	See features	NA	See features	NA	
		NRC - Add'l	HTGUX	See features	NA	NA	$2.14	NA	See features	NA	See features	NA	
	Coin Port, per month			$2.34	NA	$2.05	$3.04	$2.50	$2.32	NA	$2.77	$1.90	
		NRC - 1st		$21.93	NA	$17.16	$40.71	$16.43	$22.98	NA	$24.75	BST GSST A4.3.1	
		NRC - Add'l		$21.93	NA	$17.16	$40.71	$16.43	$22.98	NA	$24.75	BST GSST A4.3.1	
		NRC - Disconnect Charge - 1s		$5.21	NA	NA	NA	$4.15	$6.56	NA	NA	NA	
		NRC - Disconnect Charge - Add'		$5.21	NA	NA	NA	$4.15	$6.56	NA	NA	NA	
		NRC - Incremental Charge - Manual Service Order - 1s	SOMAN	$25.93	NA	$18.94	NA	$18.14	$25.52	NA	$43.48	NA	
		NRC - Incremental Charge - Manual Service Order - Add	SOMAN	$12.97	NA	$8.42	NA	$8.06	$11.34	NA	$14.57	NA	
		NRC - Incremental Charge - Manual Service Order - Disconnect - 1s	SOMAN	$16.33	NA	NA	NA	$9.86	$16.06	NA	NA	NA	
		NRC - Incremental Charge - Manual Service Order - Disconnect - Adc	SOMAN	$0.48	NA	NA	NA	NA	NA	NA	NA	NA	
	4- Wire Coin Port, per month			NA	NA	NA	NA	NA	NA	$2.59	NA	NA	
		NRC - 1st		NA	NA	NA	NA	NA	NA	$21.60	NA	NA	
		NRC - Add'l		NA	NA	NA	NA	NA	NA	$21.60	NA	NA	
		NRC - Disconnect Charge - 1s		NA	NA	NA	NA	NA	NA	NA	NA	NA	
		NRC - Disconnect Charge - Add'		NA	NA	NA	NA	NA	NA	NA	NA	NA	
		NRC - Incremental Charge - Manual Service Order - 1s		NA	NA	NA	NA	NA	NA	$26.94	NA	NA	
		NRC - Incremental Charge - Manual Service Order - Add		NA	NA	NA	NA	NA	NA	$12.76	NA	NA	
		NRC - Incremental Charge - Manual Service Order - Disconnect - 1s		NA	NA	NA	NA	NA	NA	NA	NA	NA	
		NRC - Incremental Charge - Manual Service Order - Disconnect - Adc		NA	NA	NA	NA	NA	NA	NA	NA	NA	
	Subsequent Ordering Charge – (per order, per line)			NA	NA	NA	NA	NA	NA	NA			
		NRC - Electronic - 1st		$2.88	NA	NA	NA	NA	$2.84	$5.42	$1.36	NA	
		NRC - Electronic - Add'l		$0.96	NA	NA	NA	NA	$0.95	$0.95	$0.71	NA	
		NRC - Manual - 1st		$4.80	NA	NA	NA	NA	$4.73	$1.89	$7.35	NA	

BELLSOUTH/ACCESS INTEGRATED RATES
NETWORK ELEMENTS
AND OTHER SERVICES
PORTS

	NRC - Manual - Add'l		$0.96	NA	NA	NA	NA	$0.95	NA	$0.95	NA	
	NRC - Disconnect		$2.88	NA	NA	NA	NA	$2.84	NA	NA	NA	
End Office Switching (Port Usage)												
	End Office Switching Function, per mou	N/A	$0.0018	$0.0175	$0.0016333	$0.002562	$0.0021	$0.0023771	$0.0017000	$0.0019295	$0.0019	
	End Office Switching Function, add'l mou (5)	N/A	NA	$0.005	NA	NA	NA	NA	NA	NA	NA	
	End Office Interoffice Trunk Port— Shared, per mou	N/A	$0.0002	NA	$0.0001564	NA	$0.0002	$0.0001927	NA	$0.0002581	NA	
Tandem Switching (Port Usage) (Local or Access Tandem)												
	Tandem Switching Function per mou	N/A	$0.00063	$0.00029	$0.0006757	$0.001096	$0.0008	$0.0007834	$0.0009	$0.0006843	$0.000676	
	Tandem Interoffice Trunk Port - Shared per mou			NA	$0.0002126	NA	$0.0003	$0.0002834	NA	$0.0004034	NA	
NOTES:												
1	Port rate includes all available features											
2	Transmission/usage charges associated with POTS circuit switched usage w also apply to circuit switched voice and/or circuit switched data transmission by B-Channels associated with 2-wire ISDN ports											
3	Access to B Channel or D Channel Packet capabilities will be avail- able only through BFR/New Business Request Process. Rates for the packet capabilities will be determined via the Bona Fide Request/New Business Request Process.											
4	This rate element is for those states which have a specific rate for User Profile per B Channel.											
5	This rate element is for use in those states with a different rate for additional minutes of use.											

BELLSOUTH/ACCESS INTEGRATED RATES
NETWORK ELEMENTS
AND OTHER SERVICES
LOOP/PORT COMBINATIONS

DESCRIPTION	USOC	AL	FL	GA	KY	LA	MS	NC	SC	TN
UNBUNDLED LOOP COMBINATIONS										
Unbundled Loop/Port Combinations (Note 4)										
MARKET RATES (INCLUDING ALL VERTICAL FEATURES) (Note 1)										
Density Zone 1 / Top 8 MSAs in BellSouth Region			**Orlando, Ft. Lauderdale, Miami**	**Atlanta**		**New Orleans**		**Greensboro-Winston Salem-Highpoint/ Charlotte-Gastonia-Rock Hill**		**Nashville**
Customers with 4 or more DS0 Equivalent										
Currently Combined (Note2)										
2-Wire Voice Grade Loop with 2-Wire Line Port (Res. and Bus.)										
2-Wire Voice Grade Line Port (Res.), per month										
2- wire voice unbundled port - residence	UEPRL	NA	$14.00	$14.00	NA	$14.00	NA	$14.00	NA	$14.00
2-wire voice unbundled port with caller ID - residence	UEPRC	NA	$14.00	$14.00	NA	$14.00	NA	$14.00	NA	$14.00
2-wire voice unbundled port outgoing only - residence	UEPRO	NA	$14.00	$14.00	NA	$14.00	NA	$14.00	NA	$14.00
2-wire voice grade unbundled Alabama extended local dialing parity port with caller ID	UEPAR	NA	NA	NA	NA	NA	NA	NA	NA	NA
2-wire voice grade unbundled Kentucky extended local dialing parity port with caller ID	UEPRM	NA	NA	NA	NA	NA	NA	NA	NA	NA
2-wire voice grade unbundled Louisiana extended local dialing parity port with caller ID	UEPAS	NA	NA	NA	NA	$14.00	NA	NA	NA	NA
2-wire voice grade unbundled Mississippi extended local dialing parity port with caller ID	UEPAT	NA	NA	NA	NA	NA	NA	NA	NA	NA
2-wire voice grade unbundled South Carolina extended local dialing parity port with caller ID	UEPAU	NA	NA	NA	NA	NA	NA	NA	NA	NA
2-wire voice grade unbundled Tennessee extended local dialing parity port with caller ID	UEPAQ	NA	NA	NA	NA	NA	NA	NA	NA	$14.00
2-wire voice unbundled Florida area calling with caller ID - residence	UEPAF	NA	$14.00	NA	NA	NA	NA	NA	NA	NA
2-wire voice unbundled Louisiana Area Plus with caller ID - residence (RUL)	UEPAG	NA	NA	NA	NA	$14.00	NA	NA	NA	NA
2-wire voice unbundled Louisiana Area Plus with caller ID - residence (AC7)	UEPAH	NA	NA	NA	NA	$14.00	NA	NA	NA	NA
2-wire voice unbundled South Carolina Area Calling port with Caller ID - residence (LW8)	UEPAJ	NA	NA	NA	NA	NA	NA	NA	NA	NA
2-wire voice unbundled Tennessee Area Calling port with Caller ID - residence (F2R)	UEPAK	NA	NA	NA	NA	NA	NA	NA	NA	$14.00
2-wire voice unbundled Tennessee Area Calling port with Caller ID - residence (TACER)	UEPAL	NA	NA	NA	NA	NA	NA	NA	NA	$14.00
2-wire voice unbundled Tennessee Area Calling port with Caller ID - residence (TACSR)	UEPAM	NA	NA	NA	NA	NA	NA	NA	NA	$14.00
2-wire voice unbundled Tennessee Area Calling port with Caller ID - residence (1MF2X)	UEPAN	NA	NA	NA	NA	NA	NA	NA	NA	$14.00
2-wire voice unbundled Tennessee Area Calling port with Caller ID - residence (2MR)	UEPAO	NA	NA	NA	NA	NA	NA	NA	NA	$14.00
2-wire voice unbundled res, low usage line port with Caller ID (LUM)	UEPAP	NA	$14.00	$14.00	NA	$14.00	NA	$14.00	NA	$14.00
2-Wire Voice Grade Line Port (Bus.), per month										
2-wire voice unbundled port without Caller ID	UEPBL	NA	$14.00	$14.00	NA	$14.00	NA	$14.00	NA	$14.00
2-wire voice unbundled port with unbundled port with Caller+E484 ID	UEPBC	NA	$14.00	$14.00	NA	$14.00	NA	$14.00	NA	$14.00
2-wire voice unbundled outgoing only port	UEPBO	NA	$14.00	$14.00	NA	$14.00	NA	$14.00	NA	$14.00
2-wire voice grade unbundled Alabama extended local dialing parity port with caller ID	UEPAW	NA	NA	NA	NA	NA	NA	NA	NA	NA
2-wire voice grade unbundled Kentucky extended local dialing parity port with caller ID	UEPBM	NA	NA	NA	NA	NA	NA	NA	NA	NA
2-wire voice grade unbundled Louisiana extended local dialing parity port with caller ID	UEPAX	NA	NA	NA	NA	$14.00	NA	NA	NA	NA
2-wire voice grade unbundled Mississippi extended local dialing parity port with caller ID	UEPAY	NA	NA	NA	NA	NA	NA	NA	NA	NA

BELLSOUTH/ACCESS INTEGRATED RATES
NETWORK ELEMENTS
AND OTHER SERVICES
LOOP/PORT COMBINATIONS

DESCRIPTION	USOC	AL	FL	GA	KY	LA	MS	NC	SC	TN
2-wire voice grade unbundled South Carolina extended local dialing parity port with caller ID	UEPAZ	NA	NA	NA	NA	NA	NA	NA	NA	NA
2-wire voice grade unbundled Tennessee extended local dialing parity port with caller ID	UEPAV	NA	NA	NA	NA	NA	NA	NA	NA	$14.00
2-wire voice unbundled incoming only port with Caller ID	UEPB1	NA	$14.00	$14.00	NA	$14.00	NA	$14.00	NA	$14.00
2-wire voice unbundled LA Bus Area Calling Port with Caller ID (BUC)	UEPAA	NA	NA	NA	NA	$14.00	NA	NA	NA	NA
2-wire voice unbundled SC Bus Area Calling Port with Caller ID (LMB)	UEPAB	NA	NA	NA	NA	NA	NA	NA	NA	NA
2-wire voice unbundled TN Bus 2-Way Area Calling Port Economy Option (TACC1)	UEPAC	NA	NA	NA	NA	NA	NA	NA	NA	$14.00
2-wire voice unbundled TN Bus 2-Way Area Calling Port Standard Option (TACC2)	UEPAD	NA	NA	NA	NA	NA	NA	NA	NA	$14.00
2-wire voice unbundled TN Bus 2-WAY Collierville and Memphis Local Calling Port (B2F)	UEPAE	NA	NA	NA	NA	NA	NA	NA	NA	$14.00
2-Wire Voice Grade Loop (SL1) (Res. and Bus.)										
RC - 2-Wire Voice Grade Loop - Statewide	UEPLX	NA	NA	NA	NA	NA	NA	$14.18	NA	NA
RC - 2-Wire Voice Grade Loop Zone 1	UEPLX	NA	$14.90	$10.80	NA	$14.05	NA	NA	NA	$15.92
RC - 2-Wire Voice Grade Loop Zone 2	UEPLX	NA	$18.51	$12.47	NA	$24.14	NA	NA	NA	$20.79
RC - 2-Wire Voice Grade Loop Zone 3	UEPLX	NA	$24.25	$19.83	NA	$49.30	NA	NA	NA	$27.18
Combination Rates										
RC - 2-Wire Voice Grade Loop with 2-Wire Line Port, Statewide	Note 8	NA	NA	NA	NA	NA	NA	$28.18	NA	NA
RC - 2-Wire Voice Grade Loop with 2-Wire Line Port, Zone 1 (Note 6)	Note 8	NA	$28.90	$24.80	NA	$28.05	NA	NA	NA	$29.92
RC - 2-Wire Voice Grade Loop with 2-Wire Line Port, Zone 2 (Note 6)	Note 8	NA	$32.51	$26.47	NA	$38.14	NA	NA	NA	$34.79
RC - 2-Wire Voice Grade Loop with 2-Wire Line Port, Zone 3 (Note 6)	Note 8	NA	$38.25	$33.83	NA	$63.30	NA	NA	NA	$41.18
All available features, per month	UEPVF	$2.64	$3.40	$0.00	$3.39	$3.08	$3.21	$3.04	$3.04	$0.00
Nonrecurring Charges										
2-Wire Voice Grade Line Port (Res. And Bus.)										
NRC - 2- wire voice grade unbundled port/loop combination - 1st, with chang		NA	$41.50	$41.50	NA	$41.50	NA	$41.50	NA	$41.50
NRC - 2- wire voice grade unbundled port/loop combination - Add'l, with chang		NA	$41.50	$41.50	NA	$41.50	NA	$41.50	NA	$41.50
NRC - 2- wire voice grade unbundled port/loop combination - 1st, no chang		NA	$41.50	$41.50	NA	$41.50	NA	$41.50	NA	$41.50
NRC - 2- wire voice grade unbundled port/loop combination - Add'l, no chang		NA	$41.50	$41.50	NA	$41.50	NA	$41.50	NA	$41.50
NRC - 2-Wire Voice Grade Loop/Line Port Combination - Subsequer		NA	$10.00	$10.00	NA	$10.00	NA	$10.00	NA	$10.00
NRC - 2-Wire Voice Grade Loop/Line Port Combination - OSS LSR Charge, Electronic per LSR received from the CLEC by one of the OSS interactive interfaces	SOMEC	NA	$2.75	$3.50	NA	$3.50	NA	$3.50	NA	$3.50
NRC - 2-Wire Voice Grade Loop/Line Port Combination - Incremental Cost - Manua Svc.Order vs. Electronic - 1st	SOMAN	NA	$21.56	$33.76	NA	$31.92	NA	$40.18	NA	$30.89
NRC - 2-Wire Voice Grade Loop/Line Port Combination - Incremental Cost - Manua Svc.Order vs. Electronic - Add'l	SOMAN	NA	$21.56	$7.86	NA	$7.32	NA	$9.45	NA	$7.03
NRC- 2 Wire Voice Grade Loop/Line Port Combination - Subsequent Database Update Electronic		NA	TBD	TBD	NA	$2.11	NA	$1.42	NA	TBD
NRC- 2 Wire Voice Grade Loop/Line Port Combination - Subsequent Database Update Manual Service Order		NA	TBD	TBD	NA	$5.12	NA	$10.27	NA	TBD
NRC - Electronic Service Order Disconnec		NA	$0.42	NA	NA	NA	NA	NA	NA	NA
NRC - Incremental Manual Service Order Disconnec		NA	$3.84	$20.00	NA	$20.00	NA	$20.00	NA	$20.00
2-Wire Voice Grade Loop with 2-Wire Line Port PBX										
2-Wire Analog Line Port (PBX), per month										
2 WIRE VOICE UNBUNDLED COMBINATION 2-WAY PBX TRUNK - Residence	UEPRD	NA	$14.00	$14.00	NA	$14.00	NA	$14.00	NA	$14.00
LINE SIDE UNBUNDLED COMBINATION 2-WAY PBX TRUNK - BUSINESS	UEPPC	NA	$14.00	$14.00	NA	$14.00	NA	$14.00	NA	$14.00
LINE SIDE UNBUNDLED OUTWARD PBX TRUNK - BUSINESS	UEPPO	NA	$14.00	$14.00	NA	$14.00	NA	$14.00	NA	$14.00

BELLSOUTH/ACCESS INTEGRATED RATES
NETWORK ELEMENTS
AND OTHER SERVICES
LOOP/PORT COMBINATIONS

DESCRIPTION	USOC	AL	FL	GA	KY	LA	MS	NC	SC	TN
LINE SIDE UNBUNDLED INCOMING PBX TRUNK - BUSINESS	UEPP1	NA	$14.00	$14.00	NA	$14.00	NA	$14.00	NA	$14.00
2-WIRE VOICE UNBUNDLED 2-WAY COMBINATION PBX ALABAMA CALLING PORT	UEPA2	NA	NA	NA	NA	NA	NA	NA	NA	NA
2-WIRE VOICE UNBUNDLED 2-WAY COMBINATION PBX LOUISIANA CALLING PORT	UEPL2	NA	NA	NA	NA	$14.00	NA	NA	NA	NA
2-WIRE VOICE UNBUNDLED PBX LD TERMINAL PORTS	UEPLD	NA	$14.00	$14.00	NA	$14.00	NA	$14.00	NA	$14.00
2-WIRE VOICE UNBUNDLED 2-WAY COMBINATION PBX TENNESSEE CALLING PORT	UEPT2	NA	NA	NA	NA	NA	NA	NA	NA	$14.00
2-WIRE VOICE UNBUNDLED 1-WAY OUTGOING PBX TENNESSEE CALLING PORT	UEPTO	NA	NA	NA	NA	NA	NA	NA	NA	$14.00
2-WIRE VOICE UNBUNDLED 2-WAY COMBINATION PBX USAGE POR	UEPXA	NA	$14.00	$14.00	NA	$14.00	NA	$14.00	NA	$14.00
2-WIRE VOICE UNBUNDLED PBX TOLL TERMINAL HOTEL PORTS	UEPXB	NA	$14.00	$14.00	NA	$14.00	NA	$14.00	NA	$14.00
2-WIRE VOICE UNBUNDLED PBX LD DDD TERMINALS POR	UEPXC	NA	$14.00	$14.00	NA	$14.00	NA	$14.00	NA	$14.00
2-WIRE VOICE UNBUNDLED PBX LD TERMINAL SWITCHBOARD POR	UEPXD	NA	$14.00	$14.00	NA	$14.00	NA	$14.00	NA	$14.00
2-WIRE VOICE UNBUNDLED PBX LD TERMINAL SWITCHBOARD IDD CAPABLE PORT	UEPXE	NA	$14.00	$14.00	NA	$14.00	NA	$14.00	NA	$14.00
2-WIRE VOICE UNBUNDLED 2-WAY PBX KENTUCKY ROOM AREA CALLING PORT WITHOUT LUD	UEPXF	NA	NA	NA	NA	NA	NA	NA	NA	NA
2-WIRE VOICE UNBUNDLED PBX KENTUCKY LUD AREA CALLING POR	UEPXG	NA	NA	NA	NA	NA	NA	NA	NA	NA
2-WIRE VOICE UNBUNDLED PBX KENTUCKY PREMIUM CALLING POR	UEPXH	NA	NA	NA	NA	NA	NA	NA	NA	NA
2-WIRE VOICE UNBUNDLED 2-WAY KENTUCKY AREA CALLING PORT WITHOUT LUD	UEPXJ	NA	NA	NA	NA	NA	NA	NA	NA	NA
2-WIRE VOICE UNBUNDLED 2-WAY PBX LOUISIANA LOCAL OPTIONAL CALLING PORT	UEPXK	NA	NA	NA	NA	$14.00	NA	NA	NA	NA
2-WIRE VOICE UNBUNDLED 2-WAY PBX HOTEL/HOSPITAL ECONOMY ADMINISTRATIVE CALLING PORT	UEPXL	NA	$14.00	$14.00	NA	$14.00	NA	$14.00	NA	$14.00
2-WIRE VOICE UNBUNDLED 2-WAY PBX HOTEL/HOSPITAL ECONOMY ROOM CALLING PORT	UEPXM	NA	$14.00	$14.00	NA	$14.00	NA	$14.00	NA	$14.00
2-WIRE VOICE UNBUNDLED 1-WAY OUTGOING PBX HOTEL/HOSPITAL ECONOMY ADMINIATRATIVE CALLING PORTTENNESSEE CALLING PORT	UEPXN	NA	NA	NA	NA	NA	NA	NA	NA	$14.00
2-WIRE VOICE UNBUNDLED 1-WAY OUTGOING PBX HOTEL/HOSPITAL DIACOUNT ROOM CALLING PORT	UEPXO	NA	$14.00	$14.00	NA	$14.00	NA	$14.00	NA	$14.00
2-WIRE VOICE UNBUNDLED 1-WAY OUTGOING PBX LOUISIANA LOCAL DISCOUNT CALLING PORT	UEPXP	NA	NA	NA	NA	$14.00	NA	NA	NA	NA
2-WIRE VOICE UNBUNDLED 2-WAY PBX MISSISSIPPI LOCAL ECONOMY CALLING PORT	UEPXQ	NA	NA	NA	NA	NA	NA	NA	NA	NA
2-WIRE VOICE UNBUNDLED 2-WAY PBX MISSISSIPPI LOCAL OPTIONAL CALLING PORT	UEPXR	NA	NA	NA	NA	NA	NA	NA	NA	NA
2-WIRE VOICE UNBUNDLED 1-WAY OUTGOING PBXMEASURED POR	UEPXS	NA	$14.00	$14.00	NA	$14.00	NA	$14.00	NA	$14.00
2-WIRE VOICE UNBUNDLED 2-WAY PBX SOUTH CAROLINA AREA PLUS CALLING PORT	UEPXT	NA	NA	NA	NA	NA	NA	NA	NA	NA
2-WIRE VOICE UNBUNDLED PBX COLLIERVILLE & MEMPHIS CALLING PORT	UEPXU	NA	NA	NA	NA	NA	NA	NA	NA	$14.00
2-WIRE VOICE UNBUNDLED 2-WAY PBX TENNESSEE REGIONSERV CALLING PORT	UEPXV	NA	NA	NA	NA	NA	NA	NA	NA	$14.00
LOCAL NUMBER PORTABILITY (REQUIRES ONE PER PORT)	LNPCP									
2-Wire Voice Grade Loop (SL1)										
RC - 2- Wire Voice Grade Loop - Statewide	UEPLX	NA	NA	NA	NA	NA	NA	$14.18	NA	NA
RC - 2- Wire Voice Grade Loop - Zone 1	UEPLX	NA	$14.90	$10.80	NA	$14.05	NA	NA	NA	$15.92
RC - 2- Wire Voice Grade Loop - Zone 2	UEPLX	NA	$18.51	$12.47	NA	$24.14	NA	NA	NA	$20.79
RC - 2- Wire Voice Grade Loop - Zone 3	UEPLX	NA	$24.25	$19.83	NA	$49.30	NA	NA	NA	$27.18
RC - 2- Wire Voice Grade Loop - Zone 4	UEPLX	NA	NA	NA	NA	NA	NA	NA	NA	NA
Combination Rates										
RC - 2-Wire Voice Grade Loop with 2-Wire Line Port, Statewide	Note 8	NA	NA	NA	NA	NA	NA	$28.18	NA	NA
RC - 2-Wire Voice Grade Loop with 2-Wire Line Port, Zone 1 (Note 6)	Note 8	NA	$28.90	$24.80	NA	$28.05	NA	NA	NA	$29.92
RC - 2-Wire Voice Grade Loop with 2-Wire Line Port, Zone 2 (Note 6)	Note 8	NA	$32.51	$26.47	NA	$38.14	NA	NA	NA	$34.79

BELLSOUTH/ACCESS INTEGRATED RATES
NETWORK ELEMENTS
AND OTHER SERVICES
LOOP/PORT COMBINATIONS

DESCRIPTION	USOC	AL	FL	GA	KY	LA	MS	NC	SC	TN
RC - 2-Wire Voice Grade Loop with 2-Wire Line Port, Zone 3 (Note 6)	Note 8	NA	$38.25	$33.83	NA	$63.30	NA	NA	NA	$41.18
All available features, per month	UEPVF	$2.64	$3.40	$0.00	$3.39	$3.08	$3.21	$3.04	$3.04	$0.00
Nonrecurring Charges										
NRC - 2- wire voice grade unbundled port/loop combination - 1st, with chang		NA	$41.50	$41.50	NA	$41.50	NA	$41.50	NA	$41.50
NRC - 2- wire voice grade unbundled port/loop combination - Add'l, with chang		NA	$41.50	$41.50	NA	$41.50	NA	$41.50	NA	$41.50
NRC - 2- wire voice grade unbundled port/loop combination - 1st, no chang		NA	$41.50	$41.50	NA	$41.50	NA	$41.50	NA	$41.50
NRC - 2- wire voice grade unbundled port/loop combination - Add'l, no chang		NA	$41.50	$41.50	NA	$41.50	NA	$41.50	NA	$41.50
NRC - 2-Wire Voice Grade Loop/Line Port Combination - Subsequer		NA	$10.00	$10.00	$10.00	$10.00	NA	$10.00	NA	$10.00
NRC - 2-Wire Voice Grade Loop/Line Port Combination - OSS LSR Charge, Electronic per LSR received from the CLEC by one of the OSS interactive interfaces (Note 7)	SOMEC	NA	$2.75	$3.50	NA	$3.50	NA	$3.50	NA	$3.50
NRC - 2-Wire Voice Grade Loop/Line Port Combination - Incremental Cost - Manua Svc.Order vs. Electronic - 1st	SOMAN	NA	$21.56	$33.67	NA	$31.92	NA	$40.18	NA	$30.89
NRC - 2-Wire Voice Grade Loop/Line Port Combination - Incremental Cost - Manua Svc.Order vs. Electronic - Add'l	SOMAN	NA	$21.56	$7.88	NA	$7.32	NA	$9.45	NA	$7.03
NRC- 2 Wire Voice Grade Loop/Line Port Combination - Subsequent Database Update Electronic		NA	TBD	TBD	NA	$2.11	NA	$1.42	NA	TBD
NRC- 2 Wire Voice Grade Loop/Line Port Combination - Subsequent Database Update Manual Service Order		NA	TBD	TBD	NA	$5.12	NA	$10.27	NA	TBD
NRC - Electronic Service Order Disconnec		NA	$0.42	NA	NA	NA	NA	NA	NA	NA
NRC - Incremental Manual Service Order Disconnect		NA	$3.84	$20.00	NA	$20.00	NA	$20.00	NA	$20.00
COST BASED RATES (Notes 2 & 3)										
Currently Combined										
2-Wire Voice Grade Loop with 2-Wire Line Port										
2-Wire Voice Grade Line Port (Res.), per month										
2- wire voice unbundled port - residence	UEPRL	$2.20	$1.35	$1.79	$2.61	$2.55	$2.12	$2.28	$3.69	$4.54
2-wire voice unbundled port with caller ID - residenc	UEPRC	$2.20	$1.35	$1.79	$2.61	$2.55	$2.12	$2.28	$3.69	$4.54
2-wire voice unbundled port outgoing only - residenc	UEPRO	$2.20	$1.35	$1.79	$2.61	$2.55	$2.12	$2.28	$3.69	$4.54
2-wire voice grade unbundled Alabama extended local dialing parity port with caller ID	UEPAR	$2.20	NA	NA	NA	NA	NA	NA	NA	NA
2-wire voice grade unbundled Kentucky extended local dialing parity port with caller ID	UEPRM	NA	NA	NA	$2.61	NA	NA	NA	NA	NA
2-wire voice grade unbundled Louisiana extended local dialing parity port with caller ID	UEPAS	NA	NA	NA	NA	$2.55	NA	NA	NA	NA
2-wire voice grade unbundled Mississippi extended local dialing parity port with calle ID	UEPAT	NA	NA	NA	NA	NA	$2.12	NA	NA	NA
2-wire voice grade unbundled South Carolina extended local dialing parity port witl caller ID	UEPAU	NA	NA	NA	NA	NA	NA	NA	$3.69	NA
2-wire voice grade unbundled Tennessee extended local dialing parity port with calle ID	UEPAQ	NA	NA	NA	NA	NA	NA	NA	NA	$4.54
2-wire voice unbundled Florida area calling with caller ID - residenc	UEPAF	NA	$1.35	NA	NA	NA	NA	NA	NA	NA
2-wire voice unbundled Louisiana Area Plus with caller ID - residence (RUI	UEPAG	NA	NA	NA	NA	$2.55	NA	NA	NA	NA
2-wire voice unbundled Louisiana Area Plus with caller ID - residence (AC7	UEPAH	NA	NA	NA	NA	$2.55	NA	NA	NA	NA
2-wire voice unbundled South Carolina Area Calling port with Caller ID - residenc (LW8)	UEPAJ	NA	NA	NA	NA	NA	NA	NA	$3.69	NA
2-wire voice unbundled Tennessee Area Calling port with Caller ID - residence (F2R)	UEPAK	NA	NA	NA	NA	NA	NA	NA	NA	$4.54

BELLSOUTH/ACCESS INTEGRATED RATES
NETWORK ELEMENTS
AND OTHER SERVICES
LOOP/PORT COMBINATIONS

DESCRIPTION	USOC	AL	FL	GA	KY	LA	MS	NC	SC	TN
2-wire voice unbundled Tennessee Area Calling port with Caller ID - residence (TACER)	UEPAL	NA	NA	NA	NA	NA	NA	NA	NA	$4.54
2-wire voice unbundled Tennessee Area Calling port with Caller ID - residence (TACSR)	UEPAM	NA	NA	NA	NA	NA	NA	NA	NA	$4.54
2-wire voice unbundled Tennessee Area Calling port with Caller ID - residence (1MF2X)	UEPAN	NA	NA	NA	NA	NA	NA	NA	NA	$4.54
2-wire voice unbundled Tennessee Area Calling port with Caller ID - residence (2MR)	UEPAO	NA	NA	NA	NA	NA	NA	NA	NA	$4.54
2-wire voice unbundled res, low usage line port with Caller ID (LUM	UEPAP	$2.20	$1.35	$1.79	$2.61	$2.55	$2.12	$2.28	$3.69	$4.54
2-Wire Voice Grade Line Port (Bus.), per month										
2-wire voice unbundled port without Caller ID	UEPBL	$2.20	$1.35	$1.79	$2.61	$2.55	$2.12	$2.28	$3.69	$4.54
2-wire voice unbundled port with unbundled port with Caller+E484 ID	UEPBC	$2.20	$1.35	$1.79	$2.61	$2.55	$2.12	$2.28	$3.69	$4.54
2-wire voice unbundled outgoing only port	UEPBO	$2.20	$1.35	$1.79	$2.61	$2.55	$2.12	$2.28	$3.69	$4.54
2-wire voice grade unbundled Alabama extended local dialing parity port with caller ID	UEPAW	$2.20	NA	NA	NA	NA	NA	NA	NA	NA
2-wire voice grade unbundled Kentucky extended local dialing parity port with caller ID	UEPBM	NA	NA	NA	$2.61	NA	NA	NA	NA	NA
2-wire voice grade unbundled Louisiana extended local dialing parity port with caller ID	UEPAX	NA	NA	NA	NA	$2.55	NA	NA	NA	NA
2-wire voice grade unbundled Mississippi extended local dialing parity port with calle ID	UEPAY	NA	NA	NA	NA	NA	$2.12	NA	NA	NA
2-wire voice grade unbundled South Carolina extended local dialing parity port witl caller ID	UEPAZ	NA	NA	NA	NA	NA	NA	NA	$3.69	NA
2-wire voice grade unbundled Tennessee extended local dialing parity port with calle ID	UEPAV	NA	NA	NA	NA	NA	NA	NA	NA	$4.54
2-wire voice unbundled incoming only port with Caller ID	UEPB1	$2.20	$1.35	$1.79	$2.61	$2.55	$2.12	$2.28	$3.69	$4.54
2-wire voice unbundled LA Bus Area Calling Port with Caller ID (BUC	UEPAA	NA	NA	NA	NA	$2.55	NA	NA	NA	NA
2-wire voice unbundled SC Bus Area Calling Port with Caller ID (LME	UEPAB	NA	NA	NA	NA	NA	NA	NA	$3.69	NA
2-wire voice unbundled TN Bus 2-Way Area Calling Port Economy Option (TACC1)	UEPAC	NA	NA	NA	NA	NA	NA	NA	NA	$4.54
2-wire voice unbundled TN Bus 2-Way Area Calling Port Standard Option (TACC2)	UEPAD	NA	NA	NA	NA	NA	NA	NA	NA	$4.54
2-wire voice unbundled TN Bus 2-WAY Collierville and Memphis Local Calling Por (B2F)	UEPAE	NA	NA	NA	NA	NA	NA	NA	NA	$4.54
2-Wire Voice Grade Loop (SL1)										
RC - 2- Wire Voice Grade Loop - Statewide	UEPLX	NA	NA	NA	NA	NA	NA	$14.18	NA	NA
RC - 2- Wire Voice Grade Loop - Zone 1	UEPLX	$14.35	$14.90	$10.80	$14.79	$14.05	$14.59	NA	$17.02	$12.48
RC - 2- Wire Voice Grade Loop - Zone 2	UEPLX	$23.31	$18.51	$12.47	$27.68	$24.14	$19.33	NA	$25.66	$14.42
RC - 2- Wire Voice Grade Loop - Zone 3	UEPLX	$42.24	$24.25	$19.83	$47.78	$49.30	$27.63	NA	$33.99	$21.77
RC - 2- Wire Voice Grade Loop - Zone 4	UEPLX	NA	NA	NA	NA	NA	$36.47	NA	NA	NA
Combination Rates										
RC - 2-Wire Voice Grade Loop with 2-Wire Line Port, Statewide	Note 8	NA	NA	NA	NA	NA	NA	$16.46	NA	NA
RC - 2-Wire Voice Grade Loop with 2-Wire Line Port, Zone 1 (Note 6)	Note 8	$16.55	$16.25	$12.59	$17.40	$16.60	$16.71	NA	$20.71	$17.02
RC - 2-Wire Voice Grade Loop with 2-Wire Line Port, Zone 2 (Note 6)	Note 8	$25.51	$19.86	$14.26	$30.29	$26.69	$21.45	NA	$29.35	$18.96
RC - 2-Wire Voice Grade Loop with 2-Wire Line Port, Zone 3 (Note 6)	Note 8	$44.44	$25.60	$21.62	$50.39	$51.85	$29.75	NA	$37.68	$26.31
RC - 2-Wire Voice Grade Loop with 2-Wire Line Port, Zone 4 (Note 6)	Note 8	NA	NA	NA	NA	NA	$38.59	NA	NA	NA
All available features, per month	UEPVF	$2.64	$3.40	$0.00	$3.39	$3.08	$3.21	$3.04	$3.04	$0.00
Nonrecurring Charges										
NRC - 2-Wire Voice Grade Loop/Line Port Combination - 1st, Switch as i	USAC2	$2.80	$0.1964	$2.01	$10.00	$3.80	$5.20	$2.77	$1.59	$1.03
NRC - 2-Wire Voice Grade Loop/Line Port Combination - Add'l, Switch as i	USAC2	$0.41	$0.1964	$0.3108	$10.00	$0.29	$0.41	$0.40	$0.40	$0.2886
NRC - 2-Wire Voice Grade Loop/Line Port Combination - 1st, Switch with chang	USACC	$2.80	$0.1964	$2.01	$10.00	$3.80	$5.20	$2.77	$1.59	$1.03
NRC - 2-Wire Voice Grade Loop/Line Port Combination - Add'l, Switch with change	USACC	$0.41	$0.1964	$0.3108	$10.00	$0.29	$0.41	$0.40	$0.40	$0.2886
NRC - 2-Wire Voice Grade Loop/Line Port Combination - Subsequer	USAS2	$10.00	$10.00	$10.00	$10.00	$10.00	$10.00	$10.00	$10.00	$10.00
NRC - 2-Wire Voice Grade Loop/Line Port Combination - OSS LSR Charge, Electronic per LSR received from the CLEC by one of the OSS interactive interfaces (Note 7)	SOMEC	$3.50	$2.75	$3.50	$3.50	$3.50	$3.50	$3.50	$3.50	$3.50

BELLSOUTH/ACCESS INTEGRATED RATES
NETWORK ELEMENTS
AND OTHER SERVICES
LOOP/PORT COMBINATIONS

DESCRIPTION	USOC	AL	FL	GA	KY	LA	MS	NC	SC	TN
NRC - 2-Wire Voice Grade Loop/Line Port Combination - Incremental Cost - Manua Svc.Order vs. Electronic - 1st	SOMAN	$40.71	$21.56	$33.67	$19.99	$31.92	$43.52	$40.18	$43.19	$30.89
NRC - 2-Wire Voice Grade Loop/Line Port Combination - Incremental Cost - Manua Svc.Order vs. Electronic - Add'l	SOMAN	$9.58	$21.56	$7.88	$19.99	$7.32	$9.99	$9.45	$9.91	$7.03
NRC- 2 Wire Voice Grade Loop/Line Port Combination - Subsequent Database Update Electronic		$1.44	TBD	TBD	TBD	$2.11	$2.87	$1.42	$0.71	$0.76
NRC- 2 Wire Voice Grade Loop/Line Port Combination - Subsequent Database Update Manual Service Order		$8.25	TBD	TBD	TBD	$5.12	$6.88	$10.27	$8.91	$7.97
NRC - Electronic Service Order Disconnec		NA	$0.42	NA	NA	NA	NA	NA	NA	NA
NRC - Incremental Manual Service Order Disconnec		$20.00	$3.84	$20.00	$20.00	$20.00	$20.00	$20.00	$20.00	$20.00
NRCs for New (not Currently Combined) as ordered in Georgia										
NRC - 2-Wire Voice Grade Loop with 2-Wire Line Port - New - 1	UEPRL	NA	NA	$22.14	NA	NA	NA	NA	NA	NA
NRC - 2-Wire Voice Grade Loop with 2-Wire Line Port - New - Adc	UEPRL	NA	NA	$15.25	NA	NA	NA	NA	NA	NA
NRC - 2-Wire Voice Grade Loop with 2-Wire Line Port - New - 1	UEPRC	NA	NA	$22.14	NA	NA	NA	NA	NA	NA
NRC - 2-Wire Voice Grade Loop with 2-Wire Line Port - New - Adc	UEPRC	NA	NA	$15.25	NA	NA	NA	NA	NA	NA
NRC - 2-Wire Voice Grade Loop with 2-Wire Line Port - New - 1	UEPRO	NA	NA	$22.14	NA	NA	NA	NA	NA	NA
NRC - 2-Wire Voice Grade Loop with 2-Wire Line Port - New - Adc	UEPRO	NA	NA	$15.25	NA	NA	NA	NA	NA	NA
NRC - 2-Wire Voice Grade Loop with 2-Wire Line Port - New - 1	UEPAP	NA	NA	$22.14	NA	NA	NA	NA	NA	NA
NRC - 2-Wire Voice Grade Loop with 2-Wire Line Port - New - Adc	UEPAP	NA	NA	$15.25	NA	NA	NA	NA	NA	NA
NRC - 2-Wire Voice Grade Loop with 2-Wire Line Port - New - 1	UEPBL	NA	NA	$22.14	NA	NA	NA	NA	NA	NA
NRC - 2-Wire Voice Grade Loop with 2-Wire Line Port - New - Add'l	UEPBL	NA	NA	$15.25	NA	NA	NA	NA	NA	NA
NRC - 2-Wire Voice Grade Loop with 2-Wire Line Port - New - 1	UEPBC	NA	NA	$22.14	NA	NA	NA	NA	NA	NA
NRC - 2-Wire Voice Grade Loop with 2-Wire Line Port - New - Adc	UEPBC	NA	NA	$15.25	NA	NA	NA	NA	NA	NA
NRC - 2-Wire Voice Grade Loop with 2-Wire Line Port - New - 1	UEPBO	NA	NA	$22.14	NA	NA	NA	NA	NA	NA
NRC - 2-Wire Voice Grade Loop with 2-Wire Line Port - New - Adc	UEPBO	NA	NA	$15.25	NA	NA	NA	NA	NA	NA
NRC - 2-Wire Voice Grade Loop with 2-Wire Line Port - New - 1	UEPB1	NA	NA	$22.14	NA	NA	NA	NA	NA	NA
NRC - 2-Wire Voice Grade Loop with 2-Wire Line Port - New - Adc	UEPB1	NA	NA	$15.25	NA	NA	NA	NA	NA	NA
NRC - 2-Wire Voice Grade Loop/Line Port Combination - Subsequer	USAS2	NA	NA	$10.00	NA	NA	NA	NA	NA	NA
NRC - 2-Wire Voice Grade Loop with 2-Wire Line Port - New - Disconnect - 1		NA	NA	$8.45	NA	NA	NA	NA	NA	NA
NRC - 2-Wire Voice Grade Loop with 2-Wire Line Port - New - Disconnect - Adc		NA	NA	$3.91	NA	NA	NA	NA	NA	NA
NRC - 2-Wire Voice Grade Loop/Line Port Combination - OSS LSR Charge, Electronic per LSR received from the CLEC by one of the OSS interactive interfaces (Note 7)	SOMEC	NA	NA	$3.50	NA	NA	NA	NA	NA	NA
NRC - 2-Wire Voice Grade Loop with 2-Wire Line Port - Incremental Cost Manual vs Electronic - New - 1st		NA	NA	$37.06	NA	NA	NA	NA	NA	NA
NRC - 2-Wire Voice Grade Loop with 2-Wire Line Port - Incremental Cost Manual vs Electronic - New - Add'l		NA	NA	$8.19	NA	NA	NA	NA	NA	NA
NRC- 2 Wire Voice Grade Loop/Line Port Combination - Subsequent Database Update Electronic		NA	NA	TBD	NA	NA	NA	NA	NA	NA
NRC- 2 Wire Voice Grade Loop/Line Port Combination - Subsequent Database Update Manual Service Order		NA	NA	TBD	NA	NA	NA	NA	NA	NA
NRC - 2-Wire Voice Grade Loop with 2-Wire Line Port - Incremental Cost Manual vs Electronic - New - Disconnect		NA	NA	$11.17	NA	NA	NA	NA	NA	NA
2- Wire Voice Grade Loop - Bus Only with 2 -Wire DID Trunk Port										
2 - Wire Line Port - DID Trunk Port, per month	UEPD1	TBD	$9.36	$11.35	$10.84	$13.12	$14.63	$12.12	TBD	$8.78
2-Wire Voice Grade Loop (SL2)										
RC - 2- Wire Voice Grade Loop - Statewide	UECD1	NA	NA	NA	NA	NA	NA	$11.76	NA	NA
RC - 2- Wire Voice Grade Loop - Zone 1	UECD1	$17.95	$18.48	$16.84	$17.78	$17.65	$18.35	NA	$21.57	$9.60
RC - 2- Wire Voice Grade Loop - Zone 2	UECD1	$29.16	$22.43	$19.45	$23.96	$30.32	$24.33	NA	$32.53	$11.09
RC - 2- Wire Voice Grade Loop - Zone 3	UECD1	$52.84	$27.87	$30.92	$34.96	$61.93	$34.77	NA	$43.08	$16.74
RC - 2- Wire Voice Grade Loop - Zone 4	UECD1	NA	NA	NA	NA	NA	$45.88	NA	NA	NA

BELLSOUTH/ACCESS INTEGRATED RATES
NETWORK ELEMENTS
AND OTHER SERVICES
LOOP/PORT COMBINATIONS

DESCRIPTION	USOC	AL	FL	GA	KY	LA	MS	NC	SC	TN
Combination Rates										
RC - 2-Wire Voice Grade Loop with 2-Wire DID Port, Statewide	Note 8	NA	NA	NA	NA	NA	NA	$23.79	NA	NA
RC - 2-Wire Voice Grade Loop with 2-Wire DID Port, Zone 1 (Note 6)	Note 8	28.72	$27.84	$28.19	28.72	$30.77	28.72	NA	28.72	$18.38
RC - 2-Wire Voice Grade Loop with 2-Wire DID Port, Zone 2 (Note 6)	Note 8	34.91	$31.79	$30.80	34.91	$43.44	34.91	NA	34.91	$19.87
RC - 2-Wire Voice Grade Loop with 2-Wire DID Port, Zone 3 (Note 6)	Note 8	45.9	$37.23	$42.27	45.9	$75.05	45.9	NA	45.9	$25.52
RC - 2-Wire Voice Grade Loop with 2-Wire DID Port, Zone4 (Note 6)	Note 8	NA	NA	NA	NA	NA	TBD	NA	NA	NA
NRC- 2- Wire Voice Grade Loop with 2- Wire DID Port - Conversion - Switch As Is - 1 port	USAC1	$14.62	$14.62	$166.08	TBD	$14.60	$14.60	$13.26	$14.62	$8.76
NRC- 2- Wire Voice Grade Loop with 2- Wire DID Port - Conversion - Switch As Is Each Addl Port	USAC1	$3.73	$3.73	$140.01	TBD	$3.72	$3.72	$8.39	$3.73	$5.75
NRC- 2- Wire Voice Grade Loop with 2- Wire DID Port - Conversion with changes - 1 port	USA1C	$14.62	$14.62	$166.08	TBD	$14.60	$14.60	$13.26	$14.62	$8.76
NRC- 2- Wire Voice Grade Loop with 2- Wire DID Port - Conversion with changes Each Addl port	USA1C	$3.73	$3.73	$140.01	TBD	$3.72	$3.72	$8.39	$3.73	$5.75
NRC - 2-Wire DID Subsequent Activity - Per Svc Order - Add Trunks, Per Trun	USAS1	$53.57	$53.57	NA	NA	$53.50	$53.50	NA	$53.57	NA
NRC - 2-Wire Voice Grade Loop/Line Port Combination - OSS LSR Charge, Electronic per LSR received from the CLEC by one of the OSS interactive interfaces (Note 7)	SOMEC	$3.50	$2.75	$3.50	$3.50	$3.50	$3.50	$3.50	$3.50	$3.50
NRC- 2- Wire Voice Grade Loop with 2- Wire DID Port - Incremental Cost- Manua Service Order - 1st	SOMAN	$19.99	$21.56	$37.88	$19.99	$19.99	$19.99	$53.89	$19.99	$41.43
NRC- 2- Wire Voice Grade Loop with 2- Wire DID Port - Incremental Cost- Manua Service Order - Addl	SOMAN	$19.99	$21.56	$16.84	$19.99	$19.99	$19.99	$11.34	$19.99	$9.80
NRC - Electronic Service Order Disconnec		$0.42	$0.42	$0.42	$0.42	$0.42	$0.42	$0.42	$0.42	$0.42
NRC - Incremental Manual Service Order Disconnec		$20.00	$3.84	$20.00	$20.00	$20.00	$20.00	$20.00	$20.00	$20.00
Telephone Number/Trunk Group Establishment										
DID Trunk Termination (one required per port	NDT	$0.00	$0.00	$0.00	$0.00	$0.00	$0.00	$0.00	$0.00	$0.00
DID Numbers, Establish Trunk Group and Provide First Group of 20 DID Numbers (FL, GA, NC, & SC only)	NDZ	$0.00	$0.00	$0.00	$0.00	$0.00	$0.00	$0.00	$0.00	$0.00
DID Numbers, Establish Trunk Group and Provide First Group of 20 DID Numbers (AL, KY, LA, MS, & TN). In addition, Provides Additional DID Numbers for each Group of 2 DID Numbers (Valid in All States)	ND4	$0.00	$0.00	$0.00	$0.00	$0.00	$0.00	$0.00	$0.00	$0.00
DID Numbers, non-consective	ND5	$0.00	$0.00	$0.00	$0.00	$0.00	$0.00	$0.00	$0.00	$0.00
2-Wire ISDN Digital Grade Loop with 2-wire ISDN Digital Port										
2-wire ISDN Digital Port per month	UEPPB	$16.42	$8.51	$13.47	$12.99	$11.42	$51.91	$24.37	$33.74	$18.21
2-Wire ISDN Digital Grade Loop										
RC - 2-Wire ISDN Digital Grade Loop - Statewid	USL2X	NA	NA	NA	NA	NA	NA	$19.08	NA	NA
RC - 2-Wire ISDN Digital Grade Loop - Zone 1	USL2X	$23.23	$22.48	$21.89	$22.41	$28.87	$21.86	NA	$26.68	$16.20
RC - 2-Wire ISDN Digital Grade Loop - Zone 2	USL2X	$37.74	$27.90	$25.27	$31.10	$37.63	$28.97	NA	$40.24	$18.71
RC - 2-Wire ISDN Digital Grade Loop - Zone 3	USL2X	$68.38	$30.78	$40.17	$42.36	$48.42	$41.40	NA	$53.29	$28.25
RC - 2-Wire ISDN Digital Grade Loop - Zone 4	USL2X	NA	NA	NA	NA	NA	$54.64	NA	NA	NA
Combination Rates										
RC - 2-Wire ISDN Digital Grade Loop with 2-wire ISDN Digital Port - Statewide	Note 8	NA	NA	NA	NA	NA	NA	$43.45	NA	NA
RC - 2-Wire ISDN Digital Grade Loop with 2-wire ISDN Digital Port - Zone	Note 8	$39.65	$30.99	$35.36	$34.40	$34.84	$73.77	NA	$60.42	$34.41
RC - 2-Wire ISDN Digital Grade Loop with 2-wire ISDN Digital Port - Zone	Note 8	$54.16	$36.41	$38.74	$44.10	$43.20	$80.78	NA	$73.98	$36.92
RC - 2-Wire ISDN Digital Grade Loop with 2-wire ISDN Digital Port - Zone	Note 8	$84.80	$39.30	$53.64	$55.35	$59.69	$93.31	NA	$87.03	$46.46
RC - 2-Wire ISDN Digital Grade Loop with 2-wire ISDN Digital Port - Zone	Note 8	NA	NA	NA	NA	NA	$106.55	NA	NA	NA
All available features, per month	UEPVF	$2.64	$3.40	$0.00	$3.39	$3.08	$3.21	$3.04	$3.04	$0.00
NRC - 2-Wire ISDN Digital Grade Loop/2-wire ISDN Digital Port - 1st conversion	USACB	$79.12	$86.79	$239.95	$79.12	$79.01	$79.12	$174.35	$79.12	$117.23
NRC - 2-Wire ISDN Digital Grade Loop/2-wire ISDN Digital Port - Add'l conversion	USACB	$54.04	$54.04	$156.92	$54.04	$53.97	$54.04	$174.35	$54.04	$117.23
NRC - 2-Wire ISDN Digital Grade Loop/2-wire ISDN Digital Port - Non Feature Subsequent Activity	USASB	$53.50	$53.50	$53.50	$53.50	$53.50	$53.50	$53.50	$53.50	$212.88

BELLSOUTH/ACCESS INTEGRATED RATES
NETWORK ELEMENTS
AND OTHER SERVICES
LOOP/PORT COMBINATIONS

DESCRIPTION	USOC	AL	FL	GA	KY	LA	MS	NC	SC	TN
NRC - 2-Wire Voice Grade Loop/Line Port Combination - OSS LSR Charge, Electronic per LSR received from the CLEC by one of the OSS interactive interfaces (Note 7)	SOMEC	$3.50	$2.75	$3.50	$3.50	$3.50	$3.50	$3.50	$3.50	$3.50
NRC - 2-Wire ISDN Digital Grade Loop/2-wire ISDN Digital Port - Incremental Cost Manual Service Order - 1st	SOMAN	$19.99	$21.56	$19.99	$19.99	$19.99	$19.99	$19.99	$19.99	$19.99
NRC - 2-Wire ISDN Digital Grade Loop/2-wire ISDN Digital Port - Incremental Cost Manual Service Order - Addl	SOMAN	$19.99	$21.56	$19.99	$19.99	$19.99	$19.99	$19.99	$19.99	$19.99
NRC - Electronic Service Order Disconnec		$0.42	$0.42	$0.42	$0.42	$0.42	$0.42	$0.42	$0.42	$0.42
NRC - Incremental Manual Service Order Disconnec		$20.00	$3.84	$20.00	$20.00	$20.00	$20.00	$20.00	$20.00	$20.00
4 - Wire DS1 Digital Loop with 4 - Wire ISDN DS1 Digital Trunk Port										
4 - Wire ISDN DS1 Digital Trunk Por	UEPPP	$186.02	$95.39	$163.16	$113.21	$107.55	$213.21	$179.01	$214.79	$78.40
4 - Wire DS1 Digital Loop										
RC - 4- Wire DS1 Digital Loop- Statewide	USL4P	NA	NA	NA	NA	NA	NA	$62.71	NA	NA
RC - 4- Wire DS1 Digital Loop- Zone 1	USL4P	$51.74	$92.48	$55.53	$106.04	$100.70	$50.99	NA	$59.61	$57.73
RC - 4- Wire DS1 Digital Loop- Zone 2	USL4P	$84.05	$119.68	$3.21	$135.15	$129.12	$67.58	NA	$89.90	$75.40
RC - 4- Wire DS1 Digital Loop- Zone 3	USL4P	$152.29	$194.70	$101.93	$186.26	$344.16	$96.58	NA	$119.06	$98.59
RC - 4-Wire DS1 Digital Loop - Zone 4	USL4P	NA	NA	NA	NA	NA	$127.47	NA	NA	NA
Combination Rates										
RC - 4-Wire DS1 Digital Loop with 4-wire ISDN DS1 Digital Port - Statewid	Note 8	NA	NA	NA	NA	NA	NA	$241.72	NA	NA
RC - 4-Wire DS1 Digital Loop with 4-wire ISDN DS1 Digital Port - Zone	Note 8	$237.76	$187.87	$218.69	$219.25	$208.25	$264.20	NA	$274.40	$136.13
RC - 4-Wire DS1 Digital Loop with 4-wire ISDN DS1 Digital Port - Zone	Note 8	$270.07	$215.07	$227.29	$248.36	$236.67	$280.79	NA	$304.69	$153.80
RC - 4-Wire DS1 Digital Loop with 4-wire ISDN DS1 Digital Port - Zone	Note 8	$338.31	$290.08	$265.09	$299.47	$451.57	$309.79	NA	$333.85	$176.99
RC - 4-Wire DS1 Digital Loop with 4-wire ISDN DS1 Digital Port - Zone	Note 8	NA	NA	NA	NA	NA	$340.68	NA	NA	NA
Local Number Portability										
Local Number Portability (1 per port	LNPCN	$1.75	$1.75	$1.75	$1.75	$1.75	$1.75	$1.75	$1.75	$1.75
Interface (Provsioning Only)										
Voice/Data	PR71V	$0.00	$0.00	$0.00	$0.00	$0.00	$0.00	$0.00	$0.00	$0.00
Digital Data	PR71D	$0.00	$0.00	$0.00	$0.00	$0.00	$0.00	$0.00	$0.00	$0.00
Inward Data	PR71E	$0.00	$0.00	$0.00	$0.00	$0.00	$0.00	$0.00	$0.00	$0.00
Non-Recurring Charges										
NRC - 4-Wire DS1 Digital Loop with 4-wire ISDN DS1 Digital Port Combination - 1s conversion	USACP	$240.30	$247.97	$269.96	$240.30	$239.95	$240.30	$481.51	$240.30	$328.53
NRC - 4-Wire DS1 Digital Loop with 4-wire ISDN DS1 Digital Port Combination - Add conversion	USACP	$157.17	$157.17	$269.96	$157.17	$156.94	$157.17	$481.51	$157.17	$328.53
NRC -4 - Wire DS1 Digital Loop with 4 - Wire ISDN DS1 Digital Trunk Port Subsequent Channel Activation - Per Channel	USASP	$29.06	$29.06	$28.71	$29.06	$29.01	$29.06	$36.92	$29.06	$28.39
NRC - 4-Wire DS1 Digital Loop with 4-wire ISDN DS1 Digital Port Combination Subsequent Inward/2-way Telephone Numbers	PR7TG	$0.98	$0.9804	$0.9686	$0.98	$0.98	$0.98	$1.17	$0.98	$0.9353
NRC - 4-Wire DS1 Digital Loop with 4-wire ISDN DS1 Digital Port Combination Subsequent Outward Telephone numbers	PR7TP	$23.02	$23.02	$22.75	$23.02	$22.99	$23.02	$28.17	$23.02	$22.36
NRC - 4-Wire DS1 Digital Loop with 4-wire ISDN DS1 Digital Port Combination Subsequent Inward Telephone Numbers	PR7ZT	$46.05	$46.05	$45.49	$46.05	$45.98	$46.05	$56.33	$46.05	$44.71
NRC - 4-Wire DS1 Digital Loop with 4-wire ISDN DS1 Digital Port Combination Subsequent Service Order Per Order	USASP	$147.47	$147.47	$147.47	$147.47	$147.47	$147.47	$255.25	$147.47	$189.76
NRC - 2-Wire Voice Grade Loop/Line Port Combination - OSS LSR Charge, Electronic per LSR received from the CLEC by one of the OSS interactive interfaces (Note 7)	SOMEC	$3.50	$2.75	$3.50	$3.50	$3.50	$3.50	$3.50	$3.50	$3.50
NRC - 4-Wire DS1 Digital Loop with 4-wire ISDN Digital Port - Incremental Cost Manual Service Order - 1st	SOMAN	$19.99	$21.56	$19.99	$19.99	$19.99	$19.99	$19.99	$19.99	$19.99
NRC - 4-Wire ISDN Digital Loop with 4-wire ISDN Digital Port - Incremental Cost Manual Service Order - Addl	SOMAN	$19.99	$21.56	$19.99	$19.99	$19.99	$19.99	$19.99	$19.99	$19.99
NRC - Electronic Service Order Disconnec		$0.42	$0.42	$0.42	$0.42	$0.42	$0.42	$0.42	$0.42	$0.42
NRC - Incremental Manual Service Order Disconnec		$20.00	$3.84	$20.00	$20.00	$20.00	$20.00	$20.00	$20.00	$20.00
4 - Wire DS1 Digital Loop with 4 - Wire DDITS Trunk Port										
4 - Wire DDITS Digital Trunk Port (Formerly DID Trunk Por	UDD1T	$130.23	$63.31	$120.80	$83.28	$149.27	$146.46	$123.65	TBD	$120.00

BELLSOUTH/ACCESS INTEGRATED RATES
NETWORK ELEMENTS
AND OTHER SERVICES
LOOP/PORT COMBINATIONS

DESCRIPTION	USOC	AL	FL	GA	KY	LA	MS	NC	SC	TN
4 - Wire DS1 Digital Loop	USLDC									
4 - Wire DS1 Digital Loop - Statewide	USLDC	NA	NA		NA	NA	NA	$62.71	NA	NA
4 - Wire DS1 Digital Loop - Zone 1	USLDC	$51.74	$64.69	$55.53	$106.04	$56.32	$50.99	NA	$59.61	$57.73
4 - Wire DS1 Digital Loop - Zone 2	USLDC	$84.05	$94.71	$64.13	$135.15	$96.73	$67.58	NA	$89.90	$75.40
4 - Wire DS1 Digital Loop - Zone 3	USLDC	$152.29	$208.93	$101.93	$186.26	$197.57	$96.58	NA	$119.06	$98.59
4 - Wire DS1 Digital Loop - Zone 4	USLDC	NA	NA	NA	NA	NA	$127.47	NA	NA	NA
Combination Rates										
4 - Wire DS1 Digital Loop with 4 - Wire DDITS Trunk Port - Statewid	Note 8	NA	NA	NA	NA	NA	NA	$186.36	NA	NA
4 - Wire DS1 Digital Loop with 4 - Wire DDITS Trunk Port - Zone	Note 8	$181.97	$128.00	$176.33	$189.32	$205.59	$197.45	NA	TBD	$93.28
4 - Wire DS1 Digital Loop with 4 - Wire DDITS Trunk Port - Zone	Note 8	$214.28	$158.02	$184.93	$218.43	$246.00	$214.04	NA	TBD	$110.95
4 - Wire DS1 Digital Loop with 4 - Wire DDITS Trunk Port - Zone	Note 8	$282.52	$272.24	$222.73	$269.54	$346.84	$243.04	NA	TBD	$134.14
4 - Wire DS1 Digital Loop with 4 - Wire DDITS Trunk Port - Zone	Note 8	NA	NA	NA	NA	NA	$273.93	NA	NA	NA
Local number Portability per DSO Activated	LNPCP	$3.15	$3.15	$3.15	$3.15	$3.15	$3.15	$3.15	$3.15	$3.15
Central Office Terminating Poin	CTG	$0.00	$0.00	$0.00	$0.00	$0.00	$0.00	$0.00	$0.00	$0.00
Telephone Number / Trunk Group establishmen										
Telephone Number for 2-Way Trunk Grou	UDTGX	$0.00	$0.00	$0.00	$0.00	$0.00	$0.00	$0.00	$0.00	$0.00
Telephone Number for 1-Way Outward Trunk Group	UDTGY	$0.00	$0.00	$0.00	$0.00	$0.00	$0.00	$0.00	$0.00	$0.00
Telephone Number for 1-Way Inward Trunk Group Without DID	UDTGZ	$0.00	$0.00	$0.00	$0.00	$0.00	$0.00	$0.00	$0.00	$0.00
DID Numbers, Establish Trunk Group and Provide First Group of 20 DID Numbers (FL, GA, NC, & SC only)	NDZ	$0.00	$0.00	$0.00	$0.00	$0.00	$0.00	$0.00	$0.00	$0.00
DID Numbers, Establish Trunk Group and Provide First Group of 20 DID Numbers (AL, KY, LA, MS, & TN). In addition, Provides Additional DID Numbers for each Group of 2 DID Numbers (Valid in All States)	ND4	$0.00	$0.00	$0.00	$0.00	$0.00	$0.00	$0.00	$0.00	$0.00
DID Numbers, Non- consecutive DID Numbers , Per Numbe	ND5	$0.00	$0.00	$0.00	$0.00	$0.00	$0.00	$0.00	$0.00	$0.00
Interoffice Channel Mileage - (Dedicated DS1) FX/FCO for 4 - Wire DS1 Digital Loop with 4 - Wire DDITS Trunk Port										
Fixed cost 0-8 miles (Facilities Termination	1LNO1	$79.69	$92.62	$63.39	$55.05	$93.40	$74.40	$71.29	$94.98	$75.83
Additional costs per mile 0-8 miles	1LNOA	$0.6920	$0.2000	$0.3068	$0.4500	$0.7831	$0.6598	$0.0783	$0.7598	$0.3525
Fixed cost 9-25 miles (Facilities Termination	1LN02	$0.00	$0.00	$0.00	$0.00	$0.00	$0.00	$0.00	$0.00	$0.00
additional costs per mile 9-25 miles	1LNOB	$0.6920	$0.2000	$0.3068	$0.4500	$0.7831	$0.6598	$0.0783	$0.7598	$0.3525
Fixed cost 25 + miles (Facilities Termination	1LNO3	$0.00	$0.00	$0.00	$0.00	$0.00	$0.00	$0.00	$0.00	$0.00
Additional costs 25 + miles	1LNOC	$0.6920	$0.2000	$0.3068	$0.4500	$0.7831	$0.6598	$0.0783	$0.7598	$0.3525
Enhanced Performance Charges										
Enhanced Performance Charges - as negotiated in contrac	UDTPC	TBN	TBN	TBN	TBN	TBN	TBN	TBN	TBN	TBN
Non-recurring Charges										
NRC - 4-Wire DS1 Digital Loop with 4-Wire DDITS Trunk Port Combination - OSS LSR Charge, Electronic, per LSR received from the CLEC by one of the OSS interactive interfaces (Note 7)	SOMEC	$3.50	$2.75	$3.50	$3.50	$3.50	$3.50	$3.50	$3.50	$3.50
NRC- 4-Wire DS1 Digital Loop with 4-Wire DDITS Trunk Port - Incremental Cost Manual Service Order - 1st	SOMAN	$19.99	$21.56	$37.88	$19.99	$19.99	$19.99	$19.99	$19.99	$19.99
NRC- 4-Wire DS1 Digital Loop with 4-Wire DDITS Trunk Port - Incremental Cost Manual Service Order - Add'l	SOMAN	$19.99	$21.56	$16.84	$19.99	$19.99	$19.99	$19.99	$19.99	$19.99
NRC - Electronic Service Order Disconnec		TBD	$0.42	TBD	TBD	TBD	TBD	TBD	TBD	TBD
NRC - Incremental Manual Service Order Disconnec		$20.00	$3.84	$20.00	$20.00	$20.00	$20.00	$20.00	$20.00	$20.00
NRC -4 - Wire DS1 Digital Loop with 4 - Wire DDITS Trunk Port -Conversion - Switc as is - 1st	USAC4	TBD	$268.82	$269.96	$261.15	$266.76	TBD	$490.38	TBD	$312.91
NRC -4 - Wire DS1 Digital Loop with 4 - Wire DDITS Trunk Port - Conversion - Switc as is - Additional	USAC4	TBD	$134.07	$269.96	$134.08	$123.16	TBD	$490.38	TBD	$312.91
NRC -4 - Wire DS1 Digital Loop with 4 - Wire DDITS Trunk Port - Conversion with DS changes - 1st	USAWA	TBD	$268.82	$269.96	$261.15	$266.76	TBD	$490.38	TBD	$312.91
NRC -4 - Wire DS1 Digital Loop with 4 - Wire DDITS Trunk Port - Conversion with DS Changes - Additional	USAWA	TBD	$134.07	$269.96	$134.08	$123.16	TBD	$490.38	TBD	$312.91
NRC -4 - Wire DS1 Digital Loop with 4 - Wire DDITS Trunk Port - Conversion wit Change - Trunks - 1st	USAWB	TBD	$268.82	$269.96	$261.15	$266.76	TBD	$490.38	TBD	$312.91

BELLSOUTH/ACCESS INTEGRATED RATES
NETWORK ELEMENTS
AND OTHER SERVICES
LOOP/PORT COMBINATIONS

DESCRIPTION	USOC	AL	FL	GA	KY	LA	MS	NC	SC	TN
NRC -4 - Wire DS1 Digital Loop with 4 - Wire DDITS Trunk Port - Conversion wit Change - Trunks - Additional	USAWB	TBD	$134.07	$269.96	$134.08	$123.16	TBD	$490.38	TBD	$312.91
NRC -4 - Wire DS1 Digital Loop with 4 - Wire DDITS Digital Trunk Port - Subsequer Service Activity Per Service Order	USAS4	TBD	$54.00	$147.47	TBD	$68.57	TBD	$127.63	TBD	$94.88
NRC -4 - Wire DS1 Digital Loop with 4 - Wire DDITS Trunk Port - New - 1s	UDDIT	NA	NA	$858.30	NA	NA	NA	NA	NA	NA
NRC -4 - Wire DS1 Digital Loop with 4 - Wire DDITS Trunk Port - New - Additional	UDDIT	NA	NA	$514.02	NA	NA	NA	NA	NA	NA
NRC -4 - Wire DS1 Digital Loop with 4 - Wire DDITS Trunk Port - New - 1st Disconnect	UDDIT	NA	NA	TBD	NA	NA	NA	NA	NA	NA
NRC -4 - Wire DS1 Digital Loop with 4 - Wire DDITS Trunk Port - New - Additiona Disconnect	UDDIT	TBD	NA	TBD	TBD	NA	TBD	$11.98	TBD	$15.29
NRC -4 - Wire DS1 Digital Loop with 4 - Wire DDITS Trunk Port - Subsequent Channe Activation - Per Channel - 2-Way Trunk	UDTTA	TBD	$28.96	$28.71	$28.96	$26.60	TBD	$146.91	TBD	$108.67
NRC -4 - Wire DS1 Digital Loop with 4 - Wire DDITS Trunk Port - Subsequent Channe Activation - Per Channel - 1-Way Outward Trunk	UDTTB	TBD	$28.96	$28.71	$28.96	$26.60	TBD	$146.91	TBD	$108.67
NRC -4 - Wire DS1 Digital Loop with 4 - Wire DDITS Trunk Port - Subsequent Channe Activation - Per Channel - 1-Way Inward Trunk Without DID	UDTTC	TBD	$28.96	$28.71	$28.96	$26.60	TBD	$146.91	TBD	$108.67
NRC -4 - Wire DS1 Digital Loop with 4 - Wire DDITS Trunk Port - Subsequent Channe Activation - Per Channel - 1-Way Inward Trunk With DID	UDTTD	TBD	$28.96	$28.71	$28.96	$26.60	TBD	$146.91	TBD	$108.67
NRC -4 - Wire DS1 Digital Loop with 4 - Wire DDITS Trunk Port - Subsequent Channe Activation - Per Channel - 2-Way DID with User Transfer	UDTTE	TBD	$28.96	$28.71	$28.96	$26.60	TBD	$146.91	TBD	$108.67
NRC -4 - Wire DS1 Digital Loop with 4 - Wire DDITS Digital Trunk Port - Subsequer Signaling Changes		TBD	TBD	TBD	TBD	TBD	TBD	$29.65	TBD	$22.92
NRC -4 - Wire DS1 Digital Loop with 4 - Wire DDITS Digital Trunk Port - Subsequer Telephone Numbers		TBD	TBD	TBD	TBD	TBD	TBD	$120.96	TBD	$88.68
NRC - Interoffice Channel Mileage - (Dedicated DS1) FX/FCO for 4 - Wire DS1 Digital Loop with 4 - Wire DDITS Trunk PortFixed cost 0-8 miles (Facilities Termination) - 1st - New Only	1LNO1	$198.15	NA	$147.07	NA	NA	NA	NA	NA	NA
NRC - Interoffice Channel Mileage - (Dedicated DS1) FX/FCO for 4 - Wire DS1 Digital Loop with 4 - Wire DDITS Trunk PortFixed cost 0-8 miles (Facilities Termination) - Additional - New Only	1LNO2	$148.18	NA	$111.75	NA	NA	NA	NA	NA	NA
NRC - Interoffice Channel Mileage - (Dedicated DS1) FX/FCO for 4 - Wire DS1 Digital Loop with 4 - Wire DDITS Trunk PortFixed cost 0-8 miles (Facilities Termination) - Disconnect - 1st - New Only	1LNO3	$25.44	NA	NA	NA	NA	NA	NA	NA	NA
NRC - Interoffice Channel Mileage - (Dedicated DS1) FX/FCO for 4 - Wire DS1 Digital Loop with 4 - Wire DDITS Trunk PortFixed cost 0-8 miles (Facilities Termination) - Disconnect Additional - New Only	1LNO4	$20.42	NA	NA	NA	NA	NA	NA	NA	NA
BIPOLAR 8 ZERO SUSTITUTIOI										
NRC - Superframe Format - Conversion or new install 1st	CCOSF	$0.00	$0.00	$0.00	$0.00	$0.00	$0.00	$0.00	$0.00	$0.00
NRC - Superframe Format - Conversion or new install Additiona	CCOSF	$0.00	$0.00	$0.00	$0.00	$0.00	$0.00	$0.00	$0.00	$0.00
NRC - Extended Superframe Format - Change or Subsequent Activity - 1s	CCOSF	$0.00	$0.00	$0.00	$0.00	$0.00	$0.00	$0.00	$0.00	$0.00
NRC - Extended Superframe Format - Change or Subsequent Activity - Additiona	CCOSF	$600.00	$655.00	$600.00	$730.00	$605.00	$600.00	$615.00	$605.00	$590.00
NRC - Extended Superframe Format - Conversion or New Install 1s	CCOEF	$0.00	$0.00	$0.00	$0.00	$0.00	$0.00	$0.00	$0.00	$0.00
NRC - Extended Superframe Format - Conversion or New Install - Additiona	CCOEF	$0.00	$0.00	$0.00	$0.00	$0.00	$0.00	$0.00	$0.00	$0.00
NRC - Extended Superframe Format - Change or Subsequent Activity - 1s	CCOEF	$0.00	$0.00	$0.00	$0.00	$0.00	$0.00	$0.00	$0.00	$0.00
NRC - Extended Superframe Format - Change or Subsequent Activity - Additiona	CCOEF	$600.00	$655.00	$600.00	$730.00	$605.00	$600.00	$615.00	$605.00	$590.00
Alternate Mark Inversion (AMI										
NRC - Superframe Format - 1s	MCOSF	$0.00	$0.00	$0.00	$0.00	$0.00	$0.00	$0.00	$0.00	$0.00
NRC - Superframe Format - Additiona	MCOSF	$0.00	$0.00	$0.00	$0.00	$0.00	$0.00	$0.00	$0.00	$0.00
NRC - Extended Superframe Format - 1s	MCOPO	$0.00	$0.00	$0.00	$0.00	$0.00	$0.00	$0.00	$0.00	$0.00
NRC - Extended Superframe Format - Additiona	MCOPO	$0.00	$0.00	$0.00	$0.00	$0.00	$0.00	$0.00	$0.00	$0.00
2-Wire Voice Grade Loop with 2-Wire Line Port PBX										

BELLSOUTH/ACCESS INTEGRATED RATES
NETWORK ELEMENTS
AND OTHER SERVICES
LOOP/PORT COMBINATIONS

DESCRIPTION	USOC	AL	FL	GA	KY	LA	MS	NC	SC	TN
2-Wire Analog Line Port (PBX), per month										
2 WIRE VOICE UNBUNDLED COMBINATION 2-WAY PBX TRUNK - Residence	UEPRD	$2.20	$1.35	$1.79	$2.61	$2.55	$2.12	$2.28	$3.69	$4.54
LINE SIDE UNBUNDLED COMBINATION 2-WAY PBX TRUNK - BUSINESS	UEPPC	$2.20	$1.35	$1.79	$2.61	$2.55	$2.12	$2.28	$3.69	$4.54
LINE SIDE UNBUNDLED OUTWARD PBX TRUNK - BUSINESS	UEPPO	$2.20	$1.35	$1.79	$2.61	$2.55	$2.12	$2.28	$3.69	$4.54
LINE SIDE UNBUNDLED INCOMING PBX TRUNK - BUSINESS	UEPP1	$2.20	$1.35	$1.79	$2.61	$2.55	$2.12	$2.28	$3.69	$4.54
2-WIRE VOICE UNBUNDLED 2-WAY COMBINATION PBX ALABAMA CALLING PORT	UEPA2	$2.20	NA	NA	NA	NA	NA	NA	NA	NA
2-WIRE VOICE UNBUNDLED 2-WAY COMBINATION PBX LOUISIANA CALLING PORT	UEPL2	NA	NA	NA	NA	$2.55	NA	NA	NA	NA
2-WIRE VOICE UNBUNDLED PBX LD TERMINAL PORTS	UEPLD	$2.20	$1.35	$1.79	$2.61	$2.55	$2.12	$2.28	$3.69	$4.54
2-WIRE VOICE UNBUNDLED 2-WAY COMBINATION PBX TENNESSEE CALLING PORT	UEPT2	NA	NA	NA	NA	NA	NA	NA	NA	$4.54
2-WIRE VOICE UNBUNDLED 1-WAY OUTGOING PBX TENNESSEE CALLING PORT	UEPTO	NA	NA	NA	NA	NA	NA	NA	NA	$4.54
2-WIRE VOICE UNBUNDLED 2-WAY COMBINATION PBX USAGE POR	UEPXA	$2.20	$1.35	$1.79	$2.61	$2.55	$2.12	$2.28	$3.69	$4.54
2-WIRE VOICE UNBUNDLED PBX TOLL TERMINAL HOTEL PORTS	UEPXB	$2.20	$1.35	$1.79	$2.61	$2.55	$2.12	$2.28	$3.69	$4.54
2-WIRE VOICE UNBUNDLED PBX LD DDD TERMINALS POR	UEPXC	$2.20	$1.35	$1.79	$2.61	$2.55	$2.12	$2.28	$3.69	$4.54
2-WIRE VOICE UNBUNDLED PBX LD TERMINAL SWITCHBOARD POR	UEPXD	$2.20	$1.35	$1.79	$2.61	$2.55	$2.12	$2.28	$3.69	$4.54
2-WIRE VOICE UNBUNDLED PBX LD TERMINAL SWITCHBOARD IDD CAPABLE PORT	UEPXE	$2.20	$1.35	$1.79	$2.61	$2.55	$2.12	$2.28	$3.69	$4.54
2-WIRE VOICE UNBUNDLED 2-WAY PBX KENTUCKY ROOM AREA CALLING PORT WITHOUT LUD	UEPXF	NA	NA	NA	$2.61	NA	NA	NA	NA	NA
2-WIRE VOICE UNBUNDLED PBX KENTUCKY LUD AREA CALLING POR	UEPXG	NA	NA	NA	$2.61	NA	NA	NA	NA	NA
2-WIRE VOICE UNBUNDLED PBX KENTUCKY PREMIUM CALLING POR	UEPXH	NA	NA	NA	$2.61	NA	NA	NA	NA	NA
2-WIRE VOICE UNBUNDLED 2-WAY KENTUCKY AREA CALLING PORT WITHOUT LUD	UEPXJ	NA	NA	NA	$2.61	NA	NA	NA	NA	NA
2-WIRE VOICE UNBUNDLED 2-WAY PBX LOUISIANA LOCAL OPTIONAL CALLING PORT	UEPXK	NA	NA	NA	NA	$2.55	NA	NA	NA	NA
2-WIRE VOICE UNBUNDLED 2-WAY PBX HOTEL/HOSPITAL ECONOMY ADMINISTRATIVE CALLING PORT	UEPXL	$2.20	$1.35	$1.79	$2.61	$2.55	$2.12	$2.28	$3.69	$4.54
2-WIRE VOICE UNBUNDLED 2-WAY PBX HOTEL/HOSPITAL ECONOMY ROOM CALLING PORT	UEPXM	$2.20	$1.35	$1.79	$2.61	$2.55	$2.12	$2.28	$3.69	$4.54
2-WIRE VOICE UNBUNDLED 1-WAY OUTGOING PBX HOTEL/HOSPITAL ECONOMY ADMINIATRATIVE CALLING PORTTENNESSEE CALLING PORT	UEPXN	NA	NA	NA	NA	NA	NA	NA	NA	$4.54
2-WIRE VOICE UNBUNDLED 1-WAY OUTGOING PBX HOTEL/HOSPITAL DIACOUNT ROOM CALLING PORT	UEPXO	$2.20	$1.35	$1.79	$2.61	$2.55	$2.12	$2.28	$3.69	$4.54
2-WIRE VOICE UNBUNDLED 1-WAY OUTGOING PBX LOUISIANA LOCAL DISCOUNT CALLING PORT	UEPXP	NA	NA	NA	NA	$2.55	NA	NA	NA	NA
2-WIRE VOICE UNBUNDLED 2-WAY PBX MISSISSIPPI LOCAL ECONOMY CALLING PORT	UEPXQ	NA	NA	NA	NA	NA	$2.12	NA	NA	NA
2-WIRE VOICE UNBUNDLED 2-WAY PBX MISSISSIPPI LOCAL OPTIONAL CALLING PORT	UEPXR	NA	NA	NA	NA	NA	$2.12	NA	NA	NA
2-WIRE VOICE UNBUNDLED 1-WAY OUTGOING PBXMEASURED POR	UEPXS	$2.20	$1.35	$1.79	$2.61	$2.55	$2.12	$2.28	$3.69	$4.54
2-WIRE VOICE UNBUNDLED 2-WAY PBX SOUTH CAROLINA AREA PLUS CALLING PORT	UEPXT	NA	NA	NA	NA	NA	NA	NA	$3.69	NA
2-WIRE VOICE UNBUNDLED PBX COLLIERVILLE & MEMPHIS CALLING PORT	UEPXU	NA	NA	NA	NA	NA	NA	NA	NA	$4.54
2-WIRE VOICE UNBUNDLED 2-WAY PBX TENNESSEE REGIONSERV CALLING PORT	UEPXV	NA	NA	NA	NA	NA	NA	NA	NA	$4.54
LOCAL NUMBER PORTABILITY (REQUIRES ONE PER PORT)	LNPCP									
2-Wire Voice Grade Loop (SL1)										
RC - 2- Wire Voice Grade Loop - Statewide	UEPLX	NA	NA	NA	NA	NA	NA	$14.18	NA	NA
RC - 2- Wire Voice Grade Loop - Zone 1	UEPLX	$14.35	$14.90	$10.80	$14.79	$14.05	$14.59	NA	$17.02	$12.48
RC - 2- Wire Voice Grade Loop - Zone 2	UEPLX	$23.31	$18.51	$12.47	$27.68	$24.14	$19.33	NA	$25.66	$14.42
RC - 2- Wire Voice Grade Loop - Zone 3	UEPLX	$42.24	$24.25	$19.83	$47.78	$49.30	$27.63	NA	$33.99	$21.77

BELLSOUTH/ACCESS INTEGRATED RATES
NETWORK ELEMENTS
AND OTHER SERVICES
LOOP/PORT COMBINATIONS

DESCRIPTION	USOC	AL	FL	GA	KY	LA	MS	NC	SC	TN
RC - 2- Wire Voice Grade Loop - Zone 4	UEPLX	NA	NA	NA	NA	NA	$36.47	NA	NA	NA
Combination Rates										
RC - 2-Wire Voice Grade Loop with 2-Wire Line Port, Statewide	Note 8	NA	NA	NA	NA	NA	NA	$16.46	NA	NA
RC - 2-Wire Voice Grade Loop with 2-Wire Line Port, Zone 1 (Note 6)	Note 8	$16.55	$16.25	$12.59	#VALUE!	$16.60	$16.71	NA	$20.71	$17.02
RC - 2-Wire Voice Grade Loop with 2-Wire Line Port, Zone 2 (Note 6)	Note 8	$25.51	$19.86	$14.26	#VALUE!	$26.69	$21.45	NA	$29.35	$18.96
RC - 2-Wire Voice Grade Loop with 2-Wire Line Port, Zone 3 (Note 6)	Note 8	$44.44	$25.60	$21.62	#VALUE!	$51.85	$29.75	NA	$37.68	$26.31
RC - 2-Wire Voice Grade Loop with 2-Wire Line Port, Zone 4 (Note 6)	Note 8	NA	NA	NA	NA	NA	$38.59	NA	NA	NA
All available features, per month	UEPVF	$2.64	$3.40	$0.00	$3.39	$3.08	$3.21	$3.04	$3.04	$0.00
Nonrecurring Charges										
NRC - 2-Wire Voice Grade Loop/Line Port Combination - 1st, Switch as i	USAC2	$2.80	$15.82	$2.01	$10.00	$3.80	$5.20	$2.77	$1.59	$1.03
NRC - 2-Wire Voice Grade Loop/Line Port Combination - Add'l, Switch as i	USAC2	$0.41	$3.80	$0.3108	$10.00	$0.29	$0.41	$0.40	$0.40	$0.2886
NRC - 2-Wire Voice Grade Loop/Line Port Combination - 1st, Switch with chang	USACC	$2.80	$15.82	$2.01	$10.00	$3.80	$5.20	$2.77	$1.59	$1.03
NRC - 2-Wire Voice Grade Loop/Line Port Combination - Add'l, Switch with change	USACC	$0.41	$3.80	$0.3108	$10.00	$0.29	$0.41	$0.40	$0.40	$0.2886
NRC - 2-Wire Voice Grade Loop/Line Port Combination - Subsequer	USAS2	$10.00	$10.00	$10.00	$10.00	$10.00	$10.00	$10.00	$10.00	$10.00
NRC - 2-Wire Voice Grade Loop/Line Port Combination - OSS LSR Charge, Electronic per LSR received from the CLEC by one of the OSS interactive interfaces (Note 7)	SOMEC	$3.50	$2.75	$3.50	$3.50	$3.50	$3.50	$3.50	$3.50	$3.50
NRC - 2-Wire Voice Grade Loop/Line Port Combination - Incremental Cost - Manua Svc.Order vs. Electronic - 1st	SOMAN	$40.71	$21.56	$33.67	$19.99	$31.92	$43.52	$40.18	$43.19	$30.89
NRC - 2-Wire Voice Grade Loop/Line Port Combination - Incremental Cost - Manua Svc.Order vs. Electronic - Add'l	SOMAN	$9.58	$21.56	$7.88	$19.99	$7.32	$0.99	$9.45	$9.91	$7.03
NRC- 2 Wire Voice Grade Loop/Line Port Combination - Subsequent Database Update Electronic		$1.44	TBD	TBD	TBD	$2.11	$2.87	$1.42	$0.71	$0.76
NRC- 2 Wire Voice Grade Loop/Line Port Combination - Subsequent Database Update Manual Service Order		$8.25	TBD	TBD	TBD	$5.12	$6.88	$10.27	$8.91	$7.97
NRC - Electronic Service Order Disconnec		TBD	$0.42	TBD	TBD	TBD	TBD	TBD	TBD	TBD
NRC - Incremental Manual Service Order Disconnec		$20.00	$3.84	$20.00	$20.00	$20.00	$20.00	$20.00	$20.00	$20.00
NRCs for New (not Currently Combined) as ordered in Georgia										
NRC - 2-Wire Voice Grade Loop with 2-Wire Line Port - New - 1s	UEPRD	NA	NA	$22.14	NA	NA	NA	NA	NA	NA
NRC - 2-Wire Voice Grade Loop with 2-Wire Line Port - New - Adc	UEPRD	NA	NA	$15.25	NA	NA	NA	NA	NA	NA
NRC - 2-Wire Voice Grade Loop with 2-Wire Line Port - New - 1s	UEPPC	NA	NA	$22.14	NA	NA	NA	NA	NA	NA
NRC - 2-Wire Voice Grade Loop with 2-Wire Line Port - New - Adc	UEPPC	NA	NA	$15.25	NA	NA	NA	NA	NA	NA
NRC - 2-Wire Voice Grade Loop with 2-Wire Line Port - New - 1s	UEPPO	NA	NA	$22.14	NA	NA	NA	NA	NA	NA
NRC - 2-Wire Voice Grade Loop with 2-Wire Line Port - New - Adc	UEPPO	NA	NA	$15.25	NA	NA	NA	NA	NA	NA
NRC - 2-Wire Voice Grade Loop with 2-Wire Line Port - New - 1s	UEPP1	NA	NA	$22.14	NA	NA	NA	NA	NA	NA
NRC - 2-Wire Voice Grade Loop with 2-Wire Line Port - New - Adc	UEPP1	NA	NA	$15.25	NA	NA	NA	NA	NA	NA
NRC - 2-Wire Voice Grade Loop with 2-Wire Line Port - New - 1s	UEPLD	NA	NA	$22.14	NA	NA	NA	NA	NA	NA
NRC - 2-Wire Voice Grade Loop with 2-Wire Line Port - New - Adc	UEPLD	NA	NA	$15.25	NA	NA	NA	NA	NA	NA
NRC - 2-Wire Voice Grade Loop with 2-Wire Line Port - New - 1s	UEPXA	NA	NA	$22.14	NA	NA	NA	NA	NA	NA
NRC - 2-Wire Voice Grade Loop with 2-Wire Line Port - New - Adc	UEPXA	NA	NA	$15.25	NA	NA	NA	NA	NA	NA
NRC - 2-Wire Voice Grade Loop with 2-Wire Line Port - New - 1st	UEPXB	NA	NA	$22.14	NA	NA	NA	NA	NA	NA
NRC - 2-Wire Voice Grade Loop with 2-Wire Line Port - New - Add'l	UEPXB	NA	NA	$15.25	NA	NA	NA	NA	NA	NA
NRC - 2-Wire Voice Grade Loop with 2-Wire Line Port - New - 1s	UEPXC	NA	NA	$22.14	NA	NA	NA	NA	NA	NA
NRC - 2-Wire Voice Grade Loop with 2-Wire Line Port - New - Adc	UEPXC	NA	NA	$15.25	NA	NA	NA	NA	NA	NA
NRC - 2-Wire Voice Grade Loop with 2-Wire Line Port - New - 1s	UEPXD	NA	NA	$22.14	NA	NA	NA	NA	NA	NA
NRC - 2-Wire Voice Grade Loop with 2-Wire Line Port - New - Adc	UEPXD	NA	NA	$15.25	NA	NA	NA	NA	NA	NA
NRC - 2-Wire Voice Grade Loop with 2-Wire Line Port - New - 1s	UEPXE	NA	NA	$22.14	NA	NA	NA	NA	NA	NA
NRC - 2-Wire Voice Grade Loop with 2-Wire Line Port - New - Adc	UEPXE	NA	NA	$15.25	NA	NA	NA	NA	NA	NA
NRC - 2-Wire Voice Grade Loop with 2-Wire Line Port - New - 1s	UEPXL	NA	NA	$22.14	NA	NA	NA	NA	NA	NA
NRC - 2-Wire Voice Grade Loop with 2-Wire Line Port - New - Adc	UEPXL	NA	NA	$15.25	NA	NA	NA	NA	NA	NA

BELLSOUTH/ACCESS INTEGRATED RATES
NETWORK ELEMENTS
AND OTHER SERVICES
LOOP/PORT COMBINATIONS

DESCRIPTION	USOC	AL	FL	GA	KY	LA	MS	NC	SC	TN
NRC - 2-Wire Voice Grade Loop with 2-Wire Line Port - New - 1	UEPXM	NA	NA	$22.14	NA	NA	NA	NA	NA	NA
NRC - 2-Wire Voice Grade Loop with 2-Wire Line Port - New - Add'l	UEPXM	NA	NA	$15.25	NA	NA	NA	NA	NA	NA
NRC - 2-Wire Voice Grade Loop with 2-Wire Line Port - New - 1	UEPXO	NA	NA	$22.14	NA	NA	NA	NA	NA	NA
NRC - 2-Wire Voice Grade Loop with 2-Wire Line Port - New - Adc	UEPXO	NA	NA	$15.25	NA	NA	NA	NA	NA	NA
NRC - 2-Wire Voice Grade Loop with 2-Wire Line Port - New - 1	UEPXS	NA	NA	$22.14	NA	NA	NA	NA	NA	NA
NRC - 2-Wire Voice Grade Loop with 2-Wire Line Port - New - Adc	UEPXS	NA	NA	$15.25	NA	NA	NA	NA	NA	NA
NRC - 2-Wire Voice Grade Loop/Line Port Combination - Subsequer	USAS2	NA	NA	$10.00	NA	NA	NA	NA	NA	NA
NRC - 2-Wire Voice Grade Loop with 2-Wire Line Port - New - Disconnect - 1		NA	NA	$8.45	NA	NA	NA	NA	NA	NA
NRC - 2-Wire Voice Grade Loop with 2-Wire Line Port - New - Disconnect - Adc		NA	NA	$3.91	NA	NA	NA	NA	NA	NA
NRC - 2-Wire Voice Grade Loop/Line Port Combination - OSS LSR Charge, Electronic per LSR received from the CLEC by one of the OSS interactive interfaces (Note 7)	SOMEC	NA	NA	$3.50	NA	NA	NA	NA	NA	NA
NRC - 2-Wire Voice Grade Loop with 2-Wire Line Port - Incremental Cost Manual vs Electronic - New - 1st		NA	NA	$37.06	NA	NA	NA	NA	NA	NA
NRC - 2-Wire Voice Grade Loop with 2-Wire Line Port - Incremental Cost Manual vs Electronic - New - Add'l		NA	NA	$8.19	NA	NA	NA	NA	NA	NA
NRC- 2 Wire Voice Grade Loop/Line Port Combination - Subsequent Database Update Electronic		NA	NA	TBD	NA	NA	NA	NA	NA	NA
NRC- 2 Wire Voice Grade Loop/Line Port Combination - Subsequent Database Update Manual Service Order		NA	NA	TBD	NA	NA	NA	NA	NA	NA
NRC - 2-Wire Voice Grade Loop with 2-Wire Line Port - Incremental Cost Manual vs Electronic - New - Disconnect		NA	NA	$11.17	NA	NA	NA	NA	NA	NA
All Other Loop/Port Combinations		TBD	TBD	Note 2	TBD	TBD	TBD	TBD	TBD	TBD
LOCAL NUMBER PORTABILITY (REQUIRES ONE PER PORT	LNPCX									

NOTES:

Interim rates subject to true-up

1 Market Rates will apply in those areas where BellSouth is not required to provide circu switching pursuant to FCC rules.

2 In Georgia, rates will apply for Currently Combined as well as not Currently Combine loop/port combinations unless otherwise identified.

3 In the absence of ordered rates by a State Commission, the recurring rates fo Currently Combined combinations of loop/port network elements will be the sum of the recurring rates for the UNEs which make up the combinations, and the nonrecurring rates shall be as set forth in this section.

4 End Office and Tandem Switching Usage and Common Transport Usage rates in the Port section of this rate exhibit shall apply to all combinations of loop/port network elements.

5 Deleted

6 Geographically Deaveraged UNE Zones and applicable rates have been established for certain services, as shown in this Agreement. Where Geographically Deaveraged UNE Zones and applicable rates are established, Statewide rates are obsolete. Further, BellSouth is in the process of enhancing its billing systems in order to accomodate this Geographically Deaveraged UNE Zone Rate Structure. Until these enhancements are accomplished, estimated to be mid 2001, the UNE Zone 1 rate will be billed for all services residing in Zones 1, 2, 3 or 4, i.e., Rates for services residing i UNE Zones 2, 3 and UNE Zone 4, where applicable, will not be billed. Once billing enhancements are complete, all applicable UNE Zone rates reflected in this Agreement will be billed. Reference Internet Website http://www.interconnection.bellsouth.com/become_clec/docs/interconnection/deavuzns.pdf to view Geographically Deaveraged UNE Zone Designations by Central Office

BELLSOUTH/ACCESS INTEGRATED RATES
NETWORK ELEMENTS
AND OTHER SERVICES
LOOP/PORT COMBINATIONS

	DESCRIPTION	USOC	AL	FL	GA	KY	LA	MS	NC	SC	TN
7	In the absence of ordered OSS rates by a state commission, BellSouth will offer regionwide rates										
8	There is not a unique combination USOC. CLEC should submit the loop and port USOCs.										
9	Rates in TN and FL are interim and shall be trued-up when final rates are ordered.										

AMENDMENT TO
INTERCONNECTION AGREEMENT BETWEEN
BELLSOUTH TELECOMMUNICATIONS, INC.
AND ACCESS INTEGRATED NETWORKS, INC.
DATED FEBRUARY 17, 2000

This Agreement (the "Amendment") is made and entered into between BellSouth Telecommunications, Inc. ("BellSouth") a Georgia corporation, and ACCESS Integrated Networks, Inc. ("ACCESS Integrated") a Georgia corporation.

WHEREAS, The Parties desire to amend that certain Interconnection Agreement between BellSouth and ACCESS Integrated dated February 17, 2000 (the "Interconnection Agreement") in order to incorporate rates established by the Florida Public Service Commission ("PSC") in Docket Number 990649-TP, on May 25, 2001;

NOW THEREFORE, in consideration of the mutual provisions contained herein and other good and valuable consideration, the receipt and sufficiency of which are hereby acknowledged, BellSouth and ACCESS Integrated hereby covenant and agree as follows:

1. Those permanent rates established by the Florida PSC in Docket No. 990649-TP for certain Unbundled Network Elements and Local Interconnection in Florida are as set forth in Exhibit 1 attached hereto and incorporated herein by this reference.

2. All rate elements and rates in Attachments 1, 2, 3, 5 and 7 for Florida are hereby deleted and replaced in their entirety with the corresponding rates and rate elements in Exhibit 1.

3. The Parties agree that all of the other provisions of the Interconnection Agreement, dated February 17, 2000, shall remain in full force and effect.

4. The Parties further agree that either or both of the Parties is authorized to submit this Amendment to the Florida Public Service Commission or other regulatory body having jurisdiction over the subject matter of this Amendment, for approval subject to Section 252(e) of the federal Telecommunications Act of 1996.

This Amendment is made effective upon the date that it is signed by both Parties.

IN WITNESS WHEREOF, the parties hereto have caused this Amendment to be executed by their respective duly authorized representatives on the data indicated below.

_____	_____
BellSouth Telecommunications, Inc.	**ACCESS Integrated Networks, Inc.**
By: _____	By: _____
Title: _____	Title: _____
Date: _____	Date: _____

RESALE RATES

	FLORIDA
ODUF/EODUF/CMDS RATE	
ENHANCED OPTION DAILY USAGE FILE (EODUF)	
EODUF: Message Processing, per message	$0.222451
OPTIONAL DAILY USAGE FILE (ODUF)	
ODUF: Recording, per message	$0.0000068
ODUF: Message Processing, per message	$0.006614
ODUF: Message Processing, per Magnetic Tape provisioned	$48.77
ODUF: Data Transmission (CONNECT:DIRECT), per msg	$0.00010772

CATEGORY	NOTES	UNBUNDLED NETWORK ELEMENT	Interim	Zone	BCS	USOC	RATES ($)					OSS RATES ($)					
												Svc Order Submitted Elec per LSR	Svc Order Submitted Manually per LSR	Incremental Charge - Manual Svc Order vs. Electronic-1st	Incremental Charge - Manual Svc Order vs. Electronic-Add'l	Incremental Charge - Manual Svc Order vs. Electronic-Disc 1st	Incremental Charge - Manual Svc Order vs. Electronic-Disc Add'l
								Nonrecurring		Nonrecurring							
										Disconnect							
							Rec	First	Add'l	First	Add'l	SOMEC	SOMAN	SOMAN	SOMAN	SOMAN	SOMAN
	The "Zone" shown in the sections for stand-alone loops or loops as part of a combination refers to Geographically Deaveraged UNE Zones. To view Geographically Deaveraged UNE Zone Designations by Central Office, refer to Internet Website: http://www.interconnection.bellsouth.com/become_a_clec/html/interconnection.htm																
UNBUNDLED EXCHANGE ACCESS LOOP																	
	2-WIRE ANALOG VOICE GRADE LOOP																
		2-Wire Analog Voice Grade Loop - Service Level 1- Zone		1	UEANL	UEAL2	11.74	44.68	20.57	23.1	5.92		10.73			1.65	
		2-Wire Analog Voice Grade Loop - Service Level 1- Zone		2	UEANL	UEAL2	16.26	44.68	20.57	23.1	5.92		10.73			1.65	
		2-Wire Analog Voice Grade Loop - Service Level 1- Zone		3	UEANL	UEAL2	30.75	44.68	20.57	23.1	5.92		10.73			1.65	
		2 Wire Analog Voice Grade Loop-Service Level 1-Line Splitting- Zone		1	UEPSR, UEPSB	UEALS	11.74	44.68	20.57	23.1	5.92		10.73			1.65	
		2 Wire Analog Voice Grade Loop- Service Level 1-Line Splitting-Zone		2	UEPSR, UEPSB	UEALS	16.26	44.68	20.57	23.1	5.92		10.73				
		2 Wire Analog Voice Grade Loop-Service Level 1-Line Splitting-Zone		3	UEPSR, UEPSB	UEALS	30.75	44.68	20.57	23.1	5.92		10.73			1.65	
		Engineering Information Document (E			UEANL			28.77	28.77								
		Manual Order Coordination for UVL-SL1s (per loop			UEANL	UEAMC		8.12	8.12								
		Order Coordination for Specified Conversion Time for UVL-SL1 (per LSR			UEANL	OCOSL		20.75	20.75								
		2-Wire Analog Voice Grade Loop - Service Level 2 w/Loop or Ground Start Signali Zone 1		1	UEA	UEAL2	13.43	122.38	74.35	57.28	10.83		10.73			1.65	
		2-Wire Analog Voice Grade Loop - Service Level 2 w/Loop or Ground Start Signali Zone 2		2	UEA	UEAL2	18.6	122.38	74.35	57.28	10.83		10.73			1.65	
		2-Wire Analog Voice Grade Loop - Service Level 2 w/Loop or Ground Start Signali Zone 3		3	UEA	UEAL2	35.18	122.38	74.35	57.28	10.83		10.73			1.65	
		Order Coordination for Specified Conversion Time (per LS			UEA	OCOSL		20.75									
		2-Wire Analog Voice Grade Loop - Service Level 2 w/Reverse Battery Signaling - Zone 1		1	UEA	UEAR2	13.43	122.38	74.35	57.28	10.83		10.73			1.65	
		2-Wire Analog Voice Grade Loop - Service Level 2 w/Reverse Battery Signaling - Zone 2		2	UEA	UEAR2	18.6	122.38	74.35	57.28	10.83		10.73			1.65	
		2-Wire Analog Voice Grade Loop - Service Level 2 w/Reverse Battery Signaling - Zone 3		3	UEA	UEAR2	35.18	122.38	74.35	57.28	10.83		10.73			1.65	
		Order Coordination for Specified Conversion Time (per LS			UEA	OCOSL		20.75									
	4-WIRE ANALOG VOICE GRADE LOOP																
		4-Wire Analog Voice Grade Loop - Zone		1	UEA	UEAL4	21.23	151.34	103.82	60.47	14.02		10.73			1.65	
		4-Wire Analog Voice Grade Loop - Zone		2	UEA	UEAL4	29.41	151.34	103.82	60.47	14.02		10.73			1.65	
		4-Wire Analog Voice Grade Loop - Zone		3	UEA	UEAL4	55.63	151.34	103.82	60.47	14.02		10.73			1.65	
		Order Coordination for Specified Conversion Time (per LS			UEA	OCOSL		20.75									
	2-WIRE ISDN DIGITAL GRADE LOOP																
		2-Wire ISDN Digital Grade Loop - Zone		1	UDN	U1L2X	20.44	133.15	85.12	56.1	9.65		10.73			1.65	
		2-Wire ISDN Digital Grade Loop - Zone		2	UDN	U1L2X	28.31	133.15	85.12	56.1	9.65		10.73			1.65	
		2-Wire ISDN Digital Grade Loop - Zone		3	UDN	U1L2X	53.56	133.15	85.12	56.1	9.65		10.73			1.65	
		Order Coordination For Specified Conversion Time (per LSI			UDN	OCOSL		20.75									
	2-WIRE Universal Digital Channel (UDC) COMPATIBLE LOOP																
		2-Wire Universal Digital Channel (UDC) Compatible Loop - Zone		1	UDC	UDC2X	20.44	133.15	85.12	56.1	9.65		10.73			1.65	
		2-Wire Universal Digital Channel (UDC) Compatible Loop - Zone		2	UDC	UDC2X	28.31	133.15	85.12	56.1	9.65		10.73			1.65	

CATEGORY	NOTES	UNBUNDLED NETWORK ELEMENT	Interim	Zone	BCS	USOC	RATES ($)					OSS RATES ($)					
												Svc Order Submitted Elec per LSR	Svc Order Submitted Manually per LSR	Incremental Charge - Manual Svc Order vs. Electronic-1st	Incremental Charge - Manual Svc Order vs. Electronic-Add'l	Incremental Charge - Manual Svc Order vs. Electronic-Disc 1st	Incremental Charge - Manual Svc Order vs. Electronic-Disc Add'l
								Nonrecurring		Nonrecurring							
										Disconnect							
							Rec	First	Add'l	First	Add'l	SOMEC	SOMAN	SOMAN	SOMAN	SOMAN	SOMAN
		2-Wire Universal Digital Channel (UDC) Compatible Loop - Zone		3	UDC	UDC2X	53.56	133.15	85.12	56.1	9.65		10.73			1.65	
		2-WIRE ASYMMETRICAL DIGITAL SUBSCRIBER LINE (ADSL) COMPATIBLE LOOP															
		2-WIRE ASYMMETRICAL DIGITAL SUBSCRIBER LINE (ADSL) COMPATIBLE LOOP															
		2 Wire Unbundled ADSL Loop including manual service inquiry & facility reservation - Zone 1		1	UAL	UAL2X	11.52	134.8	93.62	67.66	14.09		10.73			1.65	
		2 Wire Unbundled ADSL Loop including manual service inquiry & facility reservation - Zone 2		2	UAL	UAL2X	15.96	134.8	93.62	67.66	14.09		10.73			1.65	
		2 Wire Unbundled ADSL Loop including manual service inquiry & facility reservation - Zone 3		3	UAL	UAL2X	30.19	134.8	93.62	67.66	14.09		10.73			1.65	
		Order Coordination for Specified Conversion Time (per LS			UAL	OCOSL		20.75									
		2 Wire Unbundled ADSL Loop without manual service inquiry & facility reservaton - Zone 1		1	UAL	UAL2W	11.52	112.55	64.12	54.67	8.22		10.73			1.65	
		2 Wire Unbundled ADSL Loop without manual service inquiry & facility reservaton - Zone 2		2	UAL	UAL2W	15.96	112.55	64.12	54.67	8.22		10.73			1.65	
		2 Wire Unbundled ADSL Loop without manual service inquiry & facility reservaton - Zone 3		3	UAL	UAL2W	30.19	112.55	64.12	54.67	8.22		10.73			1.65	
		Order Coordination for Specified Conversion Time (per LS			UAL	OCOSL		20.75									
		2-WIRE HIGH BIT RATE DIGITAL SUBSCRIBER LINE (HDSL) COMPATIBLE LOO															
		2-WIRE HIGH BIT RATE DIGITAL SUBSCRIBER LINE (HDSL) COMPATIBLE LOC															
		2 Wire Unbundled HDSL Loop including manual service inquiry & facility reservation - Zone 1		1	UHL	UHL2X	9.12	143.43	102.25	67.66	14.09		10.73			1.65	
		2 Wire Unbundled HDSL Loop including manual service inquiry & facility reservation - Zone 2		2	UHL	UHL2X	12.63	143.43	102.25	67.66	14.09		10.73			1.65	
		2 Wire Unbundled HDSL Loop including manual service inquiry & facility reservation - Zone 3		3	UHL	UHL2X	23.9	143.43	102.25	67.66	14.09		10.73			1.65	
		Order Coordination for Specified Conversion Tir			UHL	OCOSL		20.75									
		2 Wire Unbundled HDSL Loop without manual service inquiry and facility reservati Zone 1		1	UHL	UHL2W	9.12	121.17	72.75	54.67	8.22		10.73			1.65	
		2 Wire Unbundled HDSL Loop without manual service inquiry and facility reservati Zone 2		2	UHL	UHL2W	12.63	121.17	72.75	54.67	8.22		10.73			1.65	
		2 Wire Unbundled HDSL Loop without manual service inquiry and facility reservati Zone 3		3	UHL	UHL2W	23.9	121.17	72.75	54.67	8.22		10.73			1.65	
		Order Coordination for Specified Conversion Tir			UHL	OCOSL		20.75									
		4-WIRE HIGH BIT RATE DIGITAL SUBSCRIBER LINE (HDSL) COMPATIBLE LOOP															
		4 Wire Unbundled HDSL Loop including manual service inquiry and facility reservation - Zone 1		1	UHL	UHL4X	14.24	174.28	125.3	69.56	11.37		10.73			1.65	
		4-Wire Unbundled HDSL Loop including manual service inquiry and facility reservation - Zone 2		2	UHL	UHL4X	19.72	174.28	125.3	69.56	11.37		10.73			1.65	
		4-Wire Unbundled HDSL Loop including manual service inquiry and facility reservation - Zone 3		3	UHL	UHL4X	37.31	174.28	125.3	69.56	11.37		10.73			1.65	
		Order Coordination for Specified Conversion Tir			UHL	OCOSL		20.75									
		4-Wire Unbundled HDSL Loop without manual service inquiry and facility reservati Zone 1		1	UHL	UHL4W	14.24	152.02	104.11	56.57	10.12		10.73			1.65	
		4-Wire Unbundled HDSL Loop without manual service inquiry and facility reservati Zone 2		2	UHL	UHL4W	19.72	152.02	104.11	56.57	10.12		10.73			1.65	
		4-Wire Unbundled HDSL Loop without manual service inquiry and facility reservati Zone 3		3	UHL	UHL4W	37.31	152.02	104.11	56.57	10.12		10.73			1.65	
		Order Coordination for Specified Conversion Tir			UHL	OCOSL		20.75									

CATEGORY	NOTES	UNBUNDLED NETWORK ELEMENT	Interim	Zone	BCS	USOC	RATES ($)					OSS RATES ($)					
												Svc Order Submitted Elec per LSR	Svc Order Submitted Manually per LSR	Incremental Charge - Manual Svc Order vs. Electronic-1st	Incremental Charge - Manual Svc Order vs. Electronic-Add'l	Incremental Charge - Manual Svc Order vs. Electronic-Disc 1st	Incremental Charge - Manual Svc Order vs. Electronic-Disc Add'l
								Nonrecurring		Nonrecurring							
										Disconnect							
							Rec	First	Add'l	First	Add'l	SOMEC	SOMAN	SOMAN	SOMAN	SOMAN	SOMAN
	4-WIRE DS1 DIGITAL LOOP																
		4-Wire DS1 Digital Loop - Zone 1		1	USL	USLXX	69.22	282.15	163.51	47.4	10.22		10.73			1.65	
		4-Wire DS1 Digital Loop - Zone 2		2	USL	USLXX	95.89	282.15	163.51	47.4	10.22		10.73			1.65	
		4-Wire DS1 Digital Loop - Zone 3		3	USL	USLXX	181.38	282.15	163.51	47.4	10.22		10.73			1.65	
		Order Coordination for Specified Conversion Tim			USL	OCOSL		20.75									
	4-WIRE 19.2, 56 OR 64 KBPS DIGITAL GRADE LOOP																
		4 Wire Unbundled Digital 19.2 Kbps		1	UDL	UDL19	24.48	145.66	98.14	60.47	14.02		10.73			1.65	
		4 Wire Unbundled Digital 19.2 Kbps		2	UDL	UDL19	33.91	145.66	98.14	60.47	14.02		10.73			1.65	
		4 Wire Unbundled Digital 19.2 Kbps		3	UDL	UDL19	64.14	145.66	98.14	60.47	14.02		10.73			1.65	
		4 Wire Unbundled Digital Loop 56 Kbps - Zone 1		1	UDL	UDL56	24.48	145.66	98.14	60.47	14.02		10.73			1.65	
		4 Wire Unbundled Digital Loop 56 Kbps - Zone 2		2	UDL	UDL56	33.91	145.66	98.14	60.47	14.02		10.73			1.65	
		4 Wire Unbundled Digital Loop 56 Kbps - Zone 3		3	UDL	UDL56	64.14	145.66	98.14	60.47	14.02		10.73			1.65	
		Order Coordination for Specified Conversion Tim			UDL	OCOSL		20.75									
		4 Wire Unbundled Digital Loop 64 Kbps - Zone 1		1	UDL	UDL64	24.48	145.66	98.14	60.47	14.02		10.73			1.65	
		4 Wire Unbundled Digital Loop 64 Kbps - Zone 2		2	UDL	UDL64	33.91	145.66	98.14	60.47	14.02		10.73			1.65	
		4 Wire Unbundled Digital Loop 64 Kbps - Zone 3		3	UDL	UDL64	64.14	145.66	98.14	60.47	14.02		10.73			1.65	
		Order Coordination for Specified Conversion Tim			UDL	OCOSL		20.75									
	2-WIRE Unbundled COPPER LOOP																
		2-Wire Unbundled Copper Loop/Short including manual service inquiry & facility reservation - Zone 1		1	UCL	UCLPB	11.52	133.88	92.7	67.66	14.09		10.73			1.65	
		2-Wire Unbundled Copper Loop/Short including manual service inquiry & facility reservation - Zone 2		2	UCL	UCLPB	15.96	133.88	92.7	67.66	14.09		10.73			1.65	
		2 Wire Unbundled Copper Loop/Short including manual service inquiry & facility reservation - Zone 3		3	UCL	UCLPB	30.19	133.88	92.7	67.66	14.09		10.73			1.65	
		Order Coordination for Unbundled Copper Loops (per loo			UCL	UCLMC		8.12	8.12								
		2-Wire Unbundled Copper Loop/Short without manual service inquiry and facility reservation - Zone 1		1	UCL	UCLPW	11.52	111.62	63.19	54.67	8.22		10.73			1.65	
		2-Wire Unbundled Copper Loop/Short without manual service inquiry and facility reservation - Zone 2		2	UCL	UCLPW	15.96	111.62	63.19	54.67	8.22		10.73			1.65	
		2-Wire Unbundled Copper Loop/Short without manual service inquiry and facility reservation - Zone 3		3	UCL	UCLPW	30.19	111.62	63.19	54.67	8.22		10.73			1.65	
		Order Coordination for Unbundled Copper Loops (per loop)			UCL	UCLMC		8.12	8.12								
		2-Wire Unbundled Copper Loop/Long - includes manual srvc. inquiry and facility reservation - Zone 1		1	UCL	UCL2L	33.57	133.88	92.7	67.66	14.09		10.73			1.65	
		2-Wire Unbundled Copper Loop/Long - includes manual svc. inquiry and facility reservation - Zone 2		2	UCL	UCL2L	46.5	133.88	92.7	67.66	14.09		10.73			1.65	
		2-Wire Unbundled Copper Loop/Long - includes manual svc. inquiry and facility reservation - Zone 3		3	UCL	UCL2L	87.96	133.88	92.7	67.66	14.09		10.73			1.65	
		Order Coordination for Unbundled Copper Loops (per loop)			UCL	UCLMC		8.12	8.12								
		2-Wire Unbundled Copper Loop/Long - without manual service inquiry and facility reservation - Zone 1		1	UCL	UCL2W	33.57	111.62	63.19	54.67	8.22		10.73			1.65	
		2-Wire Unbundled Copper Loop/Long - without manual service inquiry and facility reservation - Zone 2		2	UCL	UCL2W	46.5	111.62	63.19	54.67	8.22		10.73			1.65	
		2-Wire Unbundled Copper Loop/Long - without manual service inquiry and facility reservation - Zone 3		3	UCL	UCL2W	87.96	111.62	63.19	54.67	8.22		10.73			1.65	
		Order Coordination for Unbundled Copper Loops (per loo			UCL	UCLMC		8.12	8.12								
		2-Wire Unbundled Copper Loop - Non-Designed Zone	I	1	UEQ	UEQ2X	11.01	44.69	22.4	25.65	7.06		10.73			1.65	
		2 Wire Unbundled Copper Loop - Non-Designed - Zone	I	2	UEQ	UEQ2X	12.67	44.69	22.4	25.65	7.06		10.73			1.65	

CATEGORY	NOTES	UNBUNDLED NETWORK ELEMENT	Interim	Zone	BCS	USOC	RATES ($)					OSS RATES ($)					
												Svc Order Submitted Elec per LSR	Svc Order Submitted Manually per LSR	Incremental Charge - Manual Svc Order vs. Electronic-1st	Incremental Charge - Manual Svc Order vs. Electronic-Add'l	Incremental Charge - Manual Svc Order vs. Electronic-Disc 1st	Incremental Charge - Manual Svc Order vs. Electronic-Disc Add'l
								Nonrecurring		Nonrecurring							
										Disconnect							
							Rec	First	Add'l	First	Add'l	SOMEC	SOMAN	SOMAN	SOMAN	SOMAN	SOMAN
		2 Wire Unbundled Copper Loop - Non-Designed - Zone	I	3	UEQ	UEQ2X	20.22	44.69	22.4	25.65	7.06		10.73			1.65	
		Order Coordination 2 Wire Unbundled Copper Loop - Non-Designed (per loc			UEQ	USBMC		8.12	8.12								
		Engineering Information Documer			UEQ			28.77	28.77								
		Loop Testing - Basic 1st Half Hou			UEQ	URET1		78.92	78.92								
		Loop Testing - Basic Additional Half Hol			UEQ	URETA		23.33	23.33								
	4-WIRE COPPER LOOP																
		4-Wire Copper Loop/Short - including manual service inquiry and facility reservation - Zone 1		1	UCL	UCL4S	16.18	160.36	119.69	69.56	15.99		10.73			1.65	
		4-Wire Copper Loop/Short - including manual service inquiry and facility reservation - Zone 2		2	UCL	UCL4S	22.41	160.36	119.69	69.56	15.99		10.73			1.65	
		4-Wire Copper Loop/Short - including manual service inquiry and facility reservation - Zone 3		3	UCL	UCL4S	42.39	160.36	119.69	69.56	15.99		10.73			1.65	
		Order Coordination for Unbundled Copper Loops (per loo			UCL	UCLMC		8.12	8.12								
		4-Wire Copper Loop/Short - without manual service inquiry and facility reservation - Zone 1		1	UCL	UCL4W	16.18	138.1	90.19	56.57	10.12		10.73			1.65	
		4-Wire Copper Loop/Short - without manual service inquiry and facility reservation - Zone 2		2	UCL	UCL4W	22.41	138.1	90.19	56.57	10.12		10.73			1.65	
		4-Wire Copper Loop/Short - without manual service inquiry and facility reservation - Zone 3		3	UCL	UCL4W	42.39	138.1	90.19	56.57	10.12		10.73			1.65	
		Order Coordination for Unbundled Copper Loops (per loo			UCL	UCLMC		8.12	8.12								
		4-Wire Unbundled Copper Loop/Long - includes manual svc. inquiry and facility reservation - Zone 1		1	UCL	UCL4L	57.88	160.36	119.69	69.56	15.99		10.73			1.65	
		4-Wire Unbundled Copper Loop/Long - includes manual svc. inquiry and facility reservation - Zone 2		2	UCL	UCL4L	80.18	160.36	119.69	69.56	15.99		10.73			1.65	
		4-Wire Unbundled Copper Loop/Long - includes manual svc. inquiry and facility reservation - Zone 3		3	UCL	UCL4L	151.67	160.36	119.69	69.56	15.99		10.73			1.65	
		Order Coordination for Unbundled Copper Loops (per loo			UCL	UCLMC		8.12	8.12								
		4-Wire Unbundled Copper Loop/Long - without manual svc. inquiry and facility reservation - Zone 1		1	UCL	UCL4O	57.88	138.1	90.19	56.57	10.12		10.73			1.65	
		4-Wire Unbundled Copper Loop/Long - without manual svc. inquiry and facility reservation - Zone 2		2	UCL	UCL4O	80.18	138.1	90.19	56.57	10.12		10.73			1.65	
		4-Wire Unbundled Copper Loop/Long - without manual svc. inquiry and facility reservation - Zone 3		3	UCL	UCL4O	151.67	138.1	90.19	56.57	10.12		10.73			1.65	
		Order Coordination for Unbundled Copper Loops (per loo			UCL	UCLMC		8.12	8.12								
LOOP MODIFICATION																	
		Unbundled Loop Modification, Removal of Load Coils - 2 Wire pair less than or equal to 18k ft			UAL, UHL, UCL, UEQ, ULS	ULM2L		0	0								
		Unbundled Loop Modification, Removal of Load Coils - 2 wire greater than 18			UCL, ULS	ULM2G		309.32	309.32								
		Unbundled Loop Modification Removal of Load Coils - 4 Wire less than or equal to 18K ft			UHL, UCL	ULM4L		0	0								
		Unbundled Loop Modification Removal of Load Coils - 4 Wire pair greater than 18			UCL	ULM4G		309.32	309.32								
		Unbundled Loop Modification Removal of Bridged Tap Removal, per unbundled lo			UAL, UHL, UCL, UEQ, UEF, ULS	ULMBT		9.48	9.48								
SUB-LOOPS																	
	Sub-Loop Distribution																

CATEGORY	NOTES	UNBUNDLED NETWORK ELEMENT	Interim	Zone	BCS	USOC	RATES ($)					OSS RATES ($)					
												Svc Order Submitted Elec per LSR	Svc Order Submitted Manually per LSR	Incremental Charge - Manual Svc Order vs. Electronic-1st	Incremental Charge - Manual Svc Order vs. Electronic-Add'l	Incremental Charge - Manual Svc Order vs. Electronic-Disc 1st	Incremental Charge - Manual Svc Order vs. Electronic-Disc Add'l
								Nonrecurring		Nonrecurring							
										Disconnect							
							Rec	First	Add'l	First	Add'l	SOMEC	SOMAN	SOMAN	SOMAN	SOMAN	SOMAN
		Sub-Loop - Per Cross Box Location - CLEC Feeder Facility Set-L	I		UEANL	USBSA		467.08	467.08				10.73			1.65	
		Sub-Loop - Per Cross Box Location - Per 25 Pair Panel Set-L	I		UEANL	USBSB		11.27	11.27				10.73			1.65	
		Sub-Loop - Per Building Equipment Room - CLEC Feeder Facility Set-L	I		UEANL	USBSC		152.58	152.58				10.73			1.65	
		Sub-Loop - Per Building Equipment Room - Per 25 Pair Panel Set-L	I		UEANL	USBSD		43.54	43.54				10.73			1.65	
		Sub-Loop Distribution Per 2-Wire Analog Voice Grade Loop - Zone		1	UEANL	USBN2	6.9	54.26	19.64	37.03	4.1		10.73			1.65	
		Sub-Loop Distribution Per 2-Wire Analog Voice Grade Loop - Zone		2	UEANL	USBN2	9.56	54.26	19.64	37.03	4.1		10.73			1.65	
		Sub-Loop Distribution Per 2-Wire Analog Voice Grade Loop - Zone		3	UEANL	USBN2	18.08	54.26	19.64	37.03	4.1		10.73			1.65	
		Order Coordination for Unbundled Sub-Loops, per sub-loop pair			UEANL	USBMC		8.12	8.12								
		Sub-Loop Distribution Per 4-Wire Analog Voice Grade Loop - Zone		1	UEANL	USBN4	7.35	62.05	27.42	37.98	5.05		10.73			1.65	
		Sub-Loop Distribution Per 4-Wire Analog Voice Grade Loop - Zone		2	UEANL	USBN4	10.18	62.05	27.42	37.98	5.05		10.73			1.65	
		Sub-Loop Distribution Per 4-Wire Analog Voice Grade Loop - Zone		3	UEANL	USBN4	19.25	62.05	27.42	37.98	5.05		10.73			1.65	
		Order Coordination for Unbundled Sub-Loops, per sub-loop pair			UEANL	USBMC		8.12	8.12								
		Sub-Loop 2-Wire Intrabuilding Network Cable (INC	I		UEANL	USBR2	3.33	46.74	12.11	37.03	4.1		10.73			1.65	
		Order Coordination for Unbundled Sub-Loops, per sub-loop pair			UEANL	USBMC		8.12	8.12								
		Sub-Loop 4-Wire Intrabuilding Network Cable (INC	I		UEANL	USBR4	6.32	50.41	15.78	37.98	5.05		10.73			1.65	
		Order Coordination for Unbundled Sub-Loops, per sub-loop pair			UEANL	USBMC		8.12	8.12								
		2 Wire Copper Unbundled Sub-Loop Distribution - Zone	I	1	UEF	UCS2X	5.66	54.26	19.64	37.03	4.1		10.73			1.65	
		2 Wire Copper Unbundled Sub-Loop Distribution - Zone	I	2	UEF	UCS2X	7.83	54.26	19.64	37.03	4.1		10.73			1.65	
		2 Wire Copper Unbundled Sub-Loop Distribution - Zone	I	3	UEF	UCS2X	14.82	54.26	19.64	37.03	4.1		10.73			1.65	
		Order Coordination for Unbundled Sub-Loops, per sub-loop pair			UEF	USBMC		23.24	23.24								
		4 Wire Copper Unbundled Sub-Loop Distribution - Zone	I	1	UEF	UCS4X	4.72	62.05	27.42	37.98	5.05		10.73			1.65	
		4 Wire Copper Unbundled Sub-Loop Distribution - Zone	I	2	UEF	UCS4X	6.53	62.05	27.42	37.98	5.05		10.73			1.65	
		4 Wire Copper Unbundled Sub-Loop Distribution - Zone	I	3	UEF	UCS4X	12.36	62.05	27.42	37.98	5.05		10.73			1.65	
		Order Coordination for Unbundled Sub-Loops, per sub-loop pair			UEF	USBMC		8.12	8.12								
	Sub-Loop Feeder																
		USL-Feeder, DS0 Set-up per Cross Box location - CLEC Distribution Facility set-			UEA, UDN,UCL,UDL,UDC	USBFW		467.08									
		USL Feeder - DS0 Set-up per Cross Box location - per 25 pair set-u			UEA, UDN,UCL,UDL,UDC	USBFX		45.28	45.28								
		USL Feeder DS1 Set-up at DSX location, per DS1 terminatic			USL	USBFZ		522.41	11.32								
		Unbundled Sub-Loop Feeder Loop, 2 Wire Ground Start, Voice Grade - Zone		1	UEA	USBFA	7.6	83.62	46.2	45.57	10.19		10.73			1.65	
		Unbundled Sub-Loop Feeder Loop, 2 Wire Ground-Start, Voice Grade - Zone		2	UEA	USBFA	10.53	83.62	46.2	45.57	10.19		10.73			1.65	
		Unbundled Sub-Loop Feeder Loop, Per 2 Wire Ground-Start, Voice Grade - Zone		3	UEA	USBFA	19.92	83.62	46.2	45.57	10.19		10.73			1.65	
		Order Coordination for Specified Conversion Time, per LSR			UEA	OCOSL		20.75									
		Unbundlde Sub-Loop Feeder Loop, 2 Wire Loop-Start, Voice Grade - Zone		1	UEA	USBFB	7.6	83.62	46.2	45.57	10.19		10.73			1.65	
		Unbundled Sub-Loop Feeder Loop, 2 Wire Loop-Start, Voice Grade - Zone		2	UEA	USBFB	10.53	83.62	46.2	45.57	10.19		10.73			1.65	
		Unbundled Sub-Loop Feeder Loop, 2 Wire Start Loop, Voice Grade - Zone		3	UEA	USBFB	19.92	83.62	46.2	45.57	10.19		10.73			1.65	
		Order Coordination for Specified Time Conversion, per LSR			UEA	OCOSL		20.75									
		Unbundled Sub-Loop Feeder Loop, 2 Wire Reverse Battery, Voice Grade - Zone		1	UEA	USBFC	7.6	83.62	46.2	45.57	10.19		10.73			1.65	
		Unbundled Sub-Loop Feeder Loop, 2 Wire Reverse Battery, Voice Grade - Zone		2	UEA	USBFC	10.53	83.62	46.2	45.57	10.19		10.73			1.65	
		Unbundled Sub-Loop Feeder Loop, 2 Wire Analog Reverse Battery, Voice Grade - Zone 3		3	UEA	USBFC	19.92	83.62	46.2	45.57	10.19		10.73			1.65	
		Order Coordination For Specified Conversion Time, per LS			UEA	OCOSL		20.75									
		Unbundled Sub-Loop Feeder Loop, 4 Wire Ground-Start, Voice Grade - Zone		1	UEA	USBFD	16.05	96.4	58.12	48.55	11.33		10.73			1.65	
		Unbundled Sub-Loop Feeder Loop, 4 Wire Ground-Start, Voice Grade - Zone		2	UEA	USBFD	22.23	96.4	58.12	48.55	11.33		10.73			1.65	
		Unbundled Sub-Loop Feeder Loop, 4 Wire Ground Start, Voice Grade - Zone		3	UEA	USBFD	42.06	96.4	58.12	48.55	11.33		10.73			1.65	
		Order Coordination For Specified Conversion Time, Per LS			UEA	OCOSL		20.75									
		Unbundled Sub-Loop Feeder Loop, 4 Wire Loop-Start, Voice Grade - Zone		1	UEA	USBFE	16.05	96.4	58.12	48.55	11.33		10.73			1.65	
		Unbundled Sub-Loop Feeder Loop, 4 Wire Loop-Start, Voice Grade - Zone		2	UEA	USBFE	22.23	96.4	58.12	48.55	11.33		10.73			1.65	

CATEGORY	NOTES	UNBUNDLED NETWORK ELEMENT	Interim	Zone	BCS	USOC	RATES ($)					OSS RATES ($)					
												Svc Order Submitted Elec per LSR	Svc Order Submitted Manually per LSR	Incremental Charge - Manual Svc Order vs. Electronic-1st	Incremental Charge - Manual Svc Order vs. Electronic-Add'l	Incremental Charge - Manual Svc Order vs. Electronic-Disc 1st	Incremental Charge - Manual Svc Order vs. Electronic-Disc Add'l
								Nonrecurring		Nonrecurring							
										Disconnect							
							Rec	First	Add'l	First	Add'l	SOMEC	SOMAN	SOMAN	SOMAN	SOMAN	SOMAN
		Unbundled Sub-Loop Feeder Loop, 4 Wire Loop-Start, Voice Grade - Zone		3	UEA	USBFE	42.06	96.4	58.12	48.55	11.33		10.73			1.65	
		Order Coordination For Specified Conversion Time, Per LS			UEA	OCOSL		20.75									
		Unbundled Sub-Loop Feeder Loop, 2 Wire ISDN BRI - Zone		1	UDN	USBFF	16.18	98.91	60.12	46.95	9.74		10.73			1.65	
		Unbundled Sub-Loop Feeder Loop, 2-Wire ISDN BRI - Zone		2	UDN	USBFF	22.41	98.91	60.12	46.95	9.74		10.73			1.65	
		Unbundled Sub-Loop Feeder Loop, 2-Wire ISDN BRI - Zone		3	UDN	USBFF	42.39	98.91	60.12	46.95	9.74		10.73			1.65	
		Order Coordination For Specified Conversion Time, Per LS			UDN	OCOSL		20.75									
		Unbundled Sub-Loop Feeder, 2 Wire UDC (IDSL compatibl		1	UDC	USBFS	16.18	98.91	60.12	46.95	9.74		10.73			1.65	
		Unbundled Sub-Loop Feeder, 2 Wire UDC (IDSL compatibl		2	UDC	USBFS	22.41	98.91	60.12	46.95	9.74		10.73			1.65	
		Unbundled Sub-Loop Feeder, 2 Wire UDC (IDSL compatibl		3	UDC	USBFS	42.39	98.91	60.12	46.95	9.74		10.73			1.65	
		Unbundled Sub-Loop Feeder Loop, 4-Wire DS1 - Zone		1	USL	USBFG	43.64	120.61	70.34	65.07	16.2		10.73			1.65	
		Unbundled Sub-Loop Feeder Loop, 4-Wire DS1 - Zone		2	USL	USBFG	60.45	120.61	70.34	65.07	16.2		10.73			1.65	
		Unbundled Sub-Loop Feeder Loop, 4-Wire DS1 - Zone		3	USL	USBFG	114.36	120.61	70.34	65.07	16.2		10.73			1.65	
		Order Coordination For Specified Conversion Time, Per LS			USL	OCOSL		20.75									
		Unbundled Sub-Loop Feeder, 2-Wire Copper Loop - Zone		1	UCL	USBFH	6.65	76.87	38.08	45.64	8.43		10.73			1.65	
		Unbundled Sub-Loop Feeder Loop, 2-Wire Copper Loop - Zone		2	UCL	USBFH	9.22	76.87	38.08	45.64	8.43		10.73			1.65	
		Unbundled Sub-Loop Feeder Loop, 2-Wire Copper Loop - Zone		3	UCL	USBFH	17.44	76.87	38.08	45.64	8.43		10.73			1.65	
		Order Coordination For Specified Conversion Time, per LS			UCL	OCOSL		20.75									
		Sub-Loop Feeder - Per 4-Wire Copper Loop - Zone		1	UCL	USBFJ	12.76	89.85	51.57	46.59	9.38		10.73			1.65	
		Sub-Loop Feeder - Per 4-Wire Copper Loop - Zone		2	UCL	USBFJ	17.67	89.85	51.57	46.59	9.38		10.73			1.65	
		Sub-Loop Feeder - Per 4-Wire Copper Loop - Zone		3	UCL	USBFJ	33.43	89.85	51.57	46.59	9.38		10.73			1.65	
		Order Coordination For Specified Conversion Time, per LS			UCL	OCOSL		20.75									
		Sub-Loop Feeder - Per 4-Wire 19.2 Kbps Digital Grade Loo		1	UDL	USBFN	17.52	90.72	52.43	48.55	11.33		10.73			1.65	
		Sub-Loop Feeder - Per 4-Wire 19.2 Kbps Digital Grade Loo		2	UDL	USBFN	24.28	90.72	52.43	48.55	11.33		10.73			1.65	
		Sub-Loop Feeder - Per 4-Wire 19.2 Kbps Digital Grade Loo		3	UDL	USBFN	45.92	90.72	52.43	48.55	11.33		10.73			1.65	
		Sub-Loop Feeder - Per 4-Wire 56 Kbps Digital Grade Loop - Zone		1	UDL	USBFO	17.52	90.72	52.43	48.55	11.33		10.73			1.65	
		Sub-Loop Feeder - Per 4-Wire 56 Kbps Digital Grade Loop - Zone		2	UDL	USBFO	24.28	90.72	52.43	48.55	11.33		10.73			1.65	
		Sub-Loop Feeder - Per 4-Wire 56 Kbps Digital Grade Loop - Zone		3	UDL	USBFO	45.92	90.72	52.43	48.55	11.33		10.73			1.65	
		Order Coordination For Specified Time Conversion, per LS			UDL	OCOSL		20.75									
		Sub-Loop Feeder - Per 4-Wire 64 Kbps Digital Grade Loop - Zone		1	UDL	USBFP	17.52	90.72	52.43	48.55	11.33		10.73			1.65	
		Sub-Loop Feeder - Per 4-Wire 64 Kbps Digital Grade Loop - Zone		2	UDL	USBFP	24.28	90.72	52.43	48.55	11.33		10.73			1.65	
		Sub-Loop Feeder - Per 4-Wire 64 Kbps Digital Grade Loop - Zone		3	UDL	USBFP	45.92	90.72	52.43	48.55	11.33		10.73			1.65	
		Order Coordination For Specified Conversion Time, per LS			UDL	OCOSL		20.75									
	Unbundled Sub-Loop Modification																
		Unbundled Sub-Loop Modification - 2-W Copper Dist Load Coil/Equip Removal per 2-W PR			UEF	ULM2X		9.11	9.11				10.73			1.65	
		Unbundled Sub-loop Modification - 4-W Copper Dist Load Coil/Equip Removal per 4-W PR			UEF	ULM4X		9.11	9.11				10.73			1.65	
		Unbundled Sub-loop Modification - 2-w/4-w Copper Dist Bridged Tap Removal, per PR unloaded			UEF	ULM4T		14.05	14.05				10.73			1.65	
	Unbundled Network Terminating Wire (UNTW)																
		Unbundled Network Terminating Wire (UNTW) per Pa			UENTW	UENPP	0.3682	21.85	21.85				10.73			1.65	
	Network Interface Device (NID)																
		Network Interface Device (NID) - 1-2 line			UENTW	UND12		63.72	40.94				10.73			1.65	
		Network Interface Device (NID) - 1-6 line			UENTW	UND16		105.96	83.17				10.73			1.65	
		Network Interface Device Cross Connect - 2 W			UENTW	UNDC2		7.12	7.12				10.73			1.65	
		Network Interface Device Cross Connect - 4W			UENTW	UNDC4		7.12	7.12				10.73			1.65	

CATEGORY	NOTES	UNBUNDLED NETWORK ELEMENT	Interim	Zone	BCS	USOC	RATES ($)					OSS RATES ($)					
												Svc Order Submitted Elec per LSR	Svc Order Submitted Manually per LSR	Incremental Charge - Manual Svc Order vs. Electronic-1st	Incremental Charge - Manual Svc Order vs. Electronic-Add'l	Incremental Charge - Manual Svc Order vs. Electronic-Disc 1st	Incremental Charge - Manual Svc Order vs. Electronic-Disc Add'l
								Nonrecurring		Nonrecurring							
										Disconnect							
							Rec	First	Add'l	First	Add'l	SOMEC	SOMAN	SOMAN	SOMAN	SOMAN	SOMAN
UNBUNDLED LOOP CONCENTRATION																	
		Unbundled Loop Concentration - System A (TR00(			ULC	UCT8A	461.86	324.01	324.01				10.73			1.65	
		Unbundled Loop Concentration - System B (TR00(			ULC	UCT8B	54.91	135	135				10.73			1.65	
		Unbundled Loop Concentration - System A (TR30:			ULC	UCT3A	500.74	324.01	324.01				10.73			1.65	
		Unbundled Loop Concentration - System B (TR30:			ULC	UCT3B	92.53	135	135				10.73			1.65	
		Unbundled Loop Concentration - DS1 Loop Interface Ca			ULC	UCTCO	5.18	64.65	46.45	16.67	4.35		10.73			1.65	
		Unbundled Loop Concentration - ISDN Loop Interface (Brite Car			UDN	ULCC1	8.22	14.96	14.88	6.11	6.07		10.73			1.65	
		Unbundled Loop Concentration - UDC Loop Interface (Brite Car			UDC	ULCCU	8.22	14.96	14.88	6.11	6.07		10.73			1.65	
		Unbundled Loop Concentration - -2 Wire Voice-Loop Start or Ground Start Loop Interface (POTS Card			UEA	ULCC2	2.06	14.96	14.88	6.11	6.07		10.73			1.65	
		Unbundled Loop Concentration - 2 Wire Voice - Reverse Battery Loop Interface (SPOTS Card)			UEA	ULCCR	12.22	14.96	14.88	6.11	6.07		10.73			19.99	
		Unbundled Loop Concentration - 4 Wire Voice Loop Interface (Specials Ca			UEA	ULCC4	7.29	14.96	14.89	6.11	6.07		10.73			1.65	
		Unbundled Loop Concentration - TEST CIRCUIT Ca			ULC	UCTTC	35.63	14.96	14.88	6.11	6.07		10.73			1.65	
		Unbundled Loop Concentration - Digital 19.2 Kbps Data Loop Interfa			UDL	ULCC7	10.8	14.96	14.88	6.11	6.07		10.73			1.65	
		Unbundled Loop Concentration - Digital 56 Kbps Data Loop Interfa			UDL	ULCC5	10.8	14.96	14.88	6.11	6.07		10.73			1.65	
		Unbundled Loop Concentration - Digital 64 Kbps Data Loop Interfa			UDL	ULCC6	10.8	14.96	14.88	6.11	6.07		10.73			1.65	
UNBUNDLED SUB-LOOP CONCENTRATION (OUTSIDE CO)																	
UNE OTHER, PROVISIONING ONLY - NO RATE																	
		NID - Dispatch and Service Order for NID installation			UENTW	UNDBX											
		UNTW Circuit Id Establishment, Provisioning Only - No Rate			UENTW	UENCE											
		Unbundled Contract Name, Provisioning Only - No Rate			UEANL, UEF,UEQ,UENTW	UNECN											
		Unbundled Contact Name, Provisioning Only - no rate			UAL,UCL,UDC, UDL,UDN,UEA, UHL,ULC	UNECN	0	0									
		Unbundled Sub-Loop Feeder-2 Wire Cross Box Jumper - no ra			UEA,UDN,UCL, UDC	USBFQ	0	0									
		Unbundled Sub-Loop Feeder-4 Wire Cross Box Jumper - no ra			UEA,USL,UCL,UDL	USBFR	0	0									
		Unbundled DS1 Loop - Superframe Format Option - no ral			USL	CCOSF	0	0									
		Unbundled DS1 Loop - Expanded Superframe Format option - no ra			USL	CCOEF	0	0									
HIGH CAPACITY UNBUNDLED LOCAL LOOP																	
	NOTE: 4 month minimum billing period																
		High Capacity Unbundled Local Loop - DS3 - Per Mile per mon			UE3	1L5ND	10.06										
		High Capacity Unbundled Local Loop - DS3 - Facility Termination per mo			UE3	UE3PX	387.1	501.59	309.24	125.43	87.3		10.73			1.65	
		High Capacity Unbundled Local Loop - STS-1 - Per Mile per mon			UDLSX	1L5ND	10.06										
		High Capacity Unbundled Local Loop - STS-1 - Facility Termination per mo			UDLSX	UDLS1	426.68	501.59	309.24	125.43	87.3		10.73			1.65	
LOOP MAKE-UP																	

CATEGORY	NOTES	UNBUNDLED NETWORK ELEMENT	Interim	Zone	BCS	USOC	RATES ($)					OSS RATES ($)					
												Svc Order Submitted Elec per LSR	Svc Order Submitted Manually per LSR	Incremental Charge - Manual Svc Order vs. Electronic-1st	Incremental Charge - Manual Svc Order vs. Electronic-Add'l	Incremental Charge - Manual Svc Order vs. Electronic-Disc 1st	Incremental Charge - Manual Svc Order vs. Electronic-Disc Add'l
								Nonrecurring		Nonrecurring							
										Disconnect							
							Rec	First	Add'l	First	Add'l	SOMEC	SOMAN	SOMAN	SOMAN	SOMAN	SOMAN
		Loop Makeup - Preordering Without Reservation, per working or spare facility queried (Manual).			UMK	UMKLW		43.1	43.1								
		Loop Makeup - Preordering With Reservation, per spare facility queried (Manual).			UMK	UMKLP		45.72	45.72								
		Loop Makeup--With or Without Reservation, per working or spare facility queried (Mechanized)			UMK	PSUMK	0.6757										
LINE SHARING																	
		Line Sharing Splitter, per System 96 Line Capaci	I		ULS	ULSDA	100	150	0	150	0		0				
		Line Sharing Splitter, per System 24 Line Capaci	I		ULS	ULSDB	25	150	0	150	0		0				
		Line Sharing Splitte, Per System, 8 Line Capaci	I		ULS	ULSD8	8.33	150	0	150	0		0				
		Line Sharing - per Line Activatio	I		ULS	ULSDC	0.61	40	22				10.73			1.65	
		Line Sharing - per Subsequent Activity per Line Rearrangeme	I		ULS	ULSDS		30	15				10.73			1.65	
UNBUNDLED TRANSPORT																	
	COMMON TRANSPORT (Shared)																
		Common Transport - Per Mile, Per MO(					0.0000039										
		Common Transport - Facilities Termination Per MO					0.0004579										
	NOTE: INTEROFFICE CHANNEL - DEDICATED TRANSPORT - minimum billing period: below DS3 = one month, DS3 and above four months																
	INTEROFFICE CHANNEL - DEDICATED TRANSPORT - VOICE GRADE																
		Interoffice Channel - Dedicated Transport - 2-Wire Voice Grade - Per Mile per mo			U1TVX	1L5XX	0.0084										
		Interoffice Channel - Dedicated Transport- 2- Wire Voice Grade - Facility Termination per month			U1TVX	U1TV2	26.02	42.69	28.66	16.51	6.34		10.73			1.65	
		Interoffice Channel - Dedicated Transpor t- 2-Wire Voice Grade Rev Bat. - Per Mile per month			U1TVX	1L5XX	0.0084										
		Interoffice Channel - Dedicated Transport- 2- Wire VG Rev Bat. - Facility Termination per month			U1TVX	U1TR2	26.02	42.69	28.66	16.51	6.34		10.73			1.65	
		Interoffice Channel - Dedicated Transport - 4-Wire Voice Grade - Per Mile per month			U1TVX	1L5XX	0.0084										
		Interoffice Channel - Dedicated Transport - 4- Wire Voice Grade - Facility Termination per month			U1TVX	U1TV4	23.2	42.69	28.66	16.51	6.34		10.73			1.65	
		Interoffice Channel - Dedicated Transport - 56 kbps - per mile per mor			U1TDX	1L5XX	0.0084										
		Interoffice Channel - Dedicated Transport - 56 kbps - Facility Termination per mo			U1TDX	U1TD5	18.95	42.69	28.66	16.51	6.34		10.73			1.65	
		Interoffice Channel - Dedicated Transport - 64 kbps - per mile per mor			U1TDX	1L5XX	0.0084										
		Interoffice Channel - Dedicated Transport - 64 kbps - Facility Termination per mo			U1TDX	U1TD6	18.95	42.69	28.66	16.51	6.34		10.73			1.65	
	INTEROFFICE CHANNEL - DEDICATED TRANSPORT - DS1																
		Interoffice Channel - Dedicated Channel - DS1 - Per Mile per mor			U1TD1	1L5XX	0.171										
		Interoffice Channel - Dedicated Tranport - DS1 - Facility Termination per mo			U1TD1	U1TF1	90.87	95.16	88.78	16.74	14.85		10.73			1.65	
	INTEROFFICE CHANNEL - DEDICATED TRANSPORT- DS3																
		Interoffice Channel - Dedicated Transport - DS3 - Per Mile per mor			U1TD3	1L5XX	3.57										
		Interoffice Channel - Dedicated Transport - DS3 - Facility Termination per mo			U1TD3	U1TF3	1101	302.43	197.7	64.94	63.61		10.73			1.65	
	INTEROFFICE CHANNEL - DEDICATED TRANSPORT- STS-1																
		Interoffice Channel - Dedicated Transport - STS-1 - Per Mile per mor			U1TS1	1L5XX	3.57										
		Interoffice Channel - Dedicated Transport - STS-1 - Facility Termination per mo			U1TS1	U1TFS	1085	302.43	197.7	64.94	63.61		10.73			1.65	

CATEGORY	NOTES	UNBUNDLED NETWORK ELEMENT	Interim	Zone	BCS	USOC	RATES ($)					OSS RATES ($)					
												Svc Order Submitted Elec per LSR	Svc Order Submitted Manually per LSR	Incremental Charge - Manual Svc Order vs. Electronic-1st	Incremental Charge - Manual Svc Order vs. Electronic-Add'l	Incremental Charge - Manual Svc Order vs. Electronic-Disc 1st	Incremental Charge - Manual Svc Order vs. Electronic-Disc Add'l
								Nonrecurring		Nonrecurring							
										Disconnect							
							Rec	First	Add'l	First	Add'l	SOMEC	SOMAN	SOMAN	SOMAN	SOMAN	SOMAN
	LOCAL CHANNEL - DEDICATED TRANSPORT																
	NOTE: LOCAL CHANNEL DEDICATED TRANSPORT - minimum billing period - below DS3=one month, DS3 and above=four months																
		Local Channel - Dedicated - 2-Wire Voice Grade per month - Zone		1	ULCVX	ULDV2	21.04	239.67	42.34	33.93	3.61		10.73			1.65	
		Local Channel - Dedicated - 2-Wire Voice Grade per month - Zone		2	ULCVX	ULDV2	29.15	239.67	42.34	33.93	3.61		10.73			1.65	
		Local Channel - Dedicated - 2-Wire Voice Grade per month - Zone		3	UNCVX	ULDV2	55.14	239.67	42.34	33.93	3.61		10.73			1.65	
		Local Channel - Dedicated - 2-Wire Voice Grade Rev. Bat. Per month - Zone		1	ULCVX	ULDR2	21.04	239.67	42.34	33.93	3.61		10.73			1.65	
		Local Channel - Dedicated - 2-Wire Voice Grade Rev. Bat. Per Month - Zone		2	ULCVX	ULDR2	29.15	239.67	42.34	33.93	3.61		10.73			1.65	
		Local Channel - Dedicated - 2-Wire Voice Grade Rev. Bat. Per Month - Zone		3	ULCVX	ULDR2	55.14	239.67	42.34	33.93	3.61		10.73			1.65	
		Local Channel - Dedicated - 4-Wire Voice Grade per month - Zone		1	UNCVX	ULDV4	21.91	240.3	42.97	34.47	4.15		10.73			1.65	
		Local Channel - Dedicated - 4-Wire Voice Grade per month - Zone		2	UNCVX	ULDV4	30.35	240.3	42.97	34.47	4.15		10.73			1.65	
		Local Channel - Dedicated - 4-Wire Voice Grade per month - Zone		3	UNCVX	ULDV4	57.4	240.3	42.97	34.47	4.15		10.73			1.65	
		Local Channel - Dedicated - DS1 per month - Zone		1	ULDD1	ULDF1	34.49	195.33	165.48	21.9	15.28		10.73			1.65	
		Local Channel - Dedicated - DS1 per month - Zone		2	ULDD1	ULDF1	47.78	195.33	165.48	21.9	15.28		10.73			1.65	
		Local Channel - Dedicated - DS1 per month - Zone		3	ULDD1	ULDF1	90.38	195.33	165.48	21.9	15.28		10.73			1.65	
		Local Channel - Dedicated - DS3 - Per Mile per mon			ULDD3	1L5NC	7.83										
		Local Channel - Dedicated - DS3 - Facility Termination per mor			ULDD3	ULDF3	554.83	501.59	309.24	125.43	87.3		10.73			1.65	
		Local Channel - Dedicated - STS-1- Per Mile per mon			ULDS1	1L5NC	7.83										
		Local Channel - Dedicated - STS-1 - Facility Termination per mor			ULDS1	ULDFS	563.73	501.59	309.24	125.43	87.3		10.73			1.65	
MULTIPLEXERS																	
		Channelization - DS1 to DS0 Channel Syste			UXTD1	MQ1	151.74	91.44	64.57	10	9.46		10.73			1.65	
		OCU-DP COCI (data) - DS1 to DS0 Channel System - per month (2.4-64kb			UDL	1D1DD	2.16	9.08	6.38								
		2-wire ISDN COCI (BRITE) - DS1 to DS0 Channel Systsem - per mon			UDN	UC1CA	3.76	9.08	6.38								
		Voice Grade COCI - DS1 to DS0 Channel System - per mont			UEA	1D1VG	1.42	9.08	6.38								
		DS3 to DS1 Channel System per montl			UXTD3	MQ3	218.7	179.66	106.96	36.37	35.22		10.73			1.65	
		STS1 to DS1 Channel System per mont			UXTS1	MQ3	218.7	179.66	106.96	36.37	35.22		10.73			1.65	
		DS3 Interface Unit (DS1 COCI) used with Loop per montl			USL	UC1D1	14.24	9.08	6.38								
DARK FIBER																	
		Dark Fiber, Four Fiber Strands, Per Route Mile or Fraction Thereof per month - Local Channel			UDF	1L5DC	54.11										
		NRC Dark Fiber - Local Channe			UDF	UDFC4		677.34	174.79	277.72	179.41		10.73			1.65	
		Dark Fiber, Four Fiber Strands, Per Route Mile or Fraction Thereof per month - Interoffice Channe			UDF	1L5DF	25.14										
		NRC Dark Fiber - Interoffice Channe			UDF	UDF14		677.34	174.79	277.72	179.41		10.73			1.65	
		Dark Fiber, Four Fiber Strands, Per Route Mile or Fraction Thereof per month - Local Loop			UDF	1L5DL	54.11										
		NRC Dark Fiber - Local Loop			UDF	UDFL4		677.34	174.79	277.72	179.41		10.73			1.65	
TRANSPORT OTHER																	
	Optional Features & Functions:																
		Clear Channel Capability (B8ZS/ESF) Option - Subsequent - per DS1 Chanr			UNC1X	CCOEF		184.92	23.82	2.07	0.8		10.73			1.65	
		Clear Channel Capability (B8ZS/SF) Option - Subsequent - per DS1 Chanr			UNC1X	CCOSF		184.92	23.82	2.07	0.8		10.73			1.65	
8XX ACCESS TEN DIGIT SCREENING																	
		8XX Access Ten Digit Screening, Per Ca			OHD		0.0006165										
		8XX Access Ten Digit Screening, Reservation Charge Per 8XX Number Reserv			OHD	N8R1X		3.74	0.64				10.73			1.65	
		8XX Access Ten Digit Screening, Per 8XX No. Established W/O POTS Translatic			OHD			7.92	1.06	5.2	0.64		10.73			1.65	
		8XX Access Ten Digit Screening, Per 8XX No. Established With POTS Translatic			OHD	N8FTX		7.92	1.06	5.2	0.64		10.73			1.65	
		8XX Access Ten Digit Screening, Customized Area of Service Per 8XX Numt			OHD	N8FCX		3.74	1.87				10.73			1.65	
		8XX Access Ten Digit Screening, Multiple InterLATA CXR Routing Per CXR Requested Per 8XX No			OHD	N8FMX		4.37	2.5				10.73			1.65	
		8XX Access Ten Digit Screening, Change Charge Per Reque			OHD	N8FAX		4.37	0.64				10.73			1.65	
		8XX Access Ten Digit Screening, Call Handling and Destination Featur			OHD	N8FDX		3.74					10.73			1.65	

CATEGORY	NOTES	UNBUNDLED NETWORK ELEMENT	Interim	Zone	BCS	USOC	RATES ($)					OSS RATES ($)					
												Svc Order Submitted Elec per LSR	Svc Order Submitted Manually per LSR	Incremental Charge - Manual Svc Order vs. Electronic-1st	Incremental Charge - Manual Svc Order vs. Electronic-Add'l	Incremental Charge - Manual Svc Order vs. Electronic-Disc 1st	Incremental Charge - Manual Svc Order vs. Electronic-Disc Add'l
								Nonrecurring		Nonrecurring							
										Disconnect							
							Rec	First	Add'l	First	Add'l	SOMEC	SOMAN	SOMAN	SOMAN	SOMAN	SOMAN
		8XX Access Ten Digit Screening, w/ 8XX No. Delivery, per que			OHD		0.0006165										
		8XX Access Ten Digit Screening, w/ POTS No. Delivery, per que			OHD		0.0006165										
LINE INFORMATION DATA BASE ACCESS (LIDB)																	
		LIDB Common Transport Per Quer			OQT		0.0000195										
		LIDB Validation Per Quer			OQU		0.0132254										
		LIDB Originating Point Code Establishment or Chanç			OQT, OQU	NRPBX		49.71	49.71	49.71	49.71		10.73			1.65	
SIGNALING (CCS7)																	
		CCS7 Signaling Termination, Per STP Por			1DB	PT8SX	129.77						10.73			1.65	
		CCS7 Signaling Usage, Per TCAP Messag			1DB		0.0000592										
	NOTE: Applicable when measurement and billing capability exists.																
		CCS7 Signaling Connection, Per link (A lin			1DB	TPP++	18.39	39.28	39.28	16.51	16.51		10.73			1.65	
		CCS7 Signaling Connection, Per link (B link) (also known as D lir			1DB	TPP++	18.39	39.28	39.28	16.51	16.51		10.73			1.65	
		CCS7 Signaling Usage, Per ISUP Messag			1DB		0.0000148										
	NOTE: Applicable when measurement and billing capability exists.																
		CCS7 Signaling Usage Surrogate, per link per LAT			1DB	STU56	676.89						10.73			1.65	
		CCS7 Signaling Point Code, per Originating Point Code Establishment or Change, per STP affectec			1DB	CCAPO		41.5	41.5				10.73			1.65	
		CCS7 Signaling Point Code, per Destination Point Code Establishment or Change, Per Stp Affectec			1DB	CCAPD		8	8				10.73			1.65	
E911 SERVICE																	
		Local Channel - Dedicated - 2-wr Voice Grade - Zone					21.04	239.67	42.34	33.93	3.61		10.73			1.65	
		Local Channel - Dedicated - 2-wr Voice Grade - Zone					29.15	239.67	42.34	33.93	3.61		10.73			1.65	
		Local Channel - Dedicated - 2-wr Voice Grade - Zone					55.14	239.67	42.34	33.93	3.61		10.73			1.65	
		Interoffice Transport - Dedicated - 2-wr Voice Grade Per Mi					0.0084										
		Interoffice Transport - Dedicated - 2-wr Voice Grade Per Facility Terminati					26.02	42.69	28.66	16.51	6.34		10.73			1.65	
		Local Channel - Dedicated - DS1 - Zone					34.49	195.33	165.48	21.9	15.28		10.73			1.65	
		Local Channel - Dedicated - DS1 - Zone					47.78	195.33	165.48	21.9	15.28		10.73			1.65	
		Local Channel - Dedicated - DS1 - Zone					90.38	195.33	165.48	21.9	15.28		10.73			1.65	
		Interoffice Transport - Dedicated - DS1 Per Mil					0.171										
		Interoffice Transport - Dedicated - DS1 Per Facility Terminati					90.87	95.16	88.78	16.74	14.85		10.73			1.65	
CALLING NAME (CNAM) SERVICE																	
		CNAM for DB Owners, Per Quer			OQV		0.0010161										
		CNAM for Non DB Owners, Per Quer			OQV		0.0010161										
		CNAM For DB Owners - Service Establishmer			OQV			22.85	22.85	17.14	17.14		10.73			1.65	
		CNAM For Non DB Owners - Service Establishmer			OQV			22.85	22.85	17.14	17.14		10.73			1.65	
		CNAM For DB Owners - Service Provisioning With Point Code Establishm			OQV			1435	1061	317.7	233.6		10.73			1.65	
		CNAM For Non Db Owners - Service Provisioning With Point Code Establishm			OQV			492.73	355.07	322.83	233.6		10.73			1.65	
		CNAM (Non-Databs Owner), NRC, applies when using the Character Based User Interface (CHUI)			OQV	CDDCH		595	595				10.73			1.65	
LNP QUERY SERVICE																	
		LNP Charge Per query					0.000842										
		LNP Service Establishment Manu						12.46	12.46	9.35	9.35		10.73			1.65	
		LNP Service Provisioning with Point Code Establishme						591.01	301.93	218.42	160.6		10.73			1.65	
	OPERATOR SERVICES AND DIRECTORY ASSISTANCE																
OPERATOR CALL PROCESSING																	

CATEGORY	NOTES	UNBUNDLED NETWORK ELEMENT	Interim	Zone	BCS	USOC	RATES ($)					OSS RATES ($)					
												Svc Order Submitted Elec per LSR	Svc Order Submitted Manually per LSR	Incremental Charge - Manual Svc Order vs. Electronic-1st	Incremental Charge - Manual Svc Order vs. Electronic-Add'l	Incremental Charge - Manual Svc Order vs. Electronic-Disc 1st	Incremental Charge - Manual Svc Order vs. Electronic-Disc Add'l
								Nonrecurring		Nonrecurring							
										Disconnect							
							Rec	First	Add'l	First	Add'l	SOMEC	SOMAN	SOMAN	SOMAN	SOMAN	SOMAN
		Oper. Call Processing - Oper. Provided, Per Min. - Using BST LIE					1.2										
		Oper. Call Processing - Oper. Provided, Per Min. - Using Foreign LIE					1.24										
		Oper. Call Processing - Fully Automated, per Call - Using BST LIE					0.2										
		Oper. Call Processing - Fully Automated, per Call - Using Foreign LIE					0.2										
INWARD OPERATOR SERVICES																	
		Inward Operator Services - Verification, Per Ca					1										
		Inward Operator Services - Verification and Emergency Interrupt - Per C					1.95										
BRANDING - OPERATOR CALL PROCESSING																	
		Recording of Custom Branded OA Announcement				CBAOS		7000	7000	9.61	9.61		10.73			1.65	
		Loading of Custom Branded OA Announcement per shelf/NAV				CBAOL		500	500				10.73				
DIRECTORY ASSISTANCE SERVICES																	
	DIRECTORY ASSISTANCE ACCESS SERVICE																
		Directory Assistance Access Service Calls, Charge Per Ca					0.275										
	DIRECTORY ASSISTANCE CALL COMPLETION ACCESS SERVICE (DACC)																
		Directory Assistance Call Completion Access Service (DACC), Per Call Atten					0.1										
	UNBRANDING																
	DIRECTORY TRANSPORT																
		Directory Transport - Local Channel DS					43.64	242.45	226.44				10.73			1.65	
		Directory Transport - DS1 Level Interoffice Per Mi					0.6013										
		Directory Transport - DS1 Level Interoffice Per Facility Terminati					99.79	45.91	44.18				10.73			1.65	
		Switched Common Transport Per DA Access Service Per Ca					0.0003										
		Switched Common Transport Per DA Access Service Per Call Per M					0.00001										
		Access Tandem Switching Per DA Access Service Per Ca					0.00055										
		Directory Transport - Installation NRC, Per Trunk or Signaling Connecti						206.06	4.71				10.73			1.65	
	DIRECTORY ASSISTANCE DATA BASE SERVICE (DADS)																
		Directory Assistance Data Base Service Charge Per Listir					0.04										
		Directory Assistance Data Base Service, per mont				DBSOF	150										
BRANDING - DIRECTORY ASSISTANCE																	
		Custom Branding Announcement, per Recording to be used with the provision of DA			AMT	CBADA		3000	3000								
		Loading of Custom Branded Announcement per DRAM Card/Switch			AMT	CBADC		690	690								
SELECTIVE ROUTING																	
		Selective Routing Per Unique Line Class Code Per Request Per Swit				USRCR		84.33	84.33	11.46	11.46		10.73			1.65	
VIRTUAL COLLOCATION																	
		Virtual Collocation - 2-wire Cross Connects (loo			ueanl,ue a,udn,ud c,ual,uhl ,ucl,ueq	UEAC2	0.0297	33.86	31.95				10.73			1.65	
		Virtual Collocation - 2-wire Cross Connects (por				VE1R2	0.0502	11.57	11.57				10.73			1.65	
		Virtual Collocation - 4-wire Cross Connects (loo			uea,uhl, ucl,udi	UEAC4	0.0594	33.99	32				10.73			1.65	
		Virtual Collocation - 4-wire Cross Connects (por				VE1R4	0.0502	11.57	11.57				10.73			1.65	
		Virtual Collocatin - DS1 Cross Connect			USL,UL C	CNC1X	1.37	53.3	40.2								
AIN SELECTIVE CARRIER ROUTING																	
		Regional Service Establishment			SRC	SRCEC		191575		6974			10.73			1.65	
		End Office Establishment			SRC	SRCEO		168.89	168.89	0.63	0.63		10.73			1.65	
		Query NRC, per query			SRC		0.0030998										

CATEGORY	NOTES	UNBUNDLED NETWORK ELEMENT	Interim	Zone	BCS	USOC	RATES ($)					OSS RATES ($)					
												Svc Order Submitted Elec per LSR	Svc Order Submitted Manually per LSR	Incremental Charge - Manual Svc Order vs. Electronic-1st	Incremental Charge - Manual Svc Order vs. Electronic-Add'l	Incremental Charge - Manual Svc Order vs. Electronic-Disc 1st	Incremental Charge - Manual Svc Order vs. Electronic-Disc Add'l
								Nonrecurring		Nonrecurring							
										Disconnect							
							Rec	First	Add'l	First	Add'l	SOMEC	SOMAN	SOMAN	SOMAN	SOMAN	SOMAN
AIN - BELLSOUTH AIN SMS ACCESS SERVICE																	
		AIN SMS Access Service - Service Establishment, Per State, Initial Setup				CAMSE		39.27	39.27	33.04	33.04		10.73			1.65	
		AIN SMS Access Service - Port Connection - Dial/Shared Access				CAMDP		7.79	7.79	7.38	7.38		10.73			1.65	
		AIN SMS Access Service - Port Connection - ISDN Access				CAM1P		7.79	7.79	7.38	7.38		10.73			1.65	
		AIN SMS Access Service - User Identification Codes - Per User ID Code				CAMAU		34.85	34.85	21.97	21.97		10.73			1.65	
		AIN SMS Access Service - Security Card, Per User ID Code, Initial or Replacement				CAMRC		73.76	73.76	9.51	9.51		10.73			1.65	
		AIN SMS Access Service - Storage, Per Unit (100 Kilobytes)					0.0029										
		AIN SMS Access Service - Session, Per Minute					0.7985										
		AIN SMS Access Service - Company Performed Session, Per Minute					0.4155										
AIN - BELLSOUTH AIN TOOLKIT SERVICE																	
		AIN Toolkit Service - Service Establishment Charge, Per State, Initial Setup				BAPSC		39.27	39.27	33.04	33.04		10.73			1.65	
		AIN Toolkit Service - Training Session, Per Customer				BAPVX		8406	8406				10.73			1.65	
		AIN Toolkit Service - Trigger Access Charge, Per Trigger, Per DN, Term. Attempt				BAPTT		7.79	7.79	7.38	7.38		10.73			1.65	
		AIN Toolkit Service - Trigger Access Charge, Per Trigger, Per DN, Off-Hook Delay				BAPTD		7.79	7.79	7.38	7.38		10.73			1.65	
		AIN Toolkit Service - Trigger Access Charge, Per Trigger, Per DN, Off-Hook Immediate				BAPTM		7.79	7.79	7.38	7.38		10.73			1.65	
		AIN Toolkit Service - Trigger Access Charge, Per Trigger, Per DN, 10-Digit PODP				BAPTO		34.32	34.32	11.66	11.66		10.73			1.65	
		AIN Toolkit Service - Trigger Access Charge, Per Trigger, Per DN, CDP				BAPTC		34.32	34.32	11.66	11.66		10.73			1.65	
		AIN Toolkit Service - Trigger Access Charge, Per Trigger, Per DN, Feature Code				BAPTF		34.32	34.32	11.66	11.66		10.73			1.65	
		AIN Toolkit Service - Query Charge, Per Query					0.0509436										
		AIN Toolkit Service - Type 1 Node Charge, Per AIN Toolkit Subscription, Per Node, Per Query					0.0062787										
		AIN Toolkit Service - SCP Storage Charge, Per SMS Access Account, Per 100 Kilobytes					0.06										
		AIN Toolkit Service - Monthly report - Per AIN Toolkit Service Subscription				BAPMS	8	7.79	7.79	4.47	4.47		10.73			1.65	
		AIN Toolkit Service - Special Study - Per AIN Toolkit Service Subscription				BAPLS	3.85	8.62	8.62				10.73			1.65	
		AIN Toolkit Service - Call Event Report - Per AIN Toolkit Service Subscription				BAPDS	4.28	7.79	7.79	4.47	4.47		10.73			1.65	
		AIN Toolkit Service - Call Event Special Study - Per AIN Toolkit Service Subscription				BAPES	0.13	8.62	8.62				10.73			1.65	
ODUF/EDOUF/ADUF/CMDS																	
	ACCESS DAILY USAGE FILE (ADUF)																
		ADUF: Message Processing, per messag					0.013928										
		ADUF: Data Transmission (CONNECT:DIRECT), per messag					0.00012927										
	ENHANCED OPTIONAL DAILY USAGE FILE (EODUF)																
		EODUF: Message Processing, per messag					0.222451										
	OPTIONAL DAILY USAGE FILE (ODUF)																
		ODUF: Recording, per message					0.0000068										
		ODUF: Message Processing, per messag					0.006614										
		ODUF: Message Processing, per Magnetic Tape provisione					48.77										
		ODUF: Data Transmission (CONNECT:DIRECT), per messag					0.00010772										
ENHANCED EXTENDED LINK (EELs)																	

CATEGORY	NOTES	UNBUNDLED NETWORK ELEMENT	Interim	Zone	BCS	USOC	RATES ($)					OSS RATES ($)					
												Svc Order Submitted Elec per LSR	Svc Order Submitted Manually per LSR	Incremental Charge - Manual Svc Order vs. Electronic-1st	Incremental Charge - Manual Svc Order vs. Electronic-Add'l	Incremental Charge - Manual Svc Order vs. Electronic-Disc 1st	Incremental Charge - Manual Svc Order vs. Electronic-Disc Add'l
								Nonrecurring			Nonrecurring						
											Disconnect						
							Rec	First	Add'l	First	Add'l	SOMEC	SOMAN	SOMAN	SOMAN	SOMAN	SOMAN
	NOTE: New EELs available in State of Georgia, density zone 1 of following SMAs: Orlando, FL; Miami, FL; Ft. Lauderdale, FLl; Nashville, TN; New Orleans, LA;																
	NOTE: Charlotte-Gastonia-Rockhill, NC; Greensboro-Winston Salem-High Point, NC. Use all rates below except Switch As Is Charge.																
	NOTE: In all states, EEL network elements shown below also apply to currently combined facilities which are converted to UNE rates. A Switch As Is Charge applies to currently combined facilities converted to UNEs.(Non-recurring rates do not apply.)																
	NOTE: In Georgia, the EEL network elements apply to ordinarily combined network elements per the GA PSC order.(No Switch As Is Charge.)																
	2-WIRE VOICE GRADE EXTENDED LOOP WITH DEDICATED DS1 INTEROFFICE TRANSPORT (EEL)																
		First 2-Wire VG Loop(SL2) in a DS1 Interofficed Transport Combination - Zone		1	UNCVX	UEAL2	13.43	115.02	54.58	43.28	5.68		10.73			1.65	
		First 2-Wire VG Grade Loop(SL2) in a DS1 Interofficed Transport Combination - Zone 2		2	UNCVX	UEAL2	18.6	115.02	54.58	43.28	5.68		10.73			1.65	
		First 2-Wire VG Grade Loop(SL2) in a DS1 Interofficed Transport Combination - Zone 3		3	UNCVX	UEAL2	35.18	115.02	54.58	43.28	5.68		10.73			1.65	
		Interoffice Transport - Dedicated - DS1 combination - Per Mile per mor			UNC1X	1L5XX	0.171										
		Interoffice Transport - Dedicated - DS1 combination - Facility Termination per mo			UNC1X	U1TF1	90.87	157.3	110.42	41.12	16.18		10.73			1.65	
		DS1 Channelization System Per Mont			UNC1X	MQ1	151.74	51.63	13.29	1.35	1.21						
		Voice Grade COCI - DS1 To Ds0 Interface - Per Montl			UNCVX	1D1VG	1.42	6.05	4.36								
		Each Additional 2-Wire VG Loop(SL 2) in the same DS1 Interoffice Transport Combination - Zone 1		1	UNCVX	UEAL2	13.43	115.02	54.58	43.28	5.68		10.73			1.65	
		Each Additional 2-Wire VG Loop(SL2) in the same DS1 Interoffice Transport Combination - Zone 2		2	UNCVX	UEAL2	18.6	115.02	54.58	43.28	5.68		10.73			1.65	
		Each Additional 2-Wire VG Loop(SL2) in the same DS1 Interoffice Transport Combination - Zone 3		3	UNCVX	UEAL2	35.18	115.02	54.58	43.28	5.68		10.73			1.65	
		Voice Grade COCI - DS1 to DS0 Channel System combination - per mon			UNCVX	1D1VG	1.42	6.05	4.36								
		Nonrecurring Currently Combined Network Elements Switch -As-Is Char			UNC1X	UNCCC		8.1	8.1	8.1	8.1		10.73			1.65	
	4-WIRE VOICE GRADE EXTENDED LOOP WITH DEDICATED DS1 INTEROFFICE TRANSPORT (EEL)																
		First 4-Wire Analog Voice Grade Loop in a DS1 Interoffice Transport Combination - Zone 1		1	UNCVX	UEAL4	21.23	115.02	54.58	43.28	5.68		10.73			1.65	
		First 4-Wire Analog Voice Grade Loop in a DS1 Interoffice Transport Combination - Zone 2		2	UNCVX	UEAL4	29.41	115.02	54.58	43.28	5.68		10.73			1.65	
		First 4-Wire Analog Voice Grade Loop in a DS1 Interoffice Transport Combination - Zone 3		3	UNCVX	UEAL4	55.63	115.02	54.58	43.28	5.68		10.73			1.65	
		Interoffice Transport - Dedicated - DS1 combination - Per Mile Per Mor			UNC1X	1L5XX	0.171										
		Interoffice Transport - Dedicated - DS1 - Facility Termination Per Mor			UNC1X	U1TF1	90.87	157.3	110.42	41.12	16.18		10.73			1.65	
		Channelization - Channel System DS1 to DS0 combination Per Mor			UNC1X	MQ1	151.74	51.63	13.29	1.35	1.21						
		Voice Grade COCI - DS1 to DS0 Channel System combination - per mon			UNCVX	1D1VG	1.42	6.05	4.36								
		Additional 4-Wire Analog Voice Grade Loop in same DS1 Interoffice Transport Combination - Zone 1		1	UNCVX	UEAL4	21.23	115.02	54.58	43.28	5.68		10.73			1.65	
		Additional 4-Wire Analog Voice Grade Loop in same DS1 Interoffice Transport Combination - Zone 2		2	UNCVX	UEAL4	29.41	115.02	54.58	43.28	5.68		10.73			1.65	
		Additional 4-Wire Analog Voice Grade Loop in same DS1 Interoffice Transport Combination - Zone 3		3	UNCVX	UEAL4	55.63	115.02	54.58	43.28	5.68		10.73			1.65	
		Voice Grade COCI - DS1 to DS0 Channel System combination - per mon			UNCVX	1D1VG	1.42	6.05	4.36								
		Nonrecurring Currently Combined Network Elements Switch -As-Is Char			UNC1X	UNCCC		8.1	8.1	8.1	8.1		10.73			1.65	
	4-WIRE 56 KBPS EXTENDED DIGITAL LOOP WITH DEDICATED DS1 INTEROFFICE TRANSPORT (EEL)																

CATEGORY	NOTES	UNBUNDLED NETWORK ELEMENT	Interim	Zone	BCS	USOC	RATES ($)					OSS RATES ($)					
												Svc Order Submitted Elec per LSR	Svc Order Submitted Manually per LSR	Incremental Charge - Manual Svc Order vs. Electronic-1st	Incremental Charge - Manual Svc Order vs. Electronic-Add'l	Incremental Charge - Manual Svc Order vs. Electronic-Disc 1st	Incremental Charge - Manual Svc Order vs. Electronic-Disc Add'l
								Nonrecurring		Nonrecurring							
										Disconnect							
							Rec	First	Add'l	First	Add'l	SOMEC	SOMAN	SOMAN	SOMAN	SOMAN	SOMAN
		First 4-Wire 56Kbps Digital Grade Loop in a DS1 Interoffice Transport Combination - Zone 1		1	UNCDX	UDL56	24.48	115.02	54.58	43.28	5.68		10.73			1.65	
		First 4-wire 56Kbps Digital Grade Loop in a DS1 Interoffice Transport Combination - Zone 2		2	UNCDX	UDL56	33.91	115.02	54.58	43.28	5.68		10.73			1.65	
		First 4-Wire 56Kbps Digital Grade Loop in a DS1 Interoffice Transport Combination - Zone 3		3	UNCDX	UDL56	64.14	115.02	54.58	43.28	5.68		10.73			1.65	
		Interoffice Transport - Dedicated - DS1 combination - Per Mile Per Mor			UNC1X	1L5XX	0.171										
		Interoffice Transport - Dedicated - DS1 - combination Facility Termination Per Mo			UNC1X	U1TF1	90.87	157.3	110.42	41.12	16.18		10.73			1.65	
		Channelization - Channel System DS1 to DS0 combination Per Mor			UNC1X	MQ1	151.74	51.63	13.29	1.35	1.21						
		OCU-DP COCI (data) - DS1 to DS0 Channel System - per month (2.4-64kb			UNCDX	1D1DD	2.16	6.05	4.36								
		Additional 4-Wire 56Kbps Digital Grade Loopin same DS1 Interoffice Transport Combination - Zone 1		1	UNCDX	UDL56	24.48	115.02	54.58	43.28	5.68		10.73			1.65	
		Additional 4-Wire 56Kbps Digital Grade Loopin same DS1 Interoffice Transport Combination - Zone 2		2	UNCDX	UDL56	33.91	115.02	54.58	43.28	5.68		10.73			1.65	
		Additional 4-Wire 56Kbps Digital Grade Loopin same DS1 Interoffice Transport Combination - Zone 3		3	UNCDX	UDL56	64.14	115.02	54.58	43.28	5.68		10.73			1.65	
		OCU-DP COCI (data) - DS1 to DS0 Channel System - combination per month (2.4-64kbs)			UNCDX	1D1DD	2.16	9.08	6.38								
		Nonrecurring Currently Combined Network Elements Switch -As-Is Char			UNC1X	UNCCC		8.1	8.1	8.1	8.1		10.73			1.65	
		4-WIRE 64 KBPS EXTENDED DIGITAL LOOP WITH DEDICATED DS1 INTEROFFICE TRANSPORT (EEL)															
		First 4-Wire 64Kbps Digital Grade Loop in a DS1 Interoffice Transport Combination - Zone 1		1	UNCDX	UDL64	24.48	115.02	54.58	43.28	5.68		10.73			1.65	
		First 4-Wire 64Kbps Digital Grade Loop in a DS1 Interoffice Transport Combination - Zone 2		2	UNCDX	UDL64	33.91	115.02	54.58	43.28	5.68		10.73			1.65	
		First 4-Wire 64Kbps Digital Grade Loop in a DS1 Interoffice Transport Combination - Zone 3		3	UNCDX	UDL64	64.14	115.02	54.58	43.28	5.68		10.73			1.65	
		Interoffice Transport - Dedicated - DS1 combination - Per Mile Per Mor			UNC1X	1L5XX	0.171										
		Interoffice Transport - Dedicated - DS1 combination - Facility Termination Per Mo			UNC1X	U1TF1	90.87	157.3	110.42	41.12	16.18		10.73			1.65	
		Channelization - Channel System DS1 to DS0 combination Per Mor			UNC1X	MQ1	151.74	51.63	13.29	1.35	1.21						
		OCU-DP COCI (data) - DS1 to DS0 Channel System combination - per month (2.4-64kbs)			UNCDX	1D1DD	2.16	6.05	4.36								
		Additional 4-Wire 64Kbps Digital Grade Loopin same DS1 Interoffice Transport Combination - Zone 1		1	UNCDX	UDL64	24.48	115.02	54.58	43.28	5.68		10.73			1.65	
		Additional 4-Wire 64Kbps Digital Grade Loopin same DS1 Interoffice Transport Combination - Zone 2		2	UNCDX	UDL64	33.91	115.02	54.58	43.28	5.68		10.73			1.65	
		Additional 4-Wire 64Kbps Digital Grade Loopin same DS1 Interoffice Transport Combination - Zone 3		3	UNCDX	UDL64	64.14	115.02	54.58	43.28	5.68		10.73			1.65	
		OCU-DP COCI (data) - DS1 to DS0 Channel System combination - per month (2.4-64kbs)			UNCDX	1D1DD	2.16	6.05	4.36								
		Nonrecurring Currently Combined Network Elements Switch -As-Is Char			UNC1X	UNCCC		8.1	8.1	8.1	8.1		10.73			1.65	
		4-WIRE DS1 DIGITAL EXTENDED LOOP WITH DEDICATED DS1 INTEROFFICE TRANSPORT (EEL)															
		4-Wire DS1 Digital Loop in Combination with DS1 Interoffice Transport - Zon		1	UNC1X	USLXX	69.22	196.32	110.28	76.38	13.03		10.73			1.65	
		4-Wire DS1 Digital Loop in Combination with DS1 Interoffice Transport - Zon		2	UNC1X	USLXX	95.89	196.32	110.28	76.38	13.03		10.73			1.65	
		4-Wire DS1 Digital Loop in Combination with DS1 Interoffice Transport - Zon		3	UNC1X	USLXX	181.38	196.32	110.28	76.38	13.03		10.73			1.65	
		Interoffice Transport - Dedicated - DS1 combination - Per Mile Per Mor			UNC1X	1L5XX	0.171										
		Interoffice Transport - Dedicated - DS1 combination - Facility Termination Per Mo			UNC1X	U1TF1	90.87	157.3	110.42	41.12	16.18		10.73			1.65	
		Nonrecurring Currently Combined Network Elements Switch -As-Is Char			UNC1X	UNCCC		8.1	8.1	8.1	8.1		10.73			1.65	
		4-WIRE DS1 DIGITAL EXTENDED LOOP WITH DEDICATED DS3 INTEROFFICE TRANSPORT (EEL)															
		First DS1Loop in DS3 Interoffice Transport Combination - Zone		1	UNC1X	USLXX	69.22	196.32	110.28	76.38	13.03		10.73			1.65	
		First DS1Loop in DS3 Interoffice Transport Combination - Zone		2	UNC1X	USLXX	95.89	196.32	110.28	76.38	13.03		10.73			1.65	
		First DS1Loop in DS3 Interoffice Transport Combination - Zone		3	UNC1X	USLXX	181.38	196.32	110.28	76.38	13.03		10.73			1.65	

CATEGORY	NOTES	UNBUNDLED NETWORK ELEMENT	Interim	Zone	BCS	USOC	RATES ($)					OSS RATES ($)					
												Svc Order Submitted Elec per LSR	Svc Order Submitted Manually per LSR	Incremental Charge - Manual Svc Order vs. Electronic-1st	Incremental Charge - Manual Svc Order vs. Electronic-Add'l	Incremental Charge - Manual Svc Order vs. Electronic-Disc 1st	Incremental Charge - Manual Svc Order vs. Electronic-Disc Add'l
								Nonrecurring		Nonrecurring							
										Disconnect							
							Rec	First	Add'l	First	Add'l	SOMEC	SOMAN	SOMAN	SOMAN	SOMAN	SOMAN
		Interoffice Transport - Dedicated - DS3 combination - Per Mile Per Mor			UNC3X	1L5XX	3.57										
		Interoffice Transport - Dedicated - DS3 - Facility Termination per mor			UNC3X	U1TF3	1101	288.5	124.61	34.8	19.96		10.73			1.65	
		DS3 to DS1 Channel System combination per mont			UNC3X	MQ3	218.7	104.13	50.98	10.96	3.84						
		DS3 Interface Unit (DS1 COCI) combination per montl			UNC1X	UC1D1	14.24	6.05	4.36								
		Additional DS1Loop in DS3 Interoffice Transport Combination - Zone		1	UNC1X	USLXX	69.22	196.32	110.28	76.38	13.03		10.73			1.65	
		Additional DS1Loop in DS3 Interoffice Transport Combination - Zone		2	UNC1X	USLXX	95.89	196.32	110.28	76.38	13.03		10.73			1.65	
		Additional DS1Loop in DS3 Interoffice Transport Combination - Zone		3	UNC1X	USLXX	181.38	196.32	110.28	76.38	13.03		10.73			1.65	
		DS3 Interface Unit (DS1 COCI) combination per montl			UNC1X	UC1D1	14.24	6.05	4.36								
		Nonrecurring Currently Combined Network Elements Switch -As-Is Char			UNC3X	UNCCC		8.1	8.1	8.1	8.1		10.73			1.65	
	2-WIRE VOICE GRADE EXTENDED LOOP/ 2 WIRE VOICE GRADE INTEROFFICE TRANSPORT (EEL)																
		2-WireVG Loop used with 2-wire VG Interoffice Transport Combination - Zone		1	UNCVX	UEAL2	13.43	115.02	54.58	43.28	5.68		10.73			1.65	
		2-WireVG Loop used with 2-wire VG Interoffice Transport Combination - Zone		2	UNCVX	UEAL2	18.6	115.02	54.58	43.28	5.68		10.73			1.65	
		2-WireVG Loop used with 2-wire VG Interoffice Transport Combination - Zone		3	UNCVX	UEAL2	35.18	115.02	54.58	43.28	5.68		10.73			1.65	
		Interoffice Transport - Dedicated - 2-wire VG combination - Per Mile Per Mor			UNCVX	1L5XX	0.0084										
		Interoffice Transport - Dedicated - 2- Wire Voice Grade combination - Facility Termination per montl			UNCVX	U1TV2	26.02	85.38	47.42	40.82	16.25		10.73			1.65	
		Nonrecurring Currently Combined Network Elements Switch -As-Is Char			UNCVX	UNCCC		8.1	8.1	8.1	8.1		10.73			1.65	
	4-WIRE VOICE GRADE EXTENDED LOOP/ 4 WIRE VOICE GRADE INTEROFFICE TRANSPORT (EEL)																
		4-WireVG Loop used with 4-wire VG Interoffice Transport Combination - Zone		1	UNCVX	UEAL4	21.23	115.02	54.58	43.28	5.68		10.73			1.65	
		4-WireVG Loop used with 4-wire VG Interoffice Transport Combination - Zone		2	UNCVX	UEAL4	29.41	115.02	54.58	43.28	5.68		10.73			1.65	
		4-WireVG Loop used with 4-wire VG Interoffice Transport Combination - Zone		3	UNCVX	UEAL4	55.63	115.02	54.58	43.28	5.68		10.73			1.65	
		Interoffice Transport - Dedicated - 4-wire VG combination - Per Mile Per Mor			UNCVX	1L5XX	0.0084										
		Interoffice Transport - Dedicated - 4- Wire Voice Grade combination - Facility Termination per montl			UNCVX	U1TV4	23.2	85.38	47.42	40.82	16.25		10.73			1.65	
		Nonrecurring Currently Combined Network Elements Switch -As-Is Char			UNCVX	UNCCC		8.1	8.1	8.1	8.1		10.73			1.65	
	DS3 DIGITAL EXTENDED LOOP WITH DEDICATED DS3 INTEROFFICE TRANSPORT (EEL)																
		High Capacity Unbundled Local Loop - DS3 combination - Per Mile per mor			UNC3X	1L5ND	10.06										
		High Capacity Unbundled Local Loop - DS3 combination - Facility Termination per month			UNC3X		387.1	220.36	139.5	60.49	23.69						
		Interoffice Transport - Dedicated - DS3 - Per Mile per mon			UNC3X	1L5XX	3.57										
		Interoffice Transport - Dedicated - DS3 combination - Facility Termination per per month			UNC3X	U1TF3	1101	288.5	124.61	34.8	19.96		10.73			1.65	
		Nonrecurring Currently Combined Network Elements Switch -As-Is Char			UNC3X	UNCCC		8.1	8.1	8.1	8.1		10.73			1.65	
	STS1 DIGITAL EXTENDED LOOP WITH DEDICATED STS1 INTEROFFICE TRANSPORT (EEL)																
		High Capacity Unbundled Local Loop - STS1 combination - Per Mile per mor			UNCSX	1L5ND	10.06										
		High Capacity Unbundled Local Loop - STS1 combination - Facility Termination per month			UNCSX	UDLS1	426.68	220.36	139.5	60.49	23.69						
		Interoffice Transport - Dedicated - STS1 combination - Per Mile per mor			UNCSX	1L5XX	3.57										
		Interoffice Transport - Dedicated - STS1 combination - Facility Termination per mo			UNCSX	U1TFS	1085	288.5	124.61	34.8	19.96		10.73			1.65	
		Nonrecurring Currently Combined Network Elements Switch -As-Is Char			UNCSX	UNCCC		8.1	8.1	8.1	8.1		10.73			1.65	
	2-WIRE ISDN EXTENDED LOOP WITH DS1 INTEROFFICE TRANSPORT (EEL)																
		First 2-Wire ISDN Loop in a DS1 Interoffice Combination Transport - Zone		1	UNCNX	U1L2X	20.44	115.02	54.58	43.28	5.68		10.73			1.65	
		First 2-Wire ISDN Loop in a DS1 Interoffice Combination Transport - Zone		2	UNCNX	U1L2X	28.31	115.02	54.58	43.28	5.68		10.73			1.65	
		First 2-Wire ISDN Loop in a DS1 Interoffice Combination Transport - Zone		3	UNCNX	U1L2X	53.56	115.02	54.58	43.28	5.68		10.73			1.65	
		Interoffice Transport - Dedicated - DS1 combination - Per Mi			UNC1X	1L5XX	0.171										

CATEGORY	NOTES	UNBUNDLED NETWORK ELEMENT	Interim	Zone	BCS	USOC	RATES ($)					OSS RATES ($)					
												Svc Order Submitted Elec per LSR	Svc Order Submitted Manually per LSR	Incremental Charge - Manual Svc Order vs. Electronic-1st	Incremental Charge - Manual Svc Order vs. Electronic-Add'l	Incremental Charge - Manual Svc Order vs. Electronic-Disc 1st	Incremental Charge - Manual Svc Order vs. Electronic-Disc Add'l
								Nonrecurring		Nonrecurring							
										Disconnect							
							Rec	First	Add'l	First	Add'l	SOMEC	SOMAN	SOMAN	SOMAN	SOMAN	SOMAN
		Interoffice Transport - Dedicated - DS1 combintion - Facility Termination per mo			UNC1X	U1TF1	90.87	157.3	110.42	41.12	16.18		10.73			1.65	
		Channelization - Channel System DS1 to DS0 combination - per mor			UNC1X	MQ1	151.74	51.63	13.29	1.35	1.21						
		2-wire ISDN COCI (BRITE) - DS1 to DS0 Channel System combination - per mor			UNCNX	UC1CA	3.76	6.05	4.36								
		Additional 2-wire IDSN Loop in same DS1Interoffice Transport Combination - Zon		1	UNCNX	U1L2X	20.44	115.02	54.58	43.28	5.68		10.73			1.65	
		Additional 2-wire IDSN Loop in same DS1Interoffice Transport Combination - Zon		2	UNCNX	U1L2X	28.31	115.02	54.58	43.28	5.68		10.73			1.65	
		Additional 2-wire IDSN Loop in same DS1Interoffice Transport Combination - Zon		3	UNCNX	U1L2X	53.56	115.02	54.58	43.28	5.68		10.73			1.65	
		2-wire ISDN COCI (BRITE) - DS1 to DS0 Channel System combintaion- per mor			UNCNX	UC1CA	3.76	6.05	4.36								
		Nonrecurring Currently Combined Network Elements Switch -As-Is Char			UNC1X	UNCCC		8.1	8.1	8.1	8.1		10.73			1.65	
	4-WIRE DS1 DIGITAL EXTENDED LOOP WITH DEDICATED STS-1 INTEROFFICE TRANSPORT (EEL)																
		First DS1 Loop in STS1 Interoffice Transport Combination - Zone		1	UNC1X	USLXX	69.22	196.32	110.28	76.38	13.03		10.73			1.65	
		First DS1 Loop in STS1 Interoffice Transport Combination - Zone		2	UNC1X	USLXX	95.89	196.32	110.28	76.38	13.03		10.73			1.65	
		First DS1 Loop in STS1 Interoffice Transport Combination - Zone		3	UNC1X	USLXX	181.38	196.32	110.28	76.38	13.03		10.73			1.65	
		Interoffice Transport - Dedicated - STS1 combination - Per Mile Per Mor			UNCSX	1L5XX	3.57										
		Interoffice Transport - Dedicated - STS1 combination - Facility Terminat			UNCSX	U1TFS	1085	288.5	124.61	34.8	16.96		10.73			1.65	
		STS1 to DS1 Channel System conbination per mon			UNCSX	MQ3	218.7	104.13	50.98	10.96	3.84						
		DS3 Interface Unit (DS1 COCI) combination per mont			UNC1X	UC1D1	14.24	6.05	4.36								
		Additional DS1Loop in STS1 Interoffice Transport Combination - Zone		1	UNC1X	USLXX	69.22	196.32	110.28	76.38	13.03		10.73			1.65	
		Additional DS1Loop in STS1 Interoffice Transport Combination - Zone		2	UNC1X	USLXX	95.89	196.32	110.28	76.38	13.03		10.73			1.65	
		Additional DS1Loop in STS1 Interoffice Transport Combination - Zone		3	UNC1X	USLXX	181.38	196.32	110.28	76.38	13.03		10.73			1.65	
		DS3 Interface Unit (DS1 COCI) combination per mont			UNC1X	UC1D1	14.24	6.05	4.36								
		Nonrecurring Currently Combined Network Elements Switch -As-Is Char			UNCSX	UNCCC		8.1	8.1	8.1	8.1		10.73			1.65	
	4-WIRE 56 KBPS DIGITAL EXTENDED LOOP WITH 56 KBPS INTEROFFICE TRANSPORT (EEL)																
		4-wire 56 kbps Loop/4-wire 56 kbps Interoffice Transport Combination - Zone		1	UNCDX	UDL56	24.48	115.02	54.58	43.28	5.68		10.73			1.65	
		4-wire 56 kbps Loop/4-wire 56 kbps Interoffice Transport Combination - Zone		2	UNCDX	UDL56	33.91	115.02	54.58	43.28	5.68		10.73		1.65		
		4-wire 56 kbps Loop/4-wire 56 kbps Interoffice Transport Combination - Zone		3	UNCDX	UDL56	64.14	115.02	54.58	43.28	5.68		10.73			1.65	
		Interoffice Transport - Dedicated - 4-wire 56 kbps combination - Per M			UNCDX	1L5XX	0.0098										
		Interoffice Transport - Dedicated - 4-wire 56 kbps combination - Facility Terminat			UNCDX	U1TD5	19.31	85.38	47.42	40.82	16.25		10.73			1.65	
		Nonrecurring Currently Combined Network Elements Switch -As-Is Char			UNCDX	UNCCC		8.1	8.1	8.1	8.1		10.73			1.65	
	4-WIRE 64 KBPS DIGITAL EXTENDED LOOP WITH 64 KBPS INTEROFFICE TRANSPORT (EEL)																
		4-wire 64 kbps Loop/4-wire 64 kbps Interoffice Transport Combination - Zone		1	UNCDX	UDL64	24.48	115.02	54.58	43.28	5.68		10.73			1.65	
		4-wire 64 kbps Loop/4-wire 64 kbps Interoffice Transport Combination - Zone		2	UNCDX	UDL64	33.91	115.02	54.58	43.28	5.68		10.73			1.65	
		4-wire 64 kbps Loop/4-wire 64 kbps Interoffice Transport Combination - Zone		3	UNCDX	UDL64	64.14	115.02	54.58	43.28	5.68		10.73			1.65	
		Interoffice Transport - Dedicated - 4-wire 64 kbps combination - Per M			UNCDX	1L5XX	0.0098										
		Interoffice Transport - Dedicated - 4-wire 64 kbps combination - Facility Terminat			UNCDX	U1TD6	19.31	149.56	86	71.35	31.91		10.73			1.65	
		Nonrecurring Currently Combined Network Elements Switch -As-Is Char			UNCDX	UNCCC		8.1	8.1	8.1	8.1		10.73			1.65	
ADDITIONAL NETWORK ELEMENTS																	
	When used as a part of a currently combined facility, the non-recurrng charges do not apply, but a Switch As Is charge does apply.																
	When used as ordinarilty combined network elements in Georgia, the non-recurring charges apply and the Switch As Is Charge does not.																
	Node (SynchroNet)																
		Node per month			UNCDX	UNCNT	16.35										

CATEGORY	NOTES	UNBUNDLED NETWORK ELEMENT	Interim	Zone	BCS	USOC	RATES ($)					OSS RATES ($)					
												Svc Order Submitted Elec per LSR	Svc Order Submitted Manually per LSR	Incremental Charge - Manual Svc Order vs. Electronic-1st	Incremental Charge - Manual Svc Order vs. Electronic-Add'l	Incremental Charge - Manual Svc Order vs. Electronic-Disc 1st	Incremental Charge - Manual Svc Order vs. Electronic-Disc Add'l
								Nonrecurring		Nonrecurring							
										Disconnect							
							Rec	First	Add'l	First	Add'l	SOMEC	SOMAN	SOMAN	SOMAN	SOMAN	SOMAN
	Nonrecurring Currently Combined Network Elements "Switch As Is" Charge (One applies to each combination)																
		2/4-Wire VG Interoffice Channel used in a COMBINATION - "Switch As Is" Conversion Charge			UNCVX	UNCCC		8.1	8.1	8.1	8.1		10.73			1.65	
		56/64 kbps Interoffice Channel used in a COMBINATION - "Switch As Is" Conversion Charge			UNCDX	UNCCC		8.1	8.1	8.1	8.1		10.73			1.65	
		DS1 Interoffice Channel used in a COMBINATION - "Switch As Is" Conversion Charge			UNC1X	UNCCC		8.1	8.1	8.1	8.1		10.73			1.65	
		DS3 Interoffice Channel used in a COMBINATION - "Switch As Is" Conversion Charge			UNC3X	UNCCC		8.1	8.1	8.1	8.1		10.73			1.65	
		STS1 Interoffice or Local Loop used in a COMBINATION - "Switch As Is" Conversion Charge			UNCSX	UNCCC		8.1	8.1	8.1	8.1		10.73			1.65	
	NOTE: Local Channel - Dedicated Transport - minimum billing period - Below DS3=one month, DS3 and above=four months																
OPERATIONAL SUPPORT SYSTEMS																	
	NOTE: (1) Electronic Service Order: CLEC-1 should contact its contract negotiator if it prefers the state specific electronic service ordering charges as ordered by the State Commissions																
	NOTE: (1) Continued: The electronic service ordering charge currently contained in this rate exhibit is the BellSouth regional electronic service ordering charge																
	NOTE: (1) Concluded: CLEC-1 may elect either the state specific Commission ordered rates for the electronic service ordering charges, or CLEC-1 may elect the regional electronic service ordering charge.																
	NOTE: (2) Manual Service Order charge: disconnect, in the state of Florida, to be billed on a per LSR basis																
		Electronic OSS Charge, per LSR, submitted via BST's OSS interactive interfaces (Regional)				SOMEC		3.5									
UNBUNDLED LOCAL EXCHANGE SWITCHING (PORTS)																	
	Exchange Ports																
	NOTE: Although the Port Rate includes all available features in GA & TN, the desired features will need to be ordered using retail USOCs																
	2-WIRE VOICE GRADE LINE PORT RATES (RES)																
		Exchange Ports - 2-Wire Analog Line Port- Re			UEPSR	UEPRL	1.34	3.37	3.27	1.69	1.62		10.73			1.65	
		Exchange Ports - 2-Wire Analog Line Port with Caller ID - Re			UEPSR	UEPRC	1.34	3.37	3.27	1.69	1.62		10.73			1.65	
		Exchange Ports - 2-Wire Analog Line Port outgoing only - Re			UEPSR	UEPRO	1.34	3.37	3.27	1.69	1.62		10.73			1.65	
		Exchange Ports - 2-Wire VG unbundled Florida area calling with Caller ID - R			UEPSR	UEPAF	1.34	3.37	3.27	1.69	1.62		10.73			1.65	
		Exchange Ports - 2-Wire VG unbundled res, low usage line port with Caller ID (LL			UEPSR	UEPAP	1.34	3.37	3.27	1.69	1.62		10.73			1.65	
		Subsequent Activit			UEPSR	USASC	0	0	0								
	FEATURES																
		All Available Vertical Feature			UEPSR	UEPVF	2.17	0	0				10.73			1.65	
	2-WIRE VOICE GRADE LINE PORT RATES (BUS)																
		Exchange Ports - 2-Wire Analog Line Port without Caller ID - B			UEPSB	UEPBL	1.34	3.37	3.27	1.69	1.62		10.73			1.65	
		Exchange Ports - 2-Wire VG unbundled Line Port with unbundled port with Caller+E484 ID - Bus			UEPSB	UEPBC	1.34	3.37	3.27	1.69	1.62		10.73			1.65	
		Exchange Ports - 2-Wire Analog Line Port outgoing only - Bu			UEPSB	UEPBO	1.34	3.37	3.27	1.69	1.62		10.73			1.65	
		Exhange Ports - 2-Wire VG unbundled incoming only port with Caller ID - E			UEPSB	UEPB1	1.34	3.37	3.27	1.69	1.62		10.73			1.65	
		Subsequent Activit			UEPSB	USASC	0	0	0								
	FEATURES																

CATEGORY	NOTES	UNBUNDLED NETWORK ELEMENT	Interim	Zone	BCS	USOC	RATES ($)					OSS RATES ($)					
												Svc Order Submitted Elec per LSR	Svc Order Submitted Manually per LSR	Incremental Charge - Manual Svc Order vs. Electronic-1st	Incremental Charge - Manual Svc Order vs. Electronic-Add'l	Incremental Charge - Manual Svc Order vs. Electronic-Disc 1st	Incremental Charge - Manual Svc Order vs. Electronic-Disc Add'l
								Nonrecurring		Nonrecurring							
										Disconnect							
							Rec	First	Add'l	First	Add'l	SOMEC	SOMAN	SOMAN	SOMAN	SOMAN	SOMAN
		All Available Vertical Feature			UEPSB	UEPVF	2.17	0	0				10.73			1.65	
	EXCHANGE PORT RATES (DID & PBX)																
		Exchange Ports - 2-Wire DID Port			UEPEX	UEPP2	8.81	70.69	14.26	37.81	3.84		10.73			1.65	
		Exchange Ports - DDITS Port - 4-Wire DS1 Port with DID capabil			UEPDD	UEPDD	52.73	136.24	70.1	44	2.8		10.73			1.65	
		Exchange Ports - 2-Wire ISDN Port (See Notes below			UEPTX UEPSX	U1PMA	8.46	42.22	45.69	24.91	10.75		10.73			1.65	
		All Features Offered			UEPTX UEPSX	UEPVF	2.17	0	0								
	NOTE: Transmission/usage charges associated with POTS circuit switched usage will also apply to circuit switched voice and/or circuit switched data transmission by B-Channels associated with 2-wire ISDN ports.																
	NOTE: Access to B Channel or D Channel Packet capabilities will be available only through BFR/New Business Request Process. Rates for the packet capabilities will be determined via the Bona Fide Request/New Business Request Process.																
		Exchange Ports - 2-Wire ISDN Port -- Channel Profiles			UEPTX UEPSX	U1UMA	0	0	0								
		Exchange Ports - 4-Wire ISDN DS1 Por			UEPEX	UEPEX	79.35	157.42	85.8	44.89	16.43		10.73			1.65	
		2-Wire VG Unbundled 2-Way PBX Trunk - Re			UEPSE	UEPRD	1.34	35.22	16.39	11.14	0.648		10.73			1.65	
		2-Wire VG Line Side Unbundled 2-Way PBX Trunk - Bu			UEPSP	UEPPC	1.34	35.22	16.39	11.14	0.648		10.73			1.65	
		2-Wire VG Line Side Unbundled Outward PBX Trunk - Bu			UEPSP	UEPPO	1.34	35.22	16.39	11.14	0.648		10.73			1.65	
		2-Wire VG Line Side Unbundled Incoming PBX Trunk - Bu			UEPSP	UEPP1	1.34	35.22	16.39	11.14	0.648		10.73			1.65	
		2-Wire Analog Long Distance Terminal PBX Trunk - Bu			UEPSP	UEPLD	1.34	35.22	16.39	11.14	0.648		10.73			1.65	
		2-Wire Voice Unbundled PBX LD Terminal Port			UEPSP	UEPLD	1.34	35.22	16.39	11.14	0.648		10.73			1.65	
		2-Wire Vice Unbundled 2-Way PBX Usage Po			UEPSP	UEPXA	1.34	35.22	16.39	11.14	0.648		10.73			1.65	
		2-Wire Voice Unbundled PBX Toll Terminal Hotel Por			UEPSP	UEPXB	1.34	35.22	16.39	11.14	0.648		10.73			1.65	
		2-Wire Voice Unbundled PBX LD DDD Terminals Pc			UEPSP	UEPXC	1.34	35.22	16.39	11.14	0.648		10.73			1.65	
		2-Wire Voice Unbundled PBX LD Terminal Switchboard Pc			UEPSP	UEPXD	1.34	35.22	16.39	11.14	0.648		10.73			1.65	
		2-Wire Voice Unbundled PBX LD Terminal Switchboard IDD Capable Pc			UEPSP	UEPXE	1.34	35.22	16.39	11.14	0.648		10.73			1.65	
		2-Wire Voice Unbundled 2-Way PBX Hotel/Hospital Economy Administrative Calling Port			UEPSP	UEPXL	1.34	35.22	16.39	11.14	0.648		10.73			1.65	
		2-Wire Voice Unbundled 2-Way PBX Hotel/Hospital Economy Room Calling P			UEPSP	UEPXM	1.34	35.22	16.39	11.14	0.648		10.73			1.65	
		2-Wire Voice Unbundled 1-Way Outgoing PBX Hotel/Hospital Discount Room Calling Port			UEPSP	UEPXO	1.34	35.22	16.39	11.14	0.648		10.73			1.65	
		2-Wire Voice Unbundled 1-Way Outgoing PBX Measured Pc			UEPSP	UEPXS	1.34	35.22	16.39	11.14	0.648		10.73			1.65	
		Subsequent Activity			UEPSP	USASC	0	0	0								
	FEATURES																
		All Available Vertical Feature			UEPSE	UEPVF	2.17	0	0				10.73			1.65	
	EXCHANGE PORT RATES (COIN)																
		Exchange Ports - Coin Por					1.34	3.37	3.27	1.69	1.62		10.73			1.65	
	NOTE: Transmission/usage charges associated with POTS circuit switched usage will also apply to circuit switched voice and/or circuit switched data transmission by B-Channels associated with 2-wire ISDN ports.																
	NOTE: Access to B Channel or D Channel Packet capabilities will be available only through BFR/New Business Request Process. Rates for the packet capabilities will be determined via the Bona Fide Request/New Business Request Process.																
UNBUNDLED LOCAL SWITCHING, PORT USAGE																	
	End Office Switching (Port Usage)																
		End Office Switching Function, Per MO					0.0007341										
		End Office Trunk Port - Shared, Per MOI					0.0001571										

CATEGORY	NOTES	UNBUNDLED NETWORK ELEMENT	Interim	Zone	BCS	USOC	RATES ($)					OSS RATES ($)					
												Svc Order Submitted Elec per LSR	Svc Order Submitted Manually per LSR	Incremental Charge - Manual Svc Order vs. Electronic-1st	Incremental Charge - Manual Svc Order vs. Electronic-Add'l	Incremental Charge - Manual Svc Order vs. Electronic-Disc 1st	Incremental Charge - Manual Svc Order vs. Electronic-Disc Add'l
								Nonrecurring		Nonrecurring							
										Disconnect							
							Rec	First	Add'l	First	Add'l	SOMEC	SOMAN	SOMAN	SOMAN	SOMAN	SOMAN
	Tandem Switching (Port Usage) (Local or Access Tandem)																
		Tandem Switching Function Per MOI					0.0001263										
		Tandem Trunk Port - Shared, Per MOU					0.0002252										
	Common Transport																
		Common Transport - Per Mile, Per MOU					0.0000034										
		Common Transport - Facilities Termination Per MO					0.0004493										
UNBUNDLED PORT/LOOP COMBINATIONS - COST BASED RATES																	
	Cost Based Rates are applied where BellSouth is required by FCC and/or State Commission rule to provide Unbundled Local Switching or Switch Ports.																
	Features shall apply to the Unbundled Port/Loop Combination - Cost Based Rate section in the same manner as they are applied to the Stand-Alone Unbundled Port section of this Rate Exhibit.																
	End Office and Tandem Switching Usage and Common Transport Usage rates in the Port section of this rate exhibit shall apply to all combinations of loop/port network elements except for UNE Coin Port/Loop Combinations.																
	For Georgia, the recurring UNE Port and Loop charges listed apply to Currently Combined and Not Currently Combined Combos and the first and additional Port nonrecurring charges apply to Not Currently Combined Combos. For Currently Combined Combos in GA and all other states, the nonrecurring charges shall be those identified in the Nonrecurring - Currently Combined sections.																
	2-WIRE VOICE GRADE LOOP WITH 2-WIRE LINE PORT (RES																
	UNE Port/Loop Combination Rates																
		2-Wire VG Loop/Port Combo - Zone 1		1			13.01										
		2-Wire VG Loop/Port Combo - Zone 2		2			17.15										
		2-Wire VG Loop/Port Combo - Zone 3		3			30.45										
	UNE Loop Rates																
		2-Wire Voice Grade Loop (SL1) - Zone 1		1	UEPRX	UEPLX	11.89										
		2-Wire Voice Grade Loop (SL1) - Zone 2		2	UEPRX	UEPLX	16.03										
		2-Wire Voice Grade Loop (SL1) - Zone 3		3	UEPRX	UEPLX	29.33										
	2-Wire Voice Grade Line Port Rates (Res)																
		2-Wire voice unbundled port - residenc			UEPRX	UEPRL	1.12						10.73			1.65	
		2-Wire voice unbundled port with Caller ID - re			UEPRX	UEPRC	1.12						10.73			1.65	
		2-Wire voice unbundled port outgoing only - re			UEPRX	UEPRO	1.12						10.73			1.65	
		2-Wire voice unbundled Florida Area Calling with Caller ID - r			UEPRX	UEPAF	1.12						10.73			1.65	
		2-Wire voice unbundles res, low usage line port with Caller ID (LU			UEPRX	UEPAP	1.12						10.73			1.65	
	FEATURES																
		All Features Offered			UEPRX	UEPVF	2.17	0	0				10.73			1.65	
	LOCAL NUMBER PORTABILITY																
		Local Number Portability (1 per port			UEPRX	LNPCX	0.35										
	NONRECURRING CHARGES (NRCs) - CURRENTLY COMBINED																
		2-Wire Voice Grade Loop / Line Port Combination - Conversion - Switch-as			UEPRX	USAC2		0.092	0.092				10.73				
		2-Wire Voice Grade Loop / Line Port Combination - Conversion - Switch with char			UEPRX	USACC		0.092	0.092				10.73				
	ADDITIONAL NRCs																
		2-Wire Voice Grade Loop/Line Port Combination - Subsequent Activ			UEPRX	USAS2	0	0	0								
	2-WIRE VOICE GRADE LOOP WITH 2-WIRE LINE PORT (BUS)																

CATEGORY	NOTES	UNBUNDLED NETWORK ELEMENT	Interim	Zone	BCS	USOC	RATES ($)					OSS RATES ($)					
												Svc Order Submitted Elec per LSR	Svc Order Submitted Manually per LSR	Incremental Charge - Manual Svc Order vs. Electronic-1st	Incremental Charge - Manual Svc Order vs. Electronic-Add'l	Incremental Charge - Manual Svc Order vs. Electronic-Disc 1st	Incremental Charge - Manual Svc Order vs. Electronic-Disc Add'l
								Nonrecurring		Nonrecurring							
										Disconnect							
							Rec	First	Add'l	First	Add'l	SOMEC	SOMAN	SOMAN	SOMAN	SOMAN	SOMAN
	UNE Port/Loop Combination Rates																
		2-Wire VG Loop/Port Combo - Zone 1		1			13.01										
		2-Wire VG Loop/Port Combo - Zone 2		2			17.15										
		2-Wire VG Loop/Port Combo - Zone 3		3			30.45										
	UNE Loop Rates																
		2-Wire Voice Grade Loop (SL1) - Zone 1		1	UEPBX	UEPLX	11.89										
		2-Wire Voice Grade Loop (SL1) - Zone 2		2	UEPBX	UEPLX	16.03										
		2-Wire Voice Grade Loop (SL1) - Zone 3		3	UEPBX	UEPLX	29.33										
	2-Wire Voice Grade Line Port (Bus)																
		2-Wire voice unbundled port without Caller ID - b			UEPBX	UEPBL	1.12						10.73			1.65	
		2-Wire voice unbundled port with Caller + E484 ID - b			UEPBX	UEPBC	1.12						10.73			1.65	
		2-Wire voice unbundled port outgoing only - b			UEPBX	UEPBO	1.12						10.73			1.65	
		2-Wire voice unbundled incoming only port with Caller ID - B			UEPBX	UPEB1	1.12						10.73			1.65	
	LOCAL NUMBER PORTABILITY																
		Local Number Portability (1 per port			UEPBX	LNPCX	0.35										
	FEATURES																
		All Features Offered			UEPBX	UEPVF	2.17	0	0				10.73			1.65	
	NONRECURRING CHARGES (NRCs) - CURRENTLY COMBINED																
		2-Wire Voice Grade Loop / Line Port Combination - Conversion - Switch-as			UEPBX	USAC2		0.092	0.092				10.73			1.65	
		2-Wire Voice Grade Loop / Line Port Combination - Conversion - Switch with char			UEPBX	USACC		0.092	0.092								
	ADDITIONAL NRCs																
		2-Wire Voice Grade Loop/Line Port Combination - Subsequent Activ			UEPBX	USAS2							10.73				
	2-WIRE VOICE GRADE LOOP WITH 2-WIRE LINE PORT (RES - PBX)																
	UNE Port/Loop Combination Rates																
		2-Wire VG Loop/Port Combo - Zone 1		1			13.01										
		2-Wire VG Loop/Port Combo - Zone 2		2			17.15										
		2-Wire VG Loop/Port Combo - Zone 3		3			30.45										
	UNE Loop Rates																
		2-Wire Voice Grade Loop (SL 1) - Zone 1		1	UEPRG	UEPLX	11.89										
		2-Wire Voice Grade Loop (SL 1) - Zone 2		2	UEPRG	UEPLX	16.03										
		2-Wire Voice Grade Loop (SL 1) - Zone 3		3	UEPRG	UEPLX	29.33										
	2-Wire Voice Grade Line Port Rates (RES - PBX)																
		2-Wire VG Unbundled Combination 2-Way PBX Trunk Port - R			UEPRG	UEPRD	1.12						10.73			1.65	
	LOCAL NUMBER PORTABILITY																
		Local Number Portability (1 per port			UEPRG	LNPCP	3.5										
	FEATURES																
		All Features Offered			UEPRG	UEPVF	2.17	0	0				10.73			1.65	
	NONRECURRING CHARGES (NRCs) - CURRENTLY COMBINED																

CATEGORY	NOTES	UNBUNDLED NETWORK ELEMENT	Interim	Zone	BCS	USOC	RATES ($)					OSS RATES ($)					
												Svc Order Submitted Elec per LSR	Svc Order Submitted Manually per LSR	Incremental Charge - Manual Svc Order vs. Electronic-1st	Incremental Charge - Manual Svc Order vs. Electronic-Add'l	Incremental Charge - Manual Svc Order vs. Electronic-Disc 1st	Incremental Charge - Manual Svc Order vs. Electronic-Disc Add'l
								Nonrecurring		Nonrecurring							
										Disconnect							
							Rec	First	Add'l	First	Add'l	SOMEC	SOMAN	SOMAN	SOMAN	SOMAN	SOMAN
		2-Wire Voice Grade Loop/ Line Port Combination (PBX) - Conversion - Switch-As			UEPRG	USAC2		7.62	1.72				10.73				
		2-Wire Voice Grade Loop/ Line Port Combination (PBX) - Conversion - Switch with Change			UEPRG	USACC		7.62	1.72				10.73				
	ADDITIONAL NRCs																
		2-Wire Voice Grade Loop/ Line Port Combination (PBX) - Subsequent Activ			UEPRG	USAS2	0	0	0								
		PBX Subsequent Activity - Change/Rearrange Multiline Hunt Gro						7.09	7.09				10.73			1.65	
	2-WIRE VOICE GRADE LOOP WITH 2-WIRE LINE PORT (BUS - PBX)																
	UNE Port/Loop Combination Rates																
		2-Wire VG Loop/Port Combo - Zone 1		1			13.01										
		2-Wire VG Loop/Port Combo - Zone 2		2			17.15										
		2-Wire VG Loop/Port Combo - Zone 3		3			30.45										
	UNE Loop Rates																
		2-Wire Voice Grade Loop (SL 1) - Zone 1		1	UEPPX	UEPLX	11.89										
		2-Wire Voice Grade Loop (SL 1) - Zone 2		2	UEPPX	UEPLX	16.03										
		2-Wire Voice Grade Loop (SL 1) - Zone 3		3	UEPPX	UEPLX	29.33										
	2-Wire Voice Grade Line Port Rates (BUS - PBX)																
		Line Side Unbundled Combination 2-Way PBX Trunk Port - Bu			UEPPX	UEPPC	1.12						10.73			1.65	
		Line Side Unbundled Outward PBX Trunk Port - Bu			UEPPX	UEPPO	1.12						10.73			1.65	
		Line Side Unbundled Incoming PBX Trunk Port - Bu			UEPPX	UEPP1	1.12						10.73			1.65	
		2-Wire Voice Unbundled PBX LD Terminal Port			UEPPX	UEPLD	1.12						10.73			1.65	
		2-Wire Voice Unbundled 2-Way Combination PBX Usage Pc			UEPPX	UEPXA	1.12						10.73			1.65	
		2-Wire Voice Unbundled PBX Toll Terminal Hotel Por			UEPPX	UEPXB	1.12						10.73			1.65	
		2-Wire Voice Unbundled PBX LD DDD Terminals Pc			UEPPX	UEPXC	1.12						10.73			1.65	
		2-Wire Voice Unbundled PBX LD Terminal Switchboard Pc			UEPPX	UEPXD	1.12						10.73			1.65	
		2-Wire Voice Unbundled PBX LD Terminal Switchboard IDD Capable Pc			UEPPX	UEPXE	1.12						10.73			1.65	
		2-Wire Voice Unbundled 2-Way PBX Hotel/Hospital Economy Administrative Calling Port			UEPPX	UEPXL	1.12						10.73			1.65	
		2-Wire Voice Unbundled 2-Way PBX Hotel/Hospital Economy Room Calling P			UEPPX	UEPXM	1.12						10.73			1.65	
		2-Wire Voice Unbundled 1-Way Outgoing PBX Hotel/Hospital Discount Room Calling Port			UEPPX	UEPXO	1.12						10.73			1.65	
		2-Wire Voice Unbundled 1-Way Outgoing PBX Measured Pc			UEPPX	UEPXS	1.12						10.73			1.65	
	LOCAL NUMBER PORTABILITY																
		Local Number Portability (1 per port			UEPPX	LNPCP	3.15										
	FEATURES																
		All Features Offered			UEPPX	UEPVF	2.17	0	0				10.73			1.65	
	NONRECURRING CHARGES (NRCs) - CURRENTLY COMBINED																
		2-Wire Voice Grade Loop/ Line Port Combination (PBX) - Conversion - Switch-As			UEPPX	USAC2		7.62	1.72				10.73			1.65	
		2-Wire Voice Grade Loop/ Line Port Combination (PBX) - Conversion - Switch with Change			UEPPX	USACC		7.62	1.72				10.73			1.65	
	ADDITIONAL NRCs																
		2-Wire Voice Grade Loop/ Line Port Combination (PBX) - Subsequent Activ			UEPPX	USAS2	0	0	0								

CATEGORY	NOTES	UNBUNDLED NETWORK ELEMENT	Interim	Zone	BCS	USOC	RATES ($)					OSS RATES ($)					
												Svc Order Submitted Elec per LSR	Svc Order Submitted Manually per LSR	Incremental Charge - Manual Svc Order vs. Electronic-1st	Incremental Charge - Manual Svc Order vs. Electronic-Add'l	Incremental Charge - Manual Svc Order vs. Electronic-Disc 1st	Incremental Charge - Manual Svc Order vs. Electronic-Disc Add'l
								Nonrecurring		Nonrecurring							
										Disconnect							
							Rec	First	Add'l	First	Add'l	SOMEC	SOMAN	SOMAN	SOMAN	SOMAN	SOMAN
		PBX Subsequent Activity - Change/Rearrange Multiline Hunt Gro						7.09	7.09				10.73			1.65	
	2-WIRE VOICE GRADE LOOP WITH 2-WIRE ANALOG LINE COIN PORT																
	UNE Port/Loop Combination Rates																
		2-Wire VG Coin Port/Loop Combo – Zone 1					13.01										
		2-Wire VG Coin Port/Loop Combo – Zone 2					17.15										
		2-Wire VG Coin Port/Loop Combo – Zone 3					30.45										
	UNE Loop Rates																
		2-Wire Voice Grade Loop (SL1) - Zone :			UEPCO	UEPLX	11.89										
		2-Wire Voice Grade Loop (SL1) - Zone :			UEPCO	UEPLX	16.03										
		2-Wire Voice Grade Loop (SL1) - Zone :			UEPCO	UEPLX	29.33										
	2-Wire Voice Grade Line Ports (COIN)																
		2-Wire Coin 2-Way with Operator Screening and Blocking: 011, 900/976, 1+DDD (FL)			UEPCO	UEP2F	1.12						10.73			1.65	
		2-Wire Coin 2-Way with Operator Screening and 011 Blocking (FL)			UEPCO	UEPFA	1.12						10.73			1.65	
		2-Wire Coin 2-Way with Operator Screening and Blocking: 900/976, 1+DDD, 011+, and Local (FL)			UEPCO	UEPCG	1.12						10.73			1.65	
		2-Wire Coin Outward with Operator Screening and 011 Blocking (AL, FL)			UEPCO	UEPRK	1.12						10.73			1.65	
		2-Wire Coin Outward with Operator Screening and Blocking: 900/976, 1+DDD, 011+ (FL)			UEPCO	UEPOF	1.12						10.73			1.65	
		2-Wire Coin Outward with Operator Screening and Blocking: 900/976, 1+DDD, 011+, and Local (FL, GA)			UEPCO	UEPCQ	1.12						10.73			1.65	
		2-Wire 2-Way Smartline with 900/976 (all states except LA)			UEPCO	UEPCK	1.12						10.73			1.65	
		2-Wire Coin Outward Smartline with 900/976 (all states except LA)			UEPCO	UEPCR	1.12						10.73			1.65	
	ADDITIONAL UNE COIN PORT/LOOP (RC)																
		UNE Coin Port/Loop Combo Usage (Flat Rate			UEPCO	URECU	1.86	0	0								
	LOCAL NUMBER PORTABILITY																
		Local Number Portability (1 per port			UEPCO	LNPCX	0.35										
	NONRECURRING CHARGES - CURRENTLY COMBINED																
		2-Wire Voice Grade Loop / Line Port Combination - Conversion - Switch-as			UEPCO	USAC2		0.092	0.092				10.73			1.65	
		2-Wire Voice Grade Loop / Line Port Combination - Conversion - Switch with char			UEPCO	USACC		0.092	0.092				10.73			1.65	
	ADDITIONAL NRCs																
		2-Wire Voice Grade Loop/Line Port Combination - Subsequent Activ			UEPCO	USAS2		0	0				10.73				
	2-WIRE VOICE GRADE LOOP- BUS ONLY - WITH 2-WIRE DID TRUNK PORT																
	UNE Port/Loop Combination Rates																
		2-Wire VG Loop/2-Wire DID Trunk Port Combo - UNE Zone		1			22.22										
		2-Wire VG Loop/2-Wire DID Trunk Port Combo - UNE Zone		2			27.39										
		2-Wire VG Loop/2-Wire DID Trunk Port Combo - UNE Zone		3			43.79										
	UNE Loop Rates																
		2-Wire Analog Voice Grade Loop - (SL2) - UNE Zone		1	UEPPX	UECD1	13.43	122.38	74.35	57.28	10.83		10.73			1.65	

CATEGORY	NOTES	UNBUNDLED NETWORK ELEMENT	Interim	Zone	BCS	USOC	RATES ($)					OSS RATES ($)					
												Svc Order Submitted Elec per LSR	Svc Order Submitted Manually per LSR	Incremental Charge - Manual Svc Order vs. Electronic-1st	Incremental Charge - Manual Svc Order vs. Electronic-Add'l	Incremental Charge - Manual Svc Order vs. Electronic-Disc 1st	Incremental Charge - Manual Svc Order vs. Electronic-Disc Add'l
								Nonrecurring		Nonrecurring							
										Disconnect							
							Rec	First	Add'l	First	Add'l	SOMEC	SOMAN	SOMAN	SOMAN	SOMAN	SOMAN
		2-Wire Analog Voice Grade Loop - (SL2) - UNE Zone		2	UEPPX	UECD1	18.6	122.38	74.35	57.28	10.83		10.73			1.65	
		2-Wire Analog Voice Grade Loop - (SL2) - UNE Zone		3	UEPPX	UECD1	35.18	122.38	74.35	57.28	10.83		10.73			1.65	
	UNE Port Rate																
		Exchange Ports - 2-Wire DID Por			UEPPX	UEPD1	8.79	70.69	14.26	37.81	3.84		10.73			1.65	
	NONRECURRING CHARGES - CURRENTLY COMBINED																
		2-Wire Voice Grade Loop / 2-Wire DID Trunk Port Combination - Switch-as			UEPPX	USAC1		7.08	1.69				10.73			1.65	
		2-Wire Voice Grade Loop / 2-Wire DID Trunk Port Conversion with BellSouth Allowable Changes			UEPPX	USA1C		7.08	1.69				10.73			1.65	
	ADDITIONAL NRCs																
		2-Wire DID Subsequent Activity - Add Trunks, Per Trui			UEPPX	USAS1		29.08	29.08				10.73			1.65	
	Telephone Number/Trunk Group Establisment Charges																
		DID Trunk Termination (One Per Por			UEPPX	NDT	0	0	0				10.73			1.65	
		DID Numbers, Establish Trunk Group and Provide First Group of 20 DID Numbe			UEPPX	NDZ	0	0	0				10.73			1.65	
		Additional DID Numbers for each Group of 20 DID Numbe			UEPPX	ND4	0	0	0				10.73			1.65	
		DID Numbers, Non- consecutive DID Numbers , Per Numbe			UEPPX	ND5	0	0	0				10.73			1.65	
		Reserve Non-Consecutive DID number			UEPPX	ND6	0	0	0				10.73			1.65	
		Reserve DID Numbers			UEPPX	NDV	0	0	0				10.73			1.65	
	LOCAL NUMBER PORTABILITY																
		Local Number Portability (1 per port			UEPPX	LNPCP	3.15										
	2-WIRE ISDN DIGITAL GRADE LOOP WITH 2-WIRE ISDN DIGITAL LINE SIDE PORT																
	UNE Port/Loop Combination Rates																
		2W ISDN Digital Grade Loop/2W ISDN Digital Line Side Port - UNE Zone		1	UEPPB UEPPR		30.29										
		2W ISDN Digital Grade Loop/2W ISDN Digital Line Side Port - UNE Zone		2	UEPPB UEPPR		36.51										
		2W ISDN Digital Grade Loop/2W ISDN Digital Line Side Port - UNE Zone		3	UEPPB UEPPR		56.45										
	UNE Loop Rates																
		2-Wire ISDN Digital Grade Loop - UNE Zone		1	UEPPB UEPPR	USL2X	23.22	133.15	85.12	56.1	9.65		10.73			1.65	
		2-Wire ISDN Digital Grade Loop - UNE Zone		2	UEPPB UEPPR	USL2X	29.44	133.15	85.12	56.1	9.65		10.73			1.65	
		2-Wire ISDN Digital Grade Loop - UNE Zone		3	UEPPB UEPPR	USL2X	49.38	133.15	85.12	56.1	9.65		10.73			1.65	
	UNE Port Rate																
		Exchange Port - 2-Wire ISDN Line Side Po			UEPPB UEPPR	UEPPB	7.07	42.22	45.69	24.91	10.75		10.73			1.65	
	NONRECURRING CHARGES - CURRENTLY COMBINED																
		2-Wire ISDN Digital Grade Loop / 2-Wire ISDN Line Side Port Combination - Conversior			UEPPB UEPPR	USACB	0	27.61	15.33				10.73			1.65	
	ADDITIONAL NRCs																
	LOCAL NUMBER PORTABILITY																
		Local Number Portability (1 per port			UEPPB UEPPR	LNPCX	0.35	0	0								
	B-CHANNEL USER PROFILE ACCESS:																

CATEGORY	NOTES	UNBUNDLED NETWORK ELEMENT	Interim	Zone	BCS	USOC	RATES ($)					OSS RATES ($)					
												Svc Order Submitted Elec per LSR	Svc Order Submitted Manually per LSR	Incremental Charge - Manual Svc Order vs. Electronic-1st	Incremental Charge - Manual Svc Order vs. Electronic-Add'l	Incremental Charge - Manual Svc Order vs. Electronic-Disc 1st	Incremental Charge - Manual Svc Order vs. Electronic-Disc Add'l
								Nonrecurring		Nonrecurring							
										Disconnect							
							Rec	First	Add'l	First	Add'l	SOMEC	SOMAN	SOMAN	SOMAN	SOMAN	SOMAN
		CVS/CSD (DMS/5ESS)			UEPPB UEPPR	U1UCA	0	0	0								
		CVS (EWSD)			UEPPB UEPPR	U1UCB	0	0	0								
		CSD			UEPPB UEPPR	U1UCC	0	0	0								
	B-CHANNEL AREA PLUS USER PROFILE ACCESS: (AL,KY,LA,MS SC,MS, & TN)																
	USER TERMINAL PROFILE																
		User Terminal Profile (EWSD only)			UEPPR	U1UMA	0	0	0								
	VERTICAL FEATURES																
		All Vertical Features - One per Channel B User Profile			UEPPB UEPPR	UEPVF	2.17	0	0								
	INTEROFFICE CHANNEL MILEAGE																
		Interoffice Channel mileage each, including first mile and facilities termination			UEPPB UEPPR	M1GNC	19.79	42.69	28.66	16.51	6.34		10.73			1.65	
		Interoffice Channel mileage each, additional mile			UEPPB UEPPR	M1GNM	0.0084	0	0				10.73			1.65	
	4-WIRE DS1 DIGITAL LOOP WITH 4-WIRE ISDN DS1 DIGITAL TRUNK PORT																
	UNE Port/Loop Combination Rates																
		4W DS1 Digital Loop/4W ISDN DS1 Digital Trunk Port - UNE Zone		1	UEPPP		148.57										
		4W DS1 Digital Loop/4W ISDN DS1 Digital Trunk Port - UNE Zone		2	UEPPP		175.24										
		4W DS1 Digital Loop/4W ISDN DS1 Digital Trunk Port - UNE Zone		3	UEPPP		260.73										
	UNE Loop Rates																
		4-Wire DS1 Digital Loop - UNE Zone		1	UEPPP	USL4P	69.22	282.15	163.51	47.4	10.22		10.73			1.65	
		4-Wire DS1 Digital Loop - UNE Zone		2	UEPPP	USL4P	95.89	282.15	163.51	47.4	47.4		10.73			1.65	
		4-Wire DS1 Digital Loop - UNE Zone		3	UEPPP	USL4P	181.38	282.15	163.51	47.4	10.22		10.73			1.65	
	UNE Port Rate																
		Exchange Ports - 4-Wire ISDN DS1 Por			UEPPP	UEPPP	79.35	157.42	85.8	44.89	16.43		10.73			1.65	
	NONRECURRING CHARGES - CURRENTLY COMBINED																
		4-Wire DS1 Digital Loop / 4-Wire ISDN DS1 Digital Trunk Port Combination - Conversion -Switch-as-i			UEPPP	USACP	0	61.25	55.34				10.73			1.65	
	ADDITIONAL NRCs																
		4-Wire DS1 Loop/4-W ISDN Digtl Trk Port - Subsqt Actvy- Inward/two way tel nos within Std Allowanc			UEPPP	PR7TF		0.4879					10.73			1.65	
		4-Wire DS1 Loop / 4-Wire ISDN DS1 Digital Trunk Port - Outward Tel Numbers (All States except NC)			UEPPP	PR7TO		11.46	11.46				10.73			1.65	
		4-Wire DS1 Loop / 4-Wire ISDN DS1 Digital Trk Port - Subsequent Inward Tel Nos Above Std Allowanc			UEPPP	PR7ZT		22.92	22.92				10.73			1.65	
	LOCAL NUMBER PORTABILITY																
		Local Number Portability (1 per port			UEPPP	LNPCN	1.75										
	INTERFACE (Provsioning Only)																
		Voice/Data			UEPPP	PR71V	0	0	0								
		Digital Data			UEPPP	PR71D	0	0	0								
		Inward Data			UEPPP	PR71E	0	0	0								

CATEGORY	NOTES	UNBUNDLED NETWORK ELEMENT	Interim	Zone	BCS	USOC	RATES ($)					OSS RATES ($)					
												Svc Order Submitted Elec per LSR	Svc Order Submitted Manually per LSR	Incremental Charge - Manual Svc Order vs. Electronic-1st	Incremental Charge - Manual Svc Order vs. Electronic-Add'l	Incremental Charge - Manual Svc Order vs. Electronic-Disc 1st	Incremental Charge - Manual Svc Order vs. Electronic-Disc Add'l
								Nonrecurring		Nonrecurring							
										Disconnect							
							Rec	First	Add'l	First	Add'l	SOMEC	SOMAN	SOMAN	SOMAN	SOMAN	SOMAN
	New or Additional "B" Channel																
		New or Additional - Voice/Data B Channel			UEPPP	PR7BV	0	13.96					10.73			1.65	
		New or Additional - Digital Data B Channel			UEPPP	PR7BF	0	13.96					10.73			1.65	
		New or Additional Inward Data B Channel			UEPPP	PR7BD	0	13.96					10.73			1.65	
		New or Additional Useage Sensitive Voice Data B Channel			UEPPP	PR7BS	0	13.96					10.73			19.99	
		New or Additional Useage Sensitive Digital Data B Channel			UEPPP	PR7BU	0	13.96					10.73			1.65	
	CALL TYPES																
		Inward			UEPPP	PR7C1	0	0	0								
		Outward			UEPPP	PR7C0	0	0	0								
		Two-way			UEPPP	PR7CC	0	0	0								
	Interoffice Channel Mileage																
		Fixed Each Including First Mil			UEPPP	1LN1A	91.04	95.15	88.78	16.74	14.85		10.73			1.65	
		Each Airline-Fractional Additional Mi			UEPPP	1LN1B	0.171										
	4-WIRE DS1 DIGITAL LOOP WITH 4-WIRE DDITS TRUNK PORT																
	UNE Port/Loop Combination Rates																
		4W DS1 Digital Loop/4W DDITS Trunk Port - UNE Zone		1	UEPDC		121.95						10.73			1.65	
		4W DS1 Digital Loop/4W DDITS Trunk Port - UNE Zone		2	UEPDC		148.62						10.73			1.65	
		4W DS1 Digital Loop/4W DDITS Trunk Port - UNE Zone		3	UEPDC		234.11						10.73			1.65	
	UNE Loop Rates																
		4-Wire DS1 Digital Loop - UNE Zone		1	UEPDC	USLDC	69.22	282.15	163.51	47.4	10.22		10.73			1.65	
		4-Wire DS1 Digital Loop - UNE Zone		2	UEPDC	USLDC	95.89	282.15	163.51	47.4	10.22		10.73			1.65	
		4-Wire DS1 Digital Loop - UNE Zone		3	UEPDC	USLDC	181.38	282.15	163.51	47.4	10.22		10.73			1.65	
	UNE Port Rate																
		4-Wire DDITS Digital Trunk Po			UEPDC	UDD1T	52.73	136.24	70.1	44	2.8		10.73			1.65	
	NONRECURRING CHARGES - CURRENTLY COMBINED																
		4-Wire DS1 Digital Loop / 4-Wire DDITS Trunk Port Combination - Switch-as			UEPDC	USAC4		71.29	42.11				10.73			1.65	
		4-Wire DS1 Digital Loop / 4-Wire DDITS Trunk Port Combination - Conversion with DS1 Changes			UEPDC	USAWA		71.29	42.11				10.73			1.65	
		4-Wire DS1 Digital Loop / 4-Wire DDITS Trunk Port Combination - Conversion with Change - Trunk			UEPDC	USAWB		71.29	42.11				10.73			1.65	
	ADDITIONAL NRCs																
		4-Wire DS1 Loop / 4-Wire DDITS Trunk Port - NRC - Subsequent Channel Activation/Chan - 2-Way Trun			UEPDC	UDTTA		14.14	14.14				10.73			1.65	
		4-Wire DS1 Loop / 4-Wire DDITS Trunk Port - Subsequent Channel Activation/Chan - 1-Way Outward Trunk			UEPDC	UDTTB		14.14	14.14				10.73			1.65	
		4-Wire DS1 Loop / 4-Wire DDITS Trunk Port - Subsqnt Channel Activation/Chan Inward Trunk w/out DI			UEPDC	UDTTC		14.14	14.14				10.73			1.65	
		4-Wire DS1 Loop / 4-Wire DDITS Trunk Port - Subsqnt Chan Activation Per Chan - Inward Trunk with DI			UEPDC	UDTTD		14.14	14.14				10.73			1.65	
		4-Wire DS1 Loop / 4-Wire DDITS Trunk Port - Subsqnt Chan Activation / Chan - 2-Way DID w User Trans			UEPDC	UDTTE		14.14	14.14				10.73			1.65	
	BIPOLAR 8 ZERO SUBSTITUTION																
		B8ZS -Superframe Format			UEPDC	CCOSF		0	655				10.73			1.65	

CATEGORY	NOTES	UNBUNDLED NETWORK ELEMENT	Interim	Zone	BCS	USOC	RATES ($)					OSS RATES ($)					
												Svc Order Submitted Elec per LSR	Svc Order Submitted Manually per LSR	Incremental Charge - Manual Svc Order vs. Electronic-1st	Incremental Charge - Manual Svc Order vs. Electronic-Add'l	Incremental Charge - Manual Svc Order vs. Electronic-Disc 1st	Incremental Charge - Manual Svc Order vs. Electronic-Disc Add'l
								Nonrecurring		Nonrecurring							
										Disconnect							
							Rec	First	Add'l	First	Add'l	SOMEC	SOMAN	SOMAN	SOMAN	SOMAN	SOMAN
		B8ZS - Extended Superframe Format			UEPDC	CCOEF		0	655				10.73			1.65	
	Alternate Mark Inversion																
		AMI -Superframe Format			UEPDC	MCOSF		0	0								
		AMI - Extended SuperFrame Forma			UEPDC	MCOPO		0	0								
	Telephone Number/Trunk Group Establisment Charges																
		Telephone Number for 2-Way Trunk Grou			UEPDC	UDTGX	0						10.73				
		Telephone Number for 1-Way Outward Trunk Grou			UEPDC	UDTGY	0						10.73				
		Telephone Number for 1-Way Inward Trunk Group Without D			UEPDC	UDTGZ	0						10.73				
		DID Numbers, Establish Trunk Group and Provide First Group of 20 DID Numbe			UEPDC	NDZ	0	0	0				10.73				
		DID Numbers for each Group of 20 DID Number			UEPDC	ND4	0						10.73				
		DID Numbers, Non- consecutive DID Numbers , Per Numbe			UEPDC	ND5	0						10.73				
		Reserve Non-Consecutive DID Nos			UEPDC	ND6	0	0	0				10.73				
		Reserve DID Numbers			UEPDC	NDV	0	0	0				10.73				
	Dedicated DS1 (Interoffice Channel Mileage) - FX/FCO for 4-Wire DS1 Digital Loop with 4-Wire DDITS Trunk Port																
		Interoffice Channel Mileage - Fixed rate 0-8 miles (Facilities Terminati			UEPDC	1LNO1	90.87	95.16	88.78	16.74	14.85		10.73			1.65	
		Interoffice Channel Mileage - Additional rate per mile - 0-8 mil			UEPDC	1LNOA	0.171	0	0								
		Interoffice Channel Mileage - Fixed rate 9-25 miles (Facilities Terminati			UEPDC	1LNO2	0	0	0								
		Interoffice Channel Mileage - Additional rate per mile - 9-25 mil			UEPDC	1LNOB	0.171	0	0								
		Interoffice Channel Mileage - Fixed rate 25+ miles (Facilities Terminati			UEPDC	1LNO3	0	0	0	0							
		Interoffice Channel Mileage - Additional rate per mile - 25+ mil			UEPDC	1LNOC	0.171	0	0								
		Local Number Portability, per DS0 Activate			UEPDC	LNPCP	3.15	0	0	0							
		Central Office Termininating Poi			UEPDC	CTG	0										
	4-WIRE DS1 LOOP WITH CHANNELIZATION WITH PORT																
	System is 1 DS1 Loop, 1 D4 Channel Bank, and up to 24 Feature Activations																
	Each System can have up to 24 combinations of rates depending on type and number of ports used																
	UNE DS1 Loop																
		4-Wire DS1 Loop - UNE Zone 1			UEPMG	USLDC	69.22	0	0								
		4-Wire DS1 Loop - UNE Zone 2			UEPMG	USLDC	95.89	0	0								
		4-Wire DS1 Loop - UNE Zone 3			UEPMG	USLDC	181.38	0	0								

CATEGORY	NOTES	UNBUNDLED NETWORK ELEMENT	Interim	Zone	BCS	USOC	RATES ($)					OSS RATES ($)					
												Svc Order Submitted Elec per LSR	Svc Order Submitted Manually per LSR	Incremental Charge - Manual Svc Order vs. Electronic-1st	Incremental Charge - Manual Svc Order vs. Electronic-Add'l	Incremental Charge - Manual Svc Order vs. Electronic-Disc 1st	Incremental Charge - Manual Svc Order vs. Electronic-Disc Add'l
								Nonrecurring		Nonrecurring							
										Disconnect							
							Rec	First	Add'l	First	Add'l	SOMEC	SOMAN	SOMAN	SOMAN	SOMAN	SOMAN
	UNE DSO Channelization Capacities (D4 Channel Bank Configurations)																
		24 DSO Channel Capacity - 1 per DS1			UEPMG	VUM24	121.31	0	0								
		48 DSO Channel Capacity - 1 per 2 DS1s			UEPMG	VUM48	242.62	0	0								
		96 DSO Channel Capacity -1per 4 DS1s			UEPMG	VUM96	485.24	0	0								
		144 DS0 Channel Capacity - 1 per 6 DS1s			UEPMG	VUM14	727.86	0	0								
		192 DS0 Channel Capacity -1 per 8 DS1s			UEPMG	VUM19	970.48	0	0								
		240 DS0 Channel Capacity - 1 per 10 DS1s			UEPMG	VUM20	1213.1	0	0								
		288 DS0 Channel Capacity - 1 per 12 DS1s			UEPMG	VUM28	1455.72	0	0								
		384 DS0 Channel Capacity - 1 per 16 DS1s			UEPMG	VUM38	1940.96	0	0								
		480 DS0 Channel Capacity - 1 per 20 DS1s			UEPMG	VUM40	2426.2	0	0								
		576 DS0 Channel Capacity -1 per 24 DS1s			UEPMG	VUM57	2911.44	0	0								
		672 DS0 Channel Capacity - 1 per 28 DS1s			UEPMG	VUM67	3396.68	0	0								
	Non-Recurring Charges (NRC) Associated with 4-Wire DS1 Loop with Channeliztion with Port - Conversion Charge Based on a System																
	A Minimum System configuration is One (1) DS1, One (1) D4 Channel Bank, and Up To 24 DSO Ports with Feature Activations.																
	Multiples of this configuration functioning as one are considered Add'l after the minimum system configuration is counted.																
		NRC - Conversion (Currently Combined) with or without BellSouth Allowed Changes			UEPMG	USAC4	0	72.61	3.82				10.73			1.65	
	System Additions at End User Locations Where 4-Wire DS1 Loop with Channelization with Port Combination Currently Exists and																
	New (Not Currently Combined) In Georgia Only																
		NRC - 1 DS1/D4 Channel Bank - Add NRC for each Port and Assoc Feature Activation - New GA Only			UEPMG	VUMD4	0	726.11	468.21	145.32	17.24		10.73			1.65	
	Bipolar 8 Zero Substitution																
		Clear Channel Capability Format, superframe - Subsequent Activity Only			UEPMG	CCOSF	0	0	655				10.73			1.65	
		Clear Channel Capability Format - Extended Superframe - Subsequent Activity Only			UEPMG	CCOEF	0	0	655				10.73			1.65	
	Alternate Mark Inversion (AMI)																
		Superframe Format			UEPMG	MCOSF	0	0	0								
		Extended Superframe Format			UEPMG	MCOPO	0	0	0								
	Exchange Ports Associated with 4-Wire DS1 Loop with Channelization with Port																
	Exchange Ports																
		Line Side Combination Channelized PBX Trunk Port - Business			UEPPX	UEPCX	1.34	0	0	0	0		10.73			1.65	
		Line Side Outward Channelized PBX Trunk Port - Business			UEPPX	UEPOX	1.34	0	0	0	0		10.73			1.65	
		Line Side Inward Only Channelized PBX Trunk Port without DID			UEPPX	UEP1X	1.34	0	0	0	0		10.73			1.65	
		2-Wire Trunk Side Unbundled Channelized DID Trunk Port			UEPPX	UEPDM	8.81	0	0	0	0		10.73			1.65	
	Feature Activations - Unbundled Loop Concentration																
		Feature (Service) Activation for each Line Side Port Terminated in D4 Bank			UEPPX	1PQWM	0.66	25.4	13.41	3.96	3.93		10.73			1.65	
		Feature (Service) Activation for each Trunk Side Port Terminated in D4 Bank			UEPPX	1PQWU	0.66	78.16	18.42	56.03	10.95		10.73			1.65	
	Telephone Number/ Group Establishment Charges for DID Service																

CATEGORY	NOTES	UNBUNDLED NETWORK ELEMENT	Interim	Zone	BCS	USOC	RATES ($)					OSS RATES ($)					
												Svc Order Submitted Elec per LSR	Svc Order Submitted Manually per LSR	Incremental Charge - Manual Svc Order vs. Electronic-1st	Incremental Charge - Manual Svc Order vs. Electronic-Add'l	Incremental Charge - Manual Svc Order vs. Electronic-Disc 1st	Incremental Charge - Manual Svc Order vs. Electronic-Disc Add'l
								Nonrecurring		Nonrecurring							
										Disconnect							
							Rec	First	Add'l	First	Add'l	SOMEC	SOMAN	SOMAN	SOMAN	SOMAN	SOMAN
		DID Trunk Termination (1 per Port)			UEPPX	NDT	0						10.73				
		Estab Trk Grp and Provide 1st 20 DID Nos. (FL,GA, NC,& SC)			UEPPX	NDZ	0	0	0				10.73				
		DID Numbers - groups of 20 - Valid all States			UEPPX	ND4	0	0	0				10.73				
		Non-Consecutive DID Numbers - per number			UEPPX	ND5	0	0	0				10.73				
		Reserve Non-Consecutive DID Numbers			UEPPX	ND6	0	0	0				10.73				
		Reserve DID Numbers			UEPPX	NDV	0	0	0				10.73				
	Local Number Portability																
		Local Number Portability - 1 per port			UEPPX	LNPCP	3.15	0	0								
	FEATURES - Vertical and Optional																
	Local Switching Features Offered with Line Side Ports Only																
		All Features Available			UEPPX	UEPVF	2.17	0	0				10.73			1.65	
UNBUNDLED PORT LOOP COMBINATIONS - MARKET RATES																	
	Market Rates shall apply where BellSouth is not required to provide unbundled local switching or switch ports per FCC and/or State Commission rules.																
	These scenarios include:																
	1. Unbundled port/loop combinations that are Not Currently Combined in all of the BellSouth states except as noted for Georgia and Tennessee.																
	2. Unbundled port/loop combinations that are Currently Combined or Not Currently Combined in Zone 1 of the Top 8 MSAS in BellSouth's region for end users with 4 or more DS0 equivalent lines.																
	The Top 8 MSAs in BellSouth's region are: FL (Orlando, Ft. Lauderdale, Miami); GA (Atlanta); LA (New Orleans); NC (Greensboro-Winston Salem-Highpoint/Charlotte-Gastonia-Rock Hill); TN (Nashville).																
	BellSouth currently is developing the billing capability to mechanically bill the recurring unbundled port Market Rates in this section as well as the nonrecurring Market Rates in this section for Currently Combined port/loop combinations in Zone 1 of the Top 8 MSAs in BellSouth's region for end users with 4 or more DS0 equivalent lines. In the interim, BellSouth shall bill the rates in the Cost-Based section preceding in lieu of such Market Rates and reserves the right to true-up the billing difference.																
	The Market Rate for unbundled ports includes all available features in all states.																
	End Office and Tandem Switching Usage and Common Transport Usage rates in the Port section of this rate exhibit shall apply to all combinations of loop/port network elements except for UNE Coin Port/Loop Combinations which have a flat rate usage charge (USOC: URECU).																
	For Not Currently Combined scenarios where Market Rates apply, the Nonrecurring charges are listed in the First and Additional NRC columns for each Port USOC. For Currently Combined scenarios, the Nonrecurring charges are listed in the NRC - Currently Combined section. Additional NRCs may apply also and are categorized accordingly.																
	2-WIRE VOICE GRADE LOOP WITH 2-WIRE LINE PORT (RES)																
	UNE Port/Loop Combination Rates																
		2-Wire VG Loop/Port Combo - Zone 1		1			25.89										
		2-Wire VG Loop/Port Combo - Zone 2		2			30.03										
		2-Wire VG Loop/Port Combo - Zone 3		3			43.33										
	UNE Loop Rates																
		2-Wire Voice Grade Loop (SL1) - Zone 1		1	UEPRX	UEPLX	11.89										
		2-Wire Voice Grade Loop (SL1) - Zone 2		2	UEPRX	UEPLX	16.03										
		2-Wire Voice Grade Loop (SL1) - Zone 3		3	UEPRX	UEPLX	29.33										
	2-Wire Voice Grade Line Port (Res)																
		2-Wire voice unbundled port - residenc			UEPRX	UEPRL	14	90	90				10.73			1.65	

CATEGORY	NOTES	UNBUNDLED NETWORK ELEMENT	Interim	Zone	BCS	USOC	RATES ($)					OSS RATES ($)					
												Svc Order Submitted Elec per LSR	Svc Order Submitted Manually per LSR	Incremental Charge - Manual Svc Order vs. Electronic-1st	Incremental Charge - Manual Svc Order vs. Electronic-Add'l	Incremental Charge - Manual Svc Order vs. Electronic-Disc 1st	Incremental Charge - Manual Svc Order vs. Electronic-Disc Add'l
								Nonrecurring		Nonrecurring							
										Disconnect							
							Rec	First	Add'l	First	Add'l	SOMEC	SOMAN	SOMAN	SOMAN	SOMAN	SOMAN
		2-Wire voice unbundled port with Caller ID - r			UEPRX	UEPRC	14	90	90				10.73			1.65	
		2-Wire voice unbundled port outgoing only - r			UEPRX	UEPRO	14	90	90				10.73			1.65	
		2-Wire voice unbundled Florida Area Calling with Caller ID - r			UEPRX	UEPAF	14	90	90				10.73			1.65	
		2-Wire voice unbundles res, low usage line port with Caller ID (LU			UEPRX	UEPAP	14	90	90				10.73			1.65	
	LOCAL NUMBER PORTABILITY																
		Local Number Portability (1 per port			UEPRX	LNPCX	0.35										
	FEATURES																
		All Features Offered			UEPRX	UEPVF	0	0	0								
		2-Wire Voice Grade Loop / Line Port Combination - Switch-as-			UEPRX	USAC2		41.5	41.5								
		2-Wire Voice Grade Loop / Line Port Combination - Switch with chan			UEPRX	USACC		41.5	41.5								
	ADDITIONAL NRCs																
		NRC - 2-Wire Voice Grade Loop/Line Port Combination - Subseque			UEPRX	USAS2		0	0								
	2-WIRE VOICE GRADE LOOP WITH 2-WIRE LINE PORT (BUS)																
	UNE Port/Loop Combination Rates																
		2-Wire VG Loop/Port Combo - Zone 1		1			25.89										
		2-Wire VG Loop/Port Combo - Zone 2		2			30.03										
		2-Wire VG Loop/Port Combo - Zone 3		3			43.33										
	UNE Loop Rates																
		2-Wire Voice Grade Loop (SL1) - Zone 1		1	UEPBX	UEPLX	11.89										
		2-Wire Voice Grade Loop (SL1) - Zone 2		2	UEPBX	UEPLX	16.03										
		2-Wire Voice Grade Loop (SL1) - Zone 3		3	UEPBX	UEPLX	29.33										
	2-Wire Voice Grade Line Port (Bus)																
		2-Wire voice unbundled port without Caller ID - b			UEPBX	UEPBL	14	90	90				10.73			1.65	
		2-Wire voice unbundled port with Caller + E484 ID - b			UEPBX	UEPBC	14	90	90				10.73			1.65	
		2-Wire voice unbundled port outgoing only - b			UEPBX	UEPBO	14	90	90				10.73			1.65	
	LOCAL NUMBER PORTABILITY																
		Local Number Portability (1 per port			UEPBX	LNPCX	0.35										
	FEATURES																
	NONRECURRING CHARGES - CURRENTLY COMBINED																
		2-Wire Voice Grade Loop / Line Port Combination - Switch-as-			UEPBX	USAC2		41.5	41.5								
		2-Wire Voice Grade Loop / Line Port Combination - Switch with chan			UEPBX	USACC		41.5	41.5								
	ADDITIONAL NRCs																
		NRC - 2-Wire Voice Grade Loop/Line Port Combination - Subseque			UEPBX	USAS2		0	0								
	2-WIRE VOICE GRADE LOOP WITH 2-WIRE LINE PORT (RES - PBX)																
	UNE Port/Loop Combination Rates																
		2-Wire VG Loop/Port Combo - Zone 1		1			25.89										
		2-Wire VG Loop/Port Combo - Zone 2		2			30.03										
		2-Wire VG Loop/Port Combo - Zone 3		3			43.33										

CATEGORY	NOTES	UNBUNDLED NETWORK ELEMENT	Interim	Zone	BCS	USOC	RATES ($)					OSS RATES ($)					
												Svc Order Submitted Elec per LSR	Svc Order Submitted Manually per LSR	Incremental Charge - Manual Svc Order vs. Electronic-1st	Incremental Charge - Manual Svc Order vs. Electronic-Add'l	Incremental Charge - Manual Svc Order vs. Electronic-Disc 1st	Incremental Charge - Manual Svc Order vs. Electronic-Disc Add'l
								Nonrecurring		Nonrecurring							
										Disconnect							
							Rec	First	Add'l	First	Add'l	SOMEC	SOMAN	SOMAN	SOMAN	SOMAN	SOMAN
	UNE Loop Rates																
		2-Wire Voice Grade Loop (SL1) - Zone 1		1	UEPRG	UEPLX	11.89										
		2-Wire Voice Grade Loop (SL1) - Zone 2		2	UEPRG	UEPLX	16.03										
		2-Wire Voice Grade Loop (SL1) - Zone 3		3	UEPRG	UEPLX	29.33										
	2-Wire Voice Grade Line Port Rates (RES - PBX)																
		2-Wire VG Unbundled Combination 2-Way PBX Trunk Port - Re			UEPRG	UEPRD	14	90	90				10.73			1.65	
	LOCAL NUMBER PORTABILITY																
		Local Number Portability (1 per port			UEPRG	LNPCP	3.15										
	FEATURES																
	NONRECURRING CHARGES - CURRENTLY COMBINED																
		2-Wire Voice Grade Loop/ Line Port Combination - Switch-As-			UEPRG	USAC2		41.5	41.5								
		2-Wire Voice Grade Loop/ Line Port Combination - Switch with Chan			UEPRG	USACC		41.5	41.5								
	ADDITIONAL NRCs																
		2 Wire Loop/Line Side Port Combination - Non feature - Subsequent Activity-Nonrecurring						0	0								
		PBX Subsequent Activity - Change/Rearrange Multiline Hunt Gro						7.09	7.09				10.73			1.65	
	2-WIRE VOICE GRADE LOOP WITH 2-WIRE LINE PORT (BUS - PBX)																
	UNE Port/Loop Combination Rates																
		2-Wire VG Loop/Port Combo - Zone 1		1			25.89										
		2-Wire VG Loop/Port Combo - Zone 2		2			30.03										
		2-Wire VG Loop/Port Combo - Zone 3		3			43.33										
	UNE Loop Rates																
		2-Wire Voice Grade Loop (SL1) - Zone 1		1	UEPPX	UEPLX	11.89										
		2-Wire Voice Grade Loop (SL1) - Zone 2		2	UEPPX	UEPLX	16.03										
		2-Wire Voice Grade Loop (SL1) - Zone 3		3	UEPPX	UEPLX	29.33										
	2-Wire Voice Grade Line Port Rates (BUS - PBX)																
		Line Side Unbundled Combination 2-Way PBX Trunk Port - Bu			UEPPX	UEPPC	14	90	90				10.73			1.65	
		Line Side Unbundled Outward PBX Trunk Port - Bu			UEPPX	UEPPO	14	90	90				10.73			1.65	
		Line Side Unbundled Incoming PBX Trunk Port - Bu			UEPPX	UEPP1	14	90	90				10.73			1.65	
		2-Wire Voice Unbundled PBX LD Terminal Port			UEPPX	UEPLD	14	90	90				10.73			1.65	
		2-Wire Voice Unbundled 2-Way Combination PBX Usage Pc			UEPPX	UEPXA	14	90	90				10.73			1.65	
		2-Wire Voice Unbundled PBX Toll Terminal Hotel Por			UEPPX	UEPXB	14	90	90				10.73			1.65	
		2-Wire Voice Unbundled PBX LD DDD Terminals Pc			UEPPX	UEPXC	14	90	90				10.73				
		2-Wire Voice Unbundled PBX LD Terminal Switchboard Pc			UEPPX	UEPXD	14	90	90				10.73			1.65	
		2-Wire Voice Unbundled PBX LD Terminal Switchboard IDD Capable Pc			UEPPX	UEPXE	14	90	90				10.73			1.65	
		2-Wire Voice Unbundled 2-Way PBX Hotel/Hospital Economy Administrative Calling Port			UEPPX	UEPXL	14	90	90				10.73			1.65	
		2-Wire Voice Unbundled 2-Way PBX Hotel/Hospital Economy Room Calling P			UEPPX	UEPXM	14	90	90				10.73			1.65	
		2-Wire Voice Unbundled 1-Way Outgoing PBX Hotel/Hospital Discount Room Calling Port			UEPPX	UEPXO	14	90	90				10.73			1.65	

CATEGORY	NOTES	UNBUNDLED NETWORK ELEMENT	Interim	Zone	BCS	USOC	RATES ($)					OSS RATES ($)					
												Svc Order Submitted Elec per LSR	Svc Order Submitted Manually per LSR	Incremental Charge - Manual Svc Order vs. Electronic-1st	Incremental Charge - Manual Svc Order vs. Electronic-Add'l	Incremental Charge - Manual Svc Order vs. Electronic-Disc 1st	Incremental Charge - Manual Svc Order vs. Electronic-Disc Add'l
								Nonrecurring		Nonrecurring							
										Disconnect							
							Rec	First	Add'l	First	Add'l	SOMEC	SOMAN	SOMAN	SOMAN	SOMAN	SOMAN
		2-Wire Voice Unbundled 1-Way Outgoing PBX Measured Pc			UEPPX	UEPXS	14	90	90				10.73			1.65	
	LOCAL NUMBER PORTABILITY																
		Local Number Portability (1 per port			UEPPX	LNPCP	3.15										
	FEATURES																
	NONRECURRING CHARGES - CURRENTLY COMBINED																
		2-Wire Voice Grade Loop/ Line Port Combination - Switch-As-			UEPPX	USAC2		41.5	41.5								
		2-Wire Voice Grade Loop/ Line Port Combination - Switch with Chan			UEPPX	USACC		41.5	41.5								
	ADDITIONAL NRCs																
		2-Wire Voice Grade Loop/ Line Port Combination - Subseque			UEPPX	USAS2		0	0								
		2 Wire Loop/Line Side Port Combination - Non feature - Subsequent Activity-Nonrecurring						0	0								
		PBX Subsequent Activity - Change/Rearrange Multiline Hunt Gro						7.09	7.09				10.73			1.65	
	2-WIRE VOICE GRADE LOOP WITH 2-WIRE ANALOG LINE COIN PORT																
	UNE Port/Loop Combination Rates																
		2-Wire VG Coin Port/Loop Combo – Zone 1					25.89										
		2-Wire VG Coin Port/Loop Combo – Zone 2					30.03										
		2-Wire VG Coin Port/Loop Combo – Zone 3					43.33										
	UNE Loop Rates																
		2-Wire Voice Grade Loop (SL1) - Zone :			UEPCO	UEPLX	11.89										
		2-Wire Voice Grade Loop (SL1) - Zone :			UEPCO	UEPLX	16.03										
		2-Wire Voice Grade Loop (SL1) - Zone :			UEPCO	UEPLX	29.33										
	2-Wire Voice Grade Line Port Rates (Coin)																
		2-Wire Coin 2-Way with Operator Screening and Blocking: 011, 900/976, 1+DDD (FL)			UEPCO	UEP2F	14	90	90				10.73			1.65	
		2-Wire Coin 2-Way with Operator Screening and 011 Blocking (FL)			UEPCO	UEPFA	14	90	90				10.73			1.65	
		2-Wire Coin 2-Way with Operator Screening and Blocking: 900/976, 1+DDD, 011+, and Local (FL)			UEPCO	UEPCG	14	90	90				10.73			1.65	
		2-Wire Coin Outward with Operator Screening and 011 Blocking (AL, FL)			UEPCO	UEPRK	14	90	90				10.73			1.65	
		2-Wire Coin Outward with Operator Screening and Blocking: 900/976, 1+DDD, 011+ (FL)			UEPCO	UEPOF	14	90	90				10.73			1.65	
		2-Wire Coin Outward with Operator Screening and Blocking: 900/976, 1+DDD, 011+, and Local (FL, GA)			UEPCO	UEPCQ	14	90	90				10.73			1.65	
	LOCAL NUMBER PORTABILITY																
		Local Number Portability (1 per port			UEPCO	LNPCX	0.35										
	NONRECURRING CHARGES - CURRENTLY COMBINED																
		2-Wire Voice Grade Loop/ Line Port Combination - Switch-As-I			UEPCO	USAC2		41.5	41.5								
		2-Wire Voice Grade Loop/ Line Port Combination - Switch with Chan			UEPCO	USACC		41.5	41.5								
	ADDITIONAL NRCs																
		2-Wire Voice Grade Loop/ Line Port Combination - Subseque			UEPCO	USAS2		0	0								

LOCAL INTERCONNECTION
Florida

EXHIBIT 1 - FL

Attachment 3
Exhibit A

CATEGORY	NOTES	LOCAL INTERCONNECTION	Interim	Zone	BCS	USOC	RATES					OSS RATES					
								Nonrecurring		Nonrecurring		Svc Order Submitted Elec per LSR	Svc Order Submitted Manually per LSR	Incremental Charge - Manual Svc Order vs. Electronic-1st	Incremental Charge - Manual Svc Order vs. Electronic-Add'l	Incremental Charge - Manual Svc Order vs. Electronic-Disc 1st	Incremental Charge - Manual Svc Order vs. Electronic-Disc Add'l
										Disconnect							
							Rec	First	Add'l	First	Add'l	SOMEC	SOMAN	SOMAN	SOMAN	SOMAN	SOMAN
LOCAL INTERCONNECTION (CALL TRANSPORT AND TERMINATION)																	
	END OFFICE SWITCHING																
		End Office Switching Function, Per MOU			OHD		$0.0008912										
	TANDEM SWITCHING																
		Tandem Switching Function Per MOU			OHD		$0.0005767										
		Multiple Tandem Switching, per MOU (applies to intial tandem only)			OHD		$0.0005767										
	TRUNK CHARGE																
		Installation Trunk Side Service - per DS0			OHD	TPP++		$336.43	$57.38								
		Dedicated End Office Trunk Port Service-per DS0*			OHD	TDE0P	$0.00										
		Dedicated End Office Trunk Port Service-per DS1*			0H1	TDE1P	$0.00										
		Dedicated Tandem Trunk Port Service-per DS0**			OHD	TDW0P	$0.00										
		Dedicated Tandem Trunk Port Service-per DS1**			OH1MS	TDW1P	$0.00										
	** This rate element is recovered on a per MOU basis and is included in the End Office Switching and Tandem Switching, per MOU rate elements																
LOCAL INTERCONNECTION (TRANSPORT)																	
	COMMON TRANSPORT (Shared)																
		Common Transport - Per Mile, Per MOU			OHD		$0.000003										
		Common Transport - Facilities Termination Per MOU			OHD		$0.0004										
	INTEROFFICE CHANNEL - DEDICATED TRANSPORT - VOICE GRADE																
		Interoffice Channel - Dedicated Transport - 2-Wire Voice Grade - Per Mile per month			OHL	OH1N 1L5NF	$0.0084										
		Interoffice Channel - Dedicated Transport- 2- Wire Voice Grade - Facility Termination per month			OHL	OH1N 1L5NF	$26.02	$42.69		$16.51							
	INTEROFFICE CHANNEL - DEDICATED TRANSPORT - 56/64 KBPS																
		Interoffice Channel - Dedicated Transport - 56 kbps - per mile per month			OHM	OH1N 1L5NK	$0.0084										
		Interoffice Channel - Dedicated Transport - 56 kbps - Facility Termination per month			OHM	OH1N 1L5NK	$18.95	$42.69		$16.51							
		Interoffice Channel - Dedicated Transport - 64 kbps - per mile per month			OHM	OH1N 1L5NK	$0.0084										
		Interoffice Channel - Dedicated Transport - 64 kbps - Facility Termination per month			OHM	OH1N 1L5NK	$18.95	$42.69		$16.51							
	INTEROFFICE CHANNEL - DEDICATED TRANSPORT - DS1																
		Interoffice Channel - Dedicated Channel - DS1 - Per Mile per month			OH1	OH1N 1L5NL	$0.171										
		Interoffice Channel - Dedicated Tranport - DS1 - Facility Termination per month			OH1	OH1N 1L5NL	$90.87	$95.16		$16.74							
	INTEROFFICE CHANNEL - DEDICATED TRANSPORT- DS3																
		Interoffice Channel - Dedicated Transport - DS3 - Per Mile per month			OH3	OH3N 1L5NM	$3.57										
		Interoffice Channel - Dedicated Transport - DS3 - Facility Termination per month			OH3	OH3N 1L5NM	$1,101.0000	$302.43		$64.94							
	LOCAL CHANNEL - DEDICATED TRANSPORT																
		Local Channel - Dedicated - 2-Wire Voice Grade per month			OHL	TEFV2	$21.04	$239.67		$42.34							
		Local Channel - Dedicated - 4-Wire Voice Grade per month			OHL	TEFV4	$21.91	$240.30		$34.47							
		Local Channel - Dedicated - DS1 per month			OH1	TEFHG	$34.49	$195.33		$21.90							
		Local Channel - Dedicated - DS3 Facility Termination per month(assumes 1 mile)			OH3	TEFHJ	$554.83	$501.59		$125.43							
	LOCAL INTERCONNECTION MID-SPAN MEET																
	NOTE: If Access service ride Mid-Span Meet, one-half the tariffed service Local Channel rate is applicable.																

CATEGORY	NOTES	LOCAL INTERCONNECTION	Interim	Zone	BCS	USOC	RATES					OSS RATES					
								Nonrecurring		Nonrecurring Disconnect		Svc Order Submitted Elec per LSR	Svc Order Submitted Manually per LSR	Incremental Charge - Manual Svc Order vs. Electronic-1st	Incremental Charge - Manual Svc Order vs. Electronic-Add'l	Incremental Charge - Manual Svc Order vs. Electronic-Disc 1st	Incremental Charge - Manual Svc Order vs. Electronic-Disc Add'l
							Rec	First	Add'l	First	Add'l	SOMEC	SOMAN	SOMAN	SOMAN	SOMAN	SOMAN
		Local Channel - Dedicated - DS1 per month			OH1MS	TEFHG	$0.00	$0.00									
		Local Channel - Dedicated - DS3 per month			OH3MS	TEFHJ	$0.00	$0.00									
	MULTIPLEXERS																
		Channelization - DS1 to DS0 Channel Systen			OH1	OH1M	SATN1	$151.74	$94.44		$10.00						
		DS3 to DS1 Channel System per month			OH3	OH3MS	SATNS	$218.7	$179.66		$36.37						
		DS3 Interface Unit (DS1 COCI) per month			OH1	OH1MS	SATCO	$14.24	$9.08								
	Notes: If no rate is identified in the contract, the rate for the specific service or function will be as set forth in applicable BellSouth tariff or as negotiated by the Parties upon request by either Party.																

SERVICE PROVIDER NUMBER PORTABILITY
Florida

EXHIBIT 1 - FL

Attachment 5
Exhibit A

CATEGORY	NOTES	UNBUNDLED NETWORK ELEMENT	Interim Indicator	Zone	BCS	USOC	RATES					OSS RATES					
								Nonrecurring		Nonrecurring Disconnect		Svc Order Submitted Elec per LSR	Svc Order Submitted Manually per LSR	Incremental Charge - Manual Svc Order vs. Electronic-1st	Incremental Charge - Manual Svc Order vs. Electronic-Add'l	Incremental Charge - Manual Svc Order vs. Electronic-Disc 1st	Incremental Charge - Manual Svc Order vs. Electronic-Disc Add'l
							Rec	First	Add'l	First	Add'l	SOMEC	SOMAN	SOMAN	SOMAN	SOMAN	SOMAN
INTERIM SERVICE PROVIDER NUMBER PORTABILITY - RCI																	
		RCF, per number ported (Business Line				TNPBL	$1.97	$0.3738	$0.3738	$0.0374	$0.0374	$3.5	$10.73			$1.65	
		RCF, per number ported (Residence Line				TNPRL	$1.97	$0.3738	$0.3738	$0.0374	$0.0374	$3.5	$10.73			$1.65	
		RCF, Per Additional Path					$0.6878										
INTERIM SERVICE PROVIDER NUMBER PORTABILITY - DII																	
		DID per number ported (Residence)				TNPDR		$0.6242	$0.6242	$0.6242	$0.6242	$3.5	$10.73			$1.65	
		DID per number ported (Business				TNPDB		$0.6242	$0.6242	$0.6242	$0.6242	$3.5	$10.73			$1.65	
		DID, per trunk termination, Initia				TNPT2	$52.73	$145.42	$145.42	$29.51	$29.51	$3.5	$10.73			$1.65	
		DID, per trunk termination, Subsequer				TNPT2	$52.73	$72.65	$72.65	$29.51	$29.51	$3.5	$10.73			$1.65	
SERVICE PROVIDER NUMBER PORTABILITY (RIPH																	
		RIPH, Functionality, Per Rearrangemer						$18.11	$18.11				$10.73			$1.65	
		RIPH, Per Number Portec					$1.75	$0.1952	$0.1952	$0.0195	$0.0195		$10.73			$1.65	
		RIPH, Functionality, Per Central Of						$81.56	$81.56	$2.29	$2.29		$10.73			$1.65	
	Note: If no rate is identified in the contract, the rate for the specific service or function will be as set forth in applic BellSouth tariff or as negotiated by the Parties upon request by either Party.																

ODUF/ADUF/CMDS
Florida

EXHIBIT 1 - FL

Attachment 7
Exhibit A

CATEGORY	NOTES	UNBUNDLED NETWORK ELEMENT	Interim	Zone	BCS	USOC	RATES					OSS RATES					
								Nonrecurring		Nonrecurring Disconnect		Svc Order Submitted Elec per LSR	Svc Order Submitted Manually per LSR	Incremental Charge - Manual Svc Order vs. Electronic-1st	Incremental Charge - Manual Svc Order vs. Electronic-Add'l	Incremental Charge - Manual Svc Order vs. Electronic-Disc 1st	Incremental Charge - Manual Svc Order vs. Electronic-Disc Add'l
							Rec	First	Add'l	First	Add'l	SOMEC	SOMAN	SOMAN	SOMAN	SOMAN	SOMAN
ODUF/EDOUF/ADUF/CMDS																	
	ACCESS DAILY USAGE FILE (ADUF)																
		ADUF: Message Processing, per messag				N/A	$0.0139280										
		ADUF: Data Transmission (CONNECT:DIRECT), per message				N/A	$0.000129270										
	OPTIONAL DAILY USAGE FILE (ODUF)																
		ODUF: Recording, per message				N/A	$0.0000068										
		ODUF: Message Processing, per messag				N/A	$0.006614										
		ODUF: Message Processing, per Magnetic Tape provisioned				N/A	$48.77										
		ODUF: Data Transmission (CONNECT:DIRECT), per message				N/A	$0.00010772										
	CENTRALIZED MESSAGE DISTRIBUTION SERVICE (CMDS)																
		CMDS: Message Processing, per messag				N/A	$0.004										
		CMDS: Data Transmission (CONNECT:DIRECT), per message				N/A	$0.001										
	Notes: If no rate is identified in the contract, the rate for the specific service or function will be as set forth in applicable BellSouth tariff or as negotiated by the Parties upon request by either Party.																

AMENDMENT TO
INTERCONNECTION AGREEMENT BETWEEN
BELLSOUTH TELECOMMUNICATIONS, INC.
AND ACCESS INTEGRATED NETWORKS, INC.
DATED FEBRUARY 17, 2000

This Agreement (the "Amendment") is made and entered into between BellSouth Telecommunications, Inc. ("BellSouth") a Georgia corporation, and ACCESS Integrated Networks, Inc. ("ACCESS Integrated") a Georgia corporation.

WHEREAS, The Parties desire to amend that certain Interconnection Agreement between BellSouth and ACCESS Integrated dated February 17, 2000 (the "Interconnection Agreement") in order to correct an inadvertent error affecting final rates ordered by the Tennessee Regulatory Authority ("TRA") in Docket Number 97-01262, on December19, 2000, as amended by BellSouth's corrected submissions of January31, 2001 and February 12, 2001;

NOW THEREFORE, in consideration of the mutual provisions contained herein and other good and valuable consideration, the receipt and sufficiency of which are hereby acknowledged, BellSouth and ACCESS Integrated hereby convenant and agree as follows:

1. The Parties agree to delete the rates for Tennessee only in the Amendment dated June 26, 2001 attached hereto and incorporated herein, that replaced in their entirety, the Port and Loop/Port Combination sections of Attachment 2, Exhibit C, Rates to incorporate rates for Vertical Features, and to put back into full force and effect the Second Amendment dated May 2, 2001 for the state of Tennessee.

2. The Parties agree that all of the other provisions of the Interconnection Agreement, dated February 17, 2000, shall remain in full force and effect.

3. The Parties further agree that either or both of theParties is authorized to submit this Amendment to the Tennessee Regulatory Authority or other regulatory body having jurisdiction over the subject matter of this Amendment, for approval subject to Section 252(e) of the federal Telecommunications Act of 1996.

This Amendment is made effective upon the date that it is signed by both Parties.

IN WITNESS WHEREOF, the parties hereto have caused this Amendment to be executed by their respective duly authorized representatives on the data indicated below.

BellSouth Telecommunications, Inc.	**ACCESS Integrated Networks, Inc.**
Signature: _____	Signature: _____
Name: ____Greg Follensbee_____	Name: _____
Title: ____Senior Director_____	Title: _____
Date: _____	Date: _____

AMENDMENT
TO THE
INTERCONNECTION AGREEMENT BETWEEN
ACCESS INTEGRATED NETWORKS, INC.
AND
BELLSOUTH TELECOMMUNICATIONS, INC.
DATED FEBRUARY 17, 2000

Pursuant to this Amendment, (the "Amendment"), ACCESS Integrated Networks, Inc. ("ACCESS Integrated") and BellSouth Telecommunications, Inc. ("BellSouth") hereinafter referred to collectively as the "Parties," hereby amend that certain Interconnection Agreement between the Parties dated February 17, 2000 (the "Interconnection Agreement").

WHEREAS, the Parties entered into an Interconnection Agreement on February 17, 2000; and;

WHEREAS, the Parties desire to amend that Interconnection Agreement.

NOW THEREFORE, in consideration of the mutual provisions contained herein and other good and valuable consideration, the receipt and sufficiency of which are hereby acknowledged, the Parties hereby covenant and agree as follows:

1. The Interconnection Agreement is hereby amended to replace in their entirety, the Port and Loop/Port Combination sections of Attachment 2, Exhibit C, Rates attached hereto as Exhibit 1 and by reference made a part of this Amendment, to incorporate rates for Vertical Features.

2. This Amendment shall be effective as of the date of the last signature of both Parties.

3. All of the other provisions of the Agreement, dated February 17, 2000 shall remain in full force and effect.

4. Either or both of the Parties shall submit this Amendment to the appropriate Commission for approval subject to Section 252(e) of the Federal Telecommunications Act of 1996.

IN WITNESS WHEREOF, the Parties hereto have caused this Amendment to the Interconnection Agreement to be executed by their respective duly authorized representatives on the date indicated below.

ACCESS Integrated Networks, Inc.	**BellSouth Telecommunications, Inc.**
By: Signature on File	By: Signature on File
Name: William T. Wright	Name: Gregory R. Follensbee
Title: President	Title: Senior Director
Date: 6/26/01	Date: 6/26/01

EXHIBIT 1

Attachment 2
Exhibit C
Rates - Page 1

BELLSOUTH/ACCESS INTEGRATED RATES
NETWORK ELEMENTS
AND OTHER SERVICES
PORTS

DESCRIPTION	USOC	AL	FL	GA	KY	LA	MS	NC	SC
LOCAL EXCHANGE SWITCHING (PORTS)									
2-Wire Analog Line Port (Res., Bus.), per month									
2- wire voice unbundled port - residenc	UEPRL	$2.07	$2.00 - Note 1	$1.85 - Note 1	$2.61 - Note 1	$2.20	$2.11	$2.19	$2.35
2-wire voice unbundled port with caller ID - residenc	UEPRC	$2.07	$2.00	$1.85	$2.61	$2.20	$2.11	$2.00	$2.35
2-wire voice unbundled port outgoing only - residenc	UEPRO	$2.07	$2.00	$1.85	$2.61	$2.20	$2.11	$2.00	$2.35
2-wire voice unbundled area plus port with caller ID - residenc	UEPRM	$2.07	$2.00	$1.85	$2.61	$2.20	$2.11	$2.00	$2.35
2-wire voice unbundled Florida area calling with caller ID - residenc	UEPAF	NA	$2.00	NA	NA	NA	NA	NA	NA
2-wire voice unbundled Louisiana Area Plus with caller ID - residence (RU	UEPAG	NA	NA	NA	NA	$2.20	NA	NA	NA
2-wire voice unbundled Louisiana Area Plus with caller ID - residence (AC	UEPAH	NA	NA	NA	NA	$2.20	NA	NA	NA
2-wire voice unbundled South Carolina Area Calling port with Caller ID residence (LW8)	UEPAJ	NA	NA	NA	NA	NA	NA	NA	$2.35
2-wire voice unbundled Tennessee Area Calling port with Caller ID - residenc (F2R)	UEPAK	NA	NA	NA	NA	NA	NA	NA	NA
2-wire voice unbundled Tennessee Area Calling port with Caller ID - residenc (TACER)	UEPAL	NA	NA	NA	NA	NA	NA	NA	NA
2-wire voice unbundled Tennessee Area Calling port with Caller ID - residenc (TACSR)	UEPAM	NA	NA	NA	NA	NA	NA	NA	NA
2-wire voice unbundled Tennessee Area Calling port with Caller ID - residenc (1MF2X)	UEPAN	NA	NA	NA	NA	NA	NA	NA	NA
2-wire voice unbundled Tennessee Area Calling port with Caller ID - residenc (2MR)	UEPAO	NA	NA	NA	NA	NA	NA	NA	NA
2-wire voice unbundled res, low usage line port with Caller ID (LUN	UEPAP	$2.07	$2.00	$1.85	$2.61	$2.20	$2.11	$2.00	$2.35
LOCAL NUMBER PORTABILITY (REQUIRES ONE PER PORT	LNPCX								
2-wire voice unbundled port without Caller ID	UEPBL	$2.07	$2.00	$1.85	$2.61	$2.20	$2.11	$2.00	$2.35
2-wire voice unbundled port with unbundled port with Caller+E484 I	UEPBC	$2.07	$2.00	$1.85	$2.61	$2.20	$2.11	$2.00	$2.35
2-wire voice unbundled outgoing only port	UEPBO	$2.07	$2.00	$1.85	$2.61	$2.20	$2.11	$2.00	$2.35
2-wire voice unbundled area plus port with Caller ID	UEPBM	$2.07	$2.00	$1.85	$2.61	$2.20	$2.11	$2.00	$2.35
2-wire voice unbundled incoming only port with Caller ID	UEPB1	$2.07	$2.00	$1.85	$2.61	$2.20	$2.11	$2.00	$2.35
2-wire voice unbundled LA Bus Area Calling Port with Caller ID (BUC	UEPAA	NA	NA	NA	NA	$2.20	NA	NA	NA
2-wire voice unbundled SC Bus Area Calling Port with Caller ID (LME	UEPAB	NA	NA	NA	NA	NA	NA	NA	$2.35
2-wire voice unbundled TN Bus 2-Way Area Calling Port Economy Optio (TACC1)	UEPAC	NA	NA	NA	NA	NA	NA	NA	NA
2-wire voice unbundled TN Bus 2-Way Area Calling Port Standard Optio (TACC2)	UEPAD	NA	NA	NA	NA	NA	NA	NA	NA
2-wire voice unbundled TN Bus 2-WAY Collierville and Memphis Local Callin Port (B2F)	UEPAE	NA	NA	NA	NA	NA	NA	NA	NA
LOCAL NUMBER PORTABILITY (REQUIRES ONE PER PORT	LNPCX								
Non-Recurring Charges (NRC) - 1st (Residence									
2- wire voice unbundled port - residence	UEPRL	$21.93	$38.00	$17.16	$37.78	$16.43	$22.98	$21.60	$24.98
2-wire voice unbundled port with caller ID - residenc	UEPRC	$21.93	$38.00	$17.16	$37.78	$16.43	$22.98	$24.04	$24.98
2-wire voice unbundled port outgoing only - residenc	UEPRO	$21.93	$38.00	$17.16	$37.78	$16.43	$22.98	$24.04	$24.98
2-wire voice unbundled area plus port with caller ID - residenc	UEPRM	$21.93	$38.00	$17.16	$37.78	$16.43	$22.98	$24.04	$24.98
2-wire voice unbundled Florida area calling with caller ID - residenc	UEPAF	NA	$38.00	NA	NA	NA	NA	NA	NA
2-wire voice unbundled Louisiana Area Plus with caller ID - residence (RU	UEPAG	NA	NA	NA	NA	$16.43	NA	NA	NA
2-wire voice unbundled Louisiana Area Plus with caller ID - residence (AC	UEPAH	NA	NA	NA	NA	$16.43	NA	NA	NA
2-wire voice unbundled South Carolina Area Calling port with Caller ID residence (LW8)	UEPAJ	NA	NA	NA	NA	NA	NA	NA	$24.98
2-wire voice unbundled Tennessee Area Calling port with Caller ID - residenc (F2R)	UEPAK	NA	NA	NA	NA	NA	NA	NA	NA
2-wire voice unbundled Tennessee Area Calling port with Caller ID - residenc (TACER)	UEPAL	NA	NA	NA	NA	NA	NA	NA	NA
2-wire voice unbundled Tennessee Area Calling port with Caller ID - residenc (TACSR)	UEPAM	NA	NA	NA	NA	NA	NA	NA	NA
2-wire voice unbundled Tennessee Area Calling port with Caller ID - residenc (1MF2X)	UEPAN	NA	NA	NA	NA	NA	NA	NA	NA

BELLSOUTH/ACCESS INTEGRATED RATES
NETWORK ELEMENTS
AND OTHER SERVICES
PORTS

		2-wire voice unbundled Tennessee Area Calling port with Caller ID - residenc (2MR)	UEPAO	NA	NA	NA	NA	NA	NA	NA	NA
		2-wire voice unbundled Res Low Usage Line Port with Caller+E563 ID (LUM	UEPAP	$21.93	$38.00	$17.16	$37.78	$16.43	$22.98	$24.04	$24.98
		NRC - Add'l (Residence)									
		2- wire voice unbundled port - residence -	UEPRL	$21.93	$15.00	$17.16	$37.78	$16.43	$22.98	$21.60	$24.98
		2-wire voice unbundled port with caller ID - residenc	UEPRC	$21.93	$15.00	$17.16	$37.78	$16.43	$22.98	$9.08	$24.98
		2-wire voice unbundled port outgoing only - residenc	UEPRO	$21.93	$15.00	$17.16	$37.78	$16.43	$22.98	$9.08	$24.98
		2-wire voice unbundled area plus port with caller ID - residenc	UEPRM	$21.93	$15.00	$17.16	$37.78	$16.43	$22.98	$9.08	$24.98
		2-wire voice unbundled Florida area calling with caller ID - residenc	UEPAF	NA	$15.00	NA	NA	NA	NA	NA	NA
		2-wire voice unbundled Louisiana Area Plus with caller ID - residence (RU	UEPAG	NA	NA	NA	NA	$16.43	NA	NA	NA
		2-wire voice unbundled Louisiana Area Plus with caller ID - residence (AC	UEPAH	NA	NA	NA	NA	$16.43	NA	NA	NA
		2-wire voice unbundled South Carolina Area Calling port with Caller ID residence (LW8)	UEPAJ	NA	NA	NA	NA	NA	NA	NA	$24.98
		2-wire voice unbundled Tennessee Area Calling port with Caller ID - residenc (F2R)	UEPAK	NA	NA	NA	NA	NA	NA	NA	NA
		2-wire voice unbundled Tennessee Area Calling port with Caller ID - residenc (TACER)	UEPAL	NA	NA	NA	NA	NA	NA	NA	NA
		2-wire voice unbundled Tennessee Area Calling port with Caller ID - residenc (TACSR)	UEPAM	NA	NA	NA	NA	NA	NA	NA	NA
		2-wire voice unbundled Tennessee Area Calling port with Caller ID - residenc (1MF2X)	UEPAN	NA	NA	NA	NA	NA	NA	NA	NA
		2-wire voice unbundled Tennessee Area Calling port with Caller ID - residenc (2MR)	UEPAO	NA	NA	NA	NA	NA	NA	NA	NA
		2-wire voice unbundled Res Low Usage Line Port with Caller ID (LUM	UEPAP	$21.93	$15.00	$17.16	$37.78	$16.43	$22.98	$9.08	$24.98
		NRC - 1st (Business)									
		2-wire Voice Unbundled Port without Caller ID	UEPBL	$21.93	$38.00	$17.16	$37.55	$16.43	$22.98	$21.60	$24.98
		2-wire voice unbundled port with Caller ID	UEPBC	$21.93	$38.00	$17.16	$37.55	$16.43	$22.98	$24.04	$24.98
		2-wire voice unbundled outgoing only port	UEPBO	$21.93	$38.00	$17.16	$37.55	$16.43	$22.98	$24.04	$24.98
		2-wire voice unbundled Area Plus Port with Caller ID	UEPBM	$21.93	$38.00	$17.16	$37.55	$16.43	$22.98	$24.04	$24.98
		2-wire voice unbundled Incoming only Port with Caller ID	UEPB1	$21.93	$38.00	$17.16	$37.55	$16.43	$22.98	$24.04	$24.98
		2-wire voice unbundled LA Bus Area Calling Port with Caller ID (BUC	UEPAA	NA	NA	NA	NA	$16.43	NA	NA	NA
		2-wire voice unbundled SC Bus Area Calling Port with Caller ID+E587 (LME	UEPAB	NA	NA	NA	NA	NA	NA	NA	$24.98
		2-wire voice unbundled TN Bus 2-way Area Calling Port Economy Option (TACC1)	UEPAC	NA	NA	NA	NA	NA	NA	NA	NA
		2-wire voice unbundled TN Bus 2-way Area Calling Port Standard Option (TACC2)	UEPAD	NA	NA	NA	NA	NA	NA	NA	NA
		2-wire voice unbundled TN Bus 2-way Collierville and Memphis Local Callin Port (B2F)	UEPAE	NA	NA	NA	NA	NA	NA	NA	NA
		NRC - Add'l (Business)	UEPBL	$21.93	$15.00	$17.16	$37.55	$16.43	$22.98	$9.08	$24.98
		2-wire voice unbundled port without Caller ID	UEPBL	$21.93	$15.00	$17.16	$37.55	$16.43	$22.98	$21.60	$24.98
		2-wire voice unbundled port with Caller ID	UEPBC	$21.93	$15.00	$17.16	$37.55	$16.43	$22.98	$9.08	$24.98
		2-wire voice unbundled outgoing only port	UEPBO	$21.93	$15.00	$17.16	$37.55	$16.43	$22.98	$9.08	$24.98
		2-wire voice unbundled Area Plus Port with Caller ID	UEPBM	$21.93	$15.00	$17.16	$37.55	$16.43	$22.98	$9.08	$24.98
		2-wire voice unbundled incoming only port with Caller ID	UEPB1	$21.93	$15.00	$17.16	$37.55	$16.43	$22.98	$9.08	$24.98
		2-wire voice unbundled LA Bus Area Calling Port with Caller ID (BUC	UEPAA	NA	NA	NA	NA	$16.43	NA	NA	NA
		2-wire voice unbundled SC Bus Area Calling Port with Caller ID (LME	UEPAB	NA	NA	NA	NA	NA	NA	NA	$24.98
		2-wire voice unbundled TN Bus 2-way Area Calling Port Economy Option (TACC1)	UEPAC	NA	NA	NA	NA	NA	NA	NA	NA
		2-wire voice unbundled TN Bus 2-way Area Calling Port Standard Option (TACC2)	UEPAD	NA	NA	NA	NA	NA	NA	NA	NA
		2-wire voice unbundled TN Bus 2-way Collierville and Memphis Locall Callin Port (B2F)	UEPAE	NA	NA	NA	NA	NA	NA	NA	NA
		NRC - Disconnect Charge - 1st									
		2- wire voice unbundled port - residenc		$6.21	NA	NA	NA	$4.38	$6.56	NA	NA
		2-wire voice unbundled port with caller ID - residenc		$6.21	NA	NA	NA	$4.38	$6.56	NA	NA
		2-wire voice unbundled port outgoing only - residenc		$6.21	NA	NA	NA	$4.38	$6.56	NA	NA
		2-wire voice unbundled area plus port with caller ID - residenc		$6.21	NA	NA	NA	$4.38	$6.56	NA	NA

BELLSOUTH/ACCESS INTEGRATED RATES
NETWORK ELEMENTS
AND OTHER SERVICES
PORTS

			2-wire voice unbundled Florida area calling with caller ID - residenc		NA	NA	NA	NA	NA	NA	NA	NA
			2-wire voice unbundled Louisiana Area Plus with caller ID - residence (RU		NA	NA	NA	NA	$4.38	NA	NA	NA
			2-wire voice unbundled Louisiana Area Plus with caller ID - residence (AC		NA	NA	NA	NA	$4.38	NA	NA	NA
			2-wire voice unbundled South Carolina Area Calling port with Caller ID residence (LW8)		NA	NA	NA	NA	NA	NA	NA	NA
			2-wire voice unbundled Tennessee Area Calling port with Caller ID - residenc (F2R)		NA	NA	NA	NA	NA	NA	NA	NA
			2-wire voice unbundled Tennessee Area Calling port with Caller ID - residenc (TACER)		NA	NA	NA	NA	NA	NA	NA	NA
			2-wire voice unbundled Tennessee Area Calling port with Caller ID - residenc (TACSR)		NA	NA	NA	NA	NA	NA	NA	NA
			2-wire voice unbundled Tennessee Area Calling port with Caller ID - residenc (1MF2X)		NA	NA	NA	NA	NA	NA	NA	NA
			2-wire voice unbundled Tennessee Area Calling port with Caller ID - residenc (2MR)		NA	NA	NA	NA	NA	NA	NA	NA
			2-wire voice unbundled Res Low Usage Line Port with Caller ID (LUM		$6.21	NA	NA	NA	$4.38	$6.56	NA	NA
			2-wire voice unbundled port without Caller ID		$6.21	NA	NA	NA	$4.38	$6.56	NA	NA
			2-wire voice unbundled port with Caller ID		$6.21	NA	NA	NA	$4.38	$6.56	NA	NA
			2-wire voice unbundled outgoing only Port		$6.21	NA	NA	NA	$4.38	$6.56	NA	NA
			2-wire voice unbundled Area Plus Port with Caller ID		$6.21	NA	NA	NA	$4.38	$6.56	NA	NA
			2-wire voice unbundled Incoming only Port with Caller ID		$6.21	NA	NA	NA	$4.38	$6.56	NA	NA
			2-wire voice unbundled LA Bus Area Calling Port with Caller ID (BUC		NA	NA	NA	NA	$4.38	NA	NA	NA
			2-wire voice unbundles SC Bus Area Calling Port with Caller ID (LME		NA	NA	NA	NA	NA	NA	NA	NA
			2-wire voice unbundled TN Bus 2-way Area Calling Port Economy Optio (TACC1)		NA	NA	NA	NA	NA	NA	NA	NA
			2-wire voice unbundled TN Bus 2-way Area Calling Port Standard Optio (TACC2)		NA	NA	NA	NA	NA	NA	NA	NA
			2-wire voice unbundled TN Bus 2-Way Collierville and Memphis Local Callin Port (B2F)		NA	NA	NA	NA	NA	NA	NA	NA
			NRC - Disconnect Charge - Add'									
			2- wire voice unbundled port - residenc		$6.21	NA	NA	NA	$4.38	$6.56	NA	NA
			2-wire voice unbundled port with caller ID - residenc		$6.21	NA	NA	NA	$4.38	$6.56	NA	NA
			2-wire voice unbundled port outgoing only - residenc		$6.21	NA	NA	NA	$4.38	$6.56	NA	NA
			2-wire voice unbundled area plus port with caller ID - residenc		$6.21	NA	NA	NA	$4.38	$6.56	NA	NA
			2-wire voice unbundled Florida area calling with caller ID - residenc		NA	NA	NA	NA	NA	NA	NA	NA
			2-wire voice unbundled Louisiana Area Plus with caller ID - residence (RU		NA	NA	NA	NA	$4.38	NA	NA	NA
			2-wire voice unbundled Louisiana Area Plus with caller ID - residence (AC		NA	NA	NA	NA	$4.38	NA	NA	NA
			2-wire voice unbundled South Carolina Area Calling port with Caller ID residence (LW8)		NA	NA	NA	NA	NA	NA	NA	NA
			2-wire voice unbundled Tennessee Area Calling port with Caller ID - residenc (F2R)		NA	NA	NA	NA	NA	NA	NA	NA
			2-wire voice unbundled Tennessee Area Calling port with Caller ID - residenc (TACER)		NA	NA	NA	NA	NA	NA	NA	NA
			2-wire voice unbundled Tennessee Area Calling port with Caller ID - residenc (TACSR)		NA	NA	NA	NA	NA	NA	NA	NA
			2-wire voice unbundled Tennessee Area Calling port with Caller ID - residenc (1MF2X)		NA	NA	NA	NA	NA	NA	NA	NA
			2-wire voice unbundled Tennessee Area Calling port with Caller ID - residenc (2MR)		NA	NA	NA	NA	$4.38	$6.56	NA	NA
			2-wire voice unbundled Res Low Usage Line Port with Caller ID (LUM		$6.21	NA	NA	NA	$4.38	$6.56	NA	NA
			2-wire voice unbundled port without Caller ID		$6.21	NA	NA	NA	$4.38	$6.56	NA	NA
			2-wire voice unbundled port with Caler ID		$6.21	NA	NA	NA	$4.38	$6.56	NA	NA
			2-wire voice unbundled outgoing only port		$6.21	NA	NA	NA	$4.38	$6.56	NA	NA
			2-wire voice unbundled Area Plus Port with Caller ID		$6.21	NA	NA	NA	$4.38	$6.56	NA	NA
			2-wire voice unbundled incoming only port with Caller ID		$6.21	NA	NA	NA	$4.38	$6.56	NA	NA
			2-wire voice unbundled LA Bus Area Calling Port with Caller ID (BUC		NA	NA	NA	NA	$4.38	NA	NA	NA
			2-wire voice unbundled SC Bus Area Calling Port with Caller ID (LME		NA	NA	NA	NA	NA	NA	NA	NA

BELLSOUTH/ACCESS INTEGRATED RATES
NETWORK ELEMENTS
AND OTHER SERVICES
PORTS

2-wire voice unbundled TN Bus 2-way Area Calling Port Economy Optio (TACC1)		NA	NA	NA	NA	NA	NA	NA	NA
2-wire voice unbundled TN Bus 2-way Area Calling Port Standard Optio (TACC2)		NA	NA	NA	NA	NA	NA	NA	NA
2-wire voice unbundled TN Bus 2-way Collierville and Memphis Local Callin Port (B2F)		NA	NA	NA	NA	NA	NA	NA	NA
NRC - Incremental Charge - Manual Service Order - 1s	SOMAN	$27.37	NA	$18.94	NA	$18.14	$25.52	$26.94	$44.42
NRC - Incremental Charge - Manual Service Order - Add	SOMAN	$12.97	NA	$8.42	NA	$8.06	$11.34	$12.76	$14.63
NRC - Incremental Charge - Manual Service Order - Disconnect - 1s	SOMAN	$17.77	NA	NA	NA	$10.39	$16.06	NA	NA
NRC - Incremental Charge - Manual Service Order - Disconnect - Adc	SOMAN	$1.44	NA	NA	NA	NA	NA	NA	NA
All available features, per month	UEPVF	$2.64	$3.40	$0.00	$3.39	$3.08	$3.21	$3.04	$3.04
NRC - OSS LSR Charge, Electronic, per LSR received from the CLEC by one the OSS interactive interfaces	SOMEC	$3.50	$3.50	$3.50	$3.50	$3.50	$3.50	$3.50	$3.50
NRC - Incremental Charge - Manual Service Order - 1s	SOMAN	$27.37	$19.99	$19.99	$19.99	$18.14	$25.52	$26.94	$44.42
NRC - Incremental Charge - Manual Service Order - Add	SOMAN	$12.97	NA	NA	NA	$8.06	$11.34	$12.76	$14.63
NRC - Incremental Charge - Manual Service Order - Disconnect - 1s	SOMAN	$17.77	NA	NA	NA	$10.39	$16.06	NA	NA
NRC - Incremental Charge - Manual Service Order - Disconnect - Adc	SOMAN	$1.44	NA	NA	NA	NA	NA	NA	NA
4-Wire Analog VG Port, per month	UEP4A	NA	$9.14	$8.47	NA	$10.13	$9.60	$8.69	$2.28
NRC - 1st	UEP4A	NA	$5.86	$17.16	NA	$16.43	$22.98	$21.69	$3.50
NRC - Add'l	UEP4A	NA	$5.86	$17.16	NA	$16.43	$22.98	$21.69	$3.50
NRC - Disconnect Charge - 1s	BFR	NA	NA	NA	NA	$3.77	$6.56	NA	NA
NRC - Disconnect Charge - Add'	BFR	NA	NA	NA	NA	$3.77	$6.56	NA	NA
NRC - Incremental Charge - Manual Service Order - 1s	SOMAN	NA	NA	$18.94	NA	$18.14	$25.52	$26.85	NA
NRC - Incremental Charge - Manual Service Order - Add	SOMAN	NA	NA	$8.42	NA	$8.06	$11.34	$12.67	NA
NRC - Incremental Charge - Manual Service Order - Disconnect - 1s	SOMAN	NA	NA	NA	NA	$8.94	$16.06	NA	NA
2-Wire DID Port, per month	UEPP2	$12.08	TBD	$11.35	NA	$13.12	$14.63	$12.36	$12.08
NRC - 1st	UEPP2	$50.00	TBD	$61.91	NA	$59.28	$83.09	$81.84	$50.00
NRC - Add'l	UEPP2	$18.00	TBD	$61.91	NA	$59.28	$83.09	$81.84	$50.00
NRC - Disconnect Charge - 1s	UEPP2	NA	NA	NA	NA	$9.20	$13.48	NA	NA
NRC - Disconnect Charge - Add'	UEPP2	NA	NA	NA	NA	$9.20	$13.48	NA	NA
NRC - Incremental Charge - Manual Service Order - 1s	SOMAN	NA	NA	$18.94	NA	$18.14	$25.52	$26.94	NA
NRC - Incremental Charge - Manual Service Order - Add	SOMAN	NA	NA	$8.42	NA	$8.06	$11.34	$12.76	NA
NRC - Incremental Charge - Manual Service Order - Disconnect - 1s	SOMAN	NA	NA	NA	NA	$10.39	$16.07	NA	NA
4-Wire DS1 Port w/DID capability, per month	UEPDD	$130.23	$125.00	$120.80	NA	$149.27	$146.46	$123.65	$130.23
NRC - 1st	UEPDD	$50.00	$112.00	$89.44	NA	$85.63	$117.81	$116.59	$60.00
NRC - Add'l	UEPDD	$18.00	$91.00	$52.46	NA	$50.23	$71.18	$69.92	$60.00
NRC - Disconnect Charge - 1s	UEPDD	NA	NA	NA	NA	$8.82	$12.94	NA	NA
NRC - Disconnect Charge - Add'	UEPDD	NA	NA	NA	NA	$8.82	$12.94	NA	NA
NRC - Incremental Charge - Manual Service Order - 1s	SOMAN	NA	NA	$18.94	NA	$18.14	$25.52	$26.94	NA
NRC - Incremental Charge - Manual Service Order - Add	SOMAN	NA	NA	$8.42	NA	$8.06	$11.34	$12.76	NA
NRC - Incremental Charge - Manual Service Order - Disconnect - 1s	SOMAN	NA	NA	NA	NA	$10.39	$16.06	NA	NA
2-Wire ISDN Port(2) (3), per month	U1PMA	$16.42	$13.00	$13.47	$12.33	$23.33	$51.91	$24.50	$33.74
NRC - 1st	U1PMA	$63.24	$88.00	$47.37	$90.48	$45.35	$63.59	$62.29	$65.79
NRC - Add'l	U1PMA	$63.24	$66.00	$47.37	$84.53	$45.35	$63.59	$62.29	$65.79
NRC - Disconnect Charge - 1s	U1PMA	$5.69	NA	NA	NA	$4.31	$7.04	NA	NA
NRC - Disconnect Charge - Add'	U1PMA	$5.69	NA	NA	NA	$4.31	$7.04	NA	NA
NRC - Incremental Charge - Manual Service Order - 1s	SOMAN	$56.19	NA	$39.98	NA	$38.29	$53.87	$55.30	$67.52
NRC - Incremental Charge - Manual Service Order - Add	SOMAN	$56.19	NA	$39.98	NA	$38.29	$53.87	$55.30	$67.52
NRC - Incremental Charge - Manual Service Order - Disconnect - 1s	SOMAN	$12.97	NA	NA	NA	$6.65	$11.34	NA	NA
NRC - Incremental Charge - Manual Service Order - Disconnect - Adc	SOMAN	$12.97	NA	NA	NA	$6.65	$11.34	NA	NA
NRC - User Profile per B Channel **(4)**	U1UMA	NA	NA	NA	$5.61	NA	NA	NA	NA
All available features, per month	UEPVF	$2.64	$3.40	$0.00	$3.39	$3.08	$3.21	$3.04	$3.04
NRC - OSS LSR Charge, Electronic, per LSR received from the CLEC by one the OSS interactive interfaces	SOMEC	$3.50	$3.50	$3.50	$3.50	$3.50	$3.50	$3.50	$3.50
NRC - Incremental Charge - Manual Service Order - 1s	SOMAN	$56.19	$21.56	$39.98	$19.99	$38.29	$53.87	$55.30	$67.52
NRC - Incremental Charge - Manual Service Order - Add	SOMAN	$56.19	$21.56	$39.98	NA	$38.29	$53.87	$55.30	$67.52
NRC - Incremental Charge - Manual Service Order - Disconnect - 1s	SOMAN	$12.97	$3.84	NA	NA	$6.65	$11.34	NA	NA

BELLSOUTH/ACCESS INTEGRATED RATES
NETWORK ELEMENTS
AND OTHER SERVICES
PORTS

			NRC - Incremental Charge - Manual Service Order - Disconnect - Adc	SOMAN	$12.97	$3.84	NA	NA	$6.65	$11.34	NA	NA
4-Wire ISDN DS1 Port, per month				UEPEX	$186.02	NA	$163.16	NA	$194.72	$213.21	$179.75	$214.79
			NRC - 1st	UEPEX	$244.85	NA	$186.80	NA	$181.89	$244.12	$241.63	$278.37
			NRC - Add'l	UEPEX	$244.85	NA	$186.80	NA	$181.89	$244.12	$241.63	$278.37
			NRC - Disconnect Charge - 1s	UEPEX	$51.19	NA	NA	NA	$27.11	$53.32	NA	NA
			NRC - Disconnect Charge - Add'	UEPEX	$51.19	NA	NA	NA	$27.11	$53.32	NA	NA
			NRC - Incremental Charge - Manual Service Order - 1s	SOMAN	$54.75	NA	$37.88	NA	$33.18	$51.03	$53.89	$65.48
			NRC - Incremental Charge - Manual Service Order - Add	SOMAN	$54.75	NA	$37.88	NA	$33.18	$51.03	$53.89	$65.48
			NRC - Incremental Charge - Manual Service Order - Disconnect - 1s	SOMAN	$11.53	NA	NA	NA	$7.73	$8.51	NA	NA
			NRC - Incremental Charge - Manual Service Order - Disconnect - Adc	SOMAN	$11.53	NA	NA	NA	$7.73	$8.51	NA	NA
4-Wire ISDN DS1 Port including all available features, per month				UEPEX	NA	NA	NA	$275.48	NA	NA	NA	$251.00
			NRC - 1st	UEPEX	NA	NA	NA	$181.27	NA	NA	NA	$311.73
			NRC - Add'l	UEPEX	NA	NA	NA	$116.42	NA	NA	NA	$311.73
			NRC - Incremental Charge - Manual Service Order - 1s	SOMAN	NA	NA	NA	NA	NA	NA	NA	$65.48
			NRC - Incremental Charge - Manual Service Order - Add	SOMAN	NA	NA	NA	NA	NA	NA	NA	$65.48
2-Wire Analog Line Port (PBX), per month												
			2 WIRE VOICE UNBUNDLED COMBINATION 2-WAY PBX TRUNK - Residenc	UEPRD	$2.07	$2.00	$1.85	$2.61	$2.20	$2.11	$2.18	$2.35
			LINE SIDE UNBUNDLED COMBINATION 2-WAY PBX TRUNK - BUSINESS	UEPPC	$2.07	$2.00	$1.85	$2.61	$2.20	$2.11	$2.00	$2.35
			LINE SIDE UNBUNDLED OUTWARD PBX TRUNK - BUSINESS	UEPPO	$2.07	$2.00	$1.85	$2.61	$2.20	$2.11	$2.00	$2.35
			LINE SIDE UNBUNDLED INCOMING PBX TRUNK - BUSINESS	UEPP1	$2.07	$2.00	$1.85	$2.61	$2.20	$2.11	$2.00	$2.35
			LONG DISTANCE TERMINAL PBX TRUNK-BUSINESS	UEPLD	$2.07	$2.00	$1.85	$2.61	$2.20	$2.11	$2.00	$2.35
			TN 2-WAY CALLING PLAN PBX TRUNK - BUSINESS	UEPT2	$2.07	$2.00	$1.85	$2.61	$2.20	$2.11	$2.00	$2.35
			TN OUTWARD CALLING PLAN PBX TRUNK - BUSINESS	UEPTO	$2.07	$2.00	$1.85	$2.61	$2.20	$2.11	$2.00	$2.35
			2-WIRE VOICE UNBUNDLED 2-WAY COMBINATION PBX ALABAMA CALLING PORT	UEPA2	$2.07	NA	NA	NA	NA	NA	NA	NA
			2-WIRE VOICE UNBUNDLED 2-WAY COMBINATION PBX LOUISIANA CALLING PORT	UEPL2	NA	NA	NA	NA	$2.20	NA	NA	NA
			2-WIRE VOICE UNBUNDLED PBX LD TERMINAL PORTS	UEPLD	$2.07	$2.00	$1.85	$2.61	$2.20	$2.11	$2.00	$2.35
			2-WIRE VOICE UNBUNDLED 2-WAY COMBINATION PBX TENNESSEE CALLING PORT	UEPT2	NA	NA	NA	NA	NA	NA	NA	NA
			2-WIRE VOICE UNBUNDLED 1-WAY OUTGOING PBX TENNESSEE CALLING PORT	UEPTO	NA	NA	NA	NA	NA	NA	NA	NA
			2-WIRE VOICE UNBUNDLED 2-WAY COMBINATION PBX USAGE POR	UEPXA	$2.07	$2.00	$1.85	$2.61	$2.20	$2.11	$2.00	$2.35
			2-WIRE VOICE UNBUNDLED PBX TOLL TERMINAL HOTEL PORTS	UEPXB	$2.07	$2.00	$1.85	$2.61	$2.20	$2.11	$2.00	$2.35
			2-WIRE VOICE UNBUNDLED PBX LD DDD TERMINALS POR	UEPXC	$2.07	$2.00	$1.85	$2.61	$2.20	$2.11	$2.00	$2.35
			2-WIRE VOICE UNBUNDLED PBX LD TERMINAL SWITCHBOARD POR	UEPXD	$2.07	$2.00	$1.85	$2.61	$2.20	$2.11	$2.00	$2.35
			2-WIRE VOICE UNBUNDLED PBX LD TERMINAL SWITCHBOARD IDD CAPABLE PORT	UEPXE	$2.07	$2.00	$1.85	$2.61	$2.20	$2.11	$2.00	$2.35
			2-WIRE VOICE UNBUNDLED 2-WAY PBX KENTUCKY ROOM AREA CALLING PORT WITHOUT LUD	UEPXF	NA	NA	NA	$2.61	NA	NA	NA	NA
			2-WIRE VOICE UNBUNDLED PBX KENTUCKY LUD AREA CALLING POR	UEPXG	NA	NA	NA	$2.61	NA	NA	NA	NA
			2-WIRE VOICE UNBUNDLED PBX KENTUCKY PREMIUM CALLING POR	UEPXH	NA	NA	NA	$2.61	NA	NA	NA	NA
			2-WIRE VOICE UNBUNDLED 2-WAY KENTUCKY AREA CALLING PORT WITHOUT LUD	UEPXJ	NA	NA	NA	$2.61	NA	NA	NA	NA
			2-WIRE VOICE UNBUNDLED 2-WAY PBX LOUISIANA LOCAL OPTIONAL CALLING PORT	UEPXK	NA	NA	NA	NA	$2.20	NA	NA	NA
			2-WIRE VOICE UNBUNDLED 2-WAY PBX HOTEL/HOSPITAL ECONOMY ADMINISTRATIVE CALLING PORT	UEPXL	$2.07	$2.00	$1.85	$2.61	$2.20	$2.11	$2.00	$2.35
			2-WIRE VOICE UNBUNDLED 2-WAY PBX HOTEL/HOSPITAL ECONOMY ROOM CALLING PORT	URPXM	$2.07	$2.00	$1.85	$2.61	$2.20	$2.11	$2.00	$2.35
			2-WIRE VOICE UNBUNDLED 1-WAY OUTGOING PBX HOTEL/HOSPITAL ECONOMY ADMINIATRATIVE CALLING PORTTENNESSEE CALLING PORT	UEPXN	NA	NA	NA	NA	NA	NA	NA	NA
			2-WIRE VOICE UNBUNDLED 1-WAY OUTGOING PBX HOTEL/HOSPITAL DIACOUNT ROOM CALLING PORT	UEPXO	$2.07	$2.00	$1.85	$2.61	$2.20	$2.11	$2.00	$2.35
			2-WIRE VOICE UNBUNDLED 1-WAY OUTGOING PBX LOUISIANA LOCAL DISCOUNT CALLING PORT	UEPXP	NA	NA	NA	NA	$2.20	NA	NA	NA
			2-WIRE VOICE UNBUNDLED 2-WAY PBX MISSISSIPPI LOCAL ECONOMY CALLING PORT	UEPXQ	NA	NA	NA	NA	NA	$2.11	NA	NA

BELLSOUTH/ACCESS INTEGRATED RATES
NETWORK ELEMENTS
AND OTHER SERVICES
PORTS

			2-WIRE VOICE UNBUNDLED 2-WAY PBX MISSISSIPPI LOCAL OPTIONAL CALLING PORT	UEPXR	NA	NA	NA	NA	NA	$2.11	NA	NA
			2-WIRE VOICE UNBUNDLED 1-WAY OUTGOING PBXMEASURED POR	UEPXS	$2.07	$2.00	$1.85	$2.61	$2.20	$2.11	$2.00	$2.35
			2-WIRE VOICE UNBUNDLED 2-WAY PBX SOUTH CAROLINA AREA PLUS CALLING PORT	UEPXT	NA	NA	NA	NA	NA	NA	NA	$2.35
			2-WIRE VOICE UNBUNDLED PBX COLLIERVILLE & MEMPHIS CALLING PORT	UEPXU	NA	NA	NA	NA	NA	NA	NA	NA
			2-WIRE VOICE UNBUNDLED 2-WAY PBX TENNESSEE REGIONSERV CALLING PORT	UEPXV	NA	NA	NA	NA	NA	NA	NA	NA
			UNBUNDLED LOOP BILLING USOC (REQUIRES ONE PER PORT)	UEPLX								
			LOCAL NUMBER PORTABILITY (REQUIRES ONE PER PORT)	LNPCP								
			NRC - 1st	UEPPC	$21.93	$38.00	$17.16	$36.47	$16.43	$22.98	$24.04	$24.36
			2 WIRE VOICE UNBUNDLED COMBINATION 2-WAY PBX TRUNK - Residenc	UEPRD	$21.93	$38.00	$17.16	$36.47	$16.43	$22.98	$21.60	$24.36
			LINE SIDE UNBUNDLED COMBINATION 2-WAY PBX TRUNK - BUSINESS	UEPPC	$21.93	$38.00	$17.16	$36.47	$16.43	$22.98	$24.04	$24.36
			LINE SIDE UNBUNDLED OUTWARD PBX TRUNK - BUSINESS	UEPPO	$21.93	$38.00	$17.16	$36.47	$16.43	$22.98	$24.04	$24.36
			LINE SIDE UNBUNDLED INCOMING PBX TRUNK - BUSINESS	UEPP1	$21.93	$38.00	$17.16	$36.47	$16.43	$22.98	$24.04	$24.36
			LONG DISTANCE TERMINAL PBX TRUNK-BUSINESS	UEPLD	$21.93	$38.00	$17.16	$36.47	$16.43	$22.98	$24.04	$24.36
			TN 2-WAY CALLING PLAN PBX TRUNK - BUSINESS	UEPT2	$21.93	$38.00	$17.16	$36.47	$16.43	$22.98	$24.04	$24.36
			TN OUTWARD CALLING PLAN PBX TRUNK - BUSINESS	UEPTO	$21.93	$38.00	$17.16	$36.47	$16.43	$22.98	$24.04	$24.36
			2-WIRE VOICE UNBUNDLED 2-WAY COMBINATION PBX ALABAMA CALLING PORT	UEPA2	$21.93	NA	NA	NA	NA	NA	NA	NA
			2-WIRE VOICE UNBUNDLED 2-WAY COMBINATION PBX LOUISIANA CALLING PORT	UEPL2	NA	NA	NA	NA	$16.43	NA	NA	NA
			2-WIRE VOICE UNBUNDLED PBX LD TERMINAL PORTS	UEPLD	$21.93	$38.00	$17.16	$36.47	$16.43	$22.98	$24.04	$24.36
			2-WIRE VOICE UNBUNDLED 2-WAY COMBINATION PBX TENNESSEE CALLING PORT	UEPT2	NA	NA	NA	NA	NA	NA	NA	NA
			2-WIRE VOICE UNBUNDLED 1-WAY OUTGOING PBX TENNESSEE CALLING PORT	UEPTO	NA	NA	NA	NA	NA	NA	NA	NA
			2-WIRE VOICE UNBUNDLED 2-WAY COMBINATION PBX USAGE POR	UEPXA	$21.93	$38.00	$17.16	$36.47	$16.43	$22.98	$24.04	$24.36
			2-WIRE VOICE UNBUNDLED PBX TOLL TERMINAL HOTEL PORTS	UEPXB	$21.93	$38.00	$17.16	$36.47	$16.43	$22.98	$24.04	$24.36
			2-WIRE VOICE UNBUNDLED PBX LD DDD TERMINALS POR	UEPXC	$21.93	$38.00	$17.16	$36.47	$16.43	$22.98	$24.04	$24.36
			2-WIRE VOICE UNBUNDLED PBX LD TERMINAL SWITCHBOARD POR	UEPXD	$21.93	$38.00	$17.16	$36.47	$16.43	$22.98	$24.04	$24.36
			2-WIRE VOICE UNBUNDLED PBX LD TERMINAL SWITCHBOARD IDD CAPABLE PORT	UEPXE	$21.93	$38.00	$17.16	$36.47	$16.43	$22.98	$24.04	$24.36
			2-WIRE VOICE UNBUNDLED 2-WAY PBX KENTUCKY ROOM AREA CALLING PORT WITHOUT LUD	UEPXF	NA	NA	NA	$36.47	NA	NA	NA	NA
			2-WIRE VOICE UNBUNDLED PBX KENTUCKY LUD AREA CALLING POR	UEPXG	NA	NA	NA	$36.47	NA	NA	NA	NA
			2-WIRE VOICE UNBUNDLED PBX KENTUCKY PREMIUM CALLING POR	UEPXH	NA	NA	NA	$36.47	NA	NA	NA	NA
			2-WIRE VOICE UNBUNDLED 2-WAY KENTUCKY AREA CALLING PORT WITHOUT LUD	UEPXJ	NA	NA	NA	$36.47	NA	NA	NA	NA
			2-WIRE VOICE UNBUNDLED 2-WAY PBX LOUISIANA LOCAL OPTIONAL CALLING PORT	UEPXK	NA	NA	NA	NA	$16.43	NA	NA	NA
			2-WIRE VOICE UNBUNDLED 2-WAY PBX HOTEL/HOSPITAL ECONOMY ADMINISTRATIVE CALLING PORT	UEPXL	$21.93	$38.00	$17.16	$36.47	$16.43	$22.98	$24.04	$24.36
			2-WIRE VOICE UNBUNDLED 2-WAY PBX HOTEL/HOSPITAL ECONOMY ROOM CALLING PORT	URPXM	$21.93	$38.00	$17.16	$36.47	$16.43	$22.98	$24.04	$24.36
			2-WIRE VOICE UNBUNDLED 1-WAY OUTGOING PBX HOTEL/HOSPITAL ECONOMY ADMINIATRATIVE CALLING PORTTENNESSEE CALLING PORT	UEPXN	NA	NA	NA	NA	NA	NA	NA	NA
			2-WIRE VOICE UNBUNDLED 1-WAY OUTGOING PBX HOTEL/HOSPITAL DIACOUNT ROOM CALLING PORT	UEPXO	$21.93	$38.00	$17.16	$36.47	$16.43	$22.98	$24.04	$24.36
			2-WIRE VOICE UNBUNDLED 1-WAY OUTGOING PBX LOUISIANA LOCAL DISCOUNT CALLING PORT	UEPXP	NA	NA	NA	NA	$16.43	NA	NA	NA
			2-WIRE VOICE UNBUNDLED 2-WAY PBX MISSISSIPPI LOCAL ECONOMY CALLING PORT	UEPXQ	NA	NA	NA	NA	NA	$22.98	NA	NA
			2-WIRE VOICE UNBUNDLED 2-WAY PBX MISSISSIPPI LOCAL OPTIONAL CALLING PORT	UEPXR	NA	NA	NA	NA	NA	$22.98	NA	NA
			2-WIRE VOICE UNBUNDLED 1-WAY OUTGOING PBXMEASURED POR	UEPXS	$21.93	$38.00	$17.16	$36.47	$16.43	$22.98	$24.04	$24.36

BELLSOUTH/ACCESS INTEGRATED RATES
NETWORK ELEMENTS
AND OTHER SERVICES
PORTS

		2-WIRE VOICE UNBUNDLED 2-WAY PBX SOUTH CAROLINA AREA PLUS CALLING PORT	UEPXT	NA	NA	NA	NA	NA	NA	NA	$24.36
		2-WIRE VOICE UNBUNDLED PBX COLLIERVILLE & MEMPHIS CALLING PORT	UEPXU	NA	NA	NA	NA	NA	NA	NA	NA
		2-WIRE VOICE UNBUNDLED 2-WAY PBX TENNESSEE REGIONSERV CALLING PORT	UEPXV	NA	NA	NA	NA	NA	NA	NA	NA
		NRC - Add'l									
		2 WIRE VOICE UNBUNDLED COMBINATION 2-WAY PBX TRUNK - Residenc	UEPRD	$21.93	$15.00	$17.16	$36.47	$16.43	$22.98	$21.60	$24.36
		LINE SIDE UNBUNDLED COMBINATION 2-WAY PBX TRUNK - BUSINESS	UEPPC	$21.93	$15.00	$17.16	$36.47	$16.43	$22.98	$9.05	$24.36
		LINE SIDE UNBUNDLED OUTWARD PBX TRUNK - BUSINESS	UEPPO	$21.93	$15.00	$17.16	$36.47	$16.43	$22.98	$9.05	$24.36
		LINE SIDE UNBUNDLED INCOMING PBX TRUNK - BUSINESS	UEPP1	$21.93	$15.00	$17.16	$36.47	$16.43	$22.98	$9.05	$24.36
		LONG DISTANCE TERMINAL PBX TRUNK-BUSINESS	UEPLD	$21.93	$15.00	$17.16	$36.47	$16.43	$22.98	$9.05	$24.36
		TN 2-WAY CALLING PLAN PBX TRUNK - BUSINESS	UEPT2	$21.93	$15.00	$17.16	$36.47	$16.43	$22.98	$9.05	$24.36
		TN OUTWARD CALLING PLAN PBX TRUNK - BUSINESS	UEPTO	$21.93	$15.00	$17.16	$36.47	$16.43	$22.98	$9.05	$24.36
		2-WIRE VOICE UNBUNDLED 2-WAY COMBINATION PBX ALABAMA CALLING PORT	UEPA2	$21.93	NA	NA	NA	NA	NA	NA	NA
		2-WIRE VOICE UNBUNDLED 2-WAY COMBINATION PBX LOUISIANA CALLING PORT	UEPL2	NA	NA	NA	NA	$16.43	NA	NA	NA
		2-WIRE VOICE UNBUNDLED PBX LD TERMINAL PORTS	UEPLD	$21.93	$15.00	$17.16	$36.47	$16.43	$22.98	$9.05	$24.36
		2-WIRE VOICE UNBUNDLED 2-WAY COMBINATION PBX TENNESSEE CALLING PORT	UEPT2	NA	NA	NA	NA	NA	NA	NA	NA
		2-WIRE VOICE UNBUNDLED 1-WAY OUTGOING PBX TENNESSEE CALLING PORT	UEPTO	NA	NA	NA	NA	NA	NA	NA	NA
		2-WIRE VOICE UNBUNDLED 2-WAY COMBINATION PBX USAGE POR	UEPXA	$21.93	$15.00	$17.16	$36.47	$16.43	$22.98	$9.05	$24.36
		2-WIRE VOICE UNBUNDLED PBX TOLL TERMINAL HOTEL PORTS	UEPXB	$21.93	$15.00	$17.16	$36.47	$16.43	$22.98	$9.05	$24.36
		2-WIRE VOICE UNBUNDLED PBX LD DDD TERMINALS POR	UEPXC	$21.93	$15.00	$17.16	$36.47	$16.43	$22.98	$9.05	$24.36
		2-WIRE VOICE UNBUNDLED PBX LD TERMINAL SWITCHBOARD POR	UEPXD	$21.93	$15.00	$17.16	$36.47	$16.43	$22.98	$9.05	$24.36
		2-WIRE VOICE UNBUNDLED PBX LD TERMINAL SWITCHBOARD IDC CAPABLE PORT	UEPXE	$21.93	$15.00	$17.16	$36.47	$16.43	$22.98	$9.05	$24.36
		2-WIRE VOICE UNBUNDLED 2-WAY PBX KENTUCKY ROOM AREA CALLING PORT WITHOUT LUD	UEPXF	NA	NA	NA	$36.47	NA	NA	NA	NA
		2-WIRE VOICE UNBUNDLED PBX KENTUCKY LUD AREA CALLING POR	UEPXG	NA	NA	NA	$37.47	NA	NA	NA	NA
		2-WIRE VOICE UNBUNDLED PBX KENTUCKY PREMIUM CALLING POR	UEPXH	NA	NA	NA	$38.47	NA	NA	NA	NA
		2-WIRE VOICE UNBUNDLED 2-WAY KENTUCKY AREA CALLING PORT WITHOUT LUD	UEPXJ	NA	NA	NA	$39.47	NA	NA	NA	NA
		2-WIRE VOICE UNBUNDLED 2-WAY PBX LOUISIANA LOCAL OPTIONAL CALLING PORT	UEPXK	NA	NA	NA	NA	$16.43	NA	NA	NA
		2-WIRE VOICE UNBUNDLED 2-WAY PBX HOTEL/HOSPITAL ECONOMY ADMINISTRATIVE CALLING PORT	UEPXL	$21.93	$15.00	$17.16	$36.47	$16.43	$22.98	$9.05	$24.36
		2-WIRE VOICE UNBUNDLED 2-WAY PBX HOTEL/HOSPITAL ECONOMY ROOM CALLING PORT	URPXM	$21.93	$15.00	$17.16	$36.47	$16.43	$22.98	$9.05	$24.36
		2-WIRE VOICE UNBUNDLED 1-WAY OUTGOING PBX HOTEL/HOSPITAL ECONOMY ADMINIATRATIVE CALLING PORTTENNESSEE CALLING PORT	UEPXN	NA	NA	NA	NA	NA	NA	NA	NA
		2-WIRE VOICE UNBUNDLED 1-WAY OUTGOING PBX HOTEL/HOSPITAL DIACOUNT ROOM CALLING PORT	UEPXO	$21.93	$15.00	$17.16	$36.47	$16.43	$22.98	$9.05	$24.36
		2-WIRE VOICE UNBUNDLED 1-WAY OUTGOING PBX LOUISIANA LOCAL DISCOUNT CALLING PORT	UEPXP	NA	NA	NA	NA	$16.43	NA	NA	NA
		2-WIRE VOICE UNBUNDLED 2-WAY PBX MISSISSIPPI LOCAL ECONOMY CALLING PORT	UEPXQ	NA	NA	NA	NA	NA	$22.98	NA	NA
		2-WIRE VOICE UNBUNDLED 2-WAY PBX MISSISSIPPI LOCAL OPTIONAL CALLING PORT	UEPXR	NA	NA	NA	NA	NA	$22.98	NA	NA
		2-WIRE VOICE UNBUNDLED 1-WAY OUTGOING PBXMEASURED POR	UEPXS	$21.93	$15.00	$17.16	$36.47	$16.43	$22.98	$9.05	$24.36
		2-WIRE VOICE UNBUNDLED 2-WAY PBX SOUTH CAROLINA AREA PLUS CALLING PORT	UEPXT	NA	NA	NA	NA	NA	NA	NA	$24.36
		2-WIRE VOICE UNBUNDLED PBX COLLIERVILLE & MEMPHIS CALLING PORT	UEPXU	NA	NA	NA	NA	NA	NA	NA	NA
		2-WIRE VOICE UNBUNDLED 2-WAY PBX TENNESSEE REGIONSERV CALLING PORT	UEPXV	NA	NA	NA	NA	NA	NA	NA	NA

BELLSOUTH/ACCESS INTEGRATED RATES
NETWORK ELEMENTS
AND OTHER SERVICES
PORTS

			NRC - Disconnect Charge - 1st								
			2 WIRE VOICE UNBUNDLED COMBINATION 2-WAY PBX TRUNK - Residence		$6.21	NA	NA	NA	$3.77	$6.56	NA	NA
			LINE SIDE UNBUNDLED COMBINATION 2-WAY PBX TRUNK - BUSINESS		$6.21	NA	NA	NA	$3.77	$6.56	NA	NA
			LINE SIDE UNBUNDLED OUTWARD PBX TRUNK - BUSINESS		$6.21	NA	NA	NA	$3.77	$6.56	NA	NA
			LINE SIDE UNBUNDLED INCOMING PBX TRUNK - BUSINESS		$6.21	NA	NA	NA	$3.77	$6.56	NA	NA
			LONG DISTANCE TERMINAL PBX TRUNK-BUSINESS		$6.21	NA	NA	NA	$3.77	$6.56	NA	NA
			TN 2-WAY CALLING PLAN PBX TRUNK - BUSINESS		$6.21	NA	NA	NA	$3.77	$6.56	NA	NA
			TN OUTWARD CALLING PLAN PBX TRUNK - BUSINESS		$6.21	NA	NA	NA	$3.77	$6.56	NA	NA
			2-WIRE VOICE UNBUNDLED 2-WAY COMBINATION PBX ALABAMA CALLING PORT		$6.21	NA	NA	NA	NA	NA	NA	NA
			2-WIRE VOICE UNBUNDLED 2-WAY COMBINATION PBX LOUISIANA CALLING PORT		NA	NA	NA	NA	$3.77	NA	NA	NA
			2-WIRE VOICE UNBUNDLED PBX LD TERMINAL PORTS		$6.21	NA	NA	NA	$3.77	$6.56	NA	NA
			2-WIRE VOICE UNBUNDLED 2-WAY COMBINATION PBX TENNESSEE CALLING PORT		NA	NA	NA	NA	NA	NA	NA	NA
			2-WIRE VOICE UNBUNDLED 1-WAY OUTGOING PBX TENNESSEE CALLING PORT		NA	NA	NA	NA	NA	NA	NA	NA
			2-WIRE VOICE UNBUNDLED 2-WAY COMBINATION PBX USAGE POR		$6.21	NA	NA	NA	$3.77	$6.56	NA	NA
			2-WIRE VOICE UNBUNDLED PBX TOLL TERMINAL HOTEL PORTS		$6.21	NA	NA	NA	$3.77	$6.56	NA	NA
			2-WIRE VOICE UNBUNDLED PBX LD DDD TERMINALS POR		$6.21	NA	NA	NA	$3.77	$6.56	NA	NA
			2-WIRE VOICE UNBUNDLED PBX LD TERMINAL SWITCHBOARD POR		$6.21	NA	NA	NA	$3.77	$6.56	NA	NA
			2-WIRE VOICE UNBUNDLED PBX LD TERMINAL SWITCHBOARD IDL CAPABLE PORT		$6.21	NA	NA	NA	$3.77	$6.56	NA	NA
			2-WIRE VOICE UNBUNDLED 2-WAY PBX KENTUCKY ROOM AREA CALLING PORT WITHOUT LUD		NA	NA	NA	NA	NA	NA	NA	NA
			2-WIRE VOICE UNBUNDLED PBX KENTUCKY LUD AREA CALLING POR		NA	NA	NA	NA	NA	NA	NA	NA
			2-WIRE VOICE UNBUNDLED PBX KENTUCKY PREMIUM CALLING POR		NA	NA	NA	NA	NA	NA	NA	NA
			2-WIRE VOICE UNBUNDLED 2-WAY KENTUCKY AREA CALLING PORT WITHOUT LUD		NA	NA	NA	NA	NA	NA	NA	NA
			2-WIRE VOICE UNBUNDLED 2-WAY PBX LOUISIANA LOCAL OPTIONAL CALLING PORT		NA	NA	NA	NA	$3.77	NA	NA	NA
			2-WIRE VOICE UNBUNDLED 2-WAY PBX HOTEL/HOSPITAL ECONOMY ADMINISTRATIVE CALLING PORT		$6.21	NA	NA	NA	$3.77	$6.56	NA	NA
			2-WIRE VOICE UNBUNDLED 2-WAY PBX HOTEL/HOSPITAL ECONOMY ROOM CALLING PORT		$6.21	NA	NA	NA	$3.77	$6.56	NA	NA
			2-WIRE VOICE UNBUNDLED 1-WAY OUTGOING PBX HOTEL/HOSPITAL ECONOMY ADMINIATRATIVE CALLING PORTTENNESSEE CALLING PORT		NA	NA	NA	NA	NA	NA	NA	NA
			2-WIRE VOICE UNBUNDLED 1-WAY OUTGOING PBX HOTEL/HOSPITAL DIACOUNT ROOM CALLING PORT		$6.21	NA	NA	NA	$3.77	$6.56	NA	NA
			2-WIRE VOICE UNBUNDLED 1-WAY OUTGOING PBX LOUISIANA LOCAL DISCOUNT CALLING PORT		$6.21	NA	NA	NA	$3.77	$6.56	NA	NA
			2-WIRE VOICE UNBUNDLED 2-WAY PBX MISSISSIPPI LOCAL ECONOMY CALLING PORT		NA	NA	NA	NA	NA	$6.56	NA	NA
			2-WIRE VOICE UNBUNDLED 2-WAY PBX MISSISSIPPI LOCAL OPTIONAL CALLING PORT		NA	NA	NA	NA	NA	$6.56	NA	NA
			2-WIRE VOICE UNBUNDLED 1-WAY OUTGOING PBXMEASURED POR		$6.21	NA	NA	NA	$3.77	$6.56	NA	NA
			2-WIRE VOICE UNBUNDLED 2-WAY PBX SOUTH CAROLINA AREA PLUS CALLING PORT		NA	NA	NA	NA	NA	NA	NA	NA
			2-WIRE VOICE UNBUNDLED PBX COLLIERVILLE & MEMPHIS CALLING PORT		NA	NA	NA	NA	NA	NA	NA	NA
			2-WIRE VOICE UNBUNDLED 2-WAY PBX TENNESSEE REGIONSERV CALLING PORT		NA	NA	NA	NA	NA	NA	NA	NA
			NRC - Disconnect Charge - Add'									
			2 WIRE VOICE UNBUNDLED COMBINATION 2-WAY PBX TRUNK - Residence		$6.21	NA	NA	NA	$3.77	$6.56	NA	NA
			LINE SIDE UNBUNDLED COMBINATION 2-WAY PBX TRUNK - BUSINESS		$6.21	NA	NA	NA	$3.77	$6.56	NA	NA
			LINE SIDE UNBUNDLED OUTWARD PBX TRUNK - BUSINESS		$6.21	NA	NA	NA	$3.77	$6.56	NA	NA
			LINE SIDE UNBUNDLED INCOMING PBX TRUNK - BUSINESS		$6.21	NA	NA	NA	$3.77	$6.56	NA	NA
			LONG DISTANCE TERMINAL PBX TRUNK-BUSINESS		$6.21	NA	NA	NA	$3.77	$6.56	NA	NA
			TN 2-WAY CALLING PLAN PBX TRUNK - BUSINESS		$6.21	NA	NA	NA	$3.77	$6.56	NA	NA

BELLSOUTH/ACCESS INTEGRATED RATES
NETWORK ELEMENTS
AND OTHER SERVICES
PORTS

		TN OUTWARD CALLING PLAN PBX TRUNK - BUSINESS		$6.21	NA	NA	NA	$3.77	$6.56	NA	NA
		2-WIRE VOICE UNBUNDLED 2-WAY COMBINATION PBX ALABAMA CALLING PORT		$6.21	NA	NA	NA	NA	NA	NA	NA
		2-WIRE VOICE UNBUNDLED 2-WAY COMBINATION PBX LOUISIANA CALLING PORT		NA	NA	NA	NA	$3.77	NA	NA	NA
		2-WIRE VOICE UNBUNDLED PBX LD TERMINAL PORTS		$6.21	NA	NA	NA	$3.77	$6.56	NA	NA
		2-WIRE VOICE UNBUNDLED 2-WAY COMBINATION PBX TENNESSEE CALLING PORT		NA	NA	NA	NA	NA	NA	NA	NA
		2-WIRE VOICE UNBUNDLED 1-WAY OUTGOING PBX TENNESSEE CALLING PORT		NA	NA	NA	NA	NA	NA	NA	NA
		2-WIRE VOICE UNBUNDLED 2-WAY COMBINATION PBX USAGE POR		$6.21	NA	NA	NA	$3.77	$6.56	NA	NA
		2-WIRE VOICE UNBUNDLED PBX TOLL TERMINAL HOTEL PORTS		$6.21	NA	NA	NA	$3.77	$6.56	NA	NA
		2-WIRE VOICE UNBUNDLED PBX LD DDD TERMINALS POR		$6.21	NA	NA	NA	$3.77	$6.56	NA	NA
		2-WIRE VOICE UNBUNDLED PBX LD TERMINAL SWITCHBOARD POR		$6.21	NA	NA	NA	$3.77	$6.56	NA	NA
		2-WIRE VOICE UNBUNDLED PBX LD TERMINAL SWITCHBOARD IDC CAPABLE PORT		$6.21	NA	NA	NA	$3.77	$6.56	NA	NA
		2-WIRE VOICE UNBUNDLED 2-WAY PBX KENTUCKY ROOM AREA CALLING PORT WITHOUT LUD		NA	NA	NA	NA	NA	NA	NA	NA
		2-WIRE VOICE UNBUNDLED PBX KENTUCKY LUD AREA CALLING POR		NA	NA	NA	NA	NA	NA	NA	NA
		2-WIRE VOICE UNBUNDLED PBX KENTUCKY PREMIUM CALLING POR		NA	NA	NA	NA	NA	NA	NA	NA
		2-WIRE VOICE UNBUNDLED 2-WAY KENTUCKY AREA CALLING PORT WITHOUT LUD		NA	NA	NA	NA	NA	NA	NA	NA
		2-WIRE VOICE UNBUNDLED 2-WAY PBX LOUISIANA LOCAL OPTIONAL CALLING PORT		NA	NA	NA	NA	$3.77	NA	NA	NA
		2-WIRE VOICE UNBUNDLED 2-WAY PBX HOTEL/HOSPITAL ECONOMY ADMINISTRATIVE CALLING PORT		$6.21	NA	NA	NA	$3.77	$6.56	NA	NA
		2-WIRE VOICE UNBUNDLED 2-WAY PBX HOTEL/HOSPITAL ECONOMY ROOM CALLING PORT		$6.21	NA	NA	NA	$3.77	$6.56	NA	NA
		2-WIRE VOICE UNBUNDLED 1-WAY OUTGOING PBX HOTEL/HOSPITAL ECONOMY ADMINIATRATIVE CALLING PORTTENNESSEE CALLING PORT		NA	NA	NA	NA	NA	NA	NA	NA
		2-WIRE VOICE UNBUNDLED 1-WAY OUTGOING PBX HOTEL/HOSPITAL DIACOUNT ROOM CALLING PORT		$6.21	NA	NA	NA	$3.77	$6.56	NA	NA
		2-WIRE VOICE UNBUNDLED 1-WAY OUTGOING PBX LOUISIANA LOCAL DISCOUNT CALLING PORT		$6.21	NA	NA	NA	$3.77	$6.56	NA	NA
		2-WIRE VOICE UNBUNDLED 2-WAY PBX MISSISSIPPI LOCAL ECONOMY CALLING PORT		NA	NA	NA	NA	NA	$6.56	NA	NA
		2-WIRE VOICE UNBUNDLED 2-WAY PBX MISSISSIPPI LOCAL OPTIONAL CALLING PORT		NA	NA	NA	NA	NA	$6.56	NA	NA
		2-WIRE VOICE UNBUNDLED 1-WAY OUTGOING PBXMEASURED POR		$6.21	NA	NA	NA	$3.77	$6.56	NA	NA
		2-WIRE VOICE UNBUNDLED 2-WAY PBX SOUTH CAROLINA AREA PLUS CALLING PORT		NA	NA	NA	NA	NA	NA	NA	NA
		2-WIRE VOICE UNBUNDLED PBX COLLIERVILLE & MEMPHIS CALLING PORT		NA	NA	NA	NA	NA	NA	NA	NA
		2-WIRE VOICE UNBUNDLED 2-WAY PBX TENNESSEE REGIONSERV CALLING PORT		NA	NA	NA	NA	NA	NA	NA	NA
		NRC - Incremental Charge - Manual Service Order - 1s	SOMAN	$27.37	NA	$18.94	NA	$18.14	$25.52	$26.94	$41.86
		NRC - Incremental Charge - Manual Service Order - Add	SOMAN	$12.97	NA	$8.42	NA	$8.06	$11.34	$12.76	$14.46
		NRC - Incremental Charge - Manual Service Order - Disconnect - 1s	SOMAN	$17.77	NA	NA	NA	$8.94	$16.06	NA	NA
		NRC - Incremental Charge - Manual Service Order - Disconnect - Adc	SOMAN	$0.48	NA	NA	NA	NA	NA	NA	NA
	2-Wire Analog Line Port (PBX) including all available features, per month		UEPPC	NA	NA	NA	NA	NA	NA	NA	$8.67
		NRC - 1st	UEPPC	NA	NA	NA	NA	NA	NA	NA	$60.60
		NRC - Add'l	UEPPC	NA	NA	NA	NA	NA	NA	NA	$60.60
		NRC - Incremental Charge - Manual Service Order - 1s	SOMAN	NA	NA	NA	NA	NA	NA	NA	$41.86
		NRC - Incremental Charge - Manual Service Order - Add	SOMAN	NA	NA	NA	NA	NA	NA	NA	$14.46
	2-Wire Analog Line Port (PBX) including three available features, per month		UEPPC	NA	NA	NA	NA	NA	NA	NA	$5.38
		NRC - 1st	UEPPC	NA	NA	NA	NA	NA	NA	NA	$28.89
		NRC - Add'l	UEPPC	NA	NA	NA	NA	NA	NA	NA	$28.89
		NRC - Incremental Charge - Manual Service Order - 1s	SOMAN	NA	NA	NA	NA	NA	NA	NA	$41.86

BELLSOUTH/ACCESS INTEGRATED RATES
NETWORK ELEMENTS
AND OTHER SERVICES
PORTS

		NRC - Incremental Charge - Manual Service Order - Add	SOMAN	NA	NA	NA	NA	NA	NA	NA	$14.46
		2-Wire Analog Hunting, per line per month	HTGUX	See features	NA	NA	$0.29	NA	See features	NA	See features
		NRC - 1st	HTGUX	See features	NA	NA	$2.14	NA	See features	NA	See features
		NRC - Add'l	HTGUX	See features	NA	NA	$2.14	NA	See features	NA	See features
		Coin Port, per month		$2.34	NA	$2.05	$3.04	$2.50	$2.32	NA	$2.77
		NRC - 1st		$21.93	NA	$17.16	$40.71	$16.43	$22.98	NA	$24.75
		NRC - Add'l		$21.93	NA	$17.16	$40.71	$16.43	$22.98	NA	$24.75
		NRC - Disconnect Charge - 1s		$5.21	NA	NA	NA	$4.15	$6.56	NA	NA
		NRC - Disconnect Charge - Add'		$5.21	NA	NA	NA	$4.15	$6.56	NA	NA
		NRC - Incremental Charge - Manual Service Order - 1s	SOMAN	$25.93	NA	$18.94	NA	$18.14	$25.52	NA	$43.48
		NRC - Incremental Charge - Manual Service Order - Add	SOMAN	$12.97	NA	$8.42	NA	$8.06	$11.34	NA	$14.57
		NRC - Incremental Charge - Manual Service Order - Disconnect - 1s	SOMAN	$16.33	NA	NA	NA	$9.86	$16.06	NA	NA
		NRC - Incremental Charge - Manual Service Order - Disconnect - Adc	SOMAN	$0.48	NA	NA	NA	NA	NA	NA	NA
		4- Wire Coin Port, per month		NA	NA	NA	NA	NA	NA	$2.59	NA
		NRC - 1st		NA	NA	NA	NA	NA	NA	$21.60	NA
		NRC - Add'l		NA	NA	NA	NA	NA	NA	$21.60	NA
		NRC - Disconnect Charge - 1s		NA	NA	NA	NA	NA	NA	NA	NA
		NRC - Disconnect Charge - Add'		NA	NA	NA	NA	NA	NA	NA	NA
		NRC - Incremental Charge - Manual Service Order - 1s		NA	NA	NA	NA	NA	NA	$26.94	NA
		NRC - Incremental Charge - Manual Service Order - Add		NA	NA	NA	NA	NA	NA	$12.76	NA
		NRC - Incremental Charge - Manual Service Order - Disconnect - 1s		NA	NA	NA	NA	NA	NA	NA	NA
		NRC - Incremental Charge - Manual Service Order - Disconnect - Adc		NA	NA	NA	NA	NA	NA	NA	NA
		Subsequent Ordering Charge – (per order, per line)		NA	NA	NA	NA	NA	NA	NA	
		NRC - Electronic - 1st		$2.88	NA	NA	NA	NA	$2.84	$5.42	$1.36
		NRC - Electronic - Add'l		$0.96	NA	NA	NA	NA	$0.95	$0.95	$0.71
		NRC - Manual - 1st		$4.80	NA	NA	NA	NA	$4.73	$1.89	$7.35
		NRC - Manual - Add'l		$0.96	NA	NA	NA	NA	$0.95	NA	$0.95
		NRC - Disconnect		$2.88	NA	NA	NA	NA	$2.84	NA	NA
	End Office Switching (Port Usage)										
		End Office Switching Function, per mou	N/A	$0.0018	$0.0175	$0.0016333	$0.002562	$0.0021	$0.0023771	$0.0017000	$0.0019295
		End Office Switching Function, add'l mou (5)	N/A	NA	$0.005	NA	NA	NA	NA	NA	NA
		End Office Interoffice Trunk Port— Shared, per mou	N/A	$0.0002	NA	$0.0001564	NA	$0.0002	$0.0001927	NA	$0.0002581
	Tandem Switching (Port Usage) (Local or Access Tandem)										
		Tandem Switching Function per mou	N/A	$0.00063	$0.00029	$0.0006757	$0.001096	$0.0008	$0.0007834	$0.0009	$0.0006843
		Tandem Interoffice Trunk Port - Shared per mou			NA	$0.0002126	NA	$0.0003	$0.0002834	NA	$0.0004034
	NOTES:										
	1	Port rate includes all available features									
	2	Transmission/usage charges associated with POTS circuit switched usage w also apply to circuit switched voice and/or circuit switched data transmission by B-Channels associated with 2-wire ISDN ports									
	3	Access to B Channel or D Channel Packet capabilities will be avail- able only through BFR/New Business Request Process. Rates for the packet capabilities will be determined via the Bona Fide Request/New Business Request Process.									
	4	This rate element is for those states which have a specific rate for User Profile per B Channel.									
	5	This rate element is for use in those states with a different rate for additional minutes of use.									

BELLSOUTH/ACCESS INTEGRATED RATES
NETWORK ELEMENTS
AND OTHER SERVICES
LOOP/PORT COMBINATIONS

DESCRIPTION	USOC	AL	FL	GA	KY	LA	MS	NC	SC
UNBUNDLED LOOP COMBINATIONS									
Unbundled Loop/Port Combinations (Note 4)									
MARKET RATES (INCLUDING ALL VERTICAL FEATURES) (Note 1)									
Density Zone 1 / Top 8 MSAs in BellSouth Region			**Orlando, Ft. Lauderdale, Miami**	**Atlanta**		**New Orleans**		**Greensboro-Winston Salem-Highpoint/ Charlotte-Gastonia-Rock Hill**	
Customers with 4 or more DS0 Equivalent									
Currently Combined (Note2)									
2-Wire Voice Grade Loop with 2-Wire Line Port (Res. and Bus.)									
2-Wire Voice Grade Line Port (Res.), per month									
2- wire voice unbundled port - residence	UEPRL	NA	$14.00	$14.00	NA	$14.00	NA	$14.00	NA
2-wire voice unbundled port with caller ID - residence	UEPRC	NA	$14.00	$14.00	NA	$14.00	NA	$14.00	NA
2-wire voice unbundled port outgoing only - residence	UEPRO	NA	$14.00	$14.00	NA	$14.00	NA	$14.00	NA
2-wire voice grade unbundled Alabama extended local dialing parity port with caller ID	UEPAR	NA	NA	NA	NA	NA	NA	NA	NA
2-wire voice grade unbundled Kentucky extended local dialing parity port with caller ID	UEPRM	NA	NA	NA	NA	NA	NA	NA	NA
2-wire voice grade unbundled Louisiana extended local dialing parity port with caller ID	UEPAS	NA	NA	NA	NA	$14.00	NA	NA	NA
2-wire voice grade unbundled Mississippi extended local dialing parity port with caller ID	UEPAT	NA	NA	NA	NA	NA	NA	NA	NA
2-wire voice grade unbundled South Carolina extended local dialing parity port with caller ID	UEPAU	NA	NA	NA	NA	NA	NA	NA	NA
2-wire voice grade unbundled Tennessee extended local dialing parity port with caller ID	UEPAQ	NA	NA	NA	NA	NA	NA	NA	NA
2-wire voice unbundled Florida area calling with caller ID - residence	UEPAF	NA	$14.00	NA	NA	NA	NA	NA	NA
2-wire voice unbundled Louisiana Area Plus with caller ID - residence (RUL)	UEPAG	NA	NA	NA	NA	$14.00	NA	NA	NA
2-wire voice unbundled Louisiana Area Plus with caller ID - residence (AC7)	UEPAH	NA	NA	NA	NA	$14.00	NA	NA	NA
2-wire voice unbundled South Carolina Area Calling port with Caller ID - residence (LW8)	UEPAJ	NA	NA	NA	NA	NA	NA	NA	NA
2-wire voice unbundled Tennessee Area Calling port with Caller ID - residence (F2R)	UEPAK	NA	NA	NA	NA	NA	NA	NA	NA
2-wire voice unbundled Tennessee Area Calling port with Caller ID - residence (TACER)	UEPAL	NA	NA	NA	NA	NA	NA	NA	NA
2-wire voice unbundled Tennessee Area Calling port with Caller ID - residence (TACSR)	UEPAM	NA	NA	NA	NA	NA	NA	NA	NA
2-wire voice unbundled Tennessee Area Calling port with Caller ID - residence (1MF2X)	UEPAN	NA	NA	NA	NA	NA	NA	NA	NA
2-wire voice unbundled Tennessee Area Calling port with Caller ID - residence (2MR)	UEPAO	NA	NA	NA	NA	NA	NA	NA	NA
2-wire voice unbundled res, low usage line port with Caller ID (LUM)	UEPAP	NA	$14.00	$14.00	NA	$14.00	NA	$14.00	NA
2-Wire Voice Grade Line Port (Bus.), per month									
2-wire voice unbundled port without Caller ID	UEPBL	NA	$14.00	$14.00	NA	$14.00	NA	$14.00	NA
2-wire voice unbundled port with unbundled port with Caller+E484 ID	UEPBC	NA	$14.00	$14.00	NA	$14.00	NA	$14.00	NA
2-wire voice unbundled outgoing only port	UEPBO	NA	$14.00	$14.00	NA	$14.00	NA	$14.00	NA
2-wire voice grade unbundled Alabama extended local dialing parity port with caller ID	UEPAW	NA	NA	NA	NA	NA	NA	NA	NA
2-wire voice grade unbundled Kentucky extended local dialing parity port with caller ID	UEPBM	NA	NA	NA	NA	NA	NA	NA	NA
2-wire voice grade unbundled Louisiana extended local dialing parity port with caller ID	UEPAX	NA	NA	NA	NA	$14.00	NA	NA	NA
2-wire voice grade unbundled Mississippi extended local dialing parity port with caller ID	UEPAY	NA	NA	NA	NA	NA	NA	NA	NA

BELLSOUTH/ACCESS INTEGRATED RATES
NETWORK ELEMENTS
AND OTHER SERVICES
LOOP/PORT COMBINATIONS

DESCRIPTION	USOC	AL	FL	GA	KY	LA	MS	NC	SC
2-wire voice grade unbundled South Carolina extended local dialing parity port with caller ID	UEPAZ	NA	NA	NA	NA	NA	NA	NA	NA
2-wire voice grade unbundled Tennessee extended local dialing parity port with caller ID	UEPAV	NA	NA	NA	NA	NA	NA	NA	NA
2-wire voice unbundled incoming only port with Caller ID	UEPB1	NA	$14.00	$14.00	NA	$14.00	NA	$14.00	NA
2-wire voice unbundled LA Bus Area Calling Port with Caller ID (BUC)	UEPAA	NA	NA	NA	NA	$14.00	NA	NA	NA
2-wire voice unbundled SC Bus Area Calling Port with Caller ID (LMB)	UEPAB	NA	NA	NA	NA	NA	NA	NA	NA
2-wire voice unbundled TN Bus 2-Way Area Calling Port Economy Option (TACC1)	UEPAC	NA	NA	NA	NA	NA	NA	NA	NA
2-wire voice unbundled TN Bus 2-Way Area Calling Port Standard Option (TACC2)	UEPAD	NA	NA	NA	NA	NA	NA	NA	NA
2-wire voice unbundled TN Bus 2-WAY Collierville and Memphis Local Calling Port (B2F)	UEPAE	NA	NA	NA	NA	NA	NA	NA	NA
2-Wire Voice Grade Loop (SL1) (Res. and Bus.)									
RC - 2-Wire Voice Grade Loop - Statewide	UEPLX	NA	NA	NA	NA	NA	NA	$14.18	NA
RC - 2-Wire Voice Grade Loop Zone 1	UEPLX	NA	$14.90	$10.80	NA	$14.05	NA	NA	NA
RC - 2-Wire Voice Grade Loop Zone 2	UEPLX	NA	$18.51	$12.47	NA	$24.14	NA	NA	NA
RC - 2-Wire Voice Grade Loop Zone 3	UEPLX	NA	$24.25	$19.83	NA	$49.30	NA	NA	NA
Combination Rates									
RC - 2-Wire Voice Grade Loop with 2-Wire Line Port, Statewide	Note 8	NA	NA	NA	NA	NA	NA	$28.18	NA
RC - 2-Wire Voice Grade Loop with 2-Wire Line Port, Zone 1 (Note 6)	Note 8	NA	$28.90	$24.80	NA	$28.05	NA	NA	NA
RC - 2-Wire Voice Grade Loop with 2-Wire Line Port, Zone 2 (Note 6)	Note 8	NA	$32.51	$26.47	NA	$38.14	NA	NA	NA
RC - 2-Wire Voice Grade Loop with 2-Wire Line Port, Zone 3 (Note 6)	Note 8	NA	$38.25	$33.83	NA	$63.30	NA	NA	NA
All available features, per month	UEPVF	$2.64	$3.40	$0.00	$3.39	$3.08	$3.21	$3.04	$3.04
Nonrecurring Charges									
2-Wire Voice Grade Line Port (Res. And Bus.)									
NRC - 2- wire voice grade unbundled port/loop combination - 1st, with chang		NA	$41.50	$41.50	NA	$41.50	NA	$41.50	NA
NRC - 2- wire voice grade unbundled port/loop combination - Add'l, with chang		NA	$41.50	$41.50	NA	$41.50	NA	$41.50	NA
NRC - 2- wire voice grade unbundled port/loop combination - 1st, no chang		NA	$41.50	$41.50	NA	$41.50	NA	$41.50	NA
NRC - 2- wire voice grade unbundled port/loop combination - Add'l, no chang		NA	$41.50	$41.50	NA	$41.50	NA	$41.50	NA
NRC - 2-Wire Voice Grade Loop/Line Port Combination - Subsequer		NA	$10.00	$10.00	NA	$10.00	NA	$10.00	NA
NRC - 2-Wire Voice Grade Loop/Line Port Combination - OSS LSR Charge, Electronic per LSR received from the CLEC by one of the OSS interactive interfaces	SOMEC	NA	$2.75	$3.50	NA	$3.50	NA	$3.50	NA
NRC - 2-Wire Voice Grade Loop/Line Port Combination - Incremental Cost - Manua Svc.Order vs. Electronic - 1st	SOMAN	NA	$21.56	$33.76	NA	$31.92	NA	$40.18	NA
NRC - 2-Wire Voice Grade Loop/Line Port Combination - Incremental Cost - Manua Svc.Order vs. Electronic - Add'l	SOMAN	NA	$21.56	$7.86	NA	$7.32	NA	$9.45	NA
NRC- 2 Wire Voice Grade Loop/Line Port Combination - Subsequent Database Update Electronic		NA	TBD	TBD	NA	$2.11	NA	$1.42	NA
NRC- 2 Wire Voice Grade Loop/Line Port Combination - Subsequent Database Update Manual Service Order		NA	TBD	TBD	NA	$5.12	NA	$10.27	NA
NRC - Electronic Service Order Disconnec		NA	$0.42	NA	NA	NA	NA	NA	NA
NRC - Incremental Manual Service Order Disconnec		NA	$3.84	$20.00	NA	$20.00	NA	$20.00	NA
2-Wire Voice Grade Loop with 2-Wire Line Port PBX									
2-Wire Analog Line Port (PBX), per month									
2 WIRE VOICE UNBUNDLED COMBINATION 2-WAY PBX TRUNK - Residence	UEPRD	NA	$14.00	$14.00	NA	$14.00	NA	$14.00	NA
LINE SIDE UNBUNDLED COMBINATION 2-WAY PBX TRUNK - BUSINESS	UEPPC	NA	$14.00	$14.00	NA	$14.00	NA	$14.00	NA
LINE SIDE UNBUNDLED OUTWARD PBX TRUNK - BUSINESS	UEPPO	NA	$14.00	$14.00	NA	$14.00	NA	$14.00	NA

BELLSOUTH/ACCESS INTEGRATED RATES
NETWORK ELEMENTS
AND OTHER SERVICES
LOOP/PORT COMBINATIONS

DESCRIPTION	USOC	AL	FL	GA	KY	LA	MS	NC	SC
LINE SIDE UNBUNDLED INCOMING PBX TRUNK - BUSINESS	UEPP1	NA	$14.00	$14.00	NA	$14.00	NA	$14.00	NA
2-WIRE VOICE UNBUNDLED 2-WAY COMBINATION PBX ALABAMA CALLING PORT	UEPA2	NA	NA	NA	NA	NA	NA	NA	NA
2-WIRE VOICE UNBUNDLED 2-WAY COMBINATION PBX LOUISIANA CALLING PORT	UEPL2	NA	NA	NA	NA	$14.00	NA	NA	NA
2-WIRE VOICE UNBUNDLED PBX LD TERMINAL PORTS	UEPLD	NA	$14.00	$14.00	NA	$14.00	NA	$14.00	NA
2-WIRE VOICE UNBUNDLED 2-WAY COMBINATION PBX TENNESSEE CALLING PORT	UEPT2	NA	NA	NA	NA	NA	NA	NA	NA
2-WIRE VOICE UNBUNDLED 1-WAY OUTGOING PBX TENNESSEE CALLING PORT	UEPTO	NA	NA	NA	NA	NA	NA	NA	NA
2-WIRE VOICE UNBUNDLED 2-WAY COMBINATION PBX USAGE POR	UEPXA	NA	$14.00	$14.00	NA	$14.00	NA	$14.00	NA
2-WIRE VOICE UNBUNDLED PBX TOLL TERMINAL HOTEL PORTS	UEPXB	NA	$14.00	$14.00	NA	$14.00	NA	$14.00	NA
2-WIRE VOICE UNBUNDLED PBX LD DDD TERMINALS POR	UEPXC	NA	$14.00	$14.00	NA	$14.00	NA	$14.00	NA
2-WIRE VOICE UNBUNDLED PBX LD TERMINAL SWITCHBOARD POR	UEPXD	NA	$14.00	$14.00	NA	$14.00	NA	$14.00	NA
2-WIRE VOICE UNBUNDLED PBX LD TERMINAL SWITCHBOARD IDD CAPABLE PORT	UEPXE	NA	$14.00	$14.00	NA	$14.00	NA	$14.00	NA
2-WIRE VOICE UNBUNDLED 2-WAY PBX KENTUCKY ROOM AREA CALLING PORT WITHOUT LUD	UEPXF	NA	NA	NA	NA	NA	NA	NA	NA
2-WIRE VOICE UNBUNDLED PBX KENTUCKY LUD AREA CALLING POR	UEPXG	NA	NA	NA	NA	NA	NA	NA	NA
2-WIRE VOICE UNBUNDLED PBX KENTUCKY PREMIUM CALLING POR	UEPXH	NA	NA	NA	NA	NA	NA	NA	NA
2-WIRE VOICE UNBUNDLED 2-WAY KENTUCKY AREA CALLING PORT WITHOUT LUD	UEPXJ	NA	NA	NA	NA	NA	NA	NA	NA
2-WIRE VOICE UNBUNDLED 2-WAY PBX LOUISIANA LOCAL OPTIONAL CALLING PORT	UEPXK	NA	NA	NA	NA	$14.00	NA	NA	NA
2-WIRE VOICE UNBUNDLED 2-WAY PBX HOTEL/HOSPITAL ECONOMY ADMINISTRATIVE CALLING PORT	UEPXL	NA	$14.00	$14.00	NA	$14.00	NA	$14.00	NA
2-WIRE VOICE UNBUNDLED 2-WAY PBX HOTEL/HOSPITAL ECONOMY ROOM CALLING PORT	UEPXM	NA	$14.00	$14.00	NA	$14.00	NA	$14.00	NA
2-WIRE VOICE UNBUNDLED 1-WAY OUTGOING PBX HOTEL/HOSPITAL ECONOMY ADMINIATRATIVE CALLING PORTTENNESSEE CALLING PORT	UEPXN	NA	NA	NA	NA	NA	NA	NA	NA
2-WIRE VOICE UNBUNDLED 1-WAY OUTGOING PBX HOTEL/HOSPITAL DIACOUNT ROOM CALLING PORT	UEPXO	NA	$14.00	$14.00	NA	$14.00	NA	$14.00	NA
2-WIRE VOICE UNBUNDLED 1-WAY OUTGOING PBX LOUISIANA LOCAL DISCOUNT CALLING PORT	UEPXP	NA	NA	NA	NA	$14.00	NA	NA	NA
2-WIRE VOICE UNBUNDLED 2-WAY PBX MISSISSIPPI LOCAL ECONOMY CALLING PORT	UEPXQ	NA	NA	NA	NA	NA	NA	NA	NA
2-WIRE VOICE UNBUNDLED 2-WAY PBX MISSISSIPPI LOCAL OPTIONAL CALLING PORT	UEPXR	NA	NA	NA	NA	NA	NA	NA	NA
2-WIRE VOICE UNBUNDLED 1-WAY OUTGOING PBXMEASURED POR	UEPXS	NA	$14.00	$14.00	NA	$14.00	NA	$14.00	NA
2-WIRE VOICE UNBUNDLED 2-WAY PBX SOUTH CAROLINA AREA PLUS CALLING PORT	UEPXT	NA	NA	NA	NA	NA	NA	NA	NA
2-WIRE VOICE UNBUNDLED PBX COLLIERVILLE & MEMPHIS CALLING PORT	UEPXU	NA	NA	NA	NA	NA	NA	NA	NA
2-WIRE VOICE UNBUNDLED 2-WAY PBX TENNESSEE REGIONSERV CALLING PORT	UEPXV	NA	NA	NA	NA	NA	NA	NA	NA
LOCAL NUMBER PORTABILITY (REQUIRES ONE PER PORT)	LNPCP								
2-Wire Voice Grade Loop (SL1)									
RC - 2- Wire Voice Grade Loop - Statewide	UEPLX	NA	NA	NA	NA	NA	NA	$14.18	NA
RC - 2- Wire Voice Grade Loop - Zone 1	UEPLX	NA	$14.90	$10.80	NA	$14.05	NA	NA	NA
RC - 2- Wire Voice Grade Loop - Zone 2	UEPLX	NA	$18.51	$12.47	NA	$24.14	NA	NA	NA
RC - 2- Wire Voice Grade Loop - Zone 3	UEPLX	NA	$24.25	$19.83	NA	$49.30	NA	NA	NA
RC - 2- Wire Voice Grade Loop - Zone 4	UEPLX	NA	NA	NA	NA	NA	NA	NA	NA
Combination Rates									
RC - 2-Wire Voice Grade Loop with 2-Wire Line Port, Statewide	Note 8	NA	NA	NA	NA	NA	NA	$28.18	NA
RC - 2-Wire Voice Grade Loop with 2-Wire Line Port, Zone 1 (Note 6)	Note 8	NA	$28.90	$24.80	NA	$28.05	NA	NA	NA
RC - 2-Wire Voice Grade Loop with 2-Wire Line Port, Zone 2 (Note 6)	Note 8	NA	$32.51	$26.47	NA	$38.14	NA	NA	NA

BELLSOUTH/ACCESS INTEGRATED RATES
NETWORK ELEMENTS
AND OTHER SERVICES
LOOP/PORT COMBINATIONS

DESCRIPTION	USOC	AL	FL	GA	KY	LA	MS	NC	SC
RC - 2-Wire Voice Grade Loop with 2-Wire Line Port, Zone 3 (Note 6)	Note 8	NA	$38.25	$33.83	NA	$63.30	NA	NA	NA
All available features, per month	UEPVF	$2.64	$3.40	$0.00	$3.39	$3.08	$3.21	$3.04	$3.04
Nonrecurring Charges									
NRC - 2- wire voice grade unbundled port/loop combination - 1st, with chang		NA	$41.50	$41.50	NA	$41.50	NA	$41.50	NA
NRC - 2- wire voice grade unbundled port/loop combination - Add'l, with chang		NA	$41.50	$41.50	NA	$41.50	NA	$41.50	NA
NRC - 2- wire voice grade unbundled port/loop combination - 1st, no chang		NA	$41.50	$41.50	NA	$41.50	NA	$41.50	NA
NRC - 2- wire voice grade unbundled port/loop combination - Add'l, no chang		NA	$41.50	$41.50	NA	$41.50	NA	$41.50	NA
NRC - 2-Wire Voice Grade Loop/Line Port Combination - Subsequer		NA	$10.00	$10.00	$10.00	$10.00	NA	$10.00	NA
NRC - 2-Wire Voice Grade Loop/Line Port Combination - OSS LSR Charge, Electronic per LSR received from the CLEC by one of the OSS interactive interfaces (Note 7)	SOMEC	NA	$2.75	$3.50	NA	$3.50	NA	$3.50	NA
NRC - 2-Wire Voice Grade Loop/Line Port Combination - Incremental Cost - Manua Svc.Order vs. Electronic - 1st	SOMAN	NA	$21.56	$33.67	NA	$31.92	NA	$40.18	NA
NRC - 2-Wire Voice Grade Loop/Line Port Combination - Incremental Cost - Manua Svc.Order vs. Electronic - Add'l	SOMAN	NA	$21.56	$7.88	NA	$7.32	NA	$9.45	NA
NRC- 2 Wire Voice Grade Loop/Line Port Combination - Subsequent Database Update Electronic		NA	TBD	TBD	NA	$2.11	NA	$1.42	NA
NRC- 2 Wire Voice Grade Loop/Line Port Combination - Subsequent Database Update Manual Service Order		NA	TBD	TBD	NA	$5.12	NA	$10.27	NA
NRC - Electronic Service Order Disconnec		NA	$0.42	NA	NA	NA	NA	NA	NA
NRC - Incremental Manual Service Order Disconnect		NA	$3.84	$20.00	NA	$20.00	NA	$20.00	NA
COST BASED RATES (Notes 2 & 3)									
Currently Combined									
2-Wire Voice Grade Loop with 2-Wire Line Port									
2-Wire Voice Grade Line Port (Res.), per month									
2- wire voice unbundled port - residence	UEPRL	$2.20	$1.35	$1.79	$2.61	$2.55	$2.12	$2.28	$3.69
2-wire voice unbundled port with caller ID - residenc	UEPRC	$2.20	$1.35	$1.79	$2.61	$2.55	$2.12	$2.28	$3.69
2-wire voice unbundled port outgoing only - residenc	UEPRO	$2.20	$1.35	$1.79	$2.61	$2.55	$2.12	$2.28	$3.69
2-wire voice grade unbundled Alabama extended local dialing parity port with caller ID	UEPAR	$2.20	NA	NA	NA	NA	NA	NA	NA
2-wire voice grade unbundled Kentucky extended local dialing parity port with caller ID	UEPRM	NA	NA	NA	$2.61	NA	NA	NA	NA
2-wire voice grade unbundled Louisiana extended local dialing parity port with caller ID	UEPAS	NA	NA	NA	NA	$2.55	NA	NA	NA
2-wire voice grade unbundled Mississippi extended local dialing parity port with calle ID	UEPAT	NA	NA	NA	NA	NA	$2.12	NA	NA
2-wire voice grade unbundled South Carolina extended local dialing parity port witl caller ID	UEPAU	NA	NA	NA	NA	NA	NA	NA	$3.69
2-wire voice grade unbundled Tennessee extended local dialing parity port with calle ID	UEPAQ	NA	NA	NA	NA	NA	NA	NA	NA
2-wire voice unbundled Florida area calling with caller ID - residenc	UEPAF	NA	$1.35	NA	NA	NA	NA	NA	NA
2-wire voice unbundled Louisiana Area Plus with caller ID - residence (RUl	UEPAG	NA	NA	NA	NA	$2.55	NA	NA	NA
2-wire voice unbundled Louisiana Area Plus with caller ID - residence (AC7	UEPAH	NA	NA	NA	NA	$2.55	NA	NA	NA
2-wire voice unbundled South Carolina Area Calling port with Caller ID - residenc (LW8)	UEPAJ	NA	NA	NA	NA	NA	NA	NA	$3.69
2-wire voice unbundled Tennessee Area Calling port with Caller ID - residence (F2R)	UEPAK	NA	NA	NA	NA	NA	NA	NA	NA

BELLSOUTH/ACCESS INTEGRATED RATES
NETWORK ELEMENTS
AND OTHER SERVICES
LOOP/PORT COMBINATIONS

DESCRIPTION	USOC	AL	FL	GA	KY	LA	MS	NC	SC
2-wire voice unbundled Tennessee Area Calling port with Caller ID - residence (TACER)	UEPAL	NA	NA	NA	NA	NA	NA	NA	NA
2-wire voice unbundled Tennessee Area Calling port with Caller ID - residence (TACSR)	UEPAM	NA	NA	NA	NA	NA	NA	NA	NA
2-wire voice unbundled Tennessee Area Calling port with Caller ID - residence (1MF2X)	UEPAN	NA	NA	NA	NA	NA	NA	NA	NA
2-wire voice unbundled Tennessee Area Calling port with Caller ID - residence (2MR)	UEPAO	NA	NA	NA	NA	NA	NA	NA	NA
2-wire voice unbundled res, low usage line port with Caller ID (LUN	UEPAP	$2.20	$1.35	$1.79	$2.61	$2.55	$2.12	$2.28	$3.69
2-Wire Voice Grade Line Port (Bus.), per month									
2-wire voice unbundled port without Caller ID	UEPBL	$2.20	$1.35	$1.79	$2.61	$2.55	$2.12	$2.28	$3.69
2-wire voice unbundled port with unbundled port with Caller+E484 II	UEPBC	$2.20	$1.35	$1.79	$2.61	$2.55	$2.12	$2.28	$3.69
2-wire voice unbundled outgoing only port	UEPBO	$2.20	$1.35	$1.79	$2.61	$2.55	$2.12	$2.28	$3.69
2-wire voice grade unbundled Alabama extended local dialing parity port with caller ID	UEPAW	$2.20	NA	NA	NA	NA	NA	NA	NA
2-wire voice grade unbundled Kentucky extended local dialing parity port with caller ID	UEPBM	NA	NA	NA	$2.61	NA	NA	NA	NA
2-wire voice grade unbundled Louisiana extended local dialing parity port with caller ID	UEPAX	NA	NA	NA	NA	$2.55	NA	NA	NA
2-wire voice grade unbundled Mississippi extended local dialing parity port with calle ID	UEPAY	NA	NA	NA	NA	NA	$2.12	NA	NA
2-wire voice grade unbundled South Carolina extended local dialing parity port witl caller ID	UEPAZ	NA	NA	NA	NA	NA	NA	NA	$3.69
2-wire voice grade unbundled Tennessee extended local dialing parity port with calle ID	UEPAV	NA	NA	NA	NA	NA	NA	NA	NA
2-wire voice unbundled incoming only port with Caller ID	UEPB1	$2.20	$1.35	$1.79	$2.61	$2.55	$2.12	$2.28	$3.69
2-wire voice unbundled LA Bus Area Calling Port with Caller ID (BUC	UEPAA	NA	NA	NA	NA	$2.55	NA	NA	NA
2-wire voice unbundled SC Bus Area Calling Port with Caller ID (LME	UEPAB	NA	NA	NA	NA	NA	NA	NA	$3.69
2-wire voice unbundled TN Bus 2-Way Area Calling Port Economy Option (TACC1)	UEPAC	NA	NA	NA	NA	NA	NA	NA	NA
2-wire voice unbundled TN Bus 2-Way Area Calling Port Standard Option (TACC2)	UEPAD	NA	NA	NA	NA	NA	NA	NA	NA
2-wire voice unbundled TN Bus 2-WAY Collierville and Memphis Local Calling Por (B2F)	UEPAE	NA	NA	NA	NA	NA	NA	NA	NA
2-Wire Voice Grade Loop (SL1)									
RC - 2- Wire Voice Grade Loop - Statewide	UEPLX	NA	NA	NA	NA	NA	NA	$14.18	NA
RC - 2- Wire Voice Grade Loop - Zone 1	UEPLX	$14.35	$14.90	$10.80	$14.79	$14.05	$14.59	NA	$17.02
RC - 2- Wire Voice Grade Loop - Zone 2	UEPLX	$23.31	$18.51	$12.47	$27.68	$24.14	$19.33	NA	$25.66
RC - 2- Wire Voice Grade Loop - Zone 3	UEPLX	$42.24	$24.25	$19.83	$47.78	$49.30	$27.63	NA	$33.99
RC - 2- Wire Voice Grade Loop - Zone 4	UEPLX	NA	NA	NA	NA	NA	$36.47	NA	NA
Combination Rates									
RC - 2-Wire Voice Grade Loop with 2-Wire Line Port, Statewide	Note 8	NA	NA	NA	NA	NA	NA	$16.46	NA
RC - 2-Wire Voice Grade Loop with 2-Wire Line Port, Zone 1 (Note 6)	Note 8	$16.55	$16.25	$12.59	$17.40	$16.60	$16.71	NA	$20.71
RC - 2-Wire Voice Grade Loop with 2-Wire Line Port, Zone 2 (Note 6)	Note 8	$25.51	$19.86	$14.26	$30.29	$26.69	$21.45	NA	$29.35
RC - 2-Wire Voice Grade Loop with 2-Wire Line Port, Zone 3 (Note 6)	Note 8	$44.44	$25.60	$21.62	$50.39	$51.85	$29.75	NA	$37.68
RC - 2-Wire Voice Grade Loop with 2-Wire Line Port, Zone 4 (Note 6)	Note 8	NA	NA	NA	NA	NA	$38.59	NA	NA
All available features, per month	UEPVF	$2.64	$3.40	$0.00	$3.39	$3.08	$3.21	$3.04	$3.04
Nonrecurring Charges									
NRC - 2-Wire Voice Grade Loop/Line Port Combination - 1st, Switch as i	USAC2	$2.80	$0.1964	$2.01	$10.00	$3.80	$5.20	$2.77	$1.59
NRC - 2-Wire Voice Grade Loop/Line Port Combination - Add'l, Switch as i	USAC2	$0.41	$0.1964	$0.3108	$10.00	$0.29	$0.41	$0.40	$0.40
NRC - 2-Wire Voice Grade Loop/Line Port Combination - 1st, Switch with chang	USACC	$2.80	$0.1964	$2.01	$10.00	$3.80	$5.20	$2.77	$1.59
NRC - 2-Wire Voice Grade Loop/Line Port Combination - Add'l, Switch with change	USACC	$0.41	$0.1964	$0.3108	$10.00	$0.29	$0.41	$0.40	$0.40
NRC - 2-Wire Voice Grade Loop/Line Port Combination - Subsequer	USAS2	$10.00	$10.00	$10.00	$10.00	$10.00	$10.00	$10.00	$10.00
NRC - 2-Wire Voice Grade Loop/Line Port Combination - OSS LSR Charge, Electronic per LSR received from the CLEC by one of the OSS interactive interfaces (Note 7)	SOMEC	$3.50	$2.75	$3.50	$3.50	$3.50	$3.50	$3.50	$3.50

Version 3Q00:02/07/01

BELLSOUTH/ACCESS INTEGRATED RATES
NETWORK ELEMENTS
AND OTHER SERVICES
LOOP/PORT COMBINATIONS

DESCRIPTION	USOC	AL	FL	GA	KY	LA	MS	NC	SC
NRC - 2-Wire Voice Grade Loop/Line Port Combination - Incremental Cost - Manua Svc.Order vs. Electronic - 1st	SOMAN	$40.71	$21.56	$33.67	$19.99	$31.92	$43.52	$40.18	$43.19
NRC - 2-Wire Voice Grade Loop/Line Port Combination - Incremental Cost - Manua Svc.Order vs. Electronic - Add'l	SOMAN	$9.58	$21.56	$7.88	$19.99	$7.32	$9.99	$9.45	$9.91
NRC- 2 Wire Voice Grade Loop/Line Port Combination - Subsequent Database Update Electronic		$1.44	TBD	TBD	TBD	$2.11	$2.87	$1.42	$0.71
NRC- 2 Wire Voice Grade Loop/Line Port Combination - Subsequent Database Update Manual Service Order		$8.25	TBD	TBD	TBD	$5.12	$6.88	$10.27	$8.91
NRC - Electronic Service Order Disconnec		NA	$0.42	NA	NA	NA	NA	NA	NA
NRC - Incremental Manual Service Order Disconnec		$20.00	$3.84	$20.00	$20.00	$20.00	$20.00	$20.00	$20.00
NRCs for New (not Currently Combined) as ordered in Georgia									
NRC - 2-Wire Voice Grade Loop with 2-Wire Line Port - New - 1	UEPRL	NA	NA	$22.14	NA	NA	NA	NA	NA
NRC - 2-Wire Voice Grade Loop with 2-Wire Line Port - New - Adc	UEPRL	NA	NA	$15.25	NA	NA	NA	NA	NA
NRC - 2-Wire Voice Grade Loop with 2-Wire Line Port - New - 1	UEPRC	NA	NA	$22.14	NA	NA	NA	NA	NA
NRC - 2-Wire Voice Grade Loop with 2-Wire Line Port - New - Adc	UEPRC	NA	NA	$15.25	NA	NA	NA	NA	NA
NRC - 2-Wire Voice Grade Loop with 2-Wire Line Port - New - 1	UEPRO	NA	NA	$22.14	NA	NA	NA	NA	NA
NRC - 2-Wire Voice Grade Loop with 2-Wire Line Port - New - Adc	UEPRO	NA	NA	$15.25	NA	NA	NA	NA	NA
NRC - 2-Wire Voice Grade Loop with 2-Wire Line Port - New - 1	UEPAP	NA	NA	$22.14	NA	NA	NA	NA	NA
NRC - 2-Wire Voice Grade Loop with 2-Wire Line Port - New - Adc	UEPAP	NA	NA	$15.25	NA	NA	NA	NA	NA
NRC - 2-Wire Voice Grade Loop with 2-Wire Line Port - New - 1	UEPBL	NA	NA	$22.14	NA	NA	NA	NA	NA
NRC - 2-Wire Voice Grade Loop with 2-Wire Line Port - New - Add'l	UEPBL	NA	NA	$15.25	NA	NA	NA	NA	NA
NRC - 2-Wire Voice Grade Loop with 2-Wire Line Port - New - 1	UEPBC	NA	NA	$22.14	NA	NA	NA	NA	NA
NRC - 2-Wire Voice Grade Loop with 2-Wire Line Port - New - Adc	UEPBC	NA	NA	$15.25	NA	NA	NA	NA	NA
NRC - 2-Wire Voice Grade Loop with 2-Wire Line Port - New - 1	UEPBO	NA	NA	$22.14	NA	NA	NA	NA	NA
NRC - 2-Wire Voice Grade Loop with 2-Wire Line Port - New - Adc	UEPBO	NA	NA	$15.25	NA	NA	NA	NA	NA
NRC - 2-Wire Voice Grade Loop with 2-Wire Line Port - New - 1	UEPB1	NA	NA	$22.14	NA	NA	NA	NA	NA
NRC - 2-Wire Voice Grade Loop with 2-Wire Line Port - New - Adc	UEPB1	NA	NA	$15.25	NA	NA	NA	NA	NA
NRC - 2-Wire Voice Grade Loop/Line Port Combination - Subsequer	USAS2	NA	NA	$10.00	NA	NA	NA	NA	NA
NRC - 2-Wire Voice Grade Loop with 2-Wire Line Port - New - Disconnect - 1		NA	NA	$8.45	NA	NA	NA	NA	NA
NRC - 2-Wire Voice Grade Loop with 2-Wire Line Port - New - Disconnect - Adc		NA	NA	$3.91	NA	NA	NA	NA	NA
NRC - 2-Wire Voice Grade Loop/Line Port Combination - OSS LSR Charge, Electronic per LSR received from the CLEC by one of the OSS interactive interfaces (Note 7)	SOMEC	NA	NA	$3.50	NA	NA	NA	NA	NA
NRC - 2-Wire Voice Grade Loop with 2-Wire Line Port - Incremental Cost Manual vs Electronic - New - 1st		NA	NA	$37.06	NA	NA	NA	NA	NA
NRC - 2-Wire Voice Grade Loop with 2-Wire Line Port - Incremental Cost Manual vs Electronic - New - Add'l		NA	NA	$8.19	NA	NA	NA	NA	NA
NRC- 2 Wire Voice Grade Loop/Line Port Combination - Subsequent Database Update Electronic		NA	NA	TBD	NA	NA	NA	NA	NA
NRC- 2 Wire Voice Grade Loop/Line Port Combination - Subsequent Database Update Manual Service Order		NA	NA	TBD	NA	NA	NA	NA	NA
NRC - 2-Wire Voice Grade Loop with 2-Wire Line Port - Incremental Cost Manual vs Electronic - New - Disconnect		NA	NA	$11.17	NA	NA	NA	NA	NA
2- Wire Voice Grade Loop - Bus Only with 2 -Wire DID Trunk Port									
2 - Wire Line Port - DID Trunk Port, per month	UEPD1	TBD	$9.36	$11.35	$10.84	$13.12	$14.63	$12.12	TBD
2-Wire Voice Grade Loop (SL2)									
RC - 2- Wire Voice Grade Loop - Statewide	UECD1	NA	NA	NA	NA	NA	NA	$11.76	NA
RC - 2- Wire Voice Grade Loop - Zone 1	UECD1	$17.95	$18.48	$16.84	$17.78	$17.65	$18.35	NA	$21.57
RC - 2- Wire Voice Grade Loop - Zone 2	UECD1	$29.16	$22.43	$19.45	$23.96	$30.32	$24.33	NA	$32.53
RC - 2- Wire Voice Grade Loop - Zone 3	UECD1	$52.84	$27.87	$30.92	$34.96	$61.93	$34.77	NA	$43.08
RC - 2- Wire Voice Grade Loop - Zone 4	UECD1	NA	NA	NA	NA	NA	$45.88	NA	NA

BELLSOUTH/ACCESS INTEGRATED RATES
NETWORK ELEMENTS
AND OTHER SERVICES
LOOP/PORT COMBINATIONS

DESCRIPTION	USOC	AL	FL	GA	KY	LA	MS	NC	SC
Combination Rates									
RC - 2-Wire Voice Grade Loop with 2-Wire DID Port, Statewide	Note 8	NA	NA	NA	NA	NA	NA	$23.79	NA
RC - 2-Wire Voice Grade Loop with 2-Wire DID Port, Zone 1 (Note 6)	Note 8	28.72	$27.84	$28.19	28.72	$30.77	28.72	NA	28.72
RC - 2-Wire Voice Grade Loop with 2-Wire DID Port, Zone 2 (Note 6)	Note 8	34.91	$31.79	$30.80	34.91	$43.44	34.91	NA	34.91
RC - 2-Wire Voice Grade Loop with 2-Wire DID Port, Zone 3 (Note 6)	Note 8	45.9	$37.23	$42.27	45.9	$75.05	45.9	NA	45.9
RC - 2-Wire Voice Grade Loop with 2-Wire DID Port, Zone4 (Note 6)	Note 8	NA	NA	NA	NA	NA	TBD	NA	NA
NRC- 2- Wire Voice Grade Loop with 2- Wire DID Port - Conversion - Switch As Is - 1 port	USAC1	$14.62	$14.62	$166.08	TBD	$14.60	$14.60	$13.26	$14.62
NRC- 2- Wire Voice Grade Loop with 2- Wire DID Port - Conversion - Switch As Is Each Addl Port	USAC1	$3.73	$3.73	$140.01	TBD	$3.72	$3.72	$8.39	$3.73
NRC- 2- Wire Voice Grade Loop with 2- Wire DID Port - Conversion with changes - 1 port	USA1C	$14.62	$14.62	$166.08	TBD	$14.60	$14.60	$13.26	$14.62
NRC- 2- Wire Voice Grade Loop with 2- Wire DID Port - Conversion with changes Each Addl port	USA1C	$3.73	$3.73	$140.01	TBD	$3.72	$3.72	$8.39	$3.73
NRC - 2-Wire DID Subsequent Activity - Per Svc Order - Add Trunks, Per Trun	USAS1	$53.57	$53.57	NA	NA	$53.50	$53.50	NA	$53.57
NRC - 2-Wire Voice Grade Loop/Line Port Combination - OSS LSR Charge, Electronic per LSR received from the CLEC by one of the OSS interactive interfaces (Note 7)	SOMEC	$3.50	$2.75	$3.50	$3.50	$3.50	$3.50	$3.50	$3.50
NRC- 2- Wire Voice Grade Loop with 2- Wire DID Port - Incremental Cost- Manua Service Order - 1st	SOMAN	$19.99	$21.56	$37.88	$19.99	$19.99	$19.99	$53.89	$19.99
NRC- 2- Wire Voice Grade Loop with 2- Wire DID Port - Incremental Cost- Manua Service Order - Addl	SOMAN	$19.99	$21.56	$16.84	$19.99	$19.99	$19.99	$11.34	$19.99
NRC - Electronic Service Order Disconnec		$0.42	$0.42	$0.42	$0.42	$0.42	$0.42	$0.42	$0.42
NRC - Incremental Manual Service Order Disconnec		$20.00	$3.84	$20.00	$20.00	$20.00	$20.00	$20.00	$20.00
Telephone Number/Trunk Group Establishment									
DID Trunk Termination (one required per port	NDT	$0.00	$0.00	$0.00	$0.00	$0.00	$0.00	$0.00	$0.00
DID Numbers, Establish Trunk Group and Provide First Group of 20 DID Numbers (FL, GA, NC, & SC only)	NDZ	$0.00	$0.00	$0.00	$0.00	$0.00	$0.00	$0.00	$0.00
DID Numbers, Establish Trunk Group and Provide First Group of 20 DID Numbers (AL, KY, LA, MS, & TN). In addition, Provides Additional DID Numbers for each Group of 2 DID Numbers (Valid in All States)	ND4	$0.00	$0.00	$0.00	$0.00	$0.00	$0.00	$0.00	$0.00
DID Numbers, non-consective	ND5	$0.00	$0.00	$0.00	$0.00	$0.00	$0.00	$0.00	$0.00
2-Wire ISDN Digital Grade Loop with 2-wire ISDN Digital Port									
2-wire ISDN Digital Port per month	UEPPB	$16.42	$8.51	$13.47	$12.99	$11.42	$51.91	$24.37	$33.74
2-Wire ISDN Digital Grade Loop									
RC - 2-Wire ISDN Digital Grade Loop - Statewid	USL2X	NA	NA	NA	NA	NA	NA	$19.08	NA
RC - 2-Wire ISDN Digital Grade Loop - Zone 1	USL2X	$23.23	$22.48	$21.89	$22.41	$28.87	$21.86	NA	$26.68
RC - 2-Wire ISDN Digital Grade Loop - Zone 2	USL2X	$37.74	$27.90	$25.27	$31.10	$37.63	$28.97	NA	$40.24
RC - 2-Wire ISDN Digital Grade Loop - Zone 3	USL2X	$68.38	$30.78	$40.17	$42.36	$48.42	$41.40	NA	$53.29
RC - 2-Wire ISDN Digital Grade Loop - Zone 4	USL2X	NA	NA	NA	NA	NA	$54.64	NA	NA
Combination Rates									
RC - 2-Wire ISDN Digital Grade Loop with 2-wire ISDN Digital Port - Statewide	Note 8	NA	NA	NA	NA	NA	NA	$43.45	NA
RC - 2-Wire ISDN Digital Grade Loop with 2-wire ISDN Digital Port - Zone	Note 8	$39.65	$30.99	$35.36	$34.40	$34.84	$73.77	NA	$60.42
RC - 2-Wire ISDN Digital Grade Loop with 2-wire ISDN Digital Port - Zone	Note 8	$54.16	$36.41	$38.74	$44.10	$43.20	$80.78	NA	$73.98
RC - 2-Wire ISDN Digital Grade Loop with 2-wire ISDN Digital Port - Zone	Note 8	$84.80	$39.30	$53.64	$55.35	$59.69	$93.31	NA	$87.03
RC - 2-Wire ISDN Digital Grade Loop with 2-wire ISDN Digital Port - Zone	Note 8	NA	NA	NA	NA	NA	$106.55	NA	NA
All available features, per month	UEPVF	$2.64	$3.40	$0.00	$3.39	$3.08	$3.21	$3.04	$3.04
NRC - 2-Wire ISDN Digital Grade Loop/2-wire ISDN Digital Port - 1st conversion	USACB	$79.12	$86.79	$239.95	$79.12	$79.01	$79.12	$174.35	$79.12
NRC - 2-Wire ISDN Digital Grade Loop/2-wire ISDN Digital Port - Add'l conversion	USACB	$54.04	$54.04	$156.92	$54.04	$53.97	$54.04	$174.35	$54.04
NRC - 2-Wire ISDN Digital Grade Loop/2-wire ISDN Digital Port - Non Feature Subsequent Activity	USASB	$53.50	$53.50	$53.50	$53.50	$53.50	$53.50	$53.50	$53.50

BELLSOUTH/ACCESS INTEGRATED RATES
NETWORK ELEMENTS
AND OTHER SERVICES
LOOP/PORT COMBINATIONS

DESCRIPTION	USOC	AL	FL	GA	KY	LA	MS	NC	SC
NRC - 2-Wire Voice Grade Loop/Line Port Combination - OSS LSR Charge, Electronic per LSR received from the CLEC by one of the OSS interactive interfaces (Note 7)	SOMEC	$3.50	$2.75	$3.50	$3.50	$3.50	$3.50	$3.50	$3.50
NRC - 2-Wire ISDN Digital Grade Loop/2-wire ISDN Digital Port - Incremental Cost Manual Service Order - 1st	SOMAN	$19.99	$21.56	$19.99	$19.99	$19.99	$19.99	$19.99	$19.99
NRC - 2-Wire ISDN Digital Grade Loop/2-wire ISDN Digital Port - Incremental Cost Manual Service Order - Addl	SOMAN	$19.99	$21.56	$19.99	$19.99	$19.99	$19.99	$19.99	$19.99
NRC - Electronic Service Order Disconnec		$0.42	$0.42	$0.42	$0.42	$0.42	$0.42	$0.42	$0.42
NRC - Incremental Manual Service Order Disconnec		$20.00	$3.84	$20.00	$20.00	$20.00	$20.00	$20.00	$20.00
4 - Wire DS1 Digital Loop with 4 - Wire ISDN DS1 Digital Trunk Port									
4 - Wire ISDN DS1 Digital Trunk Por	UEPPP	$186.02	$95.39	$163.16	$113.21	$107.55	$213.21	$179.01	$214.79
4 - Wire DS1 Digital Loop									
RC - 4- Wire DS1 Digital Loop- Statewide	USL4P	NA	NA	NA	NA	NA	NA	$62.71	NA
RC - 4- Wire DS1 Digital Loop- Zone 1	USL4P	$51.74	$92.48	$55.53	$106.04	$100.70	$50.99	NA	$59.61
RC - 4- Wire DS1 Digital Loop- Zone 2	USL4P	$84.05	$119.68	$3.21	$135.15	$129.12	$67.58	NA	$89.90
RC - 4- Wire DS1 Digital Loop- Zone 3	USL4P	$152.29	$194.70	$101.93	$186.26	$344.16	$96.58	NA	$119.06
RC - 4-Wire DS1 Digital Loop - Zone 4	USL4P	NA	NA	NA	NA	NA	$127.47	NA	NA
Combination Rates									
RC - 4-Wire DS1 Digital Loop with 4-wire ISDN DS1 Digital Port - Statewid	Note 8	NA	NA	NA	NA	NA	NA	$241.72	NA
RC - 4-Wire DS1 Digital Loop with 4-wire ISDN DS1 Digital Port - Zone	Note 8	$237.76	$187.87	$218.69	$219.25	$208.25	$264.20	NA	$274.40
RC - 4-Wire DS1 Digital Loop with 4-wire ISDN DS1 Digital Port - Zone	Note 8	$270.07	$215.07	$227.29	$248.36	$236.67	$280.79	NA	$304.69
RC - 4-Wire DS1 Digital Loop with 4-wire ISDN DS1 Digital Port - Zone	Note 8	$338.31	$290.08	$265.09	$299.47	$451.57	$309.79	NA	$333.85
RC - 4-Wire DS1 Digital Loop with 4-wire ISDN DS1 Digital Port - Zone	Note 8	NA	NA	NA	NA	NA	$340.68	NA	NA
Local Number Portability									
Local Number Portability (1 per port	LNPCN	$1.75	$1.75	$1.75	$1.75	$1.75	$1.75	$1.75	$1.75
Interface (Provsioning Only)									
Voice/Data	PR71V	$0.00	$0.00	$0.00	$0.00	$0.00	$0.00	$0.00	$0.00
Digital Data	PR71D	$0.00	$0.00	$0.00	$0.00	$0.00	$0.00	$0.00	$0.00
Inward Data	PR71E	$0.00	$0.00	$0.00	$0.00	$0.00	$0.00	$0.00	$0.00
Non-Recurring Charges									
NRC - 4-Wire DS1 Digital Loop with 4-wire ISDN DS1 Digital Port Combination - 1s conversion	USACP	$240.30	$247.97	$269.96	$240.30	$239.95	$240.30	$481.51	$240.30
NRC - 4-Wire DS1 Digital Loop with 4-wire ISDN DS1 Digital Port Combination - Add conversion	USACP	$157.17	$157.17	$269.96	$157.17	$156.94	$157.17	$481.51	$157.17
NRC -4 - Wire DS1 Digital Loop with 4 - Wire ISDN DS1 Digital Trunk Port Subsequent Channel Activation - Per Channel	USASP	$29.06	$29.06	$28.71	$29.06	$29.01	$29.06	$36.92	$29.06
NRC - 4-Wire DS1 Digital Loop with 4-wire ISDN DS1 Digital Port Combination Subsequent Inward/2-way Telephone Numbers	PR7TG	$0.98	$0.9804	$0.9686	$0.98	$0.98	$0.98	$1.17	$0.98
NRC - 4-Wire DS1 Digital Loop with 4-wire ISDN DS1 Digital Port Combination Subsequent Outward Telephone numbers	PR7TP	$23.02	$23.02	$22.75	$23.02	$22.99	$23.02	$28.17	$23.02
NRC - 4-Wire DS1 Digital Loop with 4-wire ISDN DS1 Digital Port Combination Subsequent Inward Telephone Numbers	PR7ZT	$46.05	$46.05	$45.49	$46.05	$45.98	$46.05	$56.33	$46.05
NRC - 4-Wire DS1 Digital Loop with 4-wire ISDN DS1 Digital Port Combination Subsequent Service Order Per Order	USASP	$147.47	$147.47	$147.47	$147.47	$147.47	$147.47	$255.25	$147.47
NRC - 2-Wire Voice Grade Loop/Line Port Combination - OSS LSR Charge, Electronic per LSR received from the CLEC by one of the OSS interactive interfaces (Note 7)	SOMEC	$3.50	$2.75	$3.50	$3.50	$3.50	$3.50	$3.50	$3.50
NRC - 4-Wire DS1 Digital Loop with 4-wire ISDN Digital Port - Incremental Cost Manual Service Order - 1st	SOMAN	$19.99	$21.56	$19.99	$19.99	$19.99	$19.99	$19.99	$19.99
NRC - 4-Wire ISDN Digital Loop with 4-wire ISDN Digital Port - Incremental Cost Manual Service Order - Addl	SOMAN	$19.99	$21.56	$19.99	$19.99	$19.99	$19.99	$19.99	$19.99
NRC - Electronic Service Order Disconnec		$0.42	$0.42	$0.42	$0.42	$0.42	$0.42	$0.42	$0.42
NRC - Incremental Manual Service Order Disconnec		$20.00	$3.84	$20.00	$20.00	$20.00	$20.00	$20.00	$20.00
4 - Wire DS1 Digital Loop with 4 - Wire DDITS Trunk Port									
4 - Wire DDITS Digital Trunk Port (Formerly DID Trunk Por	UDD1T	$130.23	$63.31	$120.80	$83.28	$149.27	$146.46	$123.65	TBD

Version 3Q00:02/07/01

BELLSOUTH/ACCESS INTEGRATED RATES
NETWORK ELEMENTS
AND OTHER SERVICES
LOOP/PORT COMBINATIONS

DESCRIPTION	USOC	AL	FL	GA	KY	LA	MS	NC	SC
4 - Wire DS1 Digital Loop	USLDC								
4 - Wire DS1 Digital Loop - Statewide	USLDC	NA	NA		NA	NA	NA	$62.71	NA
4 - Wire DS1 Digital Loop - Zone 1	USLDC	$51.74	$64.69	$55.53	$106.04	$56.32	$50.99	NA	$59.61
4 - Wire DS1 Digital Loop - Zone 2	USLDC	$84.05	$94.71	$64.13	$135.15	$96.73	$67.58	NA	$89.90
4 - Wire DS1 Digital Loop - Zone 3	USLDC	$152.29	$208.93	$101.93	$186.26	$197.57	$96.58	NA	$119.06
4 - Wire DS1 Digital Loop - Zone 4	USLDC	NA	NA	NA	NA	NA	$127.47	NA	NA
Combination Rates									
4 - Wire DS1 Digital Loop with 4 - Wire DDITS Trunk Port - Statewid	Note 8	NA	NA	NA	NA	NA	NA	$186.36	NA
4 - Wire DS1 Digital Loop with 4 - Wire DDITS Trunk Port - Zone	Note 8	$181.97	$128.00	$176.33	$189.32	$205.59	$197.45	NA	TBD
4 - Wire DS1 Digital Loop with 4 - Wire DDITS Trunk Port - Zone	Note 8	$214.28	$158.02	$184.93	$218.43	$246.00	$214.04	NA	TBD
4 - Wire DS1 Digital Loop with 4 - Wire DDITS Trunk Port - Zone	Note 8	$282.52	$272.24	$222.73	$269.54	$346.84	$243.04	NA	TBD
4 - Wire DS1 Digital Loop with 4 - Wire DDITS Trunk Port - Zone	Note 8	NA	NA	NA	NA	NA	$273.93	NA	NA
Local number Portability per DSO Activated	LNPCP	$3.15	$3.15	$3.15	$3.15	$3.15	$3.15	$3.15	$3.15
Central Office Terminating Poin	CTG	$0.00	$0.00	$0.00	$0.00	$0.00	$0.00	$0.00	$0.00
Telephone Number / Trunk Group establishmen									
Telephone Number for 2-Way Trunk Grou	UDTGX	$0.00	$0.00	$0.00	$0.00	$0.00	$0.00	$0.00	$0.00
Telephone Number for 1-Way Outward Trunk Group	UDTGY	$0.00	$0.00	$0.00	$0.00	$0.00	$0.00	$0.00	$0.00
Telephone Number for 1-Way Inward Trunk Group Without DID	UDTGZ	$0.00	$0.00	$0.00	$0.00	$0.00	$0.00	$0.00	$0.00
DID Numbers, Establish Trunk Group and Provide First Group of 20 DID Numbers (FL, GA, NC, & SC only)	NDZ	$0.00	$0.00	$0.00	$0.00	$0.00	$0.00	$0.00	$0.00
DID Numbers, Establish Trunk Group and Provide First Group of 20 DID Numbers (AL, KY, LA, MS, & TN). In addition, Provides Additional DID Numbers for each Group of 2 DID Numbers (Valid in All States)	ND4	$0.00	$0.00	$0.00	$0.00	$0.00	$0.00	$0.00	$0.00
DID Numbers, Non- consecutive DID Numbers , Per Numbe	ND5	$0.00	$0.00	$0.00	$0.00	$0.00	$0.00	$0.00	$0.00
Interoffice Channel Mileage - (Dedicated DS1) FX/FCO for 4 - Wire DS1 Digital Loop with 4 - Wire DDITS Trunk Port									
Fixed cost 0-8 miles (Facilities Termination	1LNO1	$79.69	$92.62	$63.39	$55.05	$93.40	$74.40	$71.29	$94.98
Additional costs per mile 0-8 miles	1LNOA	$0.6920	$0.2000	$0.3068	$0.4500	$0.7831	$0.6598	$0.0783	$0.7598
Fixed cost 9-25 miles (Facilities Termination	1LN02	$0.00	$0.00	$0.00	$0.00	$0.00	$0.00	$0.00	$0.00
additional costs per mile 9-25 miles	1LNOB	$0.6920	$0.2000	$0.3068	$0.4500	$0.7831	$0.6598	$0.0783	$0.7598
Fixed cost 25 + miles (Facilities Termination	1LNO3	$0.00	$0.00	$0.00	$0.00	$0.00	$0.00	$0.00	$0.00
Additional costs 25 + miles	1LNOC	$0.6920	$0.2000	$0.3068	$0.4500	$0.7831	$0.6598	$0.0783	$0.7598
Enhanced Performance Charges									
Enhanced Performance Charges - as negotiated in contrac	UDTPC	TBN	TBN	TBN	TBN	TBN	TBN	TBN	TBN
Non-recurring Charges									
NRC - 4-Wire DS1 Digital Loop with 4-Wire DDITS Trunk Port Combination - OSS LSR Charge, Electronic, per LSR received from the CLEC by one of the OSS interactive interfaces (Note 7)	SOMEC	$3.50	$2.75	$3.50	$3.50	$3.50	$3.50	$3.50	$3.50
NRC- 4-Wire DS1 Digital Loop with 4-Wire DDITS Trunk Port - Incremental Cost Manual Service Order - 1st	SOMAN	$19.99	$21.56	$37.88	$19.99	$19.99	$19.99	$19.99	$19.99
NRC- 4-Wire DS1 Digital Loop with 4-Wire DDITS Trunk Port - Incremental Cost Manual Service Order - Add'l	SOMAN	$19.99	$21.56	$16.84	$19.99	$19.99	$19.99	$19.99	$19.99
NRC - Electronic Service Order Disconnec		TBD	$0.42	TBD	TBD	TBD	TBD	TBD	TBD
NRC - Incremental Manual Service Order Disconnec		$20.00	$3.84	$20.00	$20.00	$20.00	$20.00	$20.00	$20.00
NRC -4 - Wire DS1 Digital Loop with 4 - Wire DDITS Trunk Port -Conversion - Switc as is - 1st	USAC4	TBD	$268.82	$269.96	$261.15	$266.76	TBD	$490.38	TBD
NRC -4 - Wire DS1 Digital Loop with 4 - Wire DDITS Trunk Port - Conversion - Switc as is - Additional	USAC4	TBD	$134.07	$269.96	$134.08	$123.16	TBD	$490.38	TBD
NRC -4 - Wire DS1 Digital Loop with 4 - Wire DDITS Trunk Port - Conversion with DS changes - 1st	USAWA	TBD	$268.82	$269.96	$261.15	$266.76	TBD	$490.38	TBD
NRC -4 - Wire DS1 Digital Loop with 4 - Wire DDITS Trunk Port - Conversion with DS Changes - Additional	USAWA	TBD	$134.07	$269.96	$134.08	$123.16	TBD	$490.38	TBD
NRC -4 - Wire DS1 Digital Loop with 4 - Wire DDITS Trunk Port - Conversion wit Change - Trunks - 1st	USAWB	TBD	$268.82	$269.96	$261.15	$266.76	TBD	$490.38	TBD

BELLSOUTH/ACCESS INTEGRATED RATES
NETWORK ELEMENTS
AND OTHER SERVICES
LOOP/PORT COMBINATIONS

DESCRIPTION	USOC	AL	FL	GA	KY	LA	MS	NC	SC
NRC -4 - Wire DS1 Digital Loop with 4 - Wire DDITS Trunk Port - Conversion wit Change - Trunks - Additional	USAWB	TBD	$134.07	$269.96	$134.08	$123.16	TBD	$490.38	TBD
NRC -4 - Wire DS1 Digital Loop with 4 - Wire DDITS Digital Trunk Port - Subsequer Service Activity Per Service Order	USAS4	TBD	$54.00	$147.47	TBD	$68.57	TBD	$127.63	TBD
NRC -4 - Wire DS1 Digital Loop with 4 - Wire DDITS Trunk Port - New - 1s	UDDIT	NA	NA	$858.30	NA	NA	NA	NA	NA
NRC -4 - Wire DS1 Digital Loop with 4 - Wire DDITS Trunk Port - New - Additional	UDDIT	NA	NA	$514.02	NA	NA	NA	NA	NA
NRC -4 - Wire DS1 Digital Loop with 4 - Wire DDITS Trunk Port - New - 1st Disconnect	UDDIT	NA	NA	TBD	NA	NA	NA	NA	NA
NRC -4 - Wire DS1 Digital Loop with 4 - Wire DDITS Trunk Port - New - Additiona Disconnect	UDDIT	TBD	NA	TBD	TBD	NA	TBD	$11.98	TBD
NRC -4 - Wire DS1 Digital Loop with 4 - Wire DDITS Trunk Port - Subsequent Channe Activation - Per Channel - 2-Way Trunk	UDTTA	TBD	$28.96	$28.71	$28.96	$26.60	TBD	$146.91	TBD
NRC -4 - Wire DS1 Digital Loop with 4 - Wire DDITS Trunk Port - Subsequent Channe Activation - Per Channel - 1-Way Outward Trunk	UDTTB	TBD	$28.96	$28.71	$28.96	$26.60	TBD	$146.91	TBD
NRC -4 - Wire DS1 Digital Loop with 4 - Wire DDITS Trunk Port - Subsequent Channe Activation - Per Channel - 1-Way Inward Trunk Without DID	UDTTC	TBD	$28.96	$28.71	$28.96	$26.60	TBD	$146.91	TBD
NRC -4 - Wire DS1 Digital Loop with 4 - Wire DDITS Trunk Port - Subsequent Channe Activation - Per Channel - 1-Way Inward Trunk With DID	UDTTD	TBD	$28.96	$28.71	$28.96	$26.60	TBD	$146.91	TBD
NRC -4 - Wire DS1 Digital Loop with 4 - Wire DDITS Trunk Port - Subsequent Channe Activation - Per Channel - 2-Way DID with User Transfer	UDTTE	TBD	$28.96	$28.71	$28.96	$26.60	TBD	$146.91	TBD
NRC -4 - Wire DS1 Digital Loop with 4 - Wire DDITS Digital Trunk Port - Subsequer Signaling Changes		TBD	TBD	TBD	TBD	TBD	TBD	$29.65	TBD
NRC -4 - Wire DS1 Digital Loop with 4 - Wire DDITS Digital Trunk Port - Subsequer Telephone Numbers		TBD	TBD	TBD	TBD	TBD	TBD	$120.96	TBD
NRC - Interoffice Channel Mileage - (Dedicated DS1) FX/FCO for 4 - Wire DS1 Digital Loop with 4 - Wire DDITS Trunk PortFixed cost 0-8 miles (Facilities Termination) - 1st - New Only	1LNO1	$198.15	NA	$147.07	NA	NA	NA	NA	NA
NRC - Interoffice Channel Mileage - (Dedicated DS1) FX/FCO for 4 - Wire DS1 Digital Loop with 4 - Wire DDITS Trunk PortFixed cost 0-8 miles (Facilities Termination) - Additional - New Only	1LNO2	$148.18	NA	$111.75	NA	NA	NA	NA	NA
NRC - Interoffice Channel Mileage - (Dedicated DS1) FX/FCO for 4 - Wire DS1 Digital Loop with 4 - Wire DDITS Trunk PortFixed cost 0-8 miles (Facilities Termination) - Disconnect - 1st - New Only	1LNO3	$25.44	NA	NA	NA	NA	NA	NA	NA
NRC - Interoffice Channel Mileage - (Dedicated DS1) FX/FCO for 4 - Wire DS1 Digital Loop with 4 - Wire DDITS Trunk PortFixed cost 0-8 miles (Facilities Termination) - Disconnect Additional - New Only	1LNO4	$20.42	NA	NA	NA	NA	NA	NA	NA
BIPOLAR 8 ZERO SUSTITUTIOI									
NRC - Superframe Format - Conversion or new install 1st	CCOSF	$0.00	$0.00	$0.00	$0.00	$0.00	$0.00	$0.00	$0.00
NRC - Superframe Format - Conversion or new install Additiona	CCOSF	$0.00	$0.00	$0.00	$0.00	$0.00	$0.00	$0.00	$0.00
NRC - Extended Superframe Format - Change or Subsequent Activity - 1s	CCOSF	$0.00	$0.00	$0.00	$0.00	$0.00	$0.00	$0.00	$0.00
NRC - Extended Superframe Format - Change or Subsequent Activity - Additiona	CCOSF	$600.00	$655.00	$600.00	$730.00	$605.00	$600.00	$615.00	$605.00
NRC - Extended Superframe Format - Conversion or New Install 1s	CCOEF	$0.00	$0.00	$0.00	$0.00	$0.00	$0.00	$0.00	$0.00
NRC - Extended Superframe Format - Conversion or New Install - Additiona	CCOEF	$0.00	$0.00	$0.00	$0.00	$0.00	$0.00	$0.00	$0.00
NRC - Extended Superframe Format - Change or Subsequent Activity - 1s	CCOEF	$0.00	$0.00	$0.00	$0.00	$0.00	$0.00	$0.00	$0.00
NRC - Extended Superframe Format - Change or Subsequent Activity - Additiona	CCOEF	$600.00	$655.00	$600.00	$730.00	$605.00	$600.00	$615.00	$605.00
Alternate Mark Inversion (AMI									
NRC - Superframe Format - 1s	MCOSF	$0.00	$0.00	$0.00	$0.00	$0.00	$0.00	$0.00	$0.00
NRC - Superframe Format - Additiona	MCOSF	$0.00	$0.00	$0.00	$0.00	$0.00	$0.00	$0.00	$0.00
NRC - Extended Superframe Format - 1s	MCOPO	$0.00	$0.00	$0.00	$0.00	$0.00	$0.00	$0.00	$0.00
NRC - Extended Superframe Format - Additiona	MCOPO	$0.00	$0.00	$0.00	$0.00	$0.00	$0.00	$0.00	$0.00
2-Wire Voice Grade Loop with 2-Wire Line Port PBX									

BELLSOUTH/ACCESS INTEGRATED RATES
NETWORK ELEMENTS
AND OTHER SERVICES
LOOP/PORT COMBINATIONS

DESCRIPTION	USOC	AL	FL	GA	KY	LA	MS	NC	SC
2-Wire Analog Line Port (PBX), per month									
2 WIRE VOICE UNBUNDLED COMBINATION 2-WAY PBX TRUNK - Residence	UEPRD	$2.20	$1.35	$1.79	$2.61	$2.55	$2.12	$2.28	$3.69
LINE SIDE UNBUNDLED COMBINATION 2-WAY PBX TRUNK - BUSINESS	UEPPC	$2.20	$1.35	$1.79	$2.61	$2.55	$2.12	$2.28	$3.69
LINE SIDE UNBUNDLED OUTWARD PBX TRUNK - BUSINESS	UEPPO	$2.20	$1.35	$1.79	$2.61	$2.55	$2.12	$2.28	$3.69
LINE SIDE UNBUNDLED INCOMING PBX TRUNK - BUSINESS	UEPP1	$2.20	$1.35	$1.79	$2.61	$2.55	$2.12	$2.28	$3.69
2-WIRE VOICE UNBUNDLED 2-WAY COMBINATION PBX ALABAMA CALLING PORT	UEPA2	$2.20	NA	NA	NA	NA	NA	NA	NA
2-WIRE VOICE UNBUNDLED 2-WAY COMBINATION PBX LOUISIANA CALLING PORT	UEPL2	NA	NA	NA	NA	$2.55	NA	NA	NA
2-WIRE VOICE UNBUNDLED PBX LD TERMINAL PORTS	UEPLD	$2.20	$1.35	$1.79	$2.61	$2.55	$2.12	$2.28	$3.69
2-WIRE VOICE UNBUNDLED 2-WAY COMBINATION PBX TENNESSEE CALLING PORT	UEPT2	NA	NA	NA	NA	NA	NA	NA	NA
2-WIRE VOICE UNBUNDLED 1-WAY OUTGOING PBX TENNESSEE CALLING PORT	UEPTO	NA	NA	NA	NA	NA	NA	NA	NA
2-WIRE VOICE UNBUNDLED 2-WAY COMBINATION PBX USAGE POR	UEPXA	$2.20	$1.35	$1.79	$2.61	$2.55	$2.12	$2.28	$3.69
2-WIRE VOICE UNBUNDLED PBX TOLL TERMINAL HOTEL PORTS	UEPXB	$2.20	$1.35	$1.79	$2.61	$2.55	$2.12	$2.28	$3.69
2-WIRE VOICE UNBUNDLED PBX LD DDD TERMINALS POR	UEPXC	$2.20	$1.35	$1.79	$2.61	$2.55	$2.12	$2.28	$3.69
2-WIRE VOICE UNBUNDLED PBX LD TERMINAL SWITCHBOARD POR	UEPXD	$2.20	$1.35	$1.79	$2.61	$2.55	$2.12	$2.28	$3.69
2-WIRE VOICE UNBUNDLED PBX LD TERMINAL SWITCHBOARD IDD CAPABLE PORT	UEPXE	$2.20	$1.35	$1.79	$2.61	$2.55	$2.12	$2.28	$3.69
2-WIRE VOICE UNBUNDLED 2-WAY PBX KENTUCKY ROOM AREA CALLING PORT WITHOUT LUD	UEPXF	NA	NA	NA	$2.61	NA	NA	NA	NA
2-WIRE VOICE UNBUNDLED PBX KENTUCKY LUD AREA CALLING POR	UEPXG	NA	NA	NA	$2.61	NA	NA	NA	NA
2-WIRE VOICE UNBUNDLED PBX KENTUCKY PREMIUM CALLING POR	UEPXH	NA	NA	NA	$2.61	NA	NA	NA	NA
2-WIRE VOICE UNBUNDLED 2-WAY KENTUCKY AREA CALLING PORT WITHOUT LUD	UEPXJ	NA	NA	NA	$2.61	NA	NA	NA	NA
2-WIRE VOICE UNBUNDLED 2-WAY PBX LOUISIANA LOCAL OPTIONAL CALLING PORT	UEPXK	NA	NA	NA	NA	$2.55	NA	NA	NA
2-WIRE VOICE UNBUNDLED 2-WAY PBX HOTEL/HOSPITAL ECONOMY ADMINISTRATIVE CALLING PORT	UEPXL	$2.20	$1.35	$1.79	$2.61	$2.55	$2.12	$2.28	$3.69
2-WIRE VOICE UNBUNDLED 2-WAY PBX HOTEL/HOSPITAL ECONOMY ROOM CALLING PORT	UEPXM	$2.20	$1.35	$1.79	$2.61	$2.55	$2.12	$2.28	$3.69
2-WIRE VOICE UNBUNDLED 1-WAY OUTGOING PBX HOTEL/HOSPITAL ECONOMY ADMINIATRATIVE CALLING PORTTENNESSEE CALLING PORT	UEPXN	NA	NA	NA	NA	NA	NA	NA	NA
2-WIRE VOICE UNBUNDLED 1-WAY OUTGOING PBX HOTEL/HOSPITAL DIACOUNT ROOM CALLING PORT	UEPXO	$2.20	$1.35	$1.79	$2.61	$2.55	$2.12	$2.28	$3.69
2-WIRE VOICE UNBUNDLED 1-WAY OUTGOING PBX LOUISIANA LOCAL DISCOUNT CALLING PORT	UEPXP	NA	NA	NA	NA	$2.55	NA	NA	NA
2-WIRE VOICE UNBUNDLED 2-WAY PBX MISSISSIPPI LOCAL ECONOMY CALLING PORT	UEPXQ	NA	NA	NA	NA	NA	$2.12	NA	NA
2-WIRE VOICE UNBUNDLED 2-WAY PBX MISSISSIPPI LOCAL OPTIONAL CALLING PORT	UEPXR	NA	NA	NA	NA	NA	$2.12	NA	NA
2-WIRE VOICE UNBUNDLED 1-WAY OUTGOING PBXMEASURED POR	UEPXS	$2.20	$1.35	$1.79	$2.61	$2.55	$2.12	$2.28	$3.69
2-WIRE VOICE UNBUNDLED 2-WAY PBX SOUTH CAROLINA AREA PLUS CALLING PORT	UEPXT	NA	NA	NA	NA	NA	NA	NA	$3.69
2-WIRE VOICE UNBUNDLED PBX COLLIERVILLE & MEMPHIS CALLING PORT	UEPXU	NA	NA	NA	NA	NA	NA	NA	NA
2-WIRE VOICE UNBUNDLED 2-WAY PBX TENNESSEE REGIONSERV CALLING PORT	UEPXV	NA	NA	NA	NA	NA	NA	NA	NA
LOCAL NUMBER PORTABILITY (REQUIRES ONE PER PORT)	LNPCP								
2-Wire Voice Grade Loop (SL1)									
RC - 2- Wire Voice Grade Loop - Statewide	UEPLX	NA	NA	NA	NA	NA	NA	$14.18	NA
RC - 2- Wire Voice Grade Loop - Zone 1	UEPLX	$14.35	$14.90	$10.80	$14.79	$14.05	$14.59	NA	$17.02
RC - 2- Wire Voice Grade Loop - Zone 2	UEPLX	$23.31	$18.51	$12.47	$27.68	$24.14	$19.33	NA	$25.66
RC - 2- Wire Voice Grade Loop - Zone 3	UEPLX	$42.24	$24.25	$19.83	$47.78	$49.30	$27.63	NA	$33.99

BELLSOUTH/ACCESS INTEGRATED RATES
NETWORK ELEMENTS
AND OTHER SERVICES
LOOP/PORT COMBINATIONS

DESCRIPTION	USOC	AL	FL	GA	KY	LA	MS	NC	SC
RC - 2- Wire Voice Grade Loop - Zone 4	UEPLX	NA	NA	NA	NA	NA	$36.47	NA	NA
Combination Rates									
RC - 2-Wire Voice Grade Loop with 2-Wire Line Port, Statewide	Note 8	NA	NA	NA	NA	NA	NA	$16.46	NA
RC - 2-Wire Voice Grade Loop with 2-Wire Line Port, Zone 1 (Note 6)	Note 8	$16.55	$16.25	$12.59	#VALUE!	$16.60	$16.71	NA	$20.71
RC - 2-Wire Voice Grade Loop with 2-Wire Line Port, Zone 2 (Note 6)	Note 8	$25.51	$19.86	$14.26	#VALUE!	$26.69	$21.45	NA	$29.35
RC - 2-Wire Voice Grade Loop with 2-Wire Line Port, Zone 3 (Note 6)	Note 8	$44.44	$25.60	$21.62	#VALUE!	$51.85	$29.75	NA	$37.68
RC - 2-Wire Voice Grade Loop with 2-Wire Line Port, Zone 4 (Note 6)	Note 8	NA	NA	NA	NA	NA	$38.59	NA	NA
All available features, per month	UEPVF	$2.64	$3.40	$0.00	$3.39	$3.08	$3.21	$3.04	$3.04
Nonrecurring Charges									
NRC - 2-Wire Voice Grade Loop/Line Port Combination - 1st, Switch as i	USAC2	$2.80	$15.82	$2.01	$10.00	$3.80	$5.20	$2.77	$1.59
NRC - 2-Wire Voice Grade Loop/Line Port Combination - Add'l, Switch as i	USAC2	$0.41	$3.80	$0.3108	$10.00	$0.29	$0.41	$0.40	$0.40
NRC - 2-Wire Voice Grade Loop/Line Port Combination - 1st, Switch with chang	USACC	$2.80	$15.82	$2.01	$10.00	$3.80	$5.20	$2.77	$1.59
NRC - 2-Wire Voice Grade Loop/Line Port Combination - Add'l, Switch with change	USACC	$0.41	$3.80	$0.3108	$10.00	$0.29	$0.41	$0.40	$0.40
NRC - 2-Wire Voice Grade Loop/Line Port Combination - Subsequer	USAS2	$10.00	$10.00	$10.00	$10.00	$10.00	$10.00	$10.00	$10.00
NRC - 2-Wire Voice Grade Loop/Line Port Combination - OSS LSR Charge, Electronic per LSR received from the CLEC by one of the OSS interactive interfaces (Note 7)	SOMEC	$3.50	$2.75	$3.50	$3.50	$3.50	$3.50	$3.50	$3.50
NRC - 2-Wire Voice Grade Loop/Line Port Combination - Incremental Cost - Manua Svc.Order vs. Electronic - 1st	SOMAN	$40.71	$21.56	$33.67	$19.99	$31.92	$43.52	$40.18	$43.19
NRC - 2-Wire Voice Grade Loop/Line Port Combination - Incremental Cost - Manua Svc.Order vs. Electronic - Add'l	SOMAN	$9.58	$21.56	$7.88	$19.99	$7.32	$0.99	$9.45	$9.91
NRC- 2 Wire Voice Grade Loop/Line Port Combination - Subsequent Database Update Electronic		$1.44	TBD	TBD	TBD	$2.11	$2.87	$1.42	$0.71
NRC- 2 Wire Voice Grade Loop/Line Port Combination - Subsequent Database Update Manual Service Order		$8.25	TBD	TBD	TBD	$5.12	$6.88	$10.27	$8.91
NRC - Electronic Service Order Disconnec		TBD	$0.42	TBD	TBD	TBD	TBD	TBD	TBD
NRC - Incremental Manual Service Order Disconnec		$20.00	$3.84	$20.00	$20.00	$20.00	$20.00	$20.00	$20.00
NRCs for New (not Currently Combined) as ordered in Georgia									
NRC - 2-Wire Voice Grade Loop with 2-Wire Line Port - New - 1s	UEPRD	NA	NA	$22.14	NA	NA	NA	NA	NA
NRC - 2-Wire Voice Grade Loop with 2-Wire Line Port - New - Adc	UEPRD	NA	NA	$15.25	NA	NA	NA	NA	NA
NRC - 2-Wire Voice Grade Loop with 2-Wire Line Port - New - 1s	UEPPC	NA	NA	$22.14	NA	NA	NA	NA	NA
NRC - 2-Wire Voice Grade Loop with 2-Wire Line Port - New - Adc	UEPPC	NA	NA	$15.25	NA	NA	NA	NA	NA
NRC - 2-Wire Voice Grade Loop with 2-Wire Line Port - New - 1s	UEPPO	NA	NA	$22.14	NA	NA	NA	NA	NA
NRC - 2-Wire Voice Grade Loop with 2-Wire Line Port - New - Adc	UEPPO	NA	NA	$15.25	NA	NA	NA	NA	NA
NRC - 2-Wire Voice Grade Loop with 2-Wire Line Port - New - 1s	UEPP1	NA	NA	$22.14	NA	NA	NA	NA	NA
NRC - 2-Wire Voice Grade Loop with 2-Wire Line Port - New - Adc	UEPP1	NA	NA	$15.25	NA	NA	NA	NA	NA
NRC - 2-Wire Voice Grade Loop with 2-Wire Line Port - New - 1s	UEPLD	NA	NA	$22.14	NA	NA	NA	NA	NA
NRC - 2-Wire Voice Grade Loop with 2-Wire Line Port - New - Adc	UEPLD	NA	NA	$15.25	NA	NA	NA	NA	NA
NRC - 2-Wire Voice Grade Loop with 2-Wire Line Port - New - 1s	UEPXA	NA	NA	$22.14	NA	NA	NA	NA	NA
NRC - 2-Wire Voice Grade Loop with 2-Wire Line Port - New - Adc	UEPXA	NA	NA	$15.25	NA	NA	NA	NA	NA
NRC - 2-Wire Voice Grade Loop with 2-Wire Line Port - New - 1st	UEPXB	NA	NA	$22.14	NA	NA	NA	NA	NA
NRC - 2-Wire Voice Grade Loop with 2-Wire Line Port - New - Add'l	UEPXB	NA	NA	$15.25	NA	NA	NA	NA	NA
NRC - 2-Wire Voice Grade Loop with 2-Wire Line Port - New - 1s	UEPXC	NA	NA	$22.14	NA	NA	NA	NA	NA
NRC - 2-Wire Voice Grade Loop with 2-Wire Line Port - New - Adc	UEPXC	NA	NA	$15.25	NA	NA	NA	NA	NA
NRC - 2-Wire Voice Grade Loop with 2-Wire Line Port - New - 1s	UEPXD	NA	NA	$22.14	NA	NA	NA	NA	NA
NRC - 2-Wire Voice Grade Loop with 2-Wire Line Port - New - Adc	UEPXD	NA	NA	$15.25	NA	NA	NA	NA	NA
NRC - 2-Wire Voice Grade Loop with 2-Wire Line Port - New - 1s	UEPXE	NA	NA	$22.14	NA	NA	NA	NA	NA
NRC - 2-Wire Voice Grade Loop with 2-Wire Line Port - New - Adc	UEPXE	NA	NA	$15.25	NA	NA	NA	NA	NA
NRC - 2-Wire Voice Grade Loop with 2-Wire Line Port - New - 1s	UEPXL	NA	NA	$22.14	NA	NA	NA	NA	NA
NRC - 2-Wire Voice Grade Loop with 2-Wire Line Port - New - Adc	UEPXL	NA	NA	$15.25	NA	NA	NA	NA	NA

BELLSOUTH/ACCESS INTEGRATED RATES
NETWORK ELEMENTS
AND OTHER SERVICES
LOOP/PORT COMBINATIONS

DESCRIPTION	USOC	AL	FL	GA	KY	LA	MS	NC	SC
NRC - 2-Wire Voice Grade Loop with 2-Wire Line Port - New - 1	UEPXM	NA	NA	$22.14	NA	NA	NA	NA	NA
NRC - 2-Wire Voice Grade Loop with 2-Wire Line Port - New - Add'l	UEPXM	NA	NA	$15.25	NA	NA	NA	NA	NA
NRC - 2-Wire Voice Grade Loop with 2-Wire Line Port - New - 1	UEPXO	NA	NA	$22.14	NA	NA	NA	NA	NA
NRC - 2-Wire Voice Grade Loop with 2-Wire Line Port - New - Adc	UEPXO	NA	NA	$15.25	NA	NA	NA	NA	NA
NRC - 2-Wire Voice Grade Loop with 2-Wire Line Port - New - 1	UEPXS	NA	NA	$22.14	NA	NA	NA	NA	NA
NRC - 2-Wire Voice Grade Loop with 2-Wire Line Port - New - Adc	UEPXS	NA	NA	$15.25	NA	NA	NA	NA	NA
NRC - 2-Wire Voice Grade Loop/Line Port Combination - Subsequer	USAS2	NA	NA	$10.00	NA	NA	NA	NA	NA
NRC - 2-Wire Voice Grade Loop with 2-Wire Line Port - New - Disconnect - 1		NA	NA	$8.45	NA	NA	NA	NA	NA
NRC - 2-Wire Voice Grade Loop with 2-Wire Line Port - New - Disconnect - Adc		NA	NA	$3.91	NA	NA	NA	NA	NA
NRC - 2-Wire Voice Grade Loop/Line Port Combination - OSS LSR Charge, Electronic per LSR received from the CLEC by one of the OSS interactive interfaces (Note 7)	SOMEC	NA	NA	$3.50	NA	NA	NA	NA	NA
NRC - 2-Wire Voice Grade Loop with 2-Wire Line Port - Incremental Cost Manual vs Electronic - New - 1st		NA	NA	$37.06	NA	NA	NA	NA	NA
NRC - 2-Wire Voice Grade Loop with 2-Wire Line Port - Incremental Cost Manual vs Electronic - New - Add'l		NA	NA	$8.19	NA	NA	NA	NA	NA
NRC- 2 Wire Voice Grade Loop/Line Port Combination - Subsequent Database Update Electronic		NA	NA	TBD	NA	NA	NA	NA	NA
NRC- 2 Wire Voice Grade Loop/Line Port Combination - Subsequent Database Update Manual Service Order		NA	NA	TBD	NA	NA	NA	NA	NA
NRC - 2-Wire Voice Grade Loop with 2-Wire Line Port - Incremental Cost Manual vs Electronic - New - Disconnect		NA	NA	$11.17	NA	NA	NA	NA	NA
All Other Loop/Port Combinations		TBD	TBD	Note 2	TBD	TBD	TBD	TBD	TBD
LOCAL NUMBER PORTABILITY (REQUIRES ONE PER PORT	LNPCX								
NOTES:									
Interim rates subject to true-up									
1 Market Rates will apply in those areas where BellSouth is not required to provide circu switching pursuant to FCC rules.									
2 In Georgia, rates will apply for Currently Combined as well as not Currently Combine loop/port combinations unless otherwise identified.									
3 In the absence of ordered rates by a State Commission, the recurring rates fo Currently Combined combinations of loop/port network elements will be the sum of the recurring rates for the UNEs which make up the combinations, and the nonrecurring rates shall be as set forth in this section.									
4 End Office and Tandem Switching Usage and Common Transport Usage rates in the Port section of this rate exhibit shall apply to all combinations of loop/port network elements.									
5 Deleted									
6 Geographically Deaveraged UNE Zones and applicable rates have been established for certain services, as shown in this Agreement. Where Geographically Deaveraged UNE Zones and applicable rates are established, Statewide rates are obsolete. Further, BellSouth is in the process of enhancing its billing systems in order to accomodate this Geographically Deaveraged UNE Zone Rate Structure. Until these enhancements are accomplished, estimated to be mid 2001, the UNE Zone 1 rate will be billed for all services residing in Zones 1, 2, 3 or 4, i.e., Rates for services residing i UNE Zones 2, 3 and UNE Zone 4, where applicable, will not be billed. Once billing enhancements are complete, all applicable UNE Zone rates reflected in this Agreement will be billed. Reference Internet Website http://www.interconnection.bellsouth.com/become_clec/ docs/interconnection/deavuzns.pdf to view Geographically Deaveraged UNE Zone Designations by Central Office									

BELLSOUTH/ACCESS INTEGRATED RATES
NETWORK ELEMENTS
AND OTHER SERVICES
LOOP/PORT COMBINATIONS

	DESCRIPTION	USOC	AL	FL	GA	KY	LA	MS	NC	SC
7	In the absence of ordered OSS rates by a state commission, BellSouth will offer regionwide rates									
8	There is not a unique combination USOC. CLEC should submit the loop and port USOCs.									
9	Rates in TN and FL are interim and shall be trued-up when final rates are ordered.									

AMENDMENT TO
INTERCONNECTION AGREEMENT BETWEEN
BELLSOUTH TELECOMMUNICATIONS, INC.
AND ACCESS INTEGRATED NETWORKS, INC.
DATED FEBRUARY 17, 2000

This Agreement (the "Amendment") is made and entered into between BellSouth Telecommunications, Inc. ("BellSouth") a Georgia corporation, and ACCESS Integrated Networks, Inc. ("ACCESS Integrated") a Georgia corporation.

WHEREAS, The Parties desire to amend that certain Interconnection Agreement between BellSouth and ACCESS Integrated dated February 17, 2000 (the "Interconnection Agreement") in order to incorporate rates established by the Louisiana Public Service Commission ("PSC") in Docket Number U-24717-A, on September 21, 2001;

NOW THEREFORE, in consideration of the mutual provisions contained herein and other good and valuable consideration, the receipt and sufficiency of which are hereby acknowledged, BellSouth and ACCESS Integrated hereby convenant and agree as follows:

1. Those permanent rates established by the Louisiana PSC in Docket No. U-24717-A for certain Unbundled Network Elements and Local Interconnection in Louisiana are as set forth in Exhibit 1 attached hereto and incorporated herein by this reference.

2. All rate elements and rates in Attachments 1, 2, 3, 5 and 7 for Louisiana are hereby deleted and replaced in their entirety with the corresponding rates and rate elements in Exhibit 1.

3. The Parties agree that all of the other provisions of the Interconnection Agreement, dated February 17, 2000, shall remain in full force and effect.

4. The Parties further agree that either or both of the Parties is authorized to submit this Amendment to the Louisiana Public Service Commission or other regulatory body having jurisdiction over the subject matter of this Amendment, for approval subject to Section 252(e) of the federal Telecommunications Act of 1996.

This Amendment is made effective upon the date that it is signed by both Parties.

IN WITNESS WHEREOF, the parties hereto have caused this Amendment to be executed by their respective duly authorized representatives on the data indicated below.

_____	_____
BellSouth Telecommunications, Inc.	**ACCESS Integrated Networks, Inc.**
By: _____	By: _____
Title: _____	Title: _____
Date: _____	Date: _____

RESALE DISCOUNTS AND RATES

		LOUISIANA
APPLICABLE DISCOUNTS		
RESIDENCE		20.72%
BUSINESS		20.72%
CSAs*		9.05%
* Unless noted in this row, the discount for Busi		
OPERATIONAL SUPPC		
ELEMENT	USOC	
Electronic LSR	SOMEC	$3.50
Manual LSR	SOMAN	$19.99
ODUF/EODUF/CMDS R		
ENHANCED OPTION DAIL		
EODUF: Message Processing, per message		$0.250015
OPTIONAL DAILY USAGE FILE (ODUF)		
ODUF: Recording, per message		$0.0000117
ODUF: Message Processing, per message		$0.004641
ODUF: Message Processing, per Magnetic Tape provisioned		$48.45
ODUF: Data Transmission (CONNECT:DIRECT), per msg		$0.00010568

RESALE DISCOUNTS AND RATES

		LOUISIANA
CUSTOM BRANDING /		
DIRECTORY ASSISTANCE (DA) CBA via C		
Recording of DA CBA		$3,000.00
Loading of DA CBA per DRAM Card/Switch per OCN		$1, 700.00
DIRECTORY ASSISTANCE (DA) UNBRAN		
Loading of DA per OCN (1 OCN per Order)		$420.00
Loading of DA per Switch, per OCN		$16.00
OLNS SOFTWARE		
ELEMENT	USOC	
Recording of OA CBA	CBAOS	$7,000.00
Loading of OA CBA per shelf/ NAV per OCN	CBAOL	$500.00
Loading of DA CBA per DRAM Card/Switch per OCN		$1,170.00
OPERATOR ASSISTANCE (OA) UNBRAND		
Loading of OA per OCN - Regional		$1,200.00

CATEGORY		UNBUNDLED NETWORK ELEMENT	Zone	BCS	USOC	RATES ($)					OSS RATES ($)					
							Nonrecurring		Nonrecurring Disconnect		Svc Order Submitted Elec per LSR	Svc Order Submitted Manually per LSR	Incremental Charge - Manual Svc Order vs. Electronic-1st	Incremental Charge - Manual Svc Order vs. Electronic-Add'l	Incremental Charge - Manual Svc Order vs. Electronic-Disc 1st	Incremental Charge - Manual Svc Order vs. Electronic-Disc Add'l
						Rec	First	Add'l	First	Add'l	SOMEC	SOMAN	SOMAN	SOMAN	SOMAN	SOMAN
	The "Zone" shown in the sections for stand-alone loops or loops as part of a combination refers to Geographically Deaveraged UNE Zones. To view Geographically Deaveraged UNE Zone Designations by Central Office, refer to Internet Website: http://www.interconnection.bellsouth.com/become_a_clec/html/interconnection.htm															
UNBUNDLED EXCHANGE ACCESS LOOP																
	2-WIRE ANALOG VOICE GRADE LOOP															
		2-Wire Analog Voice Grade Loop - Service Level 1- Zone	1	UEANL	UEAL2	12.90	36.54	16.87				15.20				
		2-Wire Analog Voice Grade Loop - Service Level 1- Zone	2	UEANL	UEAL2	23.33	36.54	16.87				15.20				
		2-Wire Analog Voice Grade Loop - Service Level 1- Zone	3	UEANL	UEAL2	48.43	36.54	16.87				15.20				
		Loop Testing - Basic 1st Half Hou		UEANL	URET1		33.17	33.17								
		Loop Testing - Basic Additional Half Hou		UEANL	URETA		19.28	19.28								
		2 Wire Analog Voice Grade Loop-Service Level 1-Line Splitting- Zone	1	UEPSR, UEPSB	UEALS	12.90	36.54	16.87				15.20				
		2 Wire Analog Voice Grade Loop- Service Level 1-Line Splitting-Zone	2	UEPSR, UEPSB	UEALS	23.33	36.54	16.87	0.00	0.00		15.20				
		2 Wire Analog Voice Grade Loop-Service Level 1-Line Splitting-Zone	3	UEPSR, UEPSB	UEALS	48.43	36.54	16.87	0.00	0.00		15.20				
		Engineering Information Document (EI		UEANL			13.04	13.04								
		Manual Order Coordination for UVL-SL1s (per loop)		UEANL	UEAMC		7.92	7.92								
		Order Coordination for Specified Conversion Time for UVL-SL1 (per LSR)		UEANL	OCOSL		17.56	17.56								
		2-Wire Analog Voice Grade Loop - Service Level 2 w/Loop or Ground Star Signaling - Zone 1	1	UEA	UEAL2	14.93	102.10	65.72				15.20				
		2-Wire Analog Voice Grade Loop - Service Level 2 w/Loop or Ground Star Signaling - Zone 2	2	UEA	UEAL2	25.35	102.10	65.72				15.20				
		2-Wire Analog Voice Grade Loop - Service Level 2 w/Loop or Ground Star Signaling - Zone 3	3	UEA	UEAL2	50.46	102.10	65.72				15.20				
		Order Coordination for Specified Conversion Time (per LSF		UEA	OCOSL		17.56									
		2-Wire Analog Voice Grade Loop - Service Level 2 w/Reverse Battery Signaling Zone 1	1	UEA	UEAR2	14.93	102.10	65.72				15.20				
		2-Wire Analog Voice Grade Loop - Service Level 2 w/Reverse Battery Signaling Zone 2	2	UEA	UEAR2	25.35	102.10	65.72				15.20				
		2-Wire Analog Voice Grade Loop - Service Level 2 w/Reverse Battery Signaling Zone 3	3	UEA	UEAR2	50.46	102.10	65.72				15.20				
		Order Coordination for Specified Conversion Time (per LSF		UEA	OCOSL		17.56									
	4-WIRE ANALOG VOICE GRADE LOOP															
		4-Wire Analog Voice Grade Loop - Zone 1	1	UEA	UEAL4	30.81	127.40	91.02				15.20				
		4-Wire Analog Voice Grade Loop - Zone 2	2	UEA	UEAL4	38.32	127.40	91.02				15.20				
		4-Wire Analog Voice Grade Loop - Zone 3	3	UEA	UEAL4	60.39	127.40	91.02				15.20				
		Order Coordination for Specified Conversion Time (per LSF		UEA	OCOSL		17.56									
	2-WIRE ISDN DIGITAL GRADE LOOP															
		2-Wire ISDN Digital Grade Loop - Zone 1	1	UDN	U1L2X	22.09	113.34	76.96				15.20				
		2-Wire ISDN Digital Grade Loop - Zone 2	2	UDN	U1L2X	35.28	113.34	76.96				15.20				
		2-Wire ISDN Digital Grade Loop - Zone 3	3	UDN	U1L2X	65.18	113.34	76.96				15.20				
		Order Coordination For Specified Conversion Time (per LSF		UDN	OCOSL		17.56									
	2-WIRE Universal Digital Channel (UDC) COMPATIBLE LOOP															
		2-Wire Universal Digital Channel (UDC) Compatible Loop - Zone	1	UDC	UDC2X	22.09	113.34	76.96				15.20				

CATEGORY		UNBUNDLED NETWORK ELEMENT	Zone	BCS	USOC	RATES ($)					OSS RATES ($)					
							Nonrecurring		Nonrecurring Disconnect		Svc Order Submitted Elec per LSR	Svc Order Submitted Manually per LSR	Incremental Charge - Manual Svc Order vs. Electronic-1st	Incremental Charge - Manual Svc Order vs. Electronic-Add'l	Incremental Charge - Manual Svc Order vs. Electronic-Disc 1st	Incremental Charge - Manual Svc Order vs. Electronic-Disc Add'l
						Rec	First	Add'l	First	Add'l	SOMEC	SOMAN	SOMAN	SOMAN	SOMAN	SOMAN
		2-Wire Universal Digital Channel (UDC) Compatible Loop - Zone	2	UDC	UDC2X	35.28	113.34	76.96				15.20				
		2-Wire Universal Digital Channel (UDC) Compatible Loop - Zone	3	UDC	UDC2X	65.18	113.34	76.96				15.20				
	2-WIRE ASYMMETRICAL DIGITAL SUBSCRIBER LINE (ADSL) COMPATIBLE LOOP															
		2-WIRE ASYMMETRICAL DIGITAL SUBSCRIBER LINE (ADSL) COMPATIBLE LOOP														
		2 Wire Unbundled ADSL Loop including manual service inquiry & facility reservatio - Zone 1	1	UAL	UAL2X	12.29	117.08	68.36				15.20				
		2 Wire Unbundled ADSL Loop including manual service inquiry & facility reservatio - Zone 2	2	UAL	UAL2X	14.09	117.08	68.36				15.20				
		2 Wire Unbundled ADSL Loop including manual service inquiry & facility reservatio - Zone 3	3	UAL	UAL2X	15.75	117.08	68.36				15.20				
		Order Coordination for Specified Conversion Time (per LSR		UAL	OCOSL		17.56									
		2 Wire Unbundled ADSL Loop without manual service inquiry & facility reservaton Zone 1	1	UAL	UAL2W	12.29	92.83	56.02				15.20				
		2 Wire Unbundled ADSL Loop without manual service inquiry & facility reservaton Zone 2	2	UAL	UAL2W	14.09	92.83	56.02				15.20				
		2 Wire Unbundled ADSL Loop without manual service inquiry & facility reservaton Zone 3	3	UAL	UAL2W	15.75	92.83	56.02				15.20				
		Order Coordination for Specified Conversion Time (per LSR		UAL	OCOSL		17.56									
	2-WIRE HIGH BIT RATE DIGITAL SUBSCRIBER LINE (HDSL) COMPATIBLE LOOI															
		2-WIRE HIGH BIT RATE DIGITAL SUBSCRIBER LINE (HDSL) COMPATIBLE LOOP														
		2 Wire Unbundled HDSL Loop including manual service inquiry & facility reservatio - Zone 1	1	UHL	UHL2X	9.79	125.50	76.77				15.20				
		2 Wire Unbundled HDSL Loop including manual service inquiry & facility reservatio - Zone 2	2	UHL	UHL2X	11.52	125.50	76.77				15.20				
		2 Wire Unbundled HDSL Loop including manual service inquiry & facility reservatio - Zone 3	3	UHL	UHL2X	12.74	125.50	76.77				15.20				
		Order Coordination for Specified Conversion Time (per LSR		UHL	OCOSL		17.56									
		2 Wire Unbundled HDSL Loop without manual service inquiry and facilit reservation - Zone 1	1	UHL	UHL2W	9.79	101.24	64.43				15.20				
		2 Wire Unbundled HDSL Loop without manual service inquiry and facilit reservation - Zone 2	2	UHL	UHL2W	11.52	101.24	64.43				15.20				
		2 Wire Unbundled HDSL Loop without manual service inquiry and facilit reservation - Zone 3	3	UHL	UHL2W	12.74	101.24	64.43				15.20				
		Order Coordination for Specified Conversion Time (per LSR		UHL	OCOSL		17.56									
	4-WIRE HIGH BIT RATE DIGITAL SUBSCRIBER LINE (HDSL) COMPATIBLE LOOP															
		4 Wire Unbundled HDSL Loop including manual service inquiry and facilit reservation - Zone 1	1	UHL	UHL4X	16.24	153.26	104.54				15.20				
		4-Wire Unbundled HDSL Loop including manual service inquiry and facilit reservation - Zone 2	2	UHL	UHL4X	16.65	153.26	104.54				15.20				
		4-Wire Unbundled HDSL Loop including manual service inquiry and facilit reservation - Zone 3	3	UHL	UHL4X	17.34	153.26	104.54				15.20				
		Order Coordination for Specified Conversion Time (per LSR		UHL	OCOSL		17.56									
		4-Wire Unbundled HDSL Loop without manual service inquiry and facilit reservation - Zone 1	1	UHL	UHL4W	16.24	129.00	92.20				15.20				
		4-Wire Unbundled HDSL Loop without manual service inquiry and facilit reservation - Zone 2	2	UHL	UHL4W	16.65	129.00	92.20				15.20				
		4-Wire Unbundled HDSL Loop without manual service inquiry and facilit reservation - Zone 3	3	UHL	UHL4W	17.34	129.00	92.20				15.20				
		Order Coordination for Specified Conversion Time (per LSR		UHL	OCOSL		17.56									
	4-WIRE DS1 DIGITAL LOOP															

CATEGORY		UNBUNDLED NETWORK ELEMENT	Zone	BCS	USOC	RATES ($)					OSS RATES ($)					
							Nonrecurring		Nonrecurring Disconnect		Svc Order Submitted Elec per LSR	Svc Order Submitted Manually per LSR	Incremental Charge - Manual Svc Order vs. Electronic-1st	Incremental Charge - Manual Svc Order vs. Electronic-Add'l	Incremental Charge - Manual Svc Order vs. Electronic-Disc 1st	Incremental Charge - Manual Svc Order vs. Electronic-Disc Add'l
						Rec	First	Add'l	First	Add'l	SOMEC	SOMAN	SOMAN	SOMAN	SOMAN	SOMAN
		4-Wire DS1 Digital Loop - Zone 1	1	USL	USLXX	85.70	245.16	152.98				15.20				
		4-Wire DS1 Digital Loop - Zone 2	2	USL	USLXX	194.96	245.16	152.98				15.20				
		4-Wire DS1 Digital Loop - Zone 3	3	USL	USLXX	491.94	245.16	152.98				15.20				
		Order Coordination for Specified Conversion Time (per LSR		USL	OCOSL		17.56									
	4-WIRE 19.2, 56 OR 64 KBPS DIGITAL GRADE LOOP															
		4 Wire Unbundled Digital 19.2 Kbps	1	UDL	UDL19	30.99	121.86	85.48				15.20				
		4 Wire Unbundled Digital 19.2 Kbps	2	UDL	UDL19	36.78	121.86	85.48				15.20				
		4 Wire Unbundled Digital 19.2 Kbps	3	UDL	UDL19	38.92	121.86	85.48				15.20				
		4 Wire Unbundled Digital Loop 56 Kbps - Zone 1	1	UDL	UDL56	30.99	121.86	85.48				15.20				
		4 Wire Unbundled Digital Loop 56 Kbps - Zone 2	2	UDL	UDL56	36.78	121.86	85.48				15.20				
		4 Wire Unbundled Digital Loop 56 Kbps - Zone 3	3	UDL	UDL56	38.92	121.86	85.48				15.20				
		Order Coordination for Specified Conversion Time (per LSR		UDL	OCOSL		17.56									
		4 Wire Unbundled Digital Loop 64 Kbps - Zone 1	1	UDL	UDL64	30.99	121.86	85.48				15.20				
		4 Wire Unbundled Digital Loop 64 Kbps - Zone 2	2	UDL	UDL64	36.78	121.86	85.48				15.20				
		4 Wire Unbundled Digital Loop 64 Kbps - Zone 3	3	UDL	UDL64	38.92	121.86	85.48				15.20				
		Order Coordination for Specified Conversion Time (per LSR		UDL	OCOSL		17.56									
	2-WIRE Unbundled COPPER LOOP															
		2-Wire Unbundled Copper Loop/Short including manual service inquiry & facility reservation - Zone 1	1	UCL	UCLPB	12.29	116.18	67.46				15.20				
		2-Wire Unbundled Copper Loop/Short including manual service inquiry & facility reservation - Zone 2	2	UCL	UCLPB	14.09	116.18	67.46				15.20				
		2 Wire Unbundled Copper Loop/Short including manual service inquiry & facility reservation - Zone 3	3	UCL	UCLPB	15.75	116.18	67.46				15.20				
		Order Coordination for Unbundled Copper Loops (per loop		UCL	UCLMC		7.92	7.92								
		2-Wire Unbundled Copper Loop/Short without manual service inquiry and facilit reservation - Zone 1	1	UCL	UCLPW	12.29	91.92	55.12				15.20				
		2-Wire Unbundled Copper Loop/Short without manual service inquiry and facilit reservation - Zone 2	2	UCL	UCLPW	14.09	91.92	55.12				15.20				
		2-Wire Unbundled Copper Loop/Short without manual service inquiry and facilit reservation - Zone 3	3	UCL	UCLPW	15.75	91.92	55.12				15.20				
		Order Coordination for Unbundled Copper Loops (per loop)		UCL	UCLMC		7.92	7.92								
		2-Wire Unbundled Copper Loop/Long - includes manual srvc. inquiry and facilit reservation - Zone 1	1	UCL	UCL2L	17.21	116.18	67.46				15.20				
		2-Wire Unbundled Copper Loop/Long - includes manual svc. inquiry and facilit reservation - Zone 2	2	UCL	UCL2L	24.98	116.18	67.46				15.20				
		2-Wire Unbundled Copper Loop/Long - includes manual svc. inquiry and facilit reservation - Zone 3	3	UCL	UCL2L	39.57	116.18	67.46				15.20				
		Order Coordination for Unbundled Copper Loops (per loop)		UCL	UCLMC		7.92	7.92								
		2-Wire Unbundled Copper Loop/Long - without manual service inquiry and facilit reservation - Zone 1	1	UCL	UCL2W	17.21	91.92	55.12				15.20				
		2-Wire Unbundled Copper Loop/Long - without manual service inquiry and facilit reservation - Zone 2	2	UCL	UCL2W	24.98	91.92	55.12				15.20				
		2-Wire Unbundled Copper Loop/Long - without manual service inquiry and facilit reservation - Zone 3	3	UCL	UCL2W	39.57	91.92	55.12				15.20				
		Order Coordination for Unbundled Copper Loops (per loop		UCL	UCLMC		7.92	7.92								
		2-Wire Unbundled Copper Loop - Non-Designed Zone 1	1	UEQ	UEQ2X	12.40	35.27	15.60				15.20				
		2 Wire Unbundled Copper Loop - Non-Designed - Zone 2	2	UEQ	UEQ2X	14.32	35.27	15.60				15.20				
		2 Wire Unbundled Copper Loop - Non-Designed - Zone 3	3	UEQ	UEQ2X	16.87	35.27	15.60				15.20				
		Order Coordination 2 Wire Unbundled Copper Loop - Non-Designed (per loop)		UEQ	USBMC		7.92	7.92								
		Engineering Information Document		UEQ			13.04	13.04								
		Loop Testing - Basic 1st Half Hour		UEQ	URET1		33.17	33.17								

CATEGORY		UNBUNDLED NETWORK ELEMENT	Zone	BCS	USOC	RATES ($)					OSS RATES ($)					
							Nonrecurring		Nonrecurring Disconnect		Svc Order Submitted Elec per LSR	Svc Order Submitted Manually per LSR	Incremental Charge - Manual Svc Order vs. Electronic-1st	Incremental Charge - Manual Svc Order vs. Electronic-Add'l	Incremental Charge - Manual Svc Order vs. Electronic-Disc 1st	Incremental Charge - Manual Svc Order vs. Electronic-Disc Add'l
						Rec	First	Add'l	First	Add'l	SOMEC	SOMAN	SOMAN	SOMAN	SOMAN	SOMAN
		Loop Testing - Basic Additional Half Hour		UEQ	URETA		19.28	19.28								
	4-WIRE COPPER LOOP															
		4-Wire Copper Loop/Short - including manual service inquiry and facility reservation - Zone 1	1	UCL	UCL4S	22.27	139.69	90.96				15.20				
		4-Wire Copper Loop/Short - including manual service inquiry and facility reservation - Zone 2	2	UCL	UCL4S	18.95	139.69	90.96				15.20				
		4-Wire Copper Loop/Short - including manual service inquiry and facility reservation - Zone 3	3	UCL	UCL4S	10.99	139.69	90.96				15.20				
		Order Coordination for Unbundled Copper Loops (per loop		UCL	UCLMC		7.92	7.92								
		4-Wire Copper Loop/Short - without manual service inquiry and facility reservation Zone 1	1	UCL	UCL4W	22.27	115.43	78.63				15.20				
		4-Wire Copper Loop/Short - without manual service inquiry and facility reservation Zone 2	2	UCL	UCL4W	18.95	115.43	78.63				15.20				
		4-Wire Copper Loop/Short - without manual service inquiry and facility reservation Zone 3	3	UCL	UCL4W	10.99	115.43	78.63				15.20				
		Order Coordination for Unbundled Copper Loops (per loop		UCL	UCLMC		7.92	7.92								
		4-Wire Unbundled Copper Loop/Long - includes manual svc. inquiry and facilit reservation - Zone 1	1	UCL	UCL4L	26.17	139.69	90.96				15.20				
		4-Wire Unbundled Copper Loop/Long - includes manual svc. inquiry and facilit reservation - Zone 2	2	UCL	UCL4L	28.47	139.69	90.96				15.20				
		4-Wire Unbundled Copper Loop/Long - includes manual svc. inquiry and facilit reservation - Zone 3	3	UCL	UCL4L	62.93	139.69	90.96				15.20				
		Order Coordination for Unbundled Copper Loops (per loop		UCL	UCLMC		7.92	7.92								
		4-Wire Unbundled Copper Loop/Long - without manual svc. inquiry and facilit reservation - Zone 1	1	UCL	UCL4O	26.17	115.43	78.63				15.20				
		4-Wire Unbundled Copper Loop/Long - without manual svc. inquiry and facilit reservation - Zone 2	2	UCL	UCL4O	28.47	115.43	78.63				15.20				
		4-Wire Unbundled Copper Loop/Long - without manual svc. inquiry and facilit reservation - Zone 3	3	UCL	UCL4O	62.93	115.43	78.63				15.20				
		Order Coordination for Unbundled Copper Loops (per loop		UCL	UCLMC		7.92	7.92								
LOOP MODIFICATION																
		Unbundled Loop Modification, Removal of Load Coils - 2 Wire pair less than or equal to 18k ft		UAL, UHL, UCL, UEQ, ULS	ULM2L		0.00	0.00								
		Unbundled Loop Modification, Removal of Load Coils - 2 wire greater than 18k		UCL, ULS	ULM2G		0.00	0.00								
		Unbundled Loop Modification Removal of Load Coils - 4 Wire less than or equal t 18K ft		UHL, UCL	ULM4L		0.00	0.00								
		Unbundled Loop Modification Removal of Load Coils - 4 Wire pair greater than 18 ft		UCL	ULM4G		0.00	0.00								
		Unbundled Loop Modification Removal of Bridged Tap Removal, per unbundled loop		UAL, UHL, UCL, UEQ, UEF, ULS	ULMBT		12.15	12.15								
SUB-LOOPS																
	Sub-Loop Distribution															
		Sub-Loop - Per Cross Box Location - CLEC Feeder Facility Set-U		UEANL	USBSA		144.09	144.09				15.20				
		Sub-Loop - Per Cross Box Location - Per 25 Pair Panel Set-U		UEANL	USBSB		10.99	10.99				15.20				
		Sub-Loop - Per Building Equipment Room - CLEC Feeder Facility Set-U		UEANL	USBSC		86.16	86.16				15.20				
		Sub-Loop - Per Building Equipment Room - Per 25 Pair Panel Set-U		UEANL	USBSD		27.13	27.13				15.20				

CATEGORY		UNBUNDLED NETWORK ELEMENT	Zone	BCS	USOC	RATES ($)					OSS RATES ($)					
							Nonrecurring		Nonrecurring Disconnect		Svc Order Submitted Elec per LSR	Svc Order Submitted Manually per LSR	Incremental Charge - Manual Svc Order vs. Electronic-1st	Incremental Charge - Manual Svc Order vs. Electronic-Add'l	Incremental Charge - Manual Svc Order vs. Electronic-Disc 1st	Incremental Charge - Manual Svc Order vs. Electronic-Disc Add'l
						Rec	First	Add'l	First	Add'l	SOMEC	SOMAN	SOMAN	SOMAN	SOMAN	SOMAN
		Sub-Loop Distribution Per 2-Wire Analog Voice Grade Loop - Zone	1	UEANL	USBN2	7.57	63.89	30.06				15.20				
		Sub-Loop Distribution Per 2-Wire Analog Voice Grade Loop - Zone	2	UEANL	USBN2	12.75	63.89	30.06				15.20				
		Sub-Loop Distribution Per 2-Wire Analog Voice Grade Loop - Zone	3	UEANL	USBN2	21.45	63.89	30.06				15.20				
		Order Coordination for Unbundled Sub-Loops, per sub-loop pa		UEANL	USBMC		7.92	7.92								
		Sub-Loop Distribution Per 4-Wire Analog Voice Grade Loop - Zone	1	UEANL	USBN4	11.76	76.75	42.92				15.20				
		Sub-Loop Distribution Per 4-Wire Analog Voice Grade Loop - Zone	2	UEANL	USBN4	16.84	76.75	42.92				15.20				
		Sub-Loop Distribution Per 4-Wire Analog Voice Grade Loop - Zone	3	UEANL	USBN4	19.27	76.75	42.92				15.20				
		Order Coordination for Unbundled Sub-Loops, per sub-loop pa		UEANL	USBMC		7.92	7.92								
		Sub-Loop 2-Wire Intrabuilding Network Cable (INC		UEANL	USBR2	2.91	51.48	17.65				15.20				
		Order Coordination for Unbundled Sub-Loops, per sub-loop pa		UEANL	USBMC		7.92	7.92								
		Sub-Loop 4-Wire Intrabuilding Network Cable (INC		UEANL	USBR4	6.58	57.54	23.71				15.20				
		Order Coordination for Unbundled Sub-Loops, per sub-loop pa		UEANL	USBMC		7.92	7.92								
		2 Wire Copper Unbundled Sub-Loop Distribution - Zone	1	UEF	UCS2X	6.26	63.89	30.06				15.20				
		2 Wire Copper Unbundled Sub-Loop Distribution - Zone	2	UEF	UCS2X	10.07	63.89	30.06				15.20				
		2 Wire Copper Unbundled Sub-Loop Distribution - Zone	3	UEF	UCS2X	12.70	63.89	30.06				15.20				
		Order Coordination for Unbundled Sub-Loops, per sub-loop pa		UEF	USBMC		7.92	7.92								
		4 Wire Copper Unbundled Sub-Loop Distribution - Zone	1	UEF	UCS4X	8.03	76.75	42.92				15.20				
		4 Wire Copper Unbundled Sub-Loop Distribution - Zone	2	UEF	UCS4X	10.71	76.75	42.92				15.20				
		4 Wire Copper Unbundled Sub-Loop Distribution - Zone	3	UEF	UCS4X	6.08	76.75	42.92				15.20				
		Order Coordination for Unbundled Sub-Loops, per sub-loop pa		UEF	USBMC		7.92	7.92								
	Sub-Loop Feeder															
		USL-Feeder, DS0 Set-up per Cross Box location - CLEC Distribution Facility set-u		UEA, UDN,UCL,UDL, UDC	USBFW		144.09									
		USL Feeder - DS0 Set-up per Cross Box location - per 25 pair set-up		UEA, UDN,UCL,UDL, UDC	USBFX		10.99	10.99								
		USL Feeder DS1 Set-up at DSX location, per DS1 terminatio		USL	USBFZ		568.98	11.30								
		Unbundled Sub-Loop Feeder Loop, 2 Wire Ground Start, Voice Grade - Zone	1	UEA	USBFA	8.71	89.81	54.35				15.20				
		Unbundled Sub-Loop Feeder Loop, 2 Wire Ground-Start, Voice Grade - Zone	2	UEA	USBFA	13.64	89.81	54.35				15.20				
		Unbundled Sub-Loop Feeder Loop, Per 2 Wire Ground-Start, Voice Grade - Zone	3	UEA	USBFA	30.21	89.81	54.35				15.20				
		Order Coordination for Specified Conversion Time, per LS		UEA	OCOSL		17.56									
		Unbundlde Sub-Loop Feeder Loop, 2 Wire Loop-Start, Voice Grade - Zone	1	UEA	USBFB	8.71	89.81	54.35				15.20				
		Unbundled Sub-Loop Feeder Loop, 2 Wire Loop-Start, Voice Grade - Zone	2	UEA	USBFB	13.64	89.81	54.35				15.20				
		Unbundled Sub-Loop Feeder Loop, 2 Wire Start Loop, Voice Grade - Zone	3	UEA	USBFB	30.21	89.81	54.35				15.20				
		Order Coordination for Specified Time Conversion, per LS		UEA	OCOSL		17.56									
		Unbundled Sub-Loop Feeder Loop, 2 Wire Reverse Battery, Voice Grade - Zone	1	UEA	USBFC	8.71	89.81	54.35				15.20				
		Unbundled Sub-Loop Feeder Loop, 2 Wire Reverse Battery, Voice Grade - Zone	2	UEA	USBFC	13.64	89.81	54.35				15.20				
		Unbundled Sub-Loop Feeder Loop, 2 Wire Analog Reverse Battery, Voice Grade Zone 3	3	UEA	USBFC	30.21	89.81	54.35				15.20				
		Order Coordination For Specified Conversion Time, per LSI		UEA	OCOSL		17.56									
		Unbundled Sub-Loop Feeder Loop, 4 Wire Ground-Start, Voice Grade - Zone	1	UEA	USBFD	21.44	103.69	67.31				15.20				
		Unbundled Sub-Loop Feeder Loop, 4 Wire Ground-Start, Voice Grade - Zone	2	UEA	USBFD	24.66	103.69	67.31				15.20				
		Unbundled Sub-Loop Feeder Loop, 4 Wire Ground Start, Voice Grade - Zone	3	UEA	USBFD	42.84	103.69	67.31				15.20				
		Order Coordination For Specified Conversion Time, Per LSI		UEA	OCOSL		17.56									
		Unbundled Sub-Loop Feeder Loop, 4 Wire Loop-Start, Voice Grade - Zone	1	UEA	USBFE	21.44	103.69	67.31				15.20				
		Unbundled Sub-Loop Feeder Loop, 4 Wire Loop-Start, Voice Grade - Zone	2	UEA	USBFE	24.66	103.69	67.31				15.20				
		Unbundled Sub-Loop Feeder Loop, 4 Wire Loop-Start, Voice Grade - Zone	3	UEA	USBFE	42.84	103.69	67.31				15.20				
		Order Coordination For Specified Conversion Time, Per LSI		UEA	OCOSL		17.56									
		Unbundled Sub-Loop Feeder Loop, 2 Wire ISDN BRI - Zone	1	UDN	USBFF	15.44	102.58	66.20				15.20				
		Unbundled Sub-Loop Feeder Loop, 2-Wire ISDN BRI - Zone	2	UDN	USBFF	23.32	102.58	66.20				15.20				
		Unbundled Sub-Loop Feeder Loop, 2-Wire ISDN BRI - Zone	3	UDN	USBFF	44.57	102.58	66.20				15.20				

CATEGORY		UNBUNDLED NETWORK ELEMENT	Zone	BCS	USOC	RATES ($)					OSS RATES ($)					
							Nonrecurring		Nonrecurring Disconnect		Svc Order Submitted Elec per LSR	Svc Order Submitted Manually per LSR	Incremental Charge - Manual Svc Order vs. Electronic-1st	Incremental Charge - Manual Svc Order vs. Electronic-Add'l	Incremental Charge - Manual Svc Order vs. Electronic-Disc 1st	Incremental Charge - Manual Svc Order vs. Electronic-Disc Add'l
						Rec	First	Add'l	First	Add'l	SOMEC	SOMAN	SOMAN	SOMAN	SOMAN	SOMAN
		Order Coordination For Specified Conversion Time, Per LSI		UDN	OCOSL		17.56									
		Unbundled Sub-Loop Feeder, 2 Wire UDC (IDSL compatible	1	UDC	USBFS	15.44	102.58	66.20				15.20				
		Unbundled Sub-Loop Feeder, 2 Wire UDC (IDSL compatible	2	UDC	USBFS	23.32	102.58	66.20				15.20				
		Unbundled Sub-Loop Feeder, 2 Wire UDC (IDSL compatible	3	UDC	USBFS	44.57	102.58	66.20				15.20				
		Unbundled Sub-Loop Feeder Loop, 4-Wire DS1 - Zone 1	1	USL	USBFG	55.38	98.15	61.77				15.20				
		Unbundled Sub-Loop Feeder Loop, 4-Wire DS1 - Zone 2	2	USL	USBFG	167.83	98.15	61.77				15.20				
		Unbundled Sub-Loop Feeder Loop, 4-Wire DS1 - Zone 3	3	USL	USBFG	469.87	98.15	61.77				15.20				
		Order Coordination For Specified Conversion Time, Per LSI		USL	OCOSL		17.56									
		Unbundled Sub-Loop Feeder, 2-Wire Copper Loop - Zone	1	UCL	USBFH	6.96	81.36	44.98				15.20				
		Unbundled Sub-Loop Feeder Loop, 2-Wire Copper Loop - Zone	2	UCL	USBFH	4.97	81.36	44.98				15.20				
		Unbundled Sub-Loop Feeder Loop, 2-Wire Copper Loop - Zone	3	UCL	USBFH	3.99	81.36	44.98				15.20				
		Order Coordination For Specified Conversion Time, per LSI		UCL	OCOSL		17.56									
		Sub-Loop Feeder - Per 4-Wire Copper Loop - Zone 1	1	UCL	USBFJ	15.68	98.07	61.69				15.20				
		Sub-Loop Feeder - Per 4-Wire Copper Loop - Zone 2	2	UCL	USBFJ	9.68	98.07	61.69				15.20				
		Sub-Loop Feeder - Per 4-Wire Copper Loop - Zone 3	3	UCL	USBFJ	6.39	98.07	61.69				15.20				
		Order Coordination For Specified Conversion Time, per LSI		UCL	OCOSL		17.56									
		Sub-Loop Feeder - Per 4-Wire 19.2 Kbps Digital Grade Loo	1	UDL	USBFN	22.61	98.15	61.77				15.20				
		Sub-Loop Feeder - Per 4-Wire 19.2 Kbps Digital Grade Loo	2	UDL	USBFN	22.87	98.15	61.77				15.20				
		Sub-Loop Feeder - Per 4-Wire 19.2 Kbps Digital Grade Loo	3	UDL	USBFN	24.25	98.15	61.77				15.20				
		Sub-Loop Feeder - Per 4-Wire 56 Kbps Digital Grade Loop - Zone	1	UDL	USBFO	22.61	98.15	61.77				15.20				
		Sub-Loop Feeder - Per 4-Wire 56 Kbps Digital Grade Loop - Zone	2	UDL	USBFO	22.87	98.15	61.77				15.20				
		Sub-Loop Feeder - Per 4-Wire 56 Kbps Digital Grade Loop - Zone	3	UDL	USBFO	24.25	98.15	61.77				15.20				
		Order Coordination For Specified Time Conversion, per LSI		UDL	OCOSL		17.56									
		Sub-Loop Feeder - Per 4-Wire 64 Kbps Digital Grade Loop - Zone	1	UDL	USBFP	22.61	98.15	61.77				15.20				
		Sub-Loop Feeder - Per 4-Wire 64 Kbps Digital Grade Loop - Zone	2	UDL	USBFP	22.87	98.15	61.77				15.20				
		Sub-Loop Feeder - Per 4-Wire 64 Kbps Digital Grade Loop - Zone	3	UDL	USBFP	24.25	98.15	61.77				15.20				
		Order Coordination For Specified Conversion Time, per LSI		UDL	OCOSL		17.56									
		Sub Loop Feeder - DS3 - Per Mile Per Montl		UE3	1L5SL	17.00										
		Sub Loop Feeder - DS3 - Facility Termination Per Montl		UE3	USBF1	368.44	3,381.00	406.56	158.98	90.12		15.20				
		Sub Loop Feeder – STS-1 – Per Mile Per Montl		UDLSX	1L5SL	17.00										
		Sub Loop Feeder - STS-1 - Facility Termination Per Montl		UDLSX	USBF7	395.92	3,381.00	406.56	158.98	90.12		15.20				
		Sub Loop Feeder – OC-3 – Per Mile Per Montl		UDLO3	1L5SL	12.90										
		Sub Loop Feeder - OC-3 - Facility Termination Protection Per Mont		UDLO3	USBF5	60.45										
		Sub Loop Feeder - OC-3 - Facility Termination Per Montl		UDLO3	USBF2	594.77	3,381.00	406.56	158.98	90.12		15.20				
		Sub Loop Feeder - OC-12 - Per Mile Per Montl		UDL12	1L5SL	15.87										
		Sub Loop Feeder - OC-12 - Facility Termination Protection Per Mont		UDL12	USBF6	683.03										
		Sub Loop Feeder - OC-12 - Facility Termination Per Mont		UDL12	USBF3	1,922.00	3,381.00	406.56	158.98	90.12		15.20				
		Sub Loop Feeder - OC-48 - Per Mile Per Montl		UDL48	1L5SL	52.07										
		Sub Loop Feeder - OC-48 - Facility Termination Protection Per Mont		UDL48	USBF9	341.64										
		Sub Loop Feeder - OC-48 - Facility Termination Per Mont		UDL48	USBF4	1,663.00	3,566.00	406.56	158.98	90.12		15.20				
		Sub Loop Feeder - OC-12 Interface On OC-48		UDL48	USBF8	385.45	787.24	406.56	158.98	90.12		15.20				
	Unbundled Sub-Loop Modification															
		Unbundled Sub-Loop Modification - 2-W Copper Dist Load Coil/Equip Removal pe 2-W PR		UEF	ULM2X		0.00	0.00				15.20				
		Unbundled Sub-loop Modification - 4-W Copper Dist Load Coil/Equip Removal per W PR		UEF	ULM4X		0.00	0.00				15.20				
		Unbundled Sub-loop Modification - 2-w/4-w Copper Dist Bridged Tap Removal, pe PR unloaded		UEF	ULM4T		224.55	4.29				15.20				
	Unbundled Network Terminating Wire (UNTW)															
		Unbundled Network Terminating Wire (UNTW) per Pa		UENTW	UENPP	0.3454	14.72	14.72				15.20				
	Network Interface Device (NID)															

CATEGORY		UNBUNDLED NETWORK ELEMENT	Zone	BCS	USOC	RATES ($)					OSS RATES ($)					
							Nonrecurring		Nonrecurring Disconnect		Svc Order Submitted Elec per LSR	Svc Order Submitted Manually per LSR	Incremental Charge - Manual Svc Order vs. Electronic-1st	Incremental Charge - Manual Svc Order vs. Electronic-Add'l	Incremental Charge - Manual Svc Order vs. Electronic-Disc 1st	Incremental Charge - Manual Svc Order vs. Electronic-Disc Add'l
						Rec	First	Add'l	First	Add'l	SOMEC	SOMAN	SOMAN	SOMAN	SOMAN	SOMAN
		Network Interface Device (NID) - 1-2 lines		UENTW	UND12		42.26	27.83				15.20				
		Network Interface Device (NID) - 1-6 lines		UENTW	UND16		62.86	48.43				15.20				
		Network Interface Device Cross Connect - 2 W		UENTW	UNDC2		5.73	5.73				15.20				
		Network Interface Device Cross Connect - 4W		UENTW	UNDC4		5.73	5.73				15.20				
UNBUNDLED LOOP CONCENTRATION																
		Unbundled Loop Concentration - System A (TR008		ULC	UCT8A	374.26	316.00	316.00				15.20				
		Unbundled Loop Concentration - System B (TR008		ULC	UCT8B	53.40	131.67	131.67				15.20				
		Unbundled Loop Concentration - System A (TR303		ULC	UCT3A	412.08	316.00	316.00				15.20				
		Unbundled Loop Concentration - System B (TR303		ULC	UCT3B	89.98	131.67	131.67				15.20				
		Unbundled Loop Concentration - DS1 Loop Interface Car		ULC	UCTCO	5.12	61.46	44.74				15.20				
		Unbundled Loop Concentration - ISDN Loop Interface (Brite Carc		UDN	ULCC1	8.12	10.23	10.18								
		Unbundled Loop Concentration - UDC Loop Interface (Brite Carc		UDC	ULCCU	8.12	10.23	10.18								
		Unbundled Loop Concentration - -2 Wire Voice-Loop Start or Ground Start Loop Interface (POTS Card)		UEA	ULCC2	2.03	10.23	10.18								
		Unbundled Loop Concentration - 2 Wire Voice - Reverse Battery Loop Interfac (SPOTS Card)		UEA	ULCCR	12.07	10.23	10.18								
		Unbundled Loop Concentration - 4 Wire Voice Loop Interface (Specials Car		UEA	ULCC4	7.20	10.23	10.18								
		Unbundled Loop Concentration - TEST CIRCUIT Car		ULC	UCTTC	35.19	10.23	10.18				15.20				
		Unbundled Loop Concentration - Digital 19.2 Kbps Data Loop Interfac		UDL	ULCC7	10.67	10.23	10.18								
		Unbundled Loop Concentration - Digital 56 Kbps Data Loop Interfac		UDL	ULCC5	10.67	10.23	10.18								
		Unbundled Loop Concentration - Digital 64 Kbps Data Loop Interfac		UDL	ULCC6	10.67	10.23	10.18								
		Unbundled Loop Concentration - Loop Interface For Digital 19.2 Kbps Dat				10.63	10.23	10.18								
UNE OTHER, PROVISIONING ONLY - NO RATE																
		NID - Dispatch and Service Order for NID installation		UENTW	UNDBX											
		UNTW Circuit Id Establishment, Provisioning Only - No Rate		UENTW	UENCE											
		Unbundled Contract Name, Provisioning Only - No Rate		UEANL, UEF,UEQ,UENTW	UNECN											
		Unbundled Contact Name, Provisioning Only - no rate		UAL,UCL,UDC, UDL,UDN,UEA, UHL,ULC	UNECN	0.00	0.00									
		Unbundled Sub-Loop Feeder-2 Wire Cross Box Jumper - no rat		UEA,UDN,UCL, UDC	USBFQ	0.00	0.00									
		Unbundled Sub-Loop Feeder-4 Wire Cross Box Jumper - no rat		UEA,USL,UCL,UDL	USBFR	0.00	0.00									
		Unbundled DS1 Loop - Superframe Format Option - no rat		USL	CCOSF	0.00	0.00									
		Unbundled DS1 Loop - Expanded Superframe Format option - no rat		USL	CCOEF	0.00	0.00									
HIGH CAPACITY UNBUNDLED LOCAL LOOP																
	NOTE: 4 month minimum billing period															
		High Capacity Unbundled Local Loop - DS3 - Per Mile per mont		UE3	1L5ND	10.04										
		High Capacity Unbundled Local Loop - DS3 - Facility Termination per mont		UE3	UE3PX	362.34	438.46	256.30				15.20				
		High Capacity Unbundled Local Loop - STS-1 - Per Mile per mont		UDLSX	1L5ND	10.04										

CATEGORY		UNBUNDLED NETWORK ELEMENT	Zone	BCS	USOC	RATES ($)					OSS RATES ($)					
							Nonrecurring		Nonrecurring Disconnect		Svc Order Submitted Elec per LSR	Svc Order Submitted Manually per LSR	Incremental Charge - Manual Svc Order vs. Electronic-1st	Incremental Charge - Manual Svc Order vs. Electronic-Add'l	Incremental Charge - Manual Svc Order vs. Electronic-Disc 1st	Incremental Charge - Manual Svc Order vs. Electronic-Disc Add'l
						Rec	First	Add'l	First	Add'l	SOMEC	SOMAN	SOMAN	SOMAN	SOMAN	SOMAN
		High Capacity Unbundled Local Loop - STS-1 - Facility Termination per mont		UDLSX	UDLS1	374.56	438.46	256.30				15.20				
LOOP MAKE-UP																
		Loop Makeup - Preordering Without Reservation, per working or spare facilit queried (Manual).		UMK	UMKLW		23.29	23.29								
		Loop Makeup - Preordering With Reservation, per spare facility queried (Manual).		UMK	UMKLP		24.70	24.70								
		Loop Makeup--With or Without Reservation, per working or spare facility querie (Mechanized)		UMK	PSUMK		0.19	0.19								
LINE SHARING																
		Line Sharing Splitter, per System 96 Line Capacit		ULS	ULSDA	187.17	183.33	0.00	0.00	0.00		0.00				
		Line Sharing Splitter, per System 24 Line Capacit		ULS	ULSDB	46.79	183.33	0.00	0.00	0.00		0.00				
		Line Sharing Splitter, Per System, 8 Line Capacit		ULS	ULSD8	15.59	183.33	0.00	0.00	0.00		0.00				
		Line Sharing - per Line Activatio		ULS	ULSDC	0.61	17.97	10.29	0.00	0.00		15.20				
		Line Sharing - per Subsequent Activity per Line Rearrangemer		ULS	ULSDS		15.91	7.95				15.20				
		Line Sharing-DLEC Owned Splitter in CO-CFA activaton-deactivation (per LSOD)		ULS	ULSDG		83.98		0.00							
UNBUNDLED TRANSPORT																
	NOTE: INTEROFFICE CHANNEL - DEDICATED TRANSPORT - minimum billing period: below DS3 = one month, DS3 and above four months															
	INTEROFFICE CHANNEL - DEDICATED TRANSPORT - VOICE GRADE															
		Interoffice Channel - Dedicated Transport - 2-Wire Voice Grade - Per Mile pe month		U1TVX	1L5XX	0.013										
		Interoffice Channel - Dedicated Transport- 2- Wire Voice Grade - Facilit Termination per mont		U1TVX	U1TV2	22.60	39.36	26.62				15.20				
		Interoffice Channel - Dedicated Transpor t- 2-Wire Voice Grade Rev Bat. - Per Mil per month		U1TVX	1L5XX	0.013										
		Interoffice Channel - Dedicated Transport- 2- Wire VG Rev Bat. - Facilit Termination per mont		U1TVX	U1TR2	22.60	39.36	26.62	0.00	0.00		15.20				
		Interoffice Channel - Dedicated Transport - 4-Wire Voice Grade - Per Mile pe month		U1TVX	1L5XX	0.013										
		Interoffice Channel - Dedicated Transport - 4- Wire Voice Grade - Facilit Termination per month		U1TVX	U1TV4	19.81	39.36	26.62				15.20				
		Interoffice Channel - Dedicated Transport - 56 kbps - per mile per mont		U1TDX	1L5XX	0.013										
		Interoffice Channel - Dedicated Transport - 56 kbps - Facility Termination per mon		U1TDX	U1TD5	15.61	39.37	26.62				15.20				
		Interoffice Channel - Dedicated Transport - 64 kbps - per mile per mont		U1TDX	1L5XX	0.013										
		Interoffice Channel - Dedicated Transport - 64 kbps - Facility Termination per mon		U1TDX	U1TD6	15.61	39.37	26.62	0.00	0.00		15.20				
	INTEROFFICE CHANNEL - DEDICATED TRANSPORT - DS1															
		Interoffice Channel - Dedicated Channel - DS1 - Per Mile per mont		U1TD1	1L5XX	0.2652										
		Interoffice Channel - Dedicated Tranport - DS1 - Facility Termination per mon		U1TD1	U1TF1	70.47	86.69	79.44				15.20				
	INTEROFFICE CHANNEL - DEDICATED TRANSPORT- DS3															
		Interoffice Channel - Dedicated Transport - DS3 - Per Mile per mont		U1TD3	1L5XX	6.04										
		Interoffice Channel - Dedicated Transport - DS3 - Facility Termination per mon		U1TD3	U1TF3	850.45	270.69	158.05				15.20				
	INTEROFFICE CHANNEL - DEDICATED TRANSPORT- STS-1															
		Interoffice Channel - Dedicated Transport - STS-1 - Per Mile per mont		U1TS1	1L5XX	6.04										
		Interoffice Channel - Dedicated Transport - STS-1 - Facility Termination per mon		U1TS1	U1TFS	830.19	270.69	158.05				15.20				

CATEGORY	UNBUNDLED NETWORK ELEMENT	Zone	BCS	USOC	RATES ($)					OSS RATES ($)					
						Nonrecurring		Nonrecurring Disconnect		Svc Order Submitted Elec per LSR	Svc Order Submitted Manually per LSR	Incremental Charge - Manual Svc Order vs. Electronic-1st	Incremental Charge - Manual Svc Order vs. Electronic-Add'l	Incremental Charge - Manual Svc Order vs. Electronic-Disc 1st	Incremental Charge - Manual Svc Order vs. Electronic-Disc Add'l
					Rec	First	Add'l	First	Add'l	SOMEC	SOMAN	SOMAN	SOMAN	SOMAN	SOMAN
	LOCAL CHANNEL - DEDICATED TRANSPORT														
	NOTE: LOCAL CHANNEL DEDICATED TRANSPORT - minimum billing period - below DS3=one month, DS3 and above=four months														
	Local Channel - Dedicated - 2-Wire Voice Grade Per Mont		ULDVX	ULDV2	18.32	187.51	32.21				15.20				
	Local Channel - Dedicated - 2-Wire Voice Grade Rev Bat per mont		ULDVX	ULDR2	18.32	187.51	32.21	0.00	0.00		15.20				
	Local Channel - Dedicated - 4-Wire Voice Grade per mont		UNDVX	ULDV4	19.41	187.94	32.63				15.20				
	Local Channel - Dedicated - DS1 per month - Zone 1	1	ULDD1	ULDF1	39.18	172.34	149.27				15.20				
	Local Channel - Dedicated - DS1 per month - Zone 2	2	ULDD1	ULDF1	121.58	172.34	149.27				15.20				
	Local Channel - Dedicated - DS1 per month - Zone 3	3	ULDD1	ULDF1	70.02	172.34	149.27				15.20				
	Local Channel - Dedicated - DS3 - Per Mile per montl		ULDD3	1L5NC	7.82										
	Local Channel - Dedicated - DS3 - Facility Termination per mont		ULDD3	ULDF3	469.44	438.46	256.30				15.20				
	Local Channel - Dedicated - STS-1- Per Mile per montl		ULDS1	1L5NC	7.82										
	Local Channel - Dedicated - STS-1 - Facility Termination per mont		ULDS1	ULDFS	457.22	438.46	256.30	0.00	0.00		15.20				
MULTIPLEXERS															
	Channelization - DS1 to DS0 Channel Systen		UXTD1	MQ1	105.09	88.41	60.76				15.20				
	OCU-DP COCI (data) - DS1 to DS0 Channel System - per month (2.4-64kbs		UDL	1D1DD	1.38	6.39	4.58								
	2-wire ISDN COCI (BRITE) - DS1 to DS0 Channel Systsem - per montl		UDN	UC1CA	2.96	6.39	4.58								
	Voice Grade COCI - DS1 to DS0 Channel System - per montl		UEA	1D1VG	0.6497	6.39	4.58								
	DS3 to DS1 Channel System per month		UXTD3	MQ3	201.48	172.99	91.25				15.20				
	STS1 to DS1 Channel System per month		UXTS1	MQ3	201.48	172.99	91.25				15.20				
	DS3 Interface Unit (DS1 COCI) used with Loop per month		USL	UC1D1	11.78	6.39	4.58								
DARK FIBER															
	Dark Fiber, Four Fiber Strands, Per Route Mile or Fraction Thereof per month Local Channel		UDF	1L5DC	52.23										
	NRC Dark Fiber - Local Channe		UDF	UDFC4		620.60	133.88				15.20				
	Dark Fiber, Four Fiber Strands, Per Route Mile or Fraction Thereof per month Interoffice Channe		UDF	1L5DF	25.28										
	NRC Dark Fiber - Interoffice Channe		UDF	UDF14		620.60	133.88	0.00	0.00		15.20				
	Dark Fiber, Four Fiber Strands, Per Route Mile or Fraction Thereof per month Local Loop		UDF	1L5DL	52.23										
	NRC Dark Fiber - Local Loop		UDF	UDFL4		620.60	133.88	0.00	0.00		15.20				
TRANSPORT OTHER															
	Optional Features & Functions:														
	Clear Channel Capability (B8ZS/ESF) Option - Subsequent - per DS1 Channe		UNC1X	CCOEF		184.65	23.70	1.97	0.77			29.20	3.92		
	Clear Channel Capability (B8ZS/SF) Option - Subsequent - per DS1 Channe		UNC1X	CCOSF		184.65	23.70	1.97	0.77			29.20	3.92		
8XX ACCESS TEN DIGIT SCREENING															
	8XX Access Ten Digit Screening, Per Cal		OHD		0.0006387										
	8XX Access Ten Digit Screening, Reservation Charge Per 8XX Number Reserve		OHD	N8R1X		2.51	0.43				15.20				
	8XX Access Ten Digit Screening, Per 8XX No. Established W/O POTS Translatior		OHD			5.77	0.78				15.20				
	8XX Access Ten Digit Screening, Per 8XX No. Established With POTS Translatior		OHD	N8FTX		5.77	0.78				15.20				
	8XX Access Ten Digit Screening, Customized Area of Service Per 8XX Numbe		OHD	N8FCX		2.51	1.26				15.20				
	8XX Access Ten Digit Screening, Multiple InterLATA CXR Routing Per CXF Requested Per 8XX No.		OHD	N8FMX		2.93	1.68				15.20				
	8XX Access Ten Digit Screening, Change Charge Per Reques		OHD	N8FAX		2.93	0.43				15.20				
	8XX Access Ten Digit Screening, Call Handling and Destination Feature		OHD	N8FDX		2.51					15.20				
	8XX Access Ten Digit Screening, w/ 8XX No. Delivery, per quer		OHD		0.0006387										
	8XX Access Ten Digit Screening, w/ POTS No. Delivery, per quer		OHD		0.0006387										
LINE INFORMATION DATA BASE ACCESS (LIDB)															
	LIDB Common Transport Per Query		OQT		0.0000221										
	LIDB Validation Per Query		OQU		0.0135077										

CATEGORY	UNBUNDLED NETWORK ELEMENT	Zone	BCS	USOC	RATES ($)					OSS RATES ($)					
						Nonrecurring		Nonrecurring Disconnect		Svc Order Submitted Elec per LSR	Svc Order Submitted Manually per LSR	Incremental Charge - Manual Svc Order vs. Electronic-1st	Incremental Charge - Manual Svc Order vs. Electronic-Add'l	Incremental Charge - Manual Svc Order vs. Electronic-Disc 1st	Incremental Charge - Manual Svc Order vs. Electronic-Disc Add'l
					Rec	First	Add'l	First	Add'l	SOMEC	SOMAN	SOMAN	SOMAN	SOMAN	SOMAN
	LIDB Originating Point Code Establishment or Chang		OQT, OQU	NRPBX		33.33					15.20				
SIGNALING (CCS7)															
	CCS7 Signaling Termination, Per STP Port		UDB	PT8SX	147.60						15.20				
	CCS7 Signaling Usage, Per TCAP Message		UDB		0.000064										
	CCS7 Signaling Connection, Per link (A link		UDB	TPP++	15.77	34.50					15.20				
	CCS7 Signaling Connection, Per link (B link) (also known as D link		UDB	TPP++	15.77	34.50	34.50				15.20				
	CCS7 Signaling Usage, Per ISUP Message		UDB		0.000016										
	CCS7 Signaling Usage Surrogate, per link per LATA		UDB	STU56	732.10						15.20				
	CCS7 Signaling Point Code, per Originating Point Code Establishment or Change per STP affected		UDB	CCAPO		28.17	28.17				15.20				
	CCS7 Signaling Point Code, per Destination Point Code Establishment or Change Per Stp Affected		UDB	CCAPD		28.17	28.17				15.20				
E911 SERVICE															
	Local Channel - Dedicated - 2-wr Voice Grade - Zone 1				18.32	187.51	32.21				15.20				
	Local Channel - Dedicated - 2-wr Voice Grade - Zone 2				18.32	187.51	32.21				15.20				
	Local Channel - Dedicated - 2-wr Voice Grade - Zone 3				18.32	187.51	32.21				15.20				
	Interoffice Transport - Dedicated - 2-wr Voice Grade Per Mil				0.013										
	Interoffice Transport - Dedicated - 2-wr Voice Grade Per Facility Terminatic				22.60	39.36	26.62				15.20				
	Local Channel - Dedicated - DS1 - Zone 1				39.18	172.34	149.27				15.20				
	Local Channel - Dedicated - DS1 - Zone 2				121.58	172.34	149.27				15.20				
	Local Channel - Dedicated - DS1 - Zone 3				70.02	172.34	149.27				15.20				
	Interoffice Transport - Dedicated - DS1 Per Mil				0.2652										
	Interoffice Transport - Dedicated - DS1 Per Facility Terminatio				70.47	86.69	79.44				15.20				
CALLING NAME (CNAM) SERVICE															
	CNAM for DB Owners, Per Query		OQV		0.0010217										
	CNAM for Non DB Owners, Per Query		OQV		0.0010217										
	CNAM For DB Owners - Service Establishmen		OQV			22.29					15.20				
	CNAM For Non DB Owners - Service Establishmen		OQV			22.29					15.20				
	CNAM For DB Owners - Service Provisioning With Point Code Establishme		OQV			962.22	711.64				15.20				
	CNAM For Non DB Owners - Service Provisioning With Point Code Establishme		OQV			332.43	238.05				15.20				
	CNAM (Non-Databs Owner), NRC, applies when using the Character Based Use Interface (CHUI)		OQV	CDDCH		595.00	595.00				15.20				
LNP QUERY SERVICE															
	LNP Charge Per query				0.0008559										
	LNP Service Establishment Manua					12.16									
	LNP Service Provisioning with Point Code Establishmer					576.33	294.43								
	OPERATOR SERVICES AND DIRECTORY ASSISTANCE														
OPERATOR CALL PROCESSING															
	Oper. Call Processing - Oper. Provided, Per Min. - Using BST LID				1.20										
	Oper. Call Processing - Oper. Provided, Per Min. - Using Foreign LID				1.24										
	Oper. Call Processing - Fully Automated, per Call - Using BST LID				0.20										
	Oper. Call Processing - Fully Automated, per Call - Using Foreign LID				0.20										
INWARD OPERATOR SERVICES															
	Inward Operator Services - Verification, Per Minut				1.15										
	Inward Operator Services - Verification and Emergency Interrupt - Per Minut				1.15										
BRANDING - OPERATOR CALL PROCESSING															
	Recording of Custom Branded OA Announcemen			CBAOS		7,000.00	7,000.00				15.20				
	Loading of Custom Branded OA Announcement per shelf/NA			CBAOL		500.00	500.00				15.20				

CATEGORY	UNBUNDLED NETWORK ELEMENT	Zone	BCS	USOC	RATES ($)					OSS RATES ($)					
						Nonrecurring		Nonrecurring Disconnect		Svc Order Submitted Elec per LSR	Svc Order Submitted Manually per LSR	Incremental Charge - Manual Svc Order vs. Electronic-1st	Incremental Charge - Manual Svc Order vs. Electronic-Add'l	Incremental Charge - Manual Svc Order vs. Electronic-Disc 1st	Incremental Charge - Manual Svc Order vs. Electronic-Disc Add'l
					Rec	First	Add'l	First	Add'l	SOMEC	SOMAN	SOMAN	SOMAN	SOMAN	SOMAN
Unbranding via OLNS for UNEP CLEC															
	Loading of OA per OCN (Regional)					1,200.00	1,200.00								
DIRECTORY ASSISTANCE SERVICES															
DIRECTORY ASSISTANCE ACCESS SERVICE															
	Directory Assistance Access Service Calls, Charge Per Ca				0.25										
DIRECTORY ASSISTANCE CALL COMPLETION ACCESS SERVICE (DACC)															
	Directory Assistance Call Completion Access Service (DACC), Per Call Attem				0.10										
DIRECTORY TRANSPORT															
	SWA Common transport per Directory Assistance Access Service Ca				0.0003										
	SWA Common Transport per Directory Assistance Access Service Call Mi				0.00004										
	Access Tandem Switching per Directory Assistance Access Service Ca				0.00055										
	Directory Assistance Interconnection per Directory Assistance Access Service Ca				0.00										
	DS3 to DS1 Multiplexer per DA Access Service Ca				0.00018										
DIRECTORY ASSISTANCE DATA BASE SERVICE (DADS)															
	Directory Assistance Data Base Service Charge Per Listin				0.04										
	Directory Assistance Data Base Service, per mont			DBSOF	150.00										
BRANDING - DIRECTORY ASSISTANCE															
Facility Based CLEC															
	Recording and Provisioning of DA Custom Branded Announcemer		AMT	CBADA		6,000.00	6,000.00								
	Loading of Custom Branded Announcement per DRAM Card/Switc		AMT	CBADC		1,170.00	1,170.00								
UNEP CLEC															
	Recording of DA Custom Branded Announcemen					3,000.00	3,000.00								
	Loading of DA Custom Branded Announcement per DRAM Card/Switch per OCN					1,170.00	1,170.00								
Unbranding via OLNS for UNEP CLEC															
	Loading of DA per OCN (1 OCN per Order					420.00	420.00								
	Loading of DA per Switch per OCN					16.00	16.00								
SELECTIVE ROUTING															
	Selective Routing Per Unique Line Class Code Per Request Per Switc			USRCR		82.25	82.25				15.20				
VIRTUAL COLLOCATION															
	Virtual Collocation - 2-wire Cross Connects (loop		ueanl,uea,udn,udc,ual,uhl,ucl,ueq	UEAC2	0.0296	11.94	11.46								
	Virtual Collocation-2 Wire Cross Connects (Loop) for Line Splittin		UEPSR, UEPSB	VE1LS	0.0296	11.94	11.46	0.00	0.00		15.20				
	Virtual Collocation - 2-wire Cross Connect, Exchange Port 2-Wire Analog - Re		UEPSR	VE1R2	0.26	23.04	22.11					19.99	19.99	19.99	19.99
	Virtual Collocation 2-Wire Cross Connect, Exchange Port 2-Wire Voice Grade Re		UEPRX	PE1R2	0.26	23.04	22.11					19.99	19.99	19.99	19.99
	Virtual Collocation 2-Wire Cross Connect, Exchange Port 2-Wire Line Side PB Trunk - Bus		UEPSP	VE1R2	0.26	23.04	22.11					19.99	19.99	19.99	19.99
	Virtual Collocation 2-Wire Cross Connect, Exchange Port 2-Wire Voice Grade PB Trunk - Res		UEPSE	VE1R2	0.26	23.04	22.11					19.99	19.99	19.99	19.99
	Virtual Collocation 2-Wire Cross Connect, Exchange Port 2-Wire Analog Bu		UEPSB	VE1R2	0.26	23.04	22.11					19.99	19.99	19.99	19.99
	Virtual Collocation 2-Wire Cross Connect, Exchnage Port 2-Wire ISD		UEPSX	VE1R2	0.26	23.04	22.11					19.99	19.99	19.99	19.99
	Virtual Collocation 2-Wire Cross Connect, Exchange Port 2-Wire ISDI		UEPTX	VE1R2	0.26	23.04	22.11					19.99	19.99	19.99	19.99
	Virtual Collocation 4-Wire Cross Connect, Exchange Port DDITS 4-Wire DS		UEPDD	VE1R4	0.52	23.23	22.24					19.99	19.99	19.99	19.99
	Virtual Collocation 4-Wire Cross Connect, Exchange Port 4-Wire ISDN DS		UEPEX	VE1R4	0.52	23.23	22.24					19.99	19.99	19.99	19.99

CATEGORY		UNBUNDLED NETWORK ELEMENT	Zone	BCS	USOC	RATES ($)					OSS RATES ($)					
							Nonrecurring		Nonrecurring Disconnect		Svc Order Submitted Elec per LSR	Svc Order Submitted Manually per LSR	Incremental Charge - Manual Svc Order vs. Electronic-1st	Incremental Charge - Manual Svc Order vs. Electronic-Add'l	Incremental Charge - Manual Svc Order vs. Electronic-Disc 1st	Incremental Charge - Manual Svc Order vs. Electronic-Disc Add'l
						Rec	First	Add'l	First	Add'l	SOMEC	SOMAN	SOMAN	SOMAN	SOMAN	SOMAN
		Virtual Collocation - 4-wire Cross Connects (loop		uea,uhl, ucl,udl	UEAC4	0.0591	12.04	11.53								
		Virtual Collocation - 2-Fiber Cross Connects		CLO	CNC2F	2.65	20.29	14.76								
		Virtual Collocation - 4-Fiber Cross Connects		CLO	CNC4F	5.31	24.81	19.29								
		Virtual Collocatin - DS1 Cross Connects		USL,UL C,CLO	CNC1X	1.04	21.39	15.47								
		Virtual Collocation - Co-Carrier Cross Connects - Fiber Cable Support Structure, pe linear foot		AMTFS	PE1ES	0.0024										
		Virtual Collocation - Co-Carrier Cross Connects - Copper/Coax Cable Suppor Structure, per linear ft		AMTFS	PE1DS	0.0036										
		Virtual Collocation - Co-Carrier Cross Connects - Fiber Cable Support Structure,pe cable		AMTFS			534.79									
		Virtual Collocation - Co-Carrier Cross Connects - Copper/Coax Cable Suppor Structure, per cable		AMTFS			534.79									
AIN SELECTIVE CARRIER ROUTING																
		Regional Service Establishmen		SRC	SRCEC		100,209.33					15.20				
		End Office Establishmen		SRC	SRCEO		164.29	164.29				15.20				
		Query NRC, per query		SRC		0.0030293										
AIN - BELLSOUTH AIN SMS ACCESS SERVICE																
		AIN SMS Access Service - Service Establishment, Per State, Initial Setup			CAMSE		38.30	38.30				15.20				
		AIN SMS Access Service - Port Connection - Dial/Shared Access			CAMDP		7.60	7.60				15.20				
		AIN SMS Access Service - Port Connection - ISDN Access			CAM1P		7.60	7.60				15.20				
		AIN SMS Access Service - User Identification Codes - Per User ID Code			CAMAU		33.99	33.99				15.20				
		AIN SMS Access Service - Security Card, Per User ID Code, Initial or Replacement			CAMRC		41.39	41.39				15.20				
		AIN SMS Access Service - Storage, Per Unit (100 Kilobytes				0.0022										
		AIN SMS Access Service - Session, Per Minute				0.5795										
		AIN SMS Access Service - Company Performed Session, Per Minut				0.8104										
AIN - BELLSOUTH AIN TOOLKIT SERVICE																
		AIN Toolkit Service - Service Establishment Charge, Per State, Initial Setup			BAPSC		38.30	38.30				15.20				
		AIN Toolkit Service - Training Session, Per Custome			BAPVX		4,175.10	4,175.10				15.20				
		AIN Toolkit Service - Trigger Access Charge, Per Trigger, Per DN, Term. Attempt			BAPTT		7.60	7.60				15.20				
		AIN Toolkit Service - Trigger Access Charge, Per Trigger, Per DN, Off-Hook Delay			BAPTD		7.60	7.60				15.20				
		AIN Toolkit Service - Trigger Access Charge, Per Trigger, Per DN, Off-Hoo Immediate			BAPTM		7.60	7.60				15.20				
		AIN Toolkit Service - Trigger Access Charge, Per Trigger, Per DN, 10-Digit PODP			BAPTO		33.47	33.47				15.20				
		AIN Toolkit Service - Trigger Access Charge, Per Trigger, Per DN, CD			BAPTC		33.47	33.47				15.20				
		AIN Toolkit Service - Trigger Access Charge, Per Trigger, Per DN, Feature Code			BAPTF		33.47	33.47				15.20				
		AIN Toolkit Service - Query Charge, Per Query				0.0536446										
		AIN Toolkit Service - Type 1 Node Charge, Per AIN Toolkit Subscription, Per Node Per Query				0.006569										
		AIN Toolkit Service - SCP Storage Charge, Per SMS Access Account, Per 10(Kilobytes				0.06										
		AIN Toolkit Service - Monthly report - Per AIN Toolkit Service Subscription			BAPMS	10.90	7.60	7.60				15.20				
		AIN Toolkit Service - Special Study - Per AIN Toolkit Service Subscriptic			BAPLS	2.80	8.41	8.41				15.20				
		AIN Toolkit Service - Call Event Report - Per AIN Toolkit Service Subscription			BAPDS	8.20	7.60	7.60				15.20				

CATEGORY	UNBUNDLED NETWORK ELEMENT	Zone	BCS	USOC	RATES ($)					OSS RATES ($)					
						Nonrecurring		Nonrecurring Disconnect		Svc Order Submitted Elec per LSR	Svc Order Submitted Manually per LSR	Incremental Charge - Manual Svc Order vs. Electronic-1st	Incremental Charge - Manual Svc Order vs. Electronic-Add'l	Incremental Charge - Manual Svc Order vs. Electronic-Disc 1st	Incremental Charge - Manual Svc Order vs. Electronic-Disc Add'l
					Rec	First	Add'l	First	Add'l	SOMEC	SOMAN	SOMAN	SOMAN	SOMAN	SOMAN
	AIN Toolkit Service - Call Event Special Study - Per AIN Toolkit Service Subscription			BAPES	0.09	8.41	8.41				15.20				
ODUF/EDOUF/ADUF/CMDS															
	ACCESS DAILY USAGE FILE (ADUF)														
	ADUF: Message Processing, per message				0.007983										
	ADUF: Data Transmission (CONNECT:DIRECT), per messag				0.00012681										
	ENHANCED OPTIONAL DAILY USAGE FILE (EODUF)														
	EODUF: Message Processing, per message				0.250015										
	OPTIONAL DAILY USAGE FILE (ODUF)														
	ODUF: Recording, per message				0.0000117										
	ODUF: Message Processing, per message				0.004641										
	ODUF: Message Processing, per Magnetic Tape provisione				48.45										
	ODUF: Data Transmission (CONNECT:DIRECT), per messag				0.00010568										
ENHANCED EXTENDED LINK (EELs)															
	NOTE: New EELs available in State of Georgia, density zone 1 of following SMAs: Orlando, FL; Miami, FL; Ft. Lauderdale, FLl; Nashville, TN; New Orleans, LA;														
	NOTE: Charlotte-Gastonia-Rockhill, NC; Greensboro-Winston Salem-High Point, NC. Use all rates below except Switch As Is Charge.														
	NOTE: In all states, EEL network elements shown below also apply to currently combined facilities which are converted to UNE rates. A Switch As Is Charge applies to currently combined facilities converted to UNEs.(Non-recurring rates do not apply.)														
	NOTE: In GA, TN, KY, & LA, the EEL network elements apply to ordinarily combined network elements.(No Switch As Is Charge.)														
	2-WIRE VOICE GRADE EXTENDED LOOP WITH DEDICATED DS1 INTEROFFICE TRANSPORT (EEL)														
	First 2-Wire VG Loop(SL2) in a DS1 Interofficed Transport Combination - Zone	1	UNCVX	UEAL2	14.93	94.21	45.09				15.20				
	First 2-Wire VG Grade Loop(SL2) in a DS1 Interofficed Transport Combination Zone 2	2	UNCVX	UEAL2	25.35	94.21	45.09	0.00	0.00		15.20				
	First 2-Wire VG Grade Loop(SL2) in a DS1 Interofficed Transport Combination Zone 3	3	UNCVX	UEAL2	50.46	94.21	45.09	0.00	0.00		15.20				
	Interoffice Transport - Dedicated - DS1 combination - Per Mile per mont		UNC1X	1L5XX	0.2652										
	Interoffice Transport - Dedicated - DS1 combination - Facility Termination per mon		UNC1X	U1TF1	70.47	143.58	103.88				15.20				
	DS1 Channelization System Per Montl		UNC1X	MQ1	105.09	59.97	12.96				15.20				
	Voice Grade COCI - DS1 To Ds0 Interface - Per Month		UNCVX	1D1VG	0.6497	5.91	4.26								
	Each Additional 2-Wire VG Loop(SL 2) in the same DS1 Interoffice Transpo Combination - Zone 1	1	UNCVX	UEAL2	14.93	94.21	45.09	0.00	0.00		15.20				
	Each Additional 2-Wire VG Loop(SL2) in the same DS1 Interoffice Transpo Combination - Zone 2	2	UNCVX	UEAL2	25.35	94.21	45.09	0.00	0.00		15.20				
	Each Additional 2-Wire VG Loop(SL2) in the same DS1 Interoffice Transpo Combination - Zone 3	3	UNCVX	UEAL2	50.46	94.21	45.09	0.00	0.00		15.20				
	Voice Grade COCI - DS1 to DS0 Channel System combination - per mont		UNCVX	1D1VG	0.6497	5.91	4.26								
	Nonrecurring Currently Combined Network Elements Switch -As-Is Charg		UNC1X	UNCCC		5.43	5.43				15.20				
	4-WIRE VOICE GRADE EXTENDED LOOP WITH DEDICATED DS1 INTEROFFICE TRANSPORT (EEL)														
	First 4-Wire Analog Voice Grade Loop in a DS1 Interoffice Transport Combination Zone 1	1	UNCVX	UEAL4	30.81	94.21	45.09				15.20				
	First 4-Wire Analog Voice Grade Loop in a DS1 Interoffice Transport Combination Zone 2	2	UNCVX	UEAL4	38.32	94.21	45.09	0.00	0.00		15.20				
	First 4-Wire Analog Voice Grade Loop in a DS1 Interoffice Transport Combination Zone 3	3	UNCVX	UEAL4	60.39	94.21	45.09	0.00	0.00		15.20				
	Interoffice Transport - Dedicated - DS1 combination - Per Mile Per Mont		UNC1X	1L5XX	0.2652										
	Interoffice Transport - Dedicated - DS1 - Facility Termination Per Mont		UNC1X	U1TF1	70.47	143.58	103.88	0.00	0.00		15.20				
	Channelization - Channel System DS1 to DS0 combination Per Mont		UNC1X	MQ1	105.09	59.97	12.96	0.00	0.00						

CATEGORY		UNBUNDLED NETWORK ELEMENT	Zone	BCS	USOC	RATES ($)					OSS RATES ($)					
							Nonrecurring		Nonrecurring Disconnect		Svc Order Submitted Elec per LSR	Svc Order Submitted Manually per LSR	Incremental Charge - Manual Svc Order vs. Electronic-1st	Incremental Charge - Manual Svc Order vs. Electronic-Add'l	Incremental Charge - Manual Svc Order vs. Electronic-Disc 1st	Incremental Charge - Manual Svc Order vs. Electronic-Disc Add'l
						Rec	First	Add'l	First	Add'l	SOMEC	SOMAN	SOMAN	SOMAN	SOMAN	SOMAN
		Voice Grade COCI - DS1 to DS0 Channel System combination - per mont		UNCVX	1D1VG	0.6497	5.91	4.26								
		Additional 4-Wire Analog Voice Grade Loop in same DS1 Interoffice Transpo Combination - Zone 1	1	UNCVX	UEAL4	30.81	94.21	45.09	0.00	0.00		15.20				
		Additional 4-Wire Analog Voice Grade Loop in same DS1 Interoffice Transpo Combination - Zone 2	2	UNCVX	UEAL4	38.32	94.21	45.09	0.00			15.20				
		Additional 4-Wire Analog Voice Grade Loop in same DS1 Interoffice Transpo Combination - Zone 3	3	UNCVX	UEAL4	60.39	94.21	45.09	0.00	0.00		15.20				
		Voice Grade COCI - DS1 to DS0 Channel System combination - per mont		UNCVX	1D1VG	0.6497	5.91	4.26								
		Nonrecurring Currently Combined Network Elements Switch -As-Is Charg		UNC1X	UNCCC		5.43	5.43	0.00	0.00		15.20				
		4-WIRE 56 KBPS EXTENDED DIGITAL LOOP WITH DEDICATED DS1 INTEROFFICE TRANSPORT (EEL)														
		First 4-Wire 56Kbps Digital Grade Loop in a DS1 Interoffice Transport Combinatior Zone 1	1	UNCDX	UDL56	30.99	94.21	45.09				15.20				
		First 4-wire 56Kbps Digital Grade Loop in a DS1 Interoffice Transport Combination Zone 2	2	UNCDX	UDL56	36.78	94.21	45.09	0.00	0.00		15.20				
		First 4-Wire 56Kbps Digital Grade Loop in a DS1 Interoffice Transport Combinatior Zone 3	3	UNCDX	UDL56	38.92	94.21	45.09	0.00	0.00		15.20				
		Interoffice Transport - Dedicated - DS1 combination - Per Mile Per Mont		UNC1X	1L5XX	0.2652										
		Interoffice Transport - Dedicated - DS1 - combination Facility Termination Pe Month		UNC1X	U1TF1	70.47	143.58	103.88				15.20				
		Channelization - Channel System DS1 to DS0 combination Per Mont		UNC1X	MQ1	105.09	59.97	12.96	0.00	0.00						
		OCU-DP COCI (data) - DS1 to DS0 Channel System - per month (2.4-64kbs		UNCDX	1D1DD	1.38	5.91	4.26								
		Additional 4-Wire 56Kbps Digital Grade Loopin same DS1 Interoffice Transpo Combination - Zone 1	1	UNCDX	UDL56	30.99	94.21	45.09	0.00	0.00		15.20				
		Additional 4-Wire 56Kbps Digital Grade Loopin same DS1 Interoffice Transpo Combination - Zone 2	2	UNCDX	UDL56	36.78	193.82	92.77	82.08	12.22		15.20				
		Additional 4-Wire 56Kbps Digital Grade Loopin same DS1 Interoffice Transpo Combination - Zone 3	3	UNCDX	UDL56	38.92	193.82	92.77	82.08	12.22		15.20				
		OCU-DP COCI (data) - DS1 to DS0 Channel System - combination per month (2.4 64kbs)		UNCDX	1D1DD	1.38	5.91	4.26								
		Nonrecurring Currently Combined Network Elements Switch -As-Is Charg		UNC1X	UNCCC		5.43	5.43	0.00	0.00		15.20				
		4-WIRE 64 KBPS EXTENDED DIGITAL LOOP WITH DEDICATED DS1 INTEROFFICE TRANSPORT (EEL)														
		First 4-Wire 64Kbps Digital Grade Loop in a DS1 Interoffice Transport Combinatior Zone 1	1	UNCDX	UDL64	30.99	94.21	45.09	0.00	0.00		15.20				
		First 4-Wire 64Kbps Digital Grade Loop in a DS1 Interoffice Transport Combinatior Zone 2	2	UNCDX	UDL64	36.78	94.21	45.09	0.00	0.00		15.20				
		First 4-Wire 64Kbps Digital Grade Loop in a DS1 Interoffice Transport Combinatior Zone 3	3	UNCDX	UDL64	38.92	94.21	45.09	0.00	0.00		15.20				
		Interoffice Transport - Dedicated - DS1 combination - Per Mile Per Mont		UNC1X	1L5XX	0.2652										
		Interoffice Transport - Dedicated - DS1 combination - Facility Termination Pe Month		UNC1X	U1TF1	70.47	143.58	103.88	0.00	0.00		15.20				
		Channelization - Channel System DS1 to DS0 combination Per Mont		UNC1X	MQ1	105.09	59.97	12.96	0.00	0.00		15.20				
		OCU-DP COCI (data) - DS1 to DS0 Channel System combination - per month (2.4 64kbs)		UNCDX	1D1DD	1.38	5.91	4.26								
		Additional 4-Wire 64Kbps Digital Grade Loopin same DS1 Interoffice Transpo Combination - Zone 1	1	UNCDX	UDL64	30.99	94.21	45.09	0.00	0.00		15.20				
		Additional 4-Wire 64Kbps Digital Grade Loopin same DS1 Interoffice Transpo Combination - Zone 2	2	UNCDX	UDL64	36.78	94.21	45.09	0.00	0.00		15.20				
		Additional 4-Wire 64Kbps Digital Grade Loopin same DS1 Interoffice Transpo Combination - Zone 3	3	UNCDX	UDL64	38.92	94.21	45.09	0.00	0.00		15.20				
		OCU-DP COCI (data) - DS1 to DS0 Channel System combination - per month (2.4 64kbs)		UNCDX	1D1DD	1.38	5.91	4.26								
		Nonrecurring Currently Combined Network Elements Switch -As-Is Charg		UNC1X	UNCCC		5.43	5.43	0.00	0.00		15.20				
		4-WIRE DS1 DIGITAL EXTENDED LOOP WITH DEDICATED DS1 INTEROFFICE TRANSPORT (EEL)														
		4-Wire DS1 Digital Loop in Combination with DS1 Interoffice Transport - Zone	1	UNC1X	USLXX	85.70	169.22	100.89				15.20				
		4-Wire DS1 Digital Loop in Combination with DS1 Interoffice Transport - Zone	2	UNC1X	USLXX	194.96	169.22	100.89	0.00	0.00		15.20				
		4-Wire DS1 Digital Loop in Combination with DS1 Interoffice Transport - Zone	3	UNC1X	USLXX	491.94	169.22	100.89	0.00	0.00		15.20				

CATEGORY	UNBUNDLED NETWORK ELEMENT	Zone	BCS	USOC	RATES ($)					OSS RATES ($)					
						Nonrecurring		Nonrecurring Disconnect		Svc Order Submitted Elec per LSR	Svc Order Submitted Manually per LSR	Incremental Charge - Manual Svc Order vs. Electronic-1st	Incremental Charge - Manual Svc Order vs. Electronic-Add'l	Incremental Charge - Manual Svc Order vs. Electronic-Disc 1st	Incremental Charge - Manual Svc Order vs. Electronic-Disc Add'l
					Rec	First	Add'l	First	Add'l	SOMEC	SOMAN	SOMAN	SOMAN	SOMAN	SOMAN
	Interoffice Transport - Dedicated - DS1 combination - Per Mile Per Mont		UNC1X	1L5XX	0.2652										
	Interoffice Transport - Dedicated - DS1 combination - Facility Termination Pe Month		UNC1X	U1TF1	70.47	143.58	103.88				15.20				
	Nonrecurring Currently Combined Network Elements Switch -As-Is Charg		UNC1X	UNCCC		5.43	5.43	0.00	13.91		15.20				
4-WIRE DS1 DIGITAL EXTENDED LOOP WITH DEDICATED DS3 INTEROFFICE TRANSPORT (EEL)															
	First DS1Loop in DS3 Interoffice Transport Combination - Zone	1	UNC1X	USLXX	85.70	169.22	100.89				15.20				
	First DS1Loop in DS3 Interoffice Transport Combination - Zone	2	UNC1X	USLXX	194.96	169.22	100.89				15.20				
	First DS1Loop in DS3 Interoffice Transport Combination - Zone	3	UNC1X	USLXX	491.94	169.22	100.89				15.20				
	Interoffice Transport - Dedicated - DS3 combination - Per Mile Per Mont		UNC3X	1L5XX	6.04										
	Interoffice Transport - Dedicated - DS3 - Facility Termination per mont		UNC3X	U1TF3	850.45	296.68	121.16				15.20				
	DS3 to DS1 Channel System combination per montl		UNC3X	MQ3	201.48	107.05	48.07								
	DS3 Interface Unit (DS1 COCI) combination per month		UNC1X	UC1D1	11.78	5.91	4.26								
	Additional DS1Loop in DS3 Interoffice Transport Combination - Zone	1	UNC1X	USLXX	85.70	169.22	100.89	0.00	0.00		15.20				
	Additional DS1Loop in DS3 Interoffice Transport Combination - Zone	2	UNC1X	USLXX	194.96	169.22	100.89	0.00	0.00		15.20				
	Additional DS1Loop in DS3 Interoffice Transport Combination - Zone	3	UNC1X	USLXX	491.94	169.22	100.89	0.00	0.00		15.20				
	DS3 Interface Unit (DS1 COCI) combination per month		UNC1X	UC1D1	11.78	5.91	4.26								
	Nonrecurring Currently Combined Network Elements Switch -As-Is Charg		UNC3X	UNCCC		5.43	5.43	0.00	0.00		15.20				
2-WIRE VOICE GRADE EXTENDED LOOP/ 2 WIRE VOICE GRADE INTEROFFICE TRANSPORT (EEL)															
	2-WireVG Loop used with 2-wire VG Interoffice Transport Combination - Zone	1	UNCVX	UEAL2	14.93	94.21	45.09				15.20				
	2-WireVG Loop used with 2-wire VG Interoffice Transport Combination - Zone	2	UNCVX	UEAL2	25.35	94.21	45.09	0.00	0.00		15.20				
	2-WireVG Loop used with 2-wire VG Interoffice Transport Combination - Zone	3	UNCVX	UEAL2	50.46	94.21	45.09	0.00	0.00		15.20				
	Interoffice Transport - Dedicated - 2-wire VG combination - Per Mile Per Mont		UNCVX	1L5XX	0.013										
	Interoffice Transport - Dedicated - 2- Wire Voice Grade combination - Facilit Termination per month		UNCVX	U1TV2	22.60	72.60	41.75				15.20				
	Nonrecurring Currently Combined Network Elements Switch -As-Is Charg		UNCVX	UNCCC		5.43	5.43	0.00	0.00		15.20				
4-WIRE VOICE GRADE EXTENDED LOOP/ 4 WIRE VOICE GRADE INTEROFFICE TRANSPORT (EEL)															
	4-WireVG Loop used with 4-wire VG Interoffice Transport Combination - Zone	1	UNCVX	UEAL4	30.81	94.21	45.09				15.20				
	4-WireVG Loop used with 4-wire VG Interoffice Transport Combination - Zone	2	UNCVX	UEAL4	38.32	94.21	45.09	0.00	0.00		15.20				
	4-WireVG Loop used with 4-wire VG Interoffice Transport Combination - Zone	3	UNCVX	UEAL4	60.39	94.21	45.09	0.00	0.00		15.20				
	Interoffice Transport - Dedicated - 4-wire VG combination - Per Mile Per Mont		UNCVX	1L5XX	0.013										
	Interoffice Transport - Dedicated - 4- Wire Voice Grade combination - Facilit Termination per month		UNCVX	U1TV4	19.81	72.60	41.75				15.20				
	Nonrecurring Currently Combined Network Elements Switch -As-Is Charg		UNCVX	UNCCC		5.43	5.43	0.00	0.00		15.20				
DS3 DIGITAL EXTENDED LOOP WITH DEDICATED DS3 INTEROFFICE TRANSPORT (EEL)															
	High Capacity Unbundled Local Loop - DS3 combination - Per Mile per mont		UNC3X	1L5ND	10.04										
	High Capacity Unbundled Local Loop - DS3 combination - Facility Termination pe month		UNC3X	UE3PX	362.34	188.45	125.51								
	Interoffice Transport - Dedicated - DS3 - Per Mile per mont		UNC3X	1L5XX	6.04										
	Interoffice Transport - Dedicated - DS3 combination - Facility Termination per pe month		UNC3X	U1TF3	850.45	296.68	121.16				15.20				
	Nonrecurring Currently Combined Network Elements Switch -As-Is Charg		UNC3X	UNCCC		5.43	5.43	0.00	0.00		15.20				
STS1 DIGITAL EXTENDED LOOP WITH DEDICATED STS1 INTEROFFICE TRANSPORT (EEL)															
	High Capacity Unbundled Local Loop - STS1 combination - Per Mile per mont		UNCSX	1L5ND	10.04										
	High Capacity Unbundled Local Loop - STS1 combination - Facility Termination pe month		UNCSX	UDLS1	374.56	188.45	125.51								
	Interoffice Transport - Dedicated - STS1 combination - Per Mile per mont		UNCSX	1L5XX	6.04										
	Interoffice Transport - Dedicated - STS1 combination - Facility Termination pe month		UNCSX	U1TFS	830.19	296.68	121.16	0.00	0.00		15.20				

CATEGORY		UNBUNDLED NETWORK ELEMENT	Zone	BCS	USOC	RATES ($)					OSS RATES ($)					
							Nonrecurring		Nonrecurring Disconnect		Svc Order Submitted Elec per LSR	Svc Order Submitted Manually per LSR	Incremental Charge - Manual Svc Order vs. Electronic-1st	Incremental Charge - Manual Svc Order vs. Electronic-Add'l	Incremental Charge - Manual Svc Order vs. Electronic-Disc 1st	Incremental Charge - Manual Svc Order vs. Electronic-Disc Add'l
						Rec	First	Add'l	First	Add'l	SOMEC	SOMAN	SOMAN	SOMAN	SOMAN	SOMAN
		Nonrecurring Currently Combined Network Elements Switch -As-Is Charg		UNCSX	UNCCC		5.43	5.43	0.00	0.00		15.20				
		2-WIRE ISDN EXTENDED LOOP WITH DS1 INTEROFFICE TRANSPORT (EEL)														
		First 2-Wire ISDN Loop in a DS1 Interoffice Combination Transport - Zone	1	UNCNX	U1L2X	22.09	94.21	45.09				15.20				
		First 2-Wire ISDN Loop in a DS1 Interoffice Combination Transport - Zone	2	UNCNX	U1L2X	35.28	94.21	45.09	0.00	0.00		15.20				
		First 2-Wire ISDN Loop in a DS1 Interoffice Combination Transport - Zone	3	UNCNX	U1L2X	65.18	94.21	45.09	0.00	0.00		15.20				
		Interoffice Transport - Dedicated - DS1 combination - Per Mil		UNC1X	1L5XX	0.2652										
		Interoffice Transport - Dedicated - DS1 combintion - Facility Termination per mon		UNC1X	U1TF1	70.47	143.58	103.88	0.00	0.00		15.20				
		Channelization - Channel System DS1 to DS0 combination - per mont		UNC1X	MQ1	105.09	59.97	12.96	0.00	0.00						
		2-wire ISDN COCI (BRITE) - DS1 to DS0 Channel System combination - per mont		UNCNX	UC1CA	2.96	5.91	4.26								
		Additional 2-wire IDSN Loop in same DS1Interoffice Transport Combination - Zon 1	1	UNCNX	U1L2X	22.09	94.21	45.09	0.00	0.00		15.20				
		Additional 2-wire IDSN Loop in same DS1Interoffice Transport Combination - Zon 2	2	UNCNX	U1L2X	35.28	94.21	45.09	0.00	0.00		15.20				
		Additional 2-wire IDSN Loop in same DS1Interoffice Transport Combination - Zon 3	3	UNCNX	U1L2X	65.18	94.21	45.09	0.00	0.00		15.20				
		2-wire ISDN COCI (BRITE) - DS1 to DS0 Channel System combintaion- per mont		UNCNX	UC1CA	2.96	5.91	4.26								
		Nonrecurring Currently Combined Network Elements Switch -As-Is Charg		UNC1X	UNCCC		5.43	5.43	0.00	0.00		15.20				
		4-WIRE DS1 DIGITAL EXTENDED LOOP WITH DEDICATED STS-1 INTEROFFICE TRANSPORT (EEL)														
		First DS1 Loop in STS1 Interoffice Transport Combination - Zone	1	UNC1X	USLXX	85.70	169.22	100.89	0.00	0.00		15.20				
		First DS1 Loop in STS1 Interoffice Transport Combination - Zone	2	UNC1X	USLXX	194.96	169.22	100.89	0.00	0.00		15.20				
		First DS1 Loop in STS1 Interoffice Transport Combination - Zone	3	UNC1X	USLXX	491.94	169.22	100.89	0.00	0.00		15.20				
		Interoffice Transport - Dedicated - STS1 combination - Per Mile Per Mont		UNCSX	1L5XX	6.04										
		Interoffice Transport - Dedicated - STS1 combination - Facility Terminatic		UNCSX	U1TFS	830.19	296.68	121.16				15.20				
		STS1 to DS1 Channel System conbination per month		UNCSX	MQ3	201.48	107.05	48.07								
		DS3 Interface Unit (DS1 COCI) combination per month		UNC1X	UC1D1	11.78	5.91	4.26								
		Additional DS1Loop in STS1 Interoffice Transport Combination - Zone	1	UNC1X	USLXX	85.70	169.22	100.89	0.00	0.00		15.20				
		Additional DS1Loop in STS1 Interoffice Transport Combination - Zone	2	UNC1X	USLXX	194.96	169.22	100.89	0.00	0.00		15.20				
		Additional DS1Loop in STS1 Interoffice Transport Combination - Zone	3	UNC1X	USLXX	491.94	169.22	100.89	0.00	0.00		15.20				
		DS3 Interface Unit (DS1 COCI) combination per month		UNC1X	UC1D1	11.78	5.91	4.26								
		Nonrecurring Currently Combined Network Elements Switch -As-Is Charg		UNCSX	UNCCC		5.43	5.43	0.00	0.00		15.20				
		4-WIRE 56 KBPS DIGITAL EXTENDED LOOP WITH 56 KBPS INTEROFFICE TRANSPORT (EEL)														
		4-wire 56 kbps Loop/4-wire 56 kbps Interoffice Transport Combination - Zone	1	UNCDX	UDL56	30.99	94.21	45.09				15.20				
		4-wire 56 kbps Loop/4-wire 56 kbps Interoffice Transport Combination - Zone	2	UNCDX	UDL56	36.78	94.21	45.09	0.00	0.00		15.20				
		4-wire 56 kbps Loop/4-wire 56 kbps Interoffice Transport Combination - Zone	3	UNCDX	UDL56	38.92	94.21	45.09	0.00	0.00		15.20				
		Interoffice Transport - Dedicated - 4-wire 56 kbps combination - Per Mil		UNCDX	1L5XX	0.0130										
		Interoffice Transport - Dedicated - 4-wire 56 kbps combination - Facility Terminatic		UNCDX	U1TD5	15.61	72.60	41.75				15.20				
		Nonrecurring Currently Combined Network Elements Switch -As-Is Charg		UNCDX	UNCCC		5.43	5.43	0.00	0.00		15.20				
		4-WIRE 64 KBPS DIGITAL EXTENDED LOOP WITH 64 KBPS INTEROFFICE TRANSPORT (EEL)														
		4-wire 64 kbps Loop/4-wire 64 kbps Interoffice Transport Combination - Zone	1	UNCDX	UDL64	30.99	94.21	45.09				15.20				
		4-wire 64 kbps Loop/4-wire 64 kbps Interoffice Transport Combination - Zone	2	UNCDX	UDL64	36.78	94.21	45.09	0.00	0.00		15.20				
		4-wire 64 kbps Loop/4-wire 64 kbps Interoffice Transport Combination - Zone	3	UNCDX	UDL64	38.92	94.21	45.09	0.00	0.00		15.20				
		Interoffice Transport - Dedicated - 4-wire 64 kbps combination - Per Mil		UNCDX	1L5XX	0.0130										
		Interoffice Transport - Dedicated - 4-wire 64 kbps combination - Facility Terminatic		UNCDX	U1TD6	15.61	72.60	41.75				15.20				
		Nonrecurring Currently Combined Network Elements Switch -As-Is Charg		UNCDX	UNCCC		5.43	5.43	0.00	0.00		15.20				
ADDITIONAL NETWORK ELEMENTS																

CATEGORY	UNBUNDLED NETWORK ELEMENT	Zone	BCS	USOC	RATES ($)					OSS RATES ($)					
						Nonrecurring		Nonrecurring Disconnect		Svc Order Submitted Elec per LSR	Svc Order Submitted Manually per LSR	Incremental Charge - Manual Svc Order vs. Electronic-1st	Incremental Charge - Manual Svc Order vs. Electronic-Add'l	Incremental Charge - Manual Svc Order vs. Electronic-Disc 1st	Incremental Charge - Manual Svc Order vs. Electronic-Disc Add'l
					Rec	First	Add'l	First	Add'l	SOMEC	SOMAN	SOMAN	SOMAN	SOMAN	SOMAN
	When used as a part of a currently combined facility, the non-recurrng charges do not apply, but a Switch As Is charge does apply.														
	When used as ordinarilty combined network elements in Georgia, the non-recurring charges apply and the Switch As Is Charge does not.														
	Access to DCS - Customer Reconfiguration (FlexServ)														
	Node (SynchroNet)														
	Node per month		UNCDX	UNCNT	15.43										
	Nonrecurring Currently Combined Network Elements "Switch As Is" Charge (One applies to each combination)														
	2/4-Wire VG Interoffice Channel used in a COMBINATION - "Switch As Is Conversion Charge		UNCVX	UNCCC		5.43	5.43	0.00	0.00		15.20				
	56/64 kbps Interoffice Channel used in a COMBINATION - "Switch As Is Conversion Charge		UNCDX	UNCCC		5.43	5.43	0.00	0.00		15.20				
	DS1 Interoffice Channel used in a COMBINATION - "Switch As Is" Conversio Charge		UNC1X	UNCCC		5.43	5.43	0.00	0.00		15.20				
	DS3 Interoffice Channel used in a COMBINATION - "Switch As Is" Conversio Charge		UNC3X	UNCCC		5.43	5.43	0.00	0.00		15.20				
	STS1 Interoffice or Local Loop used in a COMBINATION - "Switch As Is Conversion Charge		UNCSX	UNCCC		5.43	5.43	0.00	0.00		15.20				
	NOTE: Local Channel - Dedicated Transport - minimum billing period - Below DS3=one month, DS3 and above=four months														
OPERATIONAL SUPPORT SYSTEMS															
	NOTE: (1) Electronic Service Order: CLEC-1 should contact its contract negotiator if it prefers the state specific electronic service ordering charges as ordered by the State Commissions														
	NOTE: (1) Continued: The electronic service ordering charge currently contained in this rate exhibit is the BellSouth regional electronic service ordering charge														
	NOTE: (1) Concluded: CLEC-1 may elect either the state specific Commission ordered rates for the electronic service ordering charges, or CLEC-1 may elect the regional electronic service ordering charge.														
	NOTE: (2) Manual Service Order charge: disconnect, in the state of Florida, to be billed on a per LSR basis														
	Electronic OSS Charge, per LSR, submitted via BST's OSS interactive interface (Regional)			SOMEC		3.50									
	The "Zone" shown in the sections for stand-alone loops or loops as part of a combination refers to Geographically Deaveraged UNE Zones. To view Geographically Deaveraged UNE Zone Designations by Central Office, refer to Internet Website: http://www.interconnection.bellsouth.com/become_a_clec/html/interconnection.htm														
UNBUNDLED LOCAL EXCHANGE SWITCHING(PORTS)															
	Exchange Ports														
	NOTE: Although the Port Rate includes all available features in GA, KY, LA & TN, the desired features will need to be ordered using retail USOCs														
	2-WIRE VOICE GRADE LINE PORT RATES (RES)														
	Exchange Ports - 2-Wire Analog Line Port- Res		UEPSR	UEPRL	1.52	2.31	2.21				15.20				
	Exchange Ports - 2-Wire Analog Line Port with Caller ID - Res		UEPSR	UEPRC	1.52	2.31	2.21				15.20				
	Exchange Ports - 2-Wire Analog Line Port outgoing only - Res		UEPSR	UEPRO	1.52	2.31	2.21				15.20				
	Exchange Ports - 2-Wire VG unbundled LA extended local dialing parity Port wit Caller ID - Res.		UEPSR	UEPAS	1.52	2.31	2.21				15.20				
	Exchange Ports - 2-Wire VG unbundled Louisiana Area Plus with Caller ID - Re (RUL)		UEPSR	UEPAG	1.52	2.31	2.21				15.20				
	Exchange Ports - 2-Wire VG unbundled res, low usage line port with Caller I (LUM)		UEPSR	UEPAP	1.52	2.31	2.21				15.20				

CATEGORY		UNBUNDLED NETWORK ELEMENT	Zone	BCS	USOC	RATES ($)					OSS RATES ($)					
							Nonrecurring		Nonrecurring Disconnect		Svc Order Submitted Elec per LSR	Svc Order Submitted Manually per LSR	Incremental Charge - Manual Svc Order vs. Electronic-1st	Incremental Charge - Manual Svc Order vs. Electronic-Add'l	Incremental Charge - Manual Svc Order vs. Electronic-Disc 1st	Incremental Charge - Manual Svc Order vs. Electronic-Disc Add'l
						Rec	First	Add'l	First	Add'l	SOMEC	SOMAN	SOMAN	SOMAN	SOMAN	SOMAN
		Subsequent Activity		UEPSR	USASC	0.00	0.00	0.00								
	FEATURES															
		All Available Vertical Features		UEPSR	UEPVF	0.00	0.00	0.00				15.20				
	2-WIRE VOICE GRADE LINE PORT RATES (BUS)															
		Exchange Ports - 2-Wire Analog Line Port without Caller ID - Bu		UEPSB	UEPBL	1.52	2.31	2.21				15.20				
		Exchange Ports - 2-Wire VG unbundled Line Port with unbundled port witl Caller+E484 ID - Bus.		UEPSB	UEPBC	1.52	2.31	2.21				15.20				
		Exchange Ports - 2-Wire Analog Line Port outgoing only - Bus		UEPSB	UEPBO	1.52	2.31	2.21				15.20				
		Exchange Ports - 2-Wire VG unbundled LA extended local dialing parity Port wit Caller ID - Bus.		UEPSB	UEPAX	1.52	2.31	2.21				15.20				
		Exhange Ports - 2-Wire VG unbundled incoming only port with Caller ID - Bu		UEPSB	UEPB1	1.52	2.31	2.21				15.20				
		Exchange Ports - 2-Wire VG unbundled Louisiana Bus Area Calling Port with Calle ID - Bus (BUC)		UEPSB	UEPAA	1.52	2.31	2.21				15.20				
		Subsequent Activity		UEPSB	USASC	0.00	0.00	0.00								
	FEATURES															
		All Available Vertical Features		UEPSB	UEPVF	0.00	0.00	0.00				15.20				
	EXCHANGE PORT RATES (DID & PBX)															
		Exchange Ports - 2-Wire DID Port		UEPEX	UEPP2	8.29	115.85	18.20				15.20				
		Exchange Ports - DDITS Port - 4-Wire DS1 Port with DID capabili		UEPDD	UEPDD	68.47	196.18	92.92				15.20				
		Exchange Ports - 2-Wire ISDN Port (See Notes below.		UEPTX UEPSX	U1PMA	10.07	70.76	51.46				15.20				
		All Features Offered		UEPTX UEPSX	UEPVF	0.00	0.00	0.00								
	NOTE: Transmission/usage charges associated with POTS circuit switched usage will also apply to circuit switched voice and/or circuit switched data transmission by B-Channels associated with 2-wire ISDN ports.															
	NOTE: Access to B Channel or D Channel Packet capabilities will be available only through BFR/New Business Request Process. Rates for the packet capabilities will be determined via the Bona Fide Request/New Business Request Process.															
		Exchange Ports - 2-Wire ISDN Port -- Channel Profiles		UEPTX UEPSX	U1UMA	0.00	0.00	0.00								
		Exchange Ports - 4-Wire ISDN DS1 Por		UEPEX	UEPEX	94.82	197.92	98.62				15.20				
		2-Wire VG Unbundled 2-Way PBX Trunk - Re		UEPSE	UEPRD	1.52	30.37	14.42				15.20				
		2-Wire VG Line Side Unbundled 2-Way PBX Trunk - Bu		UEPSP	UEPPC	1.52	30.37	14.42				15.20				
		2-Wire VG Line Side Unbundled Outward PBX Trunk - Bu		UEPSP	UEPPO	1.52	30.37	14.42				15.20				
		2-Wire VG Line Side Unbundled Incoming PBX Trunk - Bu		UEPSP	UEPP1	1.52	30.37	14.42				15.20				
		2-Wire Analog Long Distance Terminal PBX Trunk - Bu		UEPSP	UEPLD	1.52	30.37	14.42				15.20				
		2-Wire Voice Unbundled 2-Way PBX Louisiana Calling Po		UEPSP	UEPL2	1.52	30.37	14.42				15.20				
		2-Wire Voice Unbundled PBX LD Terminal Port		UEPSP	UEPLD	1.52	30.37	14.42				15.20				
		2-Wire Vice Unbundled 2-Way PBX Usage Poi		UEPSP	UEPXA	1.52	30.37	14.42				15.20				
		2-Wire Voice Unbundled PBX Toll Terminal Hotel Port		UEPSP	UEPXB	1.52	30.37	14.42				15.20				
		2-Wire Voice Unbundled PBX LD DDD Terminals Poi		UEPSP	UEPXC	1.52	30.37	14.42				15.20				
		2-Wire Voice Unbundled PBX LD Terminal Switchboard Po		UEPSP	UEPXD	1.52	30.37	14.42				15.20				
		2-Wire Voice Unbundled PBX LD Terminal Switchboard IDD Capable Po		UEPSP	UEPXE	1.52	30.37	14.42				15.20				
		2-Wire Voice Unbundled 2-Way PBX Louisiana Local Optional Callling Pc		UEPSP	UEPXK	1.52	30.37	14.42				15.20				
		2-Wire Voice Unbundled 2-Way PBX Hotel/Hospital Economy Administrative Callir Port		UEPSP	UEPXL	1.52	30.37	14.42				15.20				
		2-Wire Voice Unbundled 2-Way PBX Hotel/Hospital Economy Room Calling Pc		UEPSP	UEPXM	1.52	30.37	14.42				15.20				
		2-Wire Voice Unbundled 1-Way Outgoing PBX Hotel/Hospital Discount Roon Calling Port		UEPSP	UEPXO	1.52	30.37	14.42				15.20				
		2-Wire Voice Unbundled 1-Way Outgoing PBX Louisiana Local Discount Callin Port		UEPSP	UEPXP	1.52	30.37	14.42				15.20				
		2-Wire Voice Unbundled 1-Way Outgoing PBX Measured Po		UEPSP	UEPXS	1.52	30.37	14.42					18.14	8.06	8.94	8.94

CATEGORY	UNBUNDLED NETWORK ELEMENT	Zone	BCS	USOC	RATES ($)					OSS RATES ($)					
						Nonrecurring		Nonrecurring Disconnect		Svc Order Submitted Elec per LSR	Svc Order Submitted Manually per LSR	Incremental Charge - Manual Svc Order vs. Electronic-1st	Incremental Charge - Manual Svc Order vs. Electronic-Add'l	Incremental Charge - Manual Svc Order vs. Electronic-Disc 1st	Incremental Charge - Manual Svc Order vs. Electronic-Disc Add'l
					Rec	First	Add'l	First	Add'l	SOMEC	SOMAN	SOMAN	SOMAN	SOMAN	SOMAN
	Subsequent Activity		UEPSP	USASC	0.00	0.00	0.00								
	FEATURES														
	All Available Vertical Features		UEPSE	UEPVF	0.00	0.00	0.00				15.20				
	EXCHANGE PORT RATES (COIN)														
	Exchange Ports - Coin Port				1.52	2.31	2.21				15.20				
	NOTE: Transmission/usage charges associated with POTS circuit switched usage will also apply to circuit switched voice and/or circuit switched data transmission by B-Channels associated with 2-wire ISDN ports.														
	NOTE: Access to B Channel or D Channel Packet capabilities will be available only through BFR/New Business Request Process. Rates for the packet capabilities will be determined via the Bona Fide Request/New Business Request Process.														
UNBUNDLED LOCAL SWITCHING, PORT USAGE															
	End Office Switching (Port Usage)														
	End Office Switching Function, Per MOU				0.001868										
	End Office Trunk Port - Shared, Per MOU				0.00018										
	Tandem Switching (Port Usage) (Local or Access Tandem)														
	Tandem Switching Function Per MOU				0.0001067										
	Tandem Trunk Port - Shared, Per MOU				0.000222										
	Common Transport														
	Common Transport - Per Mile, Per MOU				0.0000032										
	Common Transport - Facilities Termination Per MOU				0.0003748										
UNBUNDLED PORT/LOOP COMBINATIONS - COST BASED RATES															
	Cost Based Rates are applied where BellSouth is required by FCC and/or State Commission rule to provide Unbundled Local Switching or Switch Ports.														
	Features shall apply to the Unbundled Port/Loop Combination - Cost Based Rate section in the same manner as they are applied to the Stand-Alone Unbundled Port section of this Rate Exhibit.														
	End Office and Tandem Switching Usage and Common Transport Usage rates in the Port section of this rate exhibit shall apply to all combinations of loop/port network elements except for UNE Coin Port/Loop Combinations.														
	For Georgia, Kentucky, Louisiana and Tennessee, the recurring UNE Port and Loop charges listed apply to Currently Combined and Not Currently Combined Combos and the first and additional Port nonrecurring charges apply to Not Currently Combined Combos. For Currently Combined Combos in GA, KY, LA, TN and all other states, the nonrecurring charges shall be those identified in the Nonrecurring - Currently Combined sections.														
	2-WIRE VOICE GRADE LOOP WITH 2-WIRE LINE PORT (RES														
	UNE Port/Loop Combination Rates														
	2-Wire VG Loop/Port Combo - Zone 1	1			13.13										
	2-Wire VG Loop/Port Combo - Zone 2	2			23.75										
	2-Wire VG Loop/Port Combo - Zone 3	3			49.62										
	UNE Loop Rates														
	2-Wire Voice Grade Loop (SL1) - Zone 1	1	UEPRX	UEPLX	11.77										
	2-Wire Voice Grade Loop (SL1) - Zone 2	2	UEPRX	UEPLX	22.39										
	2-Wire Voice Grade Loop (SL1) - Zone 3	3	UEPRX	UEPLX	48.26										
	2-Wire Voice Grade Line Port Rates (Res)														
	2-Wire voice unbundled port - residence		UEPRX	UEPRL	1.36	38.85	19.08				15.20				
	2-Wire voice unbundled port with Caller ID - re		UEPRX	UEPRC	1.36	38.85	19.08				15.20				
	2-Wire voice unbundled port outgoing only - re		UEPRX	UEPRO	1.36	38.85	19.08				15.20				
	2-Wire voice Grade unbundled Louisiana extended local dialing parity port wit Caller ID - res		UEPRX	UEPAS	1.36	38.85	19.08				15.20				
	2-Wire voice unbundled Louisiana Area Plus with Caller ID - res (RUI		UEPRX	UEPAG	1.36	38.85	19.08				15.20				
	2-Wire voice unbundles res, low usage line port with Caller ID (LUN		UEPRX	UEPAP	1.36	38.85	19.08				15.20				
	FEATURES														

CATEGORY	UNBUNDLED NETWORK ELEMENT	Zone	BCS	USOC	RATES ($)					OSS RATES ($)					
						Nonrecurring		Nonrecurring Disconnect		Svc Order Submitted Elec per LSR	Svc Order Submitted Manually per LSR	Incremental Charge - Manual Svc Order vs. Electronic-1st	Incremental Charge - Manual Svc Order vs. Electronic-Add'l	Incremental Charge - Manual Svc Order vs. Electronic-Disc 1st	Incremental Charge - Manual Svc Order vs. Electronic-Disc Add'l
					Rec	First	Add'l	First	Add'l	SOMEC	SOMAN	SOMAN	SOMAN	SOMAN	SOMAN
	All Features Offered		UEPRX	UEPVF	0.00	0.00	0.00				15.20				
LOCAL NUMBER PORTABILITY															
	Local Number Portability (1 per port		UEPRX	LNPCX	0.35										
NONRECURRING CHARGES (NRCs) - CURRENTLY COMBINED															
	2-Wire Voice Grade Loop / Line Port Combination - Conversion - Switch-as-		UEPRX	USAC2		0.10	0.10				15.20				
	2-Wire Voice Grade Loop / Line Port Combination - Conversion - Switch wit change		UEPRX	USACC		0.10	0.10				15.20				
	2-Wire Voice Grade Loop / Line Port Combination - Conversion - Subsequer Database Update					0.00					15.20				
ADDITIONAL NRCs															
	2-Wire Voice Grade Loop/Line Port Combination - Subsequent Activi		UEPRX	USAS2	0.00	0.00	0.00				15.20				
2-WIRE VOICE GRADE LOOP WITH 2-WIRE LINE PORT (BUS)															
UNE Port/Loop Combination Rates															
	2-Wire VG Loop/Port Combo - Zone 1	1			13.13										
	2-Wire VG Loop/Port Combo - Zone 2	2			23.75									20.00	
	2-Wire VG Loop/Port Combo - Zone 3	3			49.62										
UNE Loop Rates															
	2-Wire Voice Grade Loop (SL1) - Zone 1	1	UEPBX	UEPLX	11.77										
	2-Wire Voice Grade Loop (SL1) - Zone 2	2	UEPBX	UEPLX	22.39										
	2-Wire Voice Grade Loop (SL1) - Zone 3	3	UEPBX	UEPLX	48.26										
2-Wire Voice Grade Line Port (Bus)															
	2-Wire voice unbundled port without Caller ID - bu		UEPBX	UEPBL	1.36	38.85	19.08				15.20				
	2-Wire voice unbundled port with Caller + E484 ID - bu		UEPBX	UEPBC	1.36	38.85	19.08				15.20				
	2-Wire voice unbundled port outgoing only - bu		UEPBX	UEPBO	1.36	38.85	19.08				15.20				
	2-Wire voice Grade unbundled Louisiana extended local dialing parity port wit Caller ID - bus		UEPBX	UEPAX	1.36	38.85	19.08				15.20				
	2-Wire voice unbundled incoming only port with Caller ID - Bu		UEPBX	UPEB1	1.36	38.85	19.08				15.20				
	2-Wire voice unbundled Louisiana Bus Area Calling Port with Caller ID (BUC		UEPBX	UEPAA	1.36	38.85	19.08				15.20				
LOCAL NUMBER PORTABILITY															
	Local Number Portability (1 per port		UEPBX	LNPCX	0.35										
FEATURES															
	All Features Offered		UEPBX	UEPVF	0.00	0.00	0.00				15.20				
NONRECURRING CHARGES (NRCs) - CURRENTLY COMBINED															
	2-Wire Voice Grade Loop / Line Port Combination - Conversion - Switch-as-		UEPBX	USAC2		0.10	0.10				15.20				
	2-Wire Voice Grade Loop / Line Port Combination - Conversion - Switch wit change		UEPBX	USACC		0.10	0.10								
	2-Wire Voice Grade Loop / Line Port Combination - Conversion - Subsequer Database Update					0.00						5.12			
ADDITIONAL NRCs															
	2-Wire Voice Grade Loop/Line Port Combination - Subsequent Activi		UEPBX	USAS2								31.92	7.32		
2-WIRE VOICE GRADE LOOP WITH 2-WIRE LINE PORT (RES - PBX)															
UNE Port/Loop Combination Rates															
	2-Wire VG Loop/Port Combo - Zone 1	1			13.13										
	2-Wire VG Loop/Port Combo - Zone 2	2			23.75										
	2-Wire VG Loop/Port Combo - Zone 3	3			49.62										

CATEGORY	UNBUNDLED NETWORK ELEMENT	Zone	BCS	USOC	RATES ($)					OSS RATES ($)					
						Nonrecurring		Nonrecurring Disconnect		Svc Order Submitted Elec per LSR	Svc Order Submitted Manually per LSR	Incremental Charge - Manual Svc Order vs. Electronic-1st	Incremental Charge - Manual Svc Order vs. Electronic-Add'l	Incremental Charge - Manual Svc Order vs. Electronic-Disc 1st	Incremental Charge - Manual Svc Order vs. Electronic-Disc Add'l
					Rec	First	Add'l	First	Add'l	SOMEC	SOMAN	SOMAN	SOMAN	SOMAN	SOMAN
UNE Loop Rates															
	2-Wire Voice Grade Loop (SL 1) - Zone :	1	UEPRG	UEPLX	11.77										
	2-Wire Voice Grade Loop (SL 1) - Zone :	2	UEPRG	UEPLX	22.39										
	2-Wire Voice Grade Loop (SL 1) - Zone :	3	UEPRG	UEPLX	48.26										
2-Wire Voice Grade Line Port Rates (RES - PBX)															
	2-Wire VG Unbundled Combination 2-Way PBX Trunk Port - Re		UEPRG	UEPRD	1.36	66.91	31.29				15.20				
LOCAL NUMBER PORTABILITY															
	Local Number Portability (1 per port		UEPRG	LNPCP	3.50										
FEATURES															
	All Features Offered		UEPRG	UEPVF	0.00	0.00	0.00				15.20				
NONRECURRING CHARGES (NRCs) - CURRENTLY COMBINED															
	2-Wire Voice Grade Loop/ Line Port Combination (PBX) - Conversion - Switch-A Is		UEPRG	USAC2		7.68	1.85				15.20				
	2-Wire Voice Grade Loop/ Line Port Combination (PBX) - Conversion - Switch wit Change		UEPRG	USACC		7.68	1.85					31.92	7.32		
	2-Wire Voice Grade Loop / Line Port Combination - Conversion - Subsequer Database Update					0.00						5.12			
ADDITIONAL NRCs															
	2-Wire Voice Grade Loop/ Line Port Combination (PBX) - Subsequent Activi		UEPRG	USAS2	0.00	0.00	0.00					31.92	7.32		
	PBX Subsequent Activity - Change/Rearrange Multiline Hunt Grou					7.11	7.11					19.99	19.99	19.99	19.99
2-WIRE VOICE GRADE LOOP WITH 2-WIRE LINE PORT (BUS - PBX)															
UNE Port/Loop Combination Rates															
	2-Wire VG Loop/Port Combo - Zone :	1			13.13										
	2-Wire VG Loop/Port Combo - Zone :	2			23.75										
	2-Wire VG Loop/Port Combo - Zone :	3			49.62										
UNE Loop Rates															
	2-Wire Voice Grade Loop (SL 1) - Zone :	1	UEPPX	UEPLX	11.77										
	2-Wire Voice Grade Loop (SL 1) - Zone :	2	UEPPX	UEPLX	22.39										
	2-Wire Voice Grade Loop (SL 1) - Zone :	3	UEPPX	UEPLX	48.26										
2-Wire Voice Grade Line Port Rates (BUS - PBX)															
	Line Side Unbundled Combination 2-Way PBX Trunk Port - Bu		UEPPX	UEPPC	1.36	66.91	31.29				15.20				
	Line Side Unbundled Outward PBX Trunk Port - Bu		UEPPX	UEPPO	1.36	66.91	31.29				15.20				
	Line Side Unbundled Incoming PBX Trunk Port - Bu		UEPPX	UEPP1	1.36	66.91	31.29				15.20				
	2-Wire Voice Unbundled 2-Way Combination PBX Louisiana Calling Po		UEPPX	UEPL2	1.36	66.91	31.29				15.20				
	2-Wire Voice Unbundled PBX LD Terminal Port		UEPPX	UEPLD	1.36	66.91	31.29				15.20				
	2-Wire Voice Unbundled 2-Way Combination PBX Usage Po		UEPPX	UEPXA	1.36	66.91	31.29				15.20				
	2-Wire Voice Unbundled PBX Toll Terminal Hotel Port		UEPPX	UEPXB	1.36	66.91	31.29				15.20				
	2-Wire Voice Unbundled PBX LD DDD Terminals Po		UEPPX	UEPXC	1.36	66.91	31.29				15.20				
	2-Wire Voice Unbundled PBX LD Terminal Switchboard Po		UEPPX	UEPXD	1.36	66.91	31.29				15.20				
	2-Wire Voice Unbundled PBX LD Terminal Switchboard IDD Capable Po		UEPPX	UEPXE	1.36	66.91	31.29				15.20				
	2-Wire Voice Unbundled 2-Way PBX Louisiana Local Optional Calling Pc		UEPPX	UEPXK	1.36	66.91	31.29				15.20				

CATEGORY		UNBUNDLED NETWORK ELEMENT	Zone	BCS	USOC	RATES ($)					OSS RATES ($)					
							Nonrecurring		Nonrecurring Disconnect		Svc Order Submitted Elec per LSR	Svc Order Submitted Manually per LSR	Incremental Charge - Manual Svc Order vs. Electronic-1st	Incremental Charge - Manual Svc Order vs. Electronic-Add'l	Incremental Charge - Manual Svc Order vs. Electronic-Disc 1st	Incremental Charge - Manual Svc Order vs. Electronic-Disc Add'l
						Rec	First	Add'l	First	Add'l	SOMEC	SOMAN	SOMAN	SOMAN	SOMAN	SOMAN
		2-Wire Voice Unbundled 2-Way PBX Hotel/Hospital Economy Administrative Callir Port		UEPPX	UEPXL	1.36	66.91	31.29				15.20				
		2-Wire Voice Unbundled 2-Way PBX Hotel/Hospital Economy Room Calling Pc		UEPPX	UEPXM	1.36	66.91	31.29				15.20				
		2-Wire Voice Unbundled 1-Way Outgoing PBX Hotel/Hospital Discount Roor Calling Port		UEPPX	UEPXO	1.36	66.91	31.29				15.20				
		2-Wire Voice Unbundled 1-Way Outgoing PBX Louisiana Local Discount Callin Port		UEPPX	UEPXP	1.36	66.91	31.29				15.20				
		2-Wire Voice Unbundled 1-Way Outgoing PBX Measured Po		UEPPX	UEPXS	1.36	66.91	31.29				15.20	31.92	7.32		
	LOCAL NUMBER PORTABILITY															
		Local Number Portability (1 per port		UEPPX	LNPCP	3.15										
	FEATURES															
		All Features Offered		UEPPX	UEPVF	0.00	0.00	0.00				15.20				
	NONRECURRING CHARGES (NRCs) - CURRENTLY COMBINED															
		2-Wire Voice Grade Loop/ Line Port Combination (PBX) - Conversion - Switch-A Is		UEPPX	USAC2		7.68	1.85				15.20				
		2-Wire Voice Grade Loop/ Line Port Combination (PBX) - Conversion - Switch wit Change		UEPPX	USACC		7.68	1.85					31.92	7.32		
		2-Wire Voice Grade Loop / Line Port Combination - Conversion - Subsequer Database Update					0.00						5.12			
	ADDITIONAL NRCs															
		2-Wire Voice Grade Loop/ Line Port Combination (PBX) - Subsequent Activi		UEPPX	USAS2	0.00	0.00	0.00					31.92	7.32		
		PBX Subsequent Activity - Change/Rearrange Multiline Hunt Grou					7.11	7.11					19.99	19.99	19.99	19.99
	2-WIRE VOICE GRADE LOOP WITH 2-WIRE ANALOG LINE COIN PORT															
	UNE Port/Loop Combination Rates															
		2-Wire VG Coin Port/Loop Combo – Zone 1				13.13										
		2-Wire VG Coin Port/Loop Combo – Zone 2				23.75										
		2-Wire VG Coin Port/Loop Combo – Zone 3				49.62										
	UNE Loop Rates															
		2-Wire Voice Grade Loop (SL1) - Zone 1		UEPCO	UEPLX	11.77										
		2-Wire Voice Grade Loop (SL1) - Zone 2		UEPCO	UEPLX	22.39										
		2-Wire Voice Grade Loop (SL1) - Zone 3		UEPCO	UEPLX	48.26										
	2-Wire Voice Grade Line Ports (COIN)															
		2-Wire Coin 2-Way without Operator Screening and without Blocking (AL, KY, LA, MS)		UEPCO	UEPRF	1.36	38.85	19.08				15.20				
		2-Wire Coin 2-Way with Operator Screening and Blocking: 011, 900/976, 1+DDD (AL, KY, LA, MS)		UEPCO	UEPRA	1.36	38.85	19.08				15.20				
		2-Wire Coin 2-Way with Operator Screening and 011 Blocking (AL, LA, MS)		UEPCO	UEPRB	1.36	38.85	19.08				15.20				
		2-Wire Coin 2-Way with Operator Screening & Blocking: 900/976, 1+DDD, 011+, & Local (AL, KY, LA, MS)		UEPCO	UEPCD	1.36	38.85	19.08				15.20				
		2-Wire Coin Outward without Blocking and without Operator Screening (KY, LA, MS)		UEPCO	UEPRN	1.36	38.85	19.08				15.20				
		2-Wire Coin Outward with Operator Screening and 011 Blocking (LA)		UEPCO	UEPLA	1.36	38.85	19.08				15.20				
		2-Wire Coin Outward with Operator Screening and Blocking: 011, 900/976, 1+DDD (AL, KY, LA, MS)		UEPCO	UEPRH	1.36	38.85	19.08				15.20				
		2-Wire Coin Outward Operator Screening & Blocking: 900/976, 1+DDD, 011+, and Local (AL, KY, LA, MS)		UEPCO	UEPCN	1.36	38.85	19.08				15.20				
		2-Wire Coin 2-Way Smartline with 900/976 (Louisiana only)		UEPCO	UEPNA	1.36	38.85	19.08				15.20				

CATEGORY		UNBUNDLED NETWORK ELEMENT	Zone	BCS	USOC	RATES ($)					OSS RATES ($)					
							Nonrecurring		Nonrecurring Disconnect		Svc Order Submitted Elec per LSR	Svc Order Submitted Manually per LSR	Incremental Charge - Manual Svc Order vs. Electronic-1st	Incremental Charge - Manual Svc Order vs. Electronic-Add'l	Incremental Charge - Manual Svc Order vs. Electronic-Disc 1st	Incremental Charge - Manual Svc Order vs. Electronic-Disc Add'l
						Rec	First	Add'l	First	Add'l	SOMEC	SOMAN	SOMAN	SOMAN	SOMAN	SOMAN
		2-Wire Coin Outward Smartline with 900/976 (Louisiana only)		UEPCO	UEPCB	1.36	38.85	19.08				15.20				
	ADDITIONAL UNE COIN PORT/LOOP (RC)															
		UNE Coin Port/Loop Combo Usage (Flat Rate		UEPCO	URECU	1.81	0.00	0.00								
	LOCAL NUMBER PORTABILITY															
		Local Number Portability (1 per port		UEPCO	LNPCX	0.35										
	FEATURES															
	NONRECURRING CHARGES - CURRENTLY COMBINED															
		2-Wire Voice Grade Loop / Line Port Combination - Conversion - Switch-as-		UEPCO	USAC2		0.10	0.10				15.20				
		2-Wire Voice Grade Loop / Line Port Combination - Conversion - Switch wit change		UEPCO	USACC		0.10	0.10					31.92	7.32		
	ADDITIONAL NRCs															
		2-Wire Voice Grade Loop/Line Port Combination - Subsequent Activi		UEPCO	USAS2		0.00	0.00					31.92	7.32		
	2-WIRE VOICE GRADE LOOP- BUS ONLY - WITH 2-WIRE DID TRUNK PORT															
	UNE Port/Loop Combination Rates															
		2-Wire VG Loop/2-Wire DID Trunk Port Combo - UNE Zone	1			23.20										
		2-Wire VG Loop/2-Wire DID Trunk Port Combo - UNE Zone	2			33.62										
		2-Wire VG Loop/2-Wire DID Trunk Port Combo - UNE Zone	3			58.73										
	UNE Loop Rates															
		2-Wire Analog Voice Grade Loop - (SL2) - UNE Zone	1	UEPPX	UECD1	14.93	102.10	65.72				15.20				
		2-Wire Analog Voice Grade Loop - (SL2) - UNE Zone	2	UEPPX	UECD1	25.35	102.10	65.72				15.20				
		2-Wire Analog Voice Grade Loop - (SL2) - UNE Zone	3	UEPPX	UECD1	50.46	102.10	65.72				15.20				
	UNE Port Rate															
		Exchange Ports - 2-Wire DID Por		UEPPX	UEPD1	8.27	115.85	18.20				15.20				
	NONRECURRING CHARGES - CURRENTLY COMBINED															
		2-Wire Voice Grade Loop / 2-Wire DID Trunk Port Combination - Switch-as-		UEPPX	USAC1		7.10	1.81				15.20				
		2-Wire Voice Grade Loop / 2-Wire DID Trunk Port Conversion with BellSout Allowable Changes		UEPPX	USA1C		7.10	1.81				15.20				
	ADDITIONAL NRCs															
		2-Wire DID Subsequent Activity - Add Trunks, Per Trun		UEPPX	USAS1		26.01	26.01				15.20				
	Telephone Number/Trunk Group Establisment Charges															
		DID Trunk Termination (One Per Port		UEPPX	NDT	0.00	0.00	0.00				15.20				
		Additional DID Numbers for each Group of 20 DID Number		UEPPX	ND4	0.00	0.00	0.00				15.20				
		DID Numbers, Non- consecutive DID Numbers , Per Numbe		UEPPX	ND5	0.00	0.00	0.00				15.20				
		Reserve Non-Consecutive DID numbers		UEPPX	ND6	0.00	0.00	0.00				15.20				
		Reserve DID Numbers		UEPPX	NDV	0.00	0.00	0.00				15.20				
	LOCAL NUMBER PORTABILITY															
		Local Number Portability (1 per port		UEPPX	LNPCP	3.15										
	2-WIRE ISDN DIGITAL GRADE LOOP WITH 2-WIRE ISDN DIGITAL LINE SIDE PORT															
	UNE Port/Loop Combination Rates															
		2W ISDN Digital Grade Loop/2W ISDN Digital Line Side Port - UNE Zone	1	UEPPB UEPPR		27.48										

CATEGORY	UNBUNDLED NETWORK ELEMENT	Zone	BCS	USOC	RATES ($)					OSS RATES ($)					
						Nonrecurring		Nonrecurring Disconnect		Svc Order Submitted Elec per LSR	Svc Order Submitted Manually per LSR	Incremental Charge - Manual Svc Order vs. Electronic-1st	Incremental Charge - Manual Svc Order vs. Electronic-Add'l	Incremental Charge - Manual Svc Order vs. Electronic-Disc 1st	Incremental Charge - Manual Svc Order vs. Electronic-Disc Add'l
					Rec	First	Add'l	First	Add'l	SOMEC	SOMAN	SOMAN	SOMAN	SOMAN	SOMAN
	2W ISDN Digital Grade Loop/2W ISDN Digital Line Side Port - UNE Zone	2	UEPPB UEPPR		40.34										
	2W ISDN Digital Grade Loop/2W ISDN Digital Line Side Port - UNE Zone	3	UEPPB UEPPR		70.99										
UNE Loop Rates															
	2-Wire ISDN Digital Grade Loop - UNE Zone :	1	UEPPB UEPPR	USL2X	19.09	113.34	76.96				15.20				
	2-Wire ISDN Digital Grade Loop - UNE Zone :	2	UEPPB UEPPR	USL2X	31.95	113.34	76.96				15.20				
	2-Wire ISDN Digital Grade Loop - UNE Zone :	3	UEPPB UEPPR	USL2X	62.60	113.34	76.96				15.20				
UNE Port Rate															
	Exchange Port - 2-Wire ISDN Line Side Por		UEPPB UEPPR	UEPPB	8.39	70.76	51.46				15.20				
NONRECURRING CHARGES - CURRENTLY COMBINED															
	2-Wire ISDN Digital Grade Loop / 2-Wire ISDN Line Side Port Combination Conversion		UEPPB UEPPR	USACB	0.00	37.40	26.23				15.20				
ADDITIONAL NRCs															
LOCAL NUMBER PORTABILITY															
	Local Number Portability (1 per port		UEPPB UEPPR	LNPCX	0.35	0.00	0.00								
B-CHANNEL USER PROFILE ACCESS:															
	CVS/CSD (DMS/5ESS)		UEPPB UEPPR	U1UCA	0.00	0.00	0.00								
	CVS (EWSD)		UEPPB UEPPR	U1UCB	0.00	0.00	0.00								
	CSD		UEPPB UEPPR	U1UCC	0.00	0.00	0.00								
B-CHANNEL AREA PLUS USER PROFILE ACCESS: (AL,KY,LA,MS SC,MS, & TN)															
	CVS/CSD (DMS/5ESS)		UEPPB UEPPR	U1UCD	0.00	0.00	0.00								
	CVS (EWSD)		UEPPB UEPPR	U1UCE	0.00	0.00	0.00								
	CSD		UEPPB UEPPR	U1UCF	0.00	0.00	0.00								
USER TERMINAL PROFILE															
	User Terminal Profile (EWSD only		UEPPR	U1UMA	0.00	0.00	0.00								
VERTICAL FEATURES															
	All Vertical Features - One per Channel B User Profile		UEPPB UEPPR	UEPVF	0.00	0.00	0.00				15.20				
INTEROFFICE CHANNEL MILEAGE															
	Interoffice Channel mileage each, including first mile and facilities termination		UEPPB UEPPR	M1GNC	22.613	39.36	26.62				15.20				
	Interoffice Channel mileage each, additional mile		UEPPB UEPPR	M1GNM	0.013	0.00	0.00				15.20				
4-WIRE DS1 DIGITAL LOOP WITH 4-WIRE ISDN DS1 DIGITAL TRUNK PORT															
UNE Port/Loop Combination Rates															

CATEGORY	UNBUNDLED NETWORK ELEMENT	Zone	BCS	USOC	RATES ($)					OSS RATES ($)					
						Nonrecurring		Nonrecurring Disconnect		Svc Order Submitted Elec per LSR	Svc Order Submitted Manually per LSR	Incremental Charge - Manual Svc Order vs. Electronic-1st	Incremental Charge - Manual Svc Order vs. Electronic-Add'l	Incremental Charge - Manual Svc Order vs. Electronic-Disc 1st	Incremental Charge - Manual Svc Order vs. Electronic-Disc Add'l
					Rec	First	Add'l	First	Add'l	SOMEC	SOMAN	SOMAN	SOMAN	SOMAN	SOMAN
	4W DS1 Digital Loop/4W ISDN DS1 Digital Trunk Port - UNE Zone	1	UEPPP		180.52										
	4W DS1 Digital Loop/4W ISDN DS1 Digital Trunk Port - UNE Zone	2	UEPPP		289.78										
	4W DS1 Digital Loop/4W ISDN DS1 Digital Trunk Port - UNE Zone	3	UEPPP		586.76										
UNE Loop Rates															
	4-Wire DS1 Digital Loop - UNE Zone 1	1	UEPPP	USL4P	85.70	245.16	152.98				15.20				
	4-Wire DS1 Digital Loop - UNE Zone 2	2	UEPPP	USL4P	194.96	245.16	152.98				15.20				
	4-Wire DS1 Digital Loop - UNE Zone 3	3	UEPPP	USL4P	491.94	245.16	152.98				15.20				
UNE Port Rate															
	Exchange Ports - 4-Wire ISDN DS1 Por		UEPPP	UEPPP	94.82	197.92	98.62				15.20				
NONRECURRING CHARGES - CURRENTLY COMBINED															
	4-Wire DS1 Digital Loop / 4-Wire ISDN DS1 Digital Trunk Port Combination Conversion -Switch-as-is		UEPPP	USACP	0.00	115.63	76.29				15.20				
ADDITIONAL NRCs															
	4-Wire DS1 Loop/4-W ISDN Digtl Trk Port - Subsqt Actvy- Inward/two way tel no within Std Allowance		UEPPP	PR7TF		0.48					15.20				
	4-Wire DS1 Loop / 4-Wire ISDN DS1 Digital Trunk Port - Outward Tel Numbers (A States except NC)		UEPPP	PR7TO		11.18	11.18				15.20				
	4-Wire DS1 Loop / 4-Wire ISDN DS1 Digital Trk Port - Subsequent Inward Tel No Above Std Allowance		UEPPP	PR7ZT		22.35	22.35				15.20				
LOCAL NUMBER PORTABILITY															
	Local Number Portability (1 per port		UEPPP	LNPCN	1.75										
INTERFACE (Provsioning Only)															
	Voice/Data		UEPPP	PR71V	0.00	0.00	0.00								
	Digital Data		UEPPP	PR71D	0.00	0.00	0.00								
	Inward Data		UEPPP	PR71E	0.00	0.00	0.00								
New or Additional "B" Channel															
	New or Additional - Voice/Data B Channe		UEPPP	PR7BV	0.00	14.11					15.20				
	New or Additional - Digital Data B Channe		UEPPP	PR7BF	0.00	14.11					15.20				
	New or Additional Inward Data B Channe		UEPPP	PR7BD	0.00	14.11					15.20				
	New or Additional Useage Sensitive Voice Data B Channe		UEPPP	PR7BS	0.00	14.11					15.20				
	New or Additional Useage Sensitive Digital Data B Channe		UEPPP	PR7BU	0.00	14.11					15.20				
CALL TYPES															
	Inward		UEPPP	PR7C1	0.00	0.00	0.00								
	Outward		UEPPP	PR7C0	0.00	0.00	0.00								
	Two-way		UEPPP	PR7CC	0.00	0.00	0.00								
Interoffice Channel Mileage															
	Fixed Each Including First Mile		UEPPP	1LN1A	70.7352	86.69	79.44				15.20				
	Each Airline-Fractional Additional Mile		UEPPP	1LN1B	0.2652										
4-WIRE DS1 DIGITAL LOOP WITH 4-WIRE DDITS TRUNK PORT															
UNE Port/Loop Combination Rates															
	4W DS1 Digital Loop/4W DDITS Trunk Port - UNE Zone	1	UEPDC		154.17						15.20				
	4W DS1 Digital Loop/4W DDITS Trunk Port - UNE Zone	2	UEPDC		263.43						15.20				
	4W DS1 Digital Loop/4W DDITS Trunk Port - UNE Zone	3	UEPDC		560.41						15.20				
UNE Loop Rates															

CATEGORY	UNBUNDLED NETWORK ELEMENT	Zone	BCS	USOC	RATES ($)					OSS RATES ($)					
						Nonrecurring		Nonrecurring Disconnect		Svc Order Submitted Elec per LSR	Svc Order Submitted Manually per LSR	Incremental Charge - Manual Svc Order vs. Electronic-1st	Incremental Charge - Manual Svc Order vs. Electronic-Add'l	Incremental Charge - Manual Svc Order vs. Electronic-Disc 1st	Incremental Charge - Manual Svc Order vs. Electronic-Disc Add'l
					Rec	First	Add'l	First	Add'l	SOMEC	SOMAN	SOMAN	SOMAN	SOMAN	SOMAN
	4-Wire DS1 Digital Loop - UNE Zone 1	1	UEPDC	USLDC	85.70	245.16	152.98				15.20				
	4-Wire DS1 Digital Loop - UNE Zone 2	2	UEPDC	USLDC	194.96	245.16	152.98				15.20				
	4-Wire DS1 Digital Loop - UNE Zone 3	3	UEPDC	USLDC	491.94	245.16	152.98				15.20				
UNE Port Rate															
	4-Wire DDITS Digital Trunk Por		UEPDC	UDD1T	68.47	196.18	92.92				15.20				
NONRECURRING CHARGES - CURRENTLY COMBINED															
	4-Wire DS1 Digital Loop / 4-Wire DDITS Trunk Port Combination - Switch-as-		UEPDC	USAC4		125.75	65.08				15.20				
	4-Wire DS1 Digital Loop / 4-Wire DDITS Trunk Port Combination - Conversion wit DS1 Changes		UEPDC	USAWA		125.75	65.08				15.20				
	4-Wire DS1 Digital Loop / 4-Wire DDITS Trunk Port Combination - Conversion wit Change - Trunk		UEPDC	USAWB		125.75	65.08				15.20				
ADDITIONAL NRCs															
	4-Wire DS1 Loop / 4-Wire DDITS Trunk Port - NRC - Subsequent Channe Activation/Chan - 2-Way Trunk		UEPDC	UDTTA		14.06	14.06				15.20				
	4-Wire DS1 Loop / 4-Wire DDITS Trunk Port - Subsequent Channel Activation/Cha - 1-Way Outward Trunk		UEPDC	UDTTB		14.06	14.06				15.20				
	4-Wire DS1 Loop / 4-Wire DDITS Trunk Port - Subsqnt Channel Activation/Char Inward Trunk w/out DID		UEPDC	UDTTC		14.06	14.06				15.20				
	4-Wire DS1 Loop / 4-Wire DDITS Trunk Port - Subsqnt Chan Activation Per Chan Inward Trunk with DID		UEPDC	UDTTD		14.06	14.06				15.20				
	4-Wire DS1 Loop / 4-Wire DDITS Trunk Port - Subsqnt Chan Activation / Chan - Way DID w User Trans		UEPDC	UDTTE		14.06	14.06				15.20				
BIPOLAR 8 ZERO SUBSTITUTION															
	B8ZS -Superframe Format		UEPDC	CCOSF		0.00	605.00				15.20				
	B8ZS - Extended Superframe Format		UEPDC	CCOEF		0.00	605.00				15.20				
Alternate Mark Inversion															
	AMI -Superframe Format		UEPDC	MCOSF		0.00	0.00								
	AMI - Extended SuperFrame Forma		UEPDC	MCOPO		0.00	0.00								
Telephone Number/Trunk Group Establisment Charges															
	Telephone Number for 2-Way Trunk Grou		UEPDC	UDTGX	0.00						15.20				
	Telephone Number for 1-Way Outward Trunk Grou		UEPDC	UDTGY	0.00						15.20				
	Telephone Number for 1-Way Inward Trunk Group Without DI		UEPDC	UDTGZ	0.00						15.20				
	DID Numbers for each Group of 20 DID Numbers		UEPDC	ND4	0.00						15.20				
	DID Numbers, Non- consecutive DID Numbers , Per Numbe		UEPDC	ND5	0.00						15.20				
	Reserve Non-Consecutive DID Nos		UEPDC	ND6	0.00	0.00	0.00				15.20				
	Reserve DID Numbers		UEPDC	NDV	0.00	0.00	0.00				15.20				
Dedicated DS1 (Interoffice Channel Mileage) - FX/FCO for 4-Wire DS1 Digital Loop with 4-Wire DDITS Trunk Port															

CATEGORY		UNBUNDLED NETWORK ELEMENT	Zone	BCS	USOC	RATES ($)					OSS RATES ($)					
							Nonrecurring		Nonrecurring Disconnect		Svc Order Submitted Elec per LSR	Svc Order Submitted Manually per LSR	Incremental Charge - Manual Svc Order vs. Electronic-1st	Incremental Charge - Manual Svc Order vs. Electronic-Add'l	Incremental Charge - Manual Svc Order vs. Electronic-Disc 1st	Incremental Charge - Manual Svc Order vs. Electronic-Disc Add'l
						Rec	First	Add'l	First	Add'l	SOMEC	SOMAN	SOMAN	SOMAN	SOMAN	SOMAN
		Interoffice Channel Mileage - Fixed rate 0-8 miles (Facilities Terminatio		UEPDC	1LNO1	70.47	86.69	79.44				15.20				
		Interoffice Channel Mileage - Additional rate per mile - 0-8 mile		UEPDC	1LNOA	0.2652	0.00	0.00								
		Interoffice Channel Mileage - Fixed rate 9-25 miles (Facilities Terminatio		UEPDC	1LNO2	0.00	0.00	0.00								
		Interoffice Channel Mileage - Additional rate per mile - 9-25 mile		UEPDC	1LNOB	0.2652	0.00	0.00								
		Interoffice Channel Mileage - Fixed rate 25+ miles (Facilities Terminatio		UEPDC	1LNO3	0.00	0.00	0.00	0.00							
		Interoffice Channel Mileage - Additional rate per mile - 25+ mile		UEPDC	1LNOC	0.2652	0.00	0.00								
		Local Number Portability, per DS0 Activate		UEPDC	LNPCP	3.15	0.00	0.00	0.00							
		Central Office Termininating Poin		UEPDC	CTG	0.00										
	4-WIRE DS1 LOOP WITH CHANNELIZATION WITH PORT															
	System is 1 DS1 Loop, 1 D4 Channel Bank, and up to 24 Feature Activations															
	Each System can have up to 24 combinations of rates depending on type and number of ports used															
	UNE DS1 Loop															
		4-Wire DS1 Loop - UNE Zone 1	1	UEPMG	USLDC	85.70	0.00	0.00				15.20				
		4-Wire DS1 Loop - UNE Zone 2	2	UEPMG	USLDC	194.96	0.00	0.00				15.20				
		4-Wire DS1 Loop - UNE Zone 3	3	UEPMG	USLDC	491.94	0.00	0.00				15.20				
	UNE DSO Channelization Capacities (D4 Channel Bank Configurations)															
		24 DSO Channel Capacity - 1 per DS1		UEPMG	VUM24	97.35	0.00	0.00				15.20				
		48 DSO Channel Capacity - 1 per 2 DS1s		UEPMG	VUM48	194.70	0.00	0.00				15.20				
		96 DSO Channel Capacity -1per 4 DS1s		UEPMG	VUM96	389.40	0.00	0.00				15.20				
		144 DS0 Channel Capacity - 1 per 6 DS1s		UEPMG	VUM14	584.10	0.00	0.00				15.20				
		192 DS0 Channel Capacity -1 per 8 DS1s		UEPMG	VUM19	778.80	0.00	0.00				15.20				
		240 DS0 Channel Capacity - 1 per 10 DS1s		UEPMG	VUM20	973.50	0.00	0.00				15.20				
		288 DS0 Channel Capacity - 1 per 12 DS1s		UEPMG	VUM28	1,168.20	0.00	0.00				15.20				
		384 DS0 Channel Capacity - 1 per 16 DS1s		UEPMG	VUM38	1,557.60	0.00	0.00				15.20				
		480 DS0 Channel Capacity - 1 per 20 DS1s		UEPMG	VUM40	1,947.00	0.00	0.00				15.20				
		576 DS0 Channel Capacity -1 per 24 DS1s		UEPMG	VUM57	2,336.40	0.00	0.00				15.20				
		672 DS0 Channel Capacity - 1 per 28 DS1s		UEPMG	VUM67	2,725.80	0.00	0.00				15.20				
	Non-Recurring Charges (NRC) Associated with 4-Wire DS1 Loop with Channeliztion with Port - Conversion Charge Based on a System															
	A Minimum System configuration is One (1) DS1, One (1) D4 Channel Bank, and Up To 24 DSO Ports with Feature Activations.															
	Multiples of this configuration functioning as one are considered Add'l after the minimum system configuration is counted.															
		NRC - Conversion (Currently Combined) with or without BellSouth Allowed Change		UEPMG	USAC4	0.00	146.13	8.12				15.20				
	System Additions at End User Locations Where 4-Wire DS1 Loop with Channelization with Port Combination Currently Exists and															
	New (Not Currently Combined) In Georgia & Tennessee Only															
		1 DS1/D4 Channel Bank - Add NRC for each Port and Assoc Fea Activation - New GA, LA, KY &TN Only		UEPMG	VUMD4	0.00	715.54	467.54				15.20				
	Bipolar 8 Zero Substitution															
		Clear Channel Capability Format, superframe - Subsequent Activity Only		UEPMG	CCOSF	0.00	0.00	605.00				15.20				

CATEGORY	UNBUNDLED NETWORK ELEMENT	Zone	BCS	USOC	RATES ($)					OSS RATES ($)					
						Nonrecurring		Nonrecurring Disconnect		Svc Order Submitted Elec per LSR	Svc Order Submitted Manually per LSR	Incremental Charge - Manual Svc Order vs. Electronic-1st	Incremental Charge - Manual Svc Order vs. Electronic-Add'l	Incremental Charge - Manual Svc Order vs. Electronic-Disc 1st	Incremental Charge - Manual Svc Order vs. Electronic-Disc Add'l
					Rec	First	Add'l	First	Add'l	SOMEC	SOMAN	SOMAN	SOMAN	SOMAN	SOMAN
	Clear Channel Capability Format - Extended Superframe - Subsequent Activity Only		UEPMG	CCOEF	0.00	0.00	605.00				15.20				
	Alternate Mark Inversion (AMI)														
	Superframe Format		UEPMG	MCOSF	0.00	0.00	0.00								
	Extended Superframe Format		UEPMG	MCOPO	0.00	0.00	0.00								
	Exchange Ports Associated with 4-Wire DS1 Loop with Channelization with Port														
	Exchange Ports														
	Line Side Combination Channelized PBX Trunk Port - Business		UEPPX	UEPCX	1.52	0.00	0.00	0.00	0.00		15.20				
	Line Side Outward Channelized PBX Trunk Port - Business		UEPPX	UEPOX	1.52	0.00	0.00	0.00	0.00		15.20				
	Line Side Inward Only Channelized PBX Trunk Port without DID		UEPPX	UEP1X	1.52	0.00	0.00	0.00	0.00		15.20				
	2-Wire Trunk Side Unbundled Channelized DID Trunk Port		UEPPX	UEPDM	8.29	0.00	0.00	0.00	0.00		15.20				
	Feature Activations - Unbundled Loop Concentration														
	Feature (Service) Activation for each Line Side Port Terminated in D4 Bank		UEPPX	1PQWM	0.6497	25.36	13.40				15.20				
	Feature (Service) Activation for each Trunk Side Port Terminated in D4 Bank		UEPPX	1PQWU	0.6497	78.05	18.40				15.20				
	Telephone Number/ Group Establishment Charges for DID Service														
	DID Trunk Termination (1 per Port)		UEPPX	NDT	0.00						15.20				
	DID Numbers - groups of 20 - Valid all States		UEPPX	ND4	0.00	0.00	0.00				15.20				
	Non-Consecutive DID Numbers - per number		UEPPX	ND5	0.00	0.00	0.00				15.20				
	Reserve Non-Consecutive DID Numbers		UEPPX	ND6	0.00	0.00	0.00				15.20				
	Reserve DID Numbers		UEPPX	NDV	0.00	0.00	0.00				15.20				
	Local Number Portability														
	Local Number Portability - 1 per port		UEPPX	LNPCP	3.15	0.00	0.00								
	FEATURES - Vertical and Optional														
	Local Switching Features Offered with Line Side Ports Only														
	All Features Available		UEPPX	UEPVF	0.00	0.00	0.00				15.20				
UNBUNDLED PORT LOOP COMBINATIONS - MARKET RATES															
	Market Rates shall apply where BellSouth is not required to provide unbundled local switching or switch ports per FCC and/or State Commission rules.														
	These scenarios include:														
	1. Unbundled port/loop combinations that are Not Currently Combined in all of the BellSouth states except as noted for Georgia, Kentucky, Louisiana and Tennessee.														
	2. Unbundled port/loop combinations that are Currently Combined or Not Currently Combined in Zone 1 of the Top 8 MSAS in BellSouth's region for end users with 4 or more DS0 equivalent lines.														
	The Top 8 MSAs in BellSouth's region are: FL (Orlando, Ft. Lauderdale, Miami); GA (Atlanta); LA (New Orleans); NC (Greensboro-Winston Salem-Highpoint/Charlotte-Gastonia-Rock Hill); TN (Nashville).														
	BellSouth currently is developing the billing capability to mechanically bill the recurring and non-recurring Market Rates in this section. In the interim, BellSouth shall bill the rates in the Cost-Based section preceding in lieu of the Market Rates and reserves the right to true-up the billing difference.														
	The Market Rate for unbundled ports includes all available features in all states.														
	End Office and Tandem Switching Usage and Common Transport Usage rates in the Port section of this rate exhibit shall apply to all combinations of loop/port network elements except for UNE Coin Port/Loop Combinations which have a flat rate usage charge (USOC: URECU).														
	For Not Currently Combined scenarios where Market Rates apply, the Nonrecurring charges are listed in the First and Additional NRC columns for each Port USOC. For Currently Combined scenarios, the Nonrecurring charges are listed in the N Currently Combined section. Additional NRCs may apply also and are categorized accordingly.														

CATEGORY	UNBUNDLED NETWORK ELEMENT	Zone	BCS	USOC	RATES ($)					OSS RATES ($)					
						Nonrecurring		Nonrecurring Disconnect		Svc Order Submitted Elec per LSR	Svc Order Submitted Manually per LSR	Incremental Charge - Manual Svc Order vs. Electronic-1st	Incremental Charge - Manual Svc Order vs. Electronic-Add'l	Incremental Charge - Manual Svc Order vs. Electronic-Disc 1st	Incremental Charge - Manual Svc Order vs. Electronic-Disc Add'l
					Rec	First	Add'l	First	Add'l	SOMEC	SOMAN	SOMAN	SOMAN	SOMAN	SOMAN
2-WIRE VOICE GRADE LOOP WITH 2-WIRE LINE PORT (RES)															
UNE Port/Loop Combination Rates															
	2-Wire VG Loop/Port Combo - Zone 1	1			25.77										
	2-Wire VG Loop/Port Combo - Zone 2	2			36.39										
	2-Wire VG Loop/Port Combo - Zone 3	3			62.26										
UNE Loop Rates															
	2-Wire Voice Grade Loop (SL1) - Zone 1	1	UEPRX	UEPLX	11.77										
	2-Wire Voice Grade Loop (SL1) - Zone 2	2	UEPRX	UEPLX	22.39										
	2-Wire Voice Grade Loop (SL1) - Zone 3	3	UEPRX	UEPLX	48.26										
2-Wire Voice Grade Line Port (Res)															
	2-Wire voice unbundled port - residenc		UEPRX	UEPRL	14.00	90.00	90.00					31.92	7.32		
	2-Wire voice unbundled port with Caller ID - re		UEPRX	UEPRC	14.00	90.00	90.00					31.92	7.32		
	2-Wire voice unbundled port outgoing only - re		UEPRX	UEPRO	14.00	90.00	90.00					31.92	7.32		
	2-Wire voice Grade unbundled Louisiana extended local dialing parity port wit Caller ID - res		UEPRX	UEPAS	14.00	90.00	90.00					31.92	7.32		
	2-Wire voice unbundled Louisiana Area Plus with Caller ID - res (RUI		UEPRX	UEPAG	14.00	90.00	90.00					31.92	7.32		
	2-Wire voice unbundled Louisiana Area Plus with Caller ID - res (AC		UEPRX	UEPAH	14.00	90.00	90.00					31.92	7.32		
	2-Wire voice unbundles res, low usage line port with Caller ID (LUN		UEPRX	UEPAP	14.00	90.00	90.00					31.92	7.32		
LOCAL NUMBER PORTABILITY															
	Local Number Portability (1 per port		UEPRX	LNPCX	0.35										
FEATURES															
	All Features Offered		UEPRX	UEPVF	0.00	0.00	0.00								
	2-Wire Voice Grade Loop / Line Port Combination - Switch-as-i		UEPRX	USAC2		41.50	41.50					31.92	7.32		
	2-Wire Voice Grade Loop / Line Port Combination - Switch with chang		UEPRX	USACC		41.50	41.50								
ADDITIONAL NRCs															
	NRC - 2-Wire Voice Grade Loop/Line Port Combination - Subsequer		UEPRX	USAS2		0.00	0.00					31.92	7.32		
2-WIRE VOICE GRADE LOOP WITH 2-WIRE LINE PORT (BUS)															
UNE Port/Loop Combination Rates															
	2-Wire VG Loop/Port Combo - Zone 1	1			25.77										
	2-Wire VG Loop/Port Combo - Zone 2	2			36.39										
	2-Wire VG Loop/Port Combo - Zone 3	3			62.26										
UNE Loop Rates															
	2-Wire Voice Grade Loop (SL1) - Zone 1	1	UEPBX	UEPLX	11.77										
	2-Wire Voice Grade Loop (SL1) - Zone 2	2	UEPBX	UEPLX	22.39										
	2-Wire Voice Grade Loop (SL1) - Zone 3	3	UEPBX	UEPLX	48.26										
2-Wire Voice Grade Line Port (Bus)															
	2-Wire voice unbundled port without Caller ID - bu		UEPBX	UEPBL	14.00	90.00	90.00					31.92	7.32		
	2-Wire voice unbundled port with Caller + E484 ID - bu		UEPBX	UEPBC	14.00	90.00	90.00					31.92	7.32		
	2-Wire voice unbundled port outgoing only - bu		UEPBX	UEPBO	14.00	90.00	90.00					31.92	7.32		
	2-Wire voice Grade unbundled Louisiana extended local dialing parity port wit Caller ID - bus		UEPBX	UEPAX	14.00	90.00	90.00					31.92	7.32		
	2-Wire voice unbundled Louisiana Bus Area Calling Port with Caller ID (BUC		UEPBX	UEPAA	14.00	90.00	90.00					31.92	7.32		

CATEGORY	UNBUNDLED NETWORK ELEMENT	Zone	BCS	USOC	RATES ($)					OSS RATES ($)					
						Nonrecurring		Nonrecurring Disconnect		Svc Order Submitted Elec per LSR	Svc Order Submitted Manually per LSR	Incremental Charge - Manual Svc Order vs. Electronic-1st	Incremental Charge - Manual Svc Order vs. Electronic-Add'l	Incremental Charge - Manual Svc Order vs. Electronic-Disc 1st	Incremental Charge - Manual Svc Order vs. Electronic-Disc Add'l
					Rec	First	Add'l	First	Add'l	SOMEC	SOMAN	SOMAN	SOMAN	SOMAN	SOMAN
	LOCAL NUMBER PORTABILITY														
	Local Number Portability (1 per port		UEPBX	LNPCX	0.35										
	FEATURES														
	NONRECURRING CHARGES - CURRENTLY COMBINED														
	2-Wire Voice Grade Loop / Line Port Combination - Switch-as-i		UEPBX	USAC2		41.50	41.50					31.92	7.32		
	2-Wire Voice Grade Loop / Line Port Combination - Switch with chang		UEPBX	USACC		41.50	41.50								
	ADDITIONAL NRCs														
	NRC - 2-Wire Voice Grade Loop/Line Port Combination - Subsequer		UEPBX	USAS2		0.00	0.00					31.92	7.32		
	2-WIRE VOICE GRADE LOOP WITH 2-WIRE LINE PORT (RES - PBX)														
	UNE Port/Loop Combination Rates														
	2-Wire VG Loop/Port Combo - Zone 1	1			25.77										
	2-Wire VG Loop/Port Combo - Zone 2	2			36.39										
	2-Wire VG Loop/Port Combo - Zone 3	3			62.26										
	UNE Loop Rates														
	2-Wire Voice Grade Loop (SL1) - Zone 1	1	UEPRG	UEPLX	11.77										
	2-Wire Voice Grade Loop (SL1) - Zone 2	2	UEPRG	UEPLX	22.39										
	2-Wire Voice Grade Loop (SL1) - Zone 3	3	UEPRG	UEPLX	48.26										
	2-Wire Voice Grade Line Port Rates (RES - PBX)														
	2-Wire VG Unbundled Combination 2-Way PBX Trunk Port - Re		UEPRG	UEPRD	14.00	90.00	90.00					31.92	7.32		
	LOCAL NUMBER PORTABILITY														
	Local Number Portability (1 per port		UEPRG	LNPCP	3.15										
	FEATURES														
	NONRECURRING CHARGES - CURRENTLY COMBINED														
	2-Wire Voice Grade Loop/ Line Port Combination - Switch-As-I		UEPRG	USAC2		41.50	41.50					31.92	7.32		
	2-Wire Voice Grade Loop/ Line Port Combination - Switch with Chang		UEPRG	USACC		41.50	41.50								
	ADDITIONAL NRCs														
	2 Wire Loop/Line Side Port Combination - Non feature - Subsequent Activity Nonrecurring					0.00	0.00								
	PBX Subsequent Activity - Change/Rearrange Multiline Hunt Grou					14.64	14.64					19.99	19.99	19.99	19.99
	2-WIRE VOICE GRADE LOOP WITH 2-WIRE LINE PORT (BUS - PBX)														
	UNE Port/Loop Combination Rates														
	2-Wire VG Loop/Port Combo - Zone 1	1			25.77										
	2-Wire VG Loop/Port Combo - Zone 2	2			36.39										
	2-Wire VG Loop/Port Combo - Zone 3	3			62.26										
	UNE Loop Rates														
	2-Wire Voice Grade Loop (SL1) - Zone 1	1	UEPPX	UEPLX	11.77										
	2-Wire Voice Grade Loop (SL1) - Zone 2	2	UEPPX	UEPLX	22.39										
	2-Wire Voice Grade Loop (SL1) - Zone 3	3	UEPPX	UEPLX	48.26										
	2-Wire Voice Grade Line Port Rates (BUS - PBX)														

CATEGORY		UNBUNDLED NETWORK ELEMENT	Zone	BCS	USOC	RATES ($)					OSS RATES ($)					
							Nonrecurring		Nonrecurring Disconnect		Svc Order Submitted Elec per LSR	Svc Order Submitted Manually per LSR	Incremental Charge - Manual Svc Order vs. Electronic-1st	Incremental Charge - Manual Svc Order vs. Electronic-Add'l	Incremental Charge - Manual Svc Order vs. Electronic-Disc 1st	Incremental Charge - Manual Svc Order vs. Electronic-Disc Add'l
						Rec	First	Add'l	First	Add'l	SOMEC	SOMAN	SOMAN	SOMAN	SOMAN	SOMAN
		Line Side Unbundled Combination 2-Way PBX Trunk Port - Bu		UEPPX	UEPPC	14.00	90.00	90.00					31.92	7.32		
		Line Side Unbundled Outward PBX Trunk Port - Bu		UEPPX	UEPPO	14.00	90.00	90.00					31.92	7.32		
		Line Side Unbundled Incoming PBX Trunk Port - Bu		UEPPX	UEPP1	14.00	90.00	90.00					31.92	7.32		
		2-Wire Voice Unbundled 2-Way Combination PBX Louisiana Calling Po		UEPPX	UEPL2	14.00	90.00	90.00					31.92	7.32		
		2-Wire Voice Unbundled PBX LD Terminal Port		UEPPX	UEPLD	14.00	90.00	90.00					31.92	7.32		
		2-Wire Voice Unbundled 2-Way Combination PBX Usage Po		UEPPX	UEPXA	14.00	90.00	90.00					31.92	7.32		
		2-Wire Voice Unbundled PBX Toll Terminal Hotel Port		UEPPX	UEPXB	14.00	90.00	90.00					31.92	7.32		
		2-Wire Voice Unbundled PBX LD DDD Terminals Poi		UEPPX	UEPXC	14.00	90.00	90.00					31.92	7.32		
		2-Wire Voice Unbundled PBX LD Terminal Switchboard Po		UEPPX	UEPXD	14.00	90.00	90.00					31.92	7.32		
		2-Wire Voice Unbundled PBX LD Terminal Switchboard IDD Capable Po		UEPPX	UEPXE	14.00	90.00	90.00					31.92	7.32		
		2-Wire Voice Unbundled 2-Way PBX Louisiana Local Optional Calling Pc		UEPPX	UEPXK	14.00	90.00	90.00					31.92	7.32		
		2-Wire Voice Unbundled 2-Way PBX Hotel/Hospital Economy Administrative Callir Port		UEPPX	UEPXL	14.00	90.00	90.00					31.92	7.32		
		2-Wire Voice Unbundled 2-Way PBX Hotel/Hospital Economy Room Calling Pc		UEPPX	UEPXM	14.00	90.00	90.00					31.92	7.32		
		2-Wire Voice Unbundled 1-Way Outgoing PBX Hotel/Hospital Discount Roon Calling Port		UEPPX	UEPXO	14.00	90.00	90.00					31.92	7.32		
		2-Wire Voice Unbundled 1-Way Outgoing PBX Louisiana Local Discount Callin Port		UEPPX	UEPXP	14.00	90.00	90.00					31.92	7.32		
		2-Wire Voice Unbundled 1-Way Outgoing PBX Measured Po		UEPPX	UEPXS	14.00	90.00	90.00					31.92	7.32		
	LOCAL NUMBER PORTABILITY															
		Local Number Portability (1 per port		UEPPX	LNPCP	3.15										
	FEATURES															
	NONRECURRING CHARGES - CURRENTLY COMBINED															
		2-Wire Voice Grade Loop/ Line Port Combination - Switch-As-I		UEPPX	USAC2		41.50	41.50					31.92	7.32		
		2-Wire Voice Grade Loop/ Line Port Combination - Switch with Chang		UEPPX	USACC		41.50	41.50								
	ADDITIONAL NRCs															
		2-Wire Voice Grade Loop/ Line Port Combination - Subsequer		UEPPX	USAS2		0.00	0.00					31.92	7.32		
		2 Wire Loop/Line Side Port Combination - Non feature - Subsequent Activity Nonrecurring					0.00	0.00								
		PBX Subsequent Activity - Change/Rearrange Multiline Hunt Grou					14.64	14.64					19.99	19.99	19.99	19.99
	2-WIRE VOICE GRADE LOOP WITH 2-WIRE ANALOG LINE COIN PORT															
	UNE Port/Loop Combination Rates															
		2-Wire VG Coin Port/Loop Combo – Zone :				25.77										
		2-Wire VG Coin Port/Loop Combo – Zone :				36.39										
		2-Wire VG Coin Port/Loop Combo – Zone :				62.26										
	UNE Loop Rates															
		2-Wire Voice Grade Loop (SL1) - Zone :		UEPCO	UEPLX	11.77										
		2-Wire Voice Grade Loop (SL1) - Zone :		UEPCO	UEPLX	22.39										
		2-Wire Voice Grade Loop (SL1) - Zone :		UEPCO	UEPLX	48.26										
	2-Wire Voice Grade Line Port Rates (Coin)															
		2-Wire Coin 2-Way without Operator Screening and without Blocking (AL, KY, LA, MS)		UEPCO	UEPRF	14.00	90.00	90.00					31.92	7.32		
		2-Wire Coin 2-Way with Operator Screening and Blocking: 011, 900/976, 1+DDD (AL, KY, LA, MS, SC)		UEPCO	UEPRA	14.00	90.00	90.00					31.92	7.32		
		2-Wire Coin 2-Way with Operator Screening and 011 Blocking (AL, LA, MS)		UEPCO	UEPRB	14.00	90.00	90.00					31.92	7.32		

CATEGORY		UNBUNDLED NETWORK ELEMENT	Zone	BCS	USOC	RATES ($)					OSS RATES ($)					
							Nonrecurring		Nonrecurring Disconnect		Svc Order Submitted Elec per LSR	Svc Order Submitted Manually per LSR	Incremental Charge - Manual Svc Order vs. Electronic-1st	Incremental Charge - Manual Svc Order vs. Electronic-Add'l	Incremental Charge - Manual Svc Order vs. Electronic-Disc 1st	Incremental Charge - Manual Svc Order vs. Electronic-Disc Add'l
						Rec	First	Add'l	First	Add'l	SOMEC	SOMAN	SOMAN	SOMAN	SOMAN	SOMAN
		2-Wire Coin 2-Way with Operator Screening & Blocking: 900/976, 1+DDD, 011+, & Local (AL, KY, LA, MS)		UEPCO	UEPCD	14.00	90.00	90.00					31.92	7.32		
		2-Wire Coin Outward without Blocking and without Operator Screening (KY, LA, MS)		UEPCO	UEPRN	14.00	90.00	90.00					31.92	7.32		
		2-Wire Coin Outward with Operator Screening and 011 Blocking (LA)		UEPCO	UEPLA	14.00	90.00	90.00					31.92	7.32		
		2-Wire Coin Outward with Operator Screening and Blocking: 011, 900/976, 1+DDD (AL, KY, LA, MS)		UEPCO	UEPRH	14.00	90.00	90.00					31.92	7.32		
		2-Wire Coin Outward Operator Screening & Blocking: 900/976, 1+DDD, 011+, & Local (AL, KY, LA, MS)		UEPCO	UEPCN	14.00	90.00	90.00					31.92	7.32		
	LOCAL NUMBER PORTABILITY															
		Local Number Portability (1 per port		UEPCO	LNPCX	0.35										
	NONRECURRING CHARGES - CURRENTLY COMBINED															
		2-Wire Voice Grade Loop/ Line Port Combination - Switch-As-Is		UEPCO	USAC2		41.50	41.50					31.92	7.32		
		2-Wire Voice Grade Loop/ Line Port Combination - Switch with Chang		UEPCO	USACC		41.50	41.50								
	ADDITIONAL NRCs															
		2-Wire Voice Grade Loop/ Line Port Combination - Subsequer		UEPCO	USAS2		0.00	0.00					31.92	7.32		
	NOTE: If no rate is identified in the contract, the rates for the specific service or function will be as set forth in applicable BellSouth tariff or as negotiated by the Parties upon request by either Party.															

LOCAL INTERCONNECTION
Louisiana

CATEGORY	NOTES	LOCAL INTERCONNECTION	Interim	Zone	BCS	USOC	RATES ($) Rec	Nonrecurring First	Nonrecurring Add'l	Nonrecurring Disconnect First	Nonrecurring Disconnect Add'l	OSS RATES ($) Svc Order Submitted Elec per LSR SOMEC	Svc Order Submitted Manually per LSR SOMAN	Incremental Charge - Manual Svc Order vs. Electronic-1st SOMAN	Incremental Charge - Manual Svc Order vs. Electronic-Add'l SOMAN	Incremental Charge - Manual Svc Order vs. Electronic-Disc 1st SOMAN	Incremental Charge - Manual Svc Order vs. Electronic-Disc Add'l SOMAN
LOCAL INTERCONNECTION (CALL TRANSPORT AND TERMINATION)																	
	END OFFICE SWITCHING																
		End Office Switching Function, Per MOU			OHD		$0.002048										
	TANDEM SWITCHING																
		Tandem Switching Function Per MOU			OHD		$0.0005507										
		Multiple Tandem Switching, per MOU (applies to intial tandem only)			OHD		$0.0005507										
	TRUNK CHARGE																
		Installation Trunk Side Service - per DS0			OHD	TPP++		334.94	56.98								
		Dedicated End Office Trunk Port Service-per DS0**			OHD	TDE0P	0.00										
		Dedicated End Office Trunk Port Service-per DS1**			0H1 OH1MS	TDE1P	0.00										
		Dedicated Tandem Trunk Port Service-per DS0**			OHD	TDW0P	0.00										
		Dedicated Tandem Trunk Port Service-per DS1**			OH1 OH1MS	TDW1P	0.00										
	** This rate element is recovered on a per MOU basis and is included in the End Office Switching and Tandem Switching, per MOU rate elements																
LOCAL INTERCONNECTION (TRANSPORT)																	
	COMMON TRANSPORT (Shared)																
		Common Transport - Per Mile, Per MOU			OHD		$0.0000032										
		Common Transport - Facilities Termination Per MOU			OHD		$0.0003748										
	INTEROFFICE CHANNEL - DEDICATED TRANSPORT - VOICE GRADE																
		Interoffice Channel - Dedicated Transport - 2 Wire Voice Grade - Per Mile per month			OHL, OHN	1L5NF	0.013										
		Interoffice Channel - Dedicated Transport- 2 Wire Voice Grade - Facility Termination per month			OHL, OHN	1L5NF	22.60	39.36	26.62								
	INTEROFFICE CHANNEL - DEDICATED TRANSPORT - 56/64 KBPS																
		Interoffice Channel - Dedicated Transport - 56 kbps - per mile per month			OHL, OHN	1L5NK	0.013										
		Interoffice Channel - Dedicated Transport - 56 kbps - Facility Termination per month			OHL, OHN	1L5NK	15.61	39.37	26.62								
		Interoffice Channel - Dedicated Transport - 64 kbps - per mile per month			OHL, OHN	1L5NK	0.013										
		Interoffice Channel - Dedicated Transport - 64 kbps - Facility Termination per month			OHL, OHN	1L5NK	15.61	39.37	26.62	0.00	0.00						
	INTEROFFICE CHANNEL - DEDICATED TRANSPORT - DS1																
		Interoffice Channel - Dedicated Channel - DS1 - Per Mile per month			OH1 OH1M	1L5NL	0.2652										
		Interoffice Channel - Dedicated Tranport - DS1 - Facility Termination per month			OH1 OH1M	1L5NL	70.47	86.69	79.44								
	INTEROFFICE CHANNEL - DEDICATED TRANSPORT- DS3																
		Interoffice Channel - Dedicated Transport - DS3 Per Mile per month			OH3 OH3M	1L5NM	6.04										

LOCAL INTERCONNECTION
Louisiana

CATEGORY	NOTES	LOCAL INTERCONNECTION	Interim	Zone	BCS	USOC	RATES ($) Nonrecurring Rec	Nonrecurring First	Nonrecurring Add'l	Nonrecurring Disconnect First	Nonrecurring Disconnect Add'l	OSS RATES ($) Svc Order Submitted Elec per LSR SOMEC	Svc Order Submitted Manually per LSR SOMAN	Incremental Charge - Manual Svc Order vs. Electronic-1st SOMAN	Incremental Charge - Manual Svc Order vs. Electronic-Add'l SOMAN	Incremental Charge - Manual Svc Order vs. Electronic-Disc 1st SOMAN	Incremental Charge - Manual Svc Order vs. Electronic-Disc Add'l SOMAN
		Interoffice Channel - Dedicated Transport - DS3 Facility Termination per month			OH3 OH3M	1L5NM	850.45	270.69	158.05								
	LOCAL CHANNEL - DEDICATED TRANSPORT																
		Local Channel - Dedicated - 2-Wire Voice Grade per month			OHL OHN	TEFV2	18.32	187.51	32.21								
		Local Channel - Dedicated - 4-Wire Voice Grade per month			OHL OHN	TEFV4	19.41	187.94	32.63								
		Local Channel - Dedicated - DS1 per month			OH1	TEFHG	39.18	172.34	149.27								
		Local Channel - Dedicated - DS3 Facility Termination per month			OH3	TEFHJ	469.44	438.46	256.30								
	LOCAL INTERCONNECTION MID-SPAN MEET																
	NOTE: If Access service ride Mid-Span Meet, one-half the tariffed service Local Channel rate is applicable.																
	MULTIPLEXERS																
		Channelization - DS1 to DS0 Channel System			OH1 OH1M	SATN1	105.09	88.41	60.76								
		DS3 to DS1 Channel System per month			OH3 OH3MS	SATNS	201.48	172.99	91.25								
		DS3 Interface Unit (DS1 COCI) per month			OH1 OH1MS	SATCO	11.78	6.39	4.58								
	Notes: If no rate is identified in the contract, the rates, terms and conditions for the specific service or function will be as set forth in applicable BellSouth tariff.																

SERVICE PROVIDER NUMBER PORTABILITY
Louisiana

CATEGORY	NOTES	UNBUNDLED NETWORK ELEMENT	Interim Indicator	Zone	BCS	USOC	RATES ($) Nonrecurring Rec	Nonrecurring First	Nonrecurring Add'l	Nonrecurring Disconnect First	Nonrecurring Disconnect Add'l	OSS RATES ($) Svc Order Submitted Elec per LSR SOMEC	Svc Order Submitted Manually per LSR SOMAN	Incremental Charge - Manual Svc Order vs. Electronic-1st SOMAN	Incremental Charge - Manual Svc Order vs. Electronic-Add'l SOMAN	Incremental Charge - Manual Svc Order vs. Electronic-Disc 1st SOMAN	Incremental Charge - Manual Svc Order vs. Electronic-Disc Add'l SOMAN
INTERIM SERVICE PROVIDER NUMBER PORTABILITY - RCI																	
		RCF, per number ported (Business Line				TNPBL	2.91	0.25									
		RCF, per number ported (Residence Line				TNPRL	2.91	0.25									
		RCF, add' l capacity for simultaneous call forwarding, p additional path					1.24										
		RCF, per service order, per location (Business				TNPBD		2.02	2.02	2.01	2.01	3.50		19.99	19.99	19.99	19.99
		RCF, per service order, per location (Residence				TNPRD		2.02	2.02	2.01	2.01	3.50		19.99	19.99	19.99	19.99
INTERIM SERVICE PROVIDER NUMBER PORTABILITY - DII																	
		DID per number ported (Residence)				TNPDR		0.42									
		DID per number ported (Business				TNPDB		0.42									
		DID per service order, per location (Residence				TNPRD		2.02	2.02	2.01	2.01	3.50		19.99	19.99	19.99	19.99
		DID per service order, per location (Business				TNPBD		2.02	2.02	2.01	2.01	3.50		19.99	19.99	19.99	19.99
		DID, per trunk termination, Initia				TNPT2	68.47	185.13				3.50		19.99	19.99	19.99	19.99
		DID, per trunk termination, Subsequen				TNPT2	68.47	68.79				3.50		19.99	19.99	19.99	19.99
SERVICE PROVIDER NUMBER PORTABILITY (RIPH																	
	Note: If no rate is identified in the contract, the rate for the specific service or function will be as set forth in applicable BellSouth tariff or as negotiated by the Parties upon request by either Party.																

ODUF/ADUF/CMDS
Louisiana

CATEGORY	NOTES	UNBUNDLED NETWORK ELEMENT	Interim	Zone	BCS	USOC	RATES ($)					OSS RATES ($)					
								Nonrecurring		Nonrecurring		Svc Order Submitted Elec per LSR	Svc Order Submitted Manually per LSR	Incremental Charge - Manual Svc Order vs. Electronic-1st	Incremental Charge - Manual Svc Order vs. Electronic-Add'l	Incremental Charge - Manual Svc Order vs. Electronic-Disc 1st	Incremental Charge - Manual Svc Order vs. Electronic-Disc Add'l
										Disconnect							
							Rec	First	Add'l	First	Add'l	SOMEC	SOMAN	SOMAN	SOMAN	SOMAN	SOMAN
ODUF/EDOUF/ADUF/CMDS																	
	ACCESS DAILY USAGE FILE (ADUF)																
		ADUF: Message Processing, per message				N/A	0.007983										
		ADUF: Data Transmission (CONNECT:DIRECT), per message				N/A	0.00012681										
	OPTIONAL DAILY USAGE FILE (ODUF)																
		ODUF: Recording, per message				N/A	0.0000117										
		ODUF: Message Processing, per message				N/A	0.004641										
		ODUF: Message Processing, per Magnetic Tape provisioned				N/A	48.45										
		ODUF: Data Transmission (CONNECT:DIRECT), per message				N/A	0.00010568										
	CENTRALIZED MESSAGE DISTRIBUTION SERVICE (CMDS)																
		CMDS: Message Processing, per message				N/A	0.004										
		CMDS: Data Transmission (CONNECT:DIRECT), per message				N/A	0.001										
	Notes: If no rate is identified in the contract, the rate for the specific service or function will be as set forth in applicable BellSouth tariff or as negotiated by the Parties upon request by either Party.																

Amendment to the
Interconnection Agreement Between
BellSouth Telecommunications, Inc.
and
ACCESS Integrated Networks, Inc.

This Agreement (the "Amendment") is made and entered into between BellSouth Telecommunications, Inc. ("BellSouth") a Georgia corporation, and ACCESS Integrated Networks, Inc. ("ACCESS Integrated") a Georgia corporation.

WHEREAS, The Parties desire to amend that certain Interconnection Agreement between BellSouth and ACCESS Integrated dated February 17, 2000 (the "Agreement") in order to incorporate rates established by the Florida Public Service Commission order in Docket Number 990649-TP, issued October 18, 2001, as well as the rates established by the Mississippi Public Service Commission order in Docket Number 00-UA-999, issued October 12, 2001;

NOW THEREFORE, in consideration of the mutual provisions contained herein and other good and valuable consideration, the receipt and sufficiency of which are hereby acknowledged, BellSouth and Access Integrated hereby convenant and agree as follows:

1. The Florida and Mississippi rates contained in Exhibit E and Exhibit G respectively of Attachment 1 of the Agreement are hereby deleted in entirety and replaced with the rates in Exhibit 1 of this Amendment.

2. The Florida and Mississippi rates contained in Exhibit B and Exhibit C respectively of Attachment 2 of the Agreement are hereby deleted in entirety and replaced with the rates in Exhibit 2 of this Amendment.

3. The Florida and Mississippi rates contained in Exhibit A of Attachment 3 of the Agreement are hereby deleted in entirety and replaced with the rates in Exhibit 3 of this Amendment.

4. The Florida and Mississippi rates contained in Exhibit A of Attachment 5 of the Agreement are hereby deleted in entirety and replaced with the rates in Exhibit 4 of this Amendment.

5. The Florida and Mississippi rates contained in Exhibit A of Attachment 7 of the Agreement are hereby deleted in entirety and replaced with the rates in Exhibit 5 of this Amendment.

9. The Parties agree that all of the other provisions of the Agreement, dated February 17, 2000, shall remain in full force and effect.

10. The Parties further agree that either or both of the Parties is authorized to submit this Amendment to the Florida Public Service Commission and Mississippi Public Service Commission or other regulatory body having jurisdiction over the subject matter of this Amendment, for approval subject to Section 252(e) of the federal Telecommunications Act of 1996.

This Amendment is made effective upon the date that it is signed by both Parties.

IN WITNESS WHEREOF, the parties hereto have caused this Amendment to be executed by their respective duly authorized representatives on the data indicated below.

ACCESS Integrated Networks, Inc.	**BellSouth Telecommunications, Inc.**
_____	_____
Signature	Signature
_____	_____
Name	Name
_____	_____
Title	Title
_____	_____
Date	Date

Amendment to the
Interconnection Agreement Between
BellSouth Telecommunications, Inc.
and
ACCESS Integrated Networks, Inc.

This Agreement (the "Amendment") is made and entered into between BellSouth Telecommunications, Inc. ("BellSouth") a Georgia corporation, and ACCESS Integrated Networks, Inc. ("ACCESS Integrated") a Georgia corporation.

WHEREAS, The Parties desire to amend that certain Interconnection Agreement between BellSouth and ACCESS Integrated dated February 17, 2000 (the "Agreement") in order to incorporate rates established by the South Carolina Public Service Commission in Docket Number 2001-65-C-Order Number 2001-1089, dated November 30, 2001;

NOW THEREFORE, in consideration of the mutual provisions contained herein and other good and valuable consideration, the receipt and sufficiency of which are hereby acknowledged, BellSouth and Access Integrated hereby convenant and agree as follows:

1. Those permanent rates established by the South Carolina PSC in Docket No. 2001-65-C-Order Number 2001-1089 for certain Unbundled Network Elements and Local Interconnection in South Carolina are as set forth in Exhibit 1 attached hereto and incorporated herein by this reference.

2. All rate elements and rates in Attachments 1, 2, 3, 5 and 7 for South Carolina are hereby deleted and replaced in their entirety with the corresponding rates and rate elements in Exhibit 1.

3. The Parties agree that all of the other provisions of the Agreement, dated February 17, 2000, shall remain in full force and effect.

4. The Parties further agree that either or both of the Parties is authorized to submit this Amendment to the South Carolina Public Service Commission or other regulatory body having jurisdiction over the subject matter of this Amendment, for approval subject to Section 252(e) of the federal Telecommunications Act of 1996.

This Amendment is made effective thirty (30) calendar days following the last signature of both Parties.

IN WITNESS WHEREOF, the parties hereto have caused this Amendment to be executed by their respective duly authorized representatives on the data indicated below.

ACCESS Integrated Networks, Inc.	**BellSouth Telecommunications, Inc.**
Signature	Signature
Name	Name
Title	Title
Date	Date

AMENDMENT
TO THE
AGREEMENT BETWEEN
ACCESS INTEGRATED NETWORKS, INC.
AND
BELLSOUTH TELECOMMUNICATIONS, INC.
DATED FEBRUARY 17, 2000

Pursuant to this Amendment, (the "Amendment"), Access Integrated Networks, Inc. ("Access Integrated"), and BellSouth Telecommunications, Inc. ("BellSouth"), hereinafter referred to collectively as the "Parties," hereby agree to amend that certain Interconnection Agreement between the Parties dated February 17, 2000 ("Agreement").

WHEREAS, BellSouth and Access Integrated entered into the Agreement on February 17, 2000 and;

NOW THEREFORE, in consideration of the mutual provisions contained herein and other good and valuable consideration, the receipt and sufficiency of which are hereby acknowledged, the Parties hereby covenant and agree as follows:

1. The parties agree to amend Attachment 2 to add provisions for an Unbundled Network Port Element (UNE-P) with Remote Call Forwarding capability ("URCF service"). The provisions are as set forth in Exhibit 1 attached herein by reference and will be incorporated in the agreement in section 4.1.6.4 of Attachment 2.

2. The parties further agree to add the following rate elements for URCF to Attachment 2 Exhibit C as set forth in Exhibit 2 of this Amendment. Exhibit 2 is attached herein and incorporated by this reference.

3. All of the other provisions of the Agreement, dated February 17, 2000, shall remain in full force and effect.

4. Either or both of the Parties is authorized to submit this Amendment to the respective state regulatory authorities for approval subject to Section 252(e) of the Federal Telecommunications Act of 1996.

IN WITNESS WHEREOF, the Parties hereto have caused this Amendment to be executed by their respective duly authorized representatives on the date indicated below.

ACCESS Integrated Networks, Inc.	**BellSouth Telecommunications, Inc.**
By: SIGNATURE ON FILE	By: SIGNATURE ON FILE
Name: William T Wright	Name: Patrick C FInlen
Title: President	Title: Managing Director
Date: 06-18-02	Date: 06-24-02

AMENDMENT
TO THE
AGREEMENT BETWEEN
ACCESS INTEGRATED NETWORKS, INC.
AND
BELLSOUTH TELECOMMUNICATIONS, INC.
DATED FEBRUARY 17, 2000

Pursuant to this Amendment, (the "Amendment"), Access Integrated Networks, Inc. ("Access Integrated"), and BellSouth Telecommunications, Inc. ("BellSouth"), hereinafter referred to collectively as the "Parties," hereby agree to amend that certain Interconnection Agreement between the Parties dated February 17, 2000 ("Agreement") in order to incorporate North Carolina Public Service Commission (PSC) ordered rates.

WHEREAS, BellSouth and Access Integrated entered into the Agreement on February 17, 2000 and;

NOW THEREFORE, in consideration of the mutual provisions contained herein and other good and valuable consideration, the receipt and sufficiency of which are hereby acknowledged, the Parties hereby covenant and agree as follows:

Pursuant to this Amendment, the Parties hereby agree to amend the Interconnection Agreement to reflect the following:

1. The Parties agree to delete the North Carolina rates in Exhibit G of Attachment 1 in its entirety.

2. The Parties agree to delete the North Carolina rates in Exhibit C of Attachment 2 in its entirety and replace them with the final rates ordered by the North Carolina Public Service Commission on May 1, 2002, set forth in Exhibit 1 of this Amendment, attached hereto and incorporated herein by this reference.

3. The Parties agree to delete the North Carolina rates in Exhibit A of Attachment 3 in its entirety and replace them with the final rates ordered by the North Carolina Public Service Commission on May 1, 2002, set forth in Exhibit 2 of this Amendment, attached hereto and incorporated herein by this reference.

4. The Parties agree to delete the North Carolina rates in Exhibit A of Attachment 7 in its entirety and replace them with the final rates ordered by the North Carolina Public Service Commission on May 1, 2002, set forth in Exhibit 3 of this Amendment, attached hereto and incorporated herein by this reference.

5. All of the other provisions of the Agreement, dated February 17, 2002, shall remain in full force and effect.

6. Either or both of the Parties is authorized to submit this Amendment to the respective state regulatory authorities for approval subject to Section 252(e) of the Federal Telecommunications Act of 1996.

7. Neither Party waives any right to seek clarification from the Commission regarding retroactive application of the rates contained in this Amendment.

IN WITNESS WHEREOF, the Parties hereto have caused this Amendment to be executed by their respective duly authorized representatives on the date indicated below.

Access Integrated Networks, Inc.
By: Signature on file

Name: W. T. Wright

Title: President

Date: August 8, 2002

BellSouth Telecommunications, Inc.
By: Signature on file

Name: Patrick C. Finlen

Title: Asst. Director

Date: August 8, 2002

AMENDMENT
TO THE
AGREEMENT BETWEEN
ACCESS INTEGRATED NETWORKS, INC.
AND
BELLSOUTH TELECOMMUNICATIONS, INC.
DATED FEBRUARY 17, 2000

Pursuant to this Amendment, (the "Amendment"), Access Integrated Networks, Inc., ("Access Integrated"), and BellSouth Telecommunications, Inc. ("BellSouth"), hereinafter referred to collectively as the "Parties," hereby agree to amend that certain Interconnection Agreement between the Parties dated February 17, 2000 ("Agreement").

WHEREAS, BellSouth and Access Integrated entered into the Agreement on February 17, 2000, and;

NOW THEREFORE, in consideration of the mutual provisions contained herein and other good and valuable consideration, the receipt and sufficiency of which are hereby acknowledged, the Parties hereby covenant and agree as follows:

1. The Parties agree to delete the Alabama rates in Exhibit G of Attachment 1 in its entirety.

2. The Parties agree to delete the Alabama rates in Exhibit C of Attachment 2 in its entirety and replace them with the final rates set forth in Exhibit 1 of this Amendment, attached hereto and incorporated herein by this reference.

3. The Parties agree to delete the Alabama rates in Exhibit A of Attachment 3 in its entirety and replace them with the final rates set forth in Exhibit 2 of this Amendment, attached hereto and incorporated herein by this reference.

4. The Parties agree to delete the Alabama rates in Exhibit A of Attachment 4 in its entirety and replace them with the final rates set forth in Exhibit 3 of this Amendment, attached hereto and incorporated herein by this reference.

5. The Parties agree to delete the Alabama rates in Exhibit C of Attachment 7 in its entirety and replace them with the final rates set forth in Exhibit 4 of this Amendment, attached hereto and incorporated herein by this reference.

6. All of the other provisions of the Agreement, dated February 17, 2000, shall remain in full force and effect.

7. Either or both of the Parties is authorized to submit this Amendment to the respective state regulatory authorities for approval subject to Section 252(e) of the Federal Telecommunications Act of 1996.

8. Neither party waives any right to seek clarification from the Commission regarding retroactive application of the rates contained in this Amendment.

IN WITNESS WHEREOF, the Parties hereto have caused this Amendment to be executed by their respective duly authorized representatives on the date indicated below.

Access Integrated Networks, Inc.	BellSouth Telecommunications, Inc.
By: Signature on file	By: Signature on file
Name: W. T. Wright	Name: Patrick C. Finlen
Title: President	Title: Asst. Director
Date: August 6, 2002	Date: August 8, 2002

AMENDMENT
TO THE
AGREEMENT BETWEEN
ACCESS INTEGRATED NETWORKS, INC.
AND
BELLSOUTH TELECOMMUNICATIONS, INC.
DATED FEBRUARY 17, 2000

Pursuant to this Amendment, (the "Amendment"), Access Integrated Networks, Inc., ("Access Integrated"), and BellSouth Telecommunications, Inc. ("BellSouth"), hereinafter referred to collectively as the "Parties," hereby agree to amend that certain Interconnection Agreement between the Parties dated February 17, 2000 ("Agreement") to be upon the date of the last signature executing the Amendment.

WHEREAS, BellSouth and Access Integrated entered into the Agreement on February 17, 2000, and;

NOW THEREFORE, in consideration of the mutual provisions contained herein and other good and valuable consideration, the receipt and sufficiency of which are hereby acknowledged, the Parties hereby covenant and agree as follows:

1. The Parties agree to add to the rates in Exhibit C of Attachment 2, the rates set forth in Exhibit 1 of this Amendment, attached hereto and incorporated herein by this reference.

2. All of the other provisions of the Agreement, dated February 17, 2000, shall remain in full force and effect.

3. Either or both of the Parties is authorized to submit this Amendment to the respective state regulatory authorities for approval subject to Section 252(e) of the Federal Telecommunications Act of 1996.

4. Neither party waives any right to seek clarification from the Commission regarding retroactive application of the rates contained in this Amendment.

IN WITNESS WHEREOF, the Parties hereto have caused this Amendment to be executed by their respective duly authorized representatives on the date indicated below.

Access Integrated Networks, Inc.	BellSouth Telecommunications, Inc.
By: Signature on file	By: Signature on file
Name: William T. Wright	Name: Elizabeth R. A. Shiroishi
Title: President	Title: Assistant Director
Date: September 4, 2002	Date: September 5, 2002

AMENDMENT
TO THE
AGREEMENT BETWEEN
ACCESS INTEGRATED NETWORKS, INC.
AND
BELLSOUTH TELECOMMUNICATIONS, INC.
DATED FEBRUARY 17, 2000

Pursuant to this Amendment, (the "Amendment"), Access Integrated Networks, Inc. ("Access Integrated"), and BellSouth Telecommunications, Inc. ("BellSouth"), hereinafter referred to collectively as the "Parties," hereby agree to amend that certain Interconnection Agreement between the Parties dated February 17, 2000, ("Agreement").

WHEREAS, BellSouth and Access Integrated entered into the Agreement on February 17, 2000, and;

NOW THEREFORE, in consideration of the mutual provisions contained herein and other good and valuable consideration, the receipt and sufficiency of which are hereby acknowledged, the Parties hereby covenant and agree as follows:

1. The Parties agree to incorporate the rates ordered by the Kentucky Public Service Commission in Case No. 382 by replacing in their entirety the Attachment 2 and Attachment 7 rates for the state of Kentucky with the rates as set forth in Exhibit 1 of this Amendment attached hereto and incorporated herein by this reference.

2. All of the other provisions of the Agreement, dated February 17, 2000, shall remain in full force and effect.

3. Either or both of the Parties is authorized to submit this Amendment to the respective state regulatory authorities for approval subject to Section 252(e) of the Federal Telecommunications Act of 1996.

4. Neither party waives any right to seek clarification from the Commission regarding retroactive application of the rates contained in this Amendment.

IN WITNESS WHEREOF, the Parties hereto have caused this Amendment to be executed by their respective duly authorized representatives on the date indicated below.

Access Integrated Networks, Inc.	**BellSouth Telecommunications, Inc.**
By: Signature on file	By: Signature on file
Name: William T. Wright	Name: Elizabeth Shiroishi
Title: President	Title: Assistant Manager
Date: Septembe 12, 2002	Date: September 16, 2002

AMENDMENT
TO THE
AGREEMENT BETWEEN
ACCESS INTEGRATED NETWORKS, INC.
AND
BELLSOUTH TELECOMMUNICATIONS, INC.
DATED FEBRUARY 17, 2000

Pursuant to this Amendment, (the "Amendment"), Access Integrated Networks, Inc. ("Access Integrated"), and BellSouth Telecommunications, Inc. ("BellSouth"), hereinafter referred to collectively as the "Parties," hereby agree to amend that certain Interconnection Agreement between the Parties dated February 17, 2000, ("Agreement").

WHEREAS, BellSouth and Access Integrated entered into the Agreement on February 17, 2000, and;

NOW THEREFORE, in consideration of the mutual provisions contained herein and other good and valuable consideration, the receipt and sufficiency of which are hereby acknowledged, the Parties hereby covenant and agree as follows:

1. The Parties agree to replace the rates for the 2-wire UNE Loop/Port Combination (Res, Bus, PBX, Coin and ISDN) with the rates as set forth in Exhibit 1attached hereto and incorporated herein by this reference.

2. All of the other provisions of the Agreement, dated February 17, 2000, shall remain in full force and effect.

3. Either or both of the Parties is authorized to submit this Amendment to the respective state regulatory authorities for approval subject to Section 252(e) of the Federal Telecommunications Act of 1996.

4. Neither party waives any right to seek clarification from the Commission regarding retroactive application of the rates contained in this Amendment.

IN WITNESS WHEREOF, the Parties hereto have caused this Amendment to be executed by their respective duly authorized representatives on the date indicated below.

Access Integrated Networks, Inc.	**BellSouth Telecommunications, Inc.**
By: Signature on file	By: Signature on file
Name: William T. Wright	Name: Elizabeth R. A. Shiroishi
Title: President	Title: Assistant Director
Date: September 17, 2002	Date: September 18, 2002

AMENDMENT
TO THE
AGREEMENT BETWEEN
ACCESS INTEGRATED NETWORKS, INC.
AND
BELLSOUTH TELECOMMUNICATIONS, INC.
DATED FEBRUARY 17, 2000

Pursuant to this Amendment, (the "Amendment"), Access Integrated Networks, Inc. ("Access Integrated"), and BellSouth Telecommunications, Inc. ("BellSouth"), hereinafter referred to collectively as the "Parties," hereby agree to amend that certain Interconnection Agreement between the Parties dated February 17, 2000, ("Agreement").

WHEREAS, BellSouth and Access Integrated entered into the Agreement on February 17, 2000, and;

NOW THEREFORE, in consideration of the mutual provisions contained herein and other good and valuable consideration, the receipt and sufficiency of which are hereby acknowledged, the Parties hereby covenant and agree as follows:

1. The Parties agree to replace the market rates for the 2-wire UNE Loop/Port Combination (Res, Bus, PBX, Coin and ISDN) and the cost based rates for the 2-wire ISDN Loop/Port Combination with the rates as set forth in Exhibit 1attached hereto and incorporated herein by this reference.

2. All of the other provisions of the Agreement, dated February 17, 2000, shall remain in full force and effect.

3. Either or both of the Parties is authorized to submit this Amendment to the respective state regulatory authorities for approval subject to Section 252(e) of the Federal Telecommunications Act of 1996.

4. Neither party waives any right to seek clarification from the Commission regarding retroactive application of the rates contained in this Amendment.

IN WITNESS WHEREOF, the Parties hereto have caused this Amendment to be executed by their respective duly authorized representatives on the date indicated below.

Access Integrated Networks, Inc.	**BellSouth Telecommunications, Inc.**
By: Signature on file	By: Signature on file
Name: William T. Wright	Name: Elizabeth R. A. Shiroishi
Title: President	Title: Assistant Director
Date: October 3, 2002	Date: October 8, 2002

AMENDMENT
TO THE
AGREEMENT BETWEEN
ACCESS INTEGRATED NETWORKS, INC.
AND
BELLSOUTH TELECOMMUNICATIONS, INC.
DATED FEBRUARY 17, 2000

Pursuant to this Amendment, (the "Amendment"), Access Integrated Networks, Inc. ("Access Integrated"), and BellSouth Telecommunications, Inc. ("BellSouth"), hereinafter referred to collectively as the "Parties," hereby agree to amend that certain Interconnection Agreement between the Parties dated February 17, 2000, ("Agreement").

WHEREAS, BellSouth and Access Integrated entered into the Agreement on February 17, 2000, and;

NOW THEREFORE, in consideration of the mutual provisions contained herein and other good and valuable consideration, the receipt and sufficiency of which are hereby acknowledged, the Parties hereby covenant and agree as follows:

1. The Parties agree to add the End Office Switching Rate to the Attachment 3 rate table, for the state of Alabama, as set forth in Exhibit 1 attached hereto and incorporated herein by this reference.

2. The Parties agree to replace the usage rates in the Attachment 3 rate table, for the state of North Carolina, with the rates as set forth in Exhibit 1 attached hereto and incorporated herein by this reference.

3. All of the other provisions of the Agreement, dated February 17, 2000, shall remain in full force and effect.

4. Either or both of the Parties is authorized to submit this Amendment to the respective state regulatory authorities for approval subject to Section 252(e) of the Federal Telecommunications Act of 1996.

IN WITNESS WHEREOF, the Parties hereto have caused this Amendment to be executed by their respective duly authorized representatives on the date indicated below.

Access Integrated Networks, Inc.	**BellSouth Telecommunications, Inc.**
By: Signature on file	By: Signature on file
Name: William T. Wright	Name: Elizabeth R. A. Shiroishi
Title: President	Title: Assistant Director
Date: October 8, 2002	Date: October 14, 2002

AMENDMENT
TO THE
AGREEMENT BETWEEN
ACCESS INTEGRATED NETWORKS, INC.
AND
BELLSOUTH TELECOMMUNICATIONS, INC.
DATED FEBRUARY 17, 2000

Pursuant to this Amendment, (the "Amendment"), Access Integrated Networks, Inc. ("Access Integrated"), and BellSouth Telecommunications, Inc. ("BellSouth"), hereinafter referred to collectively as the "Parties," hereby agree to amend that certain Interconnection Agreement between the Parties dated February 17, 2000 ("Agreement").

WHEREAS, BellSouth and Access Integrated entered into the Agreement on February 17, 2000, and;

NOW THEREFORE, in consideration of the mutual provisions contained herein and other good and valuable consideration, the receipt and sufficiency of which are hereby acknowledged, the Parties hereby covenant and agree as follows:

1. The Parties agree to delete the rates in Attachments 1, 2, 3, 4, and 7, for the state of Florida, in their entirety and replace with the rates as set forth in Exhibit 1 attached hereto and incorporated herein by this reference.

2. All of the other provisions of the Agreement, dated February 17, 2000, shall remain in full force and effect.

3. Either or both of the Parties is authorized to submit this Amendment to the respective state regulatory authorities for approval subject to Section 252(e) of the Federal Telecommunications Act of 1996.

IN WITNESS WHEREOF, the Parties hereto have caused this Amendment to be executed by their respective duly authorized representatives on the date indicated below.

Access Integrated Networks, Inc.	**BellSouth Telecommunications, Inc.**
By: Signature on file	By: Signature on file
Name: William T. Wright	Name: Elizabeth R. A. Shiroishi
Title: President	Title: Assistant Director
Date: October 9, 2002	Date: October 14, 2002

AMENDMENT
TO THE
AGREEMENT BETWEEN
ACCESS INTEGRATED NETWORKS, INC.
AND
BELLSOUTH TELECOMMUNICATIONS, INC.
DATED FEBRUARY 17, 2000

Pursuant to this Amendment, (the "Amendment"), Access Integrated, Inc. ("Access Integrated"), and BellSouth Telecommunications, Inc. ("BellSouth"), hereinafter referred to collectively as the "Parties," hereby agree to amend that certain Interconnection Agreement between the Parties dated February 17, 2000, ("Agreement").

WHEREAS, BellSouth and Access Integrated entered into the Agreement on February 17, 2000, and;

WHEREAS, the Telecommunications Act of 1996 (the "Act") was signed into law on February 8, 1996; and

WHEREAS, section 252(i) of the Act requires BellSouth to make available any interconnection, service, or network element provided under an agreement approved by the appropriate state regulatory body to any other requesting telecommunications carrier upon the same terms and conditions as those provided in the agreement in its entirety; and

WHEREAS, Access Integrated has requested that BellSouth make available Section 2.16.7 in Attachment 2 of the Supra Telecommunications and Information Systems, Inc.'s Interconnection Agreement executed between BellSouth and Supra Telecommunications and Information Systems, Inc. dated July 15, 2002 for the state(s) of Florida.

NOW, THEREFORE, in consideration of the promises and mutual covenants of this Agreement, Access Integrated and BellSouth hereby agree as follows:

1. Access Integrated and BellSouth shall adopt Section 2.16.7 in Attachment 2 of the Supra Telecommunications and Information Systems, Inc.'s Interconnection Agreement dated July 15, 2002.

2. The Parties agree that the adopted provision will be added to Attachment 2, Section 5 of Access Integrated's interconnection Agreement as follows:

   5.4.7 Where a BellSouth voice customer who is subscribing to BellSouth FastAccess Internet Service converts its voice service to Supra utilizing a UNE-P line, BellSouth will continue to provide FastAccess service to that end user.

3. The term of this Agreement shall be effective upon the date of last signature, and shall expire on February 16, 2003, in accordance with section 2 of the General Terms and Conditions of the Interconnection Agreement between BellSouth and Access Integrated.

4. All of the other provisions of the Agreement, dated February 17, 2000, shall remain in full force and effect.

5. Either or both of the Parties is authorized to submit this Amendment to the respective state regulatory authorities for approval subject to Section 252(e) of the Federal Telecommunications Act of 1996.

IN WITNESS WHEREOF, the Parties hereto have caused this Amendment to be executed by their respective duly authorized representatives on the date indicated below.

Access Integrated Networks, Inc.	BellSouth Telecommunications, Inc.
By: Signature on file	By: Signature on file
Name: William T. Wright	Name: Elizabeth R. A. Shiroishi
Title: President & CEO	Title: Assistant Director
Date: October 30, 2002	Date: November 4, 2002

AMENDMENT
TO THE
AGREEMENT BETWEEN
ACCESS INTEGRATED NETWORKS, INC.
AND
BELLSOUTH TELECOMMUNICATIONS, INC.
DATED FEBRUARY 17, 2000

Pursuant to this Amendment, (the "Amendment"), Access Integrated Networks, Inc., ("Access Integrated"), and BellSouth Telecommunications, Inc. ("BellSouth"), hereinafter referred to collectively as the "Parties," hereby agree to amend that certain Interconnection Agreement between the Parties dated February 17, 2000 ("Agreement") to be effective 30 days after the date of the last signature executing the Amendment.

WHEREAS, BellSouth and Access Integrated entered into the Agreement on February 17, 2000, and;

NOW THEREFORE, in consideration of the mutual provisions contained herein and other good and valuable consideration, the receipt and sufficiency of which are hereby acknowledged, the Parties hereby covenant and agree as follows:

1. The Parties agree to add to the rates in Exhibit B of Attachment 2, the rates set forth in Exhibit 1 of this Amendment, attached hereto and incorporated herein by this reference.

2. All of the other provisions of the Agreement, dated February 17, 2000, shall remain in full force and effect.

3. Either or both of the Parties is authorized to submit this Amendment to the respective state regulatory authorities for approval subject to Section 252(e) of the Federal Telecommunications Act of 1996.

IN WITNESS WHEREOF, the Parties hereto have caused this Amendment to be executed by their respective duly authorized representatives on the date indicated below.

Access Integrated Networks, Inc.	BellSouth Telecommunications, Inc.
By: SIGNATURE ON FILE	By: SIGNATURE ON FILE
Name: William T Wright	Name: Elizabeth R. A. Shiroishi
Title: President	Title: Assistant Director
Date: 11-13-02	Date: 11-15-02

AMENDMENT
TO THE
AGREEMENT BETWEEN
ACCESS INTEGRATED NETWORKS, INC.
AND
BELLSOUTH TELECOMMUNICATIONS, INC.
DATED FEBRUARY 17, 2000

Pursuant to this Amendment, (the "Amendment"), Access Integrated Networks, Inc. ("Access Integrated"), and BellSouth Telecommunications, Inc. ("BellSouth"), hereinafter referred to collectively as the "Parties," hereby agree to amend that certain Interconnection Agreement between the Parties dated February 17, 2000 ("Agreement").

WHEREAS, BellSouth and ACCESS INTEGRATED entered into the Agreement on February 17, 2000 and;

NOW THEREFORE, in consideration of the mutual provisions contained herein and other good and valuable consideration, the receipt and sufficiency of which are hereby acknowledged, the Parties hereby covenant and agree as follows:

1. The South Carolina rates contained in Exhibit G of Attachment 1 of the Agreement are hereby deleted in entirety and replaced with the rates in Exhibit A of this Amendment, attached hereto and incorporated herein by this reference.

2. The South Carolina rates contained in Exhibit A of Attachment 7 of the Agreement are hereby deleted in entirety and replaced with the rates in Exhibit B of this Amendment, attached hereto and incorporated herein by this reference.

3. All of the other provisions of the Agreement, dated February 17, 2000, shall remain in full force and effect.

4. Either or both of the Parties is authorized to submit this Amendment to the respective state regulatory authorities for approval subject to Section 252(e) of the Federal Telecommunications Act of 1996.

This Amendment shall be deemed effective upon the date of the last signature of both Parties and shall apply to the state of South Carolina.

IN WITNESS WHEREOF, the Parties hereto have caused this Amendment to be executed by their respective duly authorized representatives on the date indicated below.

ACCESS INTEGRATED NETWORKS, INC.	**BellSouth Telecommunications, Inc.**
By: SIGNATURE ON FILE	By: SIGNATURE ON FILE
Name: William T. Wright	Name: Elizabeth R. A. Shiroishi
Title: President & CEO	Title: Assistant Director
Date: 11/18/02	Date: 11/21/02

AMENDMENT
TO THE
AGREEMENT BETWEEN
ACCESS INTEGRATED NETWORKS, INC.
AND
BELLSOUTH TELECOMMUNICATIONS, INC.
DATED FEBRUARY 17, 2000

Pursuant to this Amendment, (the "Amendment"), Access Integrated Networks, Inc. ("Access Integrated"), and BellSouth Telecommunications, Inc. ("BellSouth"), hereinafter referred to collectively as the "Parties," hereby agree to amend that certain Interconnection Agreement between the Parties dated February 17, 2000 ("Agreement").

WHEREAS, BellSouth and ACCESS INTEGRATED entered into the Agreement on February 17, 2000 and;

NOW THEREFORE, in consideration of the mutual provisions contained herein and other good and valuable consideration, the receipt and sufficiency of which are hereby acknowledged, the Parties hereby covenant and agree as follows:

1. The North Carolina rates contained in Exhibit G of Attachment 1 of the Agreement are hereby deleted in entirety and replaced with the rates in Exhibit A of this Amendment, attached hereto and incorporated herein by this reference.

2. The North Carolina rates contained in Exhibit A of Attachment 7 of the Agreement are hereby deleted in entirety and replaced with the rates in Exhibit B of this Amendment, attached hereto and incorporated herein by this reference.

3. All of the other provisions of the Agreement, dated February 17, 2000, shall remain in full force and effect.

4. Either or both of the Parties is authorized to submit this Amendment to the respective state regulatory authorities for approval subject to Section 252(e) of the Federal Telecommunications Act of 1996.

This Amendment shall be deemed effective upon the date of the last signature of both Parties and shall apply to the state of North Carolina.

IN WITNESS WHEREOF, the Parties hereto have caused this Amendment to be executed by their respective duly authorized representatives on the date indicated below.

ACCESS INTEGRATED NETWORKS, INC.	**BellSouth Telecommunications, Inc.**
By: SIGNATURE ON FILE	By: SIGNATURE ON FILE
Name: William T Wright	Name: Patrick C. Finlen
Title: President/CEO	Title: Managing Director
Date: November 27, 2002	Date: December 3, 2002

AMENDMENT
TO THE
AGREEMENT BETWEEN
ACCESS INTEGRATED NETWORKS, INC.
AND
BELLSOUTH TELECOMMUNICATIONS, INC.
DATED FEBRUARY 17, 2000

Pursuant to this Amendment, (the "Amendment"), ACCESS INTEGRATED NETWORKS, Inc. ("ACCESS INTEGRATED"), and BellSouth Telecommunications, Inc. ("BellSouth"), hereinafter referred to collectively as the "Parties," hereby agree to amend that certain Interconnection Agreement between the Parties dated February 17, 2000 ("Agreement").

WHEREAS, BellSouth and ACCESS INTEGRATED entered into the Agreement on February 17, 2000, and;

NOW THEREFORE, in consideration of the mutual provisions contained herein and other good and valuable consideration, the receipt and sufficiency of which are hereby acknowledged, the Parties hereby covenant and agree as follows:

1. The Parties agree that all terms, conditions, rates and provisions of the Agreement, dated February 17, 2000, shall remain in full force and effect for an additional period of three (3) months until May 17, 2003.

2. All of the other provisions of the Agreement, dated February 17, 2000, shall remain in full force and effect.

3. Either or both of the Parties is authorized to submit this Amendment to the respective state regulatory authorities for approval subject to Section 252(e) of the Federal Telecommunications Act of 1996.

IN WITNESS WHEREOF, the Parties hereto have caused this Amendment to be executed by their respective duly authorized representatives on the date indicated below.

ACCESS INTEGRATED NETWORKS, INC.	**BellSouth Telecommunications, Inc.**
By: SIGNATURE ON FILE	By: SIGNATURE ON FILE
Name: W. T. WRIGHT	Name: Elizabeth R. A. Shiroishi
Title: President & CEO	Title: Director
Date: 2/4/03	Date: 2/6/03

AMENDMENT
TO THE
AGREEMENT BETWEEN
ACCESS INTEGRATED NETWORKS, INC.
AND
BELLSOUTH TELECOMMUNICATIONS, INC.
DATED FEBRUARY 17, 2000

Pursuant to this Amendment, (the "Amendment"), ACCESS Integrated Networks, Inc. ("ACCESS Integrated"), and BellSouth Telecommunications, Inc. ("BellSouth"), hereinafter referred to collectively as the "Parties," hereby agree to amend that certain Interconnection Agreement between the Parties dated February 17, 2000 ("Agreement").

WHEREAS, BellSouth and ACCESS Integrated entered into the Agreement on February 17, 2000, and;

WHEREAS, BellSouth and Access Integrated extended this contract until May 17, 2003, and;

NOW THEREFORE, in consideration of the mutual provisions contained herein and other good and valuable consideration, the receipt and sufficiency of which are hereby acknowledged, the Parties hereby covenant and agree as follows:

1. All terms, conditions, rates and provisions of the Agreement, dated February 17, 2000, shall remain in full force and effect for an additional period of six (6) months until November 17, 2003.

2. All of the other provisions of the Agreement, dated February 17, 2000, shall remain in full force and effect.

3. Either or both of the Parties is authorized to submit this Amendment to the respective state regulatory authorities for approval subject to Section 252(e) of the Federal Telecommunications Act of 1996.

IN WITNESS WHEREOF, the Parties hereto have caused this Amendment to be executed by their respective duly authorized representatives and such amendment shall be effective fifteen (15) days after the date of last signature.

ACCESS INTEGRATED NETWORKS, INC.	**BellSouth Telecommunications, Inc.**
By: SIGNATURE ON FILE	By: SIGNATURE ON FILE
Name: WILLIAM T WRIGHT	Name: Elizabeth R. A. Shiroishi
Title: PRESIDENT CEO	Title: Director
Date: 4/28/03	Date: 5/1/03

AMENDMENT
TO THE
AGREEMENT BETWEEN
ACCESS INTEGRATED NETWORKS, INC.
AND
BELLSOUTH TELECOMMUNICATIONS, INC.
DATED FEBRUARY 17, 2000

Pursuant to this Amendment, (the "Amendment"), Access Integrated Networks, Inc. ("Access Integrated"), and BellSouth Telecommunications, Inc. ("BellSouth"), hereinafter referred to collectively as the "Parties," hereby agree to amend that certain Interconnection Agreement between the Parties dated February 17, 2000 ("Agreement").

WHEREAS, BellSouth and Access Integrated entered into the Agreement on February 17, 2000, and;

WHEREAS. The Parties desire to add provisions to meet the requirements of the Louisiana Public Service Commission Order in Docket #R-26173,

NOW THEREFORE, in consideration of the mutual provisions contained herein and other good and valuable consideration, the receipt and sufficiency of which are hereby acknowledged, the Parties hereby covenant and agree as follows:

1. The Parties agree to add a new Section 2.1.23 to Attachment 2 of the Agreement, titled Provisioning of DSL over UNE-P and UNE Loops as set forth below:

2.1.23 Provisioning of DSL over UNE-P and UNE Loops

2.1.23.1 In Louisiana, in order to comply with the Louisiana Public Service Commission's Order in Docket No. R-26713, and notwithstanding any contrary provisions in this Agreement, BellSouth Tariff F.C.C. Number 1, or any other agreements or tariffs of BellSouth, BellSouth shall continue to provide BellSouth ® FastAccess® Internet service ("FastAccess"), or wholesale Low Speed DSL ("wholesale ADSL") to the end-user who obtains voice service from Access Integrated over UNE-P and UNE loops.

2.1.23.2 If Access Integrated acquires the retail voice service on a UNE-P basis for an end-user served by BellSouth where the end-user subscribes to FastAccess, or wholesale ADSL at the time of such acquisition and Access Integrated's voice end-user desires BellSouth to continue to provide FastAccess to the end-user or wholesale ADSL to the end-user's ISP and has granted permission to Access Integrated to request on the end-user's behalf that FastAccess or wholesale ADSL continue to be provided, Access Integrated will follow the Local Ordering Handbook guidelines when ordering the UNE-P service. By allowing the ADL++ to remain on the line, Access Integrated grants BellSouth the right to use the high frequency portion of its

loop without charge, for the provision of FastAccess or wholesale ADSL.

2.1.23.3 If Access Integrated wishes BellSouth to provide FastAccess or wholesale ADSL on the high frequency portion of a loop to a Access Integrated end-user served by UNE-P, and the end-user has granted permission to Access Integrated to request on the end-user's behalf that FastAccess or wholesale ADSL be provided, Access Integrated will include the UNE-P telephone number and ADL++ on the FastAccess or wholesale Low Speed DSL order for the UNE-P account. By including this ADL++ on the FastAccess or wholesale Low Speed DSL order , Access Integrated grants BellSouth the right to use the high frequency portion of its loop without charge, for the provision of FastAccess or wholesale ADSL. This assumes that the existing loop will qualify for FastAccess or wholesale ADSL. If the loop does not qualify for FastAccess or wholesale ADSL, FastAccess or wholesale ADSL will not be available for that end-user.

2.1.23.4 If Access Integrated acquires the voice and data services on a UNE loop basis for an end-user currently served by BellSouth, where the end-user subscribes to BellSouth FastAccess or has DSL service from an ISP that uses wholesale ADSL, and Access Integrated desires a seamless transition of the BellSouth voice and data services to the voice and data services of the CLEC, then Access Integrated shall order a UNE loop with the Order Coordination (OC) feature. The OC feature allows for a "hot cut" from the end user's existing service to the CLEC's UNE loop in a coordinated manner so that the required interruption of the end user's voice and data services are limited to a 15 minute window. Some UNE loops include the OC feature as a standard function that is included in the non-recurring charge of the loop itself, and other loops offer OC as separate feature with an a additional charge. Furthermore, the CLEC may also order the Order Coordination – Time Specific (OC-TS) feature. The OC-TS feature allows the CLEC to specify the time in which the "hot-cut" takes place. OC-TS is a chargeable option on all loop types. In all cases where the CLEC desires a seamless transition for the end-user, the CLEC is responsible for ensuring that its dial tone and data service is available on its specified collocation cross-connect prior to the conversion time.

2. The Parties agree to add new ADL++ USOCs to Exhibit B rates to Attachment 2-UNEs with the ADL++ USOCs as set forth in Exhibit 1 of this Amendment, attached hereto and incorporated herein by this reference.

3. This Agreement shall be deemed effective on June 1, 2003 ("Effective Date").

4. All of the other provisions of the Agreement, dated February 17, 2000, shall remain in full force and effect.

5. Either or both of the Parties is authorized to submit this Amendment to the respective state regulatory authorities for approval subject to Section 252(e) of the Federal Telecommunications Act of 1996.

IN WITNESS WHEREOF, the Parties have executed this Agreement the day and year written below.

BellSouth Telecommunications, Inc.

By: _____

Name: Elizabeth R. A. Shiroishi

Title: Director

Date: 5/23/03

Access Integrated Networks, Inc.

By: _____

Name: William T. Wright

Title: President & CEO

Date: 5-21-03

UNBUNDLED NETWORK ELEMENTS - Louisiana														Attachment: 2		Exhibit: B	
CATEGORY		RATE ELEMENTS	Interim	Zone	BCS	USOC	RATES ($)					Svc Order Submitted Elec per LSR	Svc Order Submitted Manually per LSR	Incremental Charge - Manual Svc Order vs. Electronic-1st	Incremental Charge - Manual Svc Order vs. Electronic-Add'l	Incremental Charge - Manual Svc Order vs. Electronic-Disc 1st	Incremental Charge - Manual Svc Order vs. Electronic-Disc Add'l
							Rec	Nonrecurring		Nonrecurring Disconnect		OSS Rates($)					
								First	Add'l	First	Add'l	SOMEC	SOMAN	SOMAN	SOMAN	SOMAN	SOMAN
UNBUNDLED PORT/LOOP COMBINATIONS - COST BASED RATES																	
	BellSouth ADSL (RES)																
		Asymetric Digital Subscriber Line (ADSL) Service, Virtual Circuit with data rates up to 1.5 Mbps downstream and up to 256 Kbps upstream via integrated fiber facilities, provisioning only, no rate			UEPRX	ADLAA	0.00	0.00	0.00								
		Asymetric Digital Subscriber Line (ADSL) Service, provisioning only, non-rated, identifies virtual circuits (vc) with multiple destination capability, 1 destination			UEPRX	ADLB1	0.00	0.00	0.00								
		Asymetric Digital Subscriber Line (ADSL) Service, provisioning only, non-rated, identifies virtual circuits (vc) with multiple destination capability, 2 destinations			UEPRX	ADLB2	0.00	0.00	0.00								
		Asymetric Digital Subscriber Line (ADSL) Service, provisioning only, non-rated, identifies virtual circuits (vc) with multiple destination capability, 3 destinations			UEPRX	ADLB3	0.00	0.00	0.00								
		Asymetric Digital Subscriber Line (ADSL) Service, provisioning onlt, non-rated to assign outside plant facilities for the optical Network Unit (ONU) utilizing FITL-A technology			UEPRX	ADLPL	0.00	0.00	0.00								
		Asymetric Digital Subscriber Line (ADSL) Service, provisioning only, non-rated to identify a second, third or fourth virtual circuit associated with a first virtual circuit and a common Local Exchange Service			UEPRX	ADLVC	0.00	0.00	0.00								
		Asymetric Digital Subscriber Line (ADSL) Service, ADSL virtual circuit with data rates up to 1.5 Mbps downstream and up to 256 Kbps upstream, provisioning only, zero rate			UEPRX	ADL11	0.00	0.00	0.00								
		Asymetric Digital Subscriber Line (ADSL) Service, Virtual Circuit Constant Bit Rate (CBR) with Data rates of 384 Kbps downstream and 384 Kbps upstream, provisioning only			UEPRX	ADL22	0.00	0.00	0.00								
		Asymetric Digital Subscriber Line (ADSL) Service, Virtual Circuit Unspecified Bit Rate (UBR) with Data Rates from 1.5-1.8 Mbps downstream and from 512-768 Kbps upstream, provisioning only			UEPRX	ADL31	0.00	0.00	0.00								
		Asymetric Digital Subscriber Line (ADSL) Service, Virtual Circuit Unspecified Bit Rate (UBR) with Data Rates from 2.0 to 4.0 Mbps downstream and from 640 to 896 Kbps upstream, provisioning only			UEPRX	ADL41	0.00	0.00	0.00								
		Asymetric Digital Subscriber Line (ADSL) Service, Virtual Circuit Unspecified Bit Rate (UBR) with Data Rates from 4.0 to 6.0 Mbps downstream and from 640 Kbps to 896 Kbps upstream, provisioning only			UEPRX	ADL51	0.00	0.00	0.00								
		Asymetric Digital Subscriber Line (ADSL) Service, Virtual Circuit Unspecified Bit Rate (UBR) with Data Rates at least 768 Kbps downstream and 512 Kbps upstream, provisioning only			UEPRX	ADL61	0.00	0.00	0.00								
		Asymetric Digital Subscriber Line (ADSL) Service, Symmetric Virtual Circuit with upstream and downstream data rates of at least 192 Kbps, provisioning only			UEPRX	ADL71	0.00	0.00	0.00								
	BellSouth ADSL (BUS)																
		Asymetric Digital Subscriber Line (ADSL) Service, Virtual Circuit with data rates up to 1.5 Mbps downstream and up to 256 Kbps upstream via integrated fiber facilities, provisioning only, no rate			UEPBX	ADLAA	0.00	0.00	0.00								
		Asymetric Digital Subscriber Line (ADSL) Service, provisioning only, non-rated, identifies virtual circuits (vc) with multiple destination capability, 1 destination			UEPBX	ADLB1	0.00	0.00	0.00								
		Asymetric Digital Subscriber Line (ADSL) Service, provisioning only, non-rated, identifies virtual circuits (vc) with multiple destination capability, 2 destinations			UEPBX	ADLB2	0.00	0.00	0.00								

UNBUNDLED NETWORK ELEMENTS - Louisiana														Attachment: 2		Exhibit: B	
CATEGORY		RATE ELEMENTS	Interim	Zone	BCS	USOC	RATES ($)					Svc Order Submitted Elec per LSR	Svc Order Submitted Manually per LSR	Incremental Charge - Manual Svc Order vs. Electronic-1st	Incremental Charge - Manual Svc Order vs. Electronic-Add'l	Incremental Charge - Manual Svc Order vs. Electronic-Disc 1st	Incremental Charge - Manual Svc Order vs. Electronic-Disc Add'l
							Rec	Nonrecurring		Nonrecurring Disconnect		OSS Rates($)					
								First	Add'l	First	Add'l	SOMEC	SOMAN	SOMAN	SOMAN	SOMAN	SOMAN
		Asymetric Digital Subscriber Line (ADSL) Service, provisioning only, non-rated, identifies virtual circuits (vc) with multiple destination capability, 3 destinations			UEPBX	ADLB3	0.00	0.00	0.00								
		Asymetric Digital Subscriber Line (ADSL) Service, provisioning onlt, non-rated to assign outside plant facilities for the optical Network Unit (ONU) utilizing FITL-A technology			UEPBX	ADLPL	0.00	0.00	0.00								
		Asymetric Digital Subscriber Line (ADSL) Service, provisioning only, non-rated to identify a second, third or fourth virtual circuit associated with a first virtual circuit and a common Local Exchange Service			UEPBX	ADLVC	0.00	0.00	0.00								
		Asymetric Digital Subscriber Line (ADSL) Service, ADSL virtual circuit with data rates up to 1.5 Mbps downstream and up to 256 Kbps upstream, provisioning only, zero rate			UEPBX	ADL11	0.00	0.00	0.00								
		Asymetric Digital Subscriber Line (ADSL) Service, Virtual Circuit Constant Bit Rate (CBR) with Data rates of 384 Kbps downstream and 384 Kbps upstream, provisioning only			UEPBX	ADL22	0.00	0.00	0.00								
		Asymetric Digital Subscriber Line (ADSL) Service, Virtual Circuit Unspecified Bit Rate (UBR) with Data Rates from 1.5-1.8 Mbps downstream and from 512-768 Kbps upstream, provisioning only			UEPBX	ADL31	0.00	0.00	0.00								
		Asymetric Digital Subscriber Line (ADSL) Service, Virtual Circuit Unspecified Bit Rate (UBR) with Data Rates from 2.0 to 4.0 Mbps downstream and from 640 to 896 Kbps upstream, provisioning only			UEPBX	ADL41	0.00	0.00	0.00								
		Asymetric Digital Subscriber Line (ADSL) Service, Virtual Circuit Unspecified Bit Rate (UBR) with Data Rates from 4.0 to 6.0 Mbps downstream and from 640 Kbps to 896 Kbps upstream, provisioning only			UEPBX	ADL51	0.00	0.00	0.00								
		Asymetric Digital Subscriber Line (ADSL) Service, Virtual Circuit Unspecified Bit Rate (UBR) with Data Rates at least 768 Kbps downstream and 512 Kbps upstream, provisioning only			UEPBX	ADL61	0.00	0.00	0.00								
		Asymetric Digital Subscriber Line (ADSL) Service, Symmetric Virtual Circuit with upstream and downstream data rates of at least 192 Kbps, provisioning only			UEPBX	ADL71	0.00	0.00	0.00								
UNBUNDLED PORT LOOP COMBINATIONS - MARKET RATES																	
	BellSouth ADSL (RES)																
		Asymetric Digital Subscriber Line (ADSL) Service, Virtual Circuit with data rates up to 1.5 Mbps downstream and up to 256 Kbps upstream via integrated fiber facilities, provisioning only, no rate			UEPRX	ADLAA	0.00	0.00	0.00								
		Asymetric Digital Subscriber Line (ADSL) Service, provisioning only, non-rated, identifies virtual circuits (vc) with multiple destination capability, 1 destination			UEPRX	ADLB1	0.00	0.00	0.00								
		Asymetric Digital Subscriber Line (ADSL) Service, provisioning only, non-rated, identifies virtual circuits (vc) with multiple destination capability, 2 destinations			UEPRX	ADLB2	0.00	0.00	0.00								
		Asymetric Digital Subscriber Line (ADSL) Service, provisioning only, non-rated, identifies virtual circuits (vc) with multiple destination capability, 3 destinations			UEPRX	ADLB3	0.00	0.00	0.00								
		Asymetric Digital Subscriber Line (ADSL) Service, provisioning onlt, non-rated to assign outside plant facilities for the optical Network Unit (ONU) utilizing FITL-A technology			UEPRX	ADLPL	0.00	0.00	0.00								
		Asymetric Digital Subscriber Line (ADSL) Service, provisioning only, non-rated to identify a second, third or fourth virtual circuit associated with a first virtual circuit and a common Local Exchange Service			UEPRX	ADLVC	0.00	0.00	0.00								

UNBUNDLED NETWORK ELEMENTS - Louisiana														Attachment: 2		Exhibit: B	
CATEGORY		RATE ELEMENTS	Interim	Zone	BCS	USOC	RATES ($)					Svc Order Submitted Elec per LSR	Svc Order Submitted Manually per LSR	Incremental Charge - Manual Svc Order vs. Electronic-1st	Incremental Charge - Manual Svc Order vs. Electronic-Add'l	Incremental Charge - Manual Svc Order vs. Electronic-Disc 1st	Incremental Charge - Manual Svc Order vs. Electronic-Disc Add'l
							Rec	Nonrecurring		Nonrecurring Disconnect		OSS Rates($)					
								First	Add'l	First	Add'l	SOMEC	SOMAN	SOMAN	SOMAN	SOMAN	SOMAN
		Asymetric Digital Subscriber Line (ADSL) Service, ADSL virtual circuit with data rates up to 1.5 Mbps downstream and up to 256 Kbps upstream, provisioning only, zero rate			UEPRX	ADL11	0.00	0.00	0.00								
		Asymetric Digital Subscriber Line (ADSL) Service, Virtual Circuit Constant Bit Rate (CBR) with Data rates of 384 Kbps downstream and 384 Kbps upstream, provisioning only			UEPRX	ADL22	0.00	0.00	0.00								
		Asymetric Digital Subscriber Line (ADSL) Service, Virtual Circuit Unspecified Bit Rate (UBR) with Data Rates from 1.5-1.8 Mbps downstream and from 512-768 Kbps upstream, provisioning only			UEPRX	ADL31	0.00	0.00	0.00								
		Asymetric Digital Subscriber Line (ADSL) Service, Virtual Circuit Unspecified Bit Rate (UBR) with Data Rates from 2.0 to 4.0 Mbps downstream and from 640 to 896 Kbps upstream, provisioning only			UEPRX	ADL41	0.00	0.00	0.00								
		Asymetric Digital Subscriber Line (ADSL) Service, Virtual Circuit Unspecified Bit Rate (UBR) with Data Rates from 4.0 to 6.0 Mbps downstream and from 640 Kbps to 896 Kbps upstream, provisioning only			UEPRX	ADL51	0.00	0.00	0.00								
		Asymetric Digital Subscriber Line (ADSL) Service, Virtual Circuit Unspecified Bit Rate (UBR) with Data Rates at least 768 Kbps downstream and 512 Kbps upstream, provisioning only			UEPRX	ADL61	0.00	0.00	0.00								
		Asymetric Digital Subscriber Line (ADSL) Service, Symmetric Virtual Circuit with upstream and downstream data rates of at least 192 Kbps, provisioning only			UEPRX	ADL71	0.00	0.00	0.00								
	BellSouth ADSL (BUS)																
		Asymetric Digital Subscriber Line (ADSL) Service, Virtual Circuit with data rates up to 1.5 Mbps downstream and up to 256 Kbps upstream via integrated fiber facilities, provisioning only, no rate			UEPBX	ADLAA	0.00	0.00	0.00								
		Asymetric Digital Subscriber Line (ADSL) Service, provisioning only, non-rated, identifies virtual circuits (vc) with multiple destination capability, 1 destination			UEPBX	ADLB1	0.00	0.00	0.00								
		Asymetric Digital Subscriber Line (ADSL) Service, provisioning only, non-rated, identifies virtual circuits (vc) with multiple destination capability, 2 destinations			UEPBX	ADLB2	0.00	0.00	0.00								
		Asymetric Digital Subscriber Line (ADSL) Service, provisioning only, non-rated, identifies virtual circuits (vc) with multiple destination capability, 3 destinations			UEPBX	ADLB3	0.00	0.00	0.00								
		Asymetric Digital Subscriber Line (ADSL) Service, provisioning onlt, non-rated to assign outside plant facilities for the optical Network Unit (ONU) utilizing FITL-A technology			UEPBX	ADLPL	0.00	0.00	0.00								
		Asymetric Digital Subscriber Line (ADSL) Service, provisioning only, non-rated to identify a second, third or fourth virtual circuit associated with a first virtual circuit and a common Local Exchange Service			UEPBX	ADLVC	0.00	0.00	0.00								
		Asymetric Digital Subscriber Line (ADSL) Service, ADSL virtual circuit with data rates up to 1.5 Mbps downstream and up to 256 Kbps upstream, provisioning only, zero rate			UEPBX	ADL11	0.00	0.00	0.00								
		Asymetric Digital Subscriber Line (ADSL) Service, Virtual Circuit Constant Bit Rate (CBR) with Data rates of 384 Kbps downstream and 384 Kbps upstream, provisioning only			UEPBX	ADL22	0.00	0.00	0.00								
		Asymetric Digital Subscriber Line (ADSL) Service, Virtual Circuit Unspecified Bit Rate (UBR) with Data Rates from 1.5-1.8 Mbps downstream and from 512-768 Kbps upstream, provisioning only			UEPBX	ADL31	0.00	0.00	0.00								

UNBUNDLED NETWORK ELEMENTS - Louisiana														Attachment: 2		Exhibit: B	
CATEGORY		RATE ELEMENTS	Interim	Zone	BCS	USOC	RATES ($)					Svc Order Submitted Elec per LSR	Svc Order Submitted Manually per LSR	Incremental Charge - Manual Svc Order vs. Electronic-1st	Incremental Charge - Manual Svc Order vs. Electronic-Add'l	Incremental Charge - Manual Svc Order vs. Electronic-Disc 1st	Incremental Charge - Manual Svc Order vs. Electronic-Disc Add'l
							Rec	Nonrecurring		Nonrecurring Disconnect		OSS Rates($)					
								First	Add'l	First	Add'l	SOMEC	SOMAN	SOMAN	SOMAN	SOMAN	SOMAN
		Asymetric Digital Subscriber Line (ADSL) Service, Virtual Circuit Unspecified Bit Rate (UBR) with Data Rates from 2.0 to 4.0 Mbps downstream and from 640 to 896 Kbps upstream, provisioning only			UEPBX	ADL41	0.00	0.00	0.00								
		Asymetric Digital Subscriber Line (ADSL) Service, Virtual Circuit Unspecified Bit Rate (UBR) with Data Rates from 4.0 to 6.0 Mbps downstream and from 640 Kbps to 896 Kbps upstream, provisioning only			UEPBX	ADL51	0.00	0.00	0.00								
		Asymetric Digital Subscriber Line (ADSL) Service, Virtual Circuit Unspecified Bit Rate (UBR) with Data Rates at least 768 Kbps downstream and 512 Kbps upstream, provisioning only			UEPBX	ADL61	0.00	0.00	0.00								
		Asymetric Digital Subscriber Line (ADSL) Service, Symmetric Virtual Circuit with upstream and downstream data rates of at least 192 Kbps, provisioning only			UEPBX	ADL71	0.00	0.00	0.00								

Amendment to the Agreement
Between
Access Integrated Networks, Inc.
and
BellSouth Telecommunications, Inc.
Dated February 17, 2000

Pursuant to this Amendment, (the "Amendment"), Access Integrated Networks, Inc. (Access Integrated), and BellSouth Telecommunications, Inc. ("BellSouth"), hereinafter referred to collectively as the "Parties," hereby agree to amend that certain Interconnection Agreement between the Parties dated February 17, 2000 ("Agreement") to be effective upon the date of the last signature executing the Amendment.

WHEREAS, BellSouth and Access Integrated entered into the Agreement on February 17, 2000, and;

WHEREAS, BellSouth and Access Integrated desire to amend the Agreement to add additional rates, terms and conditions;

NOW THEREFORE, in consideration of the mutual provisions contained herein and other good and valuable consideration, the receipt and sufficiency of which are hereby acknowledged, the Parties hereby covenant and agree as follows:

1. The Parties agree to add to the rates as set forth in Exhibit C of Attachment 2, the rates as set forth in Amendment Exhibit 1 attached hereto and incorporated herein by this reference.

2. The Parties agree to add the following language to Attachment 2 of the Agreement as Section 2.1.13.1:

   > When a BellSouth technician is required to be dispatched to provision the Loop, BellSouth will tag the Loop with the Circuit ID number and the name of the ordering CLEC. When a dispatch is not required to provision the Loop, BellSouth will tag the Loop on the next required visit to the end user's location. If Access Integrated wants to ensure the Loop is tagged during the provisioning process for Loops that may not require a dispatch (e.g. UVL-SL1, UVL-SL2, UCL-ND, etc.), Access Integrated may order Loop Tagging. Rates for Loop Tagging are as set forth in Exhibit B of this Attachment.

3. All of the other provisions of the Agreement dated February 17, 2000 shall remain unchanged and in full force and effect.

4. Either or both of the Parties are authorized to submit this Amendment to the respective state regulatory authorities for approval subject to Section 252(e) of the Federal Telecommunications Act of 1996.

IN WITNESS WHEREOF, the Parties have caused this Amendment to be executed by their respective duly authorized representatives on the date indicated below.

BellSouth Telecommunications, Inc.

By: Pat C Finlen

Name: Patrick C. Finlen

Title: Asst Director

Date: 11/12/03

Access Integrated Networks, Inc.

By: W. T. Wright

Name: W. T. Wright

Title: Chairman

Date: 11-5-03

UNBUNDLED NETWORK ELEMENTS - Alabama														Attachment: 2		Exhibit: C	
CATEGORY	RATE ELEMENTS	Interim	Zone	BCS	USOC	RATES ($)					Svc Order Submitted Elec per LSR	Svc Order Submitted Manually per LSR	Incremental Charge - Manual Svc Order vs. Electronic- 1st	Incremental Charge - Manual Svc Order vs. Electronic- Add'l	Incremental Charge - Manual Svc Order vs. Electronic- Disc 1st	Incremental Charge - Manual Svc Order vs. Electronic- Disc Add'l
						Rec	Nonrecurring		Nonrecurring Disconnect		OSS Rates ($)					
							First	Add'l	First	Add'l	SOMEC	SOMAN	SOMAN	SOMAN	SOMAN	SOMAN
UNBUNDLED PORT/LOOP COMBINATIONS - COST BASED RATES																
2-WIRE VOICE GRADE LOOP WITH 2-WIRE LINE PORT (RES)																
ADDITIONAL NRCs																
	Unbundled Miscellaneous Rate Element, Tag Loop at End User Premise			UEPRX	URETL		8.33	0.83								
2-WIRE VOICE GRADE LOOP WITH 2-WIRE LINE PORT (BUS)																
ADDITIONAL NRCs																
	Unbundled Miscellaneous Rate Element, Tag Loop at End User Premise			UEPBX	URETL		8.33	0.83								
2-WIRE VOICE GRADE LOOP WITH 2-WIRE LINE PORT (RES - PBX)																
ADDITIONAL NRCs																
	Unbundled Miscellaneous Rate Element, Tag Loop at End User Premise			UEPRG	URETL		8.33	0.83								
2-WIRE VOICE GRADE LOOP WITH 2-WIRE LINE PORT (BUS - PBX)																
ADDITIONAL NRCs																
	Unbundled Miscellaneous Rate Element, Tag Loop at End User Premise			UEPPX	URETL		8.33	0.83								
2-WIRE VOICE GRADE LOOP WITH 2-WIRE ANALOG LINE COIN PORT																
ADDITIONAL NRCs																
	Unbundled Miscellaneous Rate Element, Tag Loop at End User Premise			UEPCO	URETL		8.33	0.83								
2-WIRE VOICE LOOP/ 2WIRE VOICE GRADE IO TRANSPORT/ 2-WIRE LINE PORT (RES)																
ADDITIONAL NRCs																
	Unbundled Miscellaneous Rate Element, Tag Designed Loop at End User Premise			UEPFR	URETN		11.21	1.10								
2-WIRE VOICE LOOP/ 2WIRE VOICE GRADE IO TRANSPORT/ 2-WIRE LINE PORT (BUS)																
ADDITIONAL NRCs																
	Unbundled Miscellaneous Rate Element, Tag Designed Loop at End User Premise			UEPFB	URETN		11.21	1.10								
2-WIRE VOICE LOOP/ 2WIRE VOICE GRADE IO TRANSPORT/ 2-WIRE LINE PORT (PBX)																
ADDITIONAL NRCs																
	Unbundled Miscellaneous Rate Element, Tag Designed Loop at End User Premise			UEPFP	URETN		11.21	1.10								
2-WIRE VOICE GRADE LOOP- BUS ONLY - WITH 2-WIRE DID TRUNK PORT																
ADDITIONAL NRCs																
	Unbundled Miscellaneous Rate Element, Tag Loop at End User Premise			UEPPX	URETN		11.21	1.10								
2-WIRE ISDN DIGITAL GRADE LOOP WITH 2-WIRE ISDN DIGITAL LINE SIDE PORT																
ADDITIONAL NRCs																
	Unbundled Miscellaneous Rate Element, Tag Loop at End User Premise			UEPPB UEPPR	URETL		8.33	0.83								
	Unbundled Miscellaneous Rate Element, Tag Design Loop at End Use Premise			UEPPB UEPPR	URETN		11.21	1.10								
UNBUNDLED CENTREX PORT/LOOP COMBINATIONS - COST BASED RATES																
UNE-P CENTREX - 1AESS - (Valid in AL,FL,GA,KY,LA,MS,&TN only)																
Additional Non-Recurring Charges (NRC)																
	Unbundled Miscellaneous Rate Element, Tag Loop at End Use Premise			UEP91	URETL		8.33	0.83								
	Unbundled Miscellaneous Rate Element, Tag Design Loop at End Use Premise			UEP91	URETN		11.21	1.10								

UNBUNDLED NETWORK ELEMENTS - Alabama														Attachment: 2		Exhibit: C	
CATEGORY		RATE ELEMENTS	Interim	Zone	BCS	USOC	RATES ($)					Svc Order Submitted Elec per LSR	Svc Order Submitted Manually per LSR	Incremental Charge - Manual Svc Order vs. Electronic- 1st	Incremental Charge - Manual Svc Order vs. Electronic- Add'l	Incremental Charge - Manual Svc Order vs. Electronic- Disc 1st	Incremental Charge - Manual Svc Order vs. Electronic- Disc Add'l
								Nonrecurring		Nonrecurring Disconnect		OSS Rates ($)					
							Rec										
								First	Add'l	First	Add'l	SOMEC	SOMAN	SOMAN	SOMAN	SOMAN	SOMAN
	UNE-P CENTREX - 5ESS (Valid in All States)																
	Additional Non-Recurring Charges (NRC)																
		Unbundled Miscellaneous Rate Element, Tag Loop at End Use Premise			UEP95	URETL		8.33	0.83								
		Unbundled Miscellaneous Rate Element, Tag Design Loop at End Use Premise			UEP95	URETN		11.21	1.10								
	UNE-P CENTREX - DMS100 (Valid in All States)																
	Additional Non-Recurring Charges (NRC)																
		Unbundled Miscellaneous Rate Element, Tag Loop at End Use Premise			UEP9D	URETL		8.33	0.83								
		Unbundled Miscellaneous Rate Element, Tag Design Loop at End Use Premise			UEP9D	URETN		11.21	1.10								
	UNE-P CENTREX - EWSD (Valid in AL, FL, KY, LA, MS & TN)																
	Additional Non-Recurring Charges (NRC)																
		Unbundled Miscellaneous Rate Element, Tag Loop at End Use Premise			UEP9E	URETL		8.33	0.83								
		Unbundled Miscellaneous Rate Element, Tag Design Loop at End Use Premise			UEP9E	URETN		11.21	1.10								
	UNE-P CENTREX - DCO - Valid in AL, KY, LA, MS, & TN)																
	Additional Non-Recurring Charges (NRC)																
		Unbundled Miscellaneous Rate Element, Tag Loop at End Use Premise			UEP93	URETL		8.33	0.83								
		Unbundled Miscellaneous Rate Element, Tag Design Loop at End Use Premise			UEP93	URETN		11.21	1.10								

UNBUNDLED NETWORK ELEMENTS - Florida														Attachment: 2		Exhibit: C	
CATEGORY	RATE ELEMENTS	Interim	Zone	BCS	USOC	RATES ($)					Svc Order Submitted Elec per LSR	Svc Order Submitted Manually per LSR	Incremental Charge - Manual Svc Order vs. Electronic- 1st	Incremental Charge - Manual Svc Order vs. Electronic- Add'l	Incremental Charge - Manual Svc Order vs. Electronic- Disc 1st	Incremental Charge - Manual Svc Order vs. Electronic- Disc Add'l
						Rec	Nonrecurring		Nonrecurring Disconnect		OSS Rates ($)					
							First	Add'l	First	Add'l	SOMEC	SOMAN	SOMAN	SOMAN	SOMAN	SOMAN
UNBUNDLED PORT/LOOP COMBINATIONS - COST BASED RATES																
2-WIRE VOICE GRADE LOOP WITH 2-WIRE LINE PORT (RES)																
ADDITIONAL NRCs																
	Unbundled Miscellaneous Rate Element, Tag Loop at End User Premise			UEPRX	URETL		8.33	0.83								
2-WIRE VOICE GRADE LOOP WITH 2-WIRE LINE PORT (BUS)																
ADDITIONAL NRCs																
	Unbundled Miscellaneous Rate Element, Tag Loop at End User Premise			UEPBX	URETL		8.33	0.83								
2-WIRE VOICE GRADE LOOP WITH 2-WIRE LINE PORT (RES - PBX)																
ADDITIONAL NRCs																
	Unbundled Miscellaneous Rate Element, Tag Loop at End User Premise			UEPRG	URETL		8.33	0.83								
2-WIRE VOICE GRADE LOOP WITH 2-WIRE LINE PORT (BUS - PBX)																
ADDITIONAL NRCs																
	Unbundled Miscellaneous Rate Element, Tag Loop at End User Premise			UEPPX	URETL		8.33	0.83								
2-WIRE VOICE GRADE LOOP WITH 2-WIRE ANALOG LINE COIN PORT																
ADDITIONAL NRCs																
	Unbundled Miscellaneous Rate Element, Tag Loop at End User Premise			UEPCO	URETL		8.33	0.83								
2-WIRE VOICE LOOP/ 2WIRE VOICE GRADE IO TRANSPORT/ 2-WIRE LINE PORT (RES)																
ADDITIONAL NRCs																
	Unbundled Miscellaneous Rate Element, Tag Designed Loop at End User Premise			UEPFR	URETN		11.21	1.10								
2-WIRE VOICE LOOP/ 2WIRE VOICE GRADE IO TRANSPORT/ 2-WIRE LINE PORT (BUS)																
ADDITIONAL NRCs																
	Unbundled Miscellaneous Rate Element, Tag Designed Loop at End User Premise			UEPFB	URETN		11.21	1.10								
2-WIRE VOICE LOOP/ 2WIRE VOICE GRADE IO TRANSPORT/ 2-WIRE LINE PORT (PBX)																
ADDITIONAL NRCs																
	Unbundled Miscellaneous Rate Element, Tag Designed Loop at End User Premise			UEPFP	URETN		11.21	1.10								
2-WIRE VOICE GRADE LOOP- BUS ONLY - WITH 2-WIRE DID TRUNK PORT																
ADDITIONAL NRCs																
	Unbundled Miscellaneous Rate Element, Tag Loop at End User Premise			UEPPX	URETN		11.21	1.10								
2-WIRE ISDN DIGITAL GRADE LOOP WITH 2-WIRE ISDN DIGITAL LINE SIDE PORT																
ADDITIONAL NRCs																
	Unbundled Miscellaneous Rate Element, Tag Loop at End User Premise			UEPPB UEPPR	URETL		8.33	0.83								
	Unbundled Miscellaneous Rate Element, Tag Design Loop at End Use Premise			UEPPB UEPPR	URETN		11.21	1.10								
UNBUNDLED CENTREX PORT/LOOP COMBINATIONS - COST BASED RATES																
UNE-P CENTREX - 1AESS - (Valid in AL,FL,GA,KY,LA,MS,&TN only)																
Additional Non-Recurring Charges (NRC)																
	Unbundled Miscellaneous Rate Element, Tag Loop at End Use Premise			UEP91	URETL		8.33	0.83								
	Unbundled Miscellaneous Rate Element, Tag Design Loop at End Use Premise			UEP91	URETN		11.21	1.10								

UNBUNDLED NETWORK ELEMENTS - Florida													Attachment: 2		Exhibit: C	
CATEGORY	RATE ELEMENTS	Interim	Zone	BCS	USOC	RATES ($)					Svc Order Submitted Elec per LSR	Svc Order Submitted Manually per LSR	Incremental Charge - Manual Svc Order vs. Electronic-1st	Incremental Charge - Manual Svc Order vs. Electronic-Add'l	Incremental Charge - Manual Svc Order vs. Electronic-Disc 1st	Incremental Charge - Manual Svc Order vs. Electronic-Disc Add'l
						Rec	Nonrecurring		Nonrecurring Disconnect		OSS Rates ($)					
							First	Add'l	First	Add'l	SOMEC	SOMAN	SOMAN	SOMAN	SOMAN	SOMAN
UNE-P CENTREX - 5ESS (Valid in All States)																
Additional Non-Recurring Charges (NRC)																
	Unbundled Miscellaneous Rate Element, Tag Loop at End Use Premise			UEP95	URETL		8.33	0.83								
	Unbundled Miscellaneous Rate Element, Tag Design Loop at End Use Premise			UEP95	URETN		11.21	1.10								
UNE-P CENTREX - DMS100 (Valid in All States)																
Additional Non-Recurring Charges (NRC)																
	Unbundled Miscellaneous Rate Element, Tag Loop at End Use Premise			UEP9D	URETL		8.33	0.83								
	Unbundled Miscellaneous Rate Element, Tag Design Loop at End Use Premise			UEP9D	URETN		11.21	1.10								
UNE-P CENTREX - EWSD (Valid in AL, FL, KY, LA, MS & TN)																
Additional Non-Recurring Charges (NRC)																
	Unbundled Miscellaneous Rate Element, Tag Loop at End Use Premise			UEP9E	URETL		8.33	0.83								
	Unbundled Miscellaneous Rate Element, Tag Design Loop at End Use Premise			UEP9E	URETN		11.21	1.10								
UNBUNDLED PORT LOOP COMBINATIONS - MARKET RATES																
2-WIRE VOICE GRADE LOOP WITH 2-WIRE LINE PORT (RES)																
ADDITIONAL NRCs																
	Unbundled Miscellaneous Rate Element, Tag Loop at End User Premise			UEPRX	URETL		8.33	0.83								
2-WIRE VOICE GRADE LOOP WITH 2-WIRE LINE PORT (BUS)																
ADDITIONAL NRCs																
	Unbundled Miscellaneous Rate Element, Tag Loop at End User Premise			UEPBX	URETL		8.33	0.83								
2-WIRE VOICE GRADE LOOP WITH 2-WIRE LINE PORT (RES - PBX)																
ADDITIONAL NRCs																
	Unbundled Miscellaneous Rate Element, Tag Loop at End User Premise			UEPRG	URETL		8.33	0.83								
2-WIRE VOICE GRADE LOOP WITH 2-WIRE LINE PORT (BUS - PBX)																
ADDITIONAL NRCs																
	Unbundled Miscellaneous Rate Element, Tag Loop at End User Premise			UEPPX	URETL		8.33	0.83								
2-WIRE VOICE GRADE LOOP WITH 2-WIRE ANALOG LINE COIN PORT																
ADDITIONAL NRCs																
	Unbundled Miscellaneous Rate Element, Tag Loop at End User Premise			UEPCO	URETL		8.33	0.83								
2-WIRE VOICE LOOP/ 2WIRE VOICE GRADE IO TRANSPORT/ 2-WIRE LINE PORT (RES)																
ADDITIONAL NRCs																
	Unbundled Miscellaneous Rate Element, Tag Designed Loop at End User Premise			UEPFR	URETN		11.21	1.10								
2-WIRE VOICE LOOP/ 2WIRE VOICE GRADE IO TRANSPORT/ 2-WIRE LINE PORT (BUS)																
ADDITIONAL NRCs																
	Unbundled Miscellaneous Rate Element, Tag Designed Loop at End User Premise			UEPFB	URETN		11.21	1.10								
2-WIRE VOICE LOOP/ 2WIRE VOICE GRADE IO TRANSPORT/ 2-WIRE LINE PORT (PBX)																
ADDITIONAL NRCs																
	Unbundled Miscellaneous Rate Element, Tag Designed Loop at End User Premise			UEPFP	URETN		11.21	1.10								
UNBUNDLED PORT/LOOP COMBINATIONS - MARKET BASED RATES																
2-WIRE VOICE GRADE LOOP- BUS ONLY - WITH 2-WIRE DID TRUNK PORT																
ADDITIONAL NRCs																
	Unbundled Miscellaneous Rate Element, Tag Loop at End User Premise			UEPPX	URETN		11.21	1.10								
2-WIRE ISDN DIGITAL GRADE LOOP WITH 2-WIRE ISDN DIGITAL LINE SIDE PORT																

UNBUNDLED NETWORK ELEMENTS - Florida														Attachment: 2		Exhibit: C	
CATEGORY		RATE ELEMENTS	Interim	Zone	BCS	USOC	RATES ($)					Svc Order Submitted Elec per LSR	Svc Order Submitted Manually per LSR	Incremental Charge - Manual Svc Order vs. Electronic-1st	Incremental Charge - Manual Svc Order vs. Electronic-Add'l	Incremental Charge - Manual Svc Order vs. Electronic-Disc 1st	Incremental Charge - Manual Svc Order vs. Electronic-Disc Add'l
							Rec	Nonrecurring		Nonrecurring Disconnect		OSS Rates ($)					
								First	Add'l	First	Add'l	SOMEC	SOMAN	SOMAN	SOMAN	SOMAN	SOMAN
	ADDITIONAL NRCs																
		Unbundled Miscellaneous Rate Element, Tag Loop at End User Premise			UEPPB UEPPR	URETL		8.33	0.83								
		Unbundled Miscellaneous Rate Element, Tag Designed Loop at End User Premise			UEPPB UEPPR	URETN		11.21	1.10								
UNBUNDLED CENTREX PORT/LOOP COMBINATIONS - MARKET RATES																	
	UNE-P CENTREX - 1AESS - (Valid in AL,FL,GA,KY,LA,MS,&TN only)																
	Additional Non-Recurring Charges (NRC)																
		Unbundled Miscellaneous Rate Element, Tag Loop at End Use Premise			UEP91	URETL		8.33	0.83								
		Unbundled Miscellaneous Rate Element, Tag Design Loop at End Use Premise			UEP91	URETN		11.21	1.10								
	UNE-P CENTREX - 5ESS (Valid in All States)																
	Additional Non-Recurring Charges (NRC)																
		Unbundled Miscellaneous Rate Element, Tag Loop at End Use Premise			UEP95	URETL		8.33	0.83								
		Unbundled Miscellaneous Rate Element, Tag Design Loop at End Use Premise			UEP95	URETN		11.21	1.10								
	UNE-P CENTREX - DMS100 (Valid in All States)																
	Additional Non-Recurring Charges (NRC)																
		Unbundled Miscellaneous Rate Element, Tag Loop at End Use Premise			UEP9D	URETL		8.33	0.83								
		Unbundled Miscellaneous Rate Element, Tag Design Loop at End Use Premise			UEP9D	URETN		11.21	1.10								
	UNE-P CENTREX - EWSD (Valid in AL, FL, KY, LA, MS & TN)																
	Additional Non-Recurring Charges (NRC)																
		Unbundled Miscellaneous Rate Element, Tag Loop at End Use Premise			UEP9E	URETL		8.33	0.83								
		Unbundled Miscellaneous Rate Element, Tag Design Loop at End Use Premise			UEP9E	URETN		11.21	1.10								

UNBUNDLED NETWORK ELEMENTS - Georgia														Attachment: 2		Exhibit: C	
CATEGORY		RATE ELEMENTS	Interim	Zone	BCS	USOC	RATES ($)					Svc Order Submitted Elec per LSR	Svc Order Submitted Manually per LSR	Incremental Charge - Manual Svc Order vs. Electronic-1st	Incremental Charge - Manual Svc Order vs. Electronic-Add'l	Incremental Charge - Manual Svc Order vs. Electronic-Disc 1st	Incremental Charge - Manual Svc Order vs. Electronic-Disc Add'l
								Nonrecurring		Nonrecurring Disconnect		OSS Rates ($)					
							Rec										
								First	Add'l	First	Add'l	SOMEC	SOMAN	SOMAN	SOMAN	SOMAN	SOMAN
UNBUNDLED PORT/LOOP COMBINATIONS - COST BASED RATES																	
	2-WIRE VOICE GRADE LOOP WITH 2-WIRE LINE PORT (RES)																
	ADDITIONAL NRCs																
		Unbundled Miscellaneous Rate Element, Tag Loop at End User Premise			UEPRX	URETL		12.97	1.44								
	2-WIRE VOICE GRADE LOOP WITH 2-WIRE LINE PORT (BUS)																
	ADDITIONAL NRCs																
		Unbundled Miscellaneous Rate Element, Tag Loop at End User Premise			UEPBX	URETL		12.97	1.44								
	2-WIRE VOICE GRADE LOOP WITH 2-WIRE LINE PORT (RES - PBX)																
	ADDITIONAL NRCs																
		Unbundled Miscellaneous Rate Element, Tag Loop at End User Premise			UEPRG	URETL		12.97	1.44								
	2-WIRE VOICE GRADE LOOP WITH 2-WIRE LINE PORT (BUS - PBX)																
	ADDITIONAL NRCs																
		Unbundled Miscellaneous Rate Element, Tag Loop at End User Premise			UEPPX	URETL		12.97	1.44								
	2-WIRE VOICE GRADE LOOP WITH 2-WIRE ANALOG LINE COIN PORT																
	ADDITIONAL NRCs																
		Unbundled Miscellaneous Rate Element, Tag Loop at End User Premise			UEPCO	URETL		12.97	1.44								
	2-WIRE VOICE LOOP/ 2WIRE VOICE GRADE IO TRANSPORT/ 2-WIRE LINE PORT (RES)																
	ADDITIONAL NRCs																
		Unbundled Miscellaneous Rate Element, Tag Designed Loop at End User Premise			UEPFR	URETN		16.40	1.44								
	2-WIRE VOICE LOOP/ 2WIRE VOICE GRADE IO TRANSPORT/ 2-WIRE LINE PORT (BUS)																
	ADDITIONAL NRCs																
		Unbundled Miscellaneous Rate Element, Tag Designed Loop at End User Premise			UEPFB	URETN		16.40	1.44								
	2-WIRE VOICE LOOP/ 2WIRE VOICE GRADE IO TRANSPORT/ 2-WIRE LINE PORT (PBX)																
	ADDITIONAL NRCs																
		Unbundled Miscellaneous Rate Element, Tag Designed Loop at End User Premise			UEPFP	URETN		16.40	1.44								
	2-WIRE VOICE GRADE LOOP- BUS ONLY - WITH 2-WIRE DID TRUNK PORT																
	ADDITIONAL NRCs																
		Unbundled Miscellaneous Rate Element, Tag Loop at End User Premise			UEPPX	URETN		16.40	1.44								
	2-WIRE ISDN DIGITAL GRADE LOOP WITH 2-WIRE ISDN DIGITAL LINE SIDE PORT																
	ADDITIONAL NRCs																
		Unbundled Miscellaneous Rate Element, Tag Loop at End User Premise			UEPPB UEPPR	URETL		12.97	1.44								
		Unbundled Miscellaneous Rate Element, Tag Design Loop at End Use Premise			UEPPB UEPPR	URETN		16.40	1.44								
UNBUNDLED CENTREX PORT/LOOP COMBINATIONS - COST BASED RATES																	
	UNE-P CENTREX - 1AESS - (Valid in AL,FL,GA,KY,LA,MS,&TN only)																
	Additional Non-Recurring Charges (NRC)																
		Unbundled Miscellaneous Rate Element, Tag Loop at End Use Premise			UEP91	URETL		12.97	1.44								
		Unbundled Miscellaneous Rate Element, Tag Design Loop at End Use Premise			UEP91	URETN		16.40	1.44								

UNBUNDLED NETWORK ELEMENTS - Georgia														Attachment: 2		Exhibit: C	
CATEGORY	RATE ELEMENTS	Interim	Zone	BCS	USOC	RATES ($)					Svc Order Submitted Elec per LSR	Svc Order Submitted Manually per LSR	Incremental Charge - Manual Svc Order vs. Electronic-1st	Incremental Charge - Manual Svc Order vs. Electronic-Add'l	Incremental Charge - Manual Svc Order vs. Electronic-Disc 1st	Incremental Charge - Manual Svc Order vs. Electronic-Disc Add'l
						Rec	Nonrecurring		Nonrecurring Disconnect		OSS Rates ($)					
							First	Add'l	First	Add'l	SOMEC	SOMAN	SOMAN	SOMAN	SOMAN	SOMAN
	UNE-P CENTREX - 5ESS (Valid in All States)															
	Additional Non-Recurring Charges (NRC)															
	Unbundled Miscellaneous Rate Element, Tag Loop at End Use Premise			UEP95	URETL		12.97	1.44								
	Unbundled Miscellaneous Rate Element, Tag Design Loop at End Use Premise			UEP95	URETN		16.40	1.44								
	UNE-P CENTREX - DMS100 (Valid in All States)															
	Additional Non-Recurring Charges (NRC)															
	Unbundled Miscellaneous Rate Element, Tag Loop at End Use Premise			UEP9D	URETL		12.97	1.44								
	Unbundled Miscellaneous Rate Element, Tag Design Loop at End Use Premise			UEP9D	URETN		16.40	1.44								
UNBUNDLED PORT LOOP COMBINATIONS - MARKET RATES																
	2-WIRE VOICE GRADE LOOP WITH 2-WIRE LINE PORT (RES)															
	ADDITIONAL NRCs															
	Unbundled Miscellaneous Rate Element, Tag Loop at End User Premise			UEPRX	URETL		12.97	1.44								
	2-WIRE VOICE GRADE LOOP WITH 2-WIRE LINE PORT (BUS)															
	ADDITIONAL NRCs															
	Unbundled Miscellaneous Rate Element, Tag Loop at End User Premise			UEPBX	URETL		12.97	1.44								
	2-WIRE VOICE GRADE LOOP WITH 2-WIRE LINE PORT (RES - PBX)															
	ADDITIONAL NRCs															
	Unbundled Miscellaneous Rate Element, Tag Loop at End User Premise			UEPRG	URETL		12.97	1.44								
	2-WIRE VOICE GRADE LOOP WITH 2-WIRE LINE PORT (BUS - PBX)															
	ADDITIONAL NRCs															
	Unbundled Miscellaneous Rate Element, Tag Loop at End User Premise			UEPPX	URETL		12.97	1.44								
	2-WIRE VOICE GRADE LOOP WITH 2-WIRE ANALOG LINE COIN PORT															
	ADDITIONAL NRCs															
	Unbundled Miscellaneous Rate Element, Tag Loop at End User Premise			UEPCO	URETL		12.97	1.44								
	2-WIRE VOICE LOOP/ 2WIRE VOICE GRADE IO TRANSPORT/ 2-WIRE LINE PORT (RES)															
	ADDITIONAL NRCs															
	Unbundled Miscellaneous Rate Element, Tag Designed Loop at End User Premise			UEPFR	URETN		16.40	1.44								
	2-WIRE VOICE LOOP/ 2WIRE VOICE GRADE IO TRANSPORT/ 2-WIRE LINE PORT (BUS)															
	ADDITIONAL NRCs															
	Unbundled Miscellaneous Rate Element, Tag Designed Loop at End User Premise			UEPFB	URETN		16.40	1.44								
	2-WIRE VOICE LOOP/ 2WIRE VOICE GRADE IO TRANSPORT/ 2-WIRE LINE PORT (PBX)															
	ADDITIONAL NRCs															
	Unbundled Miscellaneous Rate Element, Tag Designed Loop at End User Premise			UEPFP	URETN		16.40	1.44								
UNBUNDLED PORT/LOOP COMBINATIONS - MARKET BASED RATES																
	2-WIRE VOICE GRADE LOOP- BUS ONLY - WITH 2-WIRE DID TRUNK PORT															
	ADDITIONAL NRCs															
	Unbundled Miscellaneous Rate Element, Tag Loop at End User Premise			UEPPX	URETN		16.40	1.44								
UNBUN	**2-WIRE ISDN DIGITAL GRADE LOOP WITH 2-WIRE ISDN DIGITAL LINE SIDE PORT**															
	ADDITIONAL NRCs															
	Unbundled Miscellaneous Rate Element, Tag Loop at End User Premise			UEPPB UEPPR	URETL		12.97	1.44								
	Unbundled Miscellaneous Rate Element, Tag Designed Loop at End User Premise			UEPPB UEPPR	URETN		16.40	1.44								
UNBUNDLED CENTREX PORT/LOOP COMBINATIONS - MARKET RATES																

UNBUNDLED NETWORK ELEMENTS - Georgia													Attachment: 2		Exhibit: C	
CATEGORY		RATE ELEMENTS	Interim	Zone	BCS	USOC	RATES ($)				Svc Order Submitted Elec per LSR	Svc Order Submitted Manually per LSR	Incremental Charge - Manual Svc Order vs. Electronic-1st	Incremental Charge - Manual Svc Order vs. Electronic-Add'l	Incremental Charge - Manual Svc Order vs. Electronic-Disc 1st	Incremental Charge - Manual Svc Order vs. Electronic-Disc Add'l
							Rec	Nonrecurring		Nonrecurring Disconnect		OSS Rates ($)					
								First	Add'l	First	Add'l	SOMEC	SOMAN	SOMAN	SOMAN	SOMAN	SOMAN
	UNE-P CENTREX - 1AESS - (Valid in AL,FL,GA,KY,LA,MS,&TN only)																
	Additional Non-Recurring Charges (NRC)																
		Unbundled Miscellaneous Rate Element, Tag Loop at End Use Premise			UEP91	URETL		12.97	1.44								
		Unbundled Miscellaneous Rate Element, Tag Design Loop at End Use Premise			UEP91	URETN		16.40	1.44								
	UNE-P CENTREX - 5ESS (Valid in All States)																
	Additional Non-Recurring Charges (NRC)																
		Unbundled Miscellaneous Rate Element, Tag Loop at End Use Premise			UEP95	URETL		12.97	1.44								
		Unbundled Miscellaneous Rate Element, Tag Design Loop at End Use Premise			UEP95	URETN		16.40	1.44								
	UNE-P CENTREX - DMS100 (Valid in All States)																
	Additional Non-Recurring Charges (NRC)																
		Unbundled Miscellaneous Rate Element, Tag Loop at End Use Premise			UEP9D	URETL		12.97	1.44								
		Unbundled Miscellaneous Rate Element, Tag Design Loop at End Use Premise			UEP9D	URETN		16.40	1.44								

UNBUNDLED NETWORK ELEMENTS - Kentucky														Attachment: 2		Exhibit: C	
CATEGORY	RATE ELEMENTS	Interim	Zone	BCS	USOC	RATES ($)					Svc Order Submitted Elec per LSR	Svc Order Submitted Manually per LSR	Incremental Charge - Manual Svc Order vs. Electronic-1st	Incremental Charge - Manual Svc Order vs. Electronic-Add'l	Incremental Charge - Manual Svc Order vs. Electronic-Disc 1st	Incremental Charge - Manual Svc Order vs. Electronic-Disc Add'l
						Rec	Nonrecurring		Nonrecurring Disconnect		OSS Rates ($)					
							First	Add'l	First	Add'l	SOMEC	SOMAN	SOMAN	SOMAN	SOMAN	SOMAN
UNBUNDLED PORT/LOOP COMBINATIONS - COST BASED RATES																
2-WIRE VOICE GRADE LOOP WITH 2-WIRE LINE PORT (RES)																
ADDITIONAL NRCs																
	Unbundled Miscellaneous Rate Element, Tag Loop at End User Premise			UEPRX	URETL		12.88	1.43								
2-WIRE VOICE GRADE LOOP WITH 2-WIRE LINE PORT (BUS)																
ADDITIONAL NRCs																
	Unbundled Miscellaneous Rate Element, Tag Loop at End User Premise			UEPBX	URETL		12.88	1.43								
2-WIRE VOICE GRADE LOOP WITH 2-WIRE LINE PORT (RES - PBX)																
ADDITIONAL NRCs																
	Unbundled Miscellaneous Rate Element, Tag Loop at End User Premise			UEPRG	URETL		12.88	1.43								
2-WIRE VOICE GRADE LOOP WITH 2-WIRE LINE PORT (BUS - PBX)																
ADDITIONAL NRCs																
	Unbundled Miscellaneous Rate Element, Tag Loop at End User Premise			UEPPX	URETL		12.88	1.43								
2-WIRE VOICE GRADE LOOP WITH 2-WIRE ANALOG LINE COIN PORT																
ADDITIONAL NRCs																
	Unbundled Miscellaneous Rate Element, Tag Loop at End User Premise			UEPCO	URETL		12.88	1.43								
2-WIRE VOICE LOOP/ 2WIRE VOICE GRADE IO TRANSPORT/ 2-WIRE LINE PORT (RES)																
ADDITIONAL NRCs																
	Unbundled Miscellaneous Rate Element, Tag Designed Loop at End User Premise			UEPFR	URETN		19.57	1.72								
2-WIRE VOICE LOOP/ 2WIRE VOICE GRADE IO TRANSPORT/ 2-WIRE LINE PORT (BUS)																
ADDITIONAL NRCs																
	Unbundled Miscellaneous Rate Element, Tag Designed Loop at End User Premise			UEPFB	URETN		19.57	1.72								
2-WIRE VOICE LOOP/ 2WIRE VOICE GRADE IO TRANSPORT/ 2-WIRE LINE PORT (PBX)																
ADDITIONAL NRCs																
	Unbundled Miscellaneous Rate Element, Tag Designed Loop at End User Premise			UEPFP	URETN		19.57	1.72								
2-WIRE VOICE GRADE LOOP- BUS ONLY - WITH 2-WIRE DID TRUNK PORT																
ADDITIONAL NRCs																
	Unbundled Miscellaneous Rate Element, Tag Loop at End User Premise			UEPPX	URETN		19.57	1.72								
2-WIRE ISDN DIGITAL GRADE LOOP WITH 2-WIRE ISDN DIGITAL LINE SIDE PORT																
ADDITIONAL NRCs																
	Unbundled Miscellaneous Rate Element, Tag Loop at End User Premise			UEPPB UEPPR	URETL		12.88	1.43								
	Unbundled Miscellaneous Rate Element, Tag Design Loop at End Use Premise			UEPPB UEPPR	URETN		19.57	1.72								
UNBUNDLED CENTREX PORT/LOOP COMBINATIONS - COST BASED RATES																
UNE-P CENTREX - 1AESS - (Valid in AL,FL,GA,KY,LA,MS,&TN only)																
Additional Non-Recurring Charges (NRC)																
	Unbundled Miscellaneous Rate Element, Tag Loop at End Use Premise			UEP91	URETL		12.88	1.43								
	Unbundled Miscellaneous Rate Element, Tag Design Loop at End Use Premise			UEP91	URETN		19.57	1.72								

UNBUNDLED NETWORK ELEMENTS - Kentucky														Attachment: 2		Exhibit: C	
CATEGORY		RATE ELEMENTS	Interim	Zone	BCS	USOC	RATES ($)					Svc Order Submitted Elec per LSR	Svc Order Submitted Manually per LSR	Incremental Charge - Manual Svc Order vs. Electronic-1st	Incremental Charge - Manual Svc Order vs. Electronic-Add'l	Incremental Charge - Manual Svc Order vs. Electronic-Disc 1st	Incremental Charge - Manual Svc Order vs. Electronic-Disc Add'l
							Rec	Nonrecurring		Nonrecurring Disconnect		OSS Rates ($)					
								First	Add'l	First	Add'l	SOMEC	SOMAN	SOMAN	SOMAN	SOMAN	SOMAN
	UNE-P CENTREX - 5ESS (Valid in All States)																
	Additional Non-Recurring Charges (NRC)																
		Unbundled Miscellaneous Rate Element, Tag Loop at End Use Premise			UEP95	URETL		12.88	1.43								
		Unbundled Miscellaneous Rate Element, Tag Design Loop at End Use Premise			UEP95	URETN		19.57	1.72								
	UNE-P CENTREX - DMS100 (Valid in All States)																
	Additional Non-Recurring Charges (NRC)																
		Unbundled Miscellaneous Rate Element, Tag Loop at End Use Premise			UEP9D	URETL		12.88	1.43								
		Unbundled Miscellaneous Rate Element, Tag Design Loop at End Use Premise			UEP9D	URETN		19.57	1.72								
	UNE-P CENTREX - EWSD (Valid in AL, FL, KY, LA, MS & TN)																
	Additional Non-Recurring Charges (NRC)																
		Unbundled Miscellaneous Rate Element, Tag Loop at End Use Premise			UEP9E	URETL		12.88	1.43								
		Unbundled Miscellaneous Rate Element, Tag Design Loop at End Use Premise			UEP9E	URETN		19.57	1.72								
	UNE-P CENTREX - DCO - Valid in AL, KY, LA, MS, & TN)																
	Additional Non-Recurring Charges (NRC)																
		Unbundled Miscellaneous Rate Element, Tag Loop at End Use Premise			UEP93	URETL		12.88	1.43								
		Unbundled Miscellaneous Rate Element, Tag Design Loop at End Use Premise			UEP93	URETN		19.57	1.72								

UNBUNDLED NETWORK ELEMENTS - Kentucky														Attachment: 2		Exhibit: C	
CATEGORY		RATE ELEMENTS	Interim	Zone	BCS	USOC	RATES ($)					Svc Order Submitted Elec per LSR	Svc Order Submitted Manually per LSR	Incremental Charge - Manual Svc Order vs. Electronic-1st	Incremental Charge - Manual Svc Order vs. Electronic-Add'l	Incremental Charge - Manual Svc Order vs. Electronic-Disc 1st	Incremental Charge - Manual Svc Order vs. Electronic-Disc Add'l
								Nonrecurring		Nonrecurring Disconnect		OSS Rates ($)					
							Rec										
								First	Add'l	First	Add'l	SOMEC	SOMAN	SOMAN	SOMAN	SOMAN	SOMAN

UNBUNDLED NETWORK ELEMENTS - Louisiana														Attachment: 2		Exhibit: C	
CATEGORY	RATE ELEMENTS	Interim	Zone	BCS	USOC	RATES ($)					Svc Order Submitted Elec per LSR	Svc Order Submitted Manually per LSR	Incremental Charge - Manual Svc Order vs. Electronic- 1st	Incremental Charge - Manual Svc Order vs. Electronic- Add'l	Incremental Charge - Manual Svc Order vs. Electronic- Disc 1st	Incremental Charge - Manual Svc Order vs. Electronic- Disc Add'l
						Rec	Nonrecurring		Nonrecurring Disconnect		OSS Rates ($)					
							First	Add'l	First	Add'l	SOMEC	SOMAN	SOMAN	SOMAN	SOMAN	SOMAN
UNBUNDLED PORT/LOOP COMBINATIONS - COST BASED RATES																
2-WIRE VOICE GRADE LOOP WITH 2-WIRE LINE PORT (RES)																
ADDITIONAL NRCs																
	Unbundled Miscellaneous Rate Element, Tag Loop at End User Premise			UEPRX	URETL		8.33	0.83								
2-WIRE VOICE GRADE LOOP WITH 2-WIRE LINE PORT (BUS)																
ADDITIONAL NRCs																
	Unbundled Miscellaneous Rate Element, Tag Loop at End User Premise			UEPBX	URETL		8.33	0.83								
2-WIRE VOICE GRADE LOOP WITH 2-WIRE LINE PORT (RES - PBX)																
ADDITIONAL NRCs																
	Unbundled Miscellaneous Rate Element, Tag Loop at End User Premise			UEPRG	URETL		8.33	0.83								
2-WIRE VOICE GRADE LOOP WITH 2-WIRE LINE PORT (BUS - PBX)																
ADDITIONAL NRCs																
	Unbundled Miscellaneous Rate Element, Tag Loop at End User Premise			UEPPX	URETL		8.33	0.83								
2-WIRE VOICE GRADE LOOP WITH 2-WIRE ANALOG LINE COIN PORT																
ADDITIONAL NRCs																
	Unbundled Miscellaneous Rate Element, Tag Loop at End User Premise			UEPCO	URETL		8.33	0.83								
2-WIRE VOICE LOOP/ 2WIRE VOICE GRADE IO TRANSPORT/ 2-WIRE LINE PORT (RES)																
ADDITIONAL NRCs																
	Unbundled Miscellaneous Rate Element, Tag Designed Loop at End User Premise			UEPFR	URETN		11.20	1.10								
2-WIRE VOICE LOOP/ 2WIRE VOICE GRADE IO TRANSPORT/ 2-WIRE LINE PORT (BUS)																
ADDITIONAL NRCs																
	Unbundled Miscellaneous Rate Element, Tag Designed Loop at End User Premise			UEPFB	URETN		11.20	1.10								
2-WIRE VOICE LOOP/ 2WIRE VOICE GRADE IO TRANSPORT/ 2-WIRE LINE PORT (PBX)																
ADDITIONAL NRCs																
	Unbundled Miscellaneous Rate Element, Tag Designed Loop at End User Premise			UEPFP	URETN		11.20	1.10								
2-WIRE VOICE GRADE LOOP- BUS ONLY - WITH 2-WIRE DID TRUNK PORT																
ADDITIONAL NRCs																
	Unbundled Miscellaneous Rate Element, Tag Loop at End User Premise			UEPPX	URETN		11.20	1.10								
2-WIRE ISDN DIGITAL GRADE LOOP WITH 2-WIRE ISDN DIGITAL LINE SIDE PORT																
ADDITIONAL NRCs																
	Unbundled Miscellaneous Rate Element, Tag Loop at End User Premise			UEPPB UEPPR	URETL		8.33	0.83								
	Unbundled Miscellaneous Rate Element, Tag Design Loop at End Use Premise			UEPPB UEPPR	URETN		11.20	1.10								
UNBUNDLED CENTREX PORT/LOOP COMBINATIONS - COST BASED RATES																
UNE-P CENTREX - 1AESS - (Valid in AL,FL,GA,KY,LA,MS,&TN only)																
Additional Non-Recurring Charges (NRC)																
	Unbundled Miscellaneous Rate Element, Tag Loop at End Use Premise			UEP91	URETL		8.33	0.83								
	Unbundled Miscellaneous Rate Element, Tag Design Loop at End Use Premise			UEP91	URETN		11.20	1.10								

UNBUNDLED NETWORK ELEMENTS - Louisiana														Attachment: 2		Exhibit: C	
CATEGORY	RATE ELEMENTS	Interim	Zone	BCS	USOC	RATES ($)					Svc Order Submitted Elec per LSR	Svc Order Submitted Manually per LSR	Incremental Charge - Manual Svc Order vs. Electronic-1st	Incremental Charge - Manual Svc Order vs. Electronic-Add'l	Incremental Charge - Manual Svc Order vs. Electronic-Disc 1st	Incremental Charge - Manual Svc Order vs. Electronic-Disc Add'l
						Rec	Nonrecurring		Nonrecurring Disconnect		OSS Rates ($)					
							First	Add'l	First	Add'l	SOMEC	SOMAN	SOMAN	SOMAN	SOMAN	SOMAN
	UNE-P CENTREX - 5ESS (Valid in All States)															
	Additional Non-Recurring Charges (NRC)															
	Unbundled Miscellaneous Rate Element, Tag Loop at End Use Premise			UEP95	URETL		8.33	0.83								
	Unbundled Miscellaneous Rate Element, Tag Design Loop at End Use Premise			UEP95	URETN		11.20	1.10								
	UNE-P CENTREX - DMS100 (Valid in All States)															
	Additional Non-Recurring Charges (NRC)															
	Unbundled Miscellaneous Rate Element, Tag Loop at End Use Premise			UEP9D	URETL		8.33	0.83								
	Unbundled Miscellaneous Rate Element, Tag Design Loop at End Use Premise			UEP9D	URETN		11.20	1.10								
	UNE-P CENTREX - EWSD (Valid in AL, FL, KY, LA, MS & TN)															
	Additional Non-Recurring Charges (NRC)															
	Unbundled Miscellaneous Rate Element, Tag Loop at End Use Premise			UEP9E	URETL		8.33	0.83								
	Unbundled Miscellaneous Rate Element, Tag Design Loop at End Use Premise			UEP9E	URETN		11.20	1.10								
	UNE-P CENTREX - DCO - Valid in AL, KY, LA, MS, & TN)															
	Additional Non-Recurring Charges (NRC)															
	Unbundled Miscellaneous Rate Element, Tag Loop at End Use Premise			UEP93	URETL		8.33	0.83								
	Unbundled Miscellaneous Rate Element, Tag Design Loop at End Use Premise			UEP93	URETN		11.20	1.10								
UNBUNDLED PORT LOOP COMBINATIONS - MARKET RATES																
	2-WIRE VOICE GRADE LOOP WITH 2-WIRE LINE PORT (RES)															
	ADDITIONAL NRCs															
	Unbundled Miscellaneous Rate Element, Tag Loop at End User Premise			UEPRX	URETL		8.33	0.83								
	2-WIRE VOICE GRADE LOOP WITH 2-WIRE LINE PORT (BUS)															
	ADDITIONAL NRCs															
	Unbundled Miscellaneous Rate Element, Tag Loop at End User Premise			UEPBX	URETL		8.33	0.83								
	2-WIRE VOICE GRADE LOOP WITH 2-WIRE LINE PORT (RES - PBX)															
	ADDITIONAL NRCs															
	Unbundled Miscellaneous Rate Element, Tag Loop at End User Premise			UEPRG	URETL		8.33	0.83								
	2-WIRE VOICE GRADE LOOP WITH 2-WIRE LINE PORT (BUS - PBX)															
	ADDITIONAL NRCs															
	Unbundled Miscellaneous Rate Element, Tag Loop at End User Premise			UEPPX	URETL		8.33	0.83								
	2-WIRE VOICE GRADE LOOP WITH 2-WIRE ANALOG LINE COIN PORT															
	ADDITIONAL NRCs															
	Unbundled Miscellaneous Rate Element, Tag Loop at End User Premise			UEPCO	URETL		8.33	0.83								
	2-WIRE VOICE LOOP/ 2WIRE VOICE GRADE IO TRANSPORT/ 2-WIRE LINE PORT (RES)															
	ADDITIONAL NRCs															
	Unbundled Miscellaneous Rate Element, Tag Designed Loop at End User Premise			UEPFR	URETN		11.20	1.10								
	2-WIRE VOICE LOOP/ 2WIRE VOICE GRADE IO TRANSPORT/ 2-WIRE LINE PORT (BUS)															
	ADDITIONAL NRCs															
UNBUNDLED P	Unbundled Miscellaneous Rate Element, Tag Designed Loop at End User Premise			UEPFB	URETN		11.20	1.10								
	2-WIRE VOICE LOOP/ 2WIRE VOICE GRADE IO TRANSPORT/ 2-WIRE LINE PORT (PBX)															
	ADDITIONAL NRCs															
	Unbundled Miscellaneous Rate Element, Tag Designed Loop at End User Premise			UEPFP	URETN		11.20	1.10								

UNBUNDLED NETWORK ELEMENTS - Louisiana														Attachment: 2		Exhibit: C	
CATEGORY	RATE ELEMENTS	Interim	Zone	BCS	USOC	RATES ($)					Svc Order Submitted Elec per LSR	Svc Order Submitted Manually per LSR	Incremental Charge - Manual Svc Order vs. Electronic-1st	Incremental Charge - Manual Svc Order vs. Electronic-Add'l	Incremental Charge - Manual Svc Order vs. Electronic-Disc 1st	Incremental Charge - Manual Svc Order vs. Electronic-Disc Add'l
						Rec	Nonrecurring		Nonrecurring Disconnect		OSS Rates ($)					
							First	Add'l	First	Add'l	SOMEC	SOMAN	SOMAN	SOMAN	SOMAN	SOMAN
UNBUNDLED PORT/LOOP COMBINATIONS - MARKET BASED RATES																
	2-WIRE VOICE GRADE LOOP- BUS ONLY - WITH 2-WIRE DID TRUNK PORT															
	ADDITIONAL NRCs															
	Unbundled Miscellaneous Rate Element, Tag Loop at End User Premise			UEPPX	URETN		11.20	1.10								
UNBUN	2-WIRE ISDN DIGITAL GRADE LOOP WITH 2-WIRE ISDN DIGITAL LINE SIDE PORT															
	ADDITIONAL NRCs															
	Unbundled Miscellaneous Rate Element, Tag Loop at End User Premise			UEPPB UEPPR	URETL		8.33	0.83								
	Unbundled Miscellaneous Rate Element, Tag Designed Loop at End User Premise			UEPPB UEPPR	URETN		11.20	1.10								
UNBUNDLED CENTREX PORT/LOOP COMBINATIONS - MARKET RATES																
	UNE-P CENTREX - 1AESS - (Valid in AL,FL,GA,KY,LA,MS,&TN only)															
	Additional Non-Recurring Charges (NRC)															
	Unbundled Miscellaneous Rate Element, Tag Loop at End Use Premise			UEP91	URETL		8.33	0.83								
	Unbundled Miscellaneous Rate Element, Tag Design Loop at End Use Premise			UEP91	URETN		11.20	1.10								
	UNE-P CENTREX - 5ESS (Valid in All States)															
	Additional Non-Recurring Charges (NRC)															
	Unbundled Miscellaneous Rate Element, Tag Loop at End Use Premise			UEP95	URETL		8.33	0.83								
	Unbundled Miscellaneous Rate Element, Tag Design Loop at End Use Premise			UEP95	URETN		11.20	1.10								
	UNE-P CENTREX - DMS100 (Valid in All States)															
	Additional Non-Recurring Charges (NRC)															
	Unbundled Miscellaneous Rate Element, Tag Loop at End Use Premise			UEP9D	URETL		8.33	0.83								
	Unbundled Miscellaneous Rate Element, Tag Design Loop at End Use Premise			UEP9D	URETN		11.20	1.10								
	UNE-P CENTREX - EWSD (Valid in AL, FL, KY, LA, MS & TN)															
	Additional Non-Recurring Charges (NRC)															
	Unbundled Miscellaneous Rate Element, Tag Loop at End Use Premise			UEP9E	URETL		8.33	0.83								
	Unbundled Miscellaneous Rate Element, Tag Design Loop at End Use Premise			UEP9E	URETN		11.20	1.10								
	UNE-P CENTREX - DCO - Valid in AL, KY, LA, MS, & TN)															
	Additional Non-Recurring Charges (NRC)															
	Unbundled Miscellaneous Rate Element, Tag Loop at End Use Premise			UEP93	URETL		8.33	0.83								
	Unbundled Miscellaneous Rate Element, Tag Design Loop at End Use Premise			UEP93	URETN		11.20	1.10								

UNBUNDLED NETWORK ELEMENTS - Mississippi														Attachment: 2		Exhibit: C	
CATEGORY	RATE ELEMENTS	Interim	Zone	BCS	USOC	RATES ($)					Svc Order Submitted Elec per LSR	Svc Order Submitted Manually per LSR	Incremental Charge - Manual Svc Order vs. Electronic- 1st	Incremental Charge - Manual Svc Order vs. Electronic- Add'l	Incremental Charge - Manual Svc Order vs. Electronic- Disc 1st	Incremental Charge - Manual Svc Order vs. Electronic- Disc Add'l
						Rec	Nonrecurring		Nonrecurring Disconnect		OSS Rates ($)					
							First	Add'l	First	Add'l	SOMEC	SOMAN	SOMAN	SOMAN	SOMAN	SOMAN
UNBUNDLED PORT/LOOP COMBINATIONS - COST BASED RATES																
2-WIRE VOICE GRADE LOOP WITH 2-WIRE LINE PORT (RES)																
ADDITIONAL NRCs																
	Unbundled Miscellaneous Rate Element, Tag Loop at End User Premise			UEPRX	URETL		8.33	0.83								
2-WIRE VOICE GRADE LOOP WITH 2-WIRE LINE PORT (BUS)																
ADDITIONAL NRCs																
	Unbundled Miscellaneous Rate Element, Tag Loop at End User Premise			UEPBX	URETL		8.33	0.83								
2-WIRE VOICE GRADE LOOP WITH 2-WIRE LINE PORT (RES - PBX)																
ADDITIONAL NRCs																
	Unbundled Miscellaneous Rate Element, Tag Loop at End User Premise			UEPRG	URETL		8.33	0.83								
2-WIRE VOICE GRADE LOOP WITH 2-WIRE LINE PORT (BUS - PBX)																
ADDITIONAL NRCs																
	Unbundled Miscellaneous Rate Element, Tag Loop at End User Premise			UEPPX	URETL		8.33	0.83								
2-WIRE VOICE GRADE LOOP WITH 2-WIRE ANALOG LINE COIN PORT																
ADDITIONAL NRCs																
	Unbundled Miscellaneous Rate Element, Tag Loop at End User Premise			UEPCO	URETL		8.33	0.83								
2-WIRE VOICE LOOP/ 2WIRE VOICE GRADE IO TRANSPORT/ 2-WIRE LINE PORT (RES)																
ADDITIONAL NRCs																
	Unbundled Miscellaneous Rate Element, Tag Designed Loop at End User Premise			UEPFR	URETN		11.19	1.10								
2-WIRE VOICE LOOP/ 2WIRE VOICE GRADE IO TRANSPORT/ 2-WIRE LINE PORT (BUS)																
ADDITIONAL NRCs																
	Unbundled Miscellaneous Rate Element, Tag Designed Loop at End User Premise			UEPFB	URETN		11.19	1.10								
2-WIRE VOICE LOOP/ 2WIRE VOICE GRADE IO TRANSPORT/ 2-WIRE LINE PORT (PBX)																
ADDITIONAL NRCs																
	Unbundled Miscellaneous Rate Element, Tag Designed Loop at End User Premise			UEPFP	URETN		11.19	1.10								
2-WIRE VOICE GRADE LOOP- BUS ONLY - WITH 2-WIRE DID TRUNK PORT																
ADDITIONAL NRCs																
	Unbundled Miscellaneous Rate Element, Tag Loop at End User Premise			UEPPX	URETN		11.19	1.10								
2-WIRE ISDN DIGITAL GRADE LOOP WITH 2-WIRE ISDN DIGITAL LINE SIDE PORT																
ADDITIONAL NRCs																
	Unbundled Miscellaneous Rate Element, Tag Loop at End User Premise			UEPPB UEPPR	URETL		8.33	0.83								
	Unbundled Miscellaneous Rate Element, Tag Design Loop at End Use Premise			UEPPB UEPPR	URETN		11.19	1.10								
UNBUNDLED CENTREX PORT/LOOP COMBINATIONS - COST BASED RATES																
UNE-P CENTREX - 1AESS - (Valid in AL,FL,GA,KY,LA,MS,&TN only)																
Additional Non-Recurring Charges (NRC)																
	Unbundled Miscellaneous Rate Element, Tag Loop at End Use Premise			UEP91	URETL		8.33	0.83								
	Unbundled Miscellaneous Rate Element, Tag Design Loop at End Use Premise			UEP91	URETN		11.19	1.10								

UNBUNDLED NETWORK ELEMENTS - Mississippi														Attachment: 2		Exhibit: C	
CATEGORY		RATE ELEMENTS	Interim	Zone	BCS	USOC	RATES ($)					Svc Order Submitted Elec per LSR	Svc Order Submitted Manually per LSR	Incremental Charge - Manual Svc Order vs. Electronic-1st	Incremental Charge - Manual Svc Order vs. Electronic-Add'l	Incremental Charge - Manual Svc Order vs. Electronic-Disc 1st	Incremental Charge - Manual Svc Order vs. Electronic-Disc Add'l
								Nonrecurring		Nonrecurring Disconnect		OSS Rates ($)					
							Rec										
								First	Add'l	First	Add'l	SOMEC	SOMAN	SOMAN	SOMAN	SOMAN	SOMAN
	UNE-P CENTREX - 5ESS (Valid in All States)																
	Additional Non-Recurring Charges (NRC)																
		Unbundled Miscellaneous Rate Element, Tag Loop at End Use Premise			UEP95	URETL		8.33	0.83								
		Unbundled Miscellaneous Rate Element, Tag Design Loop at End Use Premise			UEP95	URETN		11.19	1.10								
	UNE-P CENTREX - DMS100 (Valid in All States)																
	Additional Non-Recurring Charges (NRC)																
		Unbundled Miscellaneous Rate Element, Tag Loop at End Use Premise			UEP9D	URETL		8.33	0.83								
		Unbundled Miscellaneous Rate Element, Tag Design Loop at End Use Premise			UEP9D	URETN		11.19	1.10								
	UNE-P CENTREX - EWSD (Valid in AL, FL, KY, LA, MS & TN)																
	Additional Non-Recurring Charges (NRC)																
		Unbundled Miscellaneous Rate Element, Tag Loop at End Use Premise			UEP9E	URETL		8.33	0.83								
		Unbundled Miscellaneous Rate Element, Tag Design Loop at End Use Premise			UEP9E	URETN		11.19	1.10								
	UNE-P CENTREX - DCO - Valid in AL, KY, LA, MS, & TN)																
	Additional Non-Recurring Charges (NRC)																
		Unbundled Miscellaneous Rate Element, Tag Loop at End Use Premise			UEP93	URETL		8.33	0.83								
		Unbundled Miscellaneous Rate Element, Tag Design Loop at End Use Premise			UEP93	URETN		11.19	1.10								

UNBUNDLED NETWORK ELEMENTS - North Carolina														Attachment: 2		Exhibit: C	
CATEGORY		RATE ELEMENTS	Interim	Zone	BCS	USOC	RATES ($)					Svc Order Submitted Elec per LSR	Svc Order Submitted Manually per LSR	Incremental Charge - Manual Svc Order vs. Electronic-1st	Incremental Charge - Manual Svc Order vs. Electronic-Add'l	Incremental Charge - Manual Svc Order vs. Electronic-Disc 1st	Incremental Charge - Manual Svc Order vs. Electronic-Disc Add'l
							Rec	Nonrecurring		Nonrecurring Disconnect		OSS Rates ($)					
								First	Add'l	First	Add'l	SOMEC	SOMAN	SOMAN	SOMAN	SOMAN	SOMAN
UNBUNDLED PORT/LOOP COMBINATIONS - COST BASED RATES																	
	2-WIRE VOICE GRADE LOOP WITH 2-WIRE LINE PORT (RES)																
	ADDITIONAL NRCs																
		Unbundled Miscellaneous Rate Element, Tag Loop at End User Premise			UEPRX	URETL		12.86	1.43								0.00
	2-WIRE VOICE GRADE LOOP WITH 2-WIRE LINE PORT (BUS)																
	ADDITIONAL NRCs																
		Unbundled Miscellaneous Rate Element, Tag Loop at End User Premise			UEPBX	URETL		12.86	1.43								0.00
	2-WIRE VOICE GRADE LOOP WITH 2-WIRE LINE PORT (RES - PBX)																
	ADDITIONAL NRCs																
		Unbundled Miscellaneous Rate Element, Tag Loop at End User Premise			UEPRG	URETL		12.86	1.43								0.00
	2-WIRE VOICE GRADE LOOP WITH 2-WIRE LINE PORT (BUS - PBX)																
	ADDITIONAL NRCs																
		Unbundled Miscellaneous Rate Element, Tag Loop at End User Premise			UEPPX	URETL		12.86	1.43								0.00
	2-WIRE VOICE GRADE LOOP WITH 2-WIRE ANALOG LINE COIN PORT																
	ADDITIONAL NRCs																
		Unbundled Miscellaneous Rate Element, Tag Loop at End User Premise			UEPCO	URETL		12.86	1.43								0.00
	2-WIRE VOICE LOOP/ 2WIRE VOICE GRADE IO TRANSPORT/ 2-WIRE LINE PORT (RES)																
	ADDITIONAL NRCs																
		Unbundled Miscellaneous Rate Element, Tag Designed Loop at End User Premise			UEPFR	URETN		17.08	1.50								0.00
	2-WIRE VOICE LOOP/ 2WIRE VOICE GRADE IO TRANSPORT/ 2-WIRE LINE PORT (BUS)																
	ADDITIONAL NRCs																
		Unbundled Miscellaneous Rate Element, Tag Designed Loop at End User Premise			UEPFB	URETN		17.08	1.50								0.00
	2-WIRE VOICE LOOP/ 2WIRE VOICE GRADE IO TRANSPORT/ 2-WIRE LINE PORT (PBX)																
	ADDITIONAL NRCs																
		Unbundled Miscellaneous Rate Element, Tag Designed Loop at End User Premise			UEPFP	URETN		17.08	1.50								0.00
	2-WIRE VOICE GRADE LOOP- BUS ONLY - WITH 2-WIRE DID TRUNK PORT																
	ADDITIONAL NRCs																
		Unbundled Miscellaneous Rate Element, Tag Loop at End User Premise			UEPPX	URETN		17.08	1.50								
	2-WIRE ISDN DIGITAL GRADE LOOP WITH 2-WIRE ISDN DIGITAL LINE SIDE PORT																
	ADDITIONAL NRCs																
		Unbundled Miscellaneous Rate Element, Tag Loop at End User Premise			UEPPB UEPPR	URETL		12.86	0.83								
		Unbundled Miscellaneous Rate Element, Tag Design Loop at End Use Premise			UEPPB UEPPR	URETN		17.08	1.50								
UNBUNDLED CENTREX PORT/LOOP COMBINATIONS - COST BASED RATES																	
	UNE-P CENTREX - 5ESS (Valid in All States)																
	Additional Non-Recurring Charges (NRC)																
		Unbundled Miscellaneous Rate Element, Tag Loop at End Use Premise			UEP95	URETL		8.33	0.83								
		Unbundled Miscellaneous Rate Element, Tag Design Loop at End Use Premise			UEP95	URETN		11.20	1.10								

UNBUNDLED NETWORK ELEMENTS - North Carolina														Attachment: 2		Exhibit: C	
CATEGORY	RATE ELEMENTS	Interim	Zone	BCS	USOC	RATES ($)					Svc Order Submitted Elec per LSR	Svc Order Submitted Manually per LSR	Incremental Charge - Manual Svc Order vs. Electronic-1st	Incremental Charge - Manual Svc Order vs. Electronic-Add'l	Incremental Charge - Manual Svc Order vs. Electronic-Disc 1st	Incremental Charge - Manual Svc Order vs. Electronic-Disc Add'l
						Rec	Nonrecurring		Nonrecurring Disconnect		OSS Rates ($)					
							First	Add'l	First	Add'l	SOMEC	SOMAN	SOMAN	SOMAN	SOMAN	SOMAN
	UNE-P CENTREX - DMS100 (Valid in All States)															
	Additional Non-Recurring Charges (NRC)															
	Unbundled Miscellaneous Rate Element, Tag Loop at End Use Premise			UEP9D	URETL		8.33	0.83								
	Unbundled Miscellaneous Rate Element, Tag Design Loop at End Use Premise			UEP9D	URETN		17.08	1.50								
UNBUNDLED PORT LOOP COMBINATIONS - MARKET RATES																
	2-WIRE VOICE GRADE LOOP WITH 2-WIRE LINE PORT (RES)															
	ADDITIONAL NRCs															
	Unbundled Miscellaneous Rate Element, Tag Loop at End User Premise			UEPRX	URETL		12.86	1.43								
	2-WIRE VOICE GRADE LOOP WITH 2-WIRE LINE PORT (BUS)															
	ADDITIONAL NRCs															
	Unbundled Miscellaneous Rate Element, Tag Loop at End User Premise			UEPBX	URETL		12.86	1.43								
	2-WIRE VOICE GRADE LOOP WITH 2-WIRE LINE PORT (RES - PBX)															
	ADDITIONAL NRCs															
	Unbundled Miscellaneous Rate Element, Tag Loop at End User Premise			UEPRG	URETL		12.86	1.43								
	2-WIRE VOICE GRADE LOOP WITH 2-WIRE LINE PORT (BUS - PBX)															
	ADDITIONAL NRCs															
	Unbundled Miscellaneous Rate Element, Tag Loop at End User Premise			UEPPX	URETL		12.86	1.43								
	2-WIRE VOICE GRADE LOOP WITH 2-WIRE ANALOG LINE COIN PORT															
	ADDITIONAL NRCs															
	Unbundled Miscellaneous Rate Element, Tag Loop at End User Premise			UEPCO	URETL		12.86	1.43								
	2-WIRE VOICE LOOP/ 2WIRE VOICE GRADE IO TRANSPORT/ 2-WIRE LINE PORT (RES)															
	ADDITIONAL NRCs															
	Unbundled Miscellaneous Rate Element, Tag Designed Loop at End User Premise			UEPFR	URETN		17.08	1.50								
	2-WIRE VOICE LOOP/ 2WIRE VOICE GRADE IO TRANSPORT/ 2-WIRE LINE PORT (BUS)															
	ADDITIONAL NRCs															
	Unbundled Miscellaneous Rate Element, Tag Designed Loop at End User Premise			UEPFB	URETN		17.08	1.50								
	2-WIRE VOICE LOOP/ 2WIRE VOICE GRADE IO TRANSPORT/ 2-WIRE LINE PORT (PBX)															
	ADDITIONAL NRCs															
	Unbundled Miscellaneous Rate Element, Tag Designed Loop at End User Premise			UEPFP	URETN		17.08	1.50								
UNBUNDLED PORT/LOOP COMBINATIONS - MARKET BASED RATES																
	2-WIRE VOICE GRADE LOOP- BUS ONLY - WITH 2-WIRE DID TRUNK PORT															
	ADDITIONAL NRCs															
	Unbundled Miscellaneous Rate Element, Tag Loop at End User Premise			UEPPX	URETN		17.08	1.50								
	2-WIRE ISDN DIGITAL GRADE LOOP WITH 2-WIRE ISDN DIGITAL LINE SIDE PORT															
	ADDITIONAL NRCs															
	Unbundled Miscellaneous Rate Element, Tag Loop at End User Premise			UEPPB UEPPR	URETL		12.86	1.43								
	Unbundled Miscellaneous Rate Element, Tag Designed Loop at End User Premise			UEPPB UEPPR	URETN		17.08	1.50								
UNBUNDLED CENTREX PORT/LOOP COMBINATIONS - MARKET RATES																
	UNE-P CENTREX - 5ESS (Valid in All States)															
	Additional Non-Recurring Charges (NRC)															
	Unbundled Miscellaneous Rate Element, Tag Loop at End Use Premise			UEP95	URETL		12.86	1.43								
	Unbundled Miscellaneous Rate Element, Tag Design Loop at End Use Premise			UEP95	URETN		17.08	1.50								
	UNE-P CENTREX - DMS100 (Valid in All States)															

UNBUNDLED NETWORK ELEMENTS - North Carolina														Attachment: 2		Exhibit: C	
CATEGORY		RATE ELEMENTS	Interim	Zone	BCS	USOC	RATES ($)					Svc Order Submitted Elec per LSR	Svc Order Submitted Manually per LSR	Incremental Charge - Manual Svc Order vs. Electronic-1st	Incremental Charge - Manual Svc Order vs. Electronic-Add'l	Incremental Charge - Manual Svc Order vs. Electronic-Disc 1st	Incremental Charge - Manual Svc Order vs. Electronic-Disc Add'l
								Nonrecurring		Nonrecurring Disconnect		OSS Rates ($)					
							Rec										
								First	Add'l	First	Add'l	SOMEC	SOMAN	SOMAN	SOMAN	SOMAN	SOMAN
	Additional Non-Recurring Charges (NRC)																
		Unbundled Miscellaneous Rate Element, Tag Loop at End Use Premise			UEP9D	URETL		12.86	1.43								
		Unbundled Miscellaneous Rate Element, Tag Design Loop at End Use Premise			UEP9D	URETN		17.08	1.50								

UNBUNDLED NETWORK ELEMENTS - South Carolina														Attachment: 2		Exhibit: C	
CATEGORY		RATE ELEMENTS	Interim	Zone	BCS	USOC	RATES ($)					Svc Order Submitted Elec per LSR	Svc Order Submitted Manually per LSR	Incremental Charge - Manual Svc Order vs. Electronic-1st	Incremental Charge - Manual Svc Order vs. Electronic-Add'l	Incremental Charge - Manual Svc Order vs. Electronic-Disc 1st	Incremental Charge - Manual Svc Order vs. Electronic-Disc Add'l
							Rec	Nonrecurring		Nonrecurring Disconnect		OSS Rates ($)					
								First	Add'l	First	Add'l	SOMEC	SOMAN	SOMAN	SOMAN	SOMAN	SOMAN
UNBUNDLED PORT/LOOP COMBINATIONS - COST BASED RATES																	
	2-WIRE VOICE GRADE LOOP WITH 2-WIRE LINE PORT (RES)																
	ADDITIONAL NRCs																
		Unbundled Miscellaneous Rate Element, Tag Loop at End User Premise			UEPRX	URETL		8.33	0.83								
	2-WIRE VOICE GRADE LOOP WITH 2-WIRE LINE PORT (BUS)																
	ADDITIONAL NRCs																
		Unbundled Miscellaneous Rate Element, Tag Loop at End User Premise			UEPBX	URETL		8.33	0.83								
	2-WIRE VOICE GRADE LOOP WITH 2-WIRE LINE PORT (RES - PBX)																
	ADDITIONAL NRCs																
		Unbundled Miscellaneous Rate Element, Tag Loop at End User Premise			UEPRG	URETL		8.33	0.83								
	2-WIRE VOICE GRADE LOOP WITH 2-WIRE LINE PORT (BUS - PBX)																
	ADDITIONAL NRCs																
		Unbundled Miscellaneous Rate Element, Tag Loop at End User Premise			UEPPX	URETL		8.33	0.83								
	2-WIRE VOICE GRADE LOOP WITH 2-WIRE ANALOG LINE COIN PORT																
	ADDITIONAL NRCs																
		Unbundled Miscellaneous Rate Element, Tag Loop at End User Premise			UEPCO	URETL		8.33	0.83								
	2-WIRE VOICE LOOP/ 2WIRE VOICE GRADE IO TRANSPORT/ 2-WIRE LINE PORT (RES)																
	ADDITIONAL NRCs																
		Unbundled Miscellaneous Rate Element, Tag Designed Loop at End User Premise			UEPFR	URETN		11.24	1.10								
	2-WIRE VOICE LOOP/ 2WIRE VOICE GRADE IO TRANSPORT/ 2-WIRE LINE PORT (BUS)																
	ADDITIONAL NRCs																
		Unbundled Miscellaneous Rate Element, Tag Designed Loop at End User Premise			UEPFB	URETN		11.24	1.10								
	2-WIRE VOICE LOOP/ 2WIRE VOICE GRADE IO TRANSPORT/ 2-WIRE LINE PORT (PBX)																
	ADDITIONAL NRCs																
		Unbundled Miscellaneous Rate Element, Tag Designed Loop at End User Premise			UEPFP	URETN		11.24	1.10								
	2-WIRE VOICE GRADE LOOP- BUS ONLY - WITH 2-WIRE DID TRUNK PORT																
	ADDITIONAL NRCs																
		Unbundled Miscellaneous Rate Element, Tag Loop at End User Premise			UEPPX	URETN		11.24	1.10								
	2-WIRE ISDN DIGITAL GRADE LOOP WITH 2-WIRE ISDN DIGITAL LINE SIDE PORT																
	ADDITIONAL NRCs																
		Unbundled Miscellaneous Rate Element, Tag Loop at End User Premise			UEPPB UEPPR	URETL		8.33	0.83								
		Unbundled Miscellaneous Rate Element, Tag Design Loop at End Use Premise			UEPPB UEPPR	URETN		11.24	1.10								
UNBUNDLED CENTREX PORT/LOOP COMBINATIONS - COST BASED RATES																	
	UNE-P CENTREX - 5ESS (Valid in All States)																
	Additional Non-Recurring Charges (NRC)																
		Unbundled Miscellaneous Rate Element, Tag Loop at End Use Premise			UEP95	URETL		8.33	0.83								
		Unbundled Miscellaneous Rate Element, Tag Design Loop at End Use Premise			UEP95	URETN		11.24	1.10								

UNBUNDLED NETWORK ELEMENTS - South Carolina														Attachment: 2		Exhibit: C	
CATEGORY		RATE ELEMENTS	Interim	Zone	BCS	USOC	RATES ($)					Svc Order Submitted Elec per LSR	Svc Order Submitted Manually per LSR	Incremental Charge - Manual Svc Order vs. Electronic-1st	Incremental Charge - Manual Svc Order vs. Electronic-Add'l	Incremental Charge - Manual Svc Order vs. Electronic-Disc 1st	Incremental Charge - Manual Svc Order vs. Electronic-Disc Add'l
								Nonrecurring		Nonrecurring Disconnect		OSS Rates ($)					
							Rec										
								First	Add'l	First	Add'l	SOMEC	SOMAN	SOMAN	SOMAN	SOMAN	SOMAN
	UNE-P CENTREX - DMS100 (Valid in All States)																
	Additional Non-Recurring Charges (NRC)																
		Unbundled Miscellaneous Rate Element, Tag Loop at End Use Premise			UEP9D	URETL		8.33	0.83								
		Unbundled Miscellaneous Rate Element, Tag Design Loop at End Use Premise			UEP9D	URETN		11.24	1.10								

UNBUNDLED NETWORK ELEMENTS - Tennessee														Attachment: 2		Exhibit: C	
CATEGORY	RATE ELEMENTS	Interim	Zone	BCS	USOC	RATES ($)					Svc Order Submitted Elec per LSR	Svc Order Submitted Manually per LSR	Incremental Charge - Manual Svc Order vs. Electronic-1st	Incremental Charge - Manual Svc Order vs. Electronic-Add'l	Incremental Charge - Manual Svc Order vs. Electronic-Disc 1st	Incremental Charge - Manual Svc Order vs. Electronic-Disc Add'l
						Rec	Nonrecurring		Nonrecurring Disconnect		OSS Rates ($)					
							First	Add'l	First	Add'l	SOMEC	SOMAN	SOMAN	SOMAN	SOMAN	SOMAN
UNBUNDLED PORT/LOOP COMBINATIONS - COST BASED RATES																
2-WIRE VOICE GRADE LOOP WITH 2-WIRE LINE PORT (RES)																
ADDITIONAL NRCs																
	Unbundled Miscellaneous Rate Element, Tag Loop at End User Premise			UEPRX	URETL		12.12	1.34								
2-WIRE VOICE GRADE LOOP WITH 2-WIRE LINE PORT (BUS)																
ADDITIONAL NRCs																
	Unbundled Miscellaneous Rate Element, Tag Loop at End User Premise			UEPBX	URETL		12.12	1.34								
2-WIRE VOICE GRADE LOOP WITH 2-WIRE LINE PORT (RES - PBX)																
ADDITIONAL NRCs																
	Unbundled Miscellaneous Rate Element, Tag Loop at End User Premise			UEPRG	URETL		12.12	1.34								
2-WIRE VOICE GRADE LOOP WITH 2-WIRE LINE PORT (BUS - PBX)																
ADDITIONAL NRCs																
	Unbundled Miscellaneous Rate Element, Tag Loop at End User Premise			UEPPX	URETL		12.12	1.34								
2-WIRE VOICE GRADE LOOP WITH 2-WIRE ANALOG LINE COIN PORT																
ADDITIONAL NRCs																
	Unbundled Miscellaneous Rate Element, Tag Loop at End User Premise			UEPCO	URETL		12.12	1.34								
2-WIRE VOICE LOOP/ 2WIRE VOICE GRADE IO TRANSPORT/ 2-WIRE LINE PORT (RES)																
ADDITIONAL NRCs																
	Unbundled Miscellaneous Rate Element, Tag Designed Loop at End User Premise			UEPFR	URETN		15.32	1.34								
2-WIRE VOICE LOOP/ 2WIRE VOICE GRADE IO TRANSPORT/ 2-WIRE LINE PORT (BUS)																
ADDITIONAL NRCs																
	Unbundled Miscellaneous Rate Element, Tag Designed Loop at End User Premise			UEPFB	URETN		15.32	1.34								
2-WIRE VOICE LOOP/ 2WIRE VOICE GRADE IO TRANSPORT/ 2-WIRE LINE PORT (PBX)																
ADDITIONAL NRCs																
	Unbundled Miscellaneous Rate Element, Tag Designed Loop at End User Premise			UEPFP	URETN		15.32	1.34								
2-WIRE VOICE GRADE LOOP- BUS ONLY - WITH 2-WIRE DID TRUNK PORT																
ADDITIONAL NRCs																
	Unbundled Miscellaneous Rate Element, Tag Loop at End User Premise			UEPPX	URETN		15.32	1.34								
2-WIRE ISDN DIGITAL GRADE LOOP WITH 2-WIRE ISDN DIGITAL LINE SIDE PORT																
ADDITIONAL NRCs																
	Unbundled Miscellaneous Rate Element, Tag Loop at End User Premise			UEPPB UEPPR	URETL		12.12	1.34								
	Unbundled Miscellaneous Rate Element, Tag Design Loop at End Use Premise			UEPPB UEPPR	URETN		15.32	1.34								
UNBUNDLED CENTREX PORT/LOOP COMBINATIONS - COST BASED RATES																
UNE-P CENTREX - 1AESS - (Valid in AL,FL,GA,KY,LA,MS,&TN only)																
Additional Non-Recurring Charges (NRC)																
	Unbundled Miscellaneous Rate Element, Tag Loop at End Use Premise			UEP91	URETL		12.12	1.34								
	Unbundled Miscellaneous Rate Element, Tag Design Loop at End Use Premise			UEP91	URETN		15.32	1.34								

UNBUNDLED NETWORK ELEMENTS - Tennessee														Attachment: 2		Exhibit: C	
CATEGORY	RATE ELEMENTS	Interim	Zone	BCS	USOC	RATES ($)					Svc Order Submitted Elec per LSR	Svc Order Submitted Manually per LSR	Incremental Charge - Manual Svc Order vs. Electronic-1st	Incremental Charge - Manual Svc Order vs. Electronic-Add'l	Incremental Charge - Manual Svc Order vs. Electronic-Disc 1st	Incremental Charge - Manual Svc Order vs. Electronic-Disc Add'l
						Rec	Nonrecurring		Nonrecurring Disconnect		OSS Rates ($)					
							First	Add'l	First	Add'l	SOMEC	SOMAN	SOMAN	SOMAN	SOMAN	SOMAN
UNE-P CENTREX - 5ESS (Valid in All States)																
Additional Non-Recurring Charges (NRC)																
	Unbundled Miscellaneous Rate Element, Tag Loop at End Use Premise			UEP95	URETL		12.12	1.34								
	Unbundled Miscellaneous Rate Element, Tag Design Loop at End Use Premise			UEP95	URETN		15.32	1.34								
UNE-P CENTREX - DMS100 (Valid in All States)																
Additional Non-Recurring Charges (NRC)																
	Unbundled Miscellaneous Rate Element, Tag Loop at End Use Premise			UEP9D	URETL		12.12	1.34								
	Unbundled Miscellaneous Rate Element, Tag Design Loop at End Use Premise			UEP9D	URETN		15.32	1.34								
UNE-P CENTREX - EWSD (Valid in AL, FL, KY, LA, MS & TN)																
Additional Non-Recurring Charges (NRC)																
	Unbundled Miscellaneous Rate Element, Tag Loop at End Use Premise			UEP9E	URETL		12.12	1.34								
	Unbundled Miscellaneous Rate Element, Tag Design Loop at End Use Premise			UEP9E	URETN		15.32	1.34								
UNE-P CENTREX - DCO - Valid in AL, KY, LA, MS, & TN)																
Additional Non-Recurring Charges (NRC)																
	Unbundled Miscellaneous Rate Element, Tag Loop at End Use Premise			UEP93	URETL		12.12	1.34								
	Unbundled Miscellaneous Rate Element, Tag Design Loop at End Use Premise			UEP93	URETN		15.32	1.34								
UNBUNDLED PORT LOOP COMBINATIONS - MARKET RATES																
2-WIRE VOICE GRADE LOOP WITH 2-WIRE LINE PORT (RES)																
ADDITIONAL NRCs																
	Unbundled Miscellaneous Rate Element, Tag Loop at End User Premise			UEPRX	URETL		12.12	1.34								
2-WIRE VOICE GRADE LOOP WITH 2-WIRE LINE PORT (BUS)																
ADDITIONAL NRCs																
	Unbundled Miscellaneous Rate Element, Tag Loop at End User Premise			UEPBX	URETL		12.12	1.34								
2-WIRE VOICE GRADE LOOP WITH 2-WIRE LINE PORT (RES - PBX)																
ADDITIONAL NRCs																
	Unbundled Miscellaneous Rate Element, Tag Loop at End User Premise			UEPRG	URETL		12.12	1.34								
2-WIRE VOICE GRADE LOOP WITH 2-WIRE LINE PORT (BUS - PBX)																
ADDITIONAL NRCs																
	Unbundled Miscellaneous Rate Element, Tag Loop at End User Premise			UEPPX	URETL		12.12	1.34								
2-WIRE VOICE GRADE LOOP WITH 2-WIRE ANALOG LINE COIN PORT																
ADDITIONAL NRCs																
	Unbundled Miscellaneous Rate Element, Tag Loop at End User Premise			UEPCO	URETL		12.12	1.34								
2-WIRE VOICE LOOP/ 2WIRE VOICE GRADE IO TRANSPORT/ 2-WIRE LINE PORT (RES)																
ADDITIONAL NRCs																
	Unbundled Miscellaneous Rate Element, Tag Designed Loop at End User Premise			UEPFR	URETN		15.32	1.34								
2-WIRE VOICE LOOP/ 2WIRE VOICE GRADE IO TRANSPORT/ 2-WIRE LINE PORT (BUS)																
ADDITIONAL NRCs																
	Unbundled Miscellaneous Rate Element, Tag Designed Loop at End User Premise			UEPFB	URETN		15.32	1.34								
2-WIRE VOICE LOOP/ 2WIRE VOICE GRADE IO TRANSPORT/ 2-WIRE LINE PORT (PBX)																
ADDITIONAL NRCs																
	Unbundled Miscellaneous Rate Element, Tag Designed Loop at End User Premise			UEPFP	URETN		15.32	1.34								

UNBUNDLED NETWORK ELEMENTS - Tennessee														Attachment: 2		Exhibit: C	
CATEGORY	RATE ELEMENTS	Interim	Zone	BCS	USOC	RATES ($)					Svc Order Submitted Elec per LSR	Svc Order Submitted Manually per LSR	Incremental Charge - Manual Svc Order vs. Electronic-1st	Incremental Charge - Manual Svc Order vs. Electronic-Add'l	Incremental Charge - Manual Svc Order vs. Electronic-Disc 1st	Incremental Charge - Manual Svc Order vs. Electronic-Disc Add'l
						Rec	Nonrecurring		Nonrecurring Disconnect		OSS Rates ($)					
							First	Add'l	First	Add'l	SOMEC	SOMAN	SOMAN	SOMAN	SOMAN	SOMAN
UNBUNDLED PORT/LOOP COMBINATIONS - MARKET BASED RATES																
	2-WIRE VOICE GRADE LOOP- BUS ONLY - WITH 2-WIRE DID TRUNK PORT															
	ADDITIONAL NRCs															
	Unbundled Miscellaneous Rate Element, Tag Loop at End User Premise			UEPPX	URETN		15.32	1.34								
	2-WIRE ISDN DIGITAL GRADE LOOP WITH 2-WIRE ISDN DIGITAL LINE SIDE PORT															
	ADDITIONAL NRCs															
	Unbundled Miscellaneous Rate Element, Tag Loop at End User Premise			UEPPB UEPPR	URETL		12.12	1.34								
	Unbundled Miscellaneous Rate Element, Tag Designed Loop at End User Premise			UEPPB UEPPR	URETN		15.32	1.34								
UNBUNDLED CENTREX PORT/LOOP COMBINATIONS - MARKET RATES																
	UNE-P CENTREX - 1AESS - (Valid in AL,FL,GA,KY,LA,MS,&TN only)															
	Additional Non-Recurring Charges (NRC)															
	Unbundled Miscellaneous Rate Element, Tag Loop at End Use Premise			UEP91	URETL		12.12	1.34								
	Unbundled Miscellaneous Rate Element, Tag Design Loop at End Use Premise			UEP91	URETN		15.32	1.34								
	UNE-P CENTREX - 5ESS (Valid in All States)															
	Additional Non-Recurring Charges (NRC)															
	Unbundled Miscellaneous Rate Element, Tag Loop at End Use Premise			UEP95	URETL		12.12	1.34								
	Unbundled Miscellaneous Rate Element, Tag Design Loop at End Use Premise			UEP95	URETN		15.32	1.34								
	UNE-P CENTREX - DMS100 (Valid in All States)															
	Additional Non-Recurring Charges (NRC)															
	Unbundled Miscellaneous Rate Element, Tag Loop at End Use Premise			UEP9D	URETL		12.12	1.34								
	Unbundled Miscellaneous Rate Element, Tag Design Loop at End Use Premise			UEP9D	URETN		15.32	1.34								
	UNE-P CENTREX - EWSD (Valid in AL, FL, KY, LA, MS & TN)															
	Additional Non-Recurring Charges (NRC)															
	Unbundled Miscellaneous Rate Element, Tag Loop at End Use Premise			UEP9E	URETL		12.12	1.34								
	Unbundled Miscellaneous Rate Element, Tag Design Loop at End Use Premise			UEP9E	URETN		15.32	1.34								