COMMONWEALTH OF KENTUCKY

BEFORE THE PUBLIC SERVICE COMMISSION

In the Matter of:

Electronic Application Of Kentucky Power Company For 1) A Certificate Of Public Convenience And Necessity To Construct A Natural Gas-Fired Combined Cycle Generating Facility In Lawrence County, Kentucky; 2) A Site Compatibility Certificate; 3) A Certificate Of Public Convenience And Necessity To Construct A New Transmission Substation In Boyd County, Kentucky; 4) Approval Of A Short-Term Capacity Purchase Agreement; And 5) For All Other Required Approvals And Relief	)))))))))	Case No. 2026-00324

DIRECT TESTIMONY OF

AMY J. ELLIOTT

ON BEHALF OF KENTUCKY POWER COMPANY

DIRECT TESTIMONY OF
AMY J. ELLIOTT ON BEHALF OF
KENTUCKY POWER COMPANY
BEFORE THE PUBLIC SERVICE COMMISSION OF KENTUCKY

CASE NO. 2026-00324

TABLE OF CONTENTS

SECTION **PAGE**

I. CASE SUMMARY 1
II. INTRODUCTION 2
III. BACKGROUND 3
IV. PURPOSE OF TESTIMONY 4
V. APPLICATION SUMMARY 6
VI. THE TERAWULF ESA 13
VII. SERVING THE TERAWULF ESA LOAD 20
VIII. VENATOR SUBSTATION PROJECT 24
IX. THE COMBINED-CYCLE GENERATING PROJECT AND THE VENATOR SUBSTATION PROJECT ARE REQUIRED FOR THE PUBLIC CONVENIENCE AND NECESSITY, IS FOR A PROPER PURPOSE, AND WILL NOT RESULT IN WASTEFUL DUPLICATION 27
X. ECONOMIC IMPACT ANALYSIS 29
XI. THE BRIDGE CAPACITY AGREEMENT IS FOR A LAWFUL OBJECT, IS NECESSARY AND APPROPRIATE TO MEET THE COMPANY'S OBLIGATION TO SERVE ITS CUSTOMERS, AND DOES NOT RESULT IN WASTEFUL DUPLICATION 32
XII. FINANCING 34
XIII. COST RECOVERY 35
XIV. CONCLUSION 36

EXHIBITS

EXHIBIT	DESCRIPTION
EXHIBIT AJE-1	TeraWulf Electric Service Agreement
EXHIBIT AJE-2	TeraWulf Letter of Agreement
EXHIBIT AJE-3	Muskie Data Campus Fact Sheet
EXHIBIT AJE-4	Muskie Data Campus Economic Benefits Summary
EXHIBIT AJE-5	TeraWulf Letter Requesting Separate Applications
CONFIDENTIAL EXHIBIT AJE-6	Bridge Capacity Agreement
EXHIBIT AJE-7	2026 Purchase Power Agreement Request for Proposal
EXHIBIT AJE-8	2026 Purchase Sale Agreement Request for Proposal

DIRECT TESTIMONY OF
AMY J. ELLIOTT ON BEHALF OF
KENTUCKY POWER COMPANY
BEFORE THE PUBLIC SERVICE COMMISSION OF KENTUCKY

CASE NO. 2026-00324

I. CASE SUMMARY

Q. PLEASE SUMMARIZE THIS CASE.

A. Kentucky Power Company's ("Kentucky Power" or the "Company") economic development efforts over the past decade have focused on attracting new load to the service territory. Increased load allows the Company to spread the costs it prudently incurs to provide service more broadly, benefitting its existing customers. This case is about adding a new large load customer to the Company's service territory, the manner through which the Company will serve the new load, and the resulting benefits to Kentucky Power's existing customers.

Kentucky Power entered into an Amended and Restated Electric Service Agreement (Tariff I.G.S.) with DB Long Hunts Data LLC[1] on November 4, 2026 (the "TeraWulf ESA"). Under the TeraWulf ESA, Kentucky Power will provide 1,000 MW of capacity and energy to the Muskie Data Campus to be developed at the EastPark Industrial Park in Boyd and Greenup Counties. The TeraWulf ESA does not provide any discounts to TeraWulf and instead builds on the existing customer protections provided in the large load provisions of Tariff Industrial General Service ("Tariff I.G.S."). The TeraWulf ESA provides approximately $2.1 billion in customer benefits and avoided costs over the full term, including $100,000,000 in residential bill credits.

[1] DB Long Hunts Data LLC is a wholly owned subsidiary of TeraWulf Inc. ("TeraWulf"). Throughout my Direct Testimony, the customer taking service under the TeraWulf ESA is referred to as "TeraWulf."

At TeraWulf's request and to support financing and end-user negotiations, the Company is seeking Commission approval of the TeraWulf ESA in a separate case (Case No. 2026-00323). In this case, the Company is seeking Commission approval of its plan to provide the capacity and energy to meet its obligations under the TeraWulf ESA. Specifically, Kentucky Power is seeking the necessary approvals for:

- a new natural gas-fired, combined-cycle generating facility at the site of the Company's existing Big Sandy Plant in Louisa, Lawrence County, Kentucky ("the Combined-Cycle Generation Project");
- a capacity purchase agreement between Kentucky Power and AEP Generation Resources Inc. (the "Bridge Capacity Agreement"); and
- a new 765/345kV substation in Boyd County, Kentucky (the "Venator Substation Project").

Each of these is necessary for the Company to provide service to the Muskie Data Campus and for the Company's existing customers to reap the benefits of the TeraWulf ESA.

This is a transformational moment for Kentucky Power, its customers, and the region. As described below, and throughout the Direct Testimonies of the Company's other witnesses in this case, the addition of the Muskie Data Campus is an opportunity to turn unprecedented new electric demand into long-term value for eastern Kentucky in the form of lower bills for residential customers, stronger electric infrastructure, new jobs and tax revenue, and additional private investment in the region Kentucky Power has served for generations.

II. INTRODUCTION

Q. PLEASE STATE YOUR NAME, POSITION, AND BUSINESS ADDRESS.

A. My name is Amy J. Elliott. I am the Vice President of Regulatory Services and External Affairs for Kentucky Power. My business address is 1645 Winchester Avenue, Ashland, Kentucky 41101.

III. BACKGROUND

Q. PLEASE SUMMARIZE YOUR EDUCATIONAL BACKGROUND AND BUSINESS EXPERIENCE.

A. In 2008, I joined Kentucky Power as part of the regulatory compliance group. Since then, I have held various leadership roles in the Company's Regulatory, External Affairs, and Customer Service departments. In my current role, I lead the Company's Regulatory, External Affairs, and Economic Development teams.

My educational background includes a Bachelor's degree in economics from Transylvania University, a Master's of Business Administration from the University of Massachusetts at Amherst, and completion of the Economic Development Institute at the University of Oklahoma.

Q. WHAT ARE YOUR PRINCIPAL AREAS OF RESPONSIBILITY WITH KENTUCKY POWER?

A. I am responsible for managing regulatory, economic development, and governmental affairs for Kentucky Power. The regulatory component includes planning and executing rate filings, as well as filings for certificates of public convenience and necessity ("CPCNs") and other regulatory matters before the Public Service Commission of Kentucky (the "Commission"). Much of the governmental affairs work I perform involves sharing Company and energy industry information with community and elected leaders. I also oversee and manage the Company's economic development efforts which include engaging in activities to retain or expand businesses within the Company's service territory.

Q. HAVE YOU PREVIOUSLY TESTIFIED IN ANY REGULATORY PROCEEDINGS?

A. Yes. Recently, I testified in Case No. 2026-00001, an application for a CPCN to construct a draft mechanical cooling tower at the Mitchell Plant. Previously, I testified in Case No. 2014-00396 and Case No. 2017-00179 which were both combined general rate cases and requests for amendments to the Company's Environmental Compliance Plan. Additionally, I filed testimony in seven periodic reviews of the Environmental Surcharge: Case No. 2014-00052, Case No. 2014-00322, Case No. 2015-00113, Case No. 2015-00280, Case No. 2016-00109, Case No. 2016-00336, and Case No. 2013-00444. I also testified before the Commission in two six-month reviews of the Company's fuel adjustment clause: Case No. 2013-00261 and Case No. 2013-00444. I also filed rehearing testimony in the Company's most recent rate case, Case No. 2025-00257, and have testified before Kentucky legislative committees on topics relating to the electric utility industry. I am filing testimony in Case No. 2026-00323 where the Company is seeking approval of the TeraWulf ESA.

IV. PURPOSE OF TESTIMONY

Q. WHAT IS THE PURPOSE OF YOUR DIRECT TESTIMONY?

A. The purpose of my Direct Testimony is to provide an overview of the regulatory, financial, and practical considerations contained within Kentucky Power's Application. My Direct Testimony also provides an economic impact analysis of the Company's proposed infrastructure projects and explains the Company's decision to seek approval of the TeraWulf ESA and the transmission line CPCN through separate applications. Specifically, my Direct Testimony:

- Explains the importance of this case for the Company's customers and the eastern Kentucky region as a whole;
- Describes the TeraWulf ESA and Transmission Letter of Agreement ("LOA"), attached as Exhibits AJE-1 and AJE-2, respectively, and most importantly, lay out the benefits and protections for existing customers;
- Provides an overview of Kentucky Power's current generation portfolio and its need for energy and capacity in light of the Muskie Data Campus;
- Details the reasoning and importance of each individual request included in the Company's application;
- Provides a high-level description of the following:
    - The Combined-Cycle Generation Project;
    - The Venator Substation Project; and
    - Kentucky Power's plans to meet its capacity needs;
- Introduces the Company's other witnesses in this proceeding; and
- Explains the Company's financing and cost recovery plans associated with each request included in the application.

Q. ARE YOU SPONSORING ANY EXHIBITS?

A. Yes, I am sponsoring the following Exhibits:

EXHIBIT	DESCRIPTION
Exhibit AJE-1	TeraWulf Electric Service Agreement
Exhibit AJE-2	TeraWulf Letter of Agreement
Exhibit AJE-3	Muskie Data Campus Fact Sheet
Exhibit AJE-4	Muskie Data Campus Economic Benefits Summary
Exhibit AJE-5	TeraWulf Letter Requesting Separate Applications
Confidential Exhibit AJE-6	Bridge Capacity Agreement
Exhibit AJE-7	2026 Purchase Power Agreement Request for Proposal
Exhibit AJE-8	2026 Purchase Sale Agreement Request for Proposal

Q. WERE THESE EXHIBITS PREPARED BY YOU OR UNDER YOUR DIRECTION?

A. Not entirely. Exhibits AJE-3, AJE-4, and AJE-5 were provided by TeraWulf. The remaining exhibits were prepared by me or under my direction.

V. APPLICATION SUMMARY

Q. CAN YOU SUMMARIZE THE COMPANY'S APPLICATION IN THIS PROCEEDING?

A. Yes. Through this Application, the Company is seeking approvals of the items necessary to serve the Muskie Data Campus:

- A CPCN to construct the Combined-Cycle Generation Project;
- A site certificate under KRS 278.216 for the Combined-Cycle Generation Project;
- A CPCN to construct the Venator Substation Project; and
- Approval of the Bridge Capacity Agreement.

The Company is seeking approval of the TeraWulf ESA in a separate proceeding, Case No. 2026-00323. For the Commission's convenience, Kentucky Power has included several proposals within this application, and the requests within the application are interdependent and should be considered as a whole. The Venator Substation Project, Combined-Cycle Generation Project, and Bridge Capacity Agreement are all necessary to provide electrical service under the TeraWulf ESA. The customer benefits included in the TeraWulf ESA and described below are tied to the requests being approved together without significant modification.

Q. CAN YOU DESCRIBE THE MUSKIE DATA CAMPUS AND ITS IMPORTANCE TO THE REGION?

A. The Muskie Data Campus is a 1,000 MW data center that TeraWulf will develop at the EastPark Industrial Park in Boyd and Greenup Counties. The significance of the Muskie Data Campus to the region and Kentucky Power's customers cannot be overstated. The Muskie Data Campus represents one of the largest economic development opportunities in the history of eastern Kentucky and will be transformative for the region.

The Muskie Data Campus will inject billions of dollars directly into the Company's service territory. The Muskie Data Campus is expected to bring approximately $8.5 billion of investment, about 3,500 construction jobs, 350 to 500 permanent jobs between TeraWulf and its end-user, and more than $200 million annually in state and local taxes once fully operating, totaling about $4.8 billion in state and local taxes through construction and its first 20 years of operation. These estimates do not include the billions of dollars of additional investment in computing equipment and chip hardware that TeraWulf's end-user tenant will install. Importantly, TeraWulf has not sought any tax incentives in connection with the Muskie Data Campus. Copies of the fact sheet for the Muskie Data Campus and a summary of the economic benefits of the Muskie Data Campus are included as Exhibits AJE-3 and AJE-4, respectively.

Kentucky Power customers across the 20-county service territory will benefit from the TeraWulf ESA in the form of rate reductions and avoided costs. Through the large-load provisions of the Company's Tariff I.G.S. and the additional provisions of the TeraWulf ESA, the Company is able to ensure that providing service to the Muskie Data Campus will not increase rates paid by customers. As described in more detail below, in Company

Witness Vaughan's Direct Testimony, and in Case No. 2026-00323, existing customers will see additional benefits from the Muskie Data Campus in two primary ways. First, the addition of the Muskie Data Campus load will result in lower rates for surcharges that allocate fixed costs based on a percentage revenue, primarily the Securitized Surcharge Rider ("SSR") and the Environmental Surcharge ("ES"). Second, the TeraWulf ESA obligates TeraWulf to provide $100,000,000 in residential bill credits during the winter heating months. Together, these additional benefits are expected to result in an annual decrease in the revenue requirement for residential customers.

The Muskie Data Campus, the Combined-Cycle Generation Project, and the Venator Substation Project represent a transformational change to the Company's service territory. It is an opportunity to turn unprecedented new electric demand into long-term value for eastern Kentucky in the form of lower bills for residential customers, stronger electric infrastructure, new jobs and tax revenue, and additional private investment in the region Kentucky Power has served for generations.

Q. PLEASE DESCRIBE THE EASTPARK INDUSTRIAL PARK.

A. The EastPark Industrial Park is a 1,000-acre industrial park located at the junction of Boyd, Greenup, and Carter Counties near the intersection of Interstate 64 and Kentucky Route 67, and across from the Green Valley Landfill. This industrial park was previously mined for coal and has been largely vacant for about 30 years. The Muskie Data Campus will be constructed at roughly the same location where the now-abandoned Braidy Industries aluminum rolling mill was proposed.

Q. HAS KENTUCKY POWER INVESTED IN THE EASTPARK INDUSTRIAL PARK?

A. Yes. The EastPark Industrial Park is a prime example of Kentucky Power's long-term approach to economic development and site readiness. Kentucky Power and its economic development partners have invested in EastPark to improve the park's readiness and ability to compete for economic development projects. In 2015, EastPark was certified as an AEP/McCallum Sweeney Quality Site. In 2017, funding from the Kentucky Power Economic Growth Grant ("KPEGG") was used to complete additional due diligence studies that led to Kentucky Build-Ready certification. In 2018, KPEGG funded a gap analysis to identify additional improvements needed at the park, and in 2020, KPEGG funding supported a new road to the Build-Ready site. These investments were made before TeraWulf identified EastPark for its planned Muskie Data Campus. Together, they helped address development barriers and improve the site's readiness for prospective projects. These efforts helped lay the groundwork to position EastPark to compete for significant economic development opportunities, including the Muskie Data Campus.

Q. CAN YOU EXPLAIN HOW THE COMPANY'S REQUESTS IN THIS CASE AND CASE NO. 2026-00323 WORK TOGETHER?

A. Yes. Between this case and Case No. 2026-00323, Kentucky Power seeks the necessary approvals for four items:

- the TeraWulf ESA;
- the Combined-Cycle Generation Project;
- the Venator Substation Project; and
- the Bridge Capacity Agreement.

The TeraWulf ESA is a special contract between Kentucky Power and TeraWulf that expands on the customer protections included in the large load provisions of the Company's Tariff I.G.S. Under the TeraWulf ESA, Kentucky Power will provide 1,000 MW of capacity and the related energy to the Muskie Data Center. The Muskie Data Center's load ramp begins in October 2028 and is expected to be at full load by October 2029. As described below and in more detail in Case No. 2026-00323, the TeraWulf ESA includes customer benefit provisions, including $100,000,000 in residential rate credits, unavailable under the large load provisions of the Company's Tariff I.G.S.

The remaining items in the Company's request, the Combined-Cycle Generation Project, the Venator Substation Project, and the Bridge Capacity Agreement, are the methods through which Kentucky Power will comply with its obligations to serve the Muskie Data Campus under the TeraWulf ESA. The Venator Substation Project is necessary to provide electrical service to the Muskie Data Campus at the necessary voltage. The Combined-Cycle Generation Project will provide efficient, dispatchable, baseload generation to serve the increased load on the Company's system. The Combined-Cycle Generation Project will be a "steel in the ground" generation asset in the Company's service territory. Because the Combined-Cycle Generation Project will not be in service until the second quarter of 2031, the Company must enter into the Bridge Capacity Agreement to provide the necessary capacity under the TeraWulf ESA in the interim. Additional information about each component of the Company's request is provided below.

Q. IF THE FOUR COMPONENTS OF THE COMPANY'S REQUEST ARE INTERRELATED, WHY IS THE COMPANY SEEKING APPROVAL OF THE TERAWULF ESA IN A SEPARATE CASE (CASE NO. 2026-00323)?

A. At TeraWulf's request, Kentucky Power is seeking approval of the TeraWulf ESA through a separate proceeding to expedite that decision. A letter from TeraWulf Co-founder and Chief Technology Officer, Nazar Khan, which details that regulatory approval of the contract is necessary to secure financing and finalize the arrangement between TeraWulf and its end user is provided as Exhibit AJE-5. Because Case No. 2026-00323 is a request for approval of a special contract where the Company is seeking approval within 30 days and the suspension period under KRS 278.190 is shorter than the statutory approval period for CPCNs in KRS 278.019, the separate case allows for the TeraWulf ESA to be approved sooner.

Q. IS THE COMPANY SEEKING APPROVAL OF ANY COMPONENT IN THIS CASE ON A SEPARATE TIMELINE?

A. Yes. The Company requests that the Commission issue an approval of the Venator Substation Project **no later than March 1, 2027**. This timeline is consistent with KRS 278.020(9) as well as past commission precedent and is critical to allow the Company to begin the clearing and grading work necessary to ensure that the Venator Substation Project is complete in time for Kentucky Power to provide service under the TeraWulf ESA.

Q. PLEASE IDENTIFY THE WITNESSES THAT WILL BE OFFERING TESTIMONY IN SUPPORT OF KENTUCKY POWER'S APPLICATION AND THE GENERAL SUBJECT MATTER OF THEIR TESTIMONIES.

A. Kentucky Power is presenting eight witnesses, in addition to myself, supporting the Company's proposals in this case. The list below summarizes the topics each witness discusses in their Direct Testimony:

WITNESS	TOPICS
Alex E. Vaughan	• Description of the TeraWulf ESA and the protections and benefits for existing customers included therein; • Kentucky Power's plan to provide the capacity and energy required under the TeraWulf ESA; and • Demonstration of benefits of the TeraWulf ESA and the Company's infrastructure investments for all customers
Michael J. Dilley	• Description of the Combined-Cycle Generation Project; • The project management, engineering, procurement, and construction of the Combined-Cycle Generation Project; • Identification of the milestones for construction activities and the estimated commercial operation dates for the Combined-Cycle Generation Project; and • The estimated total project capital cost for the Combined-Cycle Generation Project
Wyatt W. Lewis	• Ongoing O&M and Capital Forecast for the Combined-Cycle Generation Project; and • The operation and maintenance plans for the Combined-Cycle Generation Project
Clinton M. Stutler	• The natural gas procurement process for the Big Sandy Plant; and • The natural gas transportation and supply due diligence conducted related to the proposed Combined-Cycle Generation Project
Frank E. Blake	• Environmental compliance requirements for the Combined-Cycle Generation Project

WITNESS	TOPICS
Nicolas C. Koehler	• Planning process for the Venator Substation Project; and • Anticipated construction timeline for the Venator Substation Project
Emily S. Larson	• Siting process for the Venator Substation Project; and • Environmental compliance requirements for the Venator Substation Project
Abdul Rafay	• Engineering for the Venator Substation Project; and • Total estimated cost of the Venator Substation Project

VI. THE TERAWULF ESA

Q. PLEASE SUMMARIZE THE HISTORY OF THE TERAWULF ESA.

A. Kentucky Power and TeraWulf began discussing a possible data center development in the Company's service territory in March 2026. Based on those discussions, Kentucky Power initiated a transmission study to assess available transmission capacity. In May 2026, following negotiations, TeraWulf and Kentucky Power executed an initial Electric Service Agreement under which Kentucky Power would initially serve 500 MW of load. The terms of the initial ESA mirrored the updated large load provisions of Tariff I.G.S. The initial 500 MW will begin with a load ramp of 100 MW in October 2028.

In August 2026, TeraWulf and Kentucky Power began further negotiations to increase the load by an additional 500 MW load. The TeraWulf ESA is the result of those additional negotiations, and fully incorporates the terms of the initial ESA. The TeraWulf ESA is a special contract that enhances the large load provisions already found in Tariff I.G.S. thus providing additional protections and benefits to the Company's existing customers.

Q. PLEASE DESCRIBE THE LARGE LOAD PROVISIONS OF THE COMPANY'S TARIFF I.G.S.

A. Yes. To meet its obligation to serve new large loads that locate within its service territory while also protecting existing customers, the Company updated Tariff I.G.S. in Case No. 2024-00305 to include the following additional requirements for customers adding new or incremental loads of 150 MW or more:

- a 20-year contract term with a five-year notice period for termination;
- a minimum monthly billing demand of at least 90% of the customer's highest established demand;
- a requirement to provide collateral equal to 24 times the customer's previous maximum monthly non-fuel bill, subject to review and adjustments;
- a one-time payment equal to five years of minimum billing in the event of permanent closure before the contract term expires; and
- a five-year notice requirement for reducing contract capacity, with exceptions for mutual agreement.

The Commission approved the Company's large-load tariff noting:

> The Commission further finds that the tariff provisions appropriately balance Kentucky Power's need to ensure financial stability when taking on large-load customers and the need to protect existing customers from potential stranded costs. The requirement for long-term contractual commitments and financial collateral provides necessary safeguards for both Kentucky Power and its customers while allowing Kentucky Power to maintain system reliability.[2]

While these types of provisions have become more common throughout the country as data center development continues to expand, Kentucky Power's large load provisions in Tariff I.G.S are among the most stringent. Additional details regarding the protections provided

[2] Order at 5, *In the Matter of: Electronic Tariff Filing Of Kentucky Power Company To Revise Its Industrial General Service Tariff*, Case No. 2024-00305) (Ky. P.S.C. Mar. 18, 2025).

in Kentucky Power's large load provisions and the TeraWulf ESA is provided in Company Witness Vaughan's Direct Testimony.

Q. DOES THE TERAWULF ESA INCLUDE ANY DISCOUNTS OR EXEMPTIONS FOR TERAWULF?

A. No. In fact, the TeraWulf ESA goes well above tariff in many ways. TeraWulf will pay the full rate of the Company's Tariff I.G.S., with no discounts or exemptions. This agreement is designed to go above and beyond the tariff rates to provide meaningful benefits to Kentucky Power customers and further ensure that those existing customers do not bear the burden of the incremental costs associated with providing service to TeraWulf.

Q. HOW DOES THE TERAWULF ESA DIFFER FROM THE LARGE LOAD PROVISIONS OF TARIFF I.G.S.?

A. The TeraWulf ESA includes five provisions that differ from the standard large load provisions in Tariff I.G.S. These provisions:

- obligate TeraWulf to provide $100,000,000 in bill credits to the Company's residential customers;
- obligate TeraWulf to pay up to $465,000,000 in carrying charges on costs incurred by Kentucky Power during the construction of the Combined-Cycle Generation Project;
- establish a mechanism for energy pricing from the beginning of TeraWulf facility load ramp through the date the Combined-Cycle Generation Project is placed into service;
- provide for a variance from the full 20-year term for the second phase of the TeraWulf load ramp; and
- allow for a limited capacity reduction during the term not just arising from a facility closure.

Q. PLEASE SUMMARIZE THE IMPACT OF THESE PROVISIONS ON THE COMPANY'S EXISTING CUSTOMERS.

A. The provisions of the TeraWulf ESA provide additional meaningful benefits to existing customers in the following ways:

- $100,000,000 in residential bill credits payable by TeraWulf;
- lower rate billings for surcharges that allocate fixed costs based on a percentage revenue including the SSR and the ES;
- payment of up to $465,000,000 of carrying charges during the construction period of the Combined-Cycle Generation Project resulting in a lower cost asset and rate base when the plant goes into service in 2031; and
- use of a separate PJM subaccount during the period between when it begins taking service in October 2028 and when the Combined-Cycle Generation Project goes into service in April 2031, avoiding an increase in fuel costs during that period. Additionally, the TeraWulf ESA requires TeraWulf to pay Kentucky Power $17,000 per month to recover any costs associated with administering this PJM subaccount ensuring that TeraWulf pays for these incremental costs.

Company Witness Vaughan provides additional detail on each of these provisions in his Direct Testimony.

Q. PLEASE EXPLAIN HOW THE RESIDENTIAL BILL CREDITS WILL BE DISTRIBUTED TO CUSTOMERS.

A. Kentucky Power will apply these credits to residential customer bills in January, February, and March (for usage in December, January, and February) starting in 2029. The credit will be listed separately on residential bills and indicate that the credit is being provided by TeraWulf, or its end user.

Although it is not proposing a new tariff or requesting any approvals related to the residential bill credit in this case, the Company is exploring multiple options for the rate design of this credit as shown in Table AJE-1 below. The first option is a flat credit amount that would be applied evenly to each residential customer's bill. The second option is a

mechanism that shapes the bill credit with usage, so that customers using the most energy receive the largest credit, rather than providing all residential customers with the same amount of monthly bill credit. The final option is a hybrid approach that combines the flat credit and is still shaped by customer usage. This option balances customer impacts across varying levels of energy usage to align with the Company's new residential rate design that was approved in Case No. 2025-00257.

Table AJE-1

Residential Winter Bill Credits			
	Approximate Credit Amounts		
Customer Usage	Flat Credit	$0.015/per kwh	$10 flat credit + 0.0135/per Block 2 kWh
250 kWh	$25.84	$3.80	$10.00
500 kWh	$25.84	$7.50	$10.00
750 kWh	$25.84	$11.30	$12.00
1,000 kWh	$25.84	$15.10	$15.40
1,500 kWh	$25.84	$22.60	$22.20
2,000 kWh	$25.84	$30.20	$28.90
2,500 kWh	$25.84	$37.70	$35.70
3,000 kWh	$25.84	$45.30	$42.50
4,000 kWh	$25.84	$60.30	$56.00
5,000 kWh	$25.84	$75.40	$69.60

Q. WHEN WILL EXISTING CUSTOMERS BEGIN TO REALIZE THE LOWER RATE BILLINGS THAT THE TERAWULF ESA WILL PROVIDE?

A. The rate reductions for riders such as the SSR and ES will start when the Muskie Data Center begins to take service in October 2028. At that time, the calculation of those surcharge rates will be impacted by the increased load from the Muskie Data Campus.

Q. HAS THE COMPANY ESTIMATED WHAT THESE RATE SAVINGS WILL BE?

A. Yes. Company Witness Vaughan describes the estimated savings from the TeraWulf ESA in his Direct Testimony. These savings are summarized as follows:

Table AJE-2

	2029	2030	2031	2032
SSR Savings	$14,166,796	$21,383,843	$21,383,843	$21,383,843
ES Savings	$11,363,665	$17,152,701	$17,152,701	$17,152,701
GR Savings	$8,337,960	$12,997,665	$3,249,416	$-
Residential Bill Credits	$10,000,000	$10,000,000	$10,000,000	$10,000,000
Total Existing Customer Savings	$43,868,420	$61,534,209	$51,785,960	$48,536,544
Current Total Revenue	$734,884,728			
Average % Reduction to Overall Revenues *	6.0%	8.4%	7.0%	6.6%

*Class allocation has not been completed, and impacts are not to be interpreted as a specific rate decrease to a particular class of customers.

Q. HAS THE COMPANY ESTIMATED THE TOTAL BENEFIT OF THE TERAWULF ESA TO EXISTING CUSTOMERS?

A. Yes. While Kentucky Power has an obligation to serve customers within its service territory, the TeraWulf ESA allows Kentucky Power to provide service to the Muskie Data Campus in a manner that both protects and provides benefits to existing customers. Again, Company Witness Vaughan describes these benefits in more detail, but they are summarized below:

Table AJE-3

TeraWulf ESA Provisions	Life of Contract $
Avoided Return on and of CC Financing Charges	$ 1,302,095,123
Residential Bill Credits	$ 100,000,000
Transitional Energy - Fuel Cost Savings	$ 195,246,237
Total TeraWulf ESA Additional Benefits	$ 1,597,341,360
Standard Tariff Items	
SSR Savings	$ 334,924,435
ES Savings	$ 200,043,381
Total Standard Benefits	$ 534,967,816
Total Customer Benefits	**$ 2,132,309,176**

Q. HAS THE COMPANY EDUCATED CUSTOMERS AND COMMUNITIES ABOUT THE POTENTIAL BENEFITS OF ECONOMIC DEVELOPMENT AND LARGE LOAD GROWTH?

A. Yes. Kentucky Power has actively engaged customers and communities across our service territory to explain how economic development and large-load growth can benefit existing customers through greater rate stability and opportunities to reduce future rate increases.

Q. WHAT HAPPENS IF THE COMMISSION DOES NOT APPROVE THE ESA AS SIGNED OR MODIFIES IT?

A. If the Commission does not approve the TeraWulf ESA, Kentucky Power would still have the obligation to provide 500 MW of capacity and energy to the Muskie Data Center. This service would be provided under Tariff I.G.S. rates, but the additional customer benefits and protections that were included in the TeraWulf ESA would not be achieved.

VII. SERVING THE TERAWULF ESA LOAD

Q. PLEASE DESCRIBE KENTUCKY POWER'S GENERATION PORTFOLIO.

A. Kentucky Power's generation portfolio currently consists of Big Sandy Unit 1 and the Mitchell generating station. Big Sandy Unit 1 is a 295 MW natural gas plant. The Mitchell plant is comprised of two super-critical pulverized coal-fired baseload generating units. Mitchell Unit 1 has a nameplate capacity of 770 MW and Mitchell Unit 2 has a nameplate capacity of 790 MW, for a total nameplate capacity of 1,560 MW. Both units were placed in service in 1971. Kentucky Power owns a 50% undivided interest in this plant. Kentucky Power's owned generation portfolio totals 1,075 MW.

Q. DOES THE TERAWULF ESA CREATE AN ENERGY AND CAPACITY NEED FOR THE COMPANY?

A. Yes. The addition of the 1,000 MW Muskie Data Campus load creates a significant incremental energy and capacity need for Kentucky Power. The Company plans to meet that need through the construction of the Combined-Cycle Generation Project and the Bridge Capacity Agreement (together, the "Capacity Plan"). The Company will also work with the AEPSC Commercial Operations team to be allocated additional annual capacity in the Company's fixed resource requirement ("FRR") plan to meet any additional capacity needs. The Company's capacity position as proposed in this case is shown in Table AJE-4 below:

Table AJE-4

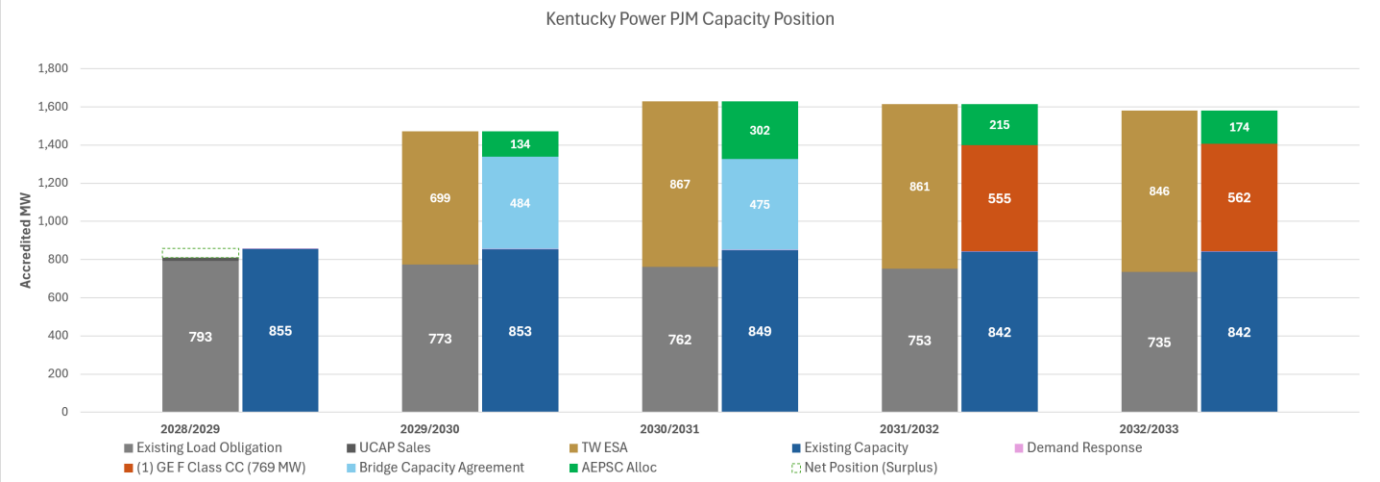

Q. PLEASE DESCRIBE THE COMBINED-CYCLE GENERATION PROJECT.

A. The Combined-Cycle Generation Project is a 769 MW natural gas combined-cycle power plant on the site of Kentucky Power's Big Sandy Plant near Louisa, Kentucky. The Combined-Cycle Generation Project will consist of two natural gas-fired combustion turbine generators, associated heat recovery steam generators, one steam turbine generator, environmental control equipment, and the balance-of-plant facilities necessary for the safe, reliable, and environmentally compliant operation of the generating facility. The Combined-Cycle Generation Project is expected to reach commercial operation in the second quarter of 2031 and will have a useful life of 40 years.

A more detailed discussion of the Combined-Cycle Generation Project, including the construction process and expected operations and maintenance is included in the Direct Testimonies of Company Witnesses Dilley and Lewis. A discussion of the process for determining how natural gas will be provided to the Combined-Cycle Generation Project is included in Company Witness Stutler's Direct Testimony. Finally, Company Witness

Blake describes the environmental compliance and permitting requirements associated with the Combined-Cycle Generation Project.

Q. WHAT IS THE PROJECTED COST OF THE COMBINED CYCLE-GENERATION PROJECT?

A. The estimated cost of the Combined-Cycle Generation Project is approximately $2.81 billion. Additional detail regarding the estimated cost of Combined-Cycle Generation Project is provided in Company Witness Dilley's Direct Testimony. The forecast operations and maintenance and capital costs over the lifetime of the Combined-Cycle Generation Project is described in Company Witness Lewis's Direct Testimony.

Q. PLEASE DESCRIBE THE BRIDGE CAPACITY AGREEMENT.

A. The Bridge Capacity agreement is a two-year capacity agreement between AEP Generation Resources Inc. ("AGR") and AEPSC, as agent for Kentucky Power, through which Kentucky Power will partially fill the balance of the Company's capacity requirement. A copy of the Bridge Capacity Agreement is provided as Confidential Exhibit AJE-6. Company Witness Vaughan describes the Bridge Capacity Agreement in greater detail in his Direct Testimony.

Q. HOW DID THE COMPANY DETERMINE THAT THIS CAPACITY PLAN WAS THE BEST APPROACH TO MEETING ITS CAPACITY AND ENERGY NEEDS?

A. Kentucky Power continually evaluates its energy and capacity needs. Prior to signing any large load customer, Kentucky Power works with the AEPSC resource planning and commercial and market operations teams to ensure sufficient available capacity and to evaluate options. As is described in more detail in Company Witness Vaughan's Direct Testimony, prior to signing the initial 500 MW ESA with TeraWulf, Kentucky Power had

planned to build a combustion turbine. With the addition of the energy-dependent load at the Muskie Data Campus, additional capacity and energy became essential. Kentucky Power leadership made the decision to proceed with constructing a natural gas combined-cycle generation resource. To confirm its decision and determine whether additional capacity and generation may be available in the market, Kentucky Power issued a request for proposals ("RFP") for both a purchase power agreement and a purchase sale agreement.

Q. PLEASE DESCRIBE THE RFPS THAT KENTUCKY POWER ISSUED.

A. Kentucky Power issued two RFPs: an RFP for a purchase power agreement and an RFP for the purchase of 800 MW of nameplate accredited capacity. Copies of these RFPs are provided as Exhibits AJE-7 and AJE-8, respectively.

Q. PLEASE DESCRIBE THE REQUIREMENTS WITHIN THE RFPS.

A. Both the purchase sale agreement and the purchase power agreement RFPs required that the units be new combined cycle generation within Kentucky. Not only would the requested capacity and energy be thermal, dispatchable resources, but also the RFP requested that the generating facility would be located within the Commonwealth to provide a "steel in the ground" resource. No bids were submitted for either RFP.

Q. WILL THE COMBINED-CYCLE GENERATING PROJECT AND THE BRIDGE CAPACITY AGREEMENT MEET THE FULL ADDITIONAL LOAD UNDER THE TERAWULF ESA?

A. Not completely. Kentucky Power will continue to work with the AEPSC resource planning and commercial and market operations teams to ensure sufficient capacity and energy for all customers in the near-term. If the Commission approves the Company's requests in this

case and in Case No. 2026-00323, Kentucky Power will continue its longer-term capacity planning.

Q. IS KENTUCKY POWER IN CONVERSATION WITH OTHER LARGE LOAD CUSTOMERS FOR WHICH IT MAY NEED TO SECURE ADDITIONAL CAPACITY?

A. Yes. Kentucky Power is engaged in ongoing conversations with other large load customers seeking to locate in the Company's service territory. Kentucky Power will seek to include benefits similar to those in the TeraWulf ESA for existing customers in any future agreements to serve large load customers.

VIII. VENATOR SUBSTATION PROJECT

Q. PLEASE DESCRIBE THE VENATOR SUBSTATION PROJECT.

A. The Venator Substation Project includes the construction of a new 765/345 kV substation in Boyd County, Kentucky. The substation is necessary to accommodate TeraWulf's request for new 345 kV service at the Muskie Data Campus.

As Company Witnesses Koehler and Rafay describe in their Direct Testimonies, the proposed substation will provide the transmission infrastructure necessary to transform power from the nearby 765 kV transmission system to 345 kV to serve TeraWulf's requested load. Company Witness Koehler addresses the need for the Venator Substation Project and the transmission planning process, Company Witness Rafay describes the proposed facilities and engineering, and Company Witness Larson addresses siting, the alternative sites considered, and selection of the proposed site.

Q. DID THE COMPANY CONSIDER ALTERNATIVES TO THE VENATOR SUBSTATION PROJECT?

A. Yes. The Company considered alternatives for serving TeraWulf's requested load, including whether the load could be served using the existing transmission system. As discussed in Company Witness Koehler's Direct Testimony, the existing system cannot accommodate the requested load without the proposed transmission improvements. Company Witness Rafay provides additional detail regarding the engineering of the proposed facilities, while Company Witness Larson addresses the alternative substation sites considered and the Company's selection of the proposed site.

Q. DOES THE SUBSTATION WORK PROPOSED IN THIS CASE COMPLETE THE TRANSMISSION WORK NECESSARY TO SERVE THE CUSTOMER?

A. No. As Company Witness Koehler describes in his Direct Testimony, the transmission lines will be necessary to connect the proposed substation to the existing transmission system and TeraWulf's delivery point. Those facilities will be the subject of a subsequent application for a CPCN.

Q. WHY DID THE COMPANY'S APPLICATION NOT INCLUDE A REQUEST FOR A CPCN FOR THE NECESSARY TRANSMISSION LINES?

A. The decision to submit two applications is a function of timing. Clearing and grading work on the site of the Venator Substation Project must begin in March for the Company to complete the substation in time to provide service to the Muskie Data Campus under the TeraWulf ESA. At this time, the transmission line siting work is ongoing. Company Witness Larson describes the additional routing and siting work necessary to support the subsequent transmission line CPCN application. Table NCK-1 in Company Witness

Koehler's Direct Testimony provides the principal construction milestones of the Venator Substation Project.

Q. WHEN DOES THE COMPANY ANTICIPATE FILING THE CPCN APPLICATION FOR THE TRANSMISSION LINES?

A. The Company anticipates making the transmission line application in the first quarter of 2027.

Q. WHAT IS THE PROJECTED COST OF THE VENATOR SUBSTATION PROJECT?

A. The estimated cost of the Venator Substation Project is approximately $285,000,000. As Company Witness Rafay describes in his Direct Testimony, this estimate reflects the facilities and equipment necessary to construct the proposed substation. Company Witness Rafay also addresses the estimated annual operating and maintenance costs and ad valorem taxes associated with the Venator Substation Project.

Q. WILL KENTUCKY POWER'S EXISTING CUSTOMERS' TRANSMISSION RATES INCREASE BECAUSE OF THE VENATOR SUBSTATION PROJECT?

A. No. The costs of the Project will be allocated to the PJM AEP zone. Kentucky Power will be allocated based on its 12 coincident peak allocation (currently 5.149%) and the costs will be recovered from other load serving entities within the AEP Zone. The increase in annual transmission revenue requirement to Kentucky Power resulting from the Venator Substation Project will be offset by the increase in transmission revenues paid by TeraWulf. Additional detail regarding transmission cost allocation is provided in Company Witness Vaughan's Direct Testimony.

Q. HAS TERAWULF POSTED COLLATERAL FOR THE CONSTRUCTION OF THE VENATOR SUBSTATION PROJECT?

A. Yes. In accordance with the terms of the LOA between Kentucky Power and DB Long Hunts Finance LLC, TeraWulf is required to post collateral to support the development of the Venator Substation Project and the subsequent transmission line construction. The collateral, in the form of a letter of credit is to be posted over time according to the schedule in the LOA. The first installment of $50,000,000 has been posted, and the next installment of $50,000,000 is due to be posted by December 30, 2026. The purpose of the collateral is to ensure that other zonal transmission customers would not pay for the substation investment if TeraWulf were to not ultimately come online. If for some reason TeraWulf did not finalize its facility in EastPark, its collateral would cover the entire estimated cost of the Venator Substation Project and associated transmission lines. If that were to occur, Kentucky Power would own significant upgrades to transmission infrastructure that could be used to serve other customers at this site.

IX. THE COMBINED-CYCLE GENERATING PROJECT AND THE VENATOR SUBSTATION PROJECT ARE REQUIRED FOR THE PUBLIC CONVENIENCE AND NECESSITY, IS FOR A PROPER PURPOSE, AND WILL NOT RESULT IN WASTEFUL DUPLICATION

Q. ARE THE COMBINED-CYCLE GENERATING PROJECT AND VENATOR SUBSTATION PROJECT REQUIRED FOR THE PUBLIC CONVENIENCE AND NECESSITY?

A. Yes. As described above and in the Direct Testimonies of other witnesses in this case, the Company must construct the Combined-Cycle Generating Project and the Venator Substation in order to meet its obligation to serve the Muskie Data Center under the

TeraWulf ESA. The analysis shows that the Combined-Cycle Generating Project and the Venator Substation are the lowest cost, reasonable option to meet this obligation.

Q. ARE THE COMBINED-CYCLE GENERATING PROJECT AND THE VENATOR SUBSTATION PROJECT FOR A PROPER PURPOSE?

A. Yes. Kentucky Power is a corporation organized under the laws of the Commonwealth of Kentucky. It is regulated by the Commission and, pursuant to Kentucky's Certified Territory Statutes, KRS 278.016–278.018, possesses the exclusive right and obligation to provide retail electric service within its certified territory in parts of 20 counties in Kentucky. The Company is requesting to construct the Combined-Cycle Generating Project and the Venator Substation to meet its obligations as an electric utility providing service within its certified territory within the Commonwealth of Kentucky. Specifically, the Combined-Cycle Generating Project and the Venator Substation Project are both required to provide adequate, efficient, and reasonable service to its customers. This Application is for a proper purpose because it ensures that Kentucky Power is able to provide generation and transmission facilities necessary to meet its customers' capacity and energy needs.

Q WILL THE COMBINED-CYCLE GENERATING PROJECT RESULT IN WASTEFUL DUPLICATION?

A. No. Constructing the Combined-Cycle Generating Project to meet its obligation to serve the Muskie Data Center under the TeraWulf ESA does not duplicate any existing facilities and does not result in an excess of capacity beyond need, or excess investment in relation to the productivity and efficiency to be gained. In fact, as explained above and in Company Witness Vaughan's Direct Testimony, there is a clear need to invest in efficient,

dispatchable, baseload generation to serve the increased load on the Company's system. The Company's analysis demonstrates that the Combined-Cycle Generation Project is the lowest-cost reasonable alternative for doing so.

Q WILL THE VENATOR SUBSTATION PROJECT RESULT IN WASTEFUL DUPLICATION?

A. No. Constructing the Venator Substation Project to meet its obligation to serve the Muskie Data Center under the TeraWulf ESA does not duplicate any existing facilities and does not result in an excess of capacity beyond need, or excess investment in relation to the productivity and efficiency to be gained. The Venator Substation Project is required to provide service to the Muskie Data Campus at the proper voltage. The Company's analysis demonstrates that the Venator Substation Project is the lowest-cost reasonable alternative for doing so.

X. ECONOMIC IMPACT ANALYSIS

Q. HAS KENTUCKY POWER ESTIMATED THE ECONOMIC DEVELOPMENT BENEFITS OF CONSTRUCTING THE COMBINED-CYCLE GENERATION PROJECT AND THE VENATOR SUBSTATION PROJECT?

A. Yes. Kentucky Power has estimated the economic development benefits of constructing both the Combined-Cycle Generation Project and Venator Substation Project. The Company used an IMPLAN multi-regional input-out model to estimate the economic impacts to Kentucky Power's service area, as well as the remainder of the Commonwealth of Kentucky. The results of this model describe the effect of the Combined-Cycle Generation Project and Venator Substation Project on employment, labor income, and value added to gross regional product. The economic impacts of the Company's proposed infrastructure investments are separated into three distinct phases: Combined-Cycle

Generation Project construction, Venator Substation Project construction, and ongoing operations of the Combined-Cycle Generation Project with 25 permanent employees.

Q. PLEASE DESCRIBE THE ECONOMIC IMPACTS THAT WILL RESULT DURING THE CONSTRUCTION OF THE COMBINED-CYCLE GENERATION PROJECT.

A. Constructing the Combined-Cycle Generation Project is estimated to create or support approximately 500 jobs in the Commonwealth annually over the construction period. These construction jobs would be accompanied by nearly $105 million in supported wages. The construction of the Combined-Cycle Generation Project will result in an addition of nearly $170 million in gross regional product.

Q. PLEASE DESCRIBE THE ECONOMIC IMPACTS THAT WILL RESULT DURING THE CONSTRUCTION OF THE VENATOR SUBSTATION PROJECT.

A. Constructing the Venator Substation Project over three years is expected to create or support 167 annual jobs for the Commonwealth, including 119 direct jobs. The construction activity associated with Venator Substation Project would support labor income of more than $35 million, and an increase of roughly $56.7 million in gross regional product.

Q. WHAT ARE THE ESTIMATED ECONOMIC IMPACTS OF THE ONGOING OPERATION OF THE COMBINED-CYCLE GENERATION PROJECT?

A. The activities associated with the ongoing operations of the Combined-Cycle Generation Project are estimated to create 73 jobs overall for the Commonwealth each year that it operates, including 25 direct jobs. This would support annual labor income of more than $7 million, and nearly $35 million in annual gross regional product.

Q. WILL THE COMBINED-CYCLE GENERATION PROJECT AND THE VENATOR SUBSTATION PROJECT INCREASE TAX REVENUES?

A. Yes. During the construction phase, the Combined-Cycle Generation Project is expected to provide $3.14 million in local taxes and $9.49 million in state taxes and the Venator Substation Project is expected to provide $1.05 million in local taxes and $3.17 million in state taxes. During operations, the Combined-Cycle Generation Project is expected to provide $2.12 million in local taxes and $5.44 million in state taxes.

Q. PLEASE SUMMARIZE TOTAL ESTIMATED ECONOMIC IMPACT OF THE COMBINED-CYCLE GENERATION PROJECT AND THE VENATOR SUBSTATION PROJECT.

A. The Combined-Cycle Generation Project and Venator Substation Project are estimated to bring material positive economic impacts to the Commonwealth of Kentucky and the Kentucky Power Service Territory. These impacts are summarized below:

Table AJE-5

	CCGP Construction	VSP Construction	TOTAL Construction	CCGP Ongoing
Jobs	501	167	668	73
Direct	355	119	474	25
Indirect	50	17	67	28
Induced	95	32	127	20
Labor Income	$104,991,295	$35,113,759	$140,105,054	$7,446,593
Gross Regional Product	$169,672,923	$56,746,181	$226,419,105	$34,546,415
Local Taxes	$3,136,343	$1,048,927	$4,185,270	$2,124,430
State Taxes	$9,488,377	$3,173,328	$12,661,705	$5,442,453
Total Taxes	$12,624,720	$4,222,255	$16,846,976	$7,566,883

XI. THE BRIDGE CAPACITY AGREEMENT IS FOR A LAWFUL OBJECT, IS NECESSARY AND APPROPRIATE TO MEET THE COMPANY'S OBLIGATION TO SERVE ITS CUSTOMERS, AND DOES NOT RESULT IN WASTEFUL DUPLICATION

Q. ARE YOU FAMILIAR WITH THE REQUIREMENTS OF KRS 278.300(3) AS IT RELATES TO HOW THE COMMISSION ANALYZES APPLICATIONS FOR AGREEMENTS SIMILAR TO THE BRIDGE CAPACITY AGREEMENT?

A. Yes. While I am not an attorney, I understand that KRS 278.300(3) lays out three elements an applicant must demonstrate for the Commission to authorize the Company to enter into the Bridge Capacity Agreement as an "evidence of indebtedness."

First, the financial obligations assumed under the Bridge Capacity Agreement must be for a lawful object within the corporate purposes of the utility. Second, the financial obligations assumed under the Bridge Capacity Agreement must be necessary or appropriate for, or consistent with the proper performance by the utility of its service to the public and must not impair its ability to perform that service. Finally, the Bridge Capacity Agreement must be reasonably necessary and appropriate for that purpose. When determining whether the Bridge Capacity Agreement is reasonably necessary and appropriate for that purpose, it is my understanding that the Commission analyzes whether the capacity to be provided under the Bridge Capacity Agreement is needed and will not result in wasteful duplication. The Bridge Capacity Agreement meets all of these requirements.

Q. ARE THE FINANCIAL OBLIGATIONS TO BE ASSUMED UNDER THE BRIDGE CAPACITY AGREEMENT FOR A LAWFUL OBJECT WITHIN KENTUCKY POWER'S CORPORATE PURPOSE?

A. Yes. Kentucky Power is a corporation organized under the laws of the Commonwealth of Kentucky. It is regulated by the Commission and, pursuant to Kentucky's Certified

Territory Statutes, KRS 278.016–278.018, possesses the exclusive right and obligation to provide retail electric service within its certified territory in parts of 20 counties in Kentucky. The financial obligations assumed by Kentucky Power under the Bridge Capacity Agreement are in connection with a short-term contract for the purchase of capacity to meet Kentucky Power's obligation as an electric utility providing service within its certified territory within the Commonwealth of Kentucky, to provide adequate, efficient and reasonable service to its Kentucky customers. Specifically, the Bridge Capacity Agreement will allow the Company to serve the Muskie Data Center under the TeraWulf ESA until the Combined-Cycle Generating Project is placed in service. As such, the Bridge Capacity Agreement, and Kentucky Power's financial obligations under the Bridge Capacity Agreement, are for a lawful object within the Company's corporate purpose.

Q. ARE THE FINANCIAL OBLIGATIONS TO BE ASSUMED BY KENTUCKY POWER UNDER THE BRIDGE CAPACITY AGREEMENT NECESSARY AND APPROPRIATE FOR KENTUCKY POWER TO MEET ITS OBLIGATION TO SERVE ITS CUSTOMERS?

A. Yes. As mentioned above, the Company has identified a need for capacity to serve the Muskie Data Center under the TeraWulf ESA until such time as the Combined-Cycle Generating Project is placed in service. As discussed in Company Witness Vaughan's Direct Testimony, the Bridge Capacity Agreement provides cost-effective capacity to meet the requirements during this period.

Q. IS THE CAPACITY TO BE PROVIDED UNDER THE BRIDGE CAPACITY AGREEMENT NEEDED?

A. Yes. As explained above and in Company Witness Vaughan's Direct Testimony, there is a need for the Company to acquire capacity to serve the Muskie Data Center under the TeraWulf ESA until such time as the Combined-Cycle Generating Project is placed in service.

Q. WILL THE CAPACITY PROVIDED UNDER THE BRIDGE CAPACITY AGREEMENT RESULT IN WASTEFUL DUPLICATION?

A. No. The Bridge Capacity Agreement does not duplicate any existing facilities and does not result in an excess of capacity over need, or excess investment in relation to the productivity and efficiency to be gained. There is a clear need for the Company to acquire capacity to serve the Muskie Data Center under the TeraWulf ESA until such time as the Combined-Cycle Generating Project is placed in service. As described in Company Witness Vaughan's Direct Testimony, the Bridge Capacity Agreement is the lowest-cost, reasonable alternative to meet this need.

XII. FINANCING

Q. HOW DOES KENTUCKY POWER PLAN TO FINANCE THE COMBINED-CYCLE GENERATION PROJECT AND THE VENATOR SUBSTATION PROJECT?

A. Kentucky Power will finance these projects using a combination of internally generated funds, debt issuances, and possible equity infusions from AEP in a manner consistent with Kentucky Power's investment grade credit rating capitalization structure and its Commission authorized capital structure.

Q. WILL THE ADDITION OF THESE PROJECTS AND THE TERAWULF LOAD MATERIALLY IMPACT THE FINANCIAL CONDITION OF KENTUCKY POWER?

A. Yes. These projects represent a unique opportunity that will have a positive impact on the financial health of the Company while simultaneously reducing costs for other customers.

XIII. COST RECOVERY

Q. WHAT IS KENTUCKY POWER'S POLICY REGARDING COST RECOVERY OF THE COSTS ASSOCIATED WITH THESE PROJECTS?

A. Kentucky Power's policy is that growth should pay for growth and that all customers should benefit from growth on the system.

Q. HOW WILL YOU ENSURE THAT OVERALL COSTS FOR EXISTING CUSTOMERS DO NOT INCREASE BECAUSE OF THESE PROJECTS?

A. Kentucky Power's proposal is structured so that existing customers will not experience an increase in the generation revenue requirement from the Combined-Cycle Generating Project, the Venator Substation Project, and the Bridge Capacity Agreement. In fact, total customer bills will decrease with the Company's proposal. Rather than directly assigning all costs to the large load customer, the proposed allocation allows existing customers to benefit from the additional load while protecting them from an increase in generation costs. Additionally, the incremental costs of the capacity purchases required to serve TeraWulf will be recovered from the revenues associated with TeraWulf's load and will not increase costs for existing customers. Company Witness Vaughan explains the proposed allocation and recovery methodology and quantifies the resulting impacts to existing customers in his Direct Testimony.

XIV. CONCLUSION

Q. DOES THIS CONCLUDE YOUR DIRECT TESTIMONY?

A. Yes, it does. The Muskie Data Center and the investments necessary to provide service under the TeraWulf ESA present an opportunity to transform Kentucky Power's service territory for the better. The TeraWulf ESA provides considerable benefits to Kentucky Power's existing customers. The investments proposed in this case, the Combined-Cycle Generation Project, the Bridge Capacity Agreement, and the Venator Substation Project, are the result of a thorough evaluation of alternatives for providing service under the TeraWulf ESA. They are the lowest-cost, reasonable alternatives and should be approved by the Commission.

EXHIBIT AJE-1

TeraWulf Electric Service Agreement

Kentucky Power Company
Amended and Restated Electric Service Agreement
Tariff I.G.S.

This Amended and Restated Electric Service Agreement (this "Contract") is entered into as of the Effective Date set forth below by and between Kentucky Power Company (the "Company") and DB Long Hunts Data LLC, a Delaware limited liability company (the "Customer"; each of the Company and the Customer individually a "Party" and, collectively, the "Parties"). Upon the date that this Contract is approved by the Kentucky Public Service Commission (the "Commission") in an order reasonably acceptable to both Parties (the "Commission Contract Approval Date"), this Contract will supersede in its entirety that Electric Service Agreement between the Company and DB Long Hunts Finance LLC, dated May 22, 2026 and subsequently assigned to the Customer (the "Original Contract"), and the Original Contract will have no further force or effect. Until the Commission Contract Approval Date, the Original Contract remains in full force and effect. This Contract amends, restates, and replaces in its entirety that certain Amended and Restated Electric Service Agreement between the Parties effective October 1, 2026, which was executed by the Parties but not submitted to the Commission (the "Prior Restated Contract"), and, effective as of the Effective Date, the Prior Restated Contract is superseded and will have no further force or effect.

For and in consideration of the mutual covenants and agreements contained in this Contract and the Tariff I.G.S. (as defined below), the Company and the Customer hereby agree as follows:

1. Terms not otherwise defined herein have the same meaning as those terms are given in the Company's standard Terms and Conditions of Service and approved tariff(s) (including Tariff Industrial General Service, the "Tariff I.G.S.").

2. The Company agrees to furnish to the Customer and the Customer agrees to take and purchase from the Company, subject to the terms of this Contract and the Company's standard Terms and Conditions of Service and the Tariff I G S , as regularly filed with the Commission, all the electric capacity and energy of the character specified in this Contract for the premises located at 105 S. Commerce Drive, located within Boyd and Greenup County, Kentucky, with an approximate center of the premises located at 38 401 , -82. 93 the "Premises"). The Customer intends to develop, construct and operate a high performance computing facility on the Premises (the "Facilit ") The Customer represents and warrants to the Company that the Customer or one of its commonly controlled affiliates has, and will have during the term of this Contract, good and valid title to, or a valid leasehold interest in, all of the real property that comprises such Premises

3. The Company's standard Terms and Conditions of Service and all applicable provisions of Tariff I.G.S. are binding on the Customer from the Effective Date, except as modified by this Contract Electric service shall be deemed to be available hereunder and billing under the Tariff I.G.S. shall begin when sufficient transmission and generation are both available to the Customer's Premises, whether or not Customer is actually consuming energy, but no earlier than October 13, 2028 for up to the first 500 MW to be provided under this Contract ("Phase One") and no earlier than July 31, 2029 for up to the second 500 MW to be provided under this Contract ("Phase Two") The Company will notify the Customer in writing as soon as reasonably practicable prior to the capacity start date of each Load Ramp Contract Capacity set forth in **Exhibit A** (each such additional date, a "Load Ramp Contract Capacity Start Date"), but, in each case, in no event less than thirty (30) days prior thereto. As set forth on **Exhibit A**, the estimated capacity start date for the first 100 MW of Load Ramp Contract Capacity is October 2028, with the subsequent Load Ramp Contract Capacity start dates following thereafter. As described on **Exhibit A**, the maximum contract capacity at the Premises is 1000 MW (the "Maximum Contract Capacity").

4. Electric service under Phase One shall be deemed to be available hereunder and billing under Tariff I.G.S. shall begin when sufficient transmission and generation are both available to the Customer's Premises, whether or not Customer is actually consuming energy, but no earlier than October 13, 2028 (the "Phase One In-Service Date"). Electric service under Phase Two shall be deemed to be available hereunder and billing under Tariff I.G.S. shall begin when sufficient transmission and generation are both available to the Customer's Premises, whether or not Customer is actually consuming energy, but no earlier than July 31, 2029 (the "Phase Two In-Service Date"). The Initial Contract Term for the Phase One first 500 MW will be twenty (20) years from the Phase One In-Service Date (the "Phase One Initial Contract Term"). The Initial Contract Term for the Phase Two second 500 MW will be fifteen (15) years from the Phase Two In-Service Date (the "Phase Two Initial Contract Term"). Upon expiration of the Phase One Initial Contract Term, service under this Contract for the corresponding 500 MW will automatically renew and continue unless the Customer provides the Company prior written notice of cancellation at least 42 months before the effective date of cancellation. Upon expiration of the Phase Two Initial Contract Term, service under this Contract for the corresponding 500 MW will automatically renew and continue unless the Customer provides the Company prior written notice of cancellation at least 42 months before the effective date of cancellation.

5. **Phase One Capacity Reduction Termination.**

   a. Customer may, without payment of any exit fee or any penalty, reduce its contract capacity for service after the first ten (10) years of the Phase One Initial Contract Term by up to 20%, in total, by giving the Company at least 42 months written notice prior to the beginning of the PJM Delivery Year for which the reduction is sought. For avoidance of doubt, written notice can be provided during the first ten years of the Phase One Initial Contract Term. Regardless of the number of notices provided, the total capacity reduction shall not exceed 20%, unless by mutual agreement of the Customer and Company, which the Company shall only grant in circumstances that are not detrimental to the Customer, the Company, and all other customers.

   b. For service during years eleven (11) through twenty (20) of the Phase One Initial Contract Term, Customer may terminate its contract or reduce its contract capacity beyond 20% by giving the Company at least 42 months written notice prior to the beginning of the PJM Delivery Year for which the reduction or termination is sought, subject to payment of a capacity reductio termination fee (the "Phase One Exit Fee"). For avoidance of doubt, written notice can be provided prior to year eleven of the Phase One Initial Contract Term. The Phase One Exit Fee shall be due and payable to the Company upon the effective date of contract termination or capacity reduction. The Phase One Exit Fee shall be calculated as the lesser of five (5) years or the remaining months of the Phase One Contract Term of expected minimum billing under Tariff I.G.S. in excess of the 20 allowed capacity reduction, minus the Customer's estimated reduction in allocated PJM LSE OATT transmission charges to the Company.

   c. After the Phase One Initial Contract Term there shall be no Phase One Exit Fee.

   d. The Company will use reasonable efforts, consistent with its obligations as a public utility, to mitigate the Phase One Exit Fee amount owed or paid by the Customer by evaluating the opportunity to assign the terminate reduced capacity to serve a new customer under Tariff I G.S., to expand service to existing customers under Tariff I.G.S., or otherwise secure offsetting expected revenues The remainder of any mitigating amounts owed to the Customer shall be delivered to the Customer, or its designated successor, after all outstanding balances have been resolved.

6. **Phase Two Capacity Reductions/Termination**.

a. Customer may, without payment of any exit fee or any penalty, reduce its contract capacity for service after the first ten (10) years of the Phase Two Initial Contract Term by up to 20% in total, by giving the Company at least 42 months written notice prior to the beginning of the PJM Delivery Year for which the reduction is sought. For avoidance of doubt, written notice can be provided during the first ten years of the Phase Two Initial Contract Term. Regardless of the number of notices provided, the total capacity reduction shall not exceed 20%, unless by mutual agreement of the Customer and Company, which the Company shall only grant in circumstances that are not detrimental to the Customer, the Company, and all other customers

b. For service during years eleven (11) through fifteen (15) of the Phase Two Initial Contract Term, Customer may terminate its contract or reduce its contract capacity beyond 20% by giving the Company at least 42 months written notice prior to the beginning of the PJM Delivery Year for which the reduction or termination is sought, subject to payment of a capacity reduction/termination fee (the "Phase Two Exit Fee"). For avoidance of doubt, written notice can be provided prior to year eleven of the Phase Two Initial Contract Term. The Phase Two Exit Fee shall be due and payable to the Company upon the effective date of contract termination or capacity reduction. The Phase Two Exit Fee shall be calculated as the lesser of five (5) years or the remaining months of the Phase Two Contract Term of expected minimum billing under Tariff I.G.S. in excess of the 20% allowed capacity reduction, minus the Customer's estimated reduction in allocated PJM LSE OATT transmission charges to the Company.

c. After the Phase Two Initial Contract Term there shall be no Phase One or Phase Two Exit Fee.

d. The Company will use reasonable efforts, consistent with its obligations as a public utility, to mitigate the Phase Two Exit Fee amount owed or paid by the Customer by evaluating the opportunity to assign the terminated/reduced capacity to serve a new customer under Tariff I.G.S., to expand service to existing customers under Tariff I.G.S., or otherwise secure offsetting expected revenues. The remainder of any mitigating amounts owed to the Customer shall be delivered to the Customer, or its designated successor, after all outstanding balances have been resolved.

7. To assist the Company in the efficient planning and operation of its system a coordination committee ("Coordination Committee") shall be established The Coordination Committee will include designated representatives of the Company and Customer. The Coordination Committee will meet at least quarterly where business plans, including the anticipated expansion or reduction in demand or energy usage of Customer, can be provided for the benefit of both Parties. Confidential information will be provided with appropriate safeguards. The Coordination Committee will have no authority over the management, operations or decision making of either Party.

8. The electric energy delivered pursuant to this Contract shall be alternating current at approximately 345,000 volts and shall be delivered to the Customer's substation located on Customer's Premises described herein, which shall constitute the point of delivery under this Contract. The said electric energy shall be delivered at reasonably close maintenance to constant potential and frequency, and

it shall be measured by a meter or meters owned and installed by the Company and located inside the Company's substation and metered at 345,000 volts.

9. Except as modified by this Contract, the Customer and the Company agree that the Customer will receive service under the Company's Tariff I.G.S. The Customer agrees to pay the Company monthly for electric capacity and energy delivered hereunder (including, as applicable, minimum monthly charges) at the rates and under the provisions of the Company's Tariff I.G.S., as long as that schedule is in effect, and subject to **Exhibit A** to this Contract. In the event that Tariff I.G.S. is replaced by a new or revised Tariff schedule incorporating different rates or provisions, or both, in each case as approved by the Commission, the Company and the Customer understand and agree that the Company will continue to provide service, and the Customer will continue to take service under this Contract subject to such changed provisions, and that the Customer will pay for such service at the new rates on and after the date such rates become effective.

10. Except as modified by this Contract, the Customer is subject to all Commission approved rates and terms and conditions of service under Tariff I.G.S. In addition, the Customer will be subject to the following terms and conditions to provide benefits and cost savings to the Company's existing customers:

    a. Transitional Energy Pricing. Beginning on the Phase One In-Service Date and continuing through the date that the Company's planned combined cycle generating plant to be located at the existing Big Sandy site ("Big Sandy Combined Cycle Project") is placed in service, Kentucky Power shall establish a separate PJM subaccount for the flow-through with no mark-up to Customer of all PJM energy and energy-related costs associated with energy purchased by the Company to serve the Customer's Facility. Customer shall pay, as a separate line item on its monthly bill, the difference between the fuel basing point included in the Tariff I.G.S. transmission voltage base rate energy charge and the total of the monthly PJM energy charges incurred for Customer's hourly load, plus an additional $17,000 per month for administrative fees This amount, positive or negative, shall be a substitute for the Customer's Fuel Adjustment Clause ("FAC") charge for the month, regardless of any purchase power adjustment or limitation within the FAC. Customer will not be responsible during this period of time for the Company's other FAC charges that will be based on the cost to serve other customers, nor will the Customer's PJM energy charges be included in the FAC rate to serve other customers After the date the Big Sandy Combined Cycle Project is placed in service, the Customer will pay the Company monthly for electric energy delivered hereunder at the rates and under the provisions of the Company's Tariff I.G.S Until the Big Sandy Combined Cycle Project is placed in service, the intent of this section is to serve the Customer's energy needs through PJM energy market purchases with no effect on other customers.

    b. Return on Life to Date Costs for Big Sandy Combined Cycle Project. After the Commission Contract Approval Date and the date the Commission issues a Certificate of Public the Convenience and Necessity ("CPCN") for the Big Sandy Combined Cycle Project, in an order reasonably acceptable to both Parties (the "Commission CPCN Approval Date"), the Customer agrees to pay the Company a quarterly carrying charge on costs incurred by the Company for the construction of the Big Sandy Combined Cycle Project ("Life to Date osts") up to a maximum amount of $465,366,377. Any carrying charges incurred prior to the later of the Commission Contract Approval Date or the Commission CPCN Approval Date, and any carrying costs in excess of the maximum amount, will be included in the Big Sandy Combined Cycle Project costs as allowance for funds used during construction ("AFUDC"). The quarterly carrying charge cost will be calculated as the sum for all months in the quarter of the monthly carrying charge. The monthly carrying charge will be calculated as the product of each month in the quarter's

Life to Date Costs, and one twelfth of the Company's Pre-Tax Weighted Cost of Capital ("Pre-Tax WACC"). As formula,

Monthly Carrying Charge Each Month in the Quarter's Life to Date Costs x 1 12 x Pre-Tax WACC.

The Company will send the Customer an invoice by the 10th day of the month following the end of the quarter, and payment will be due from the Customer to the Company within twenty (20) days of the date the invoice is received. This carrying charge cannot exceed the maximum amount of $465,366,377 and will cease when the Company places the Big Sandy Combined Cycle Project into service.

c. Residential Bill Credits. The Customer agrees to fund ten (10) years of residential bill credits in the total amount of one hundred million dollars ($100,000,000) ("Residential Bill Credits"). Payment from the Customer to the Company is due on December 1 of each year in the amounts set forth in **Exhibit C**. The Company will apply the Residential Bill Credits to customer bills in January, February and March (for usage in December, January, and February). The credit will be listed separately on residential bills and indicate that the credit is being provided by the Customer.

11. The Company shall promptly seek approval from the Commission of this Contract as a special contract. Customer agrees to support the Company's request for approval including through the timely provision of information necessary to support the request for approval. The contents of the Company's request for approval of this Contract shall be the in sole discretion of the Company.

12. The Customer's contract capacity under the Tariff I.G.S. is fixed at the contract capacity specified in **Exhibit A**. Customer's billing demand shall be determined by this Contract and Tariff I G S. If a time-of-day demand is available under the Tariff I.G.S. and is selected by the Customer, the reservation of the Contract Capacity shall be the peak period reservation of capacity and shall determine the minimum monthly billing demand.

13. The Company estimates that the work necessary to attain the Load Ramp Contract Capacity set forth in **Exhibit A** will be completed within twenty five (25) months following the Effective Date. The Company estimates that delivery of the Maximum Contract Capacity (1000 MW) set forth in Exhibit A will be possible within thirty-seven (37) months following the Effective Date. The Company may extend the target completion date as necessitated by events beyond its reasonable control or by changes to scope, schedule, and cost of work, unless otherwise prohibited by law or the Tariff I.G.S., and shall notify the Customer in writing of any such extension that exceeds thirty (30) days.

14. Except as provided in this Contract, the Customer must provide collateral, consistent with the Tariff I.G.S., for the Customer's payment obligation by the dates set forth and in the form and amount identified as "Security" on **Exhibit B**. If Customer fails to provide the Security as required herein, the Company shall have the right to immediately terminate this Contract and the Company shall have no liability to the Customer arising from or related to such termination. Company may comingle any cash held as part of the Security with other funds under its custody or control and will have no obligation to invest the funds. The Company may, by written Notice to the Customer, require the Customer to increase, replenish, or replace such Security from time to time if (i) the Company determines in its reasonable discretion that any remaining Security is not adequate, (ii) the bank issuing any Letter of Credit no longer maintains the Required Credit Rating set forth on **Exhibit B**, or (iii) any Guarantor no longer maintains the Required Credit Rating set forth on **Exhibit B**, in each case consistent with the Tariff I.G.S. and this Contract. The Customer must provide any such increase, replenishment, or replacement to the Company within ten (10) business

days of such written Notice. Any such increased, replenished or replacement Security must meet the criteria of this Contract and the Tariff I.G.S. If the Customer requests the modification or replacement of an existing Security during the Contract Term, the Company will consider any such request in good faith and within ten (10) business days of the Customer's written Notice thereof; provided, that any such modified or replacement Security meets the criteria of this Contract and the Tariff I.G.S. The Company has the right to draw upon or otherwise make use of the Security to pay the Customer's payment obligations under this Contract or the Tariff I.G.S. (including the Customer's obligation to pay minimum monthly charges) upon the occurrence of any default or breach under this Contract (or any applicable letter(s) of agreement for network or customer-specific investment prior to energization) for failed or delayed payment, insufficient Security, or that impacts energization or commencement or continuation of the Initial Contract Term.

15. Consistent with the requirement in Tariff I.G.S. and this Contract, the Company will, on an annual basis, recompute the amount of Security required from Customer to protect the Company's other customers. For purposes of recomputing Security, the terms and conditions to provide benefits and cost savings to the Company's existing customers under Section 10 (a) (c) will be excluded from the Customer's previous maximum monthly non-fuel bill under the Tariff I.G.S. collateral calculation. For each annual recompute, the Customer's previous maximum monthly non-fuel bill shall be determined over the twelve (12) months preceding the recompute date. The Company shall first recompute the amount of Security required on the date that is the first anniversary of the Phase One In-Service Date. The Company shall then recompute the amount of Security required on each anniversary thereafter. If the recomputed amount of Security is at least 10% greater than the then current amount of Security, Customer shall, within thirty (30) days of the date notice of the recomputed amount is provided to Customer provide additional Security such that the total Security equals the full recomputed amount. If the recomputed amount of Security is at least 10% less than the then current amount of Security, Company shall, within thirty (30) days of the date notice of the recomputed amount is provided to Customer, release or return Security such that the total Security held by the Company equals the reduced amount. If the Customer reduces its contract capacity by 50 MW or more, including a Phase One or Phase Two capacity reduction or termination as provided for under Sections 5 or 6, then the Security will be promptly recomputed each year thereafter to reflect 24 months of expected monthly maximum non-fuel billing, and the Company shall release or return any Security in excess of the recomputed amount within thirty (30) days. In the event that Tariff I.G.S. is amended such that the requirement to recompute the amount of Security required to protect customers is removed, the Company will continue to recompute the amount of Security required and the Company and Customer shall continue to increase or decrease the amount of Security required as set forth in this section Company will release or return the Security associated with Phase One or Phase Two within sixty (60) days after the termination date of either Phase One or Phase Two, respectively, unless there are outstanding claims, in which case, the applicable Security will be released or returned promptly after such outstanding claims are resolved.

16. There are no unwritten understandings or agreements between the Parties relating to the service described in this Contract. This Contract, together with the LOA and the Tariff I.G.S., constitutes the entire understanding and commitment of the Parties and supersedes all previous agreements relating to the delivery of energy by the Company at the Customer's Premises described above. This Contract shall be in full force and effect when last signed by the authorized representatives of the Parties below (the "Effective Date") If any provision of this Contract is invalid or unenforceable under any applicable law or the Tariff I G S , such provision will be deemed reformed or deleted, but only to the extent necessary to comply with such law or the Tariff I.G.S., and the remaining provisions of this Contract will remain in full force and effect. No waiver will constitute or be construed as a waiver of any other provision, and no waiver of a failure to comply with any provision of this Contract will constitute or be construed as a continuing waiver of that provision or as a waiver of any other failure to comply with any provision of this Contract. No

failure or delay on the part of any Party in the exercise of any right or remedy under this Contract will impair that right or remedy or be construed to be a waiver of, or acquiescence in, any breach of any provision of this Contract, nor will any single or partial exercise of any right or remedy preclude other or further exercise of that right or remedy, or of any other right or remedy. This Contract is governed by the laws of the State of Kentucky, without regard to any conflicts of law provisions. Nothing in this Contract divests or limits the jurisdiction of the Commission This Contract shall inure to the benefit of and be binding upon the successors and permitted assigns of the Parties. This Contract shall not be assigned or amended by either Party without the written consent of the other Party, and any assignment by one Party to this Contract shall not relieve that Party of its financial obligations hereunder unless the other Party to this Contract so consents in writing. Such consent shall not be unreasonably withheld or delayed. Notwithstanding the foregoing, it is expressly understood and agreed that the Customer may assign this Contract to any commonly controlled affiliate, provided, such assignee assumes all Customer obligations and liabilities hereunder and provides the Security required under this Contract prior to the assignment becoming effective.

17. This Contract does not create any additional obligations of the Company or its affiliates to plan, generate, transmit, or distribute electric service, or to plan or reserve generation, transmission, or distribution capacity, that does not otherwise exist at law or under the Tariff I.G.S Electric service will not commence until the Company has sufficient capacity and infrastructure to meet Company's and Customer's load requirements, which could be delayed by the applicable regional transmission organization, governmental authorities including but not limited to the Commission, third party transmission owners, providers, and systems, and events outside the Company's reasonable control. The Company shall use commercially reasonable efforts, consistent with the Tariff I.G S., good utility practice, and applicable law, to complete the work necessary to enable electric service as set forth in **Exhibit A**. The Company does not guarantee achievement of any estimated service date or the capacity contemplated during the Load Ramp Period set forth in **Exhibit A** or Initial Contract Term by a specific date, and the Company's obligations with respect to these matters are described solely in the Tariff I.G.S., this Contract, the LOA, and applicable law. The Company is permitted to disconnect the Customer at any time as permitted under the Tariff I.G.S., including (without limitation) with respect to any detection of any activities outside the Company's technical requirements, usage that impermissibly exceeds contracted capacity, receipt of false information, or otherwise as permitted under the Tariff I.G.S. or applicable law. The Company will make reasonable efforts to notify the Customer in advance of the occurrence of any event that could give rise to a disconnection and will work with Customer in good faith to resolve any such issues following a disconnection to enable reconnection of Customer in a matter consistent with the Company's technical requirements, the Tariff I G.S., this Contract, applicable law, and good utility practice. Electric Service to Customer shall be on a non-discriminatory basis consistent with the firm service provided to all other non-interruptible customers.

18. If, due to any change in applicable law or interpretation thereof by any court of law, the Commission, or governmental authority subsequent to the Effective Date, the performance of any provision of this Contract or any transaction contemplated hereby shall become impracticable or impossible, the Parties shall use their best efforts to find and employ an alternative means to achieve the same or substantially the same result as that contemplated by such provision and, if necessary, the Parties shall renegotiate the terms of this Contract in good faith to address the change in applicable law or interpretation thereof.

19. Each Party shall deliver all notices, requests, consents, claims, demands, waivers, and other communications under this Contract (each, a "Notice") in writing and addressed to the other Party at its physical address or email address set forth on the signature page of this Contract (or to such other address that the receiving Party may designate from time to time in accordance with this Section). Each Party shall deliver all Notices by personal delivery, nationally recognized overnight

courier (with all fees prepaid), email, or certified or registered mail (return receipt requested, postage prepaid). Except as otherwise provided in this Contract, a Notice is effective only (i) upon receipt by the receiving Party, and (ii) if the Party giving the Notice has complied with the requirements of this Section.

[*Remainder of page intentionally left blank. Signatures follow on next page.*]

The Customer and Company have executed this Contract through their duly authorized representatives as of the respective dates set forth below. The Effective Date is as defined in the Contract.

Kentucky Power Company

By: Cynthia Wiseman

Cynthia Wiseman

Title: President | COO

Date: November 4, 2026

Address: Kentucky Power Company
c/o American Electric Power Service Corporation
1 Riverside Plaza
Columbus, OH 43209
Email: ajelliott@aep.com

With a copy to: legalnotices@aep.com

DB Long Hunts Data LLC

By: Nazar M. Khan

Nazar Khan

Title: Chief Operating Officer &
Chief Technology Officer

Date: November 4, 2026

Address: DB Long Hunts Data LLC
9 Federal Street
Easton, MD 21601
Email: legal@terawulf.com

Exhibit A

Load Ramp Period, Load Ramp Contract Capacity, and Maximum Contract Capacity

Customer's Load Ramp Periods, Load Ramp Contract Capacity, and Maximum Contract Capacity (monthly peak load requirements for each month during the Phase One and Phase Two Initial Contract Terms after the Load Ramp Period) are set forth in the following tables:

Phase One

Load Ramp Period: October 2028 Load Ramp Contract Capacity (Month 1)	100 MW
Load Ramp Period: November 2028 Load Ramp Contract Capacity (Month 2)	200 MW
Load Ramp Period: December 2028 Load Ramp Contract Capacity (Months 3-4)	250 MW
Load Ramp Period: February 2029 Load Ramp Contract Capacity (Month 5)	350 MW
Load Ramp Period: March 2029 Load Ramp Contract Capacity (Month 6)	450 MW
Phase One Maximum Contract Capacity: April 2029 through Phase One Initial Contract Term (Months 7-240)	500 MW

Phase Two

Load Ramp Period: July 2029 Load Ramp Contract Capacity (Month 1)	150 MW
Load Ramp Period: August 2029 Load Ramp Contract Capacity (Month 2)	300 MW
Load Ramp Period: September 2029 Load Ramp Contract Capacity (Month 3)	450 MW
Phase Two Maximum Contract Capacity: October 2029 through Phase Two Initial Contract Term(Months 4-180)	500 MW

Exhibit B

Security

Customer will provide Security by the dates and in the amounts set forth in the following schedule:

Line No.	Due Date	Amount
1.	Provided at execution of Original Contract	$310,747,147.00
2.	Within sixty (60) days after the Commission Contract Approval Date	$125,105,402.00
	TOTAL	$435,852,549.00

Customer must provide the Security in one or more of the following forms:

A. One or more irrevocable, standby letters of credit with a minimum term of 360 days, substantially in the form and containing the provisions of the specimen attached as Attachment A, or with such other provisions from the issuing bank as agreed to and approved by the Company in its sole discretion (the "Letter of Credit"), issued from a U.S. commercial bank or the U.S. branch of a foreign bank that has and maintains a credit rating of at least A- from Standard and Poor's and an A3 credit rating from Moody's Investors Services (the "Required Credit Rating"). The Customer must cause the renewal or extension of the Letter of Credit for additional consecutive terms of 360 days or more no later than 30 days prior to each expiration date through the date the Customer has fully paid its obligations under the Contract. If the Letter of Credit is not renewed or extended as required herein, the Company will have the right to draw immediately upon the Letter of Credit and be entitled to hold the amounts so drawn as Security.

B. An irrevocable guaranty, substantially in the form and containing the provisions of the specimen attached as Attachment B, or with such other provisions as agreed to and approved by Company in its sole discretion (the "Guaranty"), from a guarantor that is the ultimate parent or a corporate affiliate of Customer, so long as the guarantor has and maintains the Required Credit Rating (the "Guarantor"). If the Customer desires to provide Security in the form of a Guaranty, the Customer shall provide financial information of the Guarantor requested by the Company from time to time, including annual audited financial statements for so long as the Guaranty is in effect.

Attachment A

FORM OF IRREVOCABLE STANDBY LETTER OF CREDIT

DATE OF ISSUANCE: _____

[Beneficiary: Company Name and Address]

RE: Credit No. _____

We hereby establish this Irrevocable Standby Letter of Credit (this "Letter of Credit") in your favor for the account of _____ (the "Account Party"), for the maximum aggregate amount not exceeding _____ United States Dollars ($_____) (the "Stated Amount"), available to you ("Beneficiary") for payment at sight upon demand by presentation made at our counters at (Location), or by internationally recognized courier, on or before the expiration hereof or any automatically extended expiration date, against presentation to us of a Demand for Payment, dated and signed by a representative of the Beneficiary (the "Demand for Payment"), substantially in the form attached hereto as Annex A.

No other document or statement shall be required, and the Issuing Bank shall not inquire into the underlying transaction or the accuracy of any information set forth in the Demand for Payment.

Partial and multiple drawings are permitted hereunder, and each drawing shall reduce the available balance of this Letter of Credit on a dollar-for-dollar basis.

We hereby agree with you that documents drawn under and in compliance with the terms of this Letter of Credit shall be final and conclusive and shall be duly honored upon presentation as specified.

This Letter of Credit shall be governed by the International Standby Practices, International Chamber of Commerce Publication No. 590 ("ISP98"), and additionally by the laws of the State of New York, without regard to conflicts of law principles, except to the extent that the terms hereof are inconsistent with the provisions of ISP98, in which case the terms of this Letter of Credit shall govern. The Issuing Bank shall have a reasonable amount of time, not to exceed three (3) banking days, following the date of its receipt of documents from the Beneficiary, to determine if a presentation is complying and to inform the Beneficiary thereof accordingly; failure to provide such notice within such time shall constitute acceptance of the presentation.

In the event of an Act of God, riot, civil commotion, insurrection, war or any other cause beyond our control that interrupts our business (collectively, an "Interruption Event") and causes the place for presentation of this Letter of Credit to be closed for business or otherwise unable to receive presentations on the last day for presentation, the expiry date of this Letter of Credit will be automatically extended without amendment to a date thirty (30) Calendar Days after the place for presentation is fully reopened and capable of honoring drawings.

It is a condition of this Letter of Credit that it will be automatically extended without amendment for one (1) year from the expiration date hereof, or any future expiration date, unless at least ninety (90) days prior to any expiration date we notify you by internationally recognized courier, with confirmation of receipt, that we elect not to consider this Letter of Credit renewed for any such period. Upon receipt of any such non-renewal notice, the Beneficiary shall have the right to draw up to the full Stated Amount prior to the then-current expiration date.

All commissions, expenses and charges incurred with this Letter of Credit, including issuance, drawing, negotiation, and reimbursement fees, are for the account of the Account Party, and no such fees shall be deducted from any drawing made by the Beneficiary.

The Beneficiary may assign the proceeds of this Letter of Credit without the consent of the Issuing Bank or the Account Party.

EXPIRY DATE: [_____, 202_]

[BANK SIGNATURE]

Annex A

DEMAND FOR PAYMENT

Date: _____

To: [Issuing Bank Name]

Re: Irrevocable Standby Letter of Credit No. _____ (the "Letter of Credit")

The undersigned, a duly authorized representative of the Beneficiary, hereby certifies that:

1. The Account Party has failed to pay amounts due and payable to the Beneficiary or its assigns; and

2. The amount demanded hereby does not exceed the available balance under the Letter of Credit.

Accordingly, the Beneficiary hereby demands payment in the amount of:

USD $_____

Payment instructions:
[Wire / payment details to be provided separately or upon request]

Beneficiary: _____
By: _____
Name: _____
Title: _____

Attachment B

FORM OF CORPORATE GUARANTY

GUARANTY

TO: [AEP Company Name] and its successors and assigns (collectively "Beneficiary")

FOR GOOD AND VALUABLE CONSIDERATION, the receipt and sufficiency of which are hereby acknowledged, and to induce Beneficiary to enter into a *[name of contract]* dated as of _____, as the same may be amended from time to time (the "Agreement"), with *[Customer name]*, a(n) _____ *[entity type and jurisdiction]* ("Debtor"), the undersigned _____ *[guarantor name]*, a(n) _____ *[entity type and jurisdiction]* ("Guarantor"), hereby irrevocably and unconditionally guarantees the due punctual and full payment of any and all obligations of the Debtor to the Beneficiary now or hereafter due pursuant to the Agreement or pursuant to Applicable Law (as defined in the Agreement) in connection with the activities of the parties under the Agreement (the "Guaranteed Obligations"). Upon any failure by the Debtor to pay any of the Guaranteed Obligations, the Guarantor agrees that it will forthwith on demand pay any amounts which the Debtor has failed to pay the Beneficiary, at the place and in the manner specified in the Agreement. This Guaranty is a guaranty of payment and not merely a guaranty of collection. The Guarantor agrees that the Beneficiary may resort to the Guarantor for payment of any of the Guaranteed Obligations, whether or not the Beneficiary shall have resorted to any collateral security, or shall have proceeded against any other obligor principally or secondarily obligated with respect to any of the Guaranteed Obligations. Guarantor reserves the right to assert defenses which the Debtor may have to payment of any Guaranteed Obligations other than defenses based on lack of capacity, lack of authorization, lack of due execution, illegality, or limitations of actions, or arising from the bankruptcy, insolvency, or similar proceeding of the Debtor and other defenses expressly waived hereby.

The Guarantor agrees that, in the event of the dissolution or bankruptcy of the Debtor, if such event shall occur at a time when any of the Guaranteed Obligations may not then be due and payable, the Guarantor will pay the Beneficiary forthwith the full amount which would be payable hereunder by the Guarantor if all such Guaranteed Obligations were then due and payable and in default.

The obligations of the Guarantor hereunder shall be unconditional and absolute and, without limiting the generality of the foregoing, shall not be released, discharged or otherwise affected by:

(A) any extension, renewal, settlement, compromise, waiver, discharge, or release in respect of any Guaranteed Obligations of the Debtor;

(B) the existence, or extent of, any release, exchange, surrender, non-perfection, or invalidity of any direct or indirect security for any of the Guaranteed Obligations;

(C) any modification, amendment, waiver, extension of or supplement to the Agreement or any of the Guaranteed Obligations agreed to from time to time by the Debtor and the Beneficiary;

(D) any change in the corporate existence (including its constitution, laws, rules, regulations or powers), structure or ownership of the Debtor or the Guarantor, or any insolvency, bankruptcy, reorganization or other similar proceeding affecting the Debtor or its assets, the Guarantor or any other guarantor of any of the Guaranteed Obligations;

(E) the existence of any claim, set-off, or other rights which the Guarantor may have at any time against the Debtor, the Beneficiary, or any other corporation or person, whether in connection herewith or in connection with any related or unrelated transaction; provided that nothing herein shall prevent the assertion of any such claim by separate suit or compulsory counterclaim if such claim, set off, or other right arose in connection with the Guaranteed Obligations.

(F) except as to applicable statutes of limitation, failure, omission, delay, waiver or refusal by Beneficiary to exercise, in whole or in part, any right or remedy held by Beneficiary with respect to the Agreement or any transaction under the Agreement; or

(G) any other circumstance that might otherwise constitute a defense available to, or a discharge of, any Debtor or any other individual, partnership, joint venture, corporation, association, trust or other enterprise that is a party to the Agreement, or any other agreement or instrument (including any guarantor) in respect of the Guaranteed Obligations, other than payment in full of the Guaranteed Obligations.

This Guaranty shall remain in full force and effect until the date on which the Debtor is entitled by the Agreement to a release of its Security provided thereunder. Such termination shall not release Guarantor from liability for any Guaranteed Obligations arising prior to the effective date of such termination (even if the amount of such Guaranteed Obligations is not then fully determined). If at any time any payment of any of the Guaranteed Obligations is rescinded or must be otherwise restored or returned upon the insolvency, bankruptcy, or reorganization of the Debtor, the Guarantor's obligations hereunder with respect to such payment shall be reinstated at such time as though such payment had not been made. If Debtor's assets or a major portion thereof are transferred to any other party or parties otherwise than by operation of law, and if Beneficiary enters into any transaction whereby such transferee or transferees become indebted to Beneficiary, this Guaranty, subject to all the other terms hereof, shall apply to any Guaranteed Obligations or balance of Guaranteed Obligations of such other transferee or transferees to Beneficiary.

The Guarantor irrevocably waives acceptance hereof, diligence, presentment, demand, protest, notice of dishonor, notice of any sale of collateral and any notice not provided for herein, and any requirement that at any time any person exhaust any right to take any action against the Debtor or its assets or any other guarantor or person. Guarantor further waives notice of the transactions between Beneficiary and Debtor, notice of the execution and delivery, amendment, extension, or renewal of any present or future instrument pertaining to the Guaranteed Obligations, notice of default by Debtor, and any other notice not expressly required by this Guaranty. Guarantor further consents, without further notice, to any extension

or extensions of the time or times of payment of said Guaranteed Obligations, or any portion thereof, and to any change in form or amount, or renewal at any time, of such Guaranteed Obligations, or any portion thereof, in each case up to an aggregate amount set forth below. Should any present or future Guaranteed Obligations incurred by Debtor not be paid when due or at the time to which the same may be extended, Beneficiary may proceed against Guarantor for such Obligations at any time, without notice and without any proceeding or action against Debtor.

Guarantor shall not exercise any rights which it may have or acquire by way of subrogation until all of the Guaranteed Obligations are paid in full to Beneficiary. Guarantor shall not enforce any right or receive any payment by way of subrogation until all of the Guaranteed Obligations then due shall have been paid in full and Beneficiary agrees to take at Guarantor's expense such steps as the Guarantor may reasonably request to implement such subrogation. If any amounts are paid to Guarantor in violation of the foregoing limitations, then such amounts shall be held in trust for the benefit of Beneficiary and shall forthwith be paid to Beneficiary by Guarantor to reduce the amount of outstanding Obligations, whether matured or unmatured.

In the event that acceleration of the time for payment of any amount payable by the Debtor under the Agreement is stayed upon the insolvency, bankruptcy or reorganization of the Debtor, all such amounts otherwise subject to acceleration or required to be paid upon an early termination pursuant to the terms of the Agreement shall nonetheless be payable by the Guarantor hereunder forthwith on demand by the Beneficiary.

The Guaranty shall be binding upon and inure to the benefit of the Beneficiary and its successors and assigns. Beneficiary may assign this Guaranty in its sole discretion. Guarantor may not assign its rights and obligations hereunder, whether by operation of law or otherwise, without the prior written consent of the Beneficiary which consent may be arbitrarily withheld, and any such purported assignment without such written consent will be void.

Except for increases in the aggregate amount of Guaranteed Obligations, no other provision of this Guaranty may be amended, supplemented, or modified, nor any of the terms and conditions hereof waived, except by a written instrument executed by the Guarantor and an authorized representative of the Beneficiary.

The rights, powers, remedies, and privileges provided in this Guaranty are cumulative and not exclusive of any rights, powers, remedies, and privileges provided by law and any other agreement.

Notwithstanding anything in this Guaranty to the contrary, Guarantor's liability under this Guaranty and the Beneficiary's right of recovery under the same shall be limited to an aggregate amount of _____ Dollars ($_____). In the event Beneficiary engages in litigation to enforce this Guaranty, Guarantor agrees to pay, in addition to any amounts of Debtor which Guarantor has otherwise guaranteed to pay hereunder, any and all costs and expenses incurred by Beneficiary (including reasonable attorney's fees) in enforcing this Guaranty provided Beneficiary is successful in such litigation.

Guarantor represents and warrants that:

(A) The Guarantor is duly organized, validly existing and in good standing under the laws of the jurisdiction of its incorporation and has full corporate power to execute, deliver and perform this Guaranty.

(B) The execution, delivery, and performance of the Guaranty have been and remain duly authorized by all necessary corporate action and do not contravene any provision of law or of the Guarantor's constitutional documents or any contractual restriction binding on the Guarantor or its assets.

(C) All consents, authorizations and approvals of, and registrations and declarations with, any governmental authority necessary for the due execution, delivery and performance of this Guaranty have been obtained and remain in full force and effect and all conditions thereof have been duly complied with, and no other action by and no notice to or filing with, any governmental authority is required in connection with the execution, delivery, or performance of this Guaranty.

(D) This Guaranty constitutes the legal, valid and binding obligation of the Guarantor enforceable against the Guarantor in accordance with its terms, subject, as to enforcement, to bankruptcy, insolvency, reorganization and other laws of general applicability relating to or affecting creditors' rights and to general equity principles.

All notices or communications to the other party may be sent via email and shall be followed in writing by registered or certified mail, or overnight delivery service to:

To Guarantor:

_____

Attn: _____

_____

_____

Email:

To Beneficiary:

[AEP Company]

c/o American Electric Power Service Corporation

Attn: Credit Risk Management

1 Riverside Plaza, 27th Floor

Columbus, OH 43215

Email: Columbus_Credit@aep.com

or such other address as each party shall from time to time specify.

If any provision of this Guaranty is found by a court of competent jurisdiction to be void, illegal or otherwise unenforceable in that jurisdiction, such provision, to the extent of its invalidity, shall be severed from this Guaranty and be ineffective in that jurisdiction; provided, however, that such finding shall not affect the validity, legality or enforceability of such provision in any other jurisdiction or the validity, legality or enforceability of any other provision of this Guaranty. THIS GUARANTY WILL BE GOVERNED BY AND CONSTRUED IN ACCORDANCE WITH THE LAWS OF THE STATE OF OHIO, WITHOUT REFERENCE TO CHOICE OF LAW DOCTRINE. Guarantor waives any right to trial by jury with respect to this Guaranty.

IN WITNESS WHEREOF, the Guarantor has caused this Guaranty to be duly executed as of the date set forth below.

(_____)

By: _____

Name:

Title:

Date:

Exhibit C

Residential Bill Credits

YEAR	Payment Date	Amount
1	December 1, 2028	$10,000,000.00
2	December 1, 2029	$10,000,000.00
3	December 1, 2030	$10,000,000.00
4	December 1, 2031	$10,000,000.00
5	December 1, 2032	$10,000,000.00
6	December 1, 2033	$10,000,000.00
7	December 1, 2034	$10,000,000.00
8	December 1, 2035	$10,000,000.00
9	December 1, 2036	$10,000,000.00
10	December 1, 2037	$10,000,000.00
	TOTAL	$100,000,000.00

EXHIBIT AJE-2

TeraWulf Letter Of Agreement

KENTUCKY POWER

An AEP Company

DB Long Hunts Data LLC
9 Federal Street
Easton, MD 21601

September 30, 2026

Dear Customer:

This Amended and Restated Letter of Agreement ("Agreement") is between DB Long Hunts Data LLC, a Delaware limited liability company ("Customer") and Kentucky Power Company ("Company") and is subject to Company's approved tariff(s) for electric service on file with the Kentucky Public Utilities Commission (the "Commission") (including Tariff Industrial General Service, the "Tariff I.G.S."). The "Effective Date" is the date this Agreement is signed by both parties. As of the Effective Date, this Agreement supersedes in its entirety the Letter of Agreement between the Company and DB Long Hunts Finance LLC, dated May 22, 2026 and subsequently assigned to the Customer ("Original Letter of Agreement"), and the Original Letter of Agreement has no further force or effect.

1. **Exhibit A; Scope of Work; Cost(s)**. Exhibit A describes and defines: (a) an estimate of the preliminary scope of Work to be completed according to the terms of this Agreement; (b) the estimated Cost of performing the Work; (c) Customer's applicable Facility related to the Work; (d) the nature of Customer's desired Electric Service for the Facility; and (e) the financial obligations of Customer (including CIAC Payment(s), Customer's Cost Limit, Security, and the method by which the Company will recover the Cost of the Work if Customer performs all its obligations under the Agreement). The actual scope, schedule, and Cost of the Work, and Customer's related financial obligations may change from that described on Exhibit A. Examples of factors that could cause such changes include: supply chain disruptions, regulatory processes, grid analyses, stability analyses, ISO/RTO analyses, local and/or system upgrades, and permit, siting, land right acquisition, and interconnection requirements. Company has no obligation under this Agreement to perform additional work to serve any expansion of the Facility or other development not contemplated by this Agreement. Company has no obligation to begin any Work dependent on a third-party study or regulatory consent or approval until the required study, consent, or approval is complete or otherwise satisfied.

Company may by Notice increase the Cost Limit (related to any change of the estimates and assumptions described on Exhibit A) by the lesser of 20% or $10 million, above which any increase requires the written approval of Customer with such approval not to be unreasonably withheld, conditioned, or delayed. Company shall provide reasonable documentation supporting any increase in the Cost Limit upon request by Customer. At Customer's request, no more frequently than quarterly, Company will provide Customer with an update of Costs incurred. "Cost(s)" means all costs and expenses whether internal or external related to the Work or any delay or cancelation, including for labor, materials, equipment, services, overtime, AFUDC, financing, overhead, taxes (including any tax "gross-up" or income tax component contribution of any CIAC Payment(s)), Customer allowances in lieu of CIAC Payment(s), noncancelable commitments, re-stocking, removal, demobilization, remobilization, suspension, termination, and cancelation.

2. **Target Completion Date**. Company estimates that the Work necessary to attain the Load Ramp set forth in Exhibit C will be completed within twenty-five (25) months following the Effective Date (the "Target Completion Date"). The Company estimates that delivery of the Full Anticipated Operational Capacity set forth in Exhibit A (1000 MW) will be possible within thirty-seven (37) months following the Effective Date. Company may extend the Target Completion Date as necessitated by events beyond its reasonable control or by changes to scope, schedule, and Cost of the Work, unless otherwise prohibited by law or the Tariff I.G.S., and shall notify Customer in writing of any such extension that exceeds thirty (30) days. Company shall promptly notify Customer in writing when each stage of the Load Ramp set forth in Exhibit C (100 MW, 200 MW, 250 MW, 350 MW, 450 MW, 500 MW, 650 MW, 800 MW, 950 MW, and 1000 MW) is complete.

3. **Company's Remedies**. Company may, at its option and by Notice, terminate this Agreement, delay the Target Completion Date, stop or delay any aspect of the Work, modify Customer's Load Ramp Schedule, require additional CIAC Payments consistent with the terms and conditions of the Tariff I.G.S., collect from Customer all or any portion of Costs incurred and not to exceed the Cost Limit described on Exhibit A, or pursue any other remedy available at law or under the Tariff I.G.S., if any of the following occur (each a "Cost Recovery Event"):

   a. Customer terminates this Agreement or delays or cancels the Facility for any reason;

   b. Customer materially breaches any provision of this Agreement, including any failure to pay any amount when due;

   c. Customer unreasonably withholds, conditions, or delays its written approval under Section 1 of any change in the Cost Limit;

   d. Customer does not execute an amendment to this Agreement necessary to perform the Work;

   e. Company reasonably determines (including based on Customer's statements, actions or inaction, public announcements, activity at the Facility, or any request to delay the Work or failure to recommence the Work following any agreed-upon delay) that Customer cannot receive the Electric Service at the Facility on the schedule, or at the

transmission capacity, contemplated by this Agreement for any reason (including due to delay or cancelation of construction of the Facility); or

f. Customer becomes insolvent, files, or has filed against it, a petition for voluntary or involuntary bankruptcy or pursuant to any other insolvency law, makes or seeks to make a general assignment for the benefit of its creditors, or applies for, or consents to, the appointment of a trustee, receiver, or custodian for a substantial part of its property or business.

The Company will use commercially reasonable efforts to mitigate Costs to be collected from Customer prior to invoicing for such Costs.

4. **CIAC Payment(s)**. Customer must pay Company the CIAC Payment(s) described on Exhibit A within 30 days of receipt of invoice. Company has no obligation to begin or continue the Work if any CIAC Payment is unpaid. The CIAC Payment(s) are based on the estimated Cost to complete the Work. Additional CIAC Payment(s) may be required, or excess CIAC Payment(s) refunded, based upon the actual Cost to complete the Work.

5. **Security**. Customer must provide security for Customer's payment obligation with respect to Costs in the form and amounts set forth as the "Security" on Exhibit B. Company may make use of Customer's CIAC Payments and Security to pay Customer's obligation for Costs, and invoice Customer for any deficiency (which Customer shall pay within thirty (30) days). Company shall return the Security to Customer within thirty (30) days after Customer has fully paid and performed its obligations under the Agreement; upon the Company's return of the Security to Customer, the Agreement shall automatically terminate. The amount of the Security is not an estimate of Costs that may be invoiced by Company and is not a fixed price for, or cap on, such Costs. Company may comingle any cash held as part of the Security with other funds under its custody or control and will have no obligation to invest the funds. Company may by written notice to Customer require Customer to increase, replenish, or replace the Security from time to time if Company determines in its reasonable discretion and in good faith that any remaining Security is not adequate to cover the Costs that Company then reasonably estimates could become payable pursuant to this Agreement, or the credit rating of the bank issuing any letter of credit or the creditworthiness of the guarantor is no longer reasonably acceptable to Company, in each case consistent with the Tariff I.G.S. and this Agreement. Customer must provide any such increase, replenishment, or replacement to Company within ten (10) business days of such written notice. Any such increased, replenished or replacement Security must meet the criteria of this Agreement and the Tariff I.G.S.. If Customer requests the modification or replacement of an existing Security, the Company will consider any such request in good faith and within ten (10) business days of the Customer's written notice thereof; provided, that any such modified or replacement Security meets the criteria of this Contract and the Tariff I.G.S..

6. **Land Rights**. Consistent with 807 KAR 5:006, Section 6, (A) Customer shall, at no cost to the Company and on terms reasonably acceptable to Company, provide Company with good and marketable fee simple title, free and clear of all liens, encumbrances, or other title defects, to any parcel of land that Customer owns and that Company, in its reasonable

discretion, determines is necessary or desirable for the construction, ownership, and ongoing operation and maintenance of a new substation or other facilities necessary for the Company to provide Electric Service to the Facility, and (B) Customer shall, at no cost to the Company and on terms reasonably acceptable to Company, provide Company with other land rights, located on property owned by Customer, that Company, in its reasonable discretion, determines are necessary or desirable to complete the Work including, but not limited to, easements and rights-of-way for access, utilities, and related facilities; and (C) Company will acquire other land rights that Company, in its reasonable discretion, determines are necessary for completion of the Work (and the ongoing ownership, operation and maintenance of a new substation and other facilities necessary for the Company to provide Electric Service to the Facility) including, but not limited to, easements, fee ownership, and rights-of-way for access, utilities, and related facilities (the "Land Rights"). In accordance with 807 KAR 5:006, Section 6 (3)(c), the cost of obtaining Land Rights shall be included in the total per foot cost of the Project and shall be apportioned among the utility and the customer in accordance with 807 KAR 5:041, to the extent it is applicable. Company may delay the Work or, following reasonable, good faith consultation with Customer, terminate this Agreement if the Land Rights cannot be acquired on terms reasonably acceptable to Company, provided the Company has used commercially reasonable efforts to obtain such rights.

7. **Additional Customer Obligations**. Customer must perform, at no cost to Company, the additional Customer work described on Exhibit A when reasonably requested by Company. Customer must perform its work in accordance with Company's connection requirements and all applicable laws, rules, and regulations, and subject to required regulatory consents and approvals. Other parties may have lines and/or equipment that utilize Company's poles or other facilities, and Company is not responsible for any installation, relocation, or removal of lines and/or equipment owned by such third parties. Each such third party is responsible for its own equipment and schedule considerations to install, remove, or relocate such equipment. Any fees charged, or costs incurred, by other parties are the responsibility of Customer. Customer is responsible for contacting such third parties, as identified by Company, and arranging for any work that must reasonably be completed to facilitate this Agreement.

8. **Cooperation**. Customer must meet with Company as reasonably requested and provide Company with any requested information that is reasonably necessary to schedule and perform the Work. At Customer's request, Company must provide Customer with status updates regarding the Company's performance of the Work. Company must promptly notify Customer in writing of any known or anticipated circumstances that could reasonably be expected to delay the Target Completion Date.

9. **Ownership/Use of Work**. All facilities installed by Company in performing the Work will be owned, maintained, and controlled solely by Company or its affiliate. Customer will have no ownership or control of such facilities by virtue of the payment of any CIAC Payment or other reimbursement of Costs. Company and its affiliates expressly retain the right to use such facilities for any appropriate purposes under good utility practices, including electric service to other customers.

10. **Performance Standards/Disclaimer of Warranties**. The Work will be performed using good accepted engineering practices and in accordance with applicable laws, rules, and regulations, including RTO/ISO requirements and the Commission's rules and orders, and subject to required regulatory consents and approvals. Except for the foregoing, **COMPANY DISCLAIMS ON BEHALF OF ITSELF AND ITS AFFILIATES ALL EXPRESS OR IMPLIED WARRANTIES, INCLUDING WARRANTIES OF MERCHANTABILITY, FITNESS FOR A PARTICULAR PURPOSE, OR GOOD AND WORKMANLIKE PERFORMANCE.** This Agreement does not create any additional obligations of Company or its affiliates to plan, generate, transmit, or distribute electric service, or to plan or reserve generation, transmission, or distribution capacity, that does not otherwise exist at law or under the Tariff I.G.S..

11. **Limitation of Liability**. **COMPANY, ITS AFFILIATES, AND ITS AND THEIR OFFICERS, DIRECTORS, MANAGERS, EMPLOYEES, AND CONTRACTORS WILL NOT BE LIABLE FOR ANY LOSS RELATED TO: INSUFFICIENT TRANSMISSION CAPACITY, CURTAILMENT OF ELECTRIC SERVICE, INSUFFICIENT GENERATION SERVICE, ANY DELAY CAUSED BY THIRD PARTIES, OR ANY SPECIAL, INDIRECT, INCIDENTAL, CONSEQUENTIAL, PUNITIVE, OR EXEMPLARY DAMAGES (INCLUDING ECONOMIC OR COMMERCIAL LOSSES, LOSS OF PROFIT OR REVENUE, LOSS OF USE OF EQUIPMENT, COST OF CAPITAL, OR DAMAGE TO REPUTATION OR RELATIONS) RELATED TO THIS AGREEMENT OR THE PERFORMANCE OR FAILURE TO PERFORM THE WORK DESCRIBED HEREIN, WHETHER BASED IN CONTRACT, TORT, STRICT LIABILITY, STATUTORY LIABILITY, OR ANY OTHER THEORY OF LIABILITY.**

CUSTOMER, ITS AFFILIATES AND ITS AND THEIR OFFICERS, DIRECTORS, MANAGERS, EMPLOYEES, AND CONTRACTORS WILL NOT BE LIABLE FOR ANY SPECIAL, INDIRECT, INCIDENTAL, CONSEQUENTIAL, PUNITIVE, OR EXEMPLARY DAMAGES (INCLUDING ECONOMIC OR COMMERCIAL LOSSES, LOSS OF PROFIT OR REVENUE, LOSS OF USE OF EQUIPMENT, COST OF CAPITAL, OR DAMAGE TO REPUTATION OR RELATIONS) RELATED TO THIS AGREEMENT, WHETHER BASED IN CONTRACT, TORT, STRICT LIABILITY, STATUTORY LIABILITY, OR ANY OTHER THEORY OF LIABILITY.

12. **Nature of Work**. In performing the Work, Company is making modifications and additions solely to its own electric system, in accordance with the Tariff I.G.S., in response to Customer's request for Electric Service. Company is not performing any work on any facilities or equipment owned, or to be owned, by Customer. This Agreement does not address or in any way limit the generation supply options that may be used to provide Electric Service to Customer. No provision contained in this Agreement and no action on the part of any of the parties hereto may be construed as creating an employer/employee relationship, joint venture, or any other relationship other than that of regulated electric utility and customer. Nothing contained herein may be construed as a waiver or

relinquishment by Company of any right it has or may hereafter have to discontinue Electric Service for default in the payment of any invoice owing or to become owing hereunder or for any reason or cause allowed by law or the Tariff I.G.S.

13. **Load Ramp**. Company and Customer agree upon the Load Ramp Schedule to achieve the Facility's anticipated Full Operating Capacity described on Exhibit C (the "Load Ramp Schedule"). The Load Ramp Schedule outlined in Exhibit C of this Agreement relates solely to the transmission infrastructure necessary to provide Electric Service to Customer. If requested in writing by Company, Customer agrees to provide periodic updates to the Load Ramp Schedule. Company and Customer acknowledge that any change to the scope, schedule, or Cost of Work, this Agreement, or other changes outside the reasonable control of either party may impact the Load Ramp Schedule, including anticipated Full Operating Capacity, and Company has no obligation under this Agreement to achieve the Load Ramp Schedule or Full Operating Capacity or reserve or plan related generation, transmission, or distribution capacity.

14. **Amendments/Modifications**. No amendment or modification of this Agreement will be valid and binding unless made in writing and signed by the respective authorized representatives of Company and Customer.

15. **Notice**. Each party shall deliver all notices, requests, consents, claims, demands, waivers, and other communications under this Agreement (each, a "Notice") in writing and addressed to the other party at its physical address or email address set forth on the signature page of this Agreement (or to such other address that the receiving party may designate from time to time in accordance with this section). Each party shall deliver all Notices by personal delivery, nationally recognized overnight courier (with all fees prepaid), email, or certified or registered mail (return receipt requested, postage prepaid). Except as otherwise provided in this Agreement, a Notice is effective only: (a) upon receipt by the receiving party, and (b) if the party giving the Notice has complied with the requirements of this section.

16. **Miscellaneous**. This Agreement, together with all applicable provisions of the Tariff I.G.S., the Electric Service Agreement between the parties, dated May 22, 2026, and the Amended and Restated Electric Service Agreement between the parties, dated of even date herewith, constitutes the entire understanding and commitment of the parties and supersedes all prior offers, negotiations, and agreements relative to the subject matter hereof. Neither party shall assign or amend this Agreement without the prior written consent of the other party, it being expressly understood and agreed that Customer may assign this Agreement to any commonly controlled affiliate, provided, that such assignee assumes all Customer obligations and liabilities hereunder and provides the Security required under this Agreement prior to the assignment becoming effective. Any assignment in violation of this section is null and void. If any provision of this Agreement is invalid or unenforceable under any applicable law or the Tariff I.G.S., such provision will be deemed reformed or deleted, but only to the extent necessary to comply with such applicable law or the Tariff I.G.S., and the remaining provisions of this Agreement will remain in full force and effect. No waiver will constitute or be construed as a waiver of any other

provision, and no waiver of a failure to comply with any provision of this Agreement will constitute or be construed as a continuing waiver of that provision or as a waiver of any other failure to comply with any provision of this Agreement. No failure or delay on the part of any party in the exercise of any right or remedy under this Agreement will impair that right or remedy or be construed to be a waiver of, or acquiescence in, any breach of any provision of this Agreement, nor will any single or partial exercise of any right or remedy preclude other or further exercise of that right or remedy, or of any other right or remedy. This Agreement is governed by the laws of the state of where the Facility is located, without regard to any conflicts of laws provisions.

[Signature Page Follows]

The Customer and Company have executed this Agreement through their duly authorized representatives as of the respective dates set forth below. The Effective Date is as defined in the Agreement.

KENTUCKY POWER COMPANY

By: _____

Name: Cynthia Wiseman

Title: President & COO

Date: 10/1/2026

Address for Notice:
Kentucky Power Company
c/o American Electric Power Service Corporation
1 Riverside Plaza
Columbus, OH 43209
ajelliott@aep.com

With a copy to: legalnotices@aep.com

DB LONG HUNTS DATA LLC

By: _____

Name: Nazar Khan

Title: Chief Technology Officer

Date: September 30, 2026

Address for Notice:
9 Federal Street
Easton, MD 21601
legal@terawulf.com

With a copy to: mkurtz@BKLlawfirm.com

EXHIBIT A

Facility: Project Panda Data Center campus at EastPark, Ashland, KY

Facility's Anticipated Full Operating Capacity: 1000 MW

Electric Service: 345 kV transmission service, stepped down from 765 kV network. Metered at 345 kV. Requested in-service date the fourth quarter of 2028 for initial load ramp shown in Exhibit C.

Work (including attached one-line diagram):

Scope*	**Estimated Cost**
Station	
Engineering and Project Management	$6,711,660
Material	$193,394,793
Construction	$69,060,464
AFUDC	$15,643,737
T-Line	
Cut in/out 0.01mile SC existing Baker-Hanging Rock 765kV Line (assume 2 Lattice Tower DE Strs)	
Material	$950,000
Engineering	$350,000
Labor	$2,550,000
Build new two 3.5 mile SC customer station 345kV line	
Material	$7,875,000
Engineering	$3,150,000
Labor	$20,475,000
Total	$320,160,654

*The scope of Work does not include additional local upgrades or system upgrades that may be identified by more detailed grid analyses and modeling. Such local or system upgrades may include upgrades to facilities owned by, and require coordination with, third-party transmission owners, providers, and systems, and may be subject to review, modification, and approval by the applicable ISO/RTO and the Commission. Such local or system upgrades may cause delays to the Target Completion Date or changes to the anticipated transmission capacity necessary to provide Electric Service.

Company has determined the scope of Work and estimated Cost based on the following assumptions, which if incorrect may require adjustments to Customer's obligations:

Construct approximately 3.5 miles for two 345kV lines on separate monopole structures to serve new Customer station. Customer to help provide station site and ROW as needed to route line to final location.
All CPCN filings required for the Work must be completed before construction begins.
Design as set forth in the one-line diagram below.

CIAC Payment: $0

Cost Limit: $320,160,654

Recovery of Costs: Provided the Customer performs all its obligations under the Agreement, the Company will recover the Costs of the Work (estimated at $320,160,654) through applicable state and federal tariffs.

Customer Work:

Provide necessary Land Rights on Customer-owned property and site access for completion of the Work.

Project System Electrical Diagram

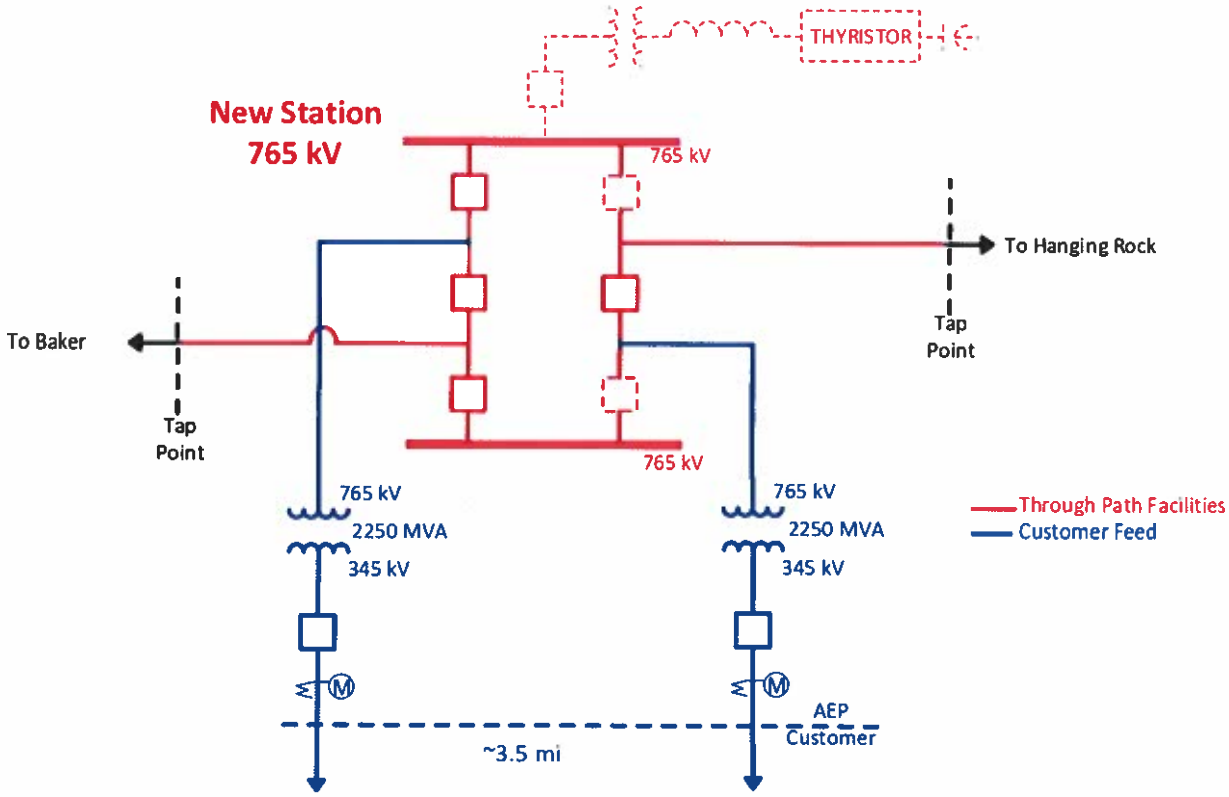

EXHIBIT B

Customer will provide Security by the dates and in the amounts set forth in the following schedule:

Line No.	Due Date	Amount (each line is an additional incremental Security amount)
1.	Provided at execution of Original Letter of Agreement	$50,000,000.00
2.	Due 12/30/2026	$50,000,000.00
3.	Due 09/30/2027	$50,000,000.00
4.	Due 03/31/2028	$50,000,000.00
5.	Due 09/30/2028	$120,160,645.00
	Cumulative Total Security	$320,160,645.00

Customer must provide the Security in one or more of the following forms:

A. One or more irrevocable standby letters of credit with a minimum term of 360 days, substantially in the form and containing the provisions of the specimen attached as Attachment A, or with such other provisions from the issuing bank as agreed to and approved by Company in its sole discretion, issued from a U.S. commercial bank or the U.S. branch of a foreign bank (the "Letter of Credit") that has and maintains a credit rating of at least A- from Standard and Poor's and an A3 credit rating from Moody's Investors Services (the "Required Credit Rating"). The Customer must cause the renewal or extension of the Letter of Credit for additional consecutive terms of 360 days or more no later than 30 days prior to each expiration date through the date the Customer has fully paid its obligations under the Contract. If the Letter of Credit is not renewed or extended as required herein, the Company will have the right to draw immediately upon the Letter of Credit and be entitled to hold the amounts so drawn as Security.

B. An irrevocable guaranty, substantially in the form and containing the provisions of the specimen attached as Attachment B, or with such other provisions as agreed to and approved by Company in its sole discretion (the "Guaranty"), from a guarantor that is the ultimate parent or a corporate affiliate, so long as the guarantor has and maintains the Required Credit Rating (the "Guarantor"). If the Customer desires to provide Security in the form of a Guaranty, the Customer shall provide financial information of the Guarantor as reasonably requested by the Company from time to

time, including annual audited financial statements, for so long as the Guaranty is in effect.

Attachment A

FORM OF IRREVOCABLE STANDBY LETTER OF CREDIT

DATE OF ISSUANCE: _____

[Beneficiary: Company Name and Address]

RE: Credit No. _____

We hereby establish this Irrevocable Standby Letter of Credit (this "Letter of Credit") in your favor for the account of _____ (the "Account Party"), for the maximum aggregate amount not exceeding _____ United States Dollars ($_____) (the "Stated Amount"), available to you ("Beneficiary") for payment at sight upon demand by presentation made at our counters at (Location), or by internationally recognized courier, on or before the expiration hereof or any automatically extended expiration date, against presentation to us of a Demand for Payment, dated and signed by a representative of the Beneficiary (the "Demand for Payment"), substantially in the form attached hereto as Annex A.

No other document or statement shall be required, and the Issuing Bank shall not inquire into the underlying transaction or the accuracy of any information set forth in the Demand for Payment.

Partial and multiple drawings are permitted hereunder, and each drawing shall reduce the available balance of this Letter of Credit on a dollar-for-dollar basis.

We hereby agree with you that documents drawn under and in compliance with the terms of this Letter of Credit shall be final and conclusive and shall be duly honored upon presentation as specified.

This Letter of Credit shall be governed by the International Standby Practices, International Chamber of Commerce Publication No. 590 ("ISP98"), and additionally by the laws of the State of New York, without regard to conflicts of law principles, except to the extent that the terms hereof are inconsistent with the provisions of ISP98, in which case the terms of this Letter of Credit shall govern. The Issuing Bank shall have a reasonable amount of time, not to exceed three (3) banking days, following the date of its receipt of documents from the Beneficiary, to determine if a presentation is complying and to inform the Beneficiary thereof accordingly; failure to provide such notice within such time shall constitute acceptance of the presentation.

In the event of an Act of God, riot, civil commotion, insurrection, war or any other cause beyond our control that interrupts our business (collectively, an "Interruption Event") and causes the place for presentation of this Letter of Credit to be closed for business or otherwise unable to receive presentations on the last day for presentation, the expiry date of this Letter of Credit will be automatically extended without amendment to a date thirty (30) Calendar Days after the place for presentation is fully reopened and capable of honoring drawings.

It is a condition of this Letter of Credit that it will be automatically extended without amendment for one (1) year from the expiration date hereof, or any future expiration date, unless at least ninety (90) days prior to any expiration date we notify you by internationally recognized courier, with confirmation of receipt, that we elect not to consider this Letter of Credit renewed for any such period. Upon receipt of any such non-renewal notice, the Beneficiary shall have the right to draw up to the full Stated Amount prior to the then-current expiration date.

All commissions, expenses and charges incurred with this Letter of Credit, including issuance, drawing, negotiation, and reimbursement fees, are for the account of the Account Party, and no such fees shall be deducted from any drawing made by the Beneficiary.

The Beneficiary may assign the proceeds of this Letter of Credit without the consent of the Issuing Bank or the Account Party.

EXPIRY DATE: [_____, 202_]

[BANK SIGNATURE]

Annex A

DEMAND FOR PAYMENT

Date: _____

To: [Issuing Bank Name]

Re: Irrevocable Standby Letter of Credit No. _____ (the "Letter of Credit")

The undersigned, a duly authorized representative of the Beneficiary, hereby certifies that:

1. The Account Party has failed to pay amounts due and payable to the Beneficiary or its assigns; and

2. The amount demanded hereby does not exceed the available balance under the Letter of Credit.

Accordingly, the Beneficiary hereby demands payment in the amount of:

USD $_____

Payment instructions:
[Wire / payment details to be provided separately or upon request]

Beneficiary: _____
By: _____
Name: _____
Title: _____

Attachment B

FORM OF CORPORATE GUARANTY

GUARANTY

TO: [AEP Company Name] and its successors and assigns (collectively "Beneficiary")

FOR GOOD AND VALUABLE CONSIDERATION, the receipt and sufficiency of which are hereby acknowledged, and to induce Beneficiary to enter into a *[name of contract]* dated as of _____, as the same may be amended from time to time (the "Agreement"), with *[Customer name]*, a(n) _____ *[entity type and jurisdiction]* ("Debtor"), the undersigned _____ *[guarantor name]*, a(n) _____ *[entity type and jurisdiction]* ("Guarantor"), hereby irrevocably and unconditionally guarantees the due punctual and full payment of any and all obligations of the Debtor to the Beneficiary now or hereafter due pursuant to the Agreement or pursuant to Applicable Law (as defined in the Agreement) in connection with the activities of the parties under the Agreement (the "Guaranteed Obligations"). Upon any failure by the Debtor to pay any of the Guaranteed Obligations, the Guarantor agrees that it will forthwith on demand pay any amounts which the Debtor has failed to pay the Beneficiary, at the place and in the manner specified in the Agreement. This Guaranty is a guaranty of payment and not merely a guaranty of collection. The Guarantor agrees that the Beneficiary may resort to the Guarantor for payment of any of the Guaranteed Obligations, whether or not the Beneficiary shall have resorted to any collateral security, or shall have proceeded against any other obligor principally or secondarily obligated with respect to any of the Guaranteed Obligations. Guarantor reserves the right to assert defenses which the Debtor may have to payment of any Guaranteed Obligations other than defenses based on lack of capacity, lack of authorization, lack of due execution, illegality, or limitations of actions, or arising from the bankruptcy, insolvency, or similar proceeding of the Debtor and other defenses expressly waived hereby.

The Guarantor agrees that, in the event of the dissolution or bankruptcy of the Debtor, if such event shall occur at a time when any of the Guaranteed Obligations may not then be due and payable, the Guarantor will pay the Beneficiary forthwith the full amount which would be payable hereunder by the Guarantor if all such Guaranteed Obligations were then due and payable and in default.

The obligations of the Guarantor hereunder shall be unconditional and absolute and, without limiting the generality of the foregoing, shall not be released, discharged or otherwise affected by:

(A) any extension, renewal, settlement, compromise, waiver, discharge, or release in respect of any Guaranteed Obligations of the Debtor;

(B) the existence, or extent of, any release, exchange, surrender, non-perfection, or invalidity of any direct or indirect security for any of the Guaranteed Obligations;

(C) any modification, amendment, waiver, extension of or supplement to the Agreement or any of the Guaranteed Obligations agreed to from time to time by the Debtor and the Beneficiary;

(D) any change in the corporate existence (including its constitution, laws, rules, regulations or powers), structure or ownership of the Debtor or the Guarantor, or any insolvency, bankruptcy, reorganization or other similar proceeding affecting the Debtor or its assets, the Guarantor or any other guarantor of any of the Guaranteed Obligations;

(E) the existence of any claim, set-off, or other rights which the Guarantor may have at any time against the Debtor, the Beneficiary, or any other corporation or person, whether in connection herewith or in connection with any related or unrelated transaction; provided that nothing herein shall prevent the assertion of any such claim by separate suit or compulsory counterclaim if such claim, set off, or other right arose in connection with the Guaranteed Obligations.

(F) except as to applicable statutes of limitation, failure, omission, delay, waiver or refusal by Beneficiary to exercise, in whole or in part, any right or remedy held by Beneficiary with respect to the Agreement or any transaction under the Agreement; or

(G) any other circumstance that might otherwise constitute a defense available to, or a discharge of, any Debtor or any other individual, partnership, joint venture, corporation, association, trust or other enterprise that is a party to the Agreement, or any other agreement or instrument (including any guarantor) in respect of the Guaranteed Obligations, other than payment in full of the Guaranteed Obligations.

This Guaranty shall remain in full force and effect until the date on which the Debtor is entitled by the Agreement to a release of its Security provided thereunder. Such termination shall not release Guarantor from liability for any Guaranteed Obligations arising prior to the effective date of such termination (even if the amount of such Guaranteed Obligations is not then fully determined). If at any time any payment of any of the Guaranteed Obligations is rescinded or must be otherwise restored or returned upon the insolvency, bankruptcy, or reorganization of the Debtor, the Guarantor's obligations hereunder with respect to such payment shall be reinstated at such time as though such payment had not been made. If Debtor's assets or a major portion thereof are transferred to any other party or parties otherwise than by operation of law, and if Beneficiary enters into any transaction whereby such transferee or transferees become indebted to Beneficiary, this Guaranty, subject to all the other terms hereof, shall apply to any Guaranteed Obligations or balance of Guaranteed Obligations of such other transferee or transferees to Beneficiary.

The Guarantor irrevocably waives acceptance hereof, diligence, presentment, demand, protest, notice of dishonor, notice of any sale of collateral and any notice not provided for herein, and any requirement that at any time any person exhaust any right to take any action against the Debtor or its assets or any other guarantor or person. Guarantor further waives notice of the transactions between Beneficiary and Debtor, notice of the execution and delivery, amendment, extension, or renewal of any present or future instrument pertaining to the Guaranteed Obligations, notice of default by Debtor, and any other notice not expressly required by this Guaranty. Guarantor further consents, without further notice, to any extension or extensions of the time or times of payment of said Guaranteed Obligations, or any portion thereof, and to any change in form or amount, or renewal at any time, of such Guaranteed Obligations, or any portion

thereof, in each case up to an aggregate amount set forth below. Should any present or future Guaranteed Obligations incurred by Debtor not be paid when due or at the time to which the same may be extended, Beneficiary may proceed against Guarantor for such Obligations at any time, without notice and without any proceeding or action against Debtor.

Guarantor shall not exercise any rights which it may have or acquire by way of subrogation until all of the Guaranteed Obligations are paid in full to Beneficiary. Guarantor shall not enforce any right or receive any payment by way of subrogation until all of the Guaranteed Obligations then due shall have been paid in full and Beneficiary agrees to take at Guarantor's expense such steps as the Guarantor may reasonably request to implement such subrogation. If any amounts are paid to Guarantor in violation of the foregoing limitations, then such amounts shall be held in trust for the benefit of Beneficiary and shall forthwith be paid to Beneficiary by Guarantor to reduce the amount of outstanding Obligations, whether matured or unmatured.

In the event that acceleration of the time for payment of any amount payable by the Debtor under the Agreement is stayed upon the insolvency, bankruptcy or reorganization of the Debtor, all such amounts otherwise subject to acceleration or required to be paid upon an early termination pursuant to the terms of the Agreement shall nonetheless be payable by the Guarantor hereunder forthwith on demand by the Beneficiary.

The Guaranty shall be binding upon and inure to the benefit of the Beneficiary and its successors and assigns. Beneficiary may assign this Guaranty in its sole discretion. Guarantor may not assign its rights and obligations hereunder, whether by operation of law or otherwise, without the prior written consent of the Beneficiary which consent may be arbitrarily withheld, and any such purported assignment without such written consent will be void.

Except for increases in the aggregate amount of Guaranteed Obligations, no other provision of this Guaranty may be amended, supplemented, or modified, nor any of the terms and conditions hereof waived, except by a written instrument executed by the Guarantor and an authorized representative of the Beneficiary.

The rights, powers, remedies, and privileges provided in this Guaranty are cumulative and not exclusive of any rights, powers, remedies, and privileges provided by law and any other agreement.

Notwithstanding anything in this Guaranty to the contrary, Guarantor's liability under this Guaranty and the Beneficiary's right of recovery under the same shall be limited to an aggregate amount of _____ Dollars ($_____). In the event Beneficiary engages in litigation to enforce this Guaranty, Guarantor agrees to pay, in addition to any amounts of Debtor which Guarantor has otherwise guaranteed to pay hereunder, any and all costs and expenses incurred by Beneficiary (including reasonable attorney's fees) in enforcing this Guaranty provided Beneficiary is successful in such litigation.

Guarantor represents and warrants that:

(A) The Guarantor is duly organized, validly existing and in good standing under the laws of the jurisdiction of its incorporation and has full corporate power to execute, deliver and perform this Guaranty.

(B) The execution, delivery, and performance of the Guaranty have been and remain duly authorized by all necessary corporate action and do not contravene any provision of law or of the Guarantor's constitutional documents or any contractual restriction binding on the Guarantor or its assets.

(C) All consents, authorizations and approvals of, and registrations and declarations with, any governmental authority necessary for the due execution, delivery and performance of this Guaranty have been obtained and remain in full force and effect and all conditions thereof have been duly complied with, and no other action by and no notice to or filing with, any governmental authority is required in connection with the execution, delivery, or performance of this Guaranty.

(D) This Guaranty constitutes the legal, valid and binding obligation of the Guarantor enforceable against the Guarantor in accordance with its terms, subject, as to enforcement, to bankruptcy, insolvency, reorganization and other laws of general applicability relating to or affecting creditors' rights and to general equity principles.

All notices or communications to the other party may be sent via email and shall be followed in writing by registered or certified mail, or overnight delivery service to:

To Guarantor:

_____

Attn: _____

_____

_____

Email:

To Beneficiary:

[AEP Company]

c/o American Electric Power Service Corporation

Attn: Credit Risk Management

1 Riverside Plaza, 27th Floor

Columbus, OH 43215

Email: Columbus_Credit@aep.com

or such other address as each party shall from time to time specify.

If any provision of this Guaranty is found by a court of competent jurisdiction to be void, illegal or otherwise unenforceable in that jurisdiction, such provision, to the extent of its invalidity, shall be severed from this Guaranty and be ineffective in that jurisdiction; provided, however, that such finding shall not affect the validity, legality or enforceability of such provision in any other jurisdiction or the validity, legality or enforceability of any other provision of this Guaranty. THIS GUARANTY WILL BE GOVERNED BY AND CONSTRUED IN ACCORDANCE WITH THE LAWS OF THE STATE OF OHIO, WITHOUT REFERENCE TO CHOICE OF LAW DOCTRINE. Guarantor waives any right to trial by jury with respect to this Guaranty.

IN WITNESS WHEREOF, the Guarantor has caused this Guaranty to be duly executed as of the date set forth below.

(_____)

By: _____

Name:

Title:

Date:

EXHIBIT C

Load Ramp Schedule

October 2028	100 MW
November 2028	200 MW
December 2028	250 MW
February 2029	350 MW
March 2029	450 MW
April 2029	500 MW
July 2029	650 MW
August 2029	800 MW
September 2029	950 MW
October 2029	1,000 MW

EXHIBIT AJE-3

Muskie Data Campus Power Fact Sheet

Muskie Data Campus Power Fact Sheet

November 2026

TeraWulf plans to develop the Muskie Data Campus at EastPark Industrial Park, in Boyd and Greenup Counties, for artificial intelligence and high-performance computing. As part of that development process, TeraWulf recently signed an amended electric service agreement with Kentucky Power providing for 1,000 MW of load at the campus by 2029. The agreement ensures that TeraWulf will pay for all of its electricity costs and also includes $100 million in winter bill credits for residential customers funded by TeraWulf. Financial commitments designed to protect existing customers are also included in the agreement.

The amended agreement

TeraWulf and Kentucky Power signed the original electric service agreement in May 2026 for up to 500 MW under the utility's standard industrial tariff. The amended agreement, signed November 4, 2026, adds a second 500 MW phase and moves the target in-service date at the campus earlier, from 2030 to 2029. The amended agreement requires Kentucky Public Service Commission (KPSC) approval. Until then, the original agreement remains in effect.

When would power become available. Service is scheduled to begin with 100 MW in October 2028 and grow to the full 1,000 MW by October 2029, depending on regulatory approvals and construction.

Winter bill credits. TeraWulf would fund $10 million a year for ten years in credits for Kentucky Power's residential customers. These payments would be in addition to the campus's own electricity bills. Credits would appear on January through March bills beginning in 2029, subject to KPSC approval. For a typical residential customer, the bill credits could amount to approximately $25 per month during the winter heating season.

No discount on standard electricity charges. The amended agreement does not discount Kentucky Power's standard charges for power capacity or electricity use. It includes additional commitments from TeraWulf in addition to those charges.

Payments for energy before the new plant opens. Until Kentucky Power's planned new gas plant at Big Sandy begins operating, the campus would pay the actual market cost of the electricity it uses in place of the utility's standard fuel charge. Those market electricity costs would not be included in other customers' fuel charges. During this period, the campus would also pay a $17,000 monthly administrative fee.

Payments during construction of the new plant. If the KPSC approves both the special contract and the planned Big Sandy plant, TeraWulf would pay the financing costs on the plant's construction, known as carrying charges until the plant begins service. Those costs would otherwise be added to the plant's cost and recovered through all customers' rates.

How the agreement protects existing customers

The agreement combines long-term payment commitments, financial guarantees, and restrictions on leaving or reducing service. These provisions are designed to protect existing customers if the campus uses less electricity than expected or ends service.

Long-term commitments. Phase 1 retains its 20-year term; Phase 2 has a 15-year term, each from its own in-service date. The campus cannot reduce contracted capacity or exit during the first ten years.

Minimum monthly payments. TeraWulf must pay monthly charges based on at least 90% of the power capacity it has committed to purchase, even if it uses less. This provides a minimum payment commitment to Kentucky Power rather than making all revenue depend on actual electricity use.

Limits on leaving or reducing service. The agreement includes lengthy notice commitments and exit fees for reducing or ending service at the campus.

Financial guarantees. The amended agreements require TeraWulf to provide approximately $756 million in financial security to Kentucky Power. This financial guarantee is separate from TeraWulf's electricity payments, residential bill-credit payments, and payments during construction of the Big Sandy plant.

Who reviews and approves the agreement

The KPSC must approve the special contract and separately authorize the planned Big Sandy plant. The Kentucky Attorney General's Office of Rate Intervention may participate in these proceedings on behalf of residential consumers.

TeraWulf will submit an energy plan for the campus under Governor Beshear's Executive Order 2026-494 on Data Center Development, as it did for its Justified Data Campus in Hawesville.

How electricity would reach Muskie

The campus would receive electricity from the regional power grid, which connects power plants, transmission lines and customers across a broad area. It would not receive electricity exclusively from one power plant.

Serving the campus requires a new utility substation and new transmission lines. A substation connects power lines and changes electricity to the voltage needed for delivery. The planned infrastructure would connect the campus to AEP's existing Baker-Hanging Rock 765-kV line through a new utility substation and two new 345-kV lines, each about 3.5 miles long.

Kentucky Power's equipment. Kentucky Power would build, own and operate the utility's new substation and transmission lines. It could also use this equipment to serve other customers. TeraWulf would provide the necessary land and rights to place lines on its property at no cost to Kentucky Power.

Kentucky Power recovers the cost of these additions through its regulated tariff system, subject to KPSC review and approval. TeraWulf's approximately $320 million in grid-construction security backs its obligation to reimburse Kentucky Power if the project is canceled.

TeraWulf's equipment. TeraWulf would separately build and pay for its own on-site substation. Kentucky Power would not perform work on equipment owned by TeraWulf.

Construction of the new utility substation and transmission lines has not begun and requires KPSC approval.

How grid reliability is evaluated

Kentucky Power has studied the local transmission system to determine

what equipment and upgrades are needed to serve the campus safely.

PJM, the organization that manages the regional electric grid, will independently study how the new connection would affect the wider system. Any problems identified through that review must be addressed before the campus receives power.

These studies are intended to ensure that the campus can receive service without compromising reliability for surrounding homes and businesses.

Common questions

How would the agreement affect my electricity bill?

The agreement is designed to help, not burden, existing customers. Subject to KPSC approval, Kentucky Power's residential customers would receive $100 million in winter bill credits funded by TeraWulf over ten years. Kentucky Power will determine how the credits are distributed, subject to KPSC approval.

The campus would pay standard electricity charges without a discount, along with the additional payments described above. Kentucky Power will present its analysis of the agreement's effects on customer bills to the KPSC, which will determine how costs are recovered.

Could the campus provide benefits beyond the bill credits?

A large customer paying standard rates can help spread the utility's costs across a larger revenue base. These costs include power plants, lines, substations and maintenance.

Once the full 1,000 MW power commitment is in effect, the campus's minimum payment obligation is estimated at approximately $250 million annually at today's rates, even if it uses no electricity.

The effect on other customers' rates will depend on utility costs, electricity use and regulatory decisions. The agreement does not guarantee a specific reduction in rates beyond the proposed bill credits.

How much funding could the campus generate for local schools?

Local schools are expected to benefit through property taxes on the campus and through Kentucky's school utility tax, which school districts may levy at up to 3% of electric bills. For example, Boyd County Schools levies the full 3% utility tax.

TeraWulf will not seek an exemption from this tax.

Will the campus pay state sales tax on its electricity?

Yes. Kentucky's 6% sales tax applies to the campus's electric bills. At full operation, we estimate the campus's electricity use will generate about $40 million a year in state sales tax, or about $1 billion over its first 20 years. TeraWulf will not seek an exemption from this tax.

What happens if the campus uses less electricity or shuts down?

We don't expect the campus to shut down. Using less electricity does not eliminate TeraWulf's minimum payment obligations: it must still pay for at least 90% of its contracted capacity every month. The campus cannot exit in its first ten years; after that, the agreements require advance notice and an exit fee of up to five years of minimum payments. They also include approximately $756 million in financial guarantees that Kentucky Power can draw on if TeraWulf fails to meet its obligations.

The utility's power lines and other grid equipment would remain Kentucky Power assets that could serve other customers.

Will there be on-site nuclear reactors?

No. There are no plans for on-site small modular reactors or other on-site nuclear generation. The campus would receive electricity through Kentucky Power's transmission system.

Could Muskie expand beyond 1,000 MW?

The amended agreement covers up to 1,000 MW. TeraWulf is evaluating the site's potential for further expansion over time. Any expansion would depend on additional utility planning, infrastructure, agreements and regulatory approvals.

More information

For campus information and updates, visit muskiedatacampus.com.

For information about Kentucky Power's approach to large-load development and customer protections, visit Kentucky Power's data center information page.

Questions about Muskie? Contact info@muskiedatacampus.com.

Disclosures and Forward-Looking Statements

This fact sheet, dated November 9, 2026, replaces the October 5, 2026 version and summarizes the amended agreements. The agreements' terms and applicable regulatory decisions govern. Project schedules, financial estimates and anticipated benefits remain subject to applicable conditions and approvals.

This fact sheet contains forward-looking statements. Actual results may differ materially from those described. For information about risks and uncertainties, please see TeraWulf's filings with the Securities and Exchange Commission.

EXHIBIT AJE-4

Muskie Data Campus Economic Benefits Summary

Muskie Data Campus Economic Benefits

November 2026

TeraWulf plans to develop the Muskie Data Campus at EastPark Industrial Park, in Boyd and Greenup Counties, for artificial intelligence and high-performance computing. At its full 1,000 MW, the campus is expected to bring about $8.5 billion of investment, about 3,500 construction jobs, 350 to 500 permanent jobs across TeraWulf and its tenant, and more than $200 million a year in state and local taxes once fully operating, or about $4.8 billion over its first 20 years.

Investment and jobs

Investment. TeraWulf expects to invest about $8.5 billion in four compute buildings, built in two 500 MW phases. Kentucky Power service is scheduled to begin with 100 MW in October 2028 and grow to the full 1,000 MW by October 2029, depending on regulatory approvals and construction.

Jobs. Construction would create about 3,500 jobs across the building trades, with about $1.2 billion in construction payroll. Once operating, the campus would support 350 to 500 full-time jobs: 200 to 300 TeraWulf employees and 150 to 200 tenant employees.

State and local taxes

TeraWulf estimates the campus would pay about $354 million in state and local taxes during construction, about $89 million in its first year of operation while it ramps up, and more than $200 million a year after that, or about $4.8 billion over 20 years.

$ millions	Construction	First year	20 years
Property taxes (state and local)	–	28.6	1,208
School utility tax	–	9.5	499
Corporate income and local net-profits taxes	–	31.2	1,648
State sales tax on electricity	–	19.5	1,028
State sales tax on construction materials and equipment	305.8	–	306
Wage, occupational and insurance premium taxes	48.5	0.5	74
Total	**354.3**	**89.3**	**4,763**

Local schools. Boyd County and Greenup County schools would receive about $1.1 billion over 20 years from property taxes and the 3% school utility tax, or about $810 million after the state's SEEK funding adjustments. TeraWulf will not seek an exemption from the school utility tax or the state sales tax on electricity.

Winter bill credits

TeraWulf would fund $100 million in winter bill credits for Kentucky Power's residential customers, $10 million a year for ten years on January through March bills from 2029, subject to PSC approval.

Estimates and forward-looking statements

Tax estimates are TeraWulf projections at 2026 tax rates, covering construction and 20 years of operation. The first year reflects the ramp: 500 MW average load, one of four buildings on the January 2029 property assessment, and income and payroll taxes at half. Taxes on electricity assume a 90% load factor and $80 per MWh in the first year, rising 3% a year. A full economic impact study is underway. This fact sheet contains forward-looking statements. Actual results may differ materially from those described. For information about risks and uncertainties, please see TeraWulf's filings with the Securities and Exchange Commission.

EXHIBIT AJE-5

TeraWulf Letter Requesting Separate Applications

TERAWULF

DB LONG HUNTS DATA LLC

VIA OVERNIGHT MAIL

October 26, 2026

Amy J. Elliott
Vice President, Regulatory and External Affairs
Kentucky Power Company
1645 Winchester Avenue
Ashland, KY 41101

Re: DB Long Hunts LLC Special Contract

Dear Amy:

First, let me thank you, Cindy, Amanda, and everyone at AEP who worked to make this project a reality. Building a multi-billion-dollar data center is complex. Many moving parts must come together, from land acquisition, transmission access, generation supply, financing, construction, tenant negotiations, and community engagement. We are on schedule with our 482 MW data center in Western Kentucky in the Big Rivers service territory, and we are excited to continue work on this 500 MW Phase One and 500 MW Phase Two project in Boyd and Greenup Counties. The State and local support for this important economic development project has been outstanding.

Phase One for the first 500 MW is proceeding through a May 22, 2026 Service Agreement pursuant to Kentucky Power's Commission-approved Tariff I.G.S., including Tariff I.G.S. demand charges, energy charges, all riders, 20-year contract term, 90% minimum billing demand, collateral, and exit fee. The May 22, 2026 Service Agreement will be superseded if the Commission approves the October 1, 2026 Phase Two Special Contract. Under the Phase Two Special Contract for an additional 500 MW for 15-years, we are subject to all Tariff I.G.S. rates, terms, and conditions plus we are required to fund one hundred million dollars in Residential Bill Credits, pay for up to $465 million in financing costs for the new Big Sandy Combined Cycle Project Kentucky Power is seeking CPCN approval of, and pay PJM market energy costs, and incur all PJM energy market risks, for all of our usage (in lieu of the FAC) until the in-service date of the Big Sandy Combined Cycle Project (assuming it is approved by the Commission). The payment of PJM energy charges is intended to protect other customers from market risk. We understand that if the CPCN is denied, or if our Special Contract is not approved, then we will only receive power for Phase One. We are currently moving forward with Phase One development.

I am writing to request that Kentucky Power submit the Special Contract for approval at the Kentucky Public Service Commission separately from the Company's expected CPCN filing. Counsel has advised me that, if filed separately, the Special Contract case may proceed on a faster timeline than the CPCN case. A CPCN can take up to eight months. I am also advised that the Special Contract is subject to a different legal standard than the CPCN. A faster resolution would be beneficial to advance both tenant contracting and project financing. From a tenant perspective, a hyperscaler considering a long-term commitment to the project will want some level of certainty whether it is negotiating for 500 MW or 1,000 MW. The same is true from a financing perspective. If we are able to obtain power for both Phase One and Phase Two, then the economics of the entire project will improve (due to economies of scale and other efficiencies), thus allowing us to finance on more favorable terms. Approval of the Special Contract, even if service for Phase Two is effectively dependent on the outcome of the CPCN case, will provide additional certainty in our financing negotiations.

Thank you.

Respectfully submitted,

Nazar Khan, Co-Founder & Chief Technology Officer

Cc: Patrick Kelleher, American Electric Power
Ken Gish, American Electric Power
Amanda Clark, American Electric Power
Stefanie Fleischmann, TeraWulf Inc.
James Kacergis, TeraWulf Inc.
Mike Kurtz, Boehm Kurtz & Lowry

PUBLIC EXHIBIT AJE-6

Bridge Capacity Agreement

Confidential

Trade Date: 11/05/2026

American Electric Power Service Corporation,
as agent for Kentucky Power Company
1 Riverside Plaza, 14th Floor
Columbus, OH 43215

CONFIRMATION LETTER

The purpose of this Confirmation Letter ("Confirmation Letter") is to confirm the terms and conditions of the electric power sales transaction ("Power Transaction") agreed upon by AEP Generation Resources Inc., a Delaware corporation ("Seller" or "Party A") and American Electric Power Service Corporation, as agent for Kentucky Power Company ("Buyer" or "Party B") (singularly a "Party" and collectively the "Parties") on the Trade Date specified above.

There is no master agreement executed and in force between the Parties. This Confirmation Letter shall supplement and form part of, and be subject to, an agreement in the form of the Master Power Purchase and Sale Agreement, as published by the Edison Electric Institute ("EEI") and the National Energy Marketers Association, Version 2.1 (modified 4/25/00), as if the Parties had executed an agreement in such form, with no elections made on the Cover Sheet other than the automatic default elections, making the optional provision in Section 2.4 applicable and making the *Confidentiality* provisions in Article 10 applicable (the "Master Agreement").

In the event the Parties subsequently enter into EEI's form of Master Agreement ("New Master Agreement"), this Confirmation Letter will supplement, form a part of and be subject to that New Master Agreement and all provisions contained in or incorporated by reference in that New Master Agreement, including credit support terms, upon its execution will govern this Confirmation Letter except as expressly modified below.

Terms used but not defined herein shall have the meanings ascribed to them in the Master Agreement or New Master Agreement, as applicable. Capitalized terms used herein and not otherwise defined in the Master Agreement, the New Master Agreement, as applicable, or herein shall have the meanings ascribed to them in the PJM Rules of PJM Interconnection, LLC ("PJM"). The Parties agree to adopt and incorporate herein by reference such PJM Rules and agree to be bound by all terms therein, as such PJM Rules may be modified throughout the Delivery Term. In addition, Party A's FERC Market-Based Rate Tariff and Party B's FERC Market-Based Rate Tariff are incorporated herein by reference. Any inconsistency between this Confirmation Letter and the Master Agreement or the New Master Agreement, as applicable, shall be resolved in favor of this Confirmation Letter. This Confirmation Letter constitutes a "Confirmation" and the Power Transaction constitutes a "Transaction", each as referred to in the Master Agreement or New Master Agreement, as applicable.

NOW, THEREFORE, in consideration of the premises and mutual covenants set forth herein and the receipt and sufficiency of which are hereby acknowledged, the Parties agree as follows:

TERMS:

Buyer: American Electric Power Service Corporation as agent for Kentucky Power Company

ATTN: Confirmations Department
Email: [redacted]

Seller: AEP Generation Resources Inc.

ATTN: Confirmations
Email: [redacted]

PRODUCT: Available Installed Capacity ("ICAP") that converts into Unit-Specific Accredited UCAP in each Delivery Year from the Wolf Hills Energy electric generating facility and Seller's share of the OVEC/IKEC electric generation facilities (each a "Facility"). This Confirmation Letter does not transfer any right to the Energy output of the Facility or any other electric generating facility, nor any PJM Energy charges or credits or any other revenues associated with that Energy.

DELIVERY TERM: From and including Hour Ending ("HE") 0100 Eastern Prevailing Time ("EPT") on June 1, 2029, through and including HE 2400 EPT, on May 31, 2031.

CONTRACT QUANTITY: All Accredited UCAP from each Facility's Available ICAP for each calendar day in the Delivery Term, as such quantity (currently 262.9 MW of ICAP from Wolf Hills and currently 430.3 MW from Seller's share of OVEC/IKEC electric generation facilities) may be adjusted per the Scheduling Section below.

CONTRACT PRICE: From June 1, 2029 through May 31, 2031, for all of each Facility's Accredited UCAP (in MWs), in Dollars per MW-Day ($ per MW-Day) at the PJM BRA Auction Price in the applicable PJM Zone where the Facility is located for each such day of the applicable PJM Delivery Year.

SCHEDULING: Seller shall accomplish delivery and Buyer shall accomplish receipt of the Product by entering and confirming appropriate unit-specific, bilateral transactions in the PJM Capacity Exchange System or any successor system, as applicable ("System"). Seller shall schedule the transfer in the System of the Contract Quantity of Product (i) for PJM Delivery Year 29/30, by no later than [redacted] and (ii) for the remaining PJM Delivery Year in the Delivery Term (ie 30/31), within ten (10) Business

Days following the Trade Date ("Product Transfer"). Seller will provide Buyer with the transaction ID for the Product Transfer once obtained. Within no more than three (3) Business Days of Seller providing Buyer with the transaction ID, Buyer shall confirm the unit-specific transaction in the System. Seller and Buyer shall use commercially reasonable efforts to cooperate with each other to ensure that such entry and confirmation is completed in a timely manner as per the PJM rules.

The Facility is currently and will continue to be subject to periodic accreditation processes conducted by PJM. Pursuant to this Confirmation Letter, Seller shall provide and Buyer shall purchase all capacity attributes accredited to the Facility by PJM for each Delivery Year of the Delivery Term or, if applicable, each identified season of each such Delivery Year. The Contract Quantity listed above is an estimated amount for the Delivery Term, and will be automatically revised in accordance with PJM's then-current accreditation for the Facility's capacity attributes.

For purposes of this Confirmation Letter, the entry and confirmation by Seller and Buyer shall replace the definitions of "Schedule" or "Scheduling" in the Master Agreement.

PAYMENT: On or before June 1, 2029 and continuing on the first day of the month for each subsequent month in each Delivery Year during the Delivery Term, Seller shall deliver an invoice to Buyer that equals one-twelfth of the aggregate Contract Price for such Delivery Year. Such invoice shall be due and payable by Buyer within thirty (30) calendar days following Buyer's receipt of such invoice.

SELLER'S BANK (Wire Transfer) INFORMATION:

Bank:	Seller to provide separately
ABA Number:	Seller to provide separately
Account Number:	Seller to provide separately
Account Name:	Seller to provide separately

Charges and Credits Related To Product: Buyer and Seller acknowledge that this Power Transaction does not result in any change of control of the Facility or any other electric generation facility, that such Power Transaction is for the specified Product only, and that no other products (energy, ancillary services of any kind, etc.) are included in this Power Transaction.

[redacted]

General. If either Party receives any payment from PJM that is intended for the other Party pursuant to this Power Transaction, whether before or after the Power Transaction has terminated, the receiving Party shall, no later than ten (10) Business Days after notice of such payment, remit to the other Party, by wire transfer, payment in immediately available funds an amount equal to such inadvertently received payments; provided that it is understood that Buyer is entitled to, and intended to receive, all payments and other revenue in respect of the Product accruing during, or otherwise

in respect of, the Delivery Term. In addition, if a Party receives a Charge from PJM that is intended for the other Party pursuant to this Power Transaction, whether before or after the Power Transaction has terminated, the Party receiving such Charge may deliver written notice of the charge to the other Party and the other Party shall pay such charge within five (5) Business Days of receiving written notice.

Standard of Operation & Maintenance:

Seller shall conform to and abide by PJM Rules required to ensure that the Product is eligible to participate in the PJM Capacity market for each Delivery Year during the Delivery Term. To the extent that Seller does not operate the Facility in accordance with such PJM Rules and such failure results in monetary penalties being assessed to Buyer, Seller shall reimburse Buyer for such monetary penalties.

Representations and Warranties:

In addition to the representations and warranties in the Master Agreement, each Party hereby represents and warrants as follows:

(A) it is a member in good standing of PJM, and is qualified and capable of executing and confirming this Power Transaction, and any subsequent transfers, for the Accredited UCAP MW amount(s) set forth in this Confirmation Letter.
(B) the execution and performance of its obligations under this Confirmation Letter, with any applicable regulatory approvals and consents, will not conflict with or constitute a breach or default under any contract or agreement to which it is a party or any judgment, order statute, law or regulation that is applicable to it; and
(C) it has or will apply for all applicable regulatory approval and consents from governmental entities that are required to undertake its obligations under this Confirmation Letter.

Performance Assurance:

Party A Credit Protection

The Parties elect to apply clause (b) (*Credit Assurances*) of Section 8.1 (*Party A Credit Protection*) of the Master Agreement. Clauses (a) (*Financial Information*), (c) (*Collateral Threshold*), (d) (*Downgrade Event*), and (e) (*Guarantor for Party B*) of Section 8.1 (*Party A Credit Protection*) of the Master Agreement do not apply.

Party B Credit Protection

The Parties elect to apply clause (b) (*Credit Assurances*) and (e) (*Guarantor for Party A –American Electric Power Company, Inc.*) of Section 8.2 (*Party*

B Credit Protection) of the Master Agreement. Clauses (a) (*Financial Information*), (c) (*Collateral Threshold*), (d) (*Downgrade Event*), of Section 8.2 (*Party B Credit Protection*) of the Master Agreement do not apply. With respect to 8.2(b) Credit Assurance, if Party B has reasonable grounds to request adequate assurance, Party B can request up to $[redacted] per MW of Performance Assurance from Party A.

[redacted]

SPECIAL CONDITIONS:

Mobile-Sierra doctrine.

(a) Absent the agreement of the Parties to the proposed change, the standard of review for changes to any rate, charge, classification, term or condition of the Master Agreement or this Confirmation Letter, whether proposed by a Party (to the extent that any waiver in subsection (b) below is unenforceable or ineffective as to such Party), a non-party, or the FERC acting *sua sponte*, shall solely be the "public interest" application of the "just and reasonable" standard of review set forth in United Gas Pipe Line Co. v. Mobile Gas Service Corp., 350 U.S. 332 (1956) and Federal Power Commission v. Sierra Pacific Power Co., 350 U.S. 348 (1956), as clarified by Morgan Stanley Capital Group, Inc. v. Public Util. Dist. No. 1 of Snohomish, 554 U.S. 527 (2008), and NRG Power Marketing LLC v. Maine Pub. Util. Comm'n, 558 U.S. 165 (2010) (the "Mobile-Sierra" doctrine).

(b) In addition, and notwithstanding the foregoing subsection (a), to the fullest extent permitted by applicable law, each Party, for itself and its successors and assigns, hereby expressly and irrevocably waives any rights it can or may have, now or in the future, whether under §§ 205 and/or 206 of the Federal Power Act or otherwise, to seek to obtain from FERC by any means, directly or indirectly (through complaint, investigation or otherwise), and each hereby covenants and agrees not at any time to seek to so obtain, an order from FERC changing any section of this Master Agreement or Confirmation Letter specifying the rate, charge, classification, or other term or condition agreed to by the Parties, it being the express intent of the Parties that, to the fullest extent permitted by applicable law, neither Party shall unilaterally seek to obtain from FERC any relief changing the rate, charge, classification, or other term or condition of this Master

Agreement or Confirmation Letter, notwithstanding any subsequent changes in applicable law or market conditions that may occur. In the event it were to be determined that applicable law precludes the Parties from waiving their rights to seek changes from FERC to their market-based power sales contracts (including entering into covenants not to do so) then this subsection (b) shall not apply, provided that, consistent with the foregoing subsection (a), neither Party shall seek any such changes except solely under the "public interest" application of the "just and reasonable" standard of review and otherwise as set forth in the foregoing section (a). Notwithstanding any of the foregoing in this section, if the FERC determines that a Party to this Master Agreement or Confirmation Letter is entitled to a refund, then nothing in this section shall bar that Party from entitlement to such right.

DEFINITIONS: The terms and conditions of this Confirmation Letter, and all documents relating to this Confirmation Letter and any information made available by one Party or its advisors to the other Party or its advisors with respect to this Confirmation Letter are confidential (collectively referred to hereafter as "Confidential Information") and governed by the Confidentiality provisions set forth in Section 10.11 of the Master Agreement.

"Available Capacity" means the available capacity in MW indicated for the Facility on the System.

"Capacity Resources" has the meaning given to that term by Article 1 of the PJM RAA.

"Charge" means any Compliance Charges billed by PJM, including charges billed by PJM to, and paid by, Buyer under Schedule 9-5 (*Capacity Resource and Obligation Management Service*) and Schedule 9-6 (*Management Service Cost*) of the PJM OATT, as they may be revised from time to time.

"Compliance Charges" means any charges provided for or defined in the PJM Rules, as the same may be revised from time to time, including, by way of example, and not limitation, any Non-Performance Assessments or Charges, Capacity Resource Deficiency Charges or resource performance assessments, Generation Resource Rating Test Failure Charges, Load Management Test Failure Charges, Emergency Procedure Charges, or Transmission Upgrade Delay Penalty Charges, or other charges related to the Product.

"Credits" means any refund or adjustment in connection with the settlement or re-settlement of Charges or Compliance Charges, or relief from Compliance Charges, Bonus Performance Credits, in each case as determined by PJM.

"ELCC Class Rating" has the meaning given to that term in the PJM RAA.

"ELCC Resource Performance Adjustment" has the meaning given to that term in the PJM RAA.

"FERC" means the Federal Energy Regulatory Commission.

"Generation Capacity Resource" has the meaning given to that term in Article 1 of the PJM RAA.

"Governmental Authority" means any federal, state, local or municipal governmental body; any governmental, quasi-governmental, regulatory or administrative agency, commission, body or other authority exercising or entitled to exercise any administrative, executive, judicial, legislative, policy, regulatory or taxing authority or power; or any court or governmental tribunal.

"Locational Constraints" has the meaning given to that term in the Attachment A: Glossary of Terms in PJM Manual 18.

"Locational Deliverability Area" or **"LDA"** means the regions and sub-regions in PJM used to evaluate Locational Constraints as referenced in PJM Manual 18. LDAs include EDC zones, sub-zones, and combination of zones.

"Members" has the meaning given to that term in the PJM Rules.

"NERC" means the North American Electric Reliability Corporation.

"PJM OATT" means the *Open Access Transmission Tariff of PJM*, as such agreement is in effect on the date of this Confirmation Letter.

"PJM RAA" means the *Reliability Assurance Agreement Among Load Serving Entities in the PJM Region*, as such agreement is in effect on the date of this Confirmation Letter.

"PJM Rules" the PJM Open Access Transmission Tariff, the applicable PJM Reliability Assurance Agreement, PJM Amended and Restated Operating Agreement, and manuals and/or rules issued by PJM to govern activities on its system.

"Transmission Operator" means PJM or any successor independent system operator, regional transmission operator or other transmission operator from time to time having authority to control the transmission Control Area to which the Facility is interconnected.

"Unforced Capacity" has the meaning given to that term in Article 1 of the PJM RAA.

IN WITNESS WHEREOF, the Parties have caused their duly authorized representatives to execute this Confirmation Letter on their behalf and as of the later of the dates indicated below.

Seller's Acknowledgment
AEP Generation Resources Inc.

By: [signature]

Its: Vice President

Date: 11-11-26

Buyer's Acknowledgment
American Electric Power Service Corporation, as agent for Kentucky Power Company

By: Signed by: Tom O. Prestho 8A029EA34C0949D... Initial JEJ

Its: Vice President Market Operations

Date: 11/5/2026 | 5:49 PM EST

EXHIBIT AJE-7

2026 Purchase Power Agreement Request for Proposal

American Electric Power Service Corporation
as agent for
Kentucky Power Company

Request for Proposals
Power Purchase Agreements (PPAs)

from Qualified Bidders
for

New and Operational Resources

Kentucky Power Company is seeking Combined Cycle Natural Gas resources via RFP totaling:

800 MW of Accredited Nameplate Capacity.

This RFP is associated with PPAs only.
The other RFPs may be found at the Web Address noted below.

The Resources requested in this RFP will be acquired via PPAs for purchase of the Energy, Capacity, and Ancillary Services).

RFP Issued: August 3, 2026
Proposals Due: September 2, 2026

Web Address: www.kentuckypower.com/rfp

Table of Contents

Background 1

1. Introduction 1
2. RFP Overview 2
3. Product Description and Requirements 3
4. PPA Bid Price and Structure 4
5. RFP Schedule and Proposal Submission 6
6. Proposal Content 7
7. Proposal Evaluation 9
8. Reservation of Rights 15
9. Confidentiality 16
10. Bidder's Responsibilities 16
11. Contacts 17

Appendices

Project Summary ..... Appendix A

PPA Proposal Bid Pricing ..... Appendix B

Bidder's Credit-Related Information ..... Appendix C

Form PPA and Term Sheet ..... Appendix D

(Intentionally Left Blank) ..... Appendix E

Thermal Resource Information ..... Appendix F

Financing Plan ..... Appendix G

Site / Environmental / Wildlife Information ..... Appendix H

Other Non-Price Factor Documentation ..... Appendix I

Operational Resource Information ..... Appendix J

Proposal Content Check Sheet ..... Proposal Content Check Sheet-1

Background

Kentucky Power Company ("KPCO" or "Company") is pursuing additional generation capacity and energy resources via two requests for proposals ("RFPs").

The Company has identified the need for additional resources to serve the future energy and capacity needs of its customers and to maintain compliance with PJM's Capacity Market requirements.

The Company is seeking approximately 800 MW of accredited capacity and the associated energy via the RFP as described in Table 1 below.

TABLE 1

RFP	Details
PSA	RFP seeking one or more PSAs from Kentucky located, PJM interconnected Combined Cycle Natural Gas resources.
PPA	**RFP seeking energy, PJM capacity, and ancillary services via one or more PPAs from Kentucky located Combined Cycle Natural Gas Resources.**

KPCO will evaluate each conforming bid within the RFP individually and collectively, to determine the portfolio of projects that best fits the Company's needs described above while also taking into consideration previous state commission orders.

This RFP document is associated with the PPA RFP only.
The PSA RFP may be found at ***www.kpco.com/rfp***

1. Introduction

KPCO and American Electric Power Service Corporation ("AEPSC") are subsidiaries of American Electric Power Company, Inc. ("AEP").

AEPSC is administering this Request for Proposals (RFP) on behalf of KPCO. Affiliates of AEP and/or KPCO are not permitted to participate in this RFP.

AEP is one of the largest electric utilities in the United States, delivering electricity and custom energy solutions to 5.6 million regulated retail customers in 11 states. AEP owns the nation's largest electricity transmission system, a more than 40,000-mile network that includes more 765-kilovolt extra-high voltage transmission lines than all other U.S. transmission systems combined. AEP also operates 252,000 miles of distribution lines. AEP ranks among the nation's largest generators of electricity, owning approximately 25,400 megawatts of generating capacity in the U.S. Renewables represented 16% of AEP's net generation in 2025. AEP's utility units operate as AEP Ohio, AEP Texas, Appalachian Power (in Virginia and West Virginia), AEP Appalachian Power (in

Tennessee), Indiana Michigan Power, Kentucky Power, Public Service Company of Oklahoma and SWEPCO (in Arkansas, Louisiana, and Texas). AEP's headquarters are located in Columbus, Ohio. More information about AEP can be accessed by visiting www.aep.com.

Kentucky Power Company, headquartered in Ashland, KY, encompasses the AEP service territory in Eastern Kentucky. KPCO serves approximately 162,000 customers. KPCO has 1,235 miles of transmission and 10,115 miles of distribution lines. Additional information regarding KPCO can be accessed by visiting www.kentuckypower.com.

2. RFP Overview

2.1 KPCO is pursuing up to 800 MW of accredited nameplate capacity from Combined Cycle Thermal Resources from this RFP.

2.2 The Resources requested via this RFP will be contracted via PPAs for purchase of the Bundled Products produced by Combined Cycle Natural Gas Resources. The Bundled Products include energy, capacity, and ancillary services, as further described in Section 3.3.

2.3 KPCO may execute one or more PSA(s) as a result of this RFP.

2.4 Any Project(s) which KPCO selects as a result of this RFP will be subject to KPCO's receipt of the necessary regulatory approvals, including regulatory approvals from the Kentucky Public Service Commission (KPSC). Definitive agreements between the Company and Bidders for selected Projects will be conditioned upon the Company receiving the regulatory approvals described in the preceding sentence that are in form and substance satisfactory to the Company in its sole discretion.

2.5 This RFP is not a commitment by the Company to purchase Bundled Products from any Project, and it does not bind or obligate the Company or its Affiliates in any way. The Company, in its sole discretion, will determine which Bidders, if any, it wishes to engage in negotiations with that may lead to definitive PPAs with one or more selected Projects.

2.6 The anticipated time period between the receipt of Proposals and the Company's evaluation, due diligence, selection, negotiation and the execution of definitive agreements is outlined in Section 5.1. The Company anticipates filing for regulatory in Q2-2027 and receiving regulatory decisions by the end of Q1-2028.

2.7 The RFP seeks Proposals for both New and Operational Resources. Any Proposals submitted for Operational Resources must demonstrate that the underlying asset has a minimum amount of operational life remaining based on initial design standards to support the PPA terms detailed in Section 3.5. Additionally, Bidders for Operational Resources must have 100% ownership of the asset or have documented authority to offer the asset into the RFP.

2.8 All questions regarding this RFP should be emailed to: KPCO2026RFP@aep.com. KPCO will post a list of the non-confidential "Questions and Answers" to the RFP website on a weekly basis from the issuance of the RFP until 10 business days prior to the Proposal Due Date.

3. Product Description and Requirements

3.1 Expected Commercial Operation Date (COD): The Company is pursuing Projects that are already in operation or can achieve an Expected COD no later than 3/31/2031.

3.2 Delivery: Each Project is required to be capable of generating and delivering energy into the PJM by the Expected Commercial Operation Date.

3.3 Bundled Products: The Company is seeking to purchase the energy, capacity, and ancillary services, ("Bundled Products") for delivery into PJM with a contract start date for new generation by the Expected COD or stated start date for Operational Resources.

3.4 Target Size: Up to 800 MW of PJM accredited nameplate capacity.

3.5 Minimum Acceptable Project Size at Point of Interconnection: 100 MW.

3.6 Term: The Base Term is 20 years. Bidders may offer Alternate Term Proposals in addition to the Base Proposal.

3.7 Delivery Period: For New Resources, the Delivery Period shall commence on Expected COD and continue for the length of the Term. For Operational Resources, the Delivery Period shall commence between regulatory approval and 3/31/2031 and continue for the length of the Term. Delivery Periods must commence after regulatory approvals described in Section 2.4 are obtained.

3.8 Location: Projects must be physically located in Kentucky, interconnected (via Interconnection Agreement or pseudo-tie) to the PJM Transmission system, and deliverable to the AEP Locational Deliverability Area (LDA).

3.9 Thermal Resource Proposals: For bids submitted under the PPA contract structure in this RFP, Bidders are responsible for securing gas supply to the proposed facilities.

3.10 Project Development:

- Site Control. Bidder must have established substantial site control of the proposed Project. Site control must be in the form of direct ownership, land lease, land lease option or easement for at least the duration of the Term. A letter of intent will not be an acceptable form of demonstrated site control.

3.11 Interconnection (New Resources only):

- Bidder must have a completed PJM System Impact Study which remains active in the PJM Queue.
- Bidders are required to provide the status of the Project's interconnection queue position in submitted bid materials. KPCO requires further updates on the status of the Project's interconnection queue status if new information arises during the RFP process that may impact the delivery timeline or Project costs.
- The Proposal must identify the Project's proposed transmission interconnection point(s) within PJM, including any studies, applications, line extensions and system upgrades identified as part of the interconnection approval process.
- The interconnection point with the PJM transmission system will be the Point of Delivery.
- Bidders are responsible for following the established policies and procedures that are in effect regarding facility interconnection and operation with the interconnecting utility, PJM, and NERC, as applicable.
- The Bidder is responsible for all costs associated with transmission interconnections and system upgrades, including affected system upgrades (if any), as required by the interconnecting utility and PJM, as applicable.
- Bidders seeking to propose a technology that is not currently reflected in their interconnection agreement or interconnection study documentation must clearly describe the timing and process (including reference to the applicable RTO tariff and/or manual) needed to make such a change in fuel type.

4. PPA Bid Price and Structure

4.1 Proposal pricing is for a PPA offtake from a Project that is a complete, commercially operable, and an integrated electric generating plant by the Delivery Start Date.

4.2 Seller shall use Appendix B, and any other attachments as needed to fully articulate the pricing of its Proposal.

4.3 The Bid Price must be for a Bundled Product as described in Section 3.3.

PPA respondents must acknowledge and accept all responsibilities for PJM capacity requirements and penalties.

4.4 Proposals must include a Bid Price for a 20-Year Term. Bidders may include additional Proposals with alternate Terms.

4.5 The following are Bid Price requirements for specific resource types:

Thermal Resource Projects:

- Pricing provided should be fixed (no escalation) for the proposed monthly capacity payment, while pricing for variable O&M should clearly state the assumed annual escalation. For start charges, Bidders must clearly state the proposed pricing structure (e.g., cost for each charge; a certain minimum threshold of charges included in base pricing, with a cost for each charge above the threshold, etc.). For gas charges, Bidders must clearly state their assumption regarding gas supply as well as the various cost components of gas charges, including: transportation fee, management fee, fuel index, and total delivered price formula capturing each of the aforementioned elements (e.g., Heat Rate x (Fuel Index + Transportation + Mgmt Fee). For coal charges, Bidders must clearly state their assumption regarding coal supply as well as the various cost components of coal charges, including: transportation fee, management fee, fuel index, and total delivered price formula capturing each of the aforementioned elements (e.g., Heat Rate x (Fuel Index + Transportation + Mgmt Fee).
- Pricing must include all capital costs, fixed and variable O&M costs, taxes and any other costs associated with delivering the full contracted energy output of the facility to the bid-specified Point of Delivery.

4.6 Proposals that include a buyout option for KPCO to purchase the Resource at the end of or prior to the end of the PPA term and a first right to purchase the Resource should the bidder elect to sell the Resource are preferred.

4.7 All costs associated with transmission interconnection and interconnection facilities required for the Project, including any system upgrades, as required by PJM up to the Point of Delivery, shall be included in the Bidder's pricing where appropriate under current FERC orders and rulings.

4.8 The Bid Price shall include any costs associated with meeting the credit requirements stated in the appropriate Form PPA Term Sheet.

4.9 Associated Attributes. For purposes of this solicitation, the sale of Bundled Products to KPCO under the long term PPA includes the transfer of all energy, capacity, ancillary services (if any), and any other current or future environmental attributes, including any greenhouse gas emission reductions associated with the quantity

contracted from the facility from the project for the term of the PPA.

4.10 Prices must be firm, representing best and final bid. Proposals and bid pricing must be valid for at least 120 days after the Proposal Due Date.

5. RFP Schedule and Proposal Submission

5.1 The schedule and deadlines set out in this section apply to this RFP. KPCO reserves the right to revise this schedule at any time and at its sole discretion.

RFP Timeline	
RFP Issued	8/3/2026
Confidentiality Agreement Request Deadline	8/26/2026
Proposal Due Date	9/2/2026
Short-List Selection	11/18/2026
Execute Definitive Agreements	3/16/2027
File for Regulatory Approvals	3/30/2027
Required Regulatory Approvals	3/30/2028
Notice to Proceed	5/16/2028
Commercial Operation Date	No later than 3/31/2031

5.2 Confidentiality Agreement. Bidders who intend to bid should request a form Confidentiality Agreement ("CA") by submitting a notice of intent via the email address below:

KPCO2026RFP@aep.com.

Bidders should include the project(s) name, agreement type (PSA, PPA) technology, location, size (MW), and PJM Queue number(s) in the notice of intent. Additionally, Bidders should provide site control documentation via email. Bidders will be required to sign a CA prior to receiving the following documents via the RFP SharePoint site:

- Instructions on Proposal submittal through the RFP SharePoint site.
- Form PPA or Term Sheet (Appendix D)
- EnergyInputSheet_2026.xls (Appendix E)
- Thermal Data Review Form_2026 (Appendix F)
- Site, Environmental, and Wildlife Documentation Form (Appendix H)

- Other Non-Price Factor Documentation (Appendix I)

5.3 The Company reserves the right to solicit additional information or Proposals and the right to request additional information from Bidders during the Proposal evaluation process.

5.4 Proposals must be complete in all material respects and be uploaded electronically to the RFP SharePoint site no later than 3:00 p.m. ET on the Proposal Due Date. Proposals should be as comprehensive as possible to enable the Company to make a definitive and final evaluation of the Proposal's benefits to its customers without further contact with the Bidder. Detailed instructions on how to submit Proposals will be provided upon signing a CA.

5.5 Proposals and Bid Pricing must be valid for at least 120 days after the Proposal Due Date at which time Proposals shall expire unless the Bidder has been notified that its Proposal has been included in the Short-List Selection.

6. Proposal Content

Bidders must submit the following information for Proposals. All electronic versions of the Appendices shall be individual files. Proposal content shall be uploaded to the applicable Sharepoint folders and not reference other areas of the proposal even if the information is duplicative.

6.1 A completed Proposal Content Check Sheet.

6.2 A cover letter signed by an authorized representative of the Bidding Company.

6.3 An executive summary of the Project's characteristics and milestone schedule, including any unique aspects and benefits.

6.4 Completed Appendix A (Project Summary) including an electronic Project Summary Form (link to Smartsheet form in the RFP SharePoint) and the following attachments:

- Interconnection Studies: Include a copy of ALL completed interconnection studies (i.e., System Impact Study, Facilities Study, etc.).
- Bidder's Experience: Bidder must provide documentation showing they have substantial experience in operating and maintaining a similar electric generation facilities of an equal or greater MW size in the United States or any portion of Canada within the jurisdiction of NERC, and (ii) meet all applicable requirements under applicable law for operating and maintaining such facilities, including the requirements of an RTO / ISO. A Person will be deemed to have such substantial experience if it is a Person that has at least three (3) years of experience in operating and maintaining electric generation facilities of a similar MW size or greater in the United States or any portion of Canada within the jurisdiction of NERC.

- Site Control Documents: Include a copy of all leases, easements, or other ownership documentation including to the point of interconnection.
- Site Layout: Include a diagram or map identifying the Project boundary with anticipated placement of major equipment and other project facilities, including transmission layouts and point of interconnection. Also, include .KMZ files of the Site Layout that include the proposed site plan, site boundaries, exclusion areas, collection lines, gen-tie, etc.

6.5 A Completed Appendix B (Proposal Bid Pricing). Pricing should be inclusive of all requirements outlined in Section 4 in this RFP as well as the requirements of the Form Agreement.

6.6 A completed Appendix C (Bidder's Credit-Related Information and Bidder Profile) which shall include:

- The identity of all persons and entities that have a direct or indirect ownership interest in the Project.
- Copies of the Annual Reports for the three most recent fiscal years and quarterly reports for the most recent quarter ended, if available.
- At least three third-party references for Projects similar to those sought by the Company in this RFP.

6.7 Provide (i) an affirmative statement that Bidder is taking no exception to the Form PPA or Term Sheet provided pursuant to this RFP; or (ii) a comprehensive list of exceptions to the terms and conditions contained in the applicable Form PPA or Term Sheet (Appendix D).

6.8 A completed Appendix F (Thermal Resource Information) for Thermal Proposals.

6.9 A completed Appendix G (Finance Plan): Bidder shall submit a Finance Plan on a separate form. Bidders must provide a proposed financing plan, including any letters of support, previous correspondence with banks / lenders intending to provide financing for the project. Also provide the proposed on-going debt-equity ratio to be carried by the project during construction and operation.

6.10 A completed Appendix H (Site Details / Environmental / Wildlife Information) including the following attachments:

- Site, Environmental, and Wildlife Review Form.
- Permit Matrix: Attach a comprehensive permit matrix and status of all required permits, including, but not limited to Federal (USFWS, FAA), State, County, City, etc.
- Environmental Report Summary: Summary of all environmental and other reports associated with the site.

6.11 A completed Appendix I (Other Non-Price Factor Documentation Form).

6.12 PPA bids for Operational Resources must also include all the information listed in Appendix J.

7. RFP Proposal Evaluation

Proposals must include all applicable content requirements as described in Section 6. KPCO will consider bids that are reliable, feasible, and represent a reasonable cost means of satisfying the requirements of this RFP. The Evaluation Process, which includes three main steps, is central to the success of KPCO's RFP process.

Section 7.1: Eligibility and Threshold Requirements
Section 7.2: Detailed Analysis (Economic and Non-Price)
Section 7.3: Short-List Selection

7.1 Eligibility and Threshold Requirements: If the Bidder does not qualify under any one of these items, the Bidder will not qualify for this RFP and will be notified accordingly.

- Proposal must be for a PPA (Section 2.2) and include the Bundled Products outlined in Section 3.3.
- New Resources must have an Expected COD by 3/31/2031 (Not applicable to Operational Resources). (Section 3.1)
- Project must have a minimum size of 20 MWac (Section 3.5).
- Projects must be physically located in Kentucky, interconnected (via Interconnection Agreement or pseudo-tie) to the PJM Transmission system and deliverable to the AEP Locational Deliverability Area (LDA). (Section 3.8).
- Bidder must have established Site Control (Section 3.10).
- Bidder must have a completed PJM System Impact Study which remains active in the PJM queue (Section 3.11). (Queue requirement not applicable to Operational Resources)
- Proposals must include a Bid Price for a 15-year Term. Bidders may include Proposals with alternate Terms (Section 4.4).
- The Bid Price must meet all the requirements for the specific resource as outlined in Section 4.5.
- Bidder or its affiliates must have completed the development, engineering, equipment procurement, and construction of a project, within the United States or Canada, of the same technology type, and of a size comparable to that of the Bidder's proposed Project and/or have demonstrated appropriate experience (Section 6.4).
- Bidder's exceptions to the Form PPA or Term Sheet must be complete and, considered individually or in the aggregate, minimally acceptable to the Company as a basis for further discussions. If exceptions are not provided,

the Bidder should include an affirmative acknowledgement that the Form PPA or Term Sheet is acceptable to the Bidder. KPCO reserves the right to disqualify any Bidder that provides an incomplete list of exceptions (for example, by noting that the Bidder's exceptions list has not been reviewed by certain commercial, functional or legal reviewers and may be supplemented with additional exceptions on further review) (Section 6.7).

- Resource Information: Bidder must submit all required Resource Information listed in Appendix E (Renewable) or Appendix F (Thermal) for the proposed resource type (Sections 6.8 & 6.9).
- Bidder is required to include requested financial information (Appendix C) so that AEP's credit department can conduct a financial wherewithal assessment. Bidders are required to verify that any costs associated with meeting the credit requirements are included in the submitted Bid Price (Appendix B).

7.2 Detailed Analysis: Proposals meeting the Eligibility and Threshold Requirements in Section 7.1 will move to the Detailed Analysis phase which is comprised of the Economic Analysis and the Non-Price Factor Analysis set forth below. The Economic Analysis will constitute 60% and the Non-Price Factor Analysis will constitute 40% of the overall evaluated value of each Proposal in the Short-List Selection process.

Economic Analysis (60%): The Economic Analysis will constitute 60% of the overall evaluated value of each Proposal The Economic Analysis will include the calculation of three financial metrics which will provide multiple perspectives on cost and value, including:

- Levelized Adjusted Net Cost of Energy (LANCOE),
- Levelized Adjusted Net Cost of Capacity (LANCOC), and
- Value to Cost (V/C) Ratio.

V/C Ratio will be the primary ranking metric for comparing across different generation types.

. Additional details of the three financial metrics described above are as follows:

$$\text{LANCOE (\$/MWh)} = \frac{\text{Net Present Value of: Total Cost (\$) – Total Value (\$)}}{\text{Present Value of Projected Energy Production (MWh)}}$$

$$\text{LANCOC (\$/MW-Day)} = \frac{\text{Net Present Value of: Total Cost (\$) – Total Value (\$)}}{\text{Present Value of Projected PJM Capacity (MW)}}$$

$$\text{V/C Ratio} = \frac{\text{Present Value of Total Value}}{}$$

Present Value of Total Cost

Definitions

Total Cost: The Company will determine the present value of the costs of each qualifying Proposal. For PPA bids, Total Costs will be evaluated based on the contract's demand charges, energy charges, and any other applicable charges. Other costs may be included based on the Company's discretion to appropriately evaluate each Proposal to ensure the Company is comparing all qualifying Proposals on an equivalent basis.

Total Value: The Company will determine the present value of all the value streams of each qualifying Proposal. The value streams include the expected PJM revenues for the Proposal's energy and ancillary services, the expected value of renewable energy certificates (RECs), capacity value, and any applicable terminal value. Additionally, other value streams and financial metrics may be included based on the Company's discretion to appropriately evaluate each Proposal to ensure the Company is comparing all qualifying Proposals on an equivalent basis.

Transmission and Congestion Costs: Transmission and Congestion Costs will be determined by the Company's transmission screening analysis. The transmission screening analysis will evaluate (i) transmission facilities cost and the network upgrade cost allocated to the Proposal, (ii) expected cost of transmission congestion and losses to the KPCO's PJM load zone and (iii) cost of deliverability/curtailment risk mitigation that the Company calculates to ensure that the resources can be designated as firm resources to meet Company's capacity obligations. Transmission and Congestion Costs will be included in Total Cost calculations.

Projected Energy Production*:* An energy production forecast in MWh will be utilized to evaluate each Proposal and any expected production curtailments based on the transmission screening analysis will be deducted from the projected energy.

PJM Capacity: PJM Accredited Capacity shall be computed by adjusting a qualifying Proposal's applicable nameplate or contracted capacity by the forecasted adjustments that are used, or are expected to be used, by the PJM RTO to determine the number of MW that the Company will be credited for use in meeting applicable capacity obligations. These adjustments will include, but are not limited to, summer and winter Effective Load Carrying Capability (ELCC) adjustments and seasonal outage rate adjustments.

Non-Price Analysis: The Non-Price Analysis will constitute 40% of the overall evaluated value of each Proposal. KPCO will consider applicable risks

and factors that are not already captured in the economic analysis, including service reliability-related factors. These include, but not limited to, the following four categories:

Category A: Location & Local Benefits

Project Location
The Company will evaluate the location of a project and preference will be given to projects interconnected on KPCO wires. Projects interconnected on KPCO's system provided enhance the Company's ability to reliably serve its customers.

Local Economic Impacts & Benefits
This factor will include a review of the following: 1) the economic benefits to local governments and businesses as well as local property and sales tax benefits, 2) use of contractors based in Arkansas, Louisiana, or Texas, 3) known current or historical community support or opposition for the Projects, and 4) the Bidder's plan for managing community relations.

Environmental Impact and Community Engagement
Bidders should provide the status of a Project stakeholder engagement plan to address environmental impact, how communities or organizations will have an opportunity to participate in decisions about activities that may affect their environment and/or health, how their concerns will be considered in the decision-making process and how these communities are involved in workforce opportunities associated with the Project.

Bidders should summarize expected impacts on the local economy, which may include factors such as job creation for the KPCO customer base, use of local materials, tax benefits, or other benefits accruing to its customers.

Category B: Dispatchability & Flexibility

Projects which can reliability produce energy when called upon enhance the Company's ability to reliably serve its customers. Dispatchability consists of several components, which will be evaluated collectively.

Dispatch Capability
The resource's ability to be dispatched to its maximum capacity on demand.

Dispatch Range
Difference between unit's economic minimum and summer maximum capability.

Ramp Rates
The MW/Minute increase or decrease of a unit being offered for economic dispatch.

Max Operational Hours
The maximum number of hours a generating unit can run at its full capability over the course of an operating day.

Minimum Run Time
The minimum number of hours a unit must run, in real-time operations, from the time after generator breaker closure, which is typically indicated by telemetered or aggregated State Estimator megawatts greater than zero, to the time of generator breaker opening.

Minimum Down Time
The minimum number of hours under normal operating conditions between unit shutdown and unit startup, calculated as the shortest time difference between the unit's generator breaker opening and after the unit's generator breaker closure.

Ancillary Service Potential
Assessment of ability of the unit to provide the various ancillary services available in the PJM market.

Fuel Supply
Assessment of fuel supply considerations for thermal resources.

Category C: Technology Risks and Benefits

Assessment of systemic risks and benefits of each technology type, including but not limited to:

Environmental Regulatory Risk
Exposure, or lack of exposure, to potential costs of compliance with environmental regulations.

Fuel/Charging Cost Risk
Exposure, or lack of exposure, to risks associated with variable energy production costs.

Energy Production Benefits
Energy market risk mitigation benefit associated with energy production, as measured by expected capacity factor.

Category D: Proposal Risk and Project Quality

Contract Exceptions
The Company will review all Bidder-proposed Form PPA exceptions with a focus on minimizing added risks or costs to the Company. Prior acceptance of similar exceptions in past negotiations will not guarantee acceptance. The Company will

also assess overall commercial risk, including exposures created by proposed terms and any uncertainties that could affect financial or operational outcomes.

Asset-Specific Benefits & Risks
The Company will review the extent to which the Proposal provides additional flexibility or exposes the Company and its customers to higher than Projected market prices and volatility due to the timing, the term length of a contract, or the finite life of an asset.

Developer Experience & Financial Wherewithal
The Company will evaluate the Bidder's project experience, safety record, any material legal proceedings, and overall financial strength, including creditworthiness and ability to provide acceptable collateral. This review will consider prior project performance, financial statements, credit ratings, and proposed collateral forms such as letters of credit and parent guarantees.

Project Finance Plan
The Company will evaluate the Project's financing plan, including the Bidder's ability to secure funding through all phases of development and construction. The plan should clearly outline financing sources and mechanisms, along with estimated construction and financing costs.

Interconnection Status
The Company will assess the proposed Project's planned interconnection arrangements with a focus on completeness of the Generation Interconnection process as prescribed by PJM as well as the scope, schedule, and estimated deliverability of the prospective Project, including the potential impacts on the ability of the Project to meet its proposed COD date.

Site Control
The Company will review the status of real property acquisition/site control progress and land use permitting and zoning.

Permitting, Studies & Zoning (local, federal, environmental, wildlife)
The Company will review all Bidder provided environmental documents and reports for the Project, including those related to environmental, operations and maintenance facilities, and other infrastructure. This includes materials such as permit matrices, plans, wetland delineations, cultural and historical studies, wildlife and habitat assessments, agency coordination, Phase I ESAs, siting studies, and any other relevant environmental documentation. The Company will assess the Bidder's compliance with all applicable federal, state, and local environmental regulations and incorporate this into the non-price factor score.

Project Timing
The review will evaluate potential risks, such as schedule delays or equipment supply issues, that could impact achieving the targeted COD, as well as the desirability of the COD.

7.3 Short-List Selection: KPCO will consider bids that are feasible and represent a reasonable cost means of satisfying the requirements of this RFP. Based on the results of the Detailed Analysis described above in Section 7.2, the Company will determine which Projects will be included in the Short-List Selection while also taking into consideration previous state commission orders in each of KPCO's jurisdictions. The Company will notify Bidders whether or not their Proposal has been selected and negotiation of definitive agreements will commence with Bidders whose Proposals have been selected.

Shortlisted bidders are not guaranteed award of a contract. An awarded PPA is subject to final negotiations of a definitive agreement. KPCO anticipates that fewer contracts will be executed than the number of Shortlisted bids.

KPCO reserves the right to disqualify any Shortlisted Bidder that provides a marked Form PPA or Term Sheet that materially departs from their previously submitted exceptions list (see Section 7.1).

8. Reservation of Rights

A Proposal will be deemed accepted only when the Company and the successful Bidder have executed a definitive Power Purchase Agreement. The Company has no obligation to accept any Proposal, whether or not the stated price in such Proposal is the lowest price offered, and the Company may reject any Proposal in its sole discretion and without any obligation to disclose the reason or reasons for rejection.

By participating in the RFP process, each bidder agrees that any and all information furnished by or on behalf of the Company in connection with the RFP is provided without any representation or warranty, express or implied, as to the usefulness, accuracy, or completeness of such information, and neither the Company nor its Affiliates nor any of their personnel or representatives shall have any liability to any bidder or its personnel or representatives relating to or arising from the use of or reliance upon any such information or any errors or omissions therein.

The Company reserves the right to modify or withdraw this RFP, to negotiate with any and all qualified Bidders to resolve any and all technical or contractual issues, or to reject any or all Proposals and to terminate negotiations with any Bidder at any time in its sole discretion. The Company reserves the right, at any time and from time to time, without prior notice and without specifying any reason and, in its sole discretion, to (a) cancel,

modify or withdraw this RFP, reject any and all Proposals, and terminate negotiations at any time during the RFP process; (b) discuss with a Bidder and its advisors the terms of any Proposal and obtain clarification from the Bidder and its advisors concerning the Proposal; (c) consider all Proposals to be the property of the Company, subject to the provisions of this RFP relating to confidentiality and any confidentiality agreement executed in connection with this RFP, and destroy or archive any information or materials developed by or submitted to the Company in this RFP; (d) request from a Bidder information that is not explicitly detailed in this RFP, but which may be useful for evaluation of that Bidder's Proposal; (e) determine which Proposals to accept, favor, pursue or reject; (f) reject any Proposals that are not complete or contain irregularities, or waive irregularities in any Proposal that is submitted; (g) accept Proposals that do not provide the lowest evaluated cost; (h) determine which Bidders are allowed to participate in the RFP, including disqualifying a Bidder due to a change in the qualifications of the Bidder or in the event that the Company determines that the Bidder's participation in the RFP has failed to conform to the requirements of the RFP; (i) conduct negotiations with any or all Bidders or other persons or with no Bidders or other persons; (j) execute one or more definitive agreements with any Bidder, and (k) utilize a Bidder's completed Appendices and any supplemental information submitted by the Bidder in any of its regulatory filings.

9. Confidentiality

KPCO will take reasonable precautions and use reasonable efforts to maintain the confidentiality of all bids submitted. Bidders should clearly identify each page of information considered to be confidential or proprietary. KPCO reserves the right to release any Proposals to agents or consultants for purposes of Proposal evaluation. KPCO disclosure policies and standards will automatically bind such agents or consultants. Regardless of confidentiality, all such information may be subject to review by or in proceedings before the appropriate state authority, or any other governmental authority or judicial body with jurisdiction relating to these matters and may be subject to legal discovery. Under such circumstances, KPCO and AEPSC will make reasonable efforts to protect Bidder's confidential information.

10. Bidder's Responsibilities

10.1 It is the Bidder's responsibility to submit all requested material by the deadlines specified in this RFP.

10.2 The Bidder should make its Proposal as comprehensive as possible so that KPCO may make a definitive and final evaluation of the Proposal's benefits to its customers without further contact with the Bidder.

10.3 Bidders are responsible for the timely completion of the project and are required to submit proof of their financial and technical wherewithal to ensure the successful completion of the project.

10.4 The Bidder will be responsible for any expenses Bidder incurs in connection with the preparation and submission of a Proposal and/or any subsequent negotiations regarding a Proposal in response to this RFP. KPCO will not reimburse Bidders for their expenses under any circumstances, regardless of whether the RFP process proceeds to a successful conclusion or is abandoned by KPCO at its sole discretion.

11. Contacts

11.1 General RFP Questions: All correspondence and questions, with the exception of interconnection related questions, regarding this RFP should be directed to:

KPCO2026RFP@aep.com

Appendices

Appendix A (PPA)

Project Summary

Company Information

Bidder (Company):		
Contact Name:		
Contact Title:		
Address:		
City:	State:	Zip Code:
Work Phone:	Cell Phone:	
Email Address:		
Is the Proposal being submitted through a partnership, joint venture, consortium, or other association? (Y/N) _____ If so, please identify all partners, joint ventures, members, or other entities or persons comprising same:		
Additional company information to be provided in Appendix C – Bidder's Credit-Related Information and Profile		

General Project Information

Project Name:	
Resource Type: New or Operational?	
Project site located (County, State):	
PJM Queue #:	
Expected Commercial Operation Date:	
Percentage of Federal Tax Credit that the Project will quality for:	%
Strategy for qualifying for PTC/ITC:	
Design Life (Years); if an Operational Resource, also include estimated remaining useful life:	
Bidder confirms that it has substantial Project site control	(Y/N):
Is the Proposal for 100% of the asset? (Y/N) If No, what percentage?	%

Thermal Project Information

	Fuel Type (Primary / Secondary):		
Project Capacity Values, MWac	Nameplate Rating	Winter Rating	Summer Rating

Interconnection (PJM)

PJM Queue #:	Substation Name / Voltage:
Feasibility Study Complete (Y/N):	Feasibility Study Report Date:
System Impact Study Complete (Y/N):	System Impact Study Report Date:
Facilities Study Complete (Y/N):	Anticipated Facilities Study Completion Date:
Total Network Upgrade Costs (including Affected System Network Upgrade Costs) Allocated to Project from System Impact Study or Facilities Study if completed:	$
Total Direct Interconnection costs from System Impact Study or Facilities Study if completed:	$
Point of Interconnection with:	
Types of transmission service (NRIS, ERIS)	
PJM Interconnection Status including description of any communication with PJM.	
Please attach a copy of all interconnection studies and/or the expected completion date(s).	

Site

Address:		
City:	State:	Zip Code:
County	Longitude:	Latitude:
Site Control (lease, own, site purchase pending, etc.):		
Site Acres Required:	Site Acres Secured (as % of Req.):	
Is there potential for expansion (Y / N):		If Yes, acres available:
Have you contacted all required permitting agencies regarding this project and identified all necessary permits?		

Permits	
Local (County, City, etc.) (Y / N):	
State (Y / N):	
Federal (Y / N):	
Wildlife Resources (Federal, State, etc.) (Y / N):	
Other (Y / N):	

What is the current status of Bidder's FAA permitting process? Has the project been issued Determination of No Hazard? (For the entire project? For a portion of the project? If so, when is the expiration date?)	
How many acres of forest need to be cleared to accommodate the development of the Project?	
Additional Site information and Form to be provided in Appendix H – Site, Environmental, and Wildlife Information.	

Projects Completed of the Same Technology Type

Provide a summary of all projects of comparable size that Bidder has successfully developed and completed in the United States or Canada. For each project, describe the Bidder's specific role in the project (provide in a separate attachment, if necessary).

Project	Location	MWac	Bidder's Role
	Total MWac =		

Appendix B

PPA Proposal Bid Pricing

Project Name:	
Developer:	
Resource Type:	
Is Project "New" or "Operational"	
Does the Bid Price include all costs necessary to meet the credit requirements outlined in Appendix D (Y/N)?	
Does pricing include provisions listed in the form PPA?	

Thermal Resource Base Proposal				
Expected COD by	**PPA Term and Expected Annual Energy**	**Capacity Payment ($/kW-month)**	**Non-Fuel Variable O&M Charge**	**Start Charges**
				$
Bidders are encouraged to submit multiple Proposals with different size (MW) tranches from each natural gas Project facility (if feasible) in order to provide the Company with sizing options.				
Fuel Charge Information				
Please provide the applicable Platts Gas Daily index (and a typical market adder or discount) that is used to calculate the gas price, which is then used to determine the offer price of the unit to the RTO (Example: Enable Gas, East + $0.10 per MMBtu).				
Please provide the equation used to calculate the Daily Gas Price; include any applicable variable costs that are used in the development of the unit offer. Example (for simplicity, assume that the commodity price is $3.00 per MMBtu): Commodity Price: $3.00 per MMBtu; Retainage: 2.132%; PAL/Overrun: $0.3708 per MMBtu; FERC ACA: $0.0014 per MMBtu ($3.00 per MMBtu / (1-0.02132)) +$0.3708 per MMBtu + $0.0014 per MMBtu) = $3.44 per MMBtu				
Please provide detailed line-item list of the non-fuel O&M charges and any other charges that would be billed for the operation of the plant.				

Are there any fixed transportation charges (Yes/No)? If Yes, are they included in the Fixed Capacity Payment above?
Are there any other fixed charges (Yes/No)? If Yes, are they included in the Fixed Capacity Payment above?

Alternate Thermal Resource Proposal (Not Required)				
Expected COD by	**PPA Term and Expected Annual Energy**	**Capacity Payment ($/kW-month)**	**Non-Fuel Variable O&M Charge**	**Start Charges**
				$

Appendix C

Bidder's Credit-Related Information

Full Legal Name of the Bidder:	
Type of Organization (Corporation, Partnership, etc.):	
Bidder's % Ownership in Proposed Project:	
Proposed Agreement (PSA/PPA):	
Full Legal Name(s) of Parent Corporation(s) (Up to Ultimate Parent):	1. 2. 3. 4.
Entity Providing Credit Support on Behalf of Bidder (if applicable) – if left blank, creditworthiness will be evaluated based on the Bidder:	Name: Address: City: Zip Code: Relationship to Bidder (If applicable):
Type of Security:	☐ Check box if proposed credit support provided is Cash/LOC ☐ Check box if proposed credit support provided is a Non-Investment Grade Guaranty ☐ Check box if proposed credit support provided is an Investment Grade Guaranty
Current Senior Unsecured Debt Rating of Credit Support Provider:	S&P (Standard and Poor's): Moody's:
Bank References & Name of Institution:	

Bank Contact:	Name: Title: Address: City: Zip Code: Phone Number:
Legal Proceedings: As a separate attachment, please list all lawsuits, regulatory proceedings, or arbitration in which the Bidder or its affiliates or predecessors have been or are engaged that could affect the Bidder's performance of its bid. Identify the parties involved in such lawsuits, proceedings, or arbitration, and the final resolution or present status of such matters.	
Financial Statements: Please provide for Credit Support Provider, copies of the Annual Reports for the three most recent fiscal years and quarterly reports for the most recent quarter ended, if available. If available electronically, please provide link.	
Ability to Post Collateral and Raise Capital: Please provide a narrative describing the Bidders' ability and plan to both post collateral and raise capital to facilitate the development and construction of the project.	
If known, Full Legal Name of EPC Contractor(s):	Name: Address: City: Zip Code: ☐ Check box if proposed warranty period will have credit support provided as Cash/LOC ☐ Check box if proposed warranty period will have credit support provided as a Guaranty If Guaranty, which entity will supply?:

Bidder Profile

Please list Bidder's Affiliate companies: 1. 2. 3. 4.
Please identify all persons and entities that have a direct or indirect ownership interest in the Project
Please attach a summary of Bidder's background and experience in the development of projects of the same technology as the proposed project.
References 1. Company a. Contact Name: b. Contact Number: c. Project: 2. Company a. Contact Name: b. Contact Number: c. Project: 3. Company a. Contact Name: b. Contact Number: c. Project: 4. Company a. Contact Name: b. Contact Number: c. Project:

Appendix D

Form PPA and Term Sheet

See Section 5.3 for instructions to obtain the resource specific Form PPA or Term Sheet

Appendix E

(Intentionally Left Blank)

Appendix F

Thermal Resource Information

See Sections 5.3 for instructions to obtain document identified below:

1. Bidder must populate the data required in the Company's following document:

    - Thermal Data Review Form_2026 to include Bidder's planned interconnections to mainline natural gas pipeline infrastructure.

Appendix G

Financing Plan

Bidder to include a description of its financing plan.

Appendix H

Site Details / Environmental / Wildlife

1. Bidder must populate the data required in the Company's "Site Environmental Wildlife Review Form" document (*See Sections 5.3 for instructions to obtain*).

2. Bidder must include the following attachments (referenced to Appendix O)
   a. Site Layout: Provide a diagram or map identifying boundaries, anticipated placement of major equipment and other project facilities, including project gen-tie line, point of interconnection, and project access roads.
   b. Project boundary (.kmz (preferred) or shape files *and* a pdf on USGS topographic map).
   c. Permit Matrix: List and describe all city, county, state and federal permits required for this project. Include: status, duration, planned steps, any known mitigation requirements, critical milestones, and timelines.
   d. Environmental Report Summary: The initial Proposals shall include a summary of all environmental studies, reports and agency meetings associated with the Project. (See below for potential reports to summarize, include data summaries, results and findings)
   e. Site Control: Verify site control and reference documentation is provided under Appendix M.

3. Please attach any reports and spatial files providing environmental information specific to the project, including but not limited to, the following reports as available:
   a. Critical Issues Analysis
   b. Tier I / II Site Characterization Report
   c. Environmental Work / Survey Plan
   d. Bat Acoustic Survey Report
   e. Species presence/absence survey report
   f. Avian Use Survey Report
   g. Raptor Nest Survey Report
   h. Prey-base Survey Report
   i. Eagle Risk Assessment Report
   j. Wetland, Waters and Playa Survey / Assessment Report
   k. Whooping Crane Habitat Assessment Report
   l. Lesser Prairie Chicken Survey / Assessment Report
   m. Phase I Environmental Site Assessment Report
   n. Historical and Cultural Resource Survey / Assessment Report
   o. All Other Species and Environmental Resource Survey and Study Reports
   p. Record and Notes of all Federal or State Resource Agency Correspondence and Meetings
   q. Associated Project Infrastructure and Environmental Resource Shapefiles (.kmz format)
   r. Aviation / FAA Studies
   s. Department of Defense Siting Clearinghouse reviews and recommendations

t. Radar Study
u. Noise and Shadow Flicker Study
v. Bird and Bat Conservation Strategy and Eagle Conservation Plan (if available).

Appendix I

Other Non-Price Factor Documentation

See Sections 5.3 for instructions to obtain any of the forms identified below:

1. Bidder must populate the data required in the Company's "Other Non-Price Factor Documentation Form."

Appendix J

Operational Resource Information

In addition to the other appendices, Operational Resources are required to upload all of the historical Operational Resource information listed below into the Appendix J SharePoint folder:

Operational Resources

Historical operational information over the last 5 years (or less if commercial operation was more recent), including:

- Production data (8760) and availability as well as downtime issues and outlook
- Congestion and curtailment
  - Environmental, Safety issues and violations
  - NERC violations and resolution
  - Major scheduled and unscheduled maintenance matters as well as resolution
  - Community relations / external affairs issues
  - Detailed annual operations budgets, including forecasted v. actual
- Environmental and permitting summary
- List and description of any outstanding legal matters
- Facility Site Plan and General Arrangement
- List of all warranties
- Staffing
- Summary of material contracts (interconnection agreement, operations & maintenance agreements, etc.) and confirmation that the project is in compliance with all such contracts, including land leases
- Confirmation of whether the project holds firm transmission service and, if applicable, gas transportation capacity and gas supply
- Property tax abatements and/or payments in lieu of taxes
- Commercial operation date

Repower Projects

In addition to the Operational Resource requirements above, include detailed information regarding the repower plan, including detailed scope, schedule, any IE Reports, future major maintenance, warranties of replaced equipment. In addition, populate and update below table.

Component	Replace		Reuse	
	Yes / No	Useful Life	Yes / No	Remaining Life
Nacelle				
Rotor				
Blade				
Hub				
Variable Pitch System				
Bearing & Main Shaft				
Gearbox & Oil Cooler				
Generator				
Towers				
Foundation				
[Other]				

SOUTHWESTERN ELECTRIC POWER COMPANY
An AEP Company

PPA Proposal Content Check Sheet

Item	Mark Complete and Included "X"
Cover Letter	
Executive Summary	
Appendix A (Project Summary)	
▪ Completed Electronic Summary Form (Link in SharePoint Site)	
▪ Interconnection Studies	
▪ Site Control Documents	
▪ Site Layout .kmz File	
Appendix B (Bid Pricing)	
Appendix C (Bidder's Credit Information)	
▪ Company Financials	
Appendix D (Exceptions to Form PPA/Term Sheet or affirmative acknowledgement that the Form PPA or Term Sheet is acceptable to the Bidder)	
Appendix E (Intentionally Left Blank)	
▪ Appendix F (Thermal Resource Information), if applicable	
Thermal Data Review Form_2026	
▪ Appendix G (Financing Plan)	
Appendix H (Site / Environmental / Wildlife)	
Site_Environmental_Wildlife Review Form	
▪ Site Layout	
▪ Site Boundary	
▪ Permit Matrix	
▪ Environmental Report Summary	
▪ Appendix I (Other Non-Price Factor Documentation)	
Other Non-Price Factor Documentation Form	
▪ Appendix J (Operational Resources Information)	

Please provide an explanation/reason below for any information not checked off and included in the Proposal:

EXHIBIT AJE-8

2026 Purchase Sale Agreement Request for Proposal

DRAFT

American Electric Power Service Corporation
as agent for
Kentucky Power Company

Request for Proposals
Purchase and Sale Agreements (PSAs)

from Qualified Bidders
for

<u>New</u> Resources

Kentucky Power Company is seeking Combined Cycle Natural Gas resources via RFP totaling:

800 MW of Accredited Nameplate Capacity.

<u>This RFP is associated with PSAs only.</u>
Other RFPs may be found at the Web Address noted below.

The Resources requested in this RFP will be acquired via Purchase and Sale Agreements (PSA) for purchase of 100% of the equity interest of the Project's limited liability company (Project LLC).

RFP Issued: August 3, 2026
Proposals Due: September 2, 2026

Web Address: www.kentuckypower.com/rfp

Table of Contents

Background 1
1. Introduction 1
2. RFP Overview 2
3. Product Description and Requirements 3
4. PSA Bid Price and Structure 4
5. RFP Schedule and Proposal Submission 6
6. Proposal Content 7
7. Proposal Evaluation 10
8. Reservation of Rights 17
9. Confidentiality 18
10. Bidder's Responsibilities 18
11. Contacts 19

Appendices

Project Summary ..... A
PSA Proposal Bid Pricing ..... B
Bidder's Credit-Related Information C
Form Term Sheet ..... D
INTENTIONALLY LEFT BLANK ..... E
AEP Generation Facility Standards ..... F
AEP Requirements for Connection of Facilities ..... G
INTENTIONALLY LEFT BLANK ..... H
INTENTIONALLY LEFT BLANK I
INTENTIONALLY LEFT BLANK ..... J
Natural Gas Resource Information ..... K
Financing Plan L
Project Land Lease Costs / Decommissioning Costs / Property Taxes ..... M
Project Technical Due Diligence Material ..... N
Site / Environmental / Wildlife Information ..... O
Other Non-Price Factor Documentation ..... P
INTENTIONALLY LEFT BLANK ..... Q
Operational Resource Information ..... R
INTENTIONALLY LEFT BLANK ..... S
Proposal Content Check Sheet ..... Proposal Content Check Sheet

Background

Kentucky Power Company ("KPCO" or "Company") is pursuing additional generation capacity and energy resources via two requests for proposals ("RFPs").

The Company has identified the need for additional resources to serve the future energy and capacity needs of its customers and to maintain compliance with PJM's Capacity Market requirements.

The Company is seeking approximately 800 MW of accredited capacity and the associated energy via the RFP as described in Table 1 below.

TABLE 1

RFP	Details
PSA	**RFP seeking one or more PSAs from Kentucky located, PJM interconnected Combined Cycle Natural Gas resources.**
PPA	RFP seeking energy, PJM capacity, and ancillary services via one or more PPAs from Kentucky located Combined Cycle Natural Gas Resources.

KPCO will evaluate each conforming bid within the RFP individually and collectively, to determine the portfolio of projects that best fits the Company's needs described above while also taking into consideration previous state commission orders.

This RFP document is associated with the PSA RFP only.
The PPA RFP may be found at ***www.kpco.com/rfp***

1. Introduction

KPCO and American Electric Power Service Corporation ("AEPSC") are subsidiaries of American Electric Power Company, Inc. ("AEP").

AEPSC is administering this Request for Proposals (RFP) on behalf of KPCO. Affiliates of AEP and/or KPCO are not permitted to participate in this RFP.

AEP is one of the largest electric utilities in the United States, delivering electricity and custom energy solutions to 5.6 million regulated retail customers in 11 states. AEP owns the nation's largest electricity transmission system, a more than 40,000-mile network that includes more 765-kilovolt extra-high voltage transmission lines than all other U.S. transmission systems combined. AEP also operates 252,000 miles of distribution lines. AEP ranks among the nation's largest generators of electricity, owning approximately 25,400 megawatts of generating capacity in the U.S. Renewables represented 16% of

AEP's net generation in 2025. AEP's utility units operate as AEP Ohio, AEP Texas, Appalachian Power (in Virginia and West Virginia), AEP Appalachian Power (in Tennessee), Indiana Michigan Power, Kentucky Power, Public Service Company of Oklahoma and SWEPCO (in Arkansas, Louisiana, and Texas). AEP's headquarters are located in Columbus, Ohio. More information about AEP can be accessed by visiting www.aep.com.

Kentucky Power Company, headquartered in Ashland, KY, encompasses the AEP service territory in Eastern Kentucky. KPCO serves approximately 162,000 customers. KPCO has 1,235 miles of transmission and 10,115 miles of distribution lines. Additional information regarding KPCO can be accessed by visiting www.kentuckypower.com.

2. RFP Overview

2.1 KPCO is pursuing up to 800 MW of accredited nameplate capacity from A Combined Cycle Thermal Resource from this RFP.

2.2 The Resources requested via this RFP will be acquired via PSAs for purchase of 100% of the equity interest of the Project's limited liability company (Project's LLC). New PSA Resources will be acquired on or about Substantial Completion for Natural Gas.

2.3 KPCO may execute one or more PSA(s) as a result of this RFP.

2.4 Any Project(s) which KPCO selects as a result of this RFP will be subject to KPCO's receipt of the necessary regulatory approvals, including regulatory approvals from the Kentucky Public Service Commission (KPSC). Definitive agreements between the Company and Bidders for selected Projects will be conditioned upon the Company receiving the regulatory approvals described in the preceding sentence that are in form and substance satisfactory to the Company in its sole discretion.

2.5 This RFP is not a commitment by the Company to acquire any Project, and it does not bind or obligate the Company or its Affiliates in any way. The Company, in its sole discretion, will determine which Bidders, if any, it wishes to engage in negotiations with that may lead to definitive PSAs with one or more selected Projects.

2.6 The anticipated time period between the receipt of Proposals and the Company's evaluation, due diligence, selection, negotiation and the execution of definitive agreements is outlined in Section 5.1. The Company anticipates filing for regulatory approval in Q2-2027 and receiving regulatory decisions by the end of Q1-2028.

2.7 Upon obtaining regulatory approvals and the parties satisfying other required conditions for the PSA Projects selected by the Company as described in Section 2.4, the Company will issue a Notice to Proceed ("NTP") for the selected Bidders to proceed with the construction of selected Projects. The Form PSA Term Sheet (Appendix D) contains additional information regarding the conditions and timing for NTP issuance. The

Company may issue NTPs for selected Projects that it prefers over other selected Projects if some, but not all, approvals are received.

2.8 This RFP seeks Proposals for New Combined Cycle Natural Gas Resources.

2.9 All questions regarding this RFP should be emailed to: KPCO2026RFP@aep.com. KPCO will post a list of the non-confidential "Questions and Answers" to the RFP website on a weekly basis from issuance of the RFP until 10 business days prior to the Proposal Due Date.

3. Product Description and Requirements

3.1 Delivery: Each Project is required to be capable of generating and delivering energy into the PJM by the Expected Commercial Operation Date.

3.2 Expected Commercial Operation Date (COD): The Company is pursuing Projects that can achieve COD no later than 3/31/2031.

3.3 Target Size: Up to 800 MW of accredited nameplate capacity.

3.4 Minimum Acceptable Project Size at Point of Interconnection:

Natural Gas: 100 MWac

3.5 Location: Projects must be physically located in Kentucky, interconnected (via Interconnection Agreement or pseudo-tie) to the PJM Transmission system, and deliverable to the AEP Locational Deliverability Area (LDA).

3.6 Project Development: Each new Project must satisfy the requirements of the applicable AEP Generation Facility Standard (Appendix F), which includes at a minimum:

3.6.1 Natural Gas Projects:

- Natural Gas Projects must satisfy the AEP Generic Gas Generation Technical Specifications for Combustion Turbines. The Company has a preference for Projects that have space allocation for future hydrogen and/or carbon capture in their design.

3.7 Site Control: Bidder must have established substantial site control of any Project. Site control must be in the form of direct ownership, land lease, land lease option or easement for at least 35 years. A letter of intent will not be an acceptable form of demonstrated site control. The project company is required to acquire fee ownership of the property used to site the operations and maintenance ("O&M") building and project substation.

3.8 Resource Analysis: Each project must provide a robust resource analysis as follows:

- Natural Gas: Natural Gas Projects are required to submit all Natural Gas Resource Information and Unit Cost Transportation Forms (Appendix K). For bids submitted under the PSA contract structure in this RFP, KPCO will be responsible for securing the gas transportation infrastructure and any associated long-term transportation agreement for new gas facilities proposed. Bidders should provide evaluation(s) of potential interconnections to mainline natural gas pipeline infrastructure.

3.9 Minimum Design Life: 30 years

3.10 Interconnection/Delivery Point:

3.10.1 Bidder must have a completed PJM System Impact Study which remains active in the PJM Queue.

3.10.2 Bidders are required to provide the current status of the Project's interconnection queue position in submitted bid materials. KPCO requires further updates on the status of the Project's interconnection queue position if new information arises during the RFP process that may impact the delivery timeline or costs of the project (through either direct coordination with the RTO or as a result of new regulation, guidance, or policy changes).

3.10.3 The interconnection point with the PJM transmission system will be the Point of Delivery.

3.10.4 Bidders are responsible for following the established policies and procedures that are in effect regarding facility interconnection and operation with the interconnecting utility and PJM, as applicable.

3.10.5 The Bidder is responsible for all costs associated with transmission interconnections and system upgrades, including affected system upgrades (if any), as required by the interconnecting utility or PJM, as applicable.

4. PSA Bid Price and Structure

4.1 Proposal pricing must be for the Company's acquisition of a turnkey Project that is a complete, commercially operable, and integrated Natural gas Combined Cycle electric generating plant.

4.2 Seller shall use Appendix B, and any other attachments as needed to fully articulate the pricing of its Proposal.

4.3 The PSA will be for the purchase of 100% of the equity interest of the Project LLC at the completion and commissioning. Payment by KPCO to the Bidder will be at or near

the Commercial Operation Date (COD). The Company will not make any progress payments.

4.4 The following sub-sections are specific Bid Price requirements.

4.4.1 Natural Gas Projects:

Natural Gas Projects must be designed for a minimum 30-year life. Pricing for Natural Gas Projects must include, but not be limited to, combustion OEM turbines/Gen Sets, O&M facilities, project substation, generation-tie line, SCADA, IT, and all facilities required to deliver energy into PJM.

4.5 In addition to Sections 4.1 – 4.4 above, Proposal pricing must include the costs associated with the following:

4.5.1 Costs associated with ALTA/title insurance and construction financing.

4.5.2 A minimum of two-year comprehensive warranty provided by a creditworthy entity for all equipment, including design, labor and materials, and fitness for purpose, with coverage extending two years beyond COD.

4.5.3 Post-commercial operation testing activities and associated costs, including the installation.

4.5.4 Transmission and interconnection facilities required for the Project, including a detailed list of system or network upgrades, as required by PJM, including any affected system upgrades.

4.5.5 All costs associated with the development, design, engineering, procurement, construction, commissioning and applicable testing and start-up of the facility.

4.5.6 Transfer of all property rights and/or any land lease(s)/easements. The O&M facility and project substation must be hosted on land that is owned and not leased.

4.5.7 Proposal shall include a price for a spare main power transformer (MPT) that is in compliance with the Generation Facility Standards (Appendix F) as a separate line item (not included in) the Proposal Bid Price (Appendix B)

4.6 The Proposal and its Bid Price must not be contingent upon awarding an operations and maintenance agreement for the Project.

4.7 Pricing shall include any costs associated with meeting the credit requirements stated in the Form PSA Term Sheet.

5. RFP Schedule and Proposal Submission

5.1 The schedule and deadlines set out in this section apply to this RFP. KPCO reserves the right to revise this schedule at any time and at its sole discretion.

RFP Timeline	
RFP Issued	8/3/2026
Confidentiality Agreement Request Deadline	8/26/2026
Proposal Due Date	9/2/2026
Short-List Selection	11/18/2026
Execute Definitive Agreements	3/16/2027
File for Regulatory Approvals	3/30/2027
Required Regulatory Approvals	3/30/2028
Notice to Proceed	5/16/2028
Commercial Operation Date	No later than 3/31/2031

5.2 Confidentiality Agreement. Bidders who intend to bid should request a form Confidentiality Agreement ("CA") by submitting a notice of intent via the email address below:

KPCO2026RFP@aep.com.

Bidders should include the project(s) name, agreement type (PSA, PPA) technology, location, size (MW), and PJM Queue number in the notice of intent. Bidders will be required to sign a CA prior to receiving access the following documents via the RFP SharePoint site:

- Instructions on Proposal submittal through RFP SharePoint site.
- Form PSA Term Sheet, and other PSA related documents (Appendix D)
- AEP Generation Facility Standards (Appendix F)
- Natural Gas Data Review Form and Unit Cost Firm Transportation Form (Appendix K)

- Project Land Lease, Decommissioning Cost, and Property Tax spreadsheet (Appendix M)
- Project Technical Due Diligence Material (Appendix N)
- Site Details, Environmental, and Wildlife Form (Appendix O)
- Other Non-Price Factor Documentation (Appendix P)

5.3 The Company reserves the right to solicit additional information or Proposals and the right to request additional information from Bidders during the Proposal evaluation process.

5.4 Proposals must be complete in all material respects and be uploaded electronically to the **RFP SharePoint site** no later than 3:00 p.m. ET on the Proposal Due Date. Proposals should be as comprehensive as possible to enable the Company to make a definitive and final evaluation of the Proposal's benefits to its customers without further contact with the Bidder. Detailed instructions on how to submit Proposals will be provided upon signing a CA.

5.5 Proposals and Bid Pricing must be valid for at least 120 days after the Proposal Due Date at which time Proposals shall expire unless the Bidder has been notified that its Proposal has been included in Short-List Selection.

6. Proposal Content

Bidders must submit the following information for Proposals. All electronic versions of the Appendices shall be individual files. Proposal content shall be uploaded to the applicable SharePoint folders and not reference other areas of the Proposal even if the information is duplicative.

6.1 A completed Proposal Content Check Sheet.

6.2 A cover letter signed by an authorized representative of the Bidding Company.

6.3 An executive summary of the Project's characteristics and timeline, including any unique aspects and benefits.

6.4 Completed Appendix A (Project Summary) including an electronic Project Summary Form (link to Smartsheet form in the RFP SharePoint) and the following attachments:

- Interconnection Studies: Include a copy of all completed interconnection studies (i.e., System Impact Study, Facilities Study, etc.).
- Bidder's Experience: Bidder must provide documentation showing they have substantial experience in operating and maintaining a similar electric generation facilities of an equal or greater MW size in the United States or any portion of Canada within the jurisdiction of NERC, and (ii) meet all applicable requirements under applicable law for operating and maintaining such facilities, including the requirements of an RTO / ISO. A Person will be deemed to have such substantial

experience if it is a Person that has at least three (3) years of experience in operating and maintaining electric generation facilities of a similar MW size or greater in the United States or any portion of Canada within the jurisdiction of NERC.

- Site Control Documents: Include a copy of all leases, easements, or other ownership documentation including to the point of interconnection.
- Site Layout: Include a diagram or map identifying the Project boundary with anticipated placement of major equipment and other project facilities, including transmission layouts and point of interconnection. Also, include .KMZ files of the Site Layout that include the proposed site plan, site boundaries, exclusion areas, collection lines, gen-tie, etc.
- Equipment Warranty Information: Include detailed information regarding the equipment manufacturer's warranty offering including parts and labor coverage and other key terms.

6.5 A completed Appendix B (Proposal Bid Pricing)

- Pricing should be inclusive of all requirements outlined in Section 4 in this RFP as well as the requirements of the Form Agreement.

6.6 A completed Appendix C (Bidder's Credit-Related Information and Bidder Profile) which shall include:

- The identity of all persons and entities that have a direct or indirect ownership interest in the Project.
- Copies of the Annual Reports for the three most recent fiscal years and quarterly reports for the most recent quarter ended, if available.
- At least three third-party references for Projects similar to those sought by the Company in this RFP.

6.7 Provide (i) an affirmative statement that Bidder is taking no exception to the Form Term Sheet provided pursuant to this RFP; or (ii) A comprehensive list of the Bidder's commercial, legal, and other exceptions to the terms and conditions contained in the applicable Form Term Sheet. (Appendix D).

6.8 A list of any exceptions it takes to the applicable AEP Generation Facility Standard and Scope of Work (Appendix F).

6.9 All required Resource Analysis/Study Information for the corresponding resource type (Appendix K).

6.10 Bidder shall submit a Finance Plan on a separate form. Bidders must demonstrate their ability to finance development of the Project so it can reach commercial operation, including all Engineer Procurement Construction (EPC) contractor related and other necessary activities. Bidders must provide a proposed financing plan, including any

letters of support, previous correspondence with banks/lenders intending to provide financing for the project (Appendix L).

6.11 Bidder's Proposal shall include a completed Appendix M containing expected Land Lease Costs, Decommissioning Costs, and Property Taxes, as well as a written description of each.

- Costs included in the Project Land Lease, Decommissioning Cost, and Property Tax spreadsheet should include:
  - Land Lease Costs shall be provided by year for a 35-year operating period. Projects must report all land obligations (e.g., options to lease or purchase land, royalties, easement payments, etc.) to ensure KPCO has a full understanding of the all-in costs to support the land rights needed for the proposed Project. Any leases that include revenue-based royalty structures will need to be amended prior to closing any PSA transaction.
  - Decommissioning Costs must include typical costs to remove the facility and restore the site, as well as any bond release or other end-of-life payment obligations.
  - Property Taxes must include the current status of efforts to secure abatements or payments-in-lieu-of-taxes (PILOTs) being sought and details about any local or state abatement programs available, or restrictions on such programs, and a written description of how such expenses were calculated.
- Provide a site control map showing Project boundaries, setbacks/exclusions, general equipment layout, and land lease status (i.e., land currently under lease, land expected to be leased, land NOT likely to be leased, and indeterminate status).

6.12 All required Technical Due Diligence Material (Appendix N)

6.13 A completed Appendix O (Site Details / Environmental / Wildlife)

- Site Environmental and Wildlife Review Form
- Site Layout: Include a diagram or map identifying the boundary with anticipated placement of major equipment and other project facilities, including transmission layouts and Point of Delivery.
- Permit Matrix: Attach a comprehensive permit matrix and status of all required permits, including, but not limited to Federal (USFWS, FAA), State, County, City, etc.
- Environmental Report Summary: Summary of all environmental and other reports associated with the site.

6.14 A completed Appendix P (Other Non-Price Factor Documentation Form).

7. Proposal Evaluation

Proposals must include all applicable content requirements as described in Section 6. KPCO will consider bids that are reliable, feasible, and represent a reasonable cost means of satisfying the requirements of this RFP. The Evaluation Process, which includes three main steps, is central to the success of KPCO's RFP process.

Section 7.1: Eligibility and Threshold Requirements
Section 7.2: Detailed Analysis (Economic and Non-Price)
Section 7.3: Short-List Selection

7.1 Eligibility and Threshold Requirements: If the Bidder does not qualify under any one of the Sections 7.1.1 –7.1.13, the Bidder will not qualify for this RFP and will be notified accordingly.

7.1.1 Proposal must be for a PSA for a Combined Cycle Natural Gas Project (Section 2.1 and 2.2).

7.1.2 Projects must have an Expected COD no later than 3/31/2031 (Section 3.2).

7.1.3 Project must have a minimum nameplate rating MWac by resource as listed in Section 3.4.

7.1.4 Projects must be physically located in Kentucky, interconnected (via Interconnection Agreement or pseudo-tie) to the PJM Transmission system, and deliverable to the AEP Locational Deliverability Area (LDA). (Section 3.5).

7.1.5 Project Specific Requirements (Section 3.6):

Natural Gas Asset will be, or have been, built using utility grade equipment, components, and materials. The asset design must incorporate prudent utility features for maintainability and safe reliable operation.

7.1.6 Bidder must have established Site Control (Section 3.7).

7.1.7 Natural Gas Projects must have a minimum design life of 30 years, (Section 3.9).

7.1.8 Bidder must have a completed PJM System Impact Study which remains active in the PJM queue (Section 3.11).

7.1.9 Bidder's exceptions to the PSA Term Sheet must be complete and, considered individually or in the aggregate, minimally acceptable to the Company as a basis for further discussions (Section 6.7). If exceptions are not provided, the Bidder should include an affirmative acknowledgement that the Term Sheet is acceptable to the Bidder. KPCO reserves the right to disqualify any Bidder that provides an incomplete list of exceptions (for example, by noting that the

Bidder's exceptions list has not been reviewed by certain commercial, functional or legal reviewers and may be supplemented with additional exceptions on further review).

7.1.10 Proposal must include detailed exceptions, if any, to the applicable AEP Generation Facility Standard and Scope of Work in Appendix F (Section 6.8).

7.1.11 Resource Information: Bidder must submit all required Resource Studies/Information listed in Appendix K (Natural Gas). (Section 6.9).

7.1.12 Bidder or its affiliates must have completed the development, engineering, equipment procurement, and construction of a project, within the United States or Canada, of the same technology type, and of a size comparable to that of the Bidder's proposed Project and/or have demonstrated appropriate experience (Appendix A).

7.1.13 Bidder is required to include requested financial information (Appendix C) so that AEP's credit department can conduct a financial wherewithal assessment. Bidders are required to verify that any costs associated with meeting the credit requirements are included in the submitted Bid Price (Appendix B) (Section 4.7).

7.2 Detailed Analysis: Proposals meeting the Eligibility and Threshold Requirements in Section 7.1 will move to the Detailed Analysis phase which is comprised of the Economic Analysis and the Non-Price Factor Analysis set forth below. The Economic Analysis will constitute 60% and the Non-Price Factor Analysis will constitute 40% of the overall evaluated value of each Proposal in the Short-List Selection process.

7.2.1 Economic Analysis (60%): The Economic Analysis will include the calculation of three financial metrics which will provide multiple perspectives on cost and value, including:

Levelized Adjusted Net Cost of Energy (LANCOE),

Levelized Adjusted Net Cost of Capacity (LANCOC), and

Value to Cost (V/C) Ratio.

V/C Ratio will be the primary ranking metric. Additional details of the three financial metrics described above are as follows with supporting definitions below:

$$\text{LANCOE (\$/MWh)} = \frac{\text{Total Cost (\$) - Total Value (\$)}}{\text{Present Value of Projected Energy Production (MWh)}}$$

$$\text{LANCOC} = \frac{\text{Total Cost (\$) - Total Value (\$)}}{}$$

($/MW-Day) $= \frac{\text{Present Value of Projected PJM Accredited Capacity (MW)}}{}$

V/C Ratio $= \frac{\text{Total Value}}{\text{Total Cost}}$

Definitions

Total Cost: The Company will determine the present value of the costs of each qualifying Proposal. This Total Cost calculation is based on a PSA Proposal's Bid Price ($M) plus projected operations and maintenance costs (including land lease costs), fuel expense, Transmission and Congestion costs, tax expenses, decommissioning costs (including expected salvage), terminal value, and applicable federal tax credits. For PPA bids, Total Costs will be evaluated based on the contract's demand charges, energy charges, and any other applicable charges. Other costs may be included based on the Company's discretion to appropriately evaluate each Proposal to ensure the Company is comparing all qualifying Proposals on an equivalent basis.

Total Value: The Company will determine the present value of all the value streams of each qualifying Proposal. The value streams include the expected PJM revenues for the Proposal's energy and ancillary services, the expected value of renewable energy certificates (RECs), capacity value, and any applicable terminal value. Additionally, other value streams and financial metrics may be included based on the Company's discretion to appropriately evaluate each Proposal to ensure the Company is comparing all qualifying Proposals on an equivalent basis.

Transmission and Congestion Costs: Transmission and Congestion Costs will be determined by the Company's transmission screening analysis. The transmission screening analysis will evaluate (i) transmission facilities cost and the network upgrade cost allocated to the Proposal, (ii) expected cost of transmission congestion and losses to the AEP West load zone and (iii) cost of deliverability/curtailment risk mitigation that the Company calculates to ensure that the resources can be designated as firm resources to meet Company's capacity obligations. Transmission and Congestion Costs will be included in Total Cost calculations.

PJM Accredited Capacity: PJM Accredited Capacity shall be computed by adjusting a qualifying Proposal's applicable nameplate or contracted capacity by the forecasted adjustments that are used, or are expected to be used, by the PJM RTO to determine the number of MW that the Company will be credited for use in meeting applicable capacity obligations. These adjustments will include, but are not limited to, summer and winter Effective Load Carrying Capability (ELCC) adjustments and forced outage rate adjustments.

7.2.2 Non-Price Factor Analysis: The Non-Price Analysis will constitute 40% of the overall evaluated value of each Proposal. KPCO will consider applicable risks and factors that are not already captured in the economic analysis, including service reliability-related factors. These include, but not limited to, the following four categories:

Category A: Location & Local Benefits

Project Location

The Company will evaluate the location of a project and preference will be given to projects interconnected on KPCO wires. Projects interconnected on KPCO's system provided enhance the Company's ability to reliably serve its customers.

Local Economic Impacts & Benefits

This factor will include a review of the following: 1) the economic benefits to local governments and businesses as well as local property and sales tax benefits, 2) use of contractors based in Arkansas, Louisiana, or Texas, 3) known current or historical community support or opposition for the Projects, and 4) the Bidder's plan for managing community relations.

Environmental Impact and Community Engagement

Bidders should provide the status of a Project stakeholder engagement plan to address environmental impact, how communities or organizations will have an opportunity to participate in decisions about activities that may affect their environment and/or health, how their concerns will be considered in the decision-making process and how these communities are involved in workforce opportunities associated with the Project.

Bidders should summarize expected impacts on the local economy, which may include factors such as job creation for the KPCO customer base, use of local materials, tax benefits, or other benefits accruing to its customers.

Category B: Dispatchability & Flexibility

Projects which can reliability produce energy when called upon enhance the Company's ability to reliably serve its customers. Dispatchability consists of several components, which will be evaluated collectively.

Dispatch Capability

The resource's ability to be dispatched to its maximum capacity on demand.

Dispatch Range

Difference between unit's economic minimum and summer maximum capability.

Ramp Rates
The MW/Minute increase or decrease of a unit being offered for economic dispatch.

Max Operational Hours
The maximum number of hours a generating unit can run at its full capability over the course of an operating day.

Minimum Run Time
The minimum number of hours a unit must run, in real-time operations, from the time after generator breaker closure, which is typically indicated by telemetered or aggregated State Estimator megawatts greater than zero, to the time of generator breaker opening.

Minimum Down Time
The minimum number of hours under normal operating conditions between unit shutdown and unit startup, calculated as the shortest time difference between the unit's generator breaker opening and after the unit's generator breaker closure.

Ancillary Service Potential
Assessment of ability of the unit to provide the various ancillary services available in the PJM market.

Fuel Supply
Assessment of fuel supply considerations for thermal resources.

Category C: Technology Risks and Benefits

Assessment of systemic risks and benefits of each technology type, including but not limited to:

Environmental Regulatory Risk
Exposure, or lack of exposure, to potential costs of compliance with environmental regulations.

Fuel/Charging Cost Risk
Exposure, or lack of exposure, to risks associated with variable energy production costs.

Energy Production Benefits
Energy market risk mitigation benefit associated with energy production, as measured by expected capacity factor.

Category D: Proposal Risk and Project Quality

Contract Exceptions
The Company will review all Bidder-proposed Form PSA exceptions with a focus on minimizing added risks or costs to the Company. Prior acceptance of similar exceptions in past negotiations will not guarantee acceptance. The Company will also assess overall commercial risk, including exposures created by proposed terms and any uncertainties that could affect financial or operational outcomes.

Asset-Specific Benefits & Risks
The Company will review the extent to which the Proposal provides additional flexibility or exposes the Company and its customers to higher than Projected market prices and volatility due to the timing, the term length of a contract, or the finite life of an asset.

Developer Experience & Financial Wherewithal
The Company will evaluate the Bidder's project experience, safety record, any material legal proceedings, and overall financial strength, including creditworthiness and ability to provide acceptable collateral. This review will consider prior project performance, financial statements, credit ratings, and proposed collateral forms such as letters of credit and parent guarantees.

Project Finance Plan
The Company will evaluate the Project's financing plan, including the Bidder's ability to secure funding through all phases of development and construction. The plan should clearly outline financing sources and mechanisms, along with estimated construction and financing costs.

Interconnection Status
The Company will assess the proposed Project's planned interconnection arrangements with a focus on completeness of the Generation Interconnection process as prescribed by PJM as well as the scope, schedule, and estimated deliverability of the prospective Project, including the potential impacts on the ability of the Project to meet its proposed COD date.

Site Control
The Company will review the status of real property acquisition/site control progress and land use permitting and zoning.

Permitting, Studies & Zoning (local, federal, environmental, wildlife)
The Company will review all Bidder provided environmental documents and reports for the Project, including those related to transmission, interconnection, operations and maintenance facilities, and other infrastructure. This includes

materials such as permit matrices, plans, wetland delineations, cultural and historical studies, wildlife and habitat assessments, agency coordination, Phase I ESAs, siting studies, and any other relevant environmental documentation. The Company will assess the Bidder's compliance with all applicable federal, state, and local environmental regulations and incorporate this into the non-price factor score.

Project Timing
The review will evaluate potential risks, such as schedule delays or equipment supply issues, that could impact achieving the targeted COD, as well as the desirability of the COD.

Project Finance Plan
The Company will evaluate the financing plan and its status for the Project. Bidders must demonstrate their ability to finance development of the Project so it can reach commercial operation, including all EPC-related and other necessary activities. The financing plan should describe how the Project will be financed, including the sources and mechanisms for financing and distinctions in financing in different phases of the development process. Bidders should include the estimated construction costs as well as the financing costs for the Project.

Supplier and Contractor Arrangements
The Company will evaluate the nature and status of Bidder's EPC contracts and relationships with respect to material equipment and resource supply.

Fuel Delivery Plan
This criterion refers to the quality and availability of the fuel supply and transportation arrangements of the Project relative to the technology proposed. The Company prefers Proposals whereby the applicable fuel supply and transportation infrastructure is connected to liquid markets, with access to reputable and creditworthy counterparties.

Furthermore, facilities will be scored based on an evaluation of fuel security and the applicable fuel supply plan. This assessment may include but not be limited to compatibility between the facility operation and the operating conditions on pipelines offering service to the facility, price volatility at the facility's cited market hub and other factors.

If the Project is in the early stages of development, the Company requires a fuel supply procurement plan that demonstrates that the fuel supply arrangements adequately conform to the type and technology of the Project proposed consistent with the security and reliability required by the Company. The Company will evaluate the fuel supply and transportation status of each Project relative to the type of Project and technology proposed.

Water Supply
This criterion considers the degree of certainty offered by the Bidder in securing the necessary water supply required by the Project. The evaluation will be based on the Bidder's plan for securing water contracts/rights for the Project and the reasonableness of the plan relative to the Project type and schedule.

7.3 Short-List Selection: KPCO will consider bids that are feasible and represent a reasonable cost means of satisfying the requirements of this RFP. Based on the results of the Detailed Analysis described above in Section 7.2, the Company will determine which Projects will be included in the Short-List Selection while also taking into consideration previous state commission orders in each of KPCO's jurisdictions. The Company will notify Bidders whether or not their Proposal has been selected and negotiation of definitive agreements will commence with Bidders whose Proposals have been selected.

Shortlisted Bidders are not guaranteed award of a contract. An awarded PSA is subject to final negotiations of a definitive agreement. KPCO anticipates that fewer contracts will be executed than the number of Shortlisted bids.

KPCO reserves the right to disqualify any Shortlisted Bidder that provides a marked Term Sheet that materially departs from their previously submitted exceptions list (see Section 7.1.9).

8. Reservation of Rights

A Proposal will be deemed accepted only when the Company and the successful Bidder have executed a definitive Purchase Sale Agreement for the Company's acquisition of the Project. The Company has no obligation to accept any Proposal, whether or not the stated price in such Proposal is the lowest price offered, and the Company may reject any Proposal in its sole discretion and without any obligation to disclose the reason or reasons for rejection.

By participating in the RFP process, each Bidder agrees that any and all information furnished by or on behalf of the Company in connection with the RFP is provided without any representation or warranty, express or implied, as to the usefulness, accuracy, or completeness of such information, and neither the Company nor its Affiliates nor any of their personnel or representatives shall have any liability to any Bidder or its personnel or representatives relating to or arising from the use of or reliance upon any such information or any errors or omissions therein.

The Company reserves the right to modify or withdraw this RFP, to negotiate with any and all qualified Bidders to resolve any and all technical or contractual issues, or to reject any or all Proposals and to terminate negotiations with any Bidder at any time in its sole discretion. The Company reserves the right, at any time and from time to time, without

prior notice and without specifying any reason and, in its sole discretion, to (a) cancel, modify or withdraw this RFP, reject any and all Proposals, and terminate negotiations at any time during the RFP process; (b) discuss with a Bidder and its advisors the terms of any Proposal and obtain clarification from the Bidder and its advisors concerning the Proposal; (c) consider all Proposals to be the property of the Company, subject to the provisions of this RFP relating to confidentiality and any confidentiality agreement executed in connection with this RFP, and destroy or archive any information or materials developed by or submitted to the Company in this RFP; (d) request from a Bidder information that is not explicitly detailed in this RFP, but which may be useful for evaluation of that Bidder's Proposal; (e) determine which Proposals to accept, favor, pursue or reject; (f) reject any Proposals that are not complete or contain irregularities, or waive irregularities in any Proposal that is submitted; (g) accept Proposals that do not provide the lowest evaluated cost; (h) determine which Bidders are allowed to participate in the RFP, including disqualifying a Bidder due to a change in the qualifications of the Bidder or in the event that the Company determines that the Bidder's participation in the RFP has failed to conform to the requirements of the RFP; (i) conduct negotiations with any or all Bidders or other persons or with no Bidders or other persons; (j) execute one or more definitive agreements with any Bidder, and (k) utilize a Bidder's completed Appendices and any supplemental information submitted by the Bidder in any of its regulatory filings.

9. Confidentiality

KPCO will take reasonable precautions and use reasonable efforts to maintain the confidentiality of all bids submitted. Bidders should clearly identify each page of information considered to be confidential or proprietary. KPCO reserves the right to release any Proposals to agents or consultants for purposes of Proposal evaluation. KPCO's disclosure policies and standards will automatically bind such agents or consultants. Regardless of the confidentiality, all such information may be subject to review by or in proceedings before the appropriate state authority, or any other governmental authority or judicial body with jurisdiction relating to these matters and may be subject to legal discovery. Under such circumstances, KPCO and AEPSC will make reasonable efforts to protect Bidder's confidential information.

10. Bidder's Responsibilities

10.1 It is the Bidder's responsibility to submit all requested material by the deadlines specified in this RFP.

10.2 The Bidder should make its Proposal as comprehensive as possible so that KPCO may make a definitive and final evaluation of the Proposal's benefits to its customers without further contact with the Bidder.

10.3 Bidders are responsible for the timely completion of the project and are required to submit proof of their financial and technical wherewithal to ensure the successful completion of the project.

10.4 The Bidder will be responsible for any expenses Bidder incurs in connection with the preparation and submission of a Proposal and/or any subsequent negotiations regarding a Proposal in response to this RFP. KPCO will not reimburse Bidders for their expenses under any circumstances, regardless of whether the RFP process proceeds to a successful conclusion or is abandoned by KPCO at its sole discretion.

11. Contacts

11.1 General RFP Questions: All correspondence and questions, with the exception of interconnection related questions, regarding this RFP should be directed to:

KPCO2026RFP@aep.com

Appendix A (Project Summary)
Appendix A
Project Summary

Company Information

Bidder (Company):		
Contact Name:		
Contact Title:		
Address:		
City:	State:	Zip Code:
Work Phone:	Cell Phone:	
Email Address:		
Is the Proposal being submitted through a partnership, joint venture, consortium, or other association? If so, please identify all partners, joint ventures, members, or other entities or persons comprising same.		
Additional company information to be provided in Appendix C – Bidder's Credit-Related Information and Profile		

General Project Information

Project Name:		
Project Type: New or Operational?		
Project site located (County, State):		
PJM Queue Cluster #:	PJM Queue #:	
Expected Commercial Operation Date:		
Percentage of Federal Tax Credit that the Project will quality for:		%
Strategy for qualifying for PTC/ITC Federal Tax Credit:		
Design Life (Years); if an Operational Resource, also include estimated remaining useful life:		
Bidder confirms that it has substantial Project site control		(Y/N):
Is the Proposal for 100% of the asset? (Y/N) If No, what percentage?		%

Natural Gas Project Information

Fuel Type (Primary / Secondary):			
Project Capacity Values, MWac	Nameplate Rating	Winter Rating	Summer Rating
Include all equipment warranty information in the Appendix A SharePoint folder.			
Additional Natural Gas Project information to be provided in Appendix K –Natural Gas Resource Information			

Interconnection (PJM)

PJM Queue #:	Substation Name / Voltage:
Feasibility Study Complete (Y/N):	Feasibility Study Report Date:
System Impact Study Complete (Y/N):	System Impact Study Report Date:
Facilities Study Complete (Y/N):	Anticipated Facilities Study Completion Date:
Total Network Upgrade Costs (including Affected System Network Upgrade Costs) Allocated to Project from System Impact Study or Facilities Study if completed:	$
Total Direct Interconnection costs from System Impact Study or Facilities Study if completed:	$
Point of Interconnection with:	
Type of transmission service (NRIS, ERIS):	
PJM Interconnection Status (including description of any communication with PJM):	
Please attach a copy of all interconnection studies/agreements and/or the expected completion date(s) in the Appendix A SharePoint folder.	

Site Information

Site Legal Description:		
Address:		
City:	State:	Zip Code:
County	Longitude:	Latitude:
Site Control (lease, own, site purchase pending, etc.):		

Site Acres:	Acres Under Site Control (%):
Is there potential for expansion (Y / N):	If Yes; acres available:
Have you contacted all required permitting agencies regarding this project and identified all necessary permits?	
Permits	
Local (County, City, etc.) (Y / N):	
State (Y / N):	
Federal (Y / N):	
Wildlife Resources (Federal, State, etc.) (Y / N):	
Other (Y / N):	
Additional Site information and Form to be provided in Appendix O – Site, Environmental and Wildlife Information.	

Projects Completed of the Same Technology Type

Provide a summary of all projects of comparable size that Bidder has successfully developed and completed in the United States or Canada. For each project, describe the Bidder's specific role in the project (provide in a separate attachment, if necessary).

Project	Location	MWac	Bidder's Role

Total MWac =	

Appendix B

PSA Proposal Bid Pricing

Project Name:	
Developer:	
Resource Type: New or Operational	
Proposal Type:	PSA

Note: Optional size(s) provided cannot be contingent on Bidder selling the remaining portion of the Project to another party via a sale of a portion of the project company or a power purchase agreement.

PSA Proposal Bid Pricing

Base Natural Gas Proposal				
Expected COD by	**Equipment Manufacturer**	**Expected Annual Energy**	**Capacity Factor**	**Bid Price, $**
				$
Does the Bid Price include an O&M building that meets the Generation Facility Standards?				
Interconnection Costs included in Bid:				$
Do the interconnection costs above match the attached studies (Y or N)? If No, please explain below:				
Does the Transmission Owner have plans to self-fund any of the interconnection / network upgrade costs for this Project? If so, please explain below and indicate whether, or not, the self-funding is reflected in the Bid Price:				
Does the Bid Price include all costs necessary to meet the credit requirements outlined in the KPCO Security Table document provided with Appendix D (PSA) (Y or N)?				
Include the cost of a spare Main Power Transformer (MPT) that meets the AEP Generation Facility Standard specification (Appendix F)				$

Appendix C

Bidder's Credit-Related Information

Full Legal Name of the Bidder:
Type of Organization (Corporation, Partnership, etc.):
Bidder's % Ownership in Proposed Project:
Full Legal Name(s) of Parent Corporation: 1. 2. 3.
Entity Providing Credit Support on Behalf of Bidder (if applicable): Name: Address: City: Zip Code:
Type of Relationship:
Current Senior Unsecured Debt Rating: 1. S&P: 2. Moody's:
Bank References & Name of Institution:
Bank Contact: Name: Title: Address: City: Zip Code: Phone Number:
Legal Proceedings: As a separate attachment, please list all lawsuits, regulatory proceedings, or arbitration in which the Bidder or its affiliates or predecessors have been or are engaged that could affect the Bidder's performance of its bid. Identify the parties involved in such lawsuits, proceedings, or arbitration, and the final resolution or present status of such matters.
Financial Statements: Please provide copies of the Annual Reports for the three most recent fiscal years and quarterly reports for the most recent quarter ended, if available. If available electronically, please provide link.
Ability to Post Collateral and Raise Capital: Please provide a narrative describing the Bidders' ability and plan to both post collateral and raise capital to facilitate the development and construction of the project.

Bidder Profile

Please list Bidder's Affiliate companies: 1. 2. 3. 4.
Please identify all persons and entities that have a direct or indirect ownership interest in the Project:
Please attach a summary of Bidder's background and experience in the development of projects of the same technology as the proposed project.
References 1. Company a. Contact Name: b. Contact Number: c. Project: 2. Company a. Contact Name: b. Contact Number: c. Project: 3. Company a. Contact Name: b. Contact Number: c. Project: 4. Company a. Contact Name: b. Contact Number: c. Project:

Appendix D

Form Term Sheet

See Section 5.2 for instructions to obtain the Form Term Sheet (Natural Gas).

Appendix E

INTENTIONALLY LEFT BLANK

Appendix F

AEP Generation Facility Standards

See Section 5.2 for instructions to obtain the AEP Generation Facility Standards and Scope of Work.

- KPCO Technical Addendum 1
- Generic Natural Gas Specifications
- Scope of Work (Natural Gas)

Bidder must provide acknowledgement that the AEP Generation Facility Standard and Scope of Work are acceptable or a list of any proposed comments or exceptions it takes to the applicable AEP Generation Facility Standard and Scope of Work.

Appendix G

AEP Requirements for Connection of Facilities

Please follow the link below to access the AEP Requirements for Connection of Facilities ("Requirements for Connection of New Facilities or Changes to Operational Facilities Connected to the AEP Transmission System"). Provide any exceptions to the AEP Connection Requirements if connecting to the AEP Transmission System.

https://www.aep.com/assets/docs/requiredpostings/TransmissionStudies/Requirements/AEP_Interconnection_Requirements_Rev5.pdf

Appendix H

INTENTIONALLY LEFT BLANK

Appendix I

INTENTIONALLY LEFT BLANK

Appendix J

INTENTIONALLY LEFT BLANK

Appendix K

Natural Gas Resource Information

See Sections 5.2 for instructions to obtain the document identified below:

1. Bidder must populate the data required in the Company's following document:

    - Unit Firm Transportation Form_2026
    - Natural Gas Data Review Form_2026 to include evaluation(s) of potential interconnections to mainline Natural Gas pipeline infrastructure (see Section 5.2 for instructions to obtain this document).

Appendix L

Financing Plan

Bidder to include a description of its financing plan.

Appendix M

Project Land Lease Costs / Decommissioning Costs / Property Taxes

See Sections 5.2 for instructions to obtain the document identified below:

1. Bidder must populate the data required in the Company's "Project Land_Decommissioning_PropertyTax_2026.xls" spreadsheet. Information to be provided shall include:

    a. Expected Land Lease Costs by year for at least a 35-year operating period. The Land Lease Costs will be used in the Economic Analysis.

    b. Estimated decommissioning costs (including separately specifying salvage value). In addition, Bidder shall provide any associated decommissioning studies.

    c. Expected property taxes, including any abatements or payments in lieu of taxes (PILOTs), *along with a written description of how such figures were determined/calculated*.

2. Attach a copy of all leases, easements, or other ownership documentation.

3. Provide a site control map showing Project boundaries, setbacks/exclusions, general equipment layout, and land lease status (i.e., land currently under lease, land expected to be leased, land NOT likely to be leased, and indeterminate status).

Appendix N

Project Technical Due Diligence Material

Bidders must provide the following basic technical due diligence material to allow the Company to perform an initial technical due diligence of the Project.

1. Preliminary Electrical One Line: Provide a preliminary substation and collector system electrical one-line diagram of the Project.

2. NERC Compliance Description: If the proposed Project site and equipment is defined as an Element of the Bulk Electric System, provide a description or plan for compliance to the applicable standards (if one is available prior to the Proposal Due Date).

3. Quality Control Plan: Provide a description or a quality control plan from a recent project for major equipment supplier surveillance (i.e., fabrication inspections and testing).

4. Proposed Relay Protection Scheme: Provide a description or a relay protection one-line diagram of the project substation relay protection schemes including gen-tie to the point of interconnect (if one is available prior to the Proposal Due Date).

5. SCADA Network One Line: Provide a description or a block diagram of the SCADA and communication network configuration and a description of cyber security features.

6. Main Power Transformer: Provide a description and the manufacturer of the main power transformer included in the Proposal.

7. Geotechnical Reports: Provide copies of all completed geotechnical reports and accompanying data and attachments (if available prior to the Proposal Due Date).

8. Construction Milestone Estimates (form included)

Appendix O

Site Details / Environmental / Wildlife

1. Bidder must populate the data required in the Company's "Site_Environmental_Wildlife Review Form" document (*See Sections 5.2 for instructions to obtain*).

2. Bidder must include the following attachments (referenced to Appendix O)
   a. Site Layout: Provide a diagram or map identifying boundaries, anticipated placement of major equipment and other project facilities, including project gen-tie line, point of interconnection, and project access roads.
   b. Project boundary (.kmz (preferred) or shape files *and* a pdf on USGS topographic map).
   c. Permit Matrix: List and describe all city, county, state and federal permits required for this project. Include: status, duration, planned steps, any known mitigation requirements, critical milestones, and timelines.
   d. Environmental Report Summary: The initial Proposals shall include a summary of all environmental studies, reports and agency meetings associated with the Project. (See below for potential reports to summarize, include data summaries, results and findings)
   e. Site Control: Verify site control and reference documentation is provided under Appendix M.

3. Please attach any reports providing environmental information specific to the project, including but not limited to, the following reports as available:
   a. Critical Issues Analysis
   b. Tier I / II Site Characterization Report
   c. Environmental Work / Survey Plan
   d. Bat Acoustic Survey Report
   e. Avian Use Survey Report
   f. Raptor Nest Survey Report
   g. Prey-base Survey Report
   h. Eagle Risk Assessment Report
   i. Wetland, Waters and Playa Survey / Assessment Report
   j. Whooping Crane Habitat Assessment Report
   k. Lesser Prairie Chicken Survey / Assessment Report
   l. Phase I Environmental Site Assessment Report
   m. Historical and Cultural Resource Survey / Assessment Report
   n. All Other Species and Environmental Resource Survey and Study Reports
   o. Record and Notes of all Federal or State Resource Agency Correspondence and Meetings
   p. Associated Project Infrastructure and Environmental Resource Shapefiles (.kmz format)
   q. Aviation / FAA Studies
   r. Radar Study
   s. Noise and Shadow Flicker Study

t. Bird and Bat Conservation Strategy and Eagle Conservation Plan (if available).

Appendix P

Other Non-Price Factor Documentation

See Sections 5.2 for instructions to obtain any of the forms identified below:

1. Bidder must populate the data required in the Company's "Other Non-Price Factor Documentation Form."

Appendix Q

INTENTIONALLY LEFT BLANK

Appendix R

Operational Resource Information

In addition to the other appendices, Operational Resources are required to upload all of the historical Operational Resource information listed below into the Appendix R SharePoint folder:

Operational Resources

Historical operational information over the last 7 years (or less if commercial operation was more recent), including:

- Production data and availability as well as downtime issues and outlook
- Congestion and curtailment
  - Environmental, Safety issues and violations
  - NERC violations and resolution
  - Major scheduled and unscheduled maintenance matters as well as resolution
  - Community relations / external affairs issues
  - Detailed annual operations budgets, including forecasted v. actual
- Environmental and permitting summary
- List and description of any outstanding legal matters
- Facility Site Plan and General Arrangement
- List of all warranties
- Staffing
- Summary of material contracts (interconnection agreement, operations & maintenance agreements, etc.) and confirmation that the project is in compliance with all such contracts, including land leases
- Confirmation of whether the project holds firm transmission service and, if applicable, Natural Gas transportation capacity and Natural Gas supply
- Property tax abatements and/or payments in lieu of taxes
- Commercial operation date

Appendix S

INTENTIONALLY LEFT BLANK

PSA Proposal Content Check Sheet

Item	Mark Complete and Included "X"
Cover Letter with Statement of Firm Pricing	
Executive Summary	
Appendix A Summary, as appropriate for the Proposal	
▪ Completed Electronic Summary Form (Link in SharePoint Site)	
▪ Interconnection Studies	
▪ Equipment Warranty Information	
Appendix B (Bid Pricing w Statement of Firm Pricing for 120 days)	
Appendix C (Bidder's Credit Information and Profile)	
▪ Company Financials	
Appendix D (Exceptions to Form Term Sheet or affirmative acknowledgement that the Form Term Sheet is acceptable to the Bidder)	
Appendix E (Intentionally Left Blank)	
Appendix F (Exceptions to AEP Generation Standard)	
Appendix G (Exceptions to AEP Requirements for Connection, if applicable)	
Appendix H (Intentionally Left Blank)	
Appendix I (Intentionally Left Blank)	
Appendix J (Intentionally Left Blank)	
Appendix K (Natural Gas Resource Information), if applicable	
▪ Natural Gas Data Review Form_2026	
Appendix L (Financing Plan)	
Appendix M (Projected Land Lease, Decommissioning Costs, and Property Taxes)	
▪ Project Land_Decommissioning_Property Tax Spreadsheet (along with written description of Property Tax calculations)	
▪ Lease Documents and all other Site Control information	
▪ Site Control Map	
▪ Decommissioning Studies	
Appendix N (Project Technical Due Diligence Material)	
▪ Preliminary Site Layout	

▪ Preliminary Electrical One-Line	
▪ NERC Compliance Description	
▪ Quality Control Plan	
▪ Proposed Relay Protection Scheme	
▪ SCADA Network One-Line	
▪ Main Power Transformer description	
▪ Geotechnical Reports	
▪ Construction Milestone Form	
Appendix O (Site Details / Environmental / Wildlife)	
▪ Site_Environmental_Wildlife Review Form	
▪ Site Layout	
▪ Site Boundary	
▪ Permit Matrix	
▪ Decommissioning Studies	
▪ Environmental Report Summary	
Appendix P (Other Non-Price Factor Documentation)	
▪ Other Non-Price Factor Documentation Form	
Appendix Q (Tax Credit Information)	
▪ Tax Credit Information Form	
Appendix R (Operational Resource Information)	
Appendix S (Intentionally Left Blank)	

Please provide an explanation/reason below for any information not checked off and included in the Proposal:

VERIFICATION

The undersigned, Amy J. Elliott, being duly sworn, deposes and says she is the Vice President of Regulatory and External Affairs for Kentucky Power, that she has personal knowledge of the matters set forth in the foregoing testimony and the information contained therein is true and correct to the best of her information, knowledge, and belief after reasonable inquiry.

Amy J. Elliott

Amy J. Elliott

Commonwealth of Kentucky)
) Case No. 2026-00324
County of Boyd)

Subscribed and sworn to before me, a Notary Public in and before said County and State, by Amy J. Elliott, on November 10, 2026.

Marilyn Michelle Caldwell
Notary Public

MARILYN MICHELLE CALDWELL
Notary Public
Commonwealth of Kentucky
Commission Number KYNP71841
My Commission Expires May 5, 2027

My Commission Expires May 5, 2027

Notary ID Number KYNP71841