COMMONWEALTH OF KENTUCKY

BEFORE THE PUBLIC SERVICE COMMISSION

In the Matter of:

The Electronic Application Of Kentucky Power Company For: (1) An Order Approving The Terms And Conditions Of The Electronic Service Agreement Between Kentucky Power Company And DB Long Hunts Data LLC, A Subsidiary Of TeraWulf, Inc. Pursuant To Tariff I.G.S.; (2) Authorization To Enter Into The Agreement; (3) And All Other Required Approvals And Relief	))))))))	Case No. 2026-00323

DIRECT TESTIMONY OF

AMY J. ELLIOTT

ON BEHALF OF KENTUCKY POWER COMPANY

DIRECT TESTIMONY OF
AMY J. ELLIOTT ON BEHALF OF
KENTUCKY POWER COMPANY
BEFORE THE PUBLIC SERVICE COMMISSION OF KENTUCKY

CASE NO. 2026-00323

TABLE OF CONTENTS

SECTION **PAGE**

I. CASE SUMMARY 1
II. INTRODUCTION 2
III. BACKGROUND 3
IV. PURPOSE OF TESTIMONY 4
V. THE MUSKIE DATA CAMPUS 5
VI. THE TERAWULF ESA 10
VII. CONCLUSION 17

EXHIBITS

EXHIBIT	DESCRIPTION
EXHIBIT AJE-1	TeraWulf Electric Service Agreement
EXHIBIT AJE-2	TeraWulf Letter of Agreement
EXHIBIT AJE-3	Muskie Data Campus Fact Sheet
EXHIBIT AJE-4	Muskie Data Campus Economic Benefits Summary
EXHIBIT AJE-5	TeraWulf Letter Requesting Separate Applications

DIRECT TESTIMONY OF
AMY J. ELLIOTT ON BEHALF OF
KENTUCKY POWER COMPANY
BEFORE THE PUBLIC SERVICE COMMISSION OF KENTUCKY

CASE NO. 2026-00323

I. CASE SUMMARY

Q. PLEASE SUMMARIZE THIS CASE.

A. Kentucky Power Company's ("Kentucky Power" or the "Company") economic development efforts over the past decade have focused on attracting new load to the service territory. Increased load allows the Company to spread the costs it prudently incurs to provide service more broadly, benefitting its existing customers. This case is about adding a new large load customer to the Company's service territory, the manner through which the Company will serve the new load, and the resulting benefits to Kentucky Power's existing customers.

Kentucky Power entered into an Amended and Restated Electric Service Agreement (Tariff I.G.S.) with DB Long Hunts Data LLC[1] on November 4, 2026 (the "TeraWulf ESA"). Under the TeraWulf ESA, Kentucky Power will provide 1,000 MW of capacity and energy to the Muskie Data Campus to be developed at the EastPark Industrial Park in Boyd and Greenup Counties. The TeraWulf ESA does not provide any discounts to TeraWulf and instead builds on the existing customer protections provided in the large load provisions of Tariff Industrial General Service ("Tariff I.G.S."). The TeraWulf ESA provides approximately $2.1 billion in customer benefits and avoided costs over the full term, including $100,000,000 in residential bill credits.

[1] DB Long Hunts Data LLC is a wholly owned subsidiary of TeraWulf Inc. ("TeraWulf"). Throughout my Direct Testimony, the customer taking service under the TeraWulf ESA is referred to as "TeraWulf."

At TeraWulf's request and to support financing and end-user negotiations, the Company is seeking Commission approval of the TeraWulf ESA in this case. In a separate case (Case No. 2026-00324), the Company is seeking Commission approval of its plan to provide the capacity and energy to meet its obligations under the TeraWulf ESA. In Case No. 2026-00324, Kentucky Power is seeking the necessary approvals for:

- a new natural gas-fired, combined-cycle generating facility at the site of the Company's existing Big Sandy Plant in Louisa, Lawrence County, Kentucky ("the Combined-Cycle Generation Project");
- a capacity purchase agreement between Kentucky Power and AEP Generation Resources Inc. (the "Bridge Capacity Agreement"); and
- a new 765/345kV substation in Boyd County, Kentucky (the "Venator Substation Project").

Each of these is necessary for the Company to provide service to the Muskie Data Campus and for the Company's existing customers to reap the benefits of the TeraWulf ESA.

This is a transformational moment for Kentucky Power, its customers, and the region. As described below, and throughout the Direct Testimonies of the Company's other witnesses in this case, the addition of the Muskie Data Campus is an opportunity to turn unprecedented new electric demand into long-term value for eastern Kentucky in the form of lower bills for residential customers, stronger electric infrastructure, new jobs and tax revenue, and additional private investment in the region Kentucky Power has served for generations.

II. INTRODUCTION

Q. PLEASE STATE YOUR NAME, POSITION, AND BUSINESS ADDRESS.

A. My name is Amy J. Elliott. I am the Vice President of Regulatory Services and External Affairs for Kentucky Power. My business address is 1645 Winchester Avenue, Ashland, Kentucky 41101.

III. BACKGROUND

Q. PLEASE SUMMARIZE YOUR EDUCATIONAL BACKGROUND AND BUSINESS EXPERIENCE.

A. In 2008, I joined Kentucky Power as part of the regulatory compliance group. Since then, I have held various leadership roles in the Company's Regulatory, External Affairs, and Customer Service departments. In my current role, I lead the Company's Regulatory, External Affairs, and Economic Development teams.

My educational background includes a Bachelor's degree in economics from Transylvania University, a Master's of Business Administration from the University of Massachusetts at Amherst, and completion of the Economic Development Institute at the University of Oklahoma.

Q. WHAT ARE YOUR PRINCIPAL AREAS OF RESPONSIBILITY WITH KENTUCKY POWER?

A. I am responsible for managing regulatory, economic development, and governmental affairs for Kentucky Power. The regulatory component includes planning and executing rate filings, as well as filings for certificates of public convenience and necessity ("CPCNs") and other regulatory matters before the Public Service Commission of Kentucky (the "Commission"). Much of the governmental affairs work I perform involves sharing Company and energy industry information with community and elected leaders. I also oversee and manage the Company's economic development efforts which include engaging in activities to retain or expand businesses within the Company's service territory.

Q. HAVE YOU PREVIOUSLY TESTIFIED IN ANY REGULATORY PROCEEDINGS?

A. Yes. Recently, I testified in Case No. 2026-00001, an application for a CPCN to construct a draft mechanical cooling tower at the Mitchell Plant. Previously, I testified in Case No. 2014-00396 and Case No. 2017-00179 which were both combined general rate cases and requests for amendments to the Company's Environmental Compliance Plan. Additionally, I filed testimony in seven periodic reviews of the Environmental Surcharge: Case No. 2014-00052, Case No. 2014-00322, Case No. 2015-00113, Case No. 2015-00280, Case No. 2016-00109, Case No. 2016-00336, and Case No. 2013-00444. I also testified before the Commission in two six-month reviews of the Company's fuel adjustment clause: Case No. 2013-00261 and Case No. 2013-00444. I also filed rehearing testimony in the Company's most recent rate case, Case No. 2025-00257, and have testified before Kentucky legislative committees on topics relating to the electric utility industry. I am testifying in Case No. 2026-00324 where the Company is seeking Commission approval of its plan to provide the capacity and energy to meet its obligations under the TeraWulf ESA.

IV. PURPOSE OF TESTIMONY

Q. WHAT IS THE PURPOSE OF YOUR TESTIMONY?

A. The purpose of my testimony is to provide an overview of the regulatory, financial, and practical considerations contained within Kentucky Power's Application. Specifically, my testimony will:

- Explain the importance of this case for the Company's customers and the eastern Kentucky region as a whole;

- Describe the TeraWulf ESA and Transmission Letter of Agreement ("LOA"), attached as Exhibits AJE-1 and AJE-2, respectively, and most importantly, lay out the benefits and protections for existing customers; and

- Explain the relationship between this case and Case No. 2026-00324 where the Company is seeking Commission approval of its plan to provide the capacity and energy to meet its obligations under the TeraWulf ESA.

Q. ARE YOU SPONSORING ANY EXHIBITS?

A. Yes, I am sponsoring the following Exhibits:

EXHIBIT	DESCRIPTION
EXHIBIT AJE-1	TeraWulf Electric Service Agreement
EXHIBIT AJE-2	TeraWulf LOA
EXHIBIT AJE-3	Muskie Data Campus Fact Sheet
EXHIBIT AJE-4	Muskie Data Campus Economic Benefits Summary
EXHIBIT AJE-5	TeraWulf Letter Requesting Separate Applications

Q. WERE THESE EXHIBITS PREPARED BY YOU OR UNDER YOUR DIRECTION?

A. Not entirely. Exhibits AJE-3, AJE-4, and AJE-5 were provided by TeraWulf. The remaining exhibits were prepared by me or under my direction.

V. THE MUSKIE DATA CAMPUS

Q. CAN YOU DESCRIBE THE MUSKIE DATA CAMPUS AND ITS IMPORTANCE TO THE REGION?

A. The Muskie Data Campus is a 1,000 MW data center that TeraWulf will develop at the EastPark Industrial Park in Boyd and Greenup Counties. The significance of the Muskie Data Campus to the region and Kentucky Power's customers cannot be overstated. The Muskie Data Campus represents one of the largest economic development opportunities in the history of eastern Kentucky and will be transformative for the region.

The Muskie Data Campus will inject billions of dollars directly into the Company's service territory. The Muskie Data Campus is expected to bring approximately $8.5 billion of investment, about 3,500 construction jobs, 350 to 500 permanent jobs between TeraWulf and its end-user, and more than $200 million annually in state and local taxes once fully operating, totaling about $4.8 billion in state and local taxes through construction and its first 20 years of operation. These estimates do not include the billions of dollars of additional investment in computing equipment and chip hardware that TeraWulf's end-user tenant will install. Importantly, TeraWulf has not sought any tax incentives in connection with the Muskie Data Campus. Copies of the fact sheet for the Muskie Data Campus and a summary of the economic benefits of the Muskie Data Campus are included as Exhibits AJE-3 and AJE-4, respectively.

Kentucky Power customers across the 20-county service territory will benefit from the TeraWulf ESA in the form of rate reductions and avoided costs. Through the large-load provisions of the Company's Tariff I.G.S. and the additional provisions of the TeraWulf ESA, the Company is able to ensure that providing service to the Muskie Data Campus will not increase rates paid by customers. As described in more detail below and in the testimony of Company Witness Vaughan, existing customers will see additional benefits from the Muskie Data Campus in two primary ways. First, the addition of the Muskie Data Campus load will result in lower rates for surcharges that allocate fixed costs based on a percentage revenue, primarily the Securitized Surcharge Rider ("SSR") and the Environmental Surcharge ("ES"). Second, the TeraWulf ESA obligates TeraWulf to provide $100,000,000 in residential bill credits during the winter heating months. Together,

these additional benefits are expected to result in an annual decrease in the revenue requirement for residential customers.

The Muskie Data Campus represents a transformational change to the Company's service territory. It is an opportunity to turn unprecedented new electric demand into long-term value for eastern Kentucky in the form of lower bills for residential customers, stronger electric infrastructure, new jobs and tax revenue, and additional private investment in the region Kentucky Power has served for generations.

Q. PLEASE DESCRIBE THE EASTPARK INDUSTRIAL PARK.

A. The EastPark Industrial Park is a 1,000-acre industrial park located at the junction of Boyd, Greenup, and Carter Counties near the intersection of Interstate 64 and Kentucky Route 67, and across from the Green Valley Landfill. This industrial park was previously mined for coal and has been largely vacant for about 30 years. The Muskie Data Campus will be constructed at roughly the same location where the now-abandoned Braidy Industries aluminum rolling mill was proposed.

Q. HAS KENTUCKY POWER INVESTED IN THE EASTPARK INDUSTRIAL PARK?

A. Yes. The EastPark Industrial Park is a prime example of Kentucky Power's long-term approach to economic development and site readiness. Kentucky Power and its economic development partners have invested in EastPark to improve the park's readiness and ability to compete for economic development projects. In 2015, EastPark was certified as an AEP/McCallum Sweeney Quality Site. In 2017, funding from the Kentucky Power Economic Growth Grant ("KPEGG") was used to complete additional due diligence studies that led to Kentucky Build-Ready certification. In 2018, KPEGG funded a gap

analysis to identify additional improvements needed at the park, and in 2020, KPEGG funding supported a new road to the Build-Ready site. These investments were made before TeraWulf identified EastPark for its planned Muskie Data Campus. Together, they helped address development barriers and improve the site's readiness for prospective projects. These efforts helped lay the groundwork to position EastPark to compete for significant economic development opportunities, including the Muskie Data Campus.

Q. CAN YOU EXPLAIN HOW THE COMPANY'S REQUESTS IN THIS CASE AND CASE NO. 2026-00324 WORK TOGETHER?

A. Yes. Between this case and Case No. 2026-00324, Kentucky Power seeks the necessary approvals for four items:

- the TeraWulf ESA;
- the Combined-Cycle Generation Project;
- the Venator Substation Project; and
- the Bridge Capacity Agreement.

The TeraWulf ESA is a special contract between Kentucky Power and TeraWulf that expands on the customer protections included in the large load provisions of the Company's Tariff I.G.S. Under the TeraWulf ESA, Kentucky Power will provide 1,000 MW of capacity and the related energy to the Muskie Data Center. The Muskie Data Center's load ramp begins in October 2028 and is expected to be at full load by October 2029. As described below and in more detail in Case No. 2026-00323, the TeraWulf ESA includes customer benefit provisions, including $100,000,000 in residential rate credits, unavailable under the large load provisions of the Company's Tariff I.G.S.

In Case No. 2026-00324, the Company seeks the necessary approvals for the Combined-Cycle Generation Project, the Venator Substation Project, and the Bridge

Capacity Agreement. These are the methods through which Kentucky Power will comply with its obligations to serve the Muskie Data Campus under the TeraWulf ESA. The Venator Substation Project is necessary to provide electrical service to the Muskie Data Campus at the necessary voltage. The Combined-Cycle Generation Project will provide efficient, dispatchable, baseload generation to serve the increased load on the Company's system. The Combined-Cycle Generation Project will be a "steel in the ground" generation asset in the Company's service territory. Because the Combined-Cycle Generation Project will not be in service until the second quarter of 2031, the Company must enter into the Bridge Capacity Agreement to provide the necessary capacity under the TeraWulf ESA in the interim.

Q. IF THE FOUR COMPONENTS OF THE COMPANY'S REQUEST ARE INTERRELATED, WHY IS THE COMPANY SEEKING APPROVAL OF THE TERAWULF ESA IN THIS SEPARATE CASE?

A. At TeraWulf's request, Kentucky Power is seeking approval of the TeraWulf ESA through a separate proceeding to expedite that decision. A letter from TeraWulf Co-founder and Chief Technology Officer, Nazar Khan, which details that regulatory approval of the contract is necessary to secure financing and finalize the arrangement between TeraWulf and its end user is provided as Exhibit AJE-5. Because Case No. 2026-00323 is a request for approval of a special contract where the Company is seeking approval within 30 days and the suspension period under KRS 278.190 is shorter than the statutory approval period for CPCNs in KRS 278.019, the separate case allows for the TeraWulf ESA to be approved sooner.

Q. ARE THERE OTHER WITNESSES WHO WILL BE OFFERING TESTIMONY IN SUPPORT OF KENTUCKY POWER'S APPLICATION?

A. Yes. Kentucky Power is also presenting the testimony of Alex E. Vaughan, Vice President – Regulated Pricing & Strategic Transactions for American Electric Power Service Corporation ("AEPSC"). Company Witness Vaughan will provide testimony regarding the TeraWulf ESA and the protections and benefits for existing customers included therein and the benefits of the TeraWulf ESA and the Company's infrastructure investments for all customers.

VI. THE TERAWULF ESA

Q. PLEASE SUMMARIZE THE HISTORY OF THE TERAWULF ESA.

A. Kentucky Power and TeraWulf began discussing a possible data center development in the Company's service territory in March 2026. Based on those discussions, Kentucky Power initiated a transmission study to assess available transmission capacity. In May 2026, following negotiations, TeraWulf and Kentucky Power executed an initial Electric Service Agreement under which Kentucky Power would initially serve 500 MW of load. The terms of the initial ESA mirrored the updated large-load provisions of Tariff I.G.S. The initial 500 MW will begin with a load ramp of 100 MW in October 2028.

In August 2026, TeraWulf and Kentucky Power began further negotiations to increase the load by an additional 500 MW load. The TeraWulf ESA is the result of those additional negotiations and fully incorporates the terms of the initial ESA. The TeraWulf ESA is a special contract that enhances the large load provisions already found in Tariff I.G.S. thus providing additional protections and benefits to the Company's existing customers.

Q. CAN YOU DESCRIBE THE LARGE LOAD PROVISIONS OF THE COMPANY'S TARIFF I.G.S.?

A. Yes. To meet its obligation to serve new large loads that locate within its service territory while also protecting existing customers, the Company updated Tariff I.G.S. in Case No. 2024-00305 to include the following additional requirements for customers adding new or incremental loads of 150 MW or more:

- a 20-year contract term with a five-year notice period for termination;
- a minimum monthly billing demand of at least 90% of the customer's highest established demand;
- a requirement to provide collateral equal to 24 times the customer's previous maximum monthly non-fuel bill, subject to review and adjustments;
- a one-time payment equal to five years of minimum billing in the event of permanent closure before the contract term expires; and
- a five-year notice requirement for reducing contract capacity, with exceptions for mutual agreement.

The Commission approved the Company's large-load tariff noting:

> The Commission further finds that the tariff provisions appropriately balance Kentucky Power's need to ensure financial stability when taking on large-load customers and the need to protect existing customers from potential stranded costs. The requirement for long-term contractual commitments and financial collateral provides necessary safeguards for both Kentucky Power and its customers while allowing Kentucky Power to maintain system reliability.[2]

While these types of provisions have become more common throughout the country as data center development continues to expand, Kentucky Power's large load provisions in Tariff I.G.S are among the most stringent. Additional details regarding the protections provided

[2] Order at 5, *In the Matter of: Electronic Tariff Filing Of Kentucky Power Company To Revise Its Industrial General Service Tariff*, Case No. 2024-00305) (Ky. P.S.C. Mar. 18, 2025).

in Kentucky Power's large load provisions and the TeraWulf ESA is provided in Company Witness Vaughan's Direct Testimony.

Q. DOES THE TERAWULF ESA INCLUDE ANY DISCOUNTS OR EXEMPTIONS FOR THE CUSTOMER?

A. No. In fact, the TeraWulf ESA goes well above tariff in many ways. TeraWulf will pay the full rate of the Company's Tariff I.G.S., with no discounts or exemptions. This agreement is designed to go above and beyond the tariff rates to provide meaningful benefits to Kentucky Power customers and further ensure that those existing customers do not bear the burden of the incremental costs associated with providing service to TeraWulf.

Q. HOW DOES THE TERAWULF ESA DIFFER FROM THE LARGE LOAD PROVISIONS OF TARIFF I.G.S.?

A. The TeraWulf ESA includes five provisions that differ from the standard large load provisions in Tariff I.G.S. These provisions:

- obligate TeraWulf to provide $100,000,000 in bill credits to the Company's residential customers;
- obligate TeraWulf to pay up to $465,000,000 in carrying charges on costs incurred by Kentucky Power during the construction of the Combined-Cycle Generation Project;
- establish a mechanism for energy pricing from the beginning of TeraWulf facility load ramp through the date the Combined-Cycle Generation Project is placed into service;
- provide for a variance from the full 20-year term for the second phase of the TeraWulf load ramp; and
- allow for a limited capacity reduction during the term not just arising from a facility closure.

Q. PLEASE SUMMARIZE THE IMPACT OF THESE PROVISIONS ON THE COMPANY'S EXISTING CUSTOMERS.

A. The provisions of the TeraWulf ESA provide additional meaningful benefits to existing customers in the following ways:

- $100,000,000 in residential bill credits payable by TeraWulf;
- lower rate billings for surcharges that allocate fixed costs based on a percentage revenue including the SSR and the ES;
- payment of up to $465,000,000 of carrying charges during the construction period of the Combined-Cycle Generation Project resulting in a lower cost asset and rate base when the plant goes into service in 2031; and
- use of a separate PJM subaccount during the period between when it begins taking service in October 2028 and when the Combined-Cycle Generation Project goes into service in April 2031, avoiding an increase in fuel costs during that period. Additionally, the TeraWulf ESA requires TeraWulf to pay Kentucky Power $17,000 per month to recover any costs associated with administering this PJM subaccount ensuring that TeraWulf pays for these incremental costs.

Company Witness Vaughan provides additional detail on each of these provisions in his Direct Testimony.

Q. PLEASE EXPLAIN HOW THE RESIDENTIAL BILL CREDITS WILL BE DISTRIBUTED TO CUSTOMERS?

A. Kentucky Power will apply these credits to residential customer bills in January, February, and March (for usage in December, January, and February) starting in 2029. The credit will be listed separately on residential bills and indicate that the credit is being provided by TeraWulf, or its end user.

Although it is not proposing a new tariff or requesting any approvals related to the residential bill credit in this case, the Company is exploring multiple options for the rate design of this credit as shown in Table AJE-1 below. The first option is a flat credit amount that would be applied evenly to each residential customer's bill. The second option is a mechanism that shapes the bill credit with usage, so that customers using the most energy receive the largest credit, rather than providing all residential customers with the same

amount of monthly bill credit. The final option is a hybrid approach that combines the flat credit and is still shaped by customer usage. This option balances customer impacts across varying levels of energy usage to align with the Company's new residential rate design that was approved in Case No. 2025-00257.

Table AJE-1

Residential Winter Bill Credits			
	Approximate Credit Amounts		
Customer Usage	Flat Credit	$0.015/per kwh	$10 flat credit + 0.0135/per Block 2 kWh
250 kWh	$25.84	$3.80	$10.00
500 kWh	$25.84	$7.50	$10.00
750 kWh	$25.84	$11.30	$12.00
1,000 kWh	$25.84	$15.10	$15.40
1,500 kWh	$25.84	$22.60	$22.20
2,000 kWh	$25.84	$30.20	$28.90
2,500 kWh	$25.84	$37.70	$35.70
3,000 kWh	$25.84	$45.30	$42.50
4,000 kWh	$25.84	$60.30	$56.00
5,000 kWh	$25.84	$75.40	$69.60

Q. WHEN WILL EXISTING CUSTOMERS BEGIN TO REALIZE THE LOWER RATE BILLINGS THAT THE TERAWULF ESA WILL PROVIDE?

A. The rate reductions for riders such as the SSR and ES will start when the Muskie Data Center begins to take service in October 2028. At that time, the calculation of those surcharge rates will be impacted by the increased load from the Muskie Data Campus.

Q. HAS THE COMPANY ESTIMATED WHAT THESE RATE SAVINGS WILL BE?

A. Yes. Company Witness Vaughan describes the estimated savings from the TeraWulf ESA in his Direct Testimony. These savings are summarized as follows:

Table AJE-2

	2029	2030	2031	2032
SSR Savings	$14,166,796	$21,383,843	$21,383,843	$21,383,843
ES Savings	$11,363,665	$17,152,701	$17,152,701	$17,152,701
GR Savings	$8,337,960	$12,997,665	$3,249,416	$-
Residential Bill Credits	$10,000,000	$10,000,000	$10,000,000	$10,000,000
Total Existing Customer Savings	$43,868,420	$61,534,209	$51,785,960	$48,536,544
Current Total Revenue	$734,884,728			
Average % Reduction to Overall Revenues *	6.0%	8.4%	7.0%	6.6%

*Class allocation has not been completed, and impacts are not to be interpreted as a specific rate decrease to a particular class of customers.

Q. HAS THE COMPANY ESTIMATED THE TOTAL BENEFIT OF THE TERAWULF ESA TO EXISTING CUSTOMERS?

A. Yes. While Kentucky Power has an obligation to serve customers within its service territory, the TeraWulf ESA allows Kentucky Power to provide service to the Muskie Data Campus in a manner that both protects and provides benefits to existing customers. Again, Company Witness Vaughan describes these benefits in more detail, but they are summarized below:

Table AJE-3

TeraWulf ESA Provisions	Life of Contract $
Avoided Return on and of CC Financing Charges	$ 1,302,095,123
Residential Bill Credits	$ 100,000,000
Transitional Energy - Fuel Cost Savings	$ 195,246,237
Total TeraWulf ESA Additional Benefits	$ 1,597,341,360
Standard Tariff Items	
SSR Savings	$ 334,924,435
ES Savings	$ 200,043,381
Total Standard Benefits	$ 534,967,816
Total Customer Benefits	**$ 2,132,309,176**

Q. HAS THE COMPANY EDUCATED CUSTOMERS AND COMMUNITIES ABOUT THE POTENTIAL BENEFITS OF ECONOMIC DEVELOPMENT AND LARGE LOAD GROWTH?

A. Yes. Kentucky Power has actively engaged customers and communities across our service territory to explain how economic development and large-load growth can benefit existing customers through greater rate stability and opportunities to reduce future rate increases.

Q. WHAT HAPPENS IF THE COMMISSION DOES NOT APPROVE THE ESA AS SIGNED OR MODIFIES IT?

A. If the Commission does not approve the TeraWulf ESA, Kentucky Power would still have the obligation to provide 500 MW of capacity and energy to the Muskie Data Center. This service would be provided under Tariff I.G.S. rates, but the additional customer benefits and protections that were included in the TeraWulf ESA would not be achieved.

VII. CONCLUSION

Q. DOES THIS CONCLUDE YOUR DIRECT TESTIMONY?

A. Yes. The Muskie Data Center and the investments necessary to provide service under the TeraWulf ESA present an opportunity to transform Kentucky Power's service territory for the better. The TeraWulf ESA provides considerable benefits to Kentucky Power's existing customers and should be approved.

EXHIBIT AJE-1

Electric Service Agreement

Kentucky Power Company
Amended and Restated Electric Service Agreement
Tariff I.G.S.

This Amended and Restated Electric Service Agreement (this "Contract") is entered into as of the Effective Date set forth below by and between Kentucky Power Company (the "Company") and DB Long Hunts Data LLC, a Delaware limited liability company (the "Customer"; each of the Company and the Customer individually a "Party" and, collectively, the "Parties"). Upon the date that this Contract is approved by the Kentucky Public Service Commission (the "Commission") in an order reasonably acceptable to both Parties (the "Commission Contract Approval Date"), this Contract will supersede in its entirety that Electric Service Agreement between the Company and DB Long Hunts Finance LLC, dated May 22, 2026 and subsequently assigned to the Customer (the "Original Contract"), and the Original Contract will have no further force or effect. Until the Commission Contract Approval Date, the Original Contract remains in full force and effect. This Contract amends, restates, and replaces in its entirety that certain Amended and Restated Electric Service Agreement between the Parties effective October 1, 2026, which was executed by the Parties but not submitted to the Commission (the "Prior Restated Contract"), and, effective as of the Effective Date, the Prior Restated Contract is superseded and will have no further force or effect.

For and in consideration of the mutual covenants and agreements contained in this Contract and the Tariff I.G.S. (as defined below), the Company and the Customer hereby agree as follows:

1. Terms not otherwise defined herein have the same meaning as those terms are given in the Company's standard Terms and Conditions of Service and approved tariff(s) (including Tariff Industrial General Service, the "Tariff I.G.S.").

2. The Company agrees to furnish to the Customer and the Customer agrees to take and purchase from the Company, subject to the terms of this Contract and the Company's standard Terms and Conditions of Service and the Tariff I G S , as regularly filed with the Commission, all the electric capacity and energy of the character specified in this Contract for the premises located at 105 S. Commerce Drive, located within Boyd and Greenup County, Kentucky, with an approximate center of the premises located at 38 401 , -82. 93 the "Premises"). The Customer intends to develop, construct and operate a high performance computing facility on the Premises (the "Facilit ") The Customer represents and warrants to the Company that the Customer or one of its commonly controlled affiliates has, and will have during the term of this Contract, good and valid title to, or a valid leasehold interest in, all of the real property that comprises such Premises

3. The Company's standard Terms and Conditions of Service and all applicable provisions of Tariff I.G.S. are binding on the Customer from the Effective Date, except as modified by this Contract Electric service shall be deemed to be available hereunder and billing under the Tariff I.G.S. shall begin when sufficient transmission and generation are both available to the Customer's Premises, whether or not Customer is actually consuming energy, but no earlier than October 13, 2028 for up to the first 500 MW to be provided under this Contract ("Phase One") and no earlier than July 31, 2029 for up to the second 500 MW to be provided under this Contract ("Phase Two") The Company will notify the Customer in writing as soon as reasonably practicable prior to the capacity start date of each Load Ramp Contract Capacity set forth in **Exhibit A** (each such additional date, a "Load Ramp Contract Capacity Start Date"), but, in each case, in no event less than thirty (30) days prior thereto. As set forth on **Exhibit A**, the estimated capacity start date for the first 100 MW of Load Ramp Contract Capacity is October 2028, with the subsequent Load Ramp Contract Capacity start dates following thereafter. As described on **Exhibit A**, the maximum contract capacity at the Premises is 1000 MW (the "Maximum Contract Capacity").

4. Electric service under Phase One shall be deemed to be available hereunder and billing under Tariff I.G.S. shall begin when sufficient transmission and generation are both available to the Customer's Premises, whether or not Customer is actually consuming energy, but no earlier than October 13, 2028 (the "Phase One In-Service Date"). Electric service under Phase Two shall be deemed to be available hereunder and billing under Tariff I.G.S. shall begin when sufficient transmission and generation are both available to the Customer's Premises, whether or not Customer is actually consuming energy, but no earlier than July 31, 2029 (the "Phase Two In-Service Date"). The Initial Contract Term for the Phase One first 500 MW will be twenty (20) years from the Phase One In-Service Date (the "Phase One Initial Contract Term"). The Initial Contract Term for the Phase Two second 500 MW will be fifteen (15) years from the Phase Two In-Service Date (the "Phase Two Initial Contract Term"). Upon expiration of the Phase One Initial Contract Term, service under this Contract for the corresponding 500 MW will automatically renew and continue unless the Customer provides the Company prior written notice of cancellation at least 42 months before the effective date of cancellation. Upon expiration of the Phase Two Initial Contract Term, service under this Contract for the corresponding 500 MW will automatically renew and continue unless the Customer provides the Company prior written notice of cancellation at least 42 months before the effective date of cancellation.

5. **Phase One Capacity Reduction Termination.**

   a. Customer may, without payment of any exit fee or any penalty, reduce its contract capacity for service after the first ten (10) years of the Phase One Initial Contract Term by up to 20%, in total, by giving the Company at least 42 months written notice prior to the beginning of the PJM Delivery Year for which the reduction is sought. For avoidance of doubt, written notice can be provided during the first ten years of the Phase One Initial Contract Term. Regardless of the number of notices provided, the total capacity reduction shall not exceed 20%, unless by mutual agreement of the Customer and Company, which the Company shall only grant in circumstances that are not detrimental to the Customer, the Company, and all other customers.

   b. For service during years eleven (11) through twenty (20) of the Phase One Initial Contract Term, Customer may terminate its contract or reduce its contract capacity beyond 20% by giving the Company at least 42 months written notice prior to the beginning of the PJM Delivery Year for which the reduction or termination is sought, subject to payment of a capacity reductio termination fee (the "Phase One Exit Fee"). For avoidance of doubt, written notice can be provided prior to year eleven of the Phase One Initial Contract Term. The Phase One Exit Fee shall be due and payable to the Company upon the effective date of contract termination or capacity reduction. The Phase One Exit Fee shall be calculated as the lesser of five (5) years or the remaining months of the Phase One Contract Term of expected minimum billing under Tariff I.G.S. in excess of the 20 allowed capacity reduction, minus the Customer's estimated reduction in allocated PJM LSE OATT transmission charges to the Company.

   c. After the Phase One Initial Contract Term there shall be no Phase One Exit Fee.

   d. The Company will use reasonable efforts, consistent with its obligations as a public utility, to mitigate the Phase One Exit Fee amount owed or paid by the Customer by evaluating the opportunity to assign the terminate reduced capacity to serve a new customer under Tariff I G.S., to expand service to existing customers under Tariff I.G.S., or otherwise secure offsetting expected revenues The remainder of any mitigating amounts owed to the Customer shall be delivered to the Customer, or its designated successor, after all outstanding balances have been resolved.

6. **Phase Two Capacity Reductions/Termination**.

a. Customer may, without payment of any exit fee or any penalty, reduce its contract capacity for service after the first ten (10) years of the Phase Two Initial Contract Term by up to 20% in total, by giving the Company at least 42 months written notice prior to the beginning of the PJM Delivery Year for which the reduction is sought. For avoidance of doubt, written notice can be provided during the first ten years of the Phase Two Initial Contract Term. Regardless of the number of notices provided, the total capacity reduction shall not exceed 20%, unless by mutual agreement of the Customer and Company, which the Company shall only grant in circumstances that are not detrimental to the Customer, the Company, and all other customers

b. For service during years eleven (11) through fifteen (15) of the Phase Two Initial Contract Term, Customer may terminate its contract or reduce its contract capacity beyond 20% by giving the Company at least 42 months written notice prior to the beginning of the PJM Delivery Year for which the reduction or termination is sought, subject to payment of a capacity reduction/termination fee (the "Phase Two Exit Fee"). For avoidance of doubt, written notice can be provided prior to year eleven of the Phase Two Initial Contract Term. The Phase Two Exit Fee shall be due and payable to the Company upon the effective date of contract termination or capacity reduction. The Phase Two Exit Fee shall be calculated as the lesser of five (5) years or the remaining months of the Phase Two Contract Term of expected minimum billing under Tariff I.G.S. in excess of the 20% allowed capacity reduction, minus the Customer's estimated reduction in allocated PJM LSE OATT transmission charges to the Company.

c. After the Phase Two Initial Contract Term there shall be no Phase One or Phase Two Exit Fee.

d. The Company will use reasonable efforts, consistent with its obligations as a public utility, to mitigate the Phase Two Exit Fee amount owed or paid by the Customer by evaluating the opportunity to assign the terminated/reduced capacity to serve a new customer under Tariff I.G.S., to expand service to existing customers under Tariff I.G.S., or otherwise secure offsetting expected revenues. The remainder of any mitigating amounts owed to the Customer shall be delivered to the Customer, or its designated successor, after all outstanding balances have been resolved.

7. To assist the Company in the efficient planning and operation of its system a coordination committee ("Coordination Committee") shall be established The Coordination Committee will include designated representatives of the Company and Customer. The Coordination Committee will meet at least quarterly where business plans, including the anticipated expansion or reduction in demand or energy usage of Customer, can be provided for the benefit of both Parties. Confidential information will be provided with appropriate safeguards. The Coordination Committee will have no authority over the management, operations or decision making of either Party.

8. The electric energy delivered pursuant to this Contract shall be alternating current at approximately 345,000 volts and shall be delivered to the Customer's substation located on Customer's Premises described herein, which shall constitute the point of delivery under this Contract. The said electric energy shall be delivered at reasonably close maintenance to constant potential and frequency, and

it shall be measured by a meter or meters owned and installed by the Company and located inside the Company's substation and metered at 345,000 volts.

9. Except as modified by this Contract, the Customer and the Company agree that the Customer will receive service under the Company's Tariff I.G.S. The Customer agrees to pay the Company monthly for electric capacity and energy delivered hereunder (including, as applicable, minimum monthly charges) at the rates and under the provisions of the Company's Tariff I.G.S., as long as that schedule is in effect, and subject to **Exhibit A** to this Contract. In the event that Tariff I.G.S. is replaced by a new or revised Tariff schedule incorporating different rates or provisions, or both, in each case as approved by the Commission, the Company and the Customer understand and agree that the Company will continue to provide service, and the Customer will continue to take service under this Contract subject to such changed provisions, and that the Customer will pay for such service at the new rates on and after the date such rates become effective.

10. Except as modified by this Contract, the Customer is subject to all Commission approved rates and terms and conditions of service under Tariff I.G.S. In addition, the Customer will be subject to the following terms and conditions to provide benefits and cost savings to the Company's existing customers:

    a. Transitional Energy Pricing. Beginning on the Phase One In-Service Date and continuing through the date that the Company's planned combined cycle generating plant to be located at the existing Big Sandy site ("Big Sandy Combined Cycle Project") is placed in service, Kentucky Power shall establish a separate PJM subaccount for the flow-through with no mark-up to Customer of all PJM energy and energy-related costs associated with energy purchased by the Company to serve the Customer's Facility. Customer shall pay, as a separate line item on its monthly bill, the difference between the fuel basing point included in the Tariff I.G.S. transmission voltage base rate energy charge and the total of the monthly PJM energy charges incurred for Customer's hourly load, plus an additional $17,000 per month for administrative fees This amount, positive or negative, shall be a substitute for the Customer's Fuel Adjustment Clause ("FAC") charge for the month, regardless of any purchase power adjustment or limitation within the FAC. Customer will not be responsible during this period of time for the Company's other FAC charges that will be based on the cost to serve other customers, nor will the Customer's PJM energy charges be included in the FAC rate to serve other customers After the date the Big Sandy Combined Cycle Project is placed in service, the Customer will pay the Company monthly for electric energy delivered hereunder at the rates and under the provisions of the Company's Tariff I.G.S Until the Big Sandy Combined Cycle Project is placed in service, the intent of this section is to serve the Customer's energy needs through PJM energy market purchases with no effect on other customers.

    b. Return on Life to Date Costs for Big Sandy Combined Cycle Project. After the Commission Contract Approval Date and the date the Commission issues a Certificate of Public the Convenience and Necessity ("CPCN") for the Big Sandy Combined Cycle Project, in an order reasonably acceptable to both Parties (the "Commission CPCN Approval Date"), the Customer agrees to pay the Company a quarterly carrying charge on costs incurred by the Company for the construction of the Big Sandy Combined Cycle Project ("Life to Date osts") up to a maximum amount of $465,366,377. Any carrying charges incurred prior to the later of the Commission Contract Approval Date or the Commission CPCN Approval Date, and any carrying costs in excess of the maximum amount, will be included in the Big Sandy Combined Cycle Project costs as allowance for funds used during construction ("AFUDC"). The quarterly carrying charge cost will be calculated as the sum for all months in the quarter of the monthly carrying charge. The monthly carrying charge will be calculated as the product of each month in the quarter's

Life to Date Costs, and one twelfth of the Company's Pre-Tax Weighted Cost of Capital ("Pre-Tax WACC"). As formula,

Monthly Carrying Charge Each Month in the Quarter's Life to Date Costs x 1 12 x Pre-Tax WACC.

The Company will send the Customer an invoice by the 10th day of the month following the end of the quarter, and payment will be due from the Customer to the Company within twenty (20) days of the date the invoice is received. This carrying charge cannot exceed the maximum amount of $465,366,377 and will cease when the Company places the Big Sandy Combined Cycle Project into service.

c. Residential Bill Credits. The Customer agrees to fund ten (10) years of residential bill credits in the total amount of one hundred million dollars ($100,000,000) ("Residential Bill Credits"). Payment from the Customer to the Company is due on December 1 of each year in the amounts set forth in **Exhibit C**. The Company will apply the Residential Bill Credits to customer bills in January, February and March (for usage in December, January, and February). The credit will be listed separately on residential bills and indicate that the credit is being provided by the Customer.

11. The Company shall promptly seek approval from the Commission of this Contract as a special contract. Customer agrees to support the Company's request for approval including through the timely provision of information necessary to support the request for approval. The contents of the Company's request for approval of this Contract shall be the in sole discretion of the Company.

12. The Customer's contract capacity under the Tariff I.G.S. is fixed at the contract capacity specified in **Exhibit A**. Customer's billing demand shall be determined by this Contract and Tariff I G S. If a time-of-day demand is available under the Tariff I.G.S. and is selected by the Customer, the reservation of the Contract Capacity shall be the peak period reservation of capacity and shall determine the minimum monthly billing demand.

13. The Company estimates that the work necessary to attain the Load Ramp Contract Capacity set forth in **Exhibit A** will be completed within twenty five (25) months following the Effective Date. The Company estimates that delivery of the Maximum Contract Capacity (1000 MW) set forth in Exhibit A will be possible within thirty-seven (37) months following the Effective Date. The Company may extend the target completion date as necessitated by events beyond its reasonable control or by changes to scope, schedule, and cost of work, unless otherwise prohibited by law or the Tariff I.G.S., and shall notify the Customer in writing of any such extension that exceeds thirty (30) days.

14. Except as provided in this Contract, the Customer must provide collateral, consistent with the Tariff I.G.S., for the Customer's payment obligation by the dates set forth and in the form and amount identified as "Security" on **Exhibit B**. If Customer fails to provide the Security as required herein, the Company shall have the right to immediately terminate this Contract and the Company shall have no liability to the Customer arising from or related to such termination. Company may comingle any cash held as part of the Security with other funds under its custody or control and will have no obligation to invest the funds. The Company may, by written Notice to the Customer, require the Customer to increase, replenish, or replace such Security from time to time if (i) the Company determines in its reasonable discretion that any remaining Security is not adequate, (ii) the bank issuing any Letter of Credit no longer maintains the Required Credit Rating set forth on **Exhibit B**, or (iii) any Guarantor no longer maintains the Required Credit Rating set forth on **Exhibit B**, in each case consistent with the Tariff I.G.S. and this Contract. The Customer must provide any such increase, replenishment, or replacement to the Company within ten (10) business

days of such written Notice. Any such increased, replenished or replacement Security must meet the criteria of this Contract and the Tariff I.G.S. If the Customer requests the modification or replacement of an existing Security during the Contract Term, the Company will consider any such request in good faith and within ten (10) business days of the Customer's written Notice thereof; provided, that any such modified or replacement Security meets the criteria of this Contract and the Tariff I.G.S. The Company has the right to draw upon or otherwise make use of the Security to pay the Customer's payment obligations under this Contract or the Tariff I.G.S. (including the Customer's obligation to pay minimum monthly charges) upon the occurrence of any default or breach under this Contract (or any applicable letter(s) of agreement for network or customer-specific investment prior to energization) for failed or delayed payment, insufficient Security, or that impacts energization or commencement or continuation of the Initial Contract Term.

15. Consistent with the requirement in Tariff I.G.S. and this Contract, the Company will, on an annual basis, recompute the amount of Security required from Customer to protect the Company's other customers. For purposes of recomputing Security, the terms and conditions to provide benefits and cost savings to the Company's existing customers under Section 10 (a) (c) will be excluded from the Customer's previous maximum monthly non-fuel bill under the Tariff I.G.S. collateral calculation. For each annual recompute, the Customer's previous maximum monthly non-fuel bill shall be determined over the twelve (12) months preceding the recompute date. The Company shall first recompute the amount of Security required on the date that is the first anniversary of the Phase One In-Service Date. The Company shall then recompute the amount of Security required on each anniversary thereafter. If the recomputed amount of Security is at least 10% greater than the then current amount of Security, Customer shall, within thirty (30) days of the date notice of the recomputed amount is provided to Customer provide additional Security such that the total Security equals the full recomputed amount. If the recomputed amount of Security is at least 10% less than the then current amount of Security, Company shall, within thirty (30) days of the date notice of the recomputed amount is provided to Customer, release or return Security such that the total Security held by the Company equals the reduced amount. If the Customer reduces its contract capacity by 50 MW or more, including a Phase One or Phase Two capacity reduction or termination as provided for under Sections 5 or 6, then the Security will be promptly recomputed each year thereafter to reflect 24 months of expected monthly maximum non-fuel billing, and the Company shall release or return any Security in excess of the recomputed amount within thirty (30) days. In the event that Tariff I.G.S. is amended such that the requirement to recompute the amount of Security required to protect customers is removed, the Company will continue to recompute the amount of Security required and the Company and Customer shall continue to increase or decrease the amount of Security required as set forth in this section Company will release or return the Security associated with Phase One or Phase Two within sixty (60) days after the termination date of either Phase One or Phase Two, respectively, unless there are outstanding claims, in which case, the applicable Security will be released or returned promptly after such outstanding claims are resolved.

16. There are no unwritten understandings or agreements between the Parties relating to the service described in this Contract. This Contract, together with the LOA and the Tariff I.G.S., constitutes the entire understanding and commitment of the Parties and supersedes all previous agreements relating to the delivery of energy by the Company at the Customer's Premises described above. This Contract shall be in full force and effect when last signed by the authorized representatives of the Parties below (the "Effective Date") If any provision of this Contract is invalid or unenforceable under any applicable law or the Tariff I G S , such provision will be deemed reformed or deleted, but only to the extent necessary to comply with such law or the Tariff I.G.S., and the remaining provisions of this Contract will remain in full force and effect. No waiver will constitute or be construed as a waiver of any other provision, and no waiver of a failure to comply with any provision of this Contract will constitute or be construed as a continuing waiver of that provision or as a waiver of any other failure to comply with any provision of this Contract. No

failure or delay on the part of any Party in the exercise of any right or remedy under this Contract will impair that right or remedy or be construed to be a waiver of, or acquiescence in, any breach of any provision of this Contract, nor will any single or partial exercise of any right or remedy preclude other or further exercise of that right or remedy, or of any other right or remedy. This Contract is governed by the laws of the State of Kentucky, without regard to any conflicts of law provisions. Nothing in this Contract divests or limits the jurisdiction of the Commission This Contract shall inure to the benefit of and be binding upon the successors and permitted assigns of the Parties. This Contract shall not be assigned or amended by either Party without the written consent of the other Party, and any assignment by one Party to this Contract shall not relieve that Party of its financial obligations hereunder unless the other Party to this Contract so consents in writing. Such consent shall not be unreasonably withheld or delayed. Notwithstanding the foregoing, it is expressly understood and agreed that the Customer may assign this Contract to any commonly controlled affiliate, provided, such assignee assumes all Customer obligations and liabilities hereunder and provides the Security required under this Contract prior to the assignment becoming effective.

17. This Contract does not create any additional obligations of the Company or its affiliates to plan, generate, transmit, or distribute electric service, or to plan or reserve generation, transmission, or distribution capacity, that does not otherwise exist at law or under the Tariff I.G.S Electric service will not commence until the Company has sufficient capacity and infrastructure to meet Company's and Customer's load requirements, which could be delayed by the applicable regional transmission organization, governmental authorities including but not limited to the Commission, third party transmission owners, providers, and systems, and events outside the Company's reasonable control. The Company shall use commercially reasonable efforts, consistent with the Tariff I.G S., good utility practice, and applicable law, to complete the work necessary to enable electric service as set forth in **Exhibit A**. The Company does not guarantee achievement of any estimated service date or the capacity contemplated during the Load Ramp Period set forth in **Exhibit A** or Initial Contract Term by a specific date, and the Company's obligations with respect to these matters are described solely in the Tariff I.G.S., this Contract, the LOA, and applicable law. The Company is permitted to disconnect the Customer at any time as permitted under the Tariff I.G.S., including (without limitation) with respect to any detection of any activities outside the Company's technical requirements, usage that impermissibly exceeds contracted capacity, receipt of false information, or otherwise as permitted under the Tariff I.G.S. or applicable law. The Company will make reasonable efforts to notify the Customer in advance of the occurrence of any event that could give rise to a disconnection and will work with Customer in good faith to resolve any such issues following a disconnection to enable reconnection of Customer in a matter consistent with the Company's technical requirements, the Tariff I G.S., this Contract, applicable law, and good utility practice. Electric Service to Customer shall be on a non-discriminatory basis consistent with the firm service provided to all other non-interruptible customers.

18. If, due to any change in applicable law or interpretation thereof by any court of law, the Commission, or governmental authority subsequent to the Effective Date, the performance of any provision of this Contract or any transaction contemplated hereby shall become impracticable or impossible, the Parties shall use their best efforts to find and employ an alternative means to achieve the same or substantially the same result as that contemplated by such provision and, if necessary, the Parties shall renegotiate the terms of this Contract in good faith to address the change in applicable law or interpretation thereof.

19. Each Party shall deliver all notices, requests, consents, claims, demands, waivers, and other communications under this Contract (each, a "Notice") in writing and addressed to the other Party at its physical address or email address set forth on the signature page of this Contract (or to such other address that the receiving Party may designate from time to time in accordance with this Section). Each Party shall deliver all Notices by personal delivery, nationally recognized overnight

courier (with all fees prepaid), email, or certified or registered mail (return receipt requested, postage prepaid). Except as otherwise provided in this Contract, a Notice is effective only (i) upon receipt by the receiving Party, and (ii) if the Party giving the Notice has complied with the requirements of this Section.

[*Remainder of page intentionally left blank. Signatures follow on next page.*]

The Customer and Company have executed this Contract through their duly authorized representatives as of the respective dates set forth below. The Effective Date is as defined in the Contract.

Kentucky Power Company

By: Cynthia Wiseman

Cynthia Wiseman

Title: President | COO

Date: November 4, 2026

Address: Kentucky Power Company
c/o American Electric Power Service Corporation
1 Riverside Plaza
Columbus, OH 43209
Email: ajelliott@aep.com

With a copy to: legalnotices@aep.com

DB Long Hunts Data LLC

By: Nazar M. Khan

Nazar Khan

Title: Chief Operating Officer &
Chief Technology Officer

Date: November 4, 2026

Address: DB Long Hunts Data LLC
9 Federal Street
Easton, MD 21601
Email: legal@terawulf.com

Exhibit A

Load Ramp Period, Load Ramp Contract Capacity, and Maximum Contract Capacity

Customer's Load Ramp Periods, Load Ramp Contract Capacity, and Maximum Contract Capacity (monthly peak load requirements for each month during the Phase One and Phase Two Initial Contract Terms after the Load Ramp Period) are set forth in the following tables:

Phase One

Load Ramp Period: October 2028 Load Ramp Contract Capacity (Month 1)	100 MW
Load Ramp Period: November 2028 Load Ramp Contract Capacity (Month 2)	200 MW
Load Ramp Period: December 2028 Load Ramp Contract Capacity (Months 3-4)	250 MW
Load Ramp Period: February 2029 Load Ramp Contract Capacity (Month 5)	350 MW
Load Ramp Period: March 2029 Load Ramp Contract Capacity (Month 6)	450 MW
Phase One Maximum Contract Capacity: April 2029 through Phase One Initial Contract Term (Months 7-240)	500 MW

Phase Two

Load Ramp Period: July 2029 Load Ramp Contract Capacity (Month 1)	150 MW
Load Ramp Period: August 2029 Load Ramp Contract Capacity (Month 2)	300 MW
Load Ramp Period: September 2029 Load Ramp Contract Capacity (Month 3)	450 MW
Phase Two Maximum Contract Capacity: October 2029 through Phase Two Initial Contract Term(Months 4-180)	500 MW

Exhibit B

Security

Customer will provide Security by the dates and in the amounts set forth in the following schedule:

Line No.	Due Date	Amount
1.	Provided at execution of Original Contract	$310,747,147.00
2.	Within sixty (60) days after the Commission Contract Approval Date	$125,105,402.00
	TOTAL	$435,852,549.00

Customer must provide the Security in one or more of the following forms:

A. One or more irrevocable, standby letters of credit with a minimum term of 360 days, substantially in the form and containing the provisions of the specimen attached as Attachment A, or with such other provisions from the issuing bank as agreed to and approved by the Company in its sole discretion (the "Letter of Credit"), issued from a U.S. commercial bank or the U.S. branch of a foreign bank that has and maintains a credit rating of at least A- from Standard and Poor's and an A3 credit rating from Moody's Investors Services (the "Required Credit Rating"). The Customer must cause the renewal or extension of the Letter of Credit for additional consecutive terms of 360 days or more no later than 30 days prior to each expiration date through the date the Customer has fully paid its obligations under the Contract. If the Letter of Credit is not renewed or extended as required herein, the Company will have the right to draw immediately upon the Letter of Credit and be entitled to hold the amounts so drawn as Security.

B. An irrevocable guaranty, substantially in the form and containing the provisions of the specimen attached as Attachment B, or with such other provisions as agreed to and approved by Company in its sole discretion (the "Guaranty"), from a guarantor that is the ultimate parent or a corporate affiliate of Customer, so long as the guarantor has and maintains the Required Credit Rating (the "Guarantor"). If the Customer desires to provide Security in the form of a Guaranty, the Customer shall provide financial information of the Guarantor requested by the Company from time to time, including annual audited financial statements for so long as the Guaranty is in effect.

Attachment A

FORM OF IRREVOCABLE STANDBY LETTER OF CREDIT

DATE OF ISSUANCE: _____

[Beneficiary: Company Name and Address]

RE: Credit No. _____

We hereby establish this Irrevocable Standby Letter of Credit (this "Letter of Credit") in your favor for the account of _____ (the "Account Party"), for the maximum aggregate amount not exceeding _____ United States Dollars ($_____) (the "Stated Amount"), available to you ("Beneficiary") for payment at sight upon demand by presentation made at our counters at (Location), or by internationally recognized courier, on or before the expiration hereof or any automatically extended expiration date, against presentation to us of a Demand for Payment, dated and signed by a representative of the Beneficiary (the "Demand for Payment"), substantially in the form attached hereto as Annex A.

No other document or statement shall be required, and the Issuing Bank shall not inquire into the underlying transaction or the accuracy of any information set forth in the Demand for Payment.

Partial and multiple drawings are permitted hereunder, and each drawing shall reduce the available balance of this Letter of Credit on a dollar-for-dollar basis.

We hereby agree with you that documents drawn under and in compliance with the terms of this Letter of Credit shall be final and conclusive and shall be duly honored upon presentation as specified.

This Letter of Credit shall be governed by the International Standby Practices, International Chamber of Commerce Publication No. 590 ("ISP98"), and additionally by the laws of the State of New York, without regard to conflicts of law principles, except to the extent that the terms hereof are inconsistent with the provisions of ISP98, in which case the terms of this Letter of Credit shall govern. The Issuing Bank shall have a reasonable amount of time, not to exceed three (3) banking days, following the date of its receipt of documents from the Beneficiary, to determine if a presentation is complying and to inform the Beneficiary thereof accordingly; failure to provide such notice within such time shall constitute acceptance of the presentation.

In the event of an Act of God, riot, civil commotion, insurrection, war or any other cause beyond our control that interrupts our business (collectively, an "Interruption Event") and causes the place for presentation of this Letter of Credit to be closed for business or otherwise unable to receive presentations on the last day for presentation, the expiry date of this Letter of Credit will be automatically extended without amendment to a date thirty (30) Calendar Days after the place for presentation is fully reopened and capable of honoring drawings.

It is a condition of this Letter of Credit that it will be automatically extended without amendment for one (1) year from the expiration date hereof, or any future expiration date, unless at least ninety (90) days prior to any expiration date we notify you by internationally recognized courier, with confirmation of receipt, that we elect not to consider this Letter of Credit renewed for any such period. Upon receipt of any such non-renewal notice, the Beneficiary shall have the right to draw up to the full Stated Amount prior to the then-current expiration date.

All commissions, expenses and charges incurred with this Letter of Credit, including issuance, drawing, negotiation, and reimbursement fees, are for the account of the Account Party, and no such fees shall be deducted from any drawing made by the Beneficiary.

The Beneficiary may assign the proceeds of this Letter of Credit without the consent of the Issuing Bank or the Account Party.

EXPIRY DATE: [_____, 202_]

[BANK SIGNATURE]

Annex A

DEMAND FOR PAYMENT

Date: _____

To: [Issuing Bank Name]

Re: Irrevocable Standby Letter of Credit No. _____ (the "Letter of Credit")

The undersigned, a duly authorized representative of the Beneficiary, hereby certifies that:

1. The Account Party has failed to pay amounts due and payable to the Beneficiary or its assigns; and

2. The amount demanded hereby does not exceed the available balance under the Letter of Credit.

Accordingly, the Beneficiary hereby demands payment in the amount of:

USD $_____

Payment instructions:
[Wire / payment details to be provided separately or upon request]

Beneficiary: _____
By: _____
Name: _____
Title: _____

Attachment B

FORM OF CORPORATE GUARANTY

GUARANTY

TO: [AEP Company Name] and its successors and assigns (collectively "Beneficiary")

FOR GOOD AND VALUABLE CONSIDERATION, the receipt and sufficiency of which are hereby acknowledged, and to induce Beneficiary to enter into a *[name of contract]* dated as of _____, as the same may be amended from time to time (the "Agreement"), with *[Customer name]*, a(n) _____ *[entity type and jurisdiction]* ("Debtor"), the undersigned _____ *[guarantor name]*, a(n) _____ *[entity type and jurisdiction]* ("Guarantor"), hereby irrevocably and unconditionally guarantees the due punctual and full payment of any and all obligations of the Debtor to the Beneficiary now or hereafter due pursuant to the Agreement or pursuant to Applicable Law (as defined in the Agreement) in connection with the activities of the parties under the Agreement (the "Guaranteed Obligations"). Upon any failure by the Debtor to pay any of the Guaranteed Obligations, the Guarantor agrees that it will forthwith on demand pay any amounts which the Debtor has failed to pay the Beneficiary, at the place and in the manner specified in the Agreement. This Guaranty is a guaranty of payment and not merely a guaranty of collection. The Guarantor agrees that the Beneficiary may resort to the Guarantor for payment of any of the Guaranteed Obligations, whether or not the Beneficiary shall have resorted to any collateral security, or shall have proceeded against any other obligor principally or secondarily obligated with respect to any of the Guaranteed Obligations. Guarantor reserves the right to assert defenses which the Debtor may have to payment of any Guaranteed Obligations other than defenses based on lack of capacity, lack of authorization, lack of due execution, illegality, or limitations of actions, or arising from the bankruptcy, insolvency, or similar proceeding of the Debtor and other defenses expressly waived hereby.

The Guarantor agrees that, in the event of the dissolution or bankruptcy of the Debtor, if such event shall occur at a time when any of the Guaranteed Obligations may not then be due and payable, the Guarantor will pay the Beneficiary forthwith the full amount which would be payable hereunder by the Guarantor if all such Guaranteed Obligations were then due and payable and in default.

The obligations of the Guarantor hereunder shall be unconditional and absolute and, without limiting the generality of the foregoing, shall not be released, discharged or otherwise affected by:

(A) any extension, renewal, settlement, compromise, waiver, discharge, or release in respect of any Guaranteed Obligations of the Debtor;

(B) the existence, or extent of, any release, exchange, surrender, non-perfection, or invalidity of any direct or indirect security for any of the Guaranteed Obligations;

(C) any modification, amendment, waiver, extension of or supplement to the Agreement or any of the Guaranteed Obligations agreed to from time to time by the Debtor and the Beneficiary;

(D) any change in the corporate existence (including its constitution, laws, rules, regulations or powers), structure or ownership of the Debtor or the Guarantor, or any insolvency, bankruptcy, reorganization or other similar proceeding affecting the Debtor or its assets, the Guarantor or any other guarantor of any of the Guaranteed Obligations;

(E) the existence of any claim, set-off, or other rights which the Guarantor may have at any time against the Debtor, the Beneficiary, or any other corporation or person, whether in connection herewith or in connection with any related or unrelated transaction; provided that nothing herein shall prevent the assertion of any such claim by separate suit or compulsory counterclaim if such claim, set off, or other right arose in connection with the Guaranteed Obligations.

(F) except as to applicable statutes of limitation, failure, omission, delay, waiver or refusal by Beneficiary to exercise, in whole or in part, any right or remedy held by Beneficiary with respect to the Agreement or any transaction under the Agreement; or

(G) any other circumstance that might otherwise constitute a defense available to, or a discharge of, any Debtor or any other individual, partnership, joint venture, corporation, association, trust or other enterprise that is a party to the Agreement, or any other agreement or instrument (including any guarantor) in respect of the Guaranteed Obligations, other than payment in full of the Guaranteed Obligations.

This Guaranty shall remain in full force and effect until the date on which the Debtor is entitled by the Agreement to a release of its Security provided thereunder. Such termination shall not release Guarantor from liability for any Guaranteed Obligations arising prior to the effective date of such termination (even if the amount of such Guaranteed Obligations is not then fully determined). If at any time any payment of any of the Guaranteed Obligations is rescinded or must be otherwise restored or returned upon the insolvency, bankruptcy, or reorganization of the Debtor, the Guarantor's obligations hereunder with respect to such payment shall be reinstated at such time as though such payment had not been made. If Debtor's assets or a major portion thereof are transferred to any other party or parties otherwise than by operation of law, and if Beneficiary enters into any transaction whereby such transferee or transferees become indebted to Beneficiary, this Guaranty, subject to all the other terms hereof, shall apply to any Guaranteed Obligations or balance of Guaranteed Obligations of such other transferee or transferees to Beneficiary.

The Guarantor irrevocably waives acceptance hereof, diligence, presentment, demand, protest, notice of dishonor, notice of any sale of collateral and any notice not provided for herein, and any requirement that at any time any person exhaust any right to take any action against the Debtor or its assets or any other guarantor or person. Guarantor further waives notice of the transactions between Beneficiary and Debtor, notice of the execution and delivery, amendment, extension, or renewal of any present or future instrument pertaining to the Guaranteed Obligations, notice of default by Debtor, and any other notice not expressly required by this Guaranty. Guarantor further consents, without further notice, to any extension

or extensions of the time or times of payment of said Guaranteed Obligations, or any portion thereof, and to any change in form or amount, or renewal at any time, of such Guaranteed Obligations, or any portion thereof, in each case up to an aggregate amount set forth below. Should any present or future Guaranteed Obligations incurred by Debtor not be paid when due or at the time to which the same may be extended, Beneficiary may proceed against Guarantor for such Obligations at any time, without notice and without any proceeding or action against Debtor.

Guarantor shall not exercise any rights which it may have or acquire by way of subrogation until all of the Guaranteed Obligations are paid in full to Beneficiary. Guarantor shall not enforce any right or receive any payment by way of subrogation until all of the Guaranteed Obligations then due shall have been paid in full and Beneficiary agrees to take at Guarantor's expense such steps as the Guarantor may reasonably request to implement such subrogation. If any amounts are paid to Guarantor in violation of the foregoing limitations, then such amounts shall be held in trust for the benefit of Beneficiary and shall forthwith be paid to Beneficiary by Guarantor to reduce the amount of outstanding Obligations, whether matured or unmatured.

In the event that acceleration of the time for payment of any amount payable by the Debtor under the Agreement is stayed upon the insolvency, bankruptcy or reorganization of the Debtor, all such amounts otherwise subject to acceleration or required to be paid upon an early termination pursuant to the terms of the Agreement shall nonetheless be payable by the Guarantor hereunder forthwith on demand by the Beneficiary.

The Guaranty shall be binding upon and inure to the benefit of the Beneficiary and its successors and assigns. Beneficiary may assign this Guaranty in its sole discretion. Guarantor may not assign its rights and obligations hereunder, whether by operation of law or otherwise, without the prior written consent of the Beneficiary which consent may be arbitrarily withheld, and any such purported assignment without such written consent will be void.

Except for increases in the aggregate amount of Guaranteed Obligations, no other provision of this Guaranty may be amended, supplemented, or modified, nor any of the terms and conditions hereof waived, except by a written instrument executed by the Guarantor and an authorized representative of the Beneficiary.

The rights, powers, remedies, and privileges provided in this Guaranty are cumulative and not exclusive of any rights, powers, remedies, and privileges provided by law and any other agreement.

Notwithstanding anything in this Guaranty to the contrary, Guarantor's liability under this Guaranty and the Beneficiary's right of recovery under the same shall be limited to an aggregate amount of _____ Dollars ($_____). In the event Beneficiary engages in litigation to enforce this Guaranty, Guarantor agrees to pay, in addition to any amounts of Debtor which Guarantor has otherwise guaranteed to pay hereunder, any and all costs and expenses incurred by Beneficiary (including reasonable attorney's fees) in enforcing this Guaranty provided Beneficiary is successful in such litigation.

Guarantor represents and warrants that:

(A) The Guarantor is duly organized, validly existing and in good standing under the laws of the jurisdiction of its incorporation and has full corporate power to execute, deliver and perform this Guaranty.

(B) The execution, delivery, and performance of the Guaranty have been and remain duly authorized by all necessary corporate action and do not contravene any provision of law or of the Guarantor's constitutional documents or any contractual restriction binding on the Guarantor or its assets.

(C) All consents, authorizations and approvals of, and registrations and declarations with, any governmental authority necessary for the due execution, delivery and performance of this Guaranty have been obtained and remain in full force and effect and all conditions thereof have been duly complied with, and no other action by and no notice to or filing with, any governmental authority is required in connection with the execution, delivery, or performance of this Guaranty.

(D) This Guaranty constitutes the legal, valid and binding obligation of the Guarantor enforceable against the Guarantor in accordance with its terms, subject, as to enforcement, to bankruptcy, insolvency, reorganization and other laws of general applicability relating to or affecting creditors' rights and to general equity principles.

All notices or communications to the other party may be sent via email and shall be followed in writing by registered or certified mail, or overnight delivery service to:

To Guarantor:

_____

Attn: _____

_____

_____

Email:

To Beneficiary:

[AEP Company]

c/o American Electric Power Service Corporation

Attn: Credit Risk Management

1 Riverside Plaza, 27th Floor

Columbus, OH 43215

Email: Columbus_Credit@aep.com

or such other address as each party shall from time to time specify.

If any provision of this Guaranty is found by a court of competent jurisdiction to be void, illegal or otherwise unenforceable in that jurisdiction, such provision, to the extent of its invalidity, shall be severed from this Guaranty and be ineffective in that jurisdiction; provided, however, that such finding shall not affect the validity, legality or enforceability of such provision in any other jurisdiction or the validity, legality or enforceability of any other provision of this Guaranty. THIS GUARANTY WILL BE GOVERNED BY AND CONSTRUED IN ACCORDANCE WITH THE LAWS OF THE STATE OF OHIO, WITHOUT REFERENCE TO CHOICE OF LAW DOCTRINE. Guarantor waives any right to trial by jury with respect to this Guaranty.

IN WITNESS WHEREOF, the Guarantor has caused this Guaranty to be duly executed as of the date set forth below.

(_____)

By: _____

Name:

Title:

Date:

Exhibit C

Residential Bill Credits

YEAR	Payment Date	Amount
1	December 1, 2028	$10,000,000.00
2	December 1, 2029	$10,000,000.00
3	December 1, 2030	$10,000,000.00
4	December 1, 2031	$10,000,000.00
5	December 1, 2032	$10,000,000.00
6	December 1, 2033	$10,000,000.00
7	December 1, 2034	$10,000,000.00
8	December 1, 2035	$10,000,000.00
9	December 1, 2036	$10,000,000.00
10	December 1, 2037	$10,000,000.00
	TOTAL	$100,000,000.00

EXHIBIT AJE-2

TeraWulf Letter Of Agreement

KENTUCKY POWER

An AEP Company

DB Long Hunts Data LLC
9 Federal Street
Easton, MD 21601

September 30, 2026

Dear Customer:

This Amended and Restated Letter of Agreement ("Agreement") is between DB Long Hunts Data LLC, a Delaware limited liability company ("Customer") and Kentucky Power Company ("Company") and is subject to Company's approved tariff(s) for electric service on file with the Kentucky Public Utilities Commission (the "Commission") (including Tariff Industrial General Service, the "Tariff I.G.S."). The "Effective Date" is the date this Agreement is signed by both parties. As of the Effective Date, this Agreement supersedes in its entirety the Letter of Agreement between the Company and DB Long Hunts Finance LLC, dated May 22, 2026 and subsequently assigned to the Customer ("Original Letter of Agreement"), and the Original Letter of Agreement has no further force or effect.

1. **Exhibit A; Scope of Work; Cost(s)**. Exhibit A describes and defines: (a) an estimate of the preliminary scope of Work to be completed according to the terms of this Agreement; (b) the estimated Cost of performing the Work; (c) Customer's applicable Facility related to the Work; (d) the nature of Customer's desired Electric Service for the Facility; and (e) the financial obligations of Customer (including CIAC Payment(s), Customer's Cost Limit, Security, and the method by which the Company will recover the Cost of the Work if Customer performs all its obligations under the Agreement). The actual scope, schedule, and Cost of the Work, and Customer's related financial obligations may change from that described on Exhibit A. Examples of factors that could cause such changes include: supply chain disruptions, regulatory processes, grid analyses, stability analyses, ISO/RTO analyses, local and/or system upgrades, and permit, siting, land right acquisition, and interconnection requirements. Company has no obligation under this Agreement to perform additional work to serve any expansion of the Facility or other development not contemplated by this Agreement. Company has no obligation to begin any Work dependent on a third-party study or regulatory consent or approval until the required study, consent, or approval is complete or otherwise satisfied.

Company may by Notice increase the Cost Limit (related to any change of the estimates and assumptions described on Exhibit A) by the lesser of 20% or $10 million, above which any increase requires the written approval of Customer with such approval not to be unreasonably withheld, conditioned, or delayed. Company shall provide reasonable documentation supporting any increase in the Cost Limit upon request by Customer. At Customer's request, no more frequently than quarterly, Company will provide Customer with an update of Costs incurred. "Cost(s)" means all costs and expenses whether internal or external related to the Work or any delay or cancelation, including for labor, materials, equipment, services, overtime, AFUDC, financing, overhead, taxes (including any tax "gross-up" or income tax component contribution of any CIAC Payment(s)), Customer allowances in lieu of CIAC Payment(s), noncancelable commitments, re-stocking, removal, demobilization, remobilization, suspension, termination, and cancelation.

2. **Target Completion Date**. Company estimates that the Work necessary to attain the Load Ramp set forth in Exhibit C will be completed within twenty-five (25) months following the Effective Date (the "Target Completion Date"). The Company estimates that delivery of the Full Anticipated Operational Capacity set forth in Exhibit A (1000 MW) will be possible within thirty-seven (37) months following the Effective Date. Company may extend the Target Completion Date as necessitated by events beyond its reasonable control or by changes to scope, schedule, and Cost of the Work, unless otherwise prohibited by law or the Tariff I.G.S., and shall notify Customer in writing of any such extension that exceeds thirty (30) days. Company shall promptly notify Customer in writing when each stage of the Load Ramp set forth in Exhibit C (100 MW, 200 MW, 250 MW, 350 MW, 450 MW, 500 MW, 650 MW, 800 MW, 950 MW, and 1000 MW) is complete.

3. **Company's Remedies**. Company may, at its option and by Notice, terminate this Agreement, delay the Target Completion Date, stop or delay any aspect of the Work, modify Customer's Load Ramp Schedule, require additional CIAC Payments consistent with the terms and conditions of the Tariff I.G.S., collect from Customer all or any portion of Costs incurred and not to exceed the Cost Limit described on Exhibit A, or pursue any other remedy available at law or under the Tariff I.G.S., if any of the following occur (each a "Cost Recovery Event"):

   a. Customer terminates this Agreement or delays or cancels the Facility for any reason;

   b. Customer materially breaches any provision of this Agreement, including any failure to pay any amount when due;

   c. Customer unreasonably withholds, conditions, or delays its written approval under Section 1 of any change in the Cost Limit;

   d. Customer does not execute an amendment to this Agreement necessary to perform the Work;

   e. Company reasonably determines (including based on Customer's statements, actions or inaction, public announcements, activity at the Facility, or any request to delay the Work or failure to recommence the Work following any agreed-upon delay) that Customer cannot receive the Electric Service at the Facility on the schedule, or at the

transmission capacity, contemplated by this Agreement for any reason (including due to delay or cancelation of construction of the Facility); or

f. Customer becomes insolvent, files, or has filed against it, a petition for voluntary or involuntary bankruptcy or pursuant to any other insolvency law, makes or seeks to make a general assignment for the benefit of its creditors, or applies for, or consents to, the appointment of a trustee, receiver, or custodian for a substantial part of its property or business.

The Company will use commercially reasonable efforts to mitigate Costs to be collected from Customer prior to invoicing for such Costs.

4. **CIAC Payment(s)**. Customer must pay Company the CIAC Payment(s) described on Exhibit A within 30 days of receipt of invoice. Company has no obligation to begin or continue the Work if any CIAC Payment is unpaid. The CIAC Payment(s) are based on the estimated Cost to complete the Work. Additional CIAC Payment(s) may be required, or excess CIAC Payment(s) refunded, based upon the actual Cost to complete the Work.

5. **Security**. Customer must provide security for Customer's payment obligation with respect to Costs in the form and amounts set forth as the "Security" on Exhibit B. Company may make use of Customer's CIAC Payments and Security to pay Customer's obligation for Costs, and invoice Customer for any deficiency (which Customer shall pay within thirty (30) days). Company shall return the Security to Customer within thirty (30) days after Customer has fully paid and performed its obligations under the Agreement; upon the Company's return of the Security to Customer, the Agreement shall automatically terminate. The amount of the Security is not an estimate of Costs that may be invoiced by Company and is not a fixed price for, or cap on, such Costs. Company may comingle any cash held as part of the Security with other funds under its custody or control and will have no obligation to invest the funds. Company may by written notice to Customer require Customer to increase, replenish, or replace the Security from time to time if Company determines in its reasonable discretion and in good faith that any remaining Security is not adequate to cover the Costs that Company then reasonably estimates could become payable pursuant to this Agreement, or the credit rating of the bank issuing any letter of credit or the creditworthiness of the guarantor is no longer reasonably acceptable to Company, in each case consistent with the Tariff I.G.S. and this Agreement. Customer must provide any such increase, replenishment, or replacement to Company within ten (10) business days of such written notice. Any such increased, replenished or replacement Security must meet the criteria of this Agreement and the Tariff I.G.S.. If Customer requests the modification or replacement of an existing Security, the Company will consider any such request in good faith and within ten (10) business days of the Customer's written notice thereof; provided, that any such modified or replacement Security meets the criteria of this Contract and the Tariff I.G.S..

6. **Land Rights**. Consistent with 807 KAR 5:006, Section 6, (A) Customer shall, at no cost to the Company and on terms reasonably acceptable to Company, provide Company with good and marketable fee simple title, free and clear of all liens, encumbrances, or other title defects, to any parcel of land that Customer owns and that Company, in its reasonable

discretion, determines is necessary or desirable for the construction, ownership, and ongoing operation and maintenance of a new substation or other facilities necessary for the Company to provide Electric Service to the Facility, and (B) Customer shall, at no cost to the Company and on terms reasonably acceptable to Company, provide Company with other land rights, located on property owned by Customer, that Company, in its reasonable discretion, determines are necessary or desirable to complete the Work including, but not limited to, easements and rights-of-way for access, utilities, and related facilities; and (C) Company will acquire other land rights that Company, in its reasonable discretion, determines are necessary for completion of the Work (and the ongoing ownership, operation and maintenance of a new substation and other facilities necessary for the Company to provide Electric Service to the Facility) including, but not limited to, easements, fee ownership, and rights-of-way for access, utilities, and related facilities (the "Land Rights"). In accordance with 807 KAR 5:006, Section 6 (3)(c), the cost of obtaining Land Rights shall be included in the total per foot cost of the Project and shall be apportioned among the utility and the customer in accordance with 807 KAR 5:041, to the extent it is applicable. Company may delay the Work or, following reasonable, good faith consultation with Customer, terminate this Agreement if the Land Rights cannot be acquired on terms reasonably acceptable to Company, provided the Company has used commercially reasonable efforts to obtain such rights.

7. **Additional Customer Obligations**. Customer must perform, at no cost to Company, the additional Customer work described on Exhibit A when reasonably requested by Company. Customer must perform its work in accordance with Company's connection requirements and all applicable laws, rules, and regulations, and subject to required regulatory consents and approvals. Other parties may have lines and/or equipment that utilize Company's poles or other facilities, and Company is not responsible for any installation, relocation, or removal of lines and/or equipment owned by such third parties. Each such third party is responsible for its own equipment and schedule considerations to install, remove, or relocate such equipment. Any fees charged, or costs incurred, by other parties are the responsibility of Customer. Customer is responsible for contacting such third parties, as identified by Company, and arranging for any work that must reasonably be completed to facilitate this Agreement.

8. **Cooperation**. Customer must meet with Company as reasonably requested and provide Company with any requested information that is reasonably necessary to schedule and perform the Work. At Customer's request, Company must provide Customer with status updates regarding the Company's performance of the Work. Company must promptly notify Customer in writing of any known or anticipated circumstances that could reasonably be expected to delay the Target Completion Date.

9. **Ownership/Use of Work**. All facilities installed by Company in performing the Work will be owned, maintained, and controlled solely by Company or its affiliate. Customer will have no ownership or control of such facilities by virtue of the payment of any CIAC Payment or other reimbursement of Costs. Company and its affiliates expressly retain the right to use such facilities for any appropriate purposes under good utility practices, including electric service to other customers.

10. **Performance Standards/Disclaimer of Warranties**. The Work will be performed using good accepted engineering practices and in accordance with applicable laws, rules, and regulations, including RTO/ISO requirements and the Commission's rules and orders, and subject to required regulatory consents and approvals. Except for the foregoing, **COMPANY DISCLAIMS ON BEHALF OF ITSELF AND ITS AFFILIATES ALL EXPRESS OR IMPLIED WARRANTIES, INCLUDING WARRANTIES OF MERCHANTABILITY, FITNESS FOR A PARTICULAR PURPOSE, OR GOOD AND WORKMANLIKE PERFORMANCE.** This Agreement does not create any additional obligations of Company or its affiliates to plan, generate, transmit, or distribute electric service, or to plan or reserve generation, transmission, or distribution capacity, that does not otherwise exist at law or under the Tariff I.G.S..

11. **Limitation of Liability**. **COMPANY, ITS AFFILIATES, AND ITS AND THEIR OFFICERS, DIRECTORS, MANAGERS, EMPLOYEES, AND CONTRACTORS WILL NOT BE LIABLE FOR ANY LOSS RELATED TO: INSUFFICIENT TRANSMISSION CAPACITY, CURTAILMENT OF ELECTRIC SERVICE, INSUFFICIENT GENERATION SERVICE, ANY DELAY CAUSED BY THIRD PARTIES, OR ANY SPECIAL, INDIRECT, INCIDENTAL, CONSEQUENTIAL, PUNITIVE, OR EXEMPLARY DAMAGES (INCLUDING ECONOMIC OR COMMERCIAL LOSSES, LOSS OF PROFIT OR REVENUE, LOSS OF USE OF EQUIPMENT, COST OF CAPITAL, OR DAMAGE TO REPUTATION OR RELATIONS) RELATED TO THIS AGREEMENT OR THE PERFORMANCE OR FAILURE TO PERFORM THE WORK DESCRIBED HEREIN, WHETHER BASED IN CONTRACT, TORT, STRICT LIABILITY, STATUTORY LIABILITY, OR ANY OTHER THEORY OF LIABILITY.**

CUSTOMER, ITS AFFILIATES AND ITS AND THEIR OFFICERS, DIRECTORS, MANAGERS, EMPLOYEES, AND CONTRACTORS WILL NOT BE LIABLE FOR ANY SPECIAL, INDIRECT, INCIDENTAL, CONSEQUENTIAL, PUNITIVE, OR EXEMPLARY DAMAGES (INCLUDING ECONOMIC OR COMMERCIAL LOSSES, LOSS OF PROFIT OR REVENUE, LOSS OF USE OF EQUIPMENT, COST OF CAPITAL, OR DAMAGE TO REPUTATION OR RELATIONS) RELATED TO THIS AGREEMENT, WHETHER BASED IN CONTRACT, TORT, STRICT LIABILITY, STATUTORY LIABILITY, OR ANY OTHER THEORY OF LIABILITY.

12. **Nature of Work**. In performing the Work, Company is making modifications and additions solely to its own electric system, in accordance with the Tariff I.G.S., in response to Customer's request for Electric Service. Company is not performing any work on any facilities or equipment owned, or to be owned, by Customer. This Agreement does not address or in any way limit the generation supply options that may be used to provide Electric Service to Customer. No provision contained in this Agreement and no action on the part of any of the parties hereto may be construed as creating an employer/employee relationship, joint venture, or any other relationship other than that of regulated electric utility and customer. Nothing contained herein may be construed as a waiver or

relinquishment by Company of any right it has or may hereafter have to discontinue Electric Service for default in the payment of any invoice owing or to become owing hereunder or for any reason or cause allowed by law or the Tariff I.G.S.

13. **Load Ramp**. Company and Customer agree upon the Load Ramp Schedule to achieve the Facility's anticipated Full Operating Capacity described on Exhibit C (the "Load Ramp Schedule"). The Load Ramp Schedule outlined in Exhibit C of this Agreement relates solely to the transmission infrastructure necessary to provide Electric Service to Customer. If requested in writing by Company, Customer agrees to provide periodic updates to the Load Ramp Schedule. Company and Customer acknowledge that any change to the scope, schedule, or Cost of Work, this Agreement, or other changes outside the reasonable control of either party may impact the Load Ramp Schedule, including anticipated Full Operating Capacity, and Company has no obligation under this Agreement to achieve the Load Ramp Schedule or Full Operating Capacity or reserve or plan related generation, transmission, or distribution capacity.

14. **Amendments/Modifications**. No amendment or modification of this Agreement will be valid and binding unless made in writing and signed by the respective authorized representatives of Company and Customer.

15. **Notice**. Each party shall deliver all notices, requests, consents, claims, demands, waivers, and other communications under this Agreement (each, a "Notice") in writing and addressed to the other party at its physical address or email address set forth on the signature page of this Agreement (or to such other address that the receiving party may designate from time to time in accordance with this section). Each party shall deliver all Notices by personal delivery, nationally recognized overnight courier (with all fees prepaid), email, or certified or registered mail (return receipt requested, postage prepaid). Except as otherwise provided in this Agreement, a Notice is effective only: (a) upon receipt by the receiving party, and (b) if the party giving the Notice has complied with the requirements of this section.

16. **Miscellaneous**. This Agreement, together with all applicable provisions of the Tariff I.G.S., the Electric Service Agreement between the parties, dated May 22, 2026, and the Amended and Restated Electric Service Agreement between the parties, dated of even date herewith, constitutes the entire understanding and commitment of the parties and supersedes all prior offers, negotiations, and agreements relative to the subject matter hereof. Neither party shall assign or amend this Agreement without the prior written consent of the other party, it being expressly understood and agreed that Customer may assign this Agreement to any commonly controlled affiliate, provided, that such assignee assumes all Customer obligations and liabilities hereunder and provides the Security required under this Agreement prior to the assignment becoming effective. Any assignment in violation of this section is null and void. If any provision of this Agreement is invalid or unenforceable under any applicable law or the Tariff I.G.S., such provision will be deemed reformed or deleted, but only to the extent necessary to comply with such applicable law or the Tariff I.G.S., and the remaining provisions of this Agreement will remain in full force and effect. No waiver will constitute or be construed as a waiver of any other

provision, and no waiver of a failure to comply with any provision of this Agreement will constitute or be construed as a continuing waiver of that provision or as a waiver of any other failure to comply with any provision of this Agreement. No failure or delay on the part of any party in the exercise of any right or remedy under this Agreement will impair that right or remedy or be construed to be a waiver of, or acquiescence in, any breach of any provision of this Agreement, nor will any single or partial exercise of any right or remedy preclude other or further exercise of that right or remedy, or of any other right or remedy. This Agreement is governed by the laws of the state of where the Facility is located, without regard to any conflicts of laws provisions.

[Signature Page Follows]

The Customer and Company have executed this Agreement through their duly authorized representatives as of the respective dates set forth below. The Effective Date is as defined in the Agreement.

KENTUCKY POWER COMPANY

By: _____

Name: Cynthia Wiseman

Title: President & COO

Date: 10/1/2026

Address for Notice:
Kentucky Power Company
c/o American Electric Power Service Corporation
1 Riverside Plaza
Columbus, OH 43209
ajelliott@aep.com

With a copy to: legalnotices@aep.com

DB LONG HUNTS DATA LLC

By: _____

Name: Nazar Khan

Title: Chief Technology Officer

Date: September 30, 2026

Address for Notice:
9 Federal Street
Easton, MD 21601
legal@terawulf.com

With a copy to: mkurtz@BKLlawfirm.com

EXHIBIT A

Facility: Project Panda Data Center campus at EastPark, Ashland, KY

Facility's Anticipated Full Operating Capacity: 1000 MW

Electric Service: 345 kV transmission service, stepped down from 765 kV network. Metered at 345 kV. Requested in-service date the fourth quarter of 2028 for initial load ramp shown in Exhibit C.

Work (including attached one-line diagram):

Scope*	**Estimated Cost**
Station	
Engineering and Project Management	$6,711,660
Material	$193,394,793
Construction	$69,060,464
AFUDC	$15,643,737
T-Line	
Cut in/out 0.01mile SC existing Baker-Hanging Rock 765kV Line (assume 2 Lattice Tower DE Strs)	
Material	$950,000
Engineering	$350,000
Labor	$2,550,000
Build new two 3.5 mile SC customer station 345kV line	
Material	$7,875,000
Engineering	$3,150,000
Labor	$20,475,000
Total	$320,160,654

*The scope of Work does not include additional local upgrades or system upgrades that may be identified by more detailed grid analyses and modeling. Such local or system upgrades may include upgrades to facilities owned by, and require coordination with, third-party transmission owners, providers, and systems, and may be subject to review, modification, and approval by the applicable ISO/RTO and the Commission. Such local or system upgrades may cause delays to the Target Completion Date or changes to the anticipated transmission capacity necessary to provide Electric Service.

Company has determined the scope of Work and estimated Cost based on the following assumptions, which if incorrect may require adjustments to Customer's obligations:

Construct approximately 3.5 miles for two 345kV lines on separate monopole structures to serve new Customer station. Customer to help provide station site and ROW as needed to route line to final location.
All CPCN filings required for the Work must be completed before construction begins.
Design as set forth in the one-line diagram below.

CIAC Payment: $0

Cost Limit: $320,160,654

Recovery of Costs: Provided the Customer performs all its obligations under the Agreement, the Company will recover the Costs of the Work (estimated at $320,160,654) through applicable state and federal tariffs.

Customer Work:

Provide necessary Land Rights on Customer-owned property and site access for completion of the Work.

Project System Electrical Diagram

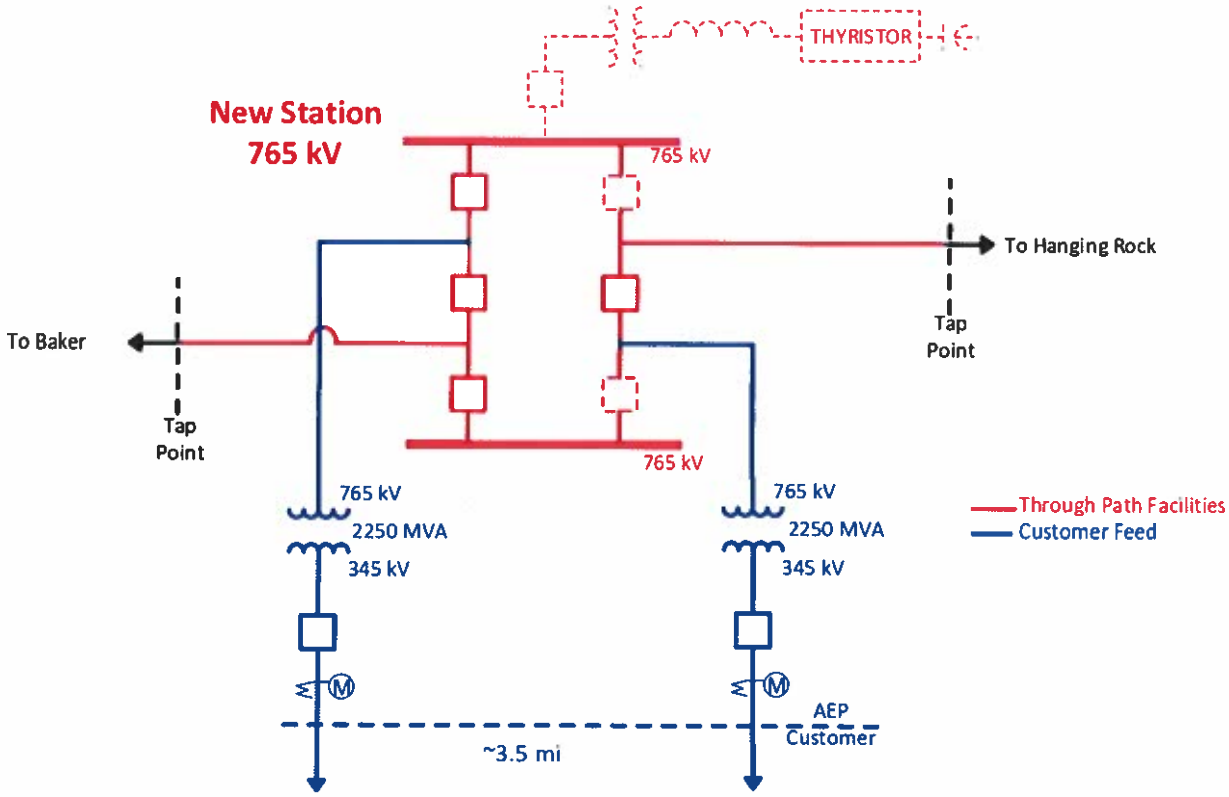

EXHIBIT B

Customer will provide Security by the dates and in the amounts set forth in the following schedule:

Line No.	Due Date	Amount (each line is an additional incremental Security amount)
1.	Provided at execution of Original Letter of Agreement	$50,000,000.00
2.	Due 12/30/2026	$50,000,000.00
3.	Due 09/30/2027	$50,000,000.00
4.	Due 03/31/2028	$50,000,000.00
5.	Due 09/30/2028	$120,160,645.00
	Cumulative Total Security	$320,160,645.00

Customer must provide the Security in one or more of the following forms:

A. One or more irrevocable standby letters of credit with a minimum term of 360 days, substantially in the form and containing the provisions of the specimen attached as Attachment A, or with such other provisions from the issuing bank as agreed to and approved by Company in its sole discretion, issued from a U.S. commercial bank or the U.S. branch of a foreign bank (the "Letter of Credit") that has and maintains a credit rating of at least A- from Standard and Poor's and an A3 credit rating from Moody's Investors Services (the "Required Credit Rating"). The Customer must cause the renewal or extension of the Letter of Credit for additional consecutive terms of 360 days or more no later than 30 days prior to each expiration date through the date the Customer has fully paid its obligations under the Contract. If the Letter of Credit is not renewed or extended as required herein, the Company will have the right to draw immediately upon the Letter of Credit and be entitled to hold the amounts so drawn as Security.

B. An irrevocable guaranty, substantially in the form and containing the provisions of the specimen attached as Attachment B, or with such other provisions as agreed to and approved by Company in its sole discretion (the "Guaranty"), from a guarantor that is the ultimate parent or a corporate affiliate, so long as the guarantor has and maintains the Required Credit Rating (the "Guarantor"). If the Customer desires to provide Security in the form of a Guaranty, the Customer shall provide financial information of the Guarantor as reasonably requested by the Company from time to

time, including annual audited financial statements, for so long as the Guaranty is in effect.

Attachment A

FORM OF IRREVOCABLE STANDBY LETTER OF CREDIT

DATE OF ISSUANCE: _____

[Beneficiary: Company Name and Address]

RE: Credit No. _____

We hereby establish this Irrevocable Standby Letter of Credit (this "Letter of Credit") in your favor for the account of _____ (the "Account Party"), for the maximum aggregate amount not exceeding _____ United States Dollars ($_____) (the "Stated Amount"), available to you ("Beneficiary") for payment at sight upon demand by presentation made at our counters at (Location), or by internationally recognized courier, on or before the expiration hereof or any automatically extended expiration date, against presentation to us of a Demand for Payment, dated and signed by a representative of the Beneficiary (the "Demand for Payment"), substantially in the form attached hereto as Annex A.

No other document or statement shall be required, and the Issuing Bank shall not inquire into the underlying transaction or the accuracy of any information set forth in the Demand for Payment.

Partial and multiple drawings are permitted hereunder, and each drawing shall reduce the available balance of this Letter of Credit on a dollar-for-dollar basis.

We hereby agree with you that documents drawn under and in compliance with the terms of this Letter of Credit shall be final and conclusive and shall be duly honored upon presentation as specified.

This Letter of Credit shall be governed by the International Standby Practices, International Chamber of Commerce Publication No. 590 ("ISP98"), and additionally by the laws of the State of New York, without regard to conflicts of law principles, except to the extent that the terms hereof are inconsistent with the provisions of ISP98, in which case the terms of this Letter of Credit shall govern. The Issuing Bank shall have a reasonable amount of time, not to exceed three (3) banking days, following the date of its receipt of documents from the Beneficiary, to determine if a presentation is complying and to inform the Beneficiary thereof accordingly; failure to provide such notice within such time shall constitute acceptance of the presentation.

In the event of an Act of God, riot, civil commotion, insurrection, war or any other cause beyond our control that interrupts our business (collectively, an "Interruption Event") and causes the place for presentation of this Letter of Credit to be closed for business or otherwise unable to receive presentations on the last day for presentation, the expiry date of this Letter of Credit will be automatically extended without amendment to a date thirty (30) Calendar Days after the place for presentation is fully reopened and capable of honoring drawings.

It is a condition of this Letter of Credit that it will be automatically extended without amendment for one (1) year from the expiration date hereof, or any future expiration date, unless at least ninety (90) days prior to any expiration date we notify you by internationally recognized courier, with confirmation of receipt, that we elect not to consider this Letter of Credit renewed for any such period. Upon receipt of any such non-renewal notice, the Beneficiary shall have the right to draw up to the full Stated Amount prior to the then-current expiration date.

All commissions, expenses and charges incurred with this Letter of Credit, including issuance, drawing, negotiation, and reimbursement fees, are for the account of the Account Party, and no such fees shall be deducted from any drawing made by the Beneficiary.

The Beneficiary may assign the proceeds of this Letter of Credit without the consent of the Issuing Bank or the Account Party.

EXPIRY DATE: [_____, 202_]

[BANK SIGNATURE]

Annex A

DEMAND FOR PAYMENT

Date: _____

To: [Issuing Bank Name]

Re: Irrevocable Standby Letter of Credit No. _____ (the "Letter of Credit")

The undersigned, a duly authorized representative of the Beneficiary, hereby certifies that:

1. The Account Party has failed to pay amounts due and payable to the Beneficiary or its assigns; and

2. The amount demanded hereby does not exceed the available balance under the Letter of Credit.

Accordingly, the Beneficiary hereby demands payment in the amount of:

USD $_____

Payment instructions:
[Wire / payment details to be provided separately or upon request]

Beneficiary: _____
By: _____
Name: _____
Title: _____

Attachment B

FORM OF CORPORATE GUARANTY

GUARANTY

TO: [AEP Company Name] and its successors and assigns (collectively "Beneficiary")

FOR GOOD AND VALUABLE CONSIDERATION, the receipt and sufficiency of which are hereby acknowledged, and to induce Beneficiary to enter into a *[name of contract]* dated as of _____, as the same may be amended from time to time (the "Agreement"), with *[Customer name]*, a(n) _____ *[entity type and jurisdiction]* ("Debtor"), the undersigned _____ *[guarantor name]*, a(n) _____ *[entity type and jurisdiction]* ("Guarantor"), hereby irrevocably and unconditionally guarantees the due punctual and full payment of any and all obligations of the Debtor to the Beneficiary now or hereafter due pursuant to the Agreement or pursuant to Applicable Law (as defined in the Agreement) in connection with the activities of the parties under the Agreement (the "Guaranteed Obligations"). Upon any failure by the Debtor to pay any of the Guaranteed Obligations, the Guarantor agrees that it will forthwith on demand pay any amounts which the Debtor has failed to pay the Beneficiary, at the place and in the manner specified in the Agreement. This Guaranty is a guaranty of payment and not merely a guaranty of collection. The Guarantor agrees that the Beneficiary may resort to the Guarantor for payment of any of the Guaranteed Obligations, whether or not the Beneficiary shall have resorted to any collateral security, or shall have proceeded against any other obligor principally or secondarily obligated with respect to any of the Guaranteed Obligations. Guarantor reserves the right to assert defenses which the Debtor may have to payment of any Guaranteed Obligations other than defenses based on lack of capacity, lack of authorization, lack of due execution, illegality, or limitations of actions, or arising from the bankruptcy, insolvency, or similar proceeding of the Debtor and other defenses expressly waived hereby.

The Guarantor agrees that, in the event of the dissolution or bankruptcy of the Debtor, if such event shall occur at a time when any of the Guaranteed Obligations may not then be due and payable, the Guarantor will pay the Beneficiary forthwith the full amount which would be payable hereunder by the Guarantor if all such Guaranteed Obligations were then due and payable and in default.

The obligations of the Guarantor hereunder shall be unconditional and absolute and, without limiting the generality of the foregoing, shall not be released, discharged or otherwise affected by:

(A) any extension, renewal, settlement, compromise, waiver, discharge, or release in respect of any Guaranteed Obligations of the Debtor;

(B) the existence, or extent of, any release, exchange, surrender, non-perfection, or invalidity of any direct or indirect security for any of the Guaranteed Obligations;

(C) any modification, amendment, waiver, extension of or supplement to the Agreement or any of the Guaranteed Obligations agreed to from time to time by the Debtor and the Beneficiary;

(D) any change in the corporate existence (including its constitution, laws, rules, regulations or powers), structure or ownership of the Debtor or the Guarantor, or any insolvency, bankruptcy, reorganization or other similar proceeding affecting the Debtor or its assets, the Guarantor or any other guarantor of any of the Guaranteed Obligations;

(E) the existence of any claim, set-off, or other rights which the Guarantor may have at any time against the Debtor, the Beneficiary, or any other corporation or person, whether in connection herewith or in connection with any related or unrelated transaction; provided that nothing herein shall prevent the assertion of any such claim by separate suit or compulsory counterclaim if such claim, set off, or other right arose in connection with the Guaranteed Obligations.

(F) except as to applicable statutes of limitation, failure, omission, delay, waiver or refusal by Beneficiary to exercise, in whole or in part, any right or remedy held by Beneficiary with respect to the Agreement or any transaction under the Agreement; or

(G) any other circumstance that might otherwise constitute a defense available to, or a discharge of, any Debtor or any other individual, partnership, joint venture, corporation, association, trust or other enterprise that is a party to the Agreement, or any other agreement or instrument (including any guarantor) in respect of the Guaranteed Obligations, other than payment in full of the Guaranteed Obligations.

This Guaranty shall remain in full force and effect until the date on which the Debtor is entitled by the Agreement to a release of its Security provided thereunder. Such termination shall not release Guarantor from liability for any Guaranteed Obligations arising prior to the effective date of such termination (even if the amount of such Guaranteed Obligations is not then fully determined). If at any time any payment of any of the Guaranteed Obligations is rescinded or must be otherwise restored or returned upon the insolvency, bankruptcy, or reorganization of the Debtor, the Guarantor's obligations hereunder with respect to such payment shall be reinstated at such time as though such payment had not been made. If Debtor's assets or a major portion thereof are transferred to any other party or parties otherwise than by operation of law, and if Beneficiary enters into any transaction whereby such transferee or transferees become indebted to Beneficiary, this Guaranty, subject to all the other terms hereof, shall apply to any Guaranteed Obligations or balance of Guaranteed Obligations of such other transferee or transferees to Beneficiary.

The Guarantor irrevocably waives acceptance hereof, diligence, presentment, demand, protest, notice of dishonor, notice of any sale of collateral and any notice not provided for herein, and any requirement that at any time any person exhaust any right to take any action against the Debtor or its assets or any other guarantor or person. Guarantor further waives notice of the transactions between Beneficiary and Debtor, notice of the execution and delivery, amendment, extension, or renewal of any present or future instrument pertaining to the Guaranteed Obligations, notice of default by Debtor, and any other notice not expressly required by this Guaranty. Guarantor further consents, without further notice, to any extension or extensions of the time or times of payment of said Guaranteed Obligations, or any portion thereof, and to any change in form or amount, or renewal at any time, of such Guaranteed Obligations, or any portion

thereof, in each case up to an aggregate amount set forth below. Should any present or future Guaranteed Obligations incurred by Debtor not be paid when due or at the time to which the same may be extended, Beneficiary may proceed against Guarantor for such Obligations at any time, without notice and without any proceeding or action against Debtor.

Guarantor shall not exercise any rights which it may have or acquire by way of subrogation until all of the Guaranteed Obligations are paid in full to Beneficiary. Guarantor shall not enforce any right or receive any payment by way of subrogation until all of the Guaranteed Obligations then due shall have been paid in full and Beneficiary agrees to take at Guarantor's expense such steps as the Guarantor may reasonably request to implement such subrogation. If any amounts are paid to Guarantor in violation of the foregoing limitations, then such amounts shall be held in trust for the benefit of Beneficiary and shall forthwith be paid to Beneficiary by Guarantor to reduce the amount of outstanding Obligations, whether matured or unmatured.

In the event that acceleration of the time for payment of any amount payable by the Debtor under the Agreement is stayed upon the insolvency, bankruptcy or reorganization of the Debtor, all such amounts otherwise subject to acceleration or required to be paid upon an early termination pursuant to the terms of the Agreement shall nonetheless be payable by the Guarantor hereunder forthwith on demand by the Beneficiary.

The Guaranty shall be binding upon and inure to the benefit of the Beneficiary and its successors and assigns. Beneficiary may assign this Guaranty in its sole discretion. Guarantor may not assign its rights and obligations hereunder, whether by operation of law or otherwise, without the prior written consent of the Beneficiary which consent may be arbitrarily withheld, and any such purported assignment without such written consent will be void.

Except for increases in the aggregate amount of Guaranteed Obligations, no other provision of this Guaranty may be amended, supplemented, or modified, nor any of the terms and conditions hereof waived, except by a written instrument executed by the Guarantor and an authorized representative of the Beneficiary.

The rights, powers, remedies, and privileges provided in this Guaranty are cumulative and not exclusive of any rights, powers, remedies, and privileges provided by law and any other agreement.

Notwithstanding anything in this Guaranty to the contrary, Guarantor's liability under this Guaranty and the Beneficiary's right of recovery under the same shall be limited to an aggregate amount of _____ Dollars ($_____). In the event Beneficiary engages in litigation to enforce this Guaranty, Guarantor agrees to pay, in addition to any amounts of Debtor which Guarantor has otherwise guaranteed to pay hereunder, any and all costs and expenses incurred by Beneficiary (including reasonable attorney's fees) in enforcing this Guaranty provided Beneficiary is successful in such litigation.

Guarantor represents and warrants that:

(A) The Guarantor is duly organized, validly existing and in good standing under the laws of the jurisdiction of its incorporation and has full corporate power to execute, deliver and perform this Guaranty.

(B) The execution, delivery, and performance of the Guaranty have been and remain duly authorized by all necessary corporate action and do not contravene any provision of law or of the Guarantor's constitutional documents or any contractual restriction binding on the Guarantor or its assets.

(C) All consents, authorizations and approvals of, and registrations and declarations with, any governmental authority necessary for the due execution, delivery and performance of this Guaranty have been obtained and remain in full force and effect and all conditions thereof have been duly complied with, and no other action by and no notice to or filing with, any governmental authority is required in connection with the execution, delivery, or performance of this Guaranty.

(D) This Guaranty constitutes the legal, valid and binding obligation of the Guarantor enforceable against the Guarantor in accordance with its terms, subject, as to enforcement, to bankruptcy, insolvency, reorganization and other laws of general applicability relating to or affecting creditors' rights and to general equity principles.

All notices or communications to the other party may be sent via email and shall be followed in writing by registered or certified mail, or overnight delivery service to:

To Guarantor:

_____

Attn: _____

_____

_____

Email:

To Beneficiary:

[AEP Company]

c/o American Electric Power Service Corporation

Attn: Credit Risk Management

1 Riverside Plaza, 27th Floor

Columbus, OH 43215

Email: Columbus_Credit@aep.com

or such other address as each party shall from time to time specify.

If any provision of this Guaranty is found by a court of competent jurisdiction to be void, illegal or otherwise unenforceable in that jurisdiction, such provision, to the extent of its invalidity, shall be severed from this Guaranty and be ineffective in that jurisdiction; provided, however, that such finding shall not affect the validity, legality or enforceability of such provision in any other jurisdiction or the validity, legality or enforceability of any other provision of this Guaranty. THIS GUARANTY WILL BE GOVERNED BY AND CONSTRUED IN ACCORDANCE WITH THE LAWS OF THE STATE OF OHIO, WITHOUT REFERENCE TO CHOICE OF LAW DOCTRINE. Guarantor waives any right to trial by jury with respect to this Guaranty.

IN WITNESS WHEREOF, the Guarantor has caused this Guaranty to be duly executed as of the date set forth below.

(_____)

By: _____

Name:

Title:

Date:

EXHIBIT C

Load Ramp Schedule

October 2028	100 MW
November 2028	200 MW
December 2028	250 MW
February 2029	350 MW
March 2029	450 MW
April 2029	500 MW
July 2029	650 MW
August 2029	800 MW
September 2029	950 MW
October 2029	1,000 MW

EXHIBIT AJE-3

Muskie Data Campus Power Fact Sheet

Muskie Data Campus Power Fact Sheet

November 2026

TeraWulf plans to develop the Muskie Data Campus at EastPark Industrial Park, in Boyd and Greenup Counties, for artificial intelligence and high-performance computing. As part of that development process, TeraWulf recently signed an amended electric service agreement with Kentucky Power providing for 1,000 MW of load at the campus by 2029. The agreement ensures that TeraWulf will pay for all of its electricity costs and also includes $100 million in winter bill credits for residential customers funded by TeraWulf. Financial commitments designed to protect existing customers are also included in the agreement.

The amended agreement

TeraWulf and Kentucky Power signed the original electric service agreement in May 2026 for up to 500 MW under the utility's standard industrial tariff. The amended agreement, signed November 4, 2026, adds a second 500 MW phase and moves the target in-service date at the campus earlier, from 2030 to 2029. The amended agreement requires Kentucky Public Service Commission (KPSC) approval. Until then, the original agreement remains in effect.

When would power become available. Service is scheduled to begin with 100 MW in October 2028 and grow to the full 1,000 MW by October 2029, depending on regulatory approvals and construction.

Winter bill credits. TeraWulf would fund $10 million a year for ten years in credits for Kentucky Power's residential customers. These payments would be in addition to the campus's own electricity bills. Credits would appear on January through March bills beginning in 2029, subject to KPSC approval. For a typical residential customer, the bill credits could amount to approximately $25 per month during the winter heating season.

No discount on standard electricity charges. The amended agreement does not discount Kentucky Power's standard charges for power capacity or electricity use. It includes additional commitments from TeraWulf in addition to those charges.

Payments for energy before the new plant opens. Until Kentucky Power's planned new gas plant at Big Sandy begins operating, the campus would pay the actual market cost of the electricity it uses in place of the utility's standard fuel charge. Those market electricity costs would not be included in other customers' fuel charges. During this period, the campus would also pay a $17,000 monthly administrative fee.

Payments during construction of the new plant. If the KPSC approves both the special contract and the planned Big Sandy plant, TeraWulf would pay the financing costs on the plant's construction, known as carrying charges until the plant begins service. Those costs would otherwise be added to the plant's cost and recovered through all customers' rates.

How the agreement protects existing customers

The agreement combines long-term payment commitments, financial guarantees, and restrictions on leaving or reducing service. These provisions are designed to protect existing customers if the campus uses less electricity than expected or ends service.

Long-term commitments. Phase 1 retains its 20-year term; Phase 2 has a 15-year term, each from its own in-service date. The campus cannot reduce contracted capacity or exit during the first ten years.

Minimum monthly payments. TeraWulf must pay monthly charges based on at least 90% of the power capacity it has committed to purchase, even if it uses less. This provides a minimum payment commitment to Kentucky Power rather than making all revenue depend on actual electricity use.

Limits on leaving or reducing service. The agreement includes lengthy notice commitments and exit fees for reducing or ending service at the campus.

Financial guarantees. The amended agreements require TeraWulf to provide approximately $756 million in financial security to Kentucky Power. This financial guarantee is separate from TeraWulf's electricity payments, residential bill-credit payments, and payments during construction of the Big Sandy plant.

Who reviews and approves the agreement

The KPSC must approve the special contract and separately authorize the planned Big Sandy plant. The Kentucky Attorney General's Office of Rate Intervention may participate in these proceedings on behalf of residential consumers.

TeraWulf will submit an energy plan for the campus under Governor Beshear's Executive Order 2026-494 on Data Center Development, as it did for its Justified Data Campus in Hawesville.

How electricity would reach Muskie

The campus would receive electricity from the regional power grid, which connects power plants, transmission lines and customers across a broad area. It would not receive electricity exclusively from one power plant.

Serving the campus requires a new utility substation and new transmission lines. A substation connects power lines and changes electricity to the voltage needed for delivery. The planned infrastructure would connect the campus to AEP's existing Baker-Hanging Rock 765-kV line through a new utility substation and two new 345-kV lines, each about 3.5 miles long.

Kentucky Power's equipment. Kentucky Power would build, own and operate the utility's new substation and transmission lines. It could also use this equipment to serve other customers. TeraWulf would provide the necessary land and rights to place lines on its property at no cost to Kentucky Power.

Kentucky Power recovers the cost of these additions through its regulated tariff system, subject to KPSC review and approval. TeraWulf's approximately $320 million in grid-construction security backs its obligation to reimburse Kentucky Power if the project is canceled.

TeraWulf's equipment. TeraWulf would separately build and pay for its own on-site substation. Kentucky Power would not perform work on equipment owned by TeraWulf.

Construction of the new utility substation and transmission lines has not begun and requires KPSC approval.

How grid reliability is evaluated

Kentucky Power has studied the local transmission system to determine

what equipment and upgrades are needed to serve the campus safely.

PJM, the organization that manages the regional electric grid, will independently study how the new connection would affect the wider system. Any problems identified through that review must be addressed before the campus receives power.

These studies are intended to ensure that the campus can receive service without compromising reliability for surrounding homes and businesses.

Common questions

How would the agreement affect my electricity bill?

The agreement is designed to help, not burden, existing customers. Subject to KPSC approval, Kentucky Power's residential customers would receive $100 million in winter bill credits funded by TeraWulf over ten years. Kentucky Power will determine how the credits are distributed, subject to KPSC approval.

The campus would pay standard electricity charges without a discount, along with the additional payments described above. Kentucky Power will present its analysis of the agreement's effects on customer bills to the KPSC, which will determine how costs are recovered.

Could the campus provide benefits beyond the bill credits?

A large customer paying standard rates can help spread the utility's costs across a larger revenue base. These costs include power plants, lines, substations and maintenance.

Once the full 1,000 MW power commitment is in effect, the campus's minimum payment obligation is estimated at approximately $250 million annually at today's rates, even if it uses no electricity.

The effect on other customers' rates will depend on utility costs, electricity use and regulatory decisions. The agreement does not guarantee a specific reduction in rates beyond the proposed bill credits.

How much funding could the campus generate for local schools?

Local schools are expected to benefit through property taxes on the campus and through Kentucky's school utility tax, which school districts may levy at up to 3% of electric bills. For example, Boyd County Schools levies the full 3% utility tax.

TeraWulf will not seek an exemption from this tax.

Will the campus pay state sales tax on its electricity?

Yes. Kentucky's 6% sales tax applies to the campus's electric bills. At full operation, we estimate the campus's electricity use will generate about $40 million a year in state sales tax, or about $1 billion over its first 20 years. TeraWulf will not seek an exemption from this tax.

What happens if the campus uses less electricity or shuts down?

We don't expect the campus to shut down. Using less electricity does not eliminate TeraWulf's minimum payment obligations: it must still pay for at least 90% of its contracted capacity every month. The campus cannot exit in its first ten years; after that, the agreements require advance notice and an exit fee of up to five years of minimum payments. They also include approximately $756 million in financial guarantees that Kentucky Power can draw on if TeraWulf fails to meet its obligations.

The utility's power lines and other grid equipment would remain Kentucky Power assets that could serve other customers.

Will there be on-site nuclear reactors?

No. There are no plans for on-site small modular reactors or other on-site nuclear generation. The campus would receive electricity through Kentucky Power's transmission system.

Could Muskie expand beyond 1,000 MW?

The amended agreement covers up to 1,000 MW. TeraWulf is evaluating the site's potential for further expansion over time. Any expansion would depend on additional utility planning, infrastructure, agreements and regulatory approvals.

More information

For campus information and updates, visit muskiedatacampus.com.

For information about Kentucky Power's approach to large-load development and customer protections, visit Kentucky Power's data center information page.

Questions about Muskie? Contact info@muskiedatacampus.com.

Disclosures and Forward-Looking Statements

This fact sheet, dated November 9, 2026, replaces the October 5, 2026 version and summarizes the amended agreements. The agreements' terms and applicable regulatory decisions govern. Project schedules, financial estimates and anticipated benefits remain subject to applicable conditions and approvals.

This fact sheet contains forward-looking statements. Actual results may differ materially from those described. For information about risks and uncertainties, please see TeraWulf's filings with the Securities and Exchange Commission.

EXHIBIT AJE-4

Muskie Data Campus Economic Benefits Fact Sheet

Muskie Data Campus Economic Benefits

November 2026

TeraWulf plans to develop the Muskie Data Campus at EastPark Industrial Park, in Boyd and Greenup Counties, for artificial intelligence and high-performance computing. At its full 1,000 MW, the campus is expected to bring about $8.5 billion of investment, about 3,500 construction jobs, 350 to 500 permanent jobs across TeraWulf and its tenant, and more than $200 million a year in state and local taxes once fully operating, or about $4.8 billion over its first 20 years.

Investment and jobs

Investment. TeraWulf expects to invest about $8.5 billion in four compute buildings, built in two 500 MW phases. Kentucky Power service is scheduled to begin with 100 MW in October 2028 and grow to the full 1,000 MW by October 2029, depending on regulatory approvals and construction.

Jobs. Construction would create about 3,500 jobs across the building trades, with about $1.2 billion in construction payroll. Once operating, the campus would support 350 to 500 full-time jobs: 200 to 300 TeraWulf employees and 150 to 200 tenant employees.

State and local taxes

TeraWulf estimates the campus would pay about $354 million in state and local taxes during construction, about $89 million in its first year of operation while it ramps up, and more than $200 million a year after that, or about $4.8 billion over 20 years.

$ millions	Construction	First year	20 years
Property taxes (state and local)	–	28.6	1,208
School utility tax	–	9.5	499
Corporate income and local net-profits taxes	–	31.2	1,648
State sales tax on electricity	–	19.5	1,028
State sales tax on construction materials and equipment	305.8	–	306
Wage, occupational and insurance premium taxes	48.5	0.5	74
Total	**354.3**	**89.3**	**4,763**

Local schools. Boyd County and Greenup County schools would receive about $1.1 billion over 20 years from property taxes and the 3% school utility tax, or about $810 million after the state's SEEK funding adjustments. TeraWulf will not seek an exemption from the school utility tax or the state sales tax on electricity.

Winter bill credits

TeraWulf would fund $100 million in winter bill credits for Kentucky Power's residential customers, $10 million a year for ten years on January through March bills from 2029, subject to PSC approval.

Estimates and forward-looking statements

Tax estimates are TeraWulf projections at 2026 tax rates, covering construction and 20 years of operation. The first year reflects the ramp: 500 MW average load, one of four buildings on the January 2029 property assessment, and income and payroll taxes at half. Taxes on electricity assume a 90% load factor and $80 per MWh in the first year, rising 3% a year. A full economic impact study is underway. This fact sheet contains forward-looking statements. Actual results may differ materially from those described. For information about risks and uncertainties, please see TeraWulf's filings with the Securities and Exchange Commission.

EXHIBIT AJE-5

TeraWulf Letter Requesting Separate Applications

TERAWULF

DB LONG HUNTS DATA LLC

VIA OVERNIGHT MAIL

October 26, 2026

Amy J. Elliott
Vice President, Regulatory and External Affairs
Kentucky Power Company
1645 Winchester Avenue
Ashland, KY 41101

Re: DB Long Hunts LLC Special Contract

Dear Amy:

First, let me thank you, Cindy, Amanda, and everyone at AEP who worked to make this project a reality. Building a multi-billion-dollar data center is complex. Many moving parts must come together, from land acquisition, transmission access, generation supply, financing, construction, tenant negotiations, and community engagement. We are on schedule with our 482 MW data center in Western Kentucky in the Big Rivers service territory, and we are excited to continue work on this 500 MW Phase One and 500 MW Phase Two project in Boyd and Greenup Counties. The State and local support for this important economic development project has been outstanding.

Phase One for the first 500 MW is proceeding through a May 22, 2026 Service Agreement pursuant to Kentucky Power's Commission-approved Tariff I.G.S., including Tariff I.G.S. demand charges, energy charges, all riders, 20-year contract term, 90% minimum billing demand, collateral, and exit fee. The May 22, 2026 Service Agreement will be superseded if the Commission approves the October 1, 2026 Phase Two Special Contract. Under the Phase Two Special Contract for an additional 500 MW for 15-years, we are subject to all Tariff I.G.S. rates, terms, and conditions plus we are required to fund one hundred million dollars in Residential Bill Credits, pay for up to $465 million in financing costs for the new Big Sandy Combined Cycle Project Kentucky Power is seeking CPCN approval of, and pay PJM market energy costs, and incur all PJM energy market risks, for all of our usage (in lieu of the FAC) until the in-service date of the Big Sandy Combined Cycle Project (assuming it is approved by the Commission). The payment of PJM energy charges is intended to protect other customers from market risk. We understand that if the CPCN is denied, or if our Special Contract is not approved, then we will only receive power for Phase One. We are currently moving forward with Phase One development.

I am writing to request that Kentucky Power submit the Special Contract for approval at the Kentucky Public Service Commission separately from the Company's expected CPCN filing. Counsel has advised me that, if filed separately, the Special Contract case may proceed on a faster timeline than the CPCN case. A CPCN can take up to eight months. I am also advised that the Special Contract is subject to a different legal standard than the CPCN. A faster resolution would be beneficial to advance both tenant contracting and project financing. From a tenant perspective, a hyperscaler considering a long-term commitment to the project will want some level of certainty whether it is negotiating for 500 MW or 1,000 MW. The same is true from a financing perspective. If we are able to obtain power for both Phase One and Phase Two, then the economics of the entire project will improve (due to economies of scale and other efficiencies), thus allowing us to finance on more favorable terms. Approval of the Special Contract, even if service for Phase Two is effectively dependent on the outcome of the CPCN case, will provide additional certainty in our financing negotiations.

Thank you.

Respectfully submitted,

Nazar Khan, Co-Founder & Chief Technology Officer

Cc: Patrick Kelleher, American Electric Power
Ken Gish, American Electric Power
Amanda Clark, American Electric Power
Stefanie Fleischmann, TeraWulf Inc.
James Kacergis, TeraWulf Inc.
Mike Kurtz, Boehm Kurtz & Lowry

VERIFICATION

The undersigned, Amy J. Elliott, being duly sworn, deposes and says she is the Vice President of Regulatory and External Affairs for Kentucky Power, that she has personal knowledge of the matters set forth in the foregoing testimony and the information contained therein is true and correct to the best of her information, knowledge, and belief after reasonable inquiry.

Amy J. Elliott

Amy J. Elliott

Commonwealth of Kentucky)
) Case No. 2026-00323
County of Boyd)

Subscribed and sworn to before me, a Notary Public in and before said County and State, by Amy J. Elliott, on November 10, 2026.

Marilyn Michelle Caldwell

Notary Public

MARILYN MICHELLE CALDWELL
Notary Public
Commonwealth of Kentucky
Commission Number KYNP71841
My Commission Expires May 5, 2027

My Commission Expires May 5, 2027

Notary ID Number KYNP71841