COMMONWEALTH OF KENTUCKY
BEFORE THE PUBLIC SERVICE COMMISSION

In the Matter of:

THE APPLICATION OF APC TOWERS IV, LLC, AND CELLCO PARTNERSHIP D/B/A VERIZON WIRELESS FOR ISSUANCE OF A CERTIFICATE OF PUBLIC CONVENIENCE AND NECESSITY TO CONSTRUCT A WIRELESS COMMUNICATIONS FACILITY IN THE COMMONWEALTH OF KENTUCKY IN THE COUNTY OF PULASKI	)	CASE NO. 2025-00388

SITE NAME: NANCY

* * * * * * *

APPLICATION FOR
CERTIFICATE OF PUBLIC CONVENIENCE AND NECESSITY
FOR CONSTRUCTION OF A WIRELESS COMMUNICATIONS FACILITY

APC Towers IV, LLC and Cellco Partnership, d/b/a Verizon Wireless and ("Co-Applicants"), by counsel, pursuant to (i) KRS §§278.020, 278.040, 278.650, 278.665, and other statutory authority, and the rules and regulations applicable thereto, and (ii) the Telecommunications Act of 1996, respectfully submit this Application requesting issuance of a Certificate of Public Convenience and Necessity ("CPCN") from the Kentucky Public Service Commission ("PSC") to construct, maintain, and operate a Wireless Communications Facility ("WCF") to serve the customers of the Co-Applicant with wireless communications services.

In support of this Application, Co-Applicants respectfully provide and state the following information:

1. The complete name and address of the Co-Applicants:

   a. APC Towers IV, LLC, having a local address of 8601 Six Forks Rd; Raleigh, NC 27615

b. Cellco Partnership, d/b/a Verizon Wireless, having a local address of 2902 Ring Road, Elizabethtown, KY, 42701.

2. Co-Applicants:

a. APC Towers IV, LLC is a Delaware limited liability company and copies of the formulation document and the Statement of Good Standing from Delaware, and the Certificate of Authorization is on file with the Secretary of State of Commonwealth of Kentucky, are included as part of **Exhibit A**.

b. Cellco Partnership, d/b/a Verizon Wireless is a Delaware general partnership and a copy of the Statement of Good Standing from Delaware, and the Certificate of Assumed Name is on file with the Secretary of State of Commonwealth of Kentucky and included as part of **Exhibit A**.

3. Co-Applicants propose construction of an antenna tower for communications services, which is to be located in an area outside the jurisdiction of a planning commission, and Co-Applicants submit this application to the PSC for a certificate of public convenience and necessity pursuant to KRS §§ 278.020(1), 278.040, 278.650, 278.665, and other statutory authority.

4. The Co-Applicant operates on frequencies licensed by the Federal Communications Commission ("FCC") pursuant to applicable FCC requirements. A copy of the Co-Applicants' application for FCC Registration and Licenses to provide wireless services are attached to this Application, described as part of **Exhibit B**, and the facility will be constructed and operated in accordance with applicable FCC regulations. The certified Antenna Structure Registration will be provided as soon as received.

5. The public convenience and necessity require the construction of the proposed WCF. The construction of the WCF will bring or improve the Co-Applicant's services to an area currently not served or not adequately served by the Co-Applicants by increasing coverage or capacity and thereby enhancing the public's access to innovative and competitive wireless communications services. A statement from Co-Applicants' RF Design Engineers outlining said need is attached as **Exhibit Q** along with Propagation Maps attached as **Exhibit R**. The WCF is an integral link in the Applicant's network design that must be in place to provide adequate coverage to the service area.

6. To address the above-described service needs, Co-Applicants propose to construct a WCF located at 376 Lanetown Road; Nancy KY 42544 (North Latitude: 37° 04' 24.78", West Longitude: 84° 44' 30.23"), on a parcel of land located entirely within the county referenced in the caption of this application. The property on which the WCF will be located is owned by David B. Comer & Judy A. Comer to a Deed recorded in Deed Book 309 Page 280 recorded on January 9, 1971, in the office of the Pulaski County Clerk. The proposed WCF will consist of a 195-foot-tall self-supporting tower, with an approximately 4-foot-tall lightning arrestor attached at the top, for a total height of 199-feet. The WCF will also include concrete foundations and a shelter or cabinets to accommodate the placement of the Co-Applicants' radio electronics equipment and appurtenant equipment. The Co-Applicants' equipment cabinet or shelter will be approved for use in the Commonwealth of Kentucky by the relevant building inspector. The WCF compound will be fenced and all access gate(s) will be secured. A description of the manner in which the proposed WCF will be constructed is attached as **Exhibit C** and **Exhibit D**.

7. A list of utilities, corporations, or persons with whom the proposed WCF is likely to compete along with a map showing the proposed location as well as the identified like facilities is attached as **Exhibit E**.

8. The site development plan and a vertical profile sketch of the WCF signed and sealed by a professional engineer registered in Kentucky depicting the tower height, as well as a proposed configuration for the antennas of the Co-Applicant has also been included as part of **Exhibit C**.

9. Foundation design plans signed and sealed by a professional engineer registered in Kentucky and a description of the standards according to which the tower was designed are included as part of **Exhibit D**.

10. Co-Applicants have considered the likely effects of the installation of the proposed WCF on nearby land uses and values and has concluded that there is no more suitable location reasonably available from which adequate services can be provided, and that there are no reasonably available opportunities to co-locate Co-Applicant's antennas on an existing structure. When suitable towers or structures exist, Co-Applicant attempts to co-locate on existing structures such as communications towers or other structures capable of supporting Co-Applicant's facilities; however, no other suitable or available co-location site was found to be located in the vicinity of the site. A statement from Co-Applicant, Cellco Partnership, d/b/a Verizon Wireless's RF Design Engineer outlining exploration of co-location opportunities is attached as **Exhibit Q**.

11. A copy of the Application for Federal Aviation Administration's ("FAA") is attached as **Exhibit F**. A copy of the Determination of No Hazard will be provided as soon as it is received.

12. A copy of the Kentucky Airport Zoning Commission ("KAZC") documentation of Application is attached as **Exhibit G**. The KAZC Approval will be provided as soon as received.

13. A geotechnical engineering report was performed at the WCF site by Engineered Tower Solutions, PLLC, 3227 Wellington Court, Raleigh, NC 27615, dated December 2, 2025 and is attached as **Exhibit H**. The name and address of the geotechnical engineering firm and the professional engineer registered in Kentucky who prepared the report are included as part of **Exhibit H** and **Exhibit S**.

14. Clear directions to the proposed WCF site from the County seat are attached as **Exhibit I**. The name and telephone number of the preparer of **Exhibit I** are included as part of this exhibit.

15. Applicant, pursuant to a written agreement, has acquired the right to use the WCF site and associated property rights. A copy of the agreement is attached as **Exhibit J**.

16. Personnel directly responsible for the design and construction of the proposed WCF are well qualified and experienced. The tower and foundation drawings for the proposed tower submitted as part of **Exhibit D** bear the signature and stamp of a professional engineer registered in the Commonwealth of Kentucky. All tower designs meet or exceed the minimum requirements of applicable laws and regulations. The identity and qualifications of each person directly responsible for design and construction of the proposed tower are contained in **Exhibit S**.

17. The Construction Manager for the proposed facility is Jay Parker and the identity and qualifications of each person directly responsible for design and construction of the proposed tower are contained in **Exhibit S**.

18. As noted on the Survey attached as part of **Exhibit C**, the surveyor has determined that the tower site and access easement are not within any flood hazard area per Flood Hazard Boundary Map, Community Panel Number 21199C 0280 C, Dated July 22, 2010.

19. **Exhibit C** includes a map drawn to an appropriate scale that shows the location of the proposed tower and identifies every owner of real estate within 500 feet of the proposed tower, every owner of real estate within 200 feet of the access road including intersection with the public street system and all abutting property owners (according to the records maintained by the County Property Valuation Administrator). Attached as **Exhibit K** is the Notification List with screen shots of the PVA records verified and updated using the Pulaski County PVA on November 25, 2025. **Exhibit C** also identifies every structure and every easement within 500 feet of the proposed tower or within 200 feet of the access road including intersection with the public street system.

20. Co-Applicants have sent certified notices to every person who, according to the records of the County Property Valuation Administrator, owns property which is within 500 feet of the proposed tower or contiguous to the site property, by certified mail, return receipt requested, of the proposed construction. Each notified property owner has been provided with a map of the location of the proposed construction, the PSC docket number for this application, the address of the PSC, and informed of his or her right to request intervention. A list of the notified property owners, verified on November 25, 2025, using the Pulaski County Kentucky Property Valuation Administration records and a copy of the form of the notice sent by certified mail to each landowner on December 9, 2025, are attached as **Exhibit K** and **Exhibit L**, respectively. Thirteen (13) notices were sent to surrounding property owners; to date twelve (12) notice green cards have been returned. Copies of the mailed envelopes and returned green cards are included in **Exhibit L**. One notice to Timothy Hadon & Jonathan Fox C/O Cindy Fox was returned on February 4, 2026.

21. Co-Applicants have notified the applicable County Judge/Executive by certified mail, return receipt requested, of the proposed construction. This notice included the PSC docket number under which the application will be processed and informed the County Judge/Executive of his/her right to request intervention. A copy of this notice along with a copy of the mailed envelope and returned green card is attached as **Exhibit M**.

22. Notice signs meeting the requirements prescribed by 807 KAR 5:063, Section 1(2) that measure at least 2 feet in height and 4 feet in width and that contain all required language in letters of required height, have been posted, one in a visible location on the proposed site and one on the nearest public road. Such signs shall remain posted for at least two weeks after filing of the Application, and a copy of the posted text is attached as **Exhibit N**.

23. A legal notice advertisement regarding the location of the proposed facility has been published in a newspaper of general circulation in the county in which the WCF is proposed to be located. A copy of the newspaper legal notice advertisement is attached as **Exhibit O**.

24. The area of the proposed facility is in the unincorporated area of Pulaski County, Kentucky. The site is located at 376 Lanetown Road; Nancy KY 42544. The site is buffered by heavily wooded areas to the Southwest. The area is characterized by roadside residential development and large agricultural tracts. The subject parcel is generally flat to rolling containing a single-family home and accessory structures. There is no zoning or Plan Commission in this area of Pulaski County. The proposed facility is removed from any residential structures. The nearest residential structure is approximately 504 feet from the proposed tower site.

25. The process that was used by the Co-Applicant's radio frequency engineers in selecting the site for the proposed WCF was consistent with the general process used for selecting all other existing and proposed WCF facilities within the proposed network design area. Co-

Applicant's radio frequency engineers have conducted studies and tests in order to develop a highly efficient network that is designed to handle voice and data traffic in the service area. The engineers determined an optimum area for the placement of the proposed facility in terms of elevation and location to provide the best quality service to customers in the service area. A radio frequency design search area prepared in reference to these radio frequency studies was considered by the Co-Applicant when searching for sites for its antennas that would provide the coverage deemed necessary by the Co-Applicant. A map of the area in which the tower is proposed to be located which is drawn to scale and clearly depicts the necessary search area within which the site should be located pursuant to radio frequency requirements is attached as **Exhibit P**.

26. The tower must be located at the proposed location and proposed height to provide necessary service to wireless communications users in the subject area, as set out and documented in the RF Design Engineer's Statement of Need and Propagation Maps attached as **Exhibit Q** and **Exhibit R,** respectively. The proposed tower will expand and improve voice and data service for Verizon Wireless customers.

27. Attached hereto as **Exhibit T** please find an Affidavit of Certification for all information contained in this application.

28. All Exhibits to this Application are hereby incorporated by reference as if fully set out as part of the Application.

29. All responses and requests associated with this Application may be directed to:

Russell L. Brown
Clark, Quinn, Moses, Scott & Grahn, LLP
320 North Meridian Street, Suite 1100
Indianapolis, IN 46204
Phone: (317) 637-1321
FAX: (317) 687-2344
Email: rbrown@clarkquinnlaw.com

WHEREFORE, Co-Applicants respectfully request that the PSC accept the foregoing Application for filing and, having met the requirements of KRS §§278.020(1), 278.650, and 278 .665 and all applicable rules and regulations of the PSC, grant a Certificate of Public Convenience and Necessity to construct and operate the WCF at the location set forth herein.

Respectfully submitted,

Russell L. Brown
Clark, Quinn, Moses, Scott & Grahn, LLP
320 North Meridian Street, Suite 1100
Indianapolis, IN 46204
Phone: (317) 637-1321 / FAX: (317) 687-2344
Email: rbrown@clarkquinnlaw.com
Attorney for Cellco Partnership d/b/a Verizon Wireless

LIST OF EXHIBITS

A	Applicant Entities
B	FCC Registration and License Documentation
C	Site Development Plan: 500' Vicinity Map Legal Descriptions Flood Plain Certification Site Plan Vertical Tower Profile
D	Tower and Foundation Design
E	Competing Utilities, Corporations, or Persons List And Map of Like Facilities in Vicinity
F	FAA Application and Determination of No Hazard
G	KAZC Documentation of Application
H	Geotechnical Report
I	Directions to WCF Site
J	Real Estate Agreement
K	Notification Listing with PVA Verification
L	Property Owner Notification
M	County Judge/Executive notice
N	Posted Notices
O	Newspaper Legal Notice Advertisement
P	Radio Frequency Design Search Area
Q	Copy of RF Design Engineer Statement of Need
R	Propagation Maps
S	List of Qualified Professionals
T	Affidavit of Certification

Commonwealth of Kentucky
Michael G. Adams, Secretary of State

Michael G. Adams
Secretary of State
P. O. Box 718
Frankfort, KY 40602-0718
(502) 564-3490
http://www.sos.ky.gov

Certificate of Authorization

Authentication number: 343271
Visit https://web.sos.ky.gov/ftshow/certvalidate.aspx to authenticate this certificate.

I, Michael G. Adams, Secretary of State of the Commonwealth of Kentucky, do hereby certify that according to the records in the Office of the Secretary of State,

APC TOWERS IV, LLC

, a limited liability company authorized under the laws of the state of Delaware, is authorized to transact business in the Commonwealth of Kentucky, and received the authority to transact business in Kentucky on February 22, 2023.

I further certify that all fees and penalties owed to the Secretary of State have been paid; that an application for certificate of withdrawal has not been filed; and that the most recent annual report required by KRS 14A.6-010 has been delivered to the Secretary of State.

IN WITNESS WHEREOF, I have hereunto set my hand and affixed my Official Seal at Frankfort, Kentucky, this 3rd day of September, 2025, in the 234th year of the Commonwealth.

Michael G. Adams
Secretary of State
Commonwealth of Kentucky
343271/1262373

Delaware

The First State

I, CHARUNI PATIBANDA-SANCHEZ, SECRETARY OF STATE OF THE STATE OF DELAWARE, DO HEREBY CERTIFY "CELLCO PARTNERSHIP" IS DULY FORMED UNDER THE LAWS OF THE STATE OF DELAWARE AND IS IN GOOD STANDING AND HAS A LEGAL EXISTENCE SO FAR AS THE RECORDS OF THIS OFFICE SHOW, AS OF THE FOURTEENTH DAY OF FEBRUARY, A.D. 2025.

AND I DO HEREBY FURTHER CERTIFY THAT THE ANNUAL TAXES HAVE BEEN PAID TO DATE.

Charuni Patibanda-Sanchez, Secretary of State

3341134 8300

Authentication: 202935577

SR# 20250539476

Date: 02-14-25

You may verify this certificate online at corp.delaware.gov/authver.shtml

COMMONWEALTH OF KENTUCKY

Michael G. Adams
Secretary of State

Certificate

I, Michael G. Adams, Secretary of State for the Commonwealth of Kentucky, do hereby certify that the foregoing writing has been carefully compared by me with the original thereof, now in my official custody as Secretary of State and remaining on file in my office, and found to be a true and correct copy of

CERTIFICATE OF ASSUMED NAME OF VERIZON WIRELESS ADOPTED BY GENERAL PARTNERS OF CELLCO PARTNERSHIP FILED JUNE 21, 2006.

IN WITNESS WHEREOF, I have hereunto set my hand and affixed my Official Seal at Frankfort, Kentucky, this 10th day of May, 2023.

COMMONWEALTH OF KENTUCKY
OFFICE OF SECRETARY OF STATE

Michael G. Adams

Michael G. Adams
Secretary of State
Commonwealth of Kentucky
kdcoleman/0641227 - Certificate ID: 290787

COMMONWEALTH OF KENTUCKY
TREY GRAYSON
SECRETARY OF STATE

0641227.07 Dcornish C226

Trey Grayson
Secretary of State
Received and Filed
06/21/2006 12:06:09 PM
Fee Receipt: $20.00

CERTIFICATE OF ASSUMED NAME

This certifies that the assumed name of

Verizon Wireless

[Name under which the business will be conducted]

has been adopted by See Addendum

[Real name - KRS 365.015(1)]

which is the "real name" of [YOU MUST CHECK ONE]

- [ ] a Domestic General Partnership
- [ ] a Domestic Registered Limited Liability Partnership
- [ ] a Domestic Limited Partnership
- [ ] a Domestic Business Trust
- [ ] a Domestic Corporation
- [ ] a Domestic Limited Liability Company
- [ ] a Joint Venture
- [✓] a Foreign General Partnership
- [ ] a Foreign Registered Limited Liability Partnership
- [ ] a Foreign Limited Partnership
- [ ] a Foreign Business Trust
- [ ] a Foreign Corporation
- [ ] a Foreign Limited Liability Company

organized and existing in the state or country of Delaware, and whose address is

One Verizon Way	Basking Ridge	NJ	07920
Street address, if any	City	State	Zip Code

The certificate of assumed name is executed by

NYNEX PCS Inc.

Jane A. Schapker

Signature

Jane A. Schapker-Assistant Secretary

Print or type name and title

June 15, 2006

Date

Signature

Print or type name and title

Date

SSC-225 (7/98)

(See attached sheet for instructions)

Addendum

The full name of the Partnership is Cellco Partnership; a Delaware general partnership with its headquarters located One Verizon Way, Basking Ridge NJ 07920-1097.

General Partners of Cellco Partnership	Address
Bell Atlantic Cellular Holdings, L.P.	One Verizon Way Basking Ridge, NJ 07920
NYNEX PCS Inc.	One Verizon Way Basking Ridge, NJ 07920
PCSCO Partnership	One Verizon Way Basking Ridge, NJ 07920
GTE Wireless Incorporated	One Verizon Way Basking Ridge, NJ 07920
GTE Wireless of Ohio Incorporated	One Verizon Way Basking Ridge, NJ 07920
PCS Nucleus, L.P.	2999 Oak Road, 7th Floor Walnut Creek, CA 94597
JV PartnerCo, LLC	2999 Oak Road, 7th Floor Walnut Creek, CA 94597

Delaware

The First State

I, CHARUNI PATIBANDA-SANCHEZ, SECRETARY OF STATE OF THE STATE OF DELAWARE, DO HEREBY CERTIFY "APC TOWERS IV, LLC" IS DULY FORMED UNDER THE LAWS OF THE STATE OF DELAWARE AND IS IN GOOD STANDING AND HAS A LEGAL EXISTENCE SO FAR AS THE RECORDS OF THIS OFFICE SHOW, AS OF THE FIFTH DAY OF MAY, A.D. 2025.

AND I DO HEREBY FURTHER CERTIFY THAT THE SAID "APC TOWERS IV, LLC" WAS FORMED ON THE THIRD DAY OF MARCH, A.D. 2022.

AND I DO HEREBY FURTHER CERTIFY THAT THE ANNUAL TAXES HAVE BEEN PAID TO DATE.

C. P. Sanchez

Charuni Patibanda-Sanchez, Secretary of State

6650861 8300

SR# 20251979186

Authentication: 203603171

Date: 05-05-25

You may verify this certificate online at corp.delaware.gov/authver.shtml

FCC Form 854
Main Form

Approved by OMD – 3060-0139
See instructions for public burden estimate

Application for Antenna Structure Registration

Purpose of Filing

1) Enter the application purpose: (**NE**)

AM – Amendment of a Pending Application
AU – Administrative Update
CA – Cancellation of an Antenna Structure Registration
DI – Notification of an Antenna Structure Dismantlement
MD – Modification of a Antenna Structure Registration
NE – Registration of a New Antenna Structure
NT – Required Construction/Alteration Notification
OC – Ownership Change
RE – Registration of a Replacement Antenna Structure
WD – Withdrawal of a Pending Application

2a) If the answer to 1 is AU, CA, DI, MD, NT, OC or RE, provide the FCC Antenna Structure Registration (ASR) Number.	FCC ASR Number:
2b) If the answer to 1 is AM or WD, provide the File Number of the pending application on file.	File Number:
2c) If the answer to 1 is MD or NT, provide the date the Antenna Structure was constructed or the date it was last altered (mm/dd/yyyy).	Date:
2d) If the answer to 1 is DI, provide the date the Antenna Structure was dismantled (mm/dd/yyyy).	Date:

Antenna Structure Ownership Information

3) Select one of the entity types:

( ) Individual ( ) Unincorporated Association ( ) Trust ( ) Government Entity
( ) Corporation (**X**) Limited Liability Company ( ) General Partnership ( ) Limited Partnership
( ) Consortium ( ) Limited Liability Partnership ( ) Other: _____

4) FCC Registration Number (FRN): **0023897788**		5) Assignor FCC Registration Number (FRN):	
6) First Name (if individual):	MI:	Last Name:	Suffix:
7) Legal Entity Name (if not an individual): **APC Towers IV, LLC**			
8) Attention To: **Jonathan Greene**		9) P.O. Box:	**And/Or**
10a) Street Address 1: **8601 Six Forks Road**	10b) Street Address 2: **Suite 250**		
11) City: **RALEIGH**	12) State: **NC**	13) Zip Code: **27615**	
14) Telephone Number (xxx-xxx-xxxx): **(919) 948-4788**		15) Fax Number: (xxx-xxx-xxxx):	
16) E-mail Address: **jgreene@apctowers.com**			

Contact Representative Information

17) First Name (if individual): **Eric**	MI:	Last Name: **Johnson**	Suffix:
18) Business Name: **ECA-USA**			
19) Attention To: **Eric Johnson**	20) P.O. Box		**And/Or**
21a) Street Address 1: **1375 Union Hill Industrial Court**		21b) Street Address 2: **Suite A**	
22) City: **Alpharetta**	23) State: **GA**	24) Zip Code: **30004**	
25) Telephone Number (xxx-xxx-xxxx): **(770) 667-2040**		26) Fax Number: (xxx-xxx-xxxx):	
27) E-mail Address: **eric.johnson@eca-usa.com**			

Antenna Structure Information

28a) Latitude (DD-MM-SS.S): **37- 04- 24.8**	28b) North or South: **North**	
29a) Longitude (DDD-MM-SS.S): **084- 44- 30.2**	29b) East or West: **West**	
30) Street Address or Geographic Location: **Lanetown Road**	31) City: **Nancy**	
32) County: **PULASKI**	33) State: **KENTUCKY**	34) Zip Code: **42544**

35) Elevation of site above mean sea level (meters):	**320.3** meters
36) Overall height above ground level (AGL) of the supporting structure without appurtenances:	**59.4** meters
37) Overall height above ground level (AGL) of the antenna structure including all appurtenances:	**60.7** meters
38) Overall height above mean sea level (add items 35 and 37 together):	**381.0** meters

39a) Enter the type of structure on which the antenna will be mounted: (**MTOWER**)

B – Building
BANT – Building with Antenna on Top
BMAST – Building with Mast
BPIPE – Building with Pipe
BPOLE – Building with Pole
BRIDG – Bridge
BTWR – Building with Tower
GTOWER – Guyed Structure Used For Communication Purposes
LTOWER – Lattice Tower
MAST – Mast
MTOWER – Monopole
NNGTANN – Guyed Tower Array
NNLTANN – Lattice Tower Array
NNMTANN – Monopole Array
PIPE – Any type of Pipe
POLE – Any type of Pole
RIG – Oil or Other Type of Rig
SIGN – Any type of Sign or Billboard
SILO – Any type of Silo
STACK – Smoke Stack
TANK – Any type of Tank (water, gas, etc.)
TREE – When used as a support for an antenna
UPOLE – Utility Pole/Tower used to provide service (electric, telephone, etc.)

39b) Number of Towers in Array:	39c) Position of this Tower in the Array:
40a) Array Center Latitude (DD-MM-SS.S):	40b) North or South
41a) Array Center Longitude (DDD-MM-SS.S):	41b) East or West:

Proposed Marking and/or Lighting

42) Enter the proposed marking and/or lighting: (7)
See Form 854 Item 42 Instructions for detailed tier and lighting information.

1) None
2) Paint Only
3) Other _____
4) FAA Style B
5) FAA Style D
6) FAA Style C
7) FAA Style E
8) FAA Style F
9) FAA Style A
10) FAA Style G

FAA Notification

43) FAA Study Number:	44) Date Issued:

Environmental Compliance

45) Does the applicant request a waiver of the Commission's rules for environmental notice prior to construction due to an emergency situation?	(**No**) Yes or No
46a) If the answer to 45 is No, is another federal agency taking responsibility for environmental review of the Antenna Structure?	(**No**) Yes or No
46b) If the answer to 46a is Yes, indicate why: 1) The Antenna Structure is on Federal Land and the landholding agency is taking responsibility for the environmental review of the Antenna Structure. 2) Another federal agency has agreed with the FCC in writing to take responsibility for the environmental review of the Antenna Structure.	( ) 1 or 2
46c) If the answer to 46a is Yes, provide the name of the federal agency taking responsibility for the environmental review of the Antenna Structure.	Name:
47) If the answers to 45 and 46a are No, provide the National Notice Date for the application to be posted on the FCC's website (mm/dd/yyyy).	Date: **12/04/2025**
48) Is the applicant submitting an environmental assessment?	(**No**) Yes or No
49) Does the applicant certify that grant of Authorizations at this location would not have a significant environmental effect pursuant to Section 1.1307 of the FCC's rules?	( ) Yes or No
50) If the answer to 49 is Yes, select the basis for this certification. 1) The construction is exempt from environmental notification (other than due to another agency's review) and it does not fall within one of the categories in Section 1.1307(a) or (b) of the FCC's rules? 2) The construction is exempt from environmental notification due to another agency's review, and the other agency has issued a Finding of No Significant Impact. 3) The environmental notification has been completed, and the FCC has notified the applicant that an Environmental Assessment is not required under Section 1.1307(c) or (d) of the FCC's rules, and the Construction does not fall within one of the categories in Section 1.1307(a) or (b) of the FCC's rules. 4) The FCC has issued a Finding of No Significant Impact.	( ) 1, 2, 3, 4
51) If the answer to 50 is 3 or 4, enter the date that Local Notice was provided (mm/dd/yyyy).	Date:

Certification Statements

1) The applicant certifies that all statements made in this application and in the exhibits, attachments, or documents incorporated by reference are material, are part of this application, and are true, complete, correct, and made in good faith.
2) The applicant certifies that neither the applicant nor any other party to the application is subject to a denial of Federal benefits pursuant to Section 5301 of the Anti-Drug Abuse Act of 1988, 21 U.S.C. § 862, because of a conviction for possession or distribution of a controlled substance. See Section 1.2002(b) of the rules, 47 CFR § 1.2002(b), for the definition of "party to the application" as used in this certification.

Signature (Typed or Printed Name of Party Authorized to Sign) (For OC Applications, to be completed by Assignee)

52) First Name: **Sierra**	MI:	Last Name: **Webster**	Suffix:
53) Title: **Project Manager**			
54) Signature: **Sierra Webster**			55) Date: **Nov 21, 2025**

Signature (Typed or Printed Name of Party Authorized to Sign) (For OC Applications, to be completed by Assignor)

56) First Name:	MI:	Last Name:	Suffix:
57) Title:			
58) Signature:			59) Date:

LV NANCY DT

KY-4055

376 LANETOWN ROAD
NANCY, KY 42544
PULASKI COUNTY
TENANT: LEGAL BUSINESS ENTITY d/b/a VERIZON WIRELESS
"LV NANCY DT"

8601 SIX FORKS RD
RALEIGH, NORTH CAROLINA 27615

NEW 195'-0" MONOPOLE TOWER
w/4'-0" LIGHTNING ROD
TOTAL TOWER HEIGHT 199'-0"

FROM LOUISVILLE MTSO: 2441 HOLLOWAY ROAD LOUISVILLE, KY 40299: HEAD SOUTH ON HOLLOWAY RD TOWARD PLANTSIDE DR. (367 FT) TURN LEFT AT THE 1ST CROSS STREET ONTO PLANTSIDE DR. (0.9 MI) USE THE LEFT 2 LANES TO TURN LEFT ONTO BLANKENBAKER PKWY. (0.7 MI) USE THE RIGHT LANE TO TAKE THE RAMP ONTO I-64 E. (0.3 MI) FOLLOW I-64 E TO KY-151 S IN FRANKLIN COUNTY. TAKE EXIT 48 FROM I-64 E. (30.4 MI) MERGE ONTO I-64 E. (30.2 MI) TAKE EXIT 48 TOWARD LAWRENCEBURG. (0.2 MI) MERGE ONTO KY-151 S. (6.6 MI) CONTINUE ON US-127 S. TAKE US-150 E AND US-27 S TO LANETOWN RD IN NANCY. (84.8 MI) TURN RIGHT ONTO US-127 S. (20.3 MI) USE THE LEFT 2 LANES TO TURN LEFT ONTO US-127/US-127 BYP S. CONTINUE TO FOLLOW US-127. (4.5 MI) USE ANY LANE TO TURN LEFT ONTO US-127 S. (4.8 MI) CONTINUE ONTO US-127 BYP S. (5.3 MI) CONTINUE ONTO US-150 BYP S/S DANVILLE BYPASS. (2.3 MI) CONTINUE ONTO US-150 E. (7.5 MI) TURN RIGHT ONTO US-27 S. (29.4 MI) USE THE RIGHT LANE TO TAKE THE CUMBERLAND PARKWAY RAMP TO BOWLING GREEN. (0.5 MI) CONTINUE ONTO CUMBERLAND PKWY. (1.3 MI) TAKE EXIT 86 FOR KY-914 TOWARD KY-80/SOMERSET/BURNSIDE. (0.8 MI) CONTINUE ONTO KY-914. (1.2 MI) TURN RIGHT ONTO KY-80 W/W HWY 80. (7.1 MI) TURN RIGHT ONTO LANETOWN RD. (0.4 MI) DESTINATION WILL BE ON YOUR RIGHT.

TOWER OWNER SITE

LV NANCY DT
SITE #: KY-4055

VERIZON WIRELESS SITE

LV NANCY DT
PROJECT#: 17424917
MARKET ID: LOUISVILLE
MDG#: 5000969076

SITE ADDRESS

376 LANETOWN ROAD
NANCY, KY 42544
PULASKI COUNTY
E911 ADDRESS: TBD

TOWER OWNER

APC TOWERS
8601 SIX FORKS RD
RALEIGH, NORTH CAROLINA 27615
CONTACT: JONATHAN GREENE
PHONE: 704-724-8382
E-MAIL: jgreene@apctowers.com

PROPERTY OWNER

CONER DAVID B & JUDY A
2836 E 150 SOUTH
FRANKLIN, IN 46131
CONTACT: JUDY CONER
PHONE: 317-432-6839
E-MAIL: judy.coner@gmail.com

POLICE

SOMERSET POLICE DEPARTMENT
306 E MT VERNON ST
SOMERSET, KY 42501
PHONE: 508-679-2138

FIRE

SOMERSET FIRE DEPARTMENT
121 S CENTRAL AVE
SOMERSET, KY 42501
PHONE: 606-679-1163

GENERAL INFORMATION

LATITUDE - 37° 4' 24.78" N
LONGITUDE - 84° 44' 30.23" W
1983 (NAD83)

ELEVATION - 1051' AMSL
1988 (NAVD88)

TOWER OWNER PROPERTY AREA

0.658 ACRE

VERIZON WIRELESS LEASE AREA

12'-0"x30'-0"
(360 SF)

PROJECT TOTAL DISTURBED AREA

COMPOUND: (5625 SF) = (0.129 ACRE)
ACCESS DRIVE: (7710 SF) = (0.177 ACRE)
GROSS AREA: (13335 SF) = (0.306 ACRE)

ALL CONSTRUCTION ITEMS ARE TO BE COMPLETED BY THE TOWER OWNER GENERAL CONTRACTOR UNLESS NOTED AS (VZW GC) WHICH SHALL BE COMPLETED BY THE VERIZON WIRELESS GENERAL CONTRACTOR

PROJECT SUMMARY

PROJECT DESCRIPTION:
NOTE: ALL ITEMS WITHIN THESE CONSTRUCTION DOCUMENTS ARE BY TOWER OWNER'S GENERAL CONTRACTOR AND HIS SUB-CONTRACTORS UNLESS NOTED AS (VZW GC) WHICH SHALL INCLUDE VERIZON WIRELESS GENERAL CONTRACTOR AND HIS SUB-CONTRACTORS. GENERALLY DESCRIBED BELOW:

TOWER OWNER SCOPE:

- INSTALL A NEW 195'-0" MONOPOLE TOWER w/ 4'-0" LIGHTNING ROD (TOTAL 199'-0")
- INSTALL A NEW TOWER FOUNDATION SYSTEM
- INSTALL A NEW 75'-0"X75'-0" FENCED GRAVEL COMPOUND
- INSTALL A NEW ELECTRICAL SERVICE RUN TO SITE UTILITY H-FRAME
- INSTALL A NEW GRAVEL ACCESS DRIVE
- NO WATER OR SEWAGE SERVICES RUN TO SITE
- INSTALL NEW TOWER & SITE GROUNDING SYSTEM
- INSTALL NEW VZW SUBSURFACE GROUNDING SYSTEM
- INSTALL A NEW VZW CONCRETE EQUIPMENT AND GENERATOR PADS
- INSTALL VZW ICE BRIDGE AND FOUNDATIONS
- INSTALL VZW EQUIPMENT H-FRAME AND FOUNDATIONS
- INSTALL ELECTRICAL SERVICE CONDUIT WITH PULL TAPES FROM ILC ENCLOSURE STUB-UP TO UTILITY H-FRAME
- INSTALL NEW CONDUITS WITH PULL TAPES FROM VZW ILC STUB-UP LOCATION TO THE GENERATOR STUB-UP AT VZW GENERATOR PAD
- INSTALL (2) 1-1/4" SMOOTHWALL SDR-11 HDPE FIBER OPTIC CONDUITS W/PULL TAPES AND TRACER WIRE FROM "VERIZON WIRELESS ONLY" HAND HOLE OUTSIDE COMPOUND TO VZW EQUIPMENT PAD
- INSTALL (3) NEW "VERIZON WIRELESS ONLY" 1-1/4" SMOOTHWALL SDR-11 HDPE FIBER OPTIC CONDUITS WITH PULL TAPES AND TRACER WIRE FROM NEW "VERIZON WIRELESS ONLY" 24"X36" HAND HOLE OUTSIDE COMPOUND TO NEW "VERIZON WIRELESS ONLY" 24"X36" HAND HOLE AT R.O.W.
- PERMANENT ELECTRIC POWER MUST BE AVAILABLE FOR VERIZON WIRELESS AT THE METER BASE PRIOR TO THE SITE BEING RELEASED AS TENANT READY.

VERIZON WIRELESS SCOPE (VZW GC):

- INSTALL VZW PREFABRICATED CANOPY AND FOUNDATIONS
- INSTALL VZW ANTENNA MOUNTING SUPPORT STRUCTURE ON TOWER
- INSTALL VZW ANTENNAS, LINES, COAX, GPS ANTENNA AND RADIO EQUIPMENT
- INSTALL EXISTING SUBSURFACE GROUND LEADS TO VZW EQUIPMENT & FACILITIES
- INSTALL VZW ELECTRIC SERVICE CONDUCTORS FROM UTILITY H-FRAME TO VZW ILC ENCLOSURE
- INSTALL NEW CONDUITS WITH PULL TAPES FROM RF CABINET TO OVP H-FRAME LIT FIBER LOCATION
- INSTALL NEW CONDUITS AND CIRCUITS FROM VZW ILC ENCLOSURE TO EQUIPMENT ENCLOSURES AT VZW EQUIPMENT PAD
- INSTALL VZW GENERATOR CIRCUITS FROM VZW ILC & EQUIPMENT ENCLOSURES TO VZW GENERATOR
- INSTALL NEW OUTDOOR OVPs AND CABLING ON VERIZON EQUIPMENT H-FRAME

PROJECT DESCRIPTION

ALL WORK AND MATERIALS SHALL BE PERFORMED AND INSTALLED IN ACCORDANCE WITH THE CURRENT EDITIONS OF THE FOLLOWING CODES AS ADOPTED BY THE LOCAL GOVERNING AUTHORITIES. NOTHING IN THESE PLANS IS TO BE CONSTRUCTED TO PERMIT WORK NOT CONFORMING TO THESE CODES.

BUILDING CODE	2018 KENTUCKY BUILDING CODE (IBC 2015)
STRUCTURAL CODE	TIA/EIA-222 - REVISION H
MECHANICAL CODE	2015 INTERNATIONAL MECHANICAL CODE (IMC 2015)
PLUMBING CODE	KENTUCKY STATE PLUMBING CODE (815 KAR CHAP. 20)
ELECTRICAL CODE	2017 NATIONAL ELECTRICAL CODE (NEC) - NFPA 70
FIRE/LIFE SAFETY CODE	2015 INTERNATIONAL FIRE CODE (2015 IFC)
ENERGY CODE	2012 INTERNATIONAL ENERGY CODE (COMMERCIAL)
GAS CODE	2012 NATIONAL FUEL GAS CODE (NFPA 54)

ACCESSIBILITY REQUIREMENTS:
FACILITY IS UNMANNED AND NOT FOR HUMAN HABITATION. HANDICAPPED ACCESS REQUIREMENTS ARE NOT REQUIRED IN ACCORDANCE WITH THE 2015 IBC BUILDING CODE.

APPLICABLE CODES

SURVEYOR

SHARONDALE SURVEYING INC.
7733 SECOND FIDDLE WAY
ARRINGTON, TN 37014
PHONE: 615-513-0032

ARCHITECTURAL

TELECAD WIRELESS
1961 NORTHPOINT BLVD, STE 130
HIXSON, TN 37343
CONTACT: MATT BATES
PHONE: 423-843-9500
EMAIL: matt.bates@telecadeng.com

ELECTRICAL

KENTUCKY POWER
ADDRESS: 1645 WINCHESTER AVE
ASHLAND, KY 41101
CONTACT: NAME
PHONE: 800-572-1113
EMAIL: name@powercompany.com

ELECTRICAL UTILITY COORDINATION IS NOT FINALIZED. DO NOT PROCEED WITH CONSTRUCTION.

CONSULTANT TEAM

SHEET NUMBER	DESCRIPTION
T-1	TITLE SHEET
	SURVEY PLAN
ASR-1	ASR MAP
ASR-2	ASR MAP
Z-1	OVERALL SITE PLAN w/AERIAL OVERLAY
Z-2	OVERALL SITE PLAN w/TOWER DISTANCE TO PROPERTY LINES
Z-3	OVERALL SITE PLAN W/TOWER DISTANCE TO RESIDENTIAL BUILDINGS
Z-4	GRADING AND E&S CONTROL PLAN
Z-5	DIMENSIONED SITE PLAN
Z-6	TOWER ELEVATION
Z-7	SITE DETAILS
Z-8	FENCE DETAILS AND NOTES
Z-9	TOWER OWNER SIGNAGE

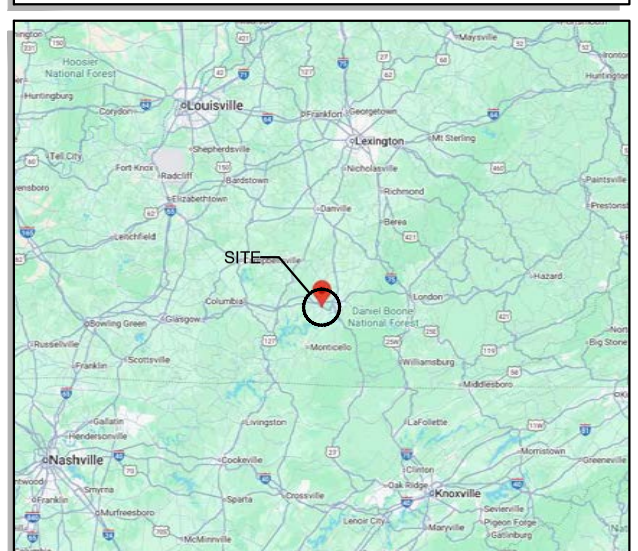

VICINITY MAP

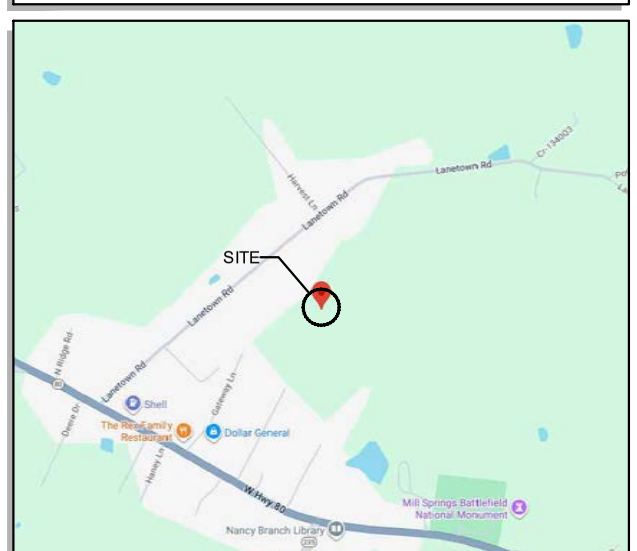

LOCATION MAP

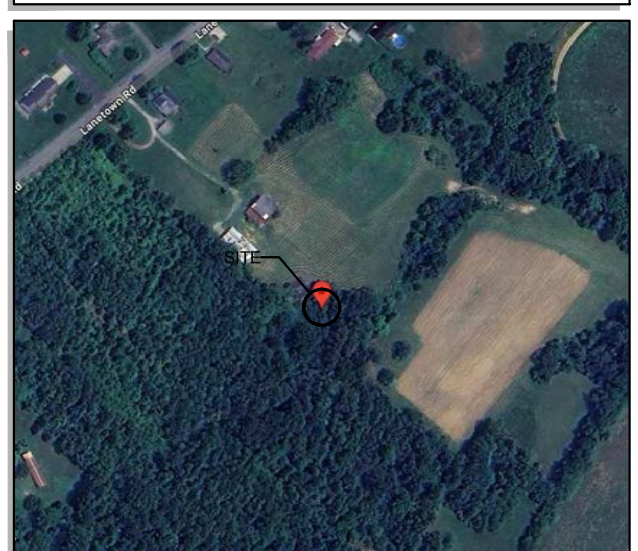

AERIAL

PREPARED FOR:

APC Towers
8601 SIX FORKS RD
RALEIGH, NORTH CAROLINA 27615

PREPARED BY:

TeleCAD Wireless
1961 NORTHPOINT BLVD, SUITE 130
HIXSON, TN 37343
PH: 423-843-9500
FAX: 423-843-9509

DRAWING NOTICE:
THE INFORMATION CONTAINED IN THIS SET OF DOCUMENTS IS PROPRIETARY BY NATURE. ANY USE OR DISCLOSURE OTHER THAN THAT WHICH RELATES TO THE CLIENT IS STRICTLY PROHIBITED.

DRAWN BY:	MDR
CHECKED BY:	DS

REVISIONS

NO.	DATE	BY	DESCRIPTION
1	01/21/26	JAE	ZONING ISSUE
0	11/06/25	JAE	ZONING ISSUE
A	10/14/25	MDR	PRELIMINARY REVIEW

ENGINEER'S STAMP:

STATE OF KENTUCKY
STEPHEN E. HUNT
25003
LICENSED PROFESSIONAL ENGINEER

NOT VALID WITHOUT P.E. STAMP & SIGNATURE

SITE NAME:
LV NANCY DT

ADDRESS:
376 LANETOWN ROAD
NANCY, KY 42544

COUNTY:
PULASKI

LATITUDE:
37° 4' 24.78" N

LONGITUDE:
84° 44' 30.23" W

SITE NUMBER:
KY-4055

SHEET TITLE:
TITLE SHEET

DRAWING NO.	REVISION:
T-1	1

FLOOD HAZARD STATEMENT:
THIS COMMUNICATIONS SITE (THE SUBJECT SITE AS SHOWN) IS NOT LOCATED WITHIN THE LIMITS OF A DESIGNATED 100 YEAR FLOOD ZONE PER FEMA\FIRM MAP COMMUNITY PANEL NUMBER 21199C 0280 C, PULASKI COUNTY, KENTUCKY. EFFECTIVE DATE JULY 22, 2010.

PROJECT BENCHMARK
PROJECT BENCHMARK ELEVATION DATUM IS BASED UPON GPS SURVEY METHODS AND PROCEDURES.
TOP OF "CAPPED" IRON PIN SET THIS SURVEY
ELEVATION = 1,070.17' N.A.V.D. 88
(SEE PLAN FOR LOCATION)

KY SPC (SOUTH ZONE)
NAD 83 GRID NORTH

30 0 30 60 90
Scale 1" = 60'
GRAPHIC SCALE
(11" X 17" SHEET SIZE)

VICINITY MAP
NTS

CENTERLINE OF PROPOSED APC TOWERS IV LLC'S TOWER CENTER
LATITUDE = 37° 04' 24.78"
LONGITUDE = 84° 44' 30.23"
ELEVATION = 1,051.00' N.A.V.D. 88

UNDERGROUND UTILITIES
CALL 2 WORKING DAYS
BEFORE YOU DIG
KENTUCKY 1-800-752-6007
UTILITIES PROTECTION SERVICE
NON-MEMBERS MUST CALL DIRECTLY

UTILITY NOTE:
THIS SURVEYOR HAS NOT PHYSICALLY LOCATED THE UNDERGROUND UTILITIES. ABOVE GRADE AND UNDERGROUND UTILITIES SHOWN WERE TAKEN FROM VISIBLE APPURTENANCES AT THE SITE, PUBLIC RECORDS AND/OR MAPS PREPARED BY OTHERS. THE SURVEYOR MAKES NO GUARANTEE THAT THE UNDERGROUND UTILITIES SHOWN COMPRISE ALL SUCH UTILITIES IN THE AREA, EITHER IN SERVICE OR ABANDONED. THE SURVEYOR FURTHER DOES NOT WARRANT THAT THE UNDER-GROUND UTILITIES ARE IN THE EXACT LOCATION INDICATED. THEREFORE, RELIANCE UPON THE TYPE, SIZE AND LOCATION OF UTILITIES SHOWN SHOULD BE DONE SO WITH THIS CIRCUMSTANCE CONSIDERED. DETAILED VERIFICATION OF EXISTENCE, LOCATION AND DEPTH SHOULD ALSO BE MADE PRIOR TO ANY DECISION RELATIVE THERETO IS MADE. AVAILABILITY AND COST OF SERVICE SHOULD BE CONFIRMED WITH THE APPROPRIATE UTILITY COMPANY.

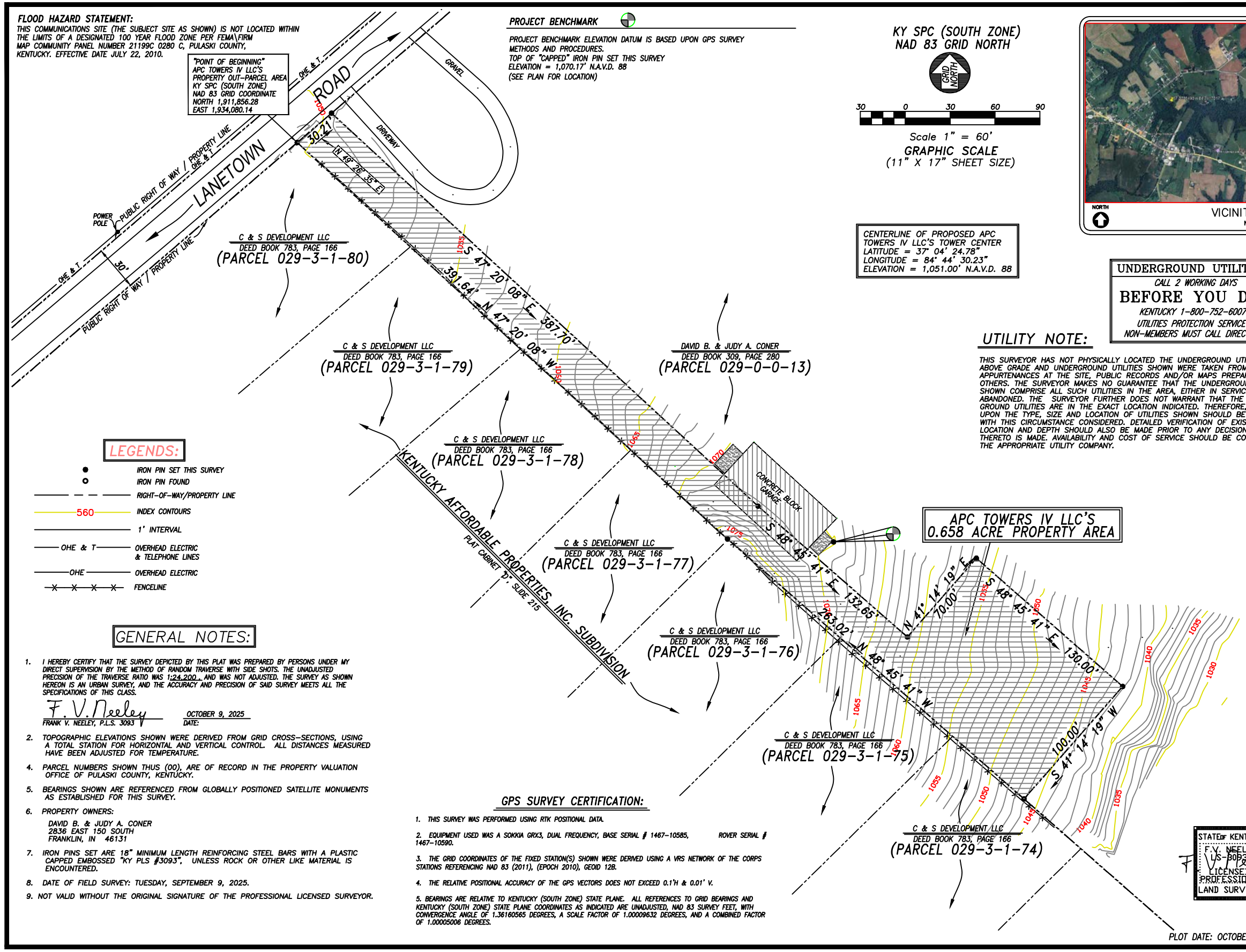

LEGENDS:

- IRON PIN SET THIS SURVEY
- IRON PIN FOUND
- RIGHT-OF-WAY/PROPERTY LINE
- 560 INDEX CONTOURS
- 1' INTERVAL
- OHE & T — OVERHEAD ELECTRIC & TELEPHONE LINES
- OHE — OVERHEAD ELECTRIC
- FENCELINE

GENERAL NOTES:

1. I HEREBY CERTIFY THAT THE SURVEY DEPICTED BY THIS PLAT WAS PREPARED BY PERSONS UNDER MY DIRECT SUPERVISION BY THE METHOD OF RANDOM TRAVERSE WITH SIDE SHOTS. THE UNADJUSTED PRECISION OF THE TRAVERSE RATIO WAS 1:24,200., AND WAS NOT ADJUSTED. THE SURVEY AS SHOWN HEREON IS AN URBAN SURVEY, AND THE ACCURACY AND PRECISION OF SAID SURVEY MEETS ALL THE SPECIFICATIONS OF THIS CLASS.

   F. V. Neeley — OCTOBER 9, 2025
   FRANK V. NEELEY, P.L.S. 3093 — DATE:

2. TOPOGRAPHIC ELEVATIONS SHOWN WERE DERIVED FROM GRID CROSS-SECTIONS, USING A TOTAL STATION FOR HORIZONTAL AND VERTICAL CONTROL. ALL DISTANCES MEASURED HAVE BEEN ADJUSTED FOR TEMPERATURE.
4. PARCEL NUMBERS SHOWN THUS (00), ARE OF RECORD IN THE PROPERTY VALUATION OFFICE OF PULASKI COUNTY, KENTUCKY.
5. BEARINGS SHOWN ARE REFERENCED FROM GLOBALLY POSITIONED SATELLITE MONUMENTS AS ESTABLISHED FOR THIS SURVEY.
6. PROPERTY OWNERS:
   DAVID B. & JUDY A. CONER
   2836 EAST 150 SOUTH
   FRANKLIN, IN 46131
7. IRON PINS SET ARE 18" MINIMUM LENGTH REINFORCING STEEL BARS WITH A PLASTIC CAPPED EMBOSSED "KY PLS #3093", UNLESS ROCK OR OTHER LIKE MATERIAL IS ENCOUNTERED.
8. DATE OF FIELD SURVEY: TUESDAY, SEPTEMBER 9, 2025.
9. NOT VALID WITHOUT THE ORIGINAL SIGNATURE OF THE PROFESSIONAL LICENSED SURVEYOR.

GPS SURVEY CERTIFICATION:

1. THIS SURVEY WAS PERFORMED USING RTK POSITIONAL DATA.
2. EQUIPMENT USED WAS A SOKKIA GRX3, DUAL FREQUENCY, BASE SERIAL # 1467-10585, ROVER SERIAL # 1467-10590.
3. THE GRID COORDINATES OF THE FIXED STATION(S) SHOWN WERE DERIVED USING A VRS NETWORK OF THE CORPS STATIONS REFERENCING NAD 83 (2011), (EPOCH 2010), GEOID 12B.
4. THE RELATIVE POSITIONAL ACCURACY OF THE GPS VECTORS DOES NOT EXCEED 0.1'H & 0.01' V.
5. BEARINGS ARE RELATIVE TO KENTUCKY (SOUTH ZONE) STATE PLANE. ALL REFERENCES TO GRID BEARINGS AND KENTUCKY (SOUTH ZONE) STATE PLANE COORDINATES AS INDICATED ARE UNADJUSTED, NAD 83 SURVEY FEET, WITH CONVERGENCE ANGLE OF 1.36160565 DEGREES, A SCALE FACTOR OF 1.00009632 DEGREES, AND A COMBINED FACTOR OF 1.00005008 DEGREES.

STATE OF KENTUCKY
F.V. NEELEY
LS-3093
LICENSED PROFESSIONAL LAND SURVEYOR
F. V. Neeley

PLOT DATE: OCTOBER 9, 2025

APC Towers

SHARONDALE SURVEYING INC.
7733 SECOND FIDDLE WAY
ARRINGTON, TN 37014
(615) 513-0032
E-Mail: Sharndal@bellsouth.net

APC TOWER IV LLC SITE SURVEY: KENTUCKY
"LV NANCY DT" TOWER SITE
LOCATED IN: NANCY, PULASKI COUNTY, KENTUCKY
BOUNDARY SURVEY OF A PROPOSED 0.658 ACRE PARCEL
PREPARED FOR: APC TOWERS IV LLC.
APC TOWERS IV LLC SITE NUMBER: KY-4055

SHEET NUMBER:
1 OF 2

PROJECT NUMBER:
225.061.20

APC TOWERS IV LLC'S PROPERTY AREA DESCRIPTION

Beginning at a capped "Sharondale Nashville" iron pin set in the southeast margin of Lanetown Road located at Kentucky State Plane (South Zone) NAD 83 Grid Coordinate North 1,911,856.28, East 1,934,080.14;

Thence, with the southeast margin of Lanetown Road, North 49 degrees 26 minutes 35 seconds East, 30.21 feet to a capped "Sharondale Nashville" iron pin ;

Thence, leaving the southeast margin of Lanetown Road, South 47 degrees 20 minutes 08 seconds East, 387.70 feet to a point;

Thence, South 48 degrees 45 minutes 41 seconds East, 132.65 feet to a capped "Sharondale Nashville" iron pin set;

Thence, North 41 degrees 14 minutes 19 seconds East, 70.00 feet to a capped "Sharondale Nashville" iron pin set;

Thence, South 48 degrees 45 minutes 41 seconds East, 130.00 feet to a capped "Sharondale Nashville" iron pin set;

Thence, South 41 degrees 14 minutes 19 seconds West, 100.00 feet to a capped "Sharondale Nashville" iron pin set;

Thence, North 48 degrees 45 minutes 41 seconds West, 263.02 feet to a capped "Sharondale Nashville" iron pin set;

Thence, North 47 degrees 20 minutes 08 seconds West, 391.64 feet to the point of beginning, containing 28,675 square feet, (0.658 acres).

Being a portion of the property conveyed to David B. Corner and wife, Judith A. Corner, of record in Deed Book 309, Page 280, of the Court Clerk's Office of Pulaski County, Kentucky.

UNDERLYING LANDOWNER'S PROPERTY AREA DESCRIPTION

A certain tract or parcel of land lying and being in the village of Nancy, on the Lane Town Road (formerly known as McFalls Road0, Pulaski County, Kentucky and bounded and described as follows:

BEGINNING at a stone in the Lane Town Road (formerly McFalls Road); thence S 52 E 1063 feet, more or less, to a stake in Robert Daulton's line; thence in a Southwesterly direction 100 feet with Daulton's line to a stake, new corner; thence parallel with the first line N 52 W 1063 feet, more or less, to the Lane Town Road; thence in a Northeasterly direction 100 feet with the Lane Town Road to the point of beginning (it being the intention of the grantors to convey a lot 100 feet in width from the Lane Town Road to the Robert Daulton line).

ALSO:

A certain tract or parcel of land lying and being in Pulaski County, State of Kentucky, and bounded and described as follows, to-wit:

Beginning on a stone at Lane Town Road, C.O. Fox's corner; thence 146 feet S.W. with said road to Ruby Tarter's corner; thence 17 poles 2 feet Southeast a conditional line between Ruby Tarter and Henderson to a stone; thence 146 feet Southwest a conditional line between Tarter and Henderson to Clark Shepperd's corner; thence 150 feet west with Shepperd's line to a stone in the Stringer line; thence 49 poles Southeast with Stringer line to a stone in Haneys line, Stringer's corner; thence 39 poles with Haney's line Northeast to a stone, Fox's corner; thence 66 poles northward with Fox's line to said road, the beginning, containing 11 acres, more or less.

There is excepted from the above boundary a lot 146 feet wide facing Lane Town Road and running back 17 poles and 2 feet on the Northwest side of properly conveyed herein, adjacent to Ruby Tarter.

Also

A certain parcel of ground located and being in Pulaski County, State of Kentucky and bounded and described as follows.

Beginning at a stone on the east side of McFall Road, Charles Stringer's corner; thence eastward with Stringer's line 281 feet to an iron stake; thence northward parallel to McFall Road 151 1/2 feet to an iron stake; thence westward parallel with Stringer line 281 feet to an iron stake on east side of McFall Road; thence southward with the east side of McFall Road 151 1/2 feet to the beginning.

Tax ID: 029-0-0-13

Being the same Property Conveyed To David B. Corner And Judy A. Corner, His Wife, Jointly, And To The Survivor in Fee Simple, Grantee, From Clark Shepperd And Virginia Shepperd, His Wife, Grantor, By Deed Recorded 01/09/1971, as Book 309, Page 280 of the Pulaski County records.

SURVEYOR'S REVIEW OF "SPECIAL EXCEPTIONS"

NOTES CORRESPONDING TO OLD REPUBLIC NATIONAL TITLE INSURANCE COMPANY'S "TITLE COMMITMENT" – COMMITMENT NO. 01-25031737-01T, ISSUED MAY 29, 2025.

EXCEPTION NUMBERS ONE THROUGH SIX ARE NOT THE TYPE OF EXCEPTION(S) TO BE SHOWN UPON THE FACE OF THIS SURVEY.

7 – MORTGAGE TO SECURE AN INDEBTEDNESS IN THE AMOUNT OF $ 20,000.00 FROM DAVID B. CONER AND JUDY A. CONER, HIS WIFE, JOINTLY, AND TO THE SURVIROR IN FEE SIMPLE, GRANTEE, FROM CLARK SHEPPARD AND VIRGINAI SHEPPERD, HIS WIFE, GRANTOR BY DEED RECORDED 01/09/1971 AS BOOK 309, PAGE 280, OF THE COURT CLERK'S OFFICE OF PULASKI COUNTY, KENTUCKY, IS NOT APPLICABLE TO APC TOWERS IV LLS'C PROPERTY PURCHASE AREA.

STATE OF KENTUCKY
F.V. NEELEY
LS-3053
LICENSED
PROFESSIONAL
LAND SURVEYOR

F.V. Neeley

PLOT DATE: OCTOBER 9, 2025

APC Towers

SHARONDALE SURVEYING INC.
7733 SECOND FIDDLE WAY
ARRINGTON, TN 37014
(615) 513-0032
E-Mail: Sharndal@bellsouth.net

APC TOWER IV LLC SITE SURVEY: KENTUCKY
"LV NANCY DT" TOWER SITE
LOCATED IN: NANCY, PULASKI COUNTY, KENTUCKY
BOUNDARY SURVEY OF A PROPOSED 0.658 ACRE PARCEL
PREPARED FOR: APC TOWERS IV LLC.
APC TOWERS IV LLC SITE NUMBER: KY-4055

SHEET NUMBER:
2 OF 2

PROJECT NUMBER:
225.061.20

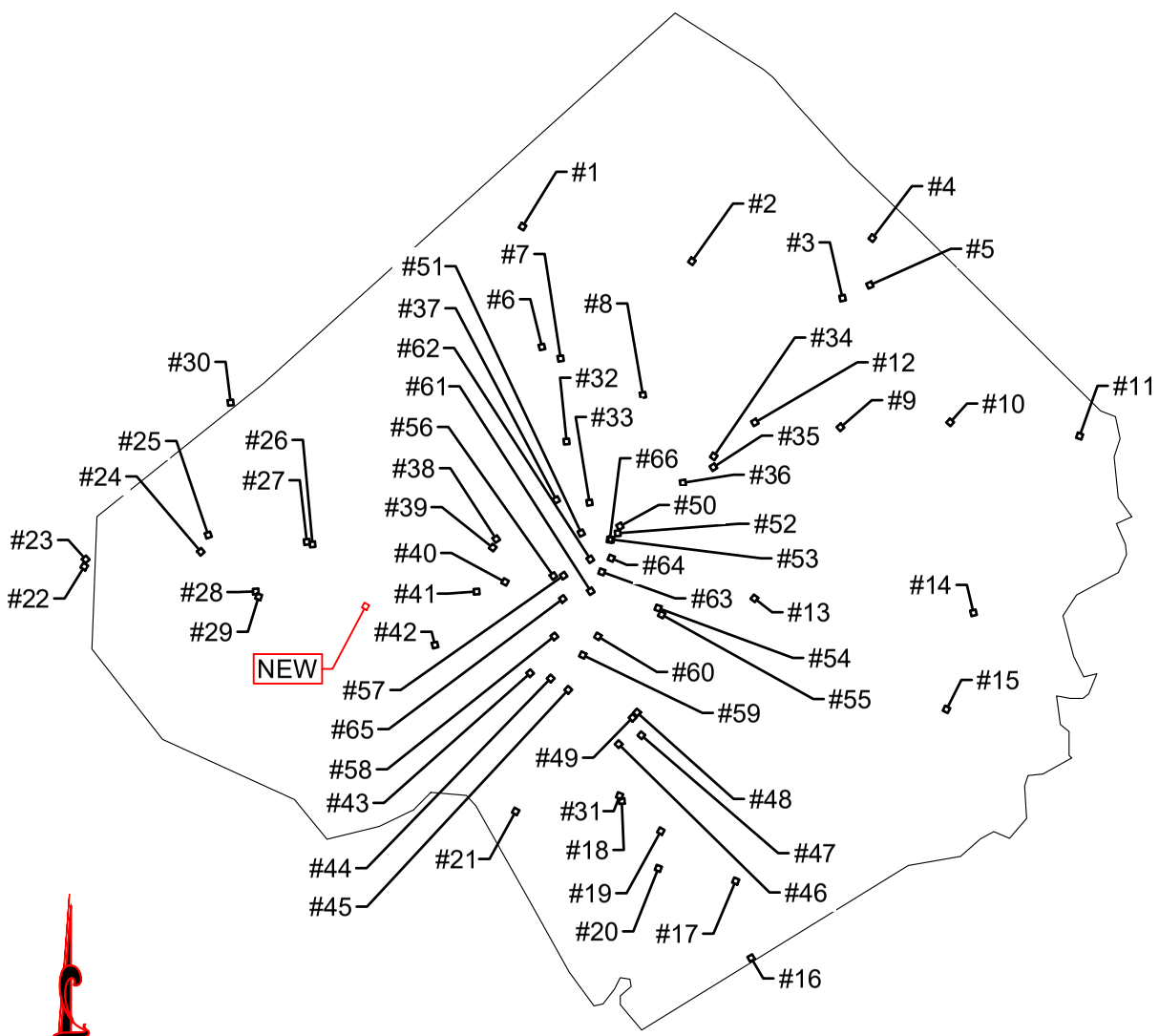

PULASKI COUNTY

FCC REGISTERED TOWERS

TOWER	TOWER OWNER	ASR	LATITUDE	LONGITUDE
NEW	APC TOWERS	TBD	37° 4' 24.78"N	84° 44' 30.23"W
1	CELLCO PARTNERSHIP	1250182	37°15'4.90"N	84°38'58.40"W
2	TOWERCO V HOLDINGS LLC	1328459	37°14'4.60"N	84°32'50.40"W
3	CELLCO PARTNERSHIP	1250183	37°13'3.80"N	84°27'29.00"W
4	AMERICAN TOWERS LLC	1018905	37°14'47.90"N	84°26'28.50"W
5	HEMPHILL CORPORATION	1232562	37°13'27.20"N	84°26'25.30"W
6	GLOBAL TOWER, LLC. THROUGH AMERICAN TOWERS, LLC	1229869	37°11'39.70"N	84°38'18.20"W
7	EAST KENTUCKY POWER COOPERATIVE, INC	1237226	37°11'19.30"N	84°37'36.30"W
8	CELLCO PARTNERSHIP	1272282	37°10'16.60"N	84°34'38.90"W
9	VERTICAL BRIDGE CC FM, LLC	1043675	37° 9'16.00"N	84°27'35.00"W
10	AMERICAN TOWERS LLC	1230266	37° 9'26.40"N	84°23'34.20"W
11	AMERICAN TOWERS LLC	1229865	37° 9'7.60"N	84°18'58.80"W
12	SBA TOWERS IX, LLC	1312272	37° 9'22.70"N	84°30'42.70"W
13	CELLCO PARTNERSHIP	1263386	37° 4'25.90"N	84°30'38.10"W
14	SOUTH KENTUCKY RURAL ELECTRIC COOPERATIVE CORPORATION	1043456	37° 4'3.50"N	84°22'37.10"W
15	KENTUCKY, COMMONWEALTH OF DBA = KY EMERGENCY WARNING SYSTEM KEWS	1044797	37° 1'13.40"N	84°23'42.60"W
16	SBA TOWERS III LLC	1260689	36°53'59.90"N	84°30'50.00"W
17	SBA TOWERS III LLC	1260939	36°56'10.20"N	84°31'25.20"W
18	SBA TOWERS III LLC	1260942	36°58'40.00"N	84°35'24.90"W
19	VERTICAL BRIDGE CC FM, LLC	1043677	36°57'38.00"N	84°34'7.00"W

PREPARED FOR:

APC Towers

8601 SIX FORKS RD
RALEIGH, NORTH CAROLINA 27615

PREPARED BY:

TeleCAD Wireless

1961 NORTHPOINT BLVD, SUITE 130
HIXSON, TN 37343
PH: 423-843-9500
FAX: 423-843-9509

DRAWN BY:	MDR
CHECKED BY:	DS

REVISIONS

NO.	DATE	BY	DESCRIPTION
1	01/21/26	JAE	ZONING ISSUE
0	11/06/25	JAE	ZONING ISSUE
A	10/14/25	MDR	PRELIMINARY REVIEW

ENGINEER'S STAMP:

STATE OF KENTUCKY
STEPHEN E. HUNT
25003
LICENSED PROFESSIONAL ENGINEER

NOT VALID WITHOUT P.E. STAMP & SIGNATURE

SITE NAME:
LV NANCY DT

ADDRESS:
376 LANETOWN ROAD
NANCY, KY 42544

COUNTY:
PULASKI

LATITUDE:
37° 4' 24.78" N

LONGITUDE:
84° 44' 30.23" W

SITE NUMBER:
KY-4055

SHEET TITLE:
OVERALL SITE PLAN

DRAWING NO.	REVISION:
ASR-1	1

FCC REGISTERED TOWERS

TOWER	TOWER OWNER	ASR	LATITUDE	LONGITUDE
20	SBA INFRASTRUCTURES, LLC	1232715	36°56'43.90"N	84°34'4.50"W
21	CELLULAR PHONE OF KENTUCKY, INC. DBA = RAMCELL	1043628	36°58'25.50"N	84°39'8.80"W
22	SBA INFRASTRUCTURES, LLC	1232264	37° 5'19.70"N	84°54'47.30"W
23	UNITI TOWERS LLC	1318405	37° 5'25.30"N	84°54'43.80"W
24	CELLCO PARTNERSHIP	1250184	37° 5'46.40"N	84°50'33.90"W
25	AMERICAN TOWERS LLC	1289960	37° 6'13.80"N	84°50'17.60"W
26	SBA INFRASTRUCTURES, LLC	1247464	37° 6'3.70"N	84°46'43.50"W
27	UNITI TOWERS LLC	1316046	37° 6'0.80"N	84°46'36.40"W
28	AMERICAN TOWERS LLC	1203424	37° 4'42.30"N	84°48'36.80"W
29	K-LOVE, INC.	1250130	37° 4'36.30"N	84°48'38.80"W
30	KENTUCKY AUTHORITY FOR EDUCATIONAL TELEVISION DBA WKSO TV	1044043	37°10'3.00"N	84°49'30.00"W
31	CELLCO PARTNERSHIP	1251434	36°58'40.40"N	84°35'27.50"W
32	CELLCO PARTNERSHIP	1253989	37° 8'48.90"N	84°37'25.10"W
33	VB-S1 ASSETS, LLC	1043674	37° 7'3.00"N	84°36'42.00"W
34	AMERICAN TOWERS LLC	1279127	37° 8'25.10"N	84°32'6.10"W
35	AMERICAN TOWERS LLC	1042206	37° 8'16.00"N	84°32'7.90"W
36	SOMERSET EDUCATIONAL BROADCASTING FOUNDATION	1051877	37° 7'52.00"N	84°33'15.00"W
37	VB BTS, LL, LLC	1321398	37° 7'5.70"N	84°37'53.70"W
38	SBA INFRASTRUCTURE, LLC	1231891	37° 5'59.90"N	84°39'58.90"W

FCC REGISTERED TOWERS

TOWER	TOWER OWNER	ASR	LATITUDE	LONGITUDE
39	UNITI TOWERS LLC	1316998	37° 5'58.30"N	84°40'2.50"W
40	F.T.G. BROADCASTING, INC.	1264631	37° 4'50.60"N	84°39'38.50"W
41	VERTICAL BRIDGE CC FM, LLC	1043118	37° 4'38.90"N	84°40'37.20"W
42	CELLCO PARTNERSHIP	1251910	37° 3'4.70"N	84°42'4.50"W
43	RURAL CELLULAR CORPORATION	1303154	37° 2'20.50"N	84°38'42.20"W
44	NEW CINGULAR WIRELESS PCS, LLC	1314542	37° 2'18.30"N	84°37'57.40"W
45	CELLCO PARTNERSHIP	1250175	37° 1'54.00"N	84°37'23.00"W
46	EAST KENTUCKY POWER COOPERATIVE, INC	1234158	37° 0'16.30"N	84°35'30.80"W
47	EAST KENTUCKY POWER COOPERATIVE, INC	1044514	37° 0'30.00"N	84°34'40.00"W
48	SBA INFRASTRUCTURES, LLC	1043977	37° 1'3.40"N	84°34'55.50"W
49	SBA INFRASTRUCTURES, LLC	1234225	37° 1'12.70"N	84°34'43.70"W
50	TOWERCO V HOLDINGS LLC	1043979	37° 6'13.30"N	84°35'39.50"W
51	EPPERSON AIR CONDITIONING & HEATING	1204492	37° 6'22.20"N	84°37'2.70"W
52	GLOBAL TOWER, LLC. THROUGH AMERICAN TOWERS, LLC	1235212	37° 6'12.00"N	84°35'46.00"W
53	CELLULAR PHONE OF KENTUCKY DBA = RAMCELL	1043625	37° 6'10.00"N	84°35'45.00"W
54	SBA TOWERS III LLC	1260416	37° 4'6.80"N	84°34'5.70"W
55	UNITI TOWERS LLC	1316984	37° 4'0.10"N	84°34'0.90"W
56	NORFOLK SOUTHERN CORPORATION	1035924	37° 4'60.00"N	84°37'52.00"W
57	CITY OF SOMERSET	1300944	37° 5'6.40"N	84°37'33.30"W

FCC REGISTERED TOWERS

TOWER	TOWER OWNER	ASR	LATITUDE	LONGITUDE
58	NEW CINGULAR WIRELESS PCS, LLC	1317834	37° 3'16.70"N	84°37'43.50"W
59	NEW CINGULAR WIRELESS PCS, LLC	1319263	37° 2'49.60"N	84°36'52.90"W
60	TILLMAN INFRASTRUCTURE, LLC	1329213	37° 3'12.50"N	84°36'22.90"W
61	NORFOLK SOUTHERN CORPORATION	1208691	37° 4'40.40"N	84°36'30.80"W
62	BLUE SKY TOWERS IV, LLC	1331489	37° 5'29.90"N	84°36'32.10"W
63	OUTREACH FOR JESUS	1291343	37° 5'12.30"N	84°36'7.70"W
64	KENTUCKY, COMMONWEALTH OF DBA = KY EMERGENCY WARNING SYSTEM KEWS	1219832	37° 5'35.30"N	84°35'47.80"W
65	SBA PROPERTIES, LLC	1230577	37° 4'26.30"N	84°37'31.20"W
66	MOBILE COMMUNICATIONS AMERICA, INC.	1047989	37° 6'10.00"N	84°35'45.00"W

PREPARED FOR:

APC Towers

8601 SIX FORKS RD
RALEIGH, NORTH CAROLINA 27615

PREPARED BY:

TeleCAD Wireless

1961 NORTHPOINT BLVD, SUITE 130
HIXSON, TN 37343
PH: 423-843-9500
FAX: 423-843-9509

DRAWN BY:	MDR
CHECKED BY:	DS

REVISIONS

NO.	DATE	BY	DESCRIPTION
1	01/21/26	JAE	ZONING ISSUE
0	11/06/25	JAE	ZONING ISSUE
A	10/14/25	MDR	PRELIMINARY REVIEW

ENGINEER'S STAMP:

STATE OF KENTUCKY
STEPHEN E. HUNT
25003
LICENSED PROFESSIONAL ENGINEER

NOT VALID WITHOUT P.E. STAMP & SIGNATURE

SITE NAME:
LV NANCY DT

ADDRESS:
376 LANETOWN ROAD
NANCY, KY 42544

COUNTY:
PULASKI

LATITUDE:
37° 4' 24.78" N

LONGITUDE:
84° 44' 30.23" W

SITE NUMBER:
KY-4055

SHEET TITLE:
OVERALL SITE PLAN

DRAWING NO.	REVISION:
ASR-2	1

Kentucky 811

Know what's below. Call before you dig.

Call Monday thru Friday – 7 am. to 6 pm.

1-800-752-6007

PER KENTUCKY STATE LAW, IT IS AGAINST THE LAW TO EXCAVATE WITHOUT NOTIFYING THE UNDERGROUND LOCATION SERVICE TWO (2) WORKING DAYS BEFORE COMMENCING WORK.

OVERALL SITE PLAN w/AERIAL OVERLAY

NORTH

0' 150' 300'

SCALE: 1" = 150'

SITE INFORMATION NOTES:

1. THIS PAGE WAS CREATED USING GOOGLE EARTH IMAGERY DATED: 06/10/25 AND HAS NOT BEEN VERIFIED WITH AN ACTUAL SURVEY. ALL DIMENSION ARE ESTIMATED AND ARE FOR REFERENCE ONLY. CONTRACTOR TO VERIFY ALL INFORMATION AND REPORT ANY DISCREPANCIES TO THE ENGINEER PRIOR TO CONSTRUCTION.
2. PROPERTY LINES AND PROPERTY OWNER INFORMATION WAS COMPILED FROM INFORMATION FROM PULASKI COUNTY PROPERTY VALUATION ADMINISTRATOR (PVA) DATED: 10/13/25.

APWA UTILITY COLOR CODES

- PROPOSED CONSTRUCTION
- TEMPORARY SURVEY MARKINGS
- ELECTRIC POWER LINES, CABLES, CONDUIT, AND LIGHTING CABLES
- GAS, OIL STEAM PETROLEUM OR GASEOUS MATERIALS
- COMMUNICATION, ALARM OR SIGNAL LINES, CABLES OR CONDUIT
- POTABLE WATER
- RECLAIMED WATER, IRRIGATION AND SLURRY LINES
- SEWERS AND DRAIN LINES

PREPARED FOR:

APC Towers

8601 SIX FORKS RD
RALEIGH, NORTH CAROLINA 27615

PREPARED BY:

TeleCAD Wireless

1961 NORTHPOINT BLVD, SUITE 130
HIXSON, TN 37343
PH: 423-843-9500
FAX: 423-843-9509

DRAWING NOTICE:

THE INFORMATION CONTAINED IN THIS SET OF DOCUMENTS IS PROPRIETARY BY NATURE. ANY USE OR DISCLOSURE OTHER THAN THAT WHICH RELATES TO THE CLIENT IS STRICTLY PROHIBITED.

DRAWN BY:	MDR
CHECKED BY:	DS

REVISIONS

NO.	DATE	BY	DESCRIPTION
1	01/21/26	JAE	ZONING ISSUE
0	11/06/25	JAE	ZONING ISSUE
A	10/14/25	MDR	PRELIMINARY REVIEW

ENGINEER'S STAMP:

STATE OF KENTUCKY
STEPHEN E. HUNT
25003
LICENSED PROFESSIONAL ENGINEER

NOT VALID WITHOUT P.E. STAMP & SIGNATURE

SITE NAME: LV NANCY DT

ADDRESS: 376 LANETOWN ROAD NANCY, KY 42544

COUNTY: PULASKI

LATITUDE: 37° 4' 24.78" N

LONGITUDE: 84° 44' 30.23" W

SITE NUMBER: KY-4055

SHEET TITLE: OVERALL SITE PLAN

DRAWING NO.	REVISION:
Z-1	1

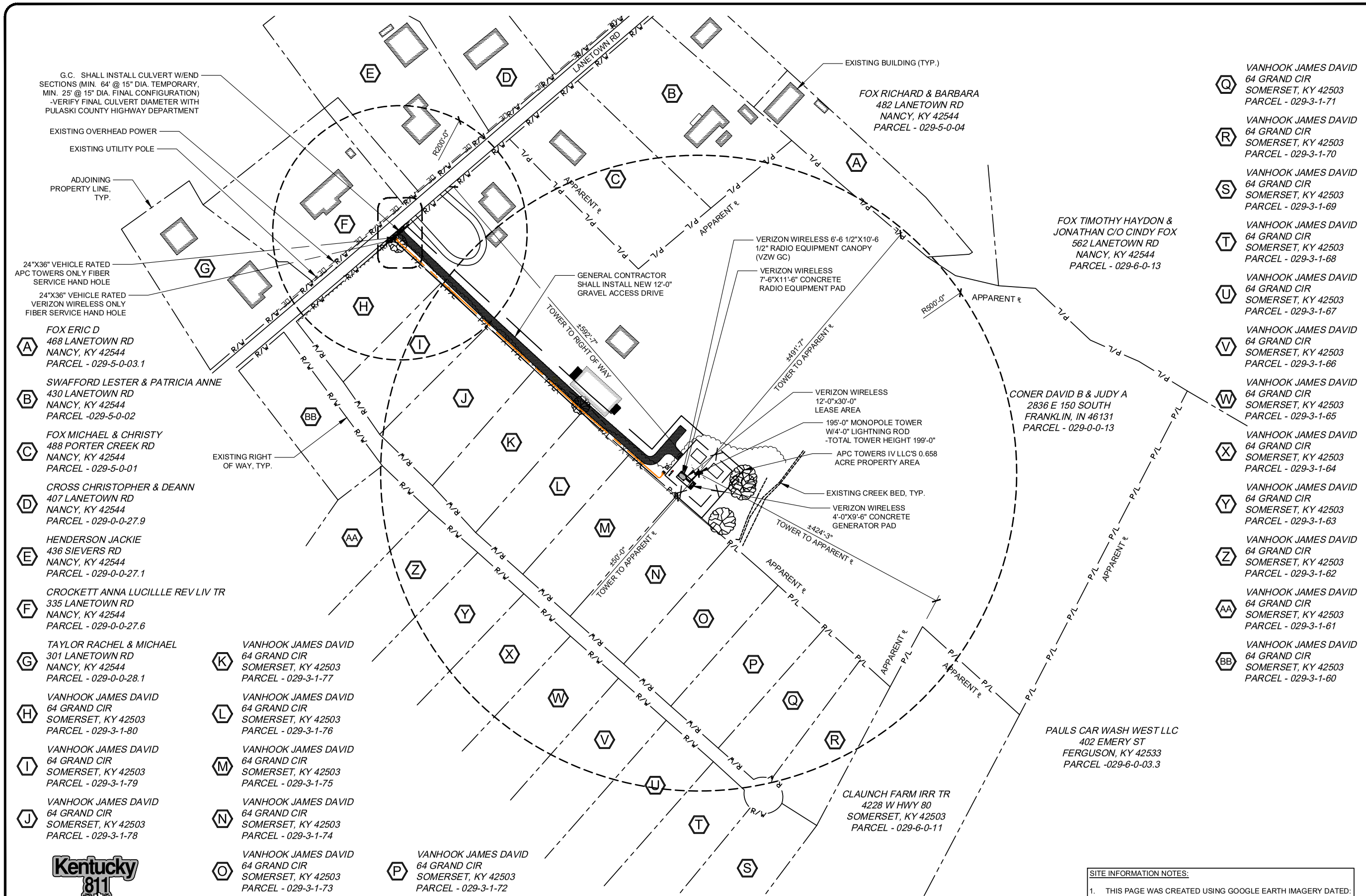

Kentucky 811
Know what's below. Call before you dig.
Call Monday thru Friday – 7 am. to 6 pm.
1-800-752-6007
PER KENTUCKY STATE LAW, IT IS AGAINST THE LAW TO EXCAVATE WITHOUT NOTIFYING THE UNDERGROUND LOCATION SERVICE TWO (2) WORKING DAYS BEFORE COMMENCING WORK.

OVERALL SITE PLAN w/TOWER DISTANCE TO PROPERTY LINES

NORTH

0' 150' 300'
SCALE: 1" = 150'

SITE INFORMATION NOTES:

1. THIS PAGE WAS CREATED USING GOOGLE EARTH IMAGERY DATED: 06/10/25 AND HAS NOT BEEN VERIFIED WITH AN ACTUAL SURVEY. ALL DIMENSION ARE ESTIMATED AND ARE FOR REFERENCE ONLY. CONTRACTOR TO VERIFY ALL INFORMATION AND REPORT ANY DISCREPANCIES TO THE ENGINEER PRIOR TO CONSTRUCTION.
2. PROPERTY LINES AND PROPERTY OWNER INFORMATION WAS COMPILED FROM INFORMATION FROM PULASKI COUNTY PROPERTY VALUATION ADMINISTRATOR (PVA) DATED: 10/13/25.

PREPARED FOR:

APC Towers
8601 SIX FORKS RD
RALEIGH, NORTH CAROLINA 27615

PREPARED BY:

TeleCAD Wireless
1961 NORTHPOINT BLVD, SUITE 130
HIXSON, TN 37343
PH: 423-843-9500
FAX: 423-843-9509

DRAWING NOTICE:
THE INFORMATION CONTAINED IN THIS SET OF DOCUMENTS IS PROPRIETARY BY NATURE. ANY USE OR DISCLOSURE OTHER THAN THAT WHICH RELATES TO THE CLIENT IS STRICTLY PROHIBITED.

DRAWN BY:	MDR
CHECKED BY:	DS

REVISIONS

NO.	DATE	BY	DESCRIPTION
1	01/21/26	JAE	ZONING ISSUE
0	11/06/25	JAE	ZONING ISSUE
A	10/14/25	MDR	PRELIMINARY REVIEW

ENGINEER'S STAMP:

STATE OF KENTUCKY
STEPHEN E. HUNT
25003
LICENSED PROFESSIONAL ENGINEER

NOT VALID WITHOUT P.E. STAMP & SIGNATURE

SITE NAME:
LV NANCY DT

ADDRESS:
376 LANETOWN ROAD
NANCY, KY 42544

COUNTY:
PULASKI

LATITUDE:
37° 4' 24.78" N

LONGITUDE:
84° 44' 30.23" W

SITE NUMBER:
KY-4055

SHEET TITLE:
OVERALL SITE PLAN

DRAWING NO.	REVISION:
Z-2	1

SITE INFORMATION NOTES:

1. THIS PAGE WAS CREATED USING GOOGLE EARTH IMAGERY DATED: 06/10/25 AND HAS NOT BEEN VERIFIED WITH AN ACTUAL SURVEY. ALL DIMENSION ARE ESTIMATED AND ARE FOR REFERENCE ONLY. CONTRACTOR TO VERIFY ALL INFORMATION AND REPORT ANY DISCREPANCIES TO THE ENGINEER PRIOR TO CONSTRUCTION.
2. PROPERTY LINES AND PROPERTY OWNER INFORMATION WAS COMPILED FROM INFORMATION FROM PULASKI COUNTY PROPERTY VALUATION ADMINISTRATOR (PVA) DATED: 10/13/25.

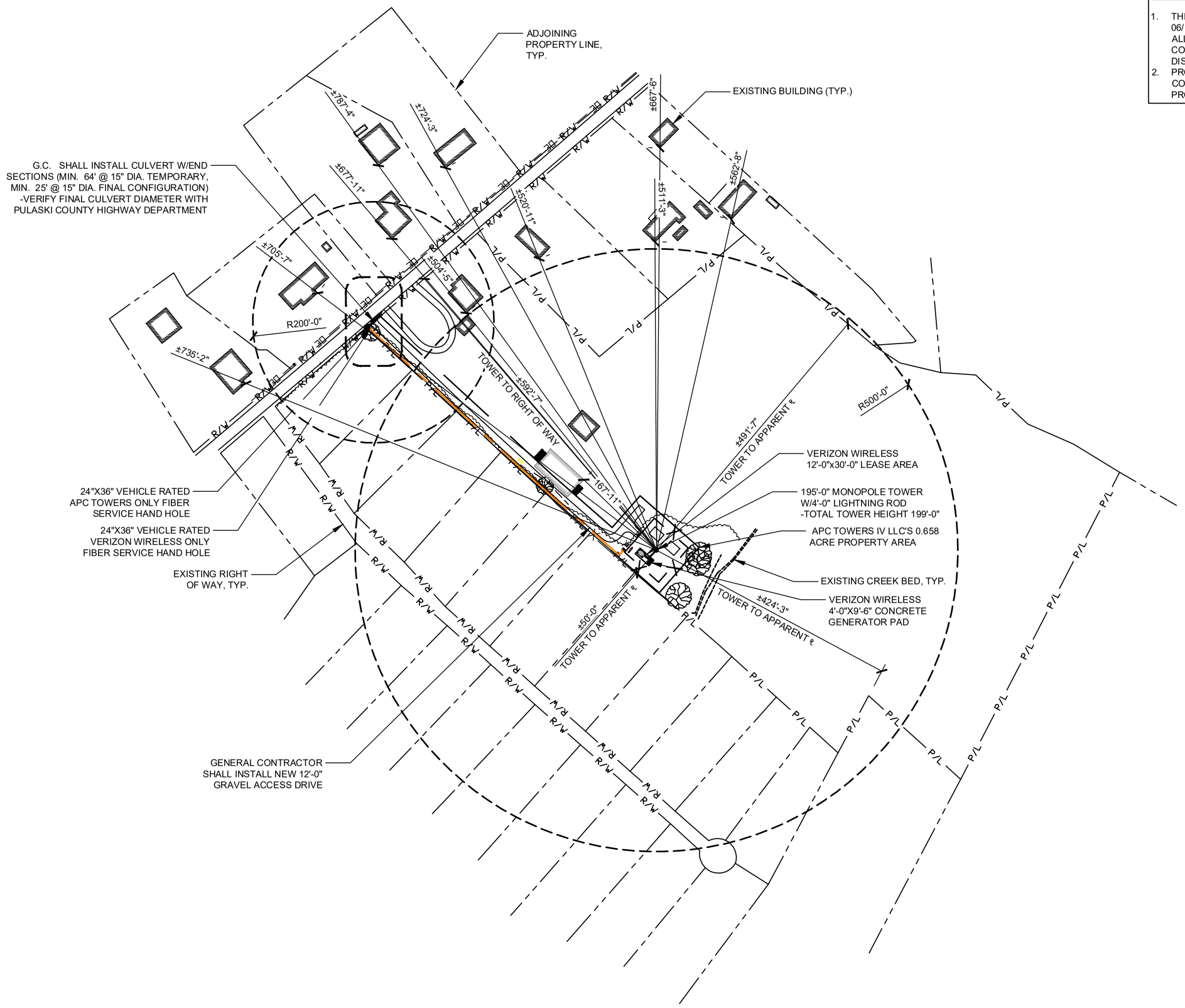

OVERALL SITE PLAN w/TOWER
DISTANCE TO RESIDENTIAL BUILDINGS

NORTH

0' 200' 400'

SCALE: 1" = 200'

Kentucky 811
Know what's below. Call before you dig.
Call Monday thru Friday – 7 am. to 6 pm.
1-800-752-6007
PER KENTUCKY STATE LAW, IT IS AGAINST THE LAW TO EXCAVATE WITHOUT NOTIFYING THE UNDERGROUND LOCATION SERVICE TWO (2) WORKING DAYS BEFORE COMMENCING WORK.

PREPARED FOR:

APC Towers
8601 SIX FORKS RD
RALEIGH, NORTH CAROLINA 27615

PREPARED BY:

TeleCAD Wireless
1961 NORTHPOINT BLVD, SUITE 130
HIXSON, TN 37343
PH: 423-843-9500
FAX: 423-843-9509

DRAWING NOTICE:
THE INFORMATION CONTAINED IN THIS SET OF DOCUMENTS IS PROPRIETARY BY NATURE. ANY USE OR DISCLOSURE OTHER THAN THAT WHICH RELATES TO THE CLIENT IS STRICTLY PROHIBITED.

DRAWN BY:	MDR
CHECKED BY:	DS

REVISIONS

NO.	DATE	BY	DESCRIPTION
1	01/21/26	JAE	ZONING ISSUE
0	11/06/25	JAE	ZONING ISSUE
A	10/14/25	MDR	PRELIMINARY REVIEW

ENGINEER'S STAMP:

STATE OF KENTUCKY
STEPHEN E. HUNT
25003
LICENSED PROFESSIONAL ENGINEER

NOT VALID WITHOUT P.E. STAMP & SIGNATURE

SITE NAME:
LV NANCY DT

ADDRESS:
376 LANETOWN ROAD
NANCY, KY 42544

COUNTY:
PULASKI

LATITUDE:
37° 4' 24.78" N

LONGITUDE:
84° 44' 30.23" W

SITE NUMBER:
KY-4055

SHEET TITLE:
OVERALL SITE PLAN

DRAWING NO.	REVISION:
Z-3	1

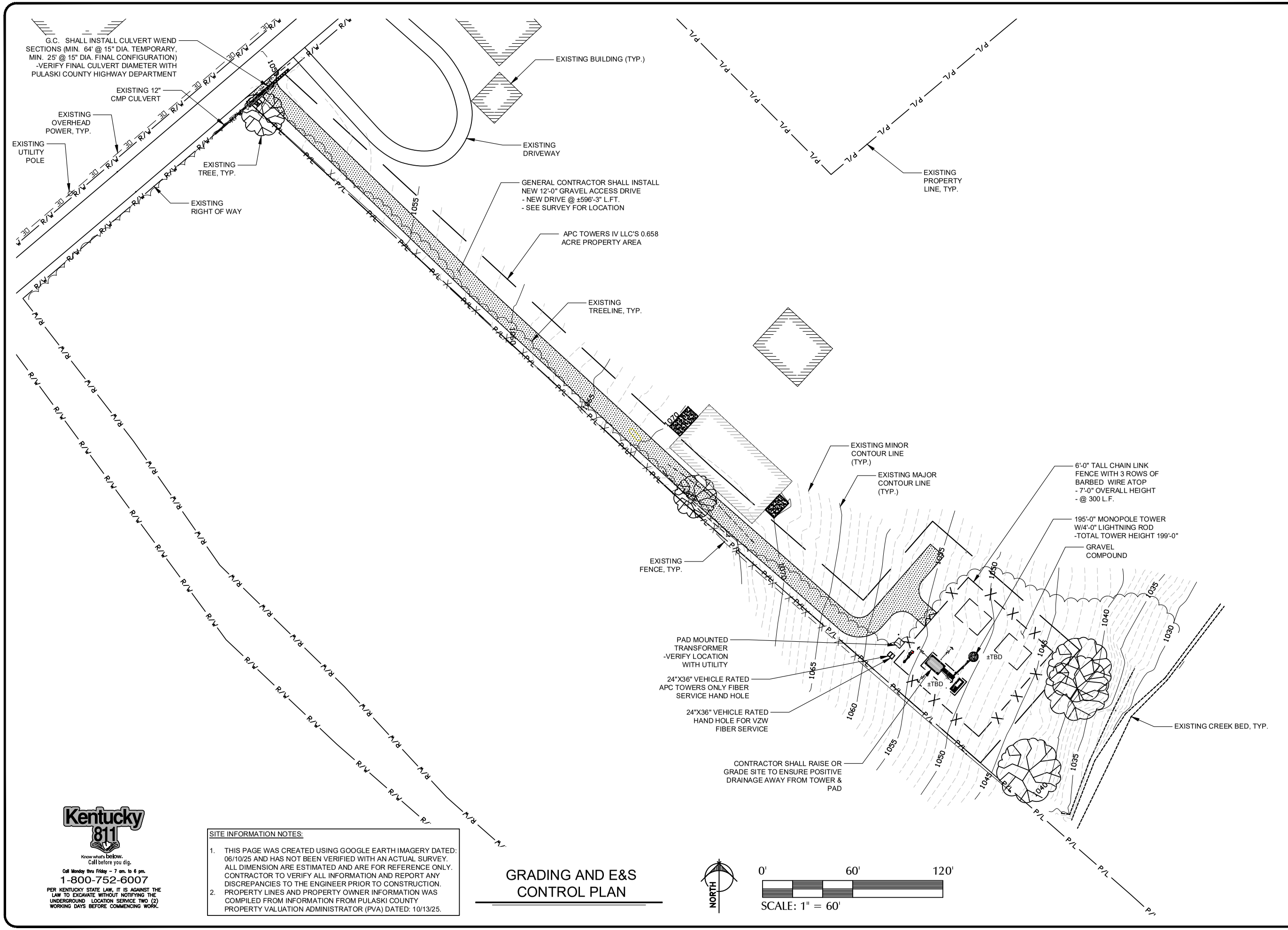

Kentucky 811
Know what's below. Call before you dig.
Call Monday thru Friday – 7 am. to 6 pm.
1-800-752-6007
PER KENTUCKY STATE LAW, IT IS AGAINST THE LAW TO EXCAVATE WITHOUT NOTIFYING THE UNDERGROUND LOCATION SERVICE TWO (2) WORKING DAYS BEFORE COMMENCING WORK.

SITE INFORMATION NOTES:

1. THIS PAGE WAS CREATED USING GOOGLE EARTH IMAGERY DATED: 06/10/25 AND HAS NOT BEEN VERIFIED WITH AN ACTUAL SURVEY. ALL DIMENSION ARE ESTIMATED AND ARE FOR REFERENCE ONLY. CONTRACTOR TO VERIFY ALL INFORMATION AND REPORT ANY DISCREPANCIES TO THE ENGINEER PRIOR TO CONSTRUCTION.
2. PROPERTY LINES AND PROPERTY OWNER INFORMATION WAS COMPILED FROM INFORMATION FROM PULASKI COUNTY PROPERTY VALUATION ADMINISTRATOR (PVA) DATED: 10/13/25.

GRADING AND E&S CONTROL PLAN

PREPARED FOR:

APC Towers
8601 SIX FORKS RD
RALEIGH, NORTH CAROLINA 27615

PREPARED BY:

TeleCAD Wireless
1961 NORTHPOINT BLVD, SUITE 130
HIXSON, TN 37343
PH: 423-843-9500
FAX: 423-843-9509

DRAWN BY:	MDR
CHECKED BY:	DS

REVISIONS

NO.	DATE	BY	DESCRIPTION
1	01/21/26	JAE	ZONING ISSUE
0	11/06/25	JAE	ZONING ISSUE
A	10/14/25	MDR	PRELIMINARY REVIEW

ENGINEER'S STAMP:

STATE OF KENTUCKY
STEPHEN E. HUNT
25003
LICENSED PROFESSIONAL ENGINEER

NOT VALID WITHOUT P.E. STAMP & SIGNATURE

SITE NAME:	LV NANCY DT
ADDRESS:	376 LANETOWN ROAD NANCY, KY 42544
COUNTY:	PULASKI
LATITUDE:	37° 4' 24.78" N
LONGITUDE:	84° 44' 30.23" W
SITE NUMBER:	KY-4055
SHEET TITLE:	GRADING AND E&S CONTROL PLAN
DRAWING NO.:	Z-4
REVISION:	1

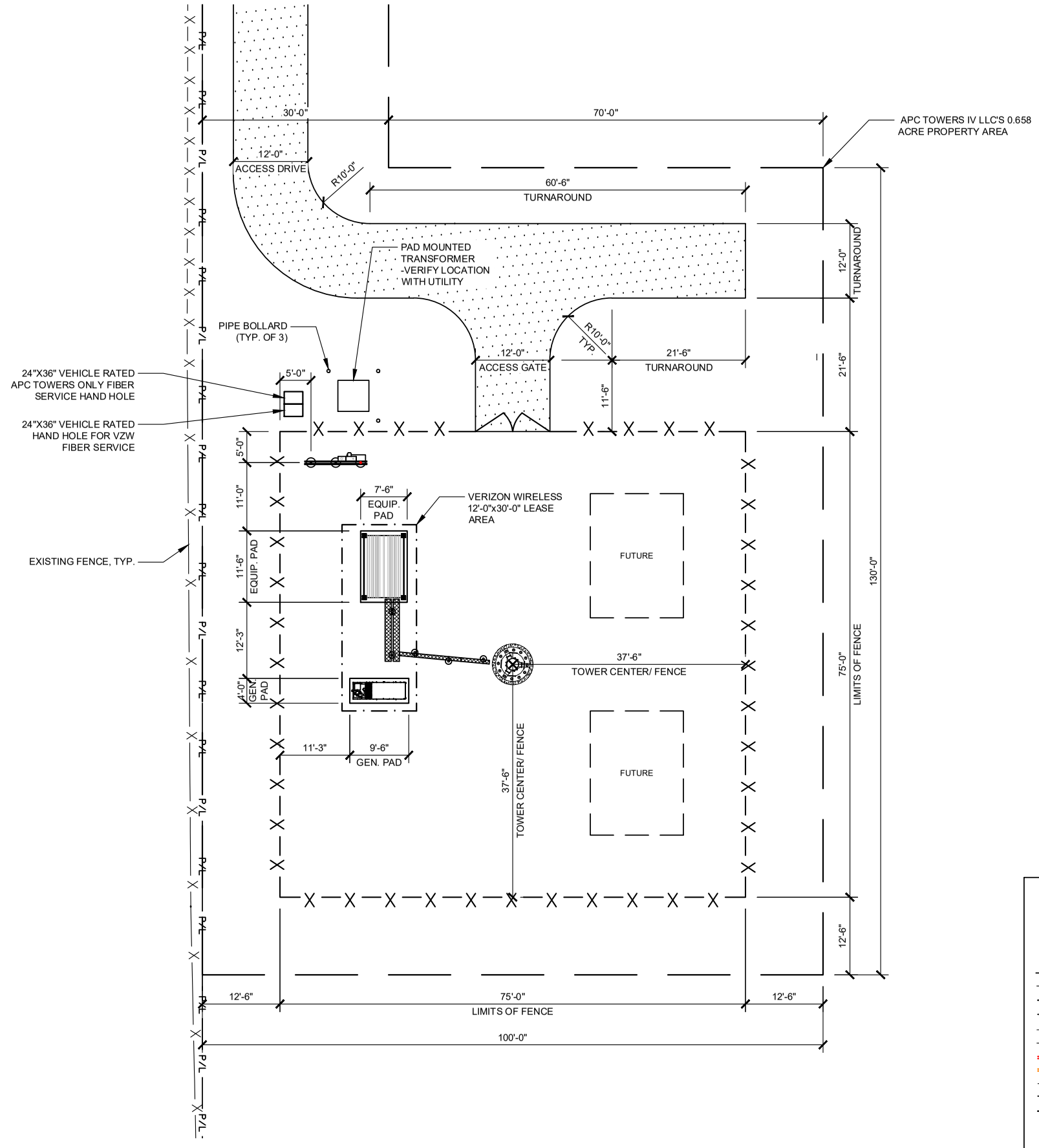

DIMENSIONED SITE PLAN

NORTH

0' 20' 40'

SCALE: 1" = 20'

LEGEND

	IRON PIN
+XXX.XX	DRAINAGE LINE / SPOT ELEVATION
	GRAVEL COMPOUND
	CENTER LINE
	NEW FENCE LINE
	NEW SILT FENCE LINE
	POWER POLE w/OVERHEAD ELEC./TELE.
	EDGE OF NEW DRIVE
	UNDERGROUND ELECTRICAL CONDUIT
	UNDERGROUND TELEPHONE CONDUIT
	EXISTING CONTOURS
	NEW CONTOURS
	NEW LEASE AREA AND EASEMENT
	FENCED COMPOUND
	CONCRETE
	ACCESS DRIVE

Kentucky 811
Know what's below. Call before you dig.
Call Monday thru Friday – 7 am. to 6 pm.
1-800-752-6007
PER KENTUCKY STATE LAW, IT IS AGAINST THE LAW TO EXCAVATE WITHOUT NOTIFYING THE UNDERGROUND LOCATION SERVICE TWO (2) WORKING DAYS BEFORE COMMENCING WORK.

*NOTE:
GENERAL CONTRACTOR IS TO ENSURE THERE IS NO DISTURBANCE OF PROPERTY, SOIL, ETC. OUTSIDE OF THE STAKED LEASE AREA WITHOUT APPROVAL FROM VERIZON WIRELESS CONSTRUCTION MANAGER

PREPARED FOR:

APC Towers
8601 SIX FORKS RD
RALEIGH, NORTH CAROLINA 27615

PREPARED BY:

TeleCAD Wireless
1961 NORTHPOINT BLVD, SUITE 130
HIXSON, TN 37343
PH: 423-843-9500
FAX: 423-843-9509

DRAWING NOTICE:
THE INFORMATION CONTAINED IN THIS SET OF DOCUMENTS IS PROPRIETARY BY NATURE. ANY USE OR DISCLOSURE OTHER THAN THAT WHICH RELATES TO THE CLIENT IS STRICTLY PROHIBITED.

DRAWN BY:	MDR
CHECKED BY:	DS

REVISIONS

NO.	DATE	BY	DESCRIPTION
1	01/21/26	JAE	ZONING ISSUE
0	11/06/25	JAE	ZONING ISSUE
A	10/14/25	MDR	PRELIMINARY REVIEW

ENGINEER'S STAMP:
STATE OF KENTUCKY
STEPHEN E. HUNT
25003
LICENSED PROFESSIONAL ENGINEER
NOT VALID WITHOUT P.E. STAMP & SIGNATURE

SITE NAME:
LV NANCY DT

ADDRESS:
376 LANETOWN ROAD
NANCY, KY 42544

COUNTY:
PULASKI

LATITUDE:
37° 4' 24.78" N

LONGITUDE:
84° 44' 30.23" W

SITE NUMBER:
KY-4055

SHEET TITLE:
DIMENSIONED SITE PLAN

DRAWING NO.	REVISION:
Z-5	1

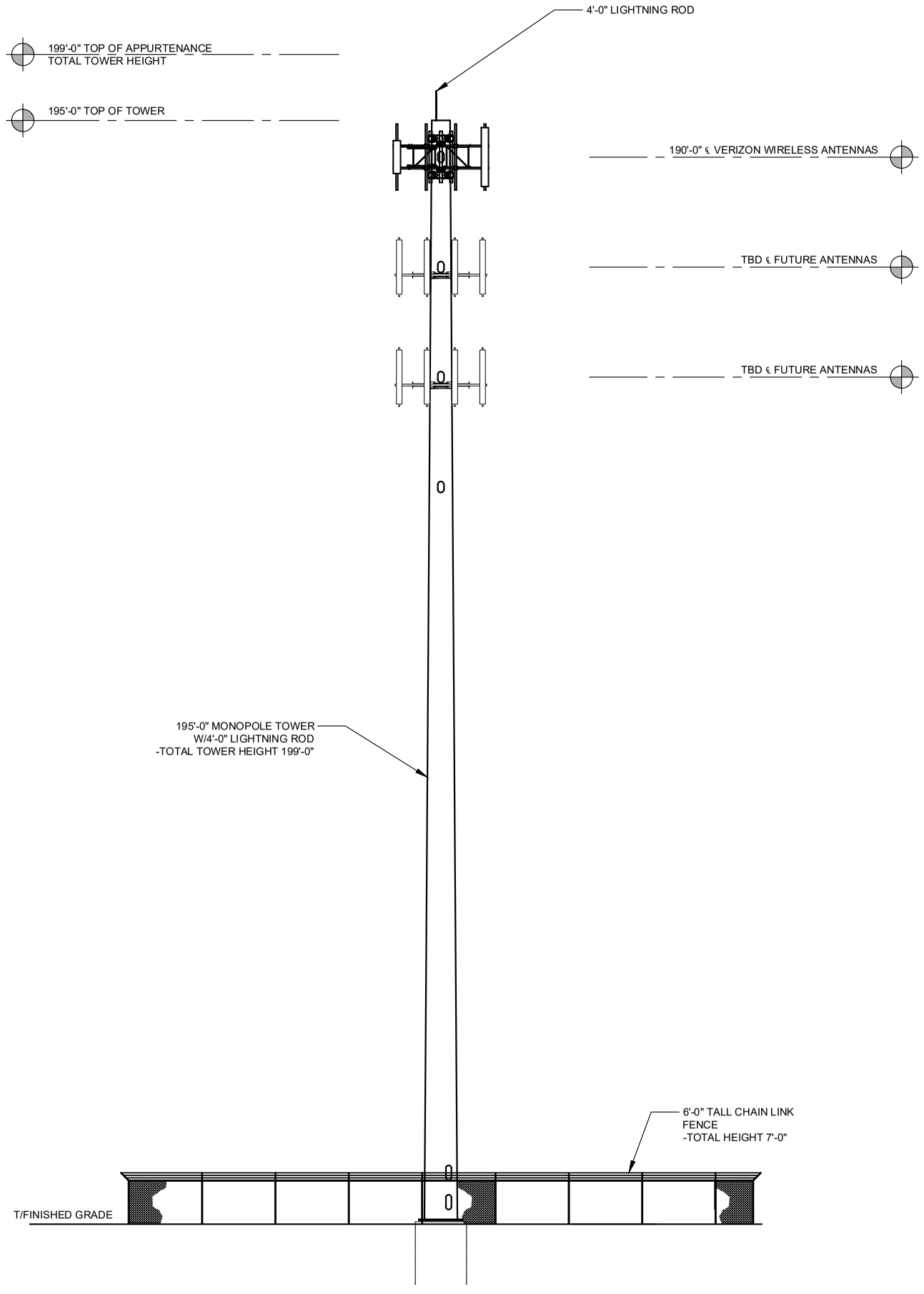

TOWER ELEVATION

SCALE: N.T.S.

PREPARED FOR:

APC Towers

8601 SIX FORKS RD
RALEIGH, NORTH CAROLINA 27615

PREPARED BY:

TeleCAD Wireless

1961 NORTHPOINT BLVD, SUITE 130
HIXSON, TN 37343
PH: 423-843-9500
FAX: 423-843-9509

DRAWING NOTICE:

THE INFORMATION CONTAINED IN THIS SET OF DOCUMENTS IS PROPRIETARY BY NATURE. ANY USE OR DISCLOSURE OTHER THAN THAT WHICH RELATES TO THE CLIENT IS STRICTLY PROHIBITED.

DRAWN BY:	MDR
CHECKED BY:	DS

REVISIONS

NO.	DATE	BY	DESCRIPTION
1	01/21/26	JAE	ZONING ISSUE
0	11/06/25	JAE	ZONING ISSUE
A	10/14/25	MDR	PRELIMINARY REVIEW

ENGINEER'S STAMP:

STATE OF KENTUCKY
STEPHEN E. HUNT
25003
LICENSED PROFESSIONAL ENGINEER

NOT VALID WITHOUT P.E. STAMP & SIGNATURE

SITE NAME:
LV NANCY DT

ADDRESS:
376 LANETOWN ROAD
NANCY, KY 42544

COUNTY:
PULASKI

LATITUDE:
37° 4' 24.78" N

LONGITUDE:
84° 44' 30.23" W

SITE NUMBER:
KY-4055

SHEET TITLE:
TOWER ELEVATION

DRAWING NO.	REVISION:
Z-6	1

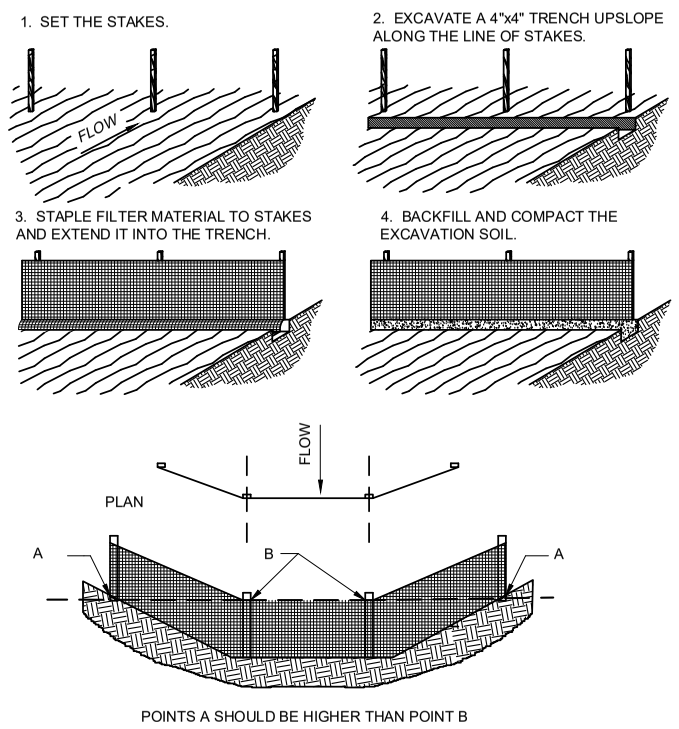

SILT FENCE DETAIL

SCALE: N.T.S.

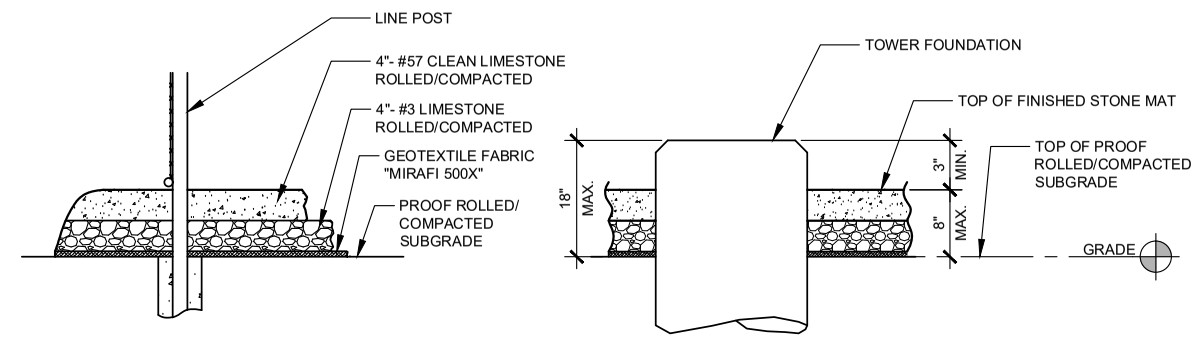

PARTIAL COMPOUND SECTION

SCALE: N.T.S.

NOTE:

1. CONTRACTOR SHALL PRIME & PAINT BOLLARDS OSHA YELLOW

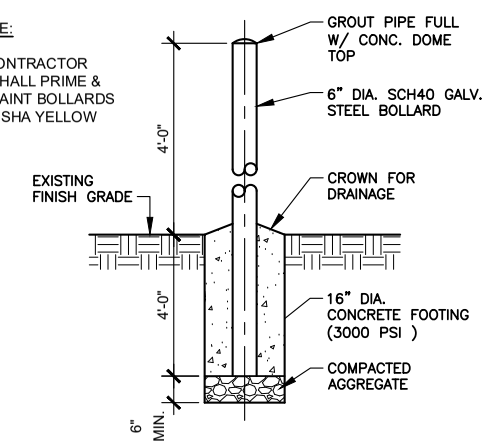

BOLLARD DETAIL

SCALE: N.T.S.

PREPARED FOR:

APC Towers

8601 SIX FORKS RD
RALEIGH, NORTH CAROLINA 27615

PREPARED BY:

TeleCAD Wireless

1961 NORTHPOINT BLVD, SUITE 130
HIXSON, TN 37343
PH: 423-843-9500
FAX: 423-843-9509

DRAWING NOTICE:

THE INFORMATION CONTAINED IN THIS SET OF DOCUMENTS IS PROPRIETARY BY NATURE. ANY USE OR DISCLOSURE OTHER THAN THAT WHICH RELATES TO THE CLIENT IS STRICTLY PROHIBITED.

DRAWN BY:	MDR
CHECKED BY:	DS

REVISIONS

NO.	DATE	BY	DESCRIPTION
1	01/21/26	JAE	ZONING ISSUE
0	11/06/25	JAE	ZONING ISSUE
A	10/14/25	MDR	PRELIMINARY REVIEW

ENGINEER'S STAMP:

STATE OF KENTUCKY
STEPHEN E. HUNT
25003
LICENSED PROFESSIONAL ENGINEER

NOT VALID WITHOUT P.E. STAMP & SIGNATURE

SITE NAME:
LV NANCY DT

ADDRESS:
376 LANETOWN ROAD
NANCY, KY 42544

COUNTY:
PULASKI

LATITUDE:
37° 4' 24.78" N

LONGITUDE:
84° 44' 30.23" W

SITE NUMBER:
KY-4055

SHEET TITLE:
SITE DETAILS

DRAWING NO.	REVISION:
Z-7	1

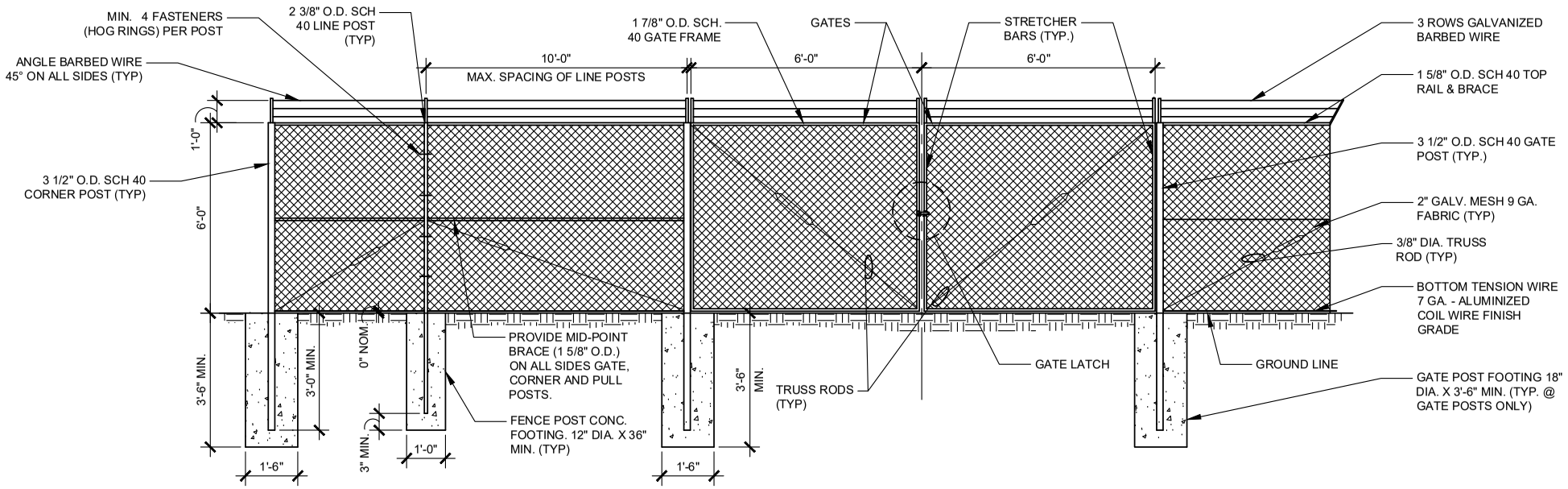

CHAIN LINK FENCE & POST DETAIL

SCALE: N.T.S.

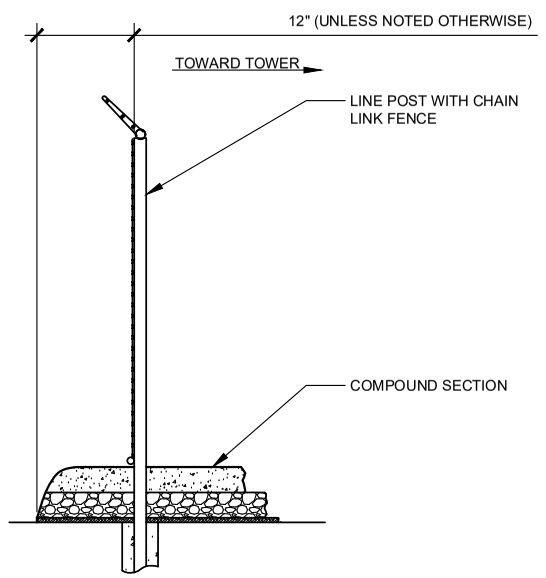

SITE AREA SURFACING

SCALE: N.T.S.

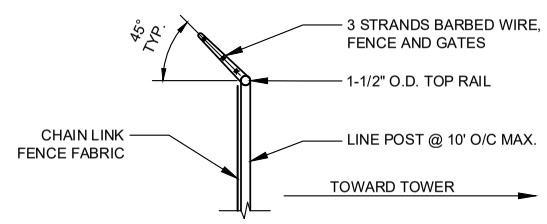

TYPICAL BARBED WIRE DETAIL

SCALE: N.T.S.

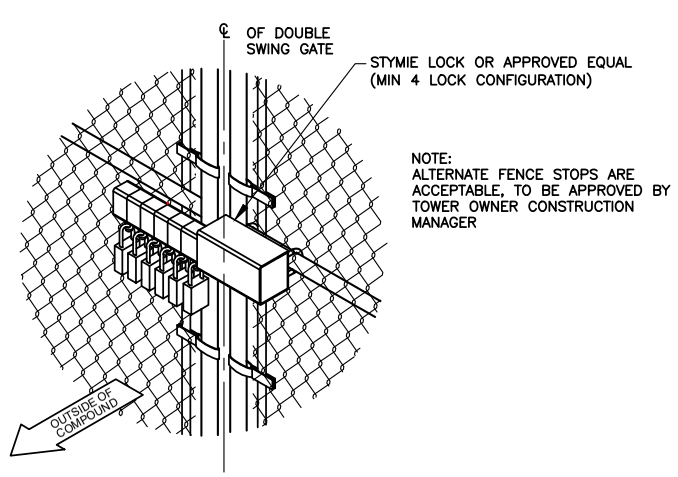

GATE LOCK DETAIL

5 / D-1

SCALE: N.T.S.

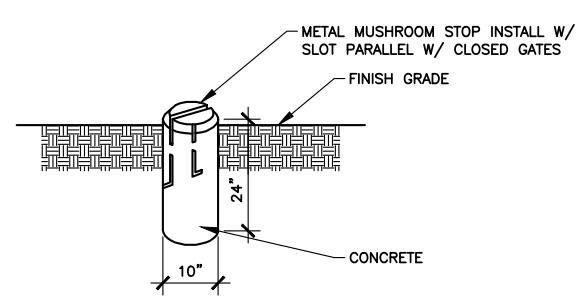

MUSHROOM STOP DETAIL

6 / D-1

SCALE: N.T.S.

CHAIN LINK FENCING NOTES

1. ALL FENCE AND FABRIC SHALL BE HOT DIPPED GALVANIZED WITH A MINIMUM OF 2 OZ. PER SQUARE FOOT, 9 GAUGE WIRE (MIN. BREAKING STRENGTH OF 1,290 LBS) WITH 2" MESH. ALL BARBED WIRE SHALL BE ALUMINUM OR COATED PER NOTE #4.
2. BOTTOM EDGE OF FENCE FABRIC SHALL EXTEND TO FINISHED GRADE.
3. SITE FENCE SHALL BE 6'-0" FABRIC W/ 3 STRAND BARBED WIRE FOR TOTAL HEIGHT OF 7'-0".
4. BARBED WIRE SHALL MEET ASTM A 121, CLASS 3 GALV. OR ASTM A 585, TYPE I, CLASS 2 COATING (NOT LESS THAN 0.8 OZ. PER SQ. FT.) AND SHALL BE THREE STRAND 12.5 GAGE w/4 POINT BARBS AT 5" O/C.
5. BOTTOM OF CONCRETE BASE SHALL BE SET BELOW FROSTLINE (SEE LOCAL CODE). WHERE SOIL BEARING CAPACITY IS LESS THAN 2000 PSF, INCREASE CONCRETE SURROUNDING FENCE POST FOUNDATION DIAMETERS BY 8", PROVIDE CONCRETE WITH A 28 DAY STRENGTH OF 3000 PSI (MIN.)
6. PROVIDE A DIAGONAL BRACE ROD AND TURN BUCKLE ON BOTH GATE LEAFS.
7. ALL RAILS AND BRACES SHALL BE SCHEDULE 40 STEEL PIPE, AND ALL FENCE POSTS SHALL BE SCHEDULE 40 STEEL PIPE, AND BE 2 OZ. GALVANIZED COATED.
8. CONTRACTOR SHALL ENSURE ALL POSTS ARE PLUMB.
9. ALL FENCE SHALL BE FABRICATED AND INSTALLED PER ASTM F2611-15, ASTM F567-14a AND CHAIN LINK FENCE MANUFACTURES INSTITUTE CLFMI-PM 2445.
10. CONTRACTOR SHALL FURNISH AND INSTALL ONE (1) MASTER LOCK LONG SHANK #175LH COMBINATION PADLOCK. COMBINATION TO BE SET AT 7011.

PREPARED FOR:

APC Towers

8601 SIX FORKS RD
RALEIGH, NORTH CAROLINA 27615

PREPARED BY:

TeleCAD Wireless

1961 NORTHPOINT BLVD, SUITE 130
HIXSON, TN 37343
PH: 423-843-9500
FAX: 423-843-9509

DRAWING NOTICE:

DRAWN BY:	MDR
CHECKED BY:	DS

REVISIONS

NO.	DATE	BY	DESCRIPTION
1	01/21/26	JAE	ZONING ISSUE
0	11/06/25	JAE	ZONING ISSUE
A	10/14/25	MDR	PRELIMINARY REVIEW

ENGINEER'S STAMP:

STATE OF KENTUCKY
STEPHEN E. HUNT
25003
LICENSED PROFESSIONAL ENGINEER

NOT VALID WITHOUT P.E. STAMP & SIGNATURE

SITE NAME:
LV NANCY DT

ADDRESS:
376 LANETOWN ROAD
NANCY, KY 42544

COUNTY:
PULASKI

LATITUDE:
37° 4' 24.78" N

LONGITUDE:
84° 44' 30.23" W

SITE NUMBER:
KY-4055

SHEET TITLE:
FENCE DETAILS AND NOTES

DRAWING NO.	REVISION:
Z-8	1

NOTES:

VERIZON WIRELESS SITE ID SIGN, RFE SIGNS, NOC INFORMATION SIGN AND ALL OTHER SIGNAGE NOT REFERENCED IN THIS DRAWING WILL BE FURNISHED AND INSTALLED BY VERIZON WIRELESS PERSONELL PER VERIZON WIRELESS RFC SIGNAGE & DEMARCATION POLICY.

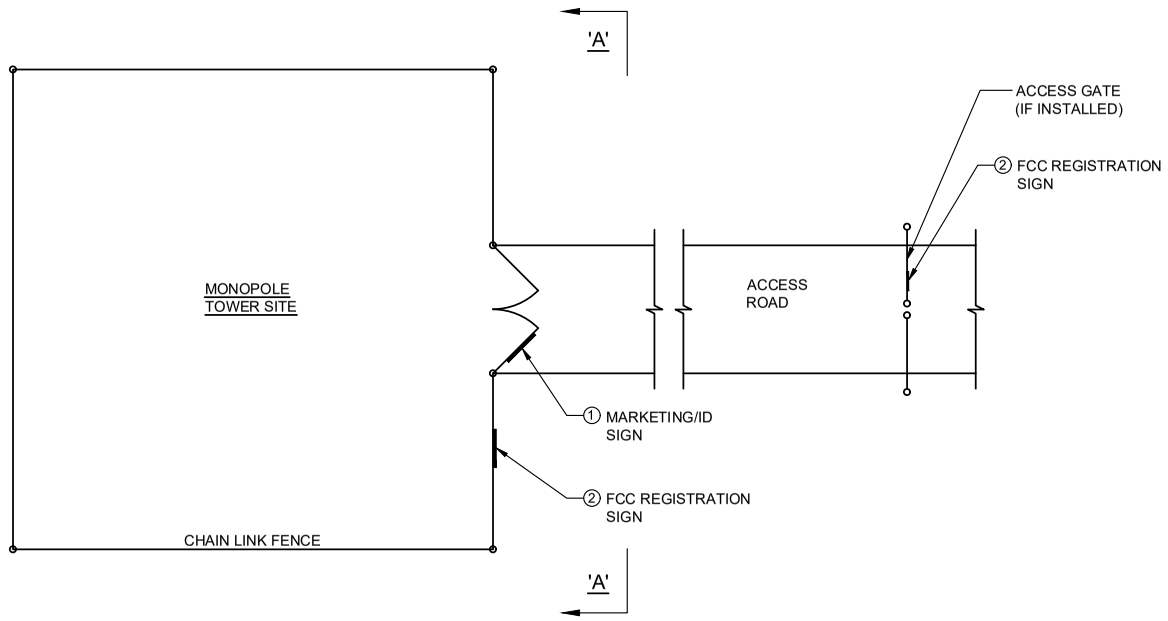

TYPICAL SITE FENCE SIGNAGE PLAN

SCALE: N. T. S.

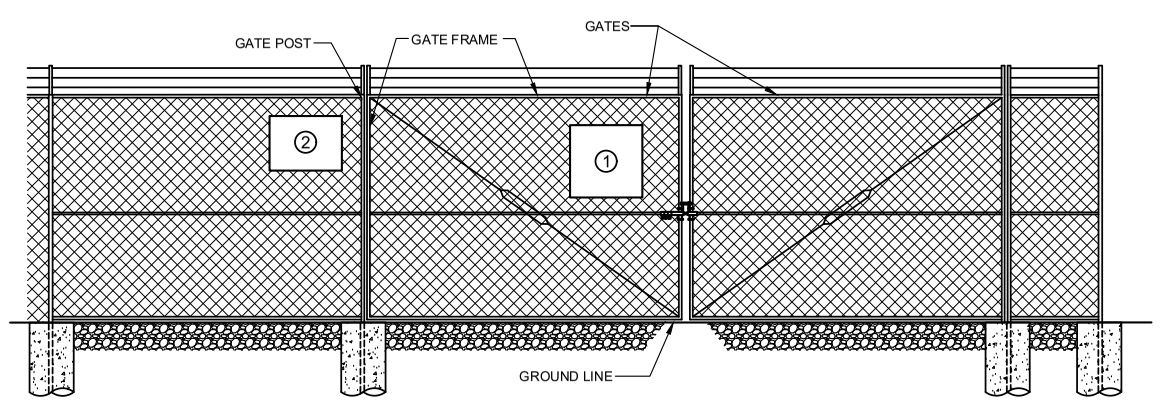

ELEVATION "A-A"

SCALE: N. T. S.

APC Towers

SITE NUMBER: KY-4055

SITE NAME: LV NANCY DT

SITE ADDRESS: 376 LANETOWN ROAD
NANCY, KY 42544

FCC ASR: TBD

NOC/LEASING/EMERGENCY CONTACT

Log in before entering
(800) 640-1379
www.apctowers.com

PRIVATE PROPERTY- NO TRESPASSING

WHITE BACKGROUND w/BLACK LETTERING

MARKETING/ID SIGN 1

24" WIDE x 32" HIGH

FCC ANTENNA
STRUCTURE
REGISTRATION

WHITE BACKGROUND w/BLACK LETTERING

FCC REGISTRATION SIGN 2

24" WIDE x 18" HIGH

PREPARED FOR:

APC Towers
8601 SIX FORKS RD
RALEIGH, NORTH CAROLINA 27615

PREPARED BY:

TeleCAD Wireless
1961 NORTHPOINT BLVD, SUITE 130
HIXSON, TN 37343
PH: 423-843-9500
FAX: 423-843-9509

DRAWING NOTICE:
THE INFORMATION CONTAINED IN THIS SET OF DOCUMENTS IS PROPRIETARY BY NATURE. ANY USE OR DISCLOSURE OTHER THAN THAT WHICH RELATES TO THE CLIENT IS STRICTLY PROHIBITED.

DRAWN BY:	MDR
CHECKED BY:	DS

REVISIONS

NO.	DATE	BY	DESCRIPTION
1	01/21/26	JAE	ZONING ISSUE
0	11/06/25	JAE	ZONING ISSUE
A	10/14/25	MDR	PRELIMINARY REVIEW

ENGINEER'S STAMP:

STATE OF KENTUCKY
STEPHEN E. HUNT
25003
LICENSED PROFESSIONAL ENGINEER

NOT VALID WITHOUT P.E. STAMP & SIGNATURE

SITE NAME:
LV NANCY DT

ADDRESS:
376 LANETOWN ROAD
NANCY, KY 42544

COUNTY:
PULASKI

LATITUDE:
37° 4' 24.78" N

LONGITUDE:
84° 44' 30.23" W

SITE NUMBER:
KY-4055

SHEET TITLE:
TOWER OWNER SIGNAGE

DRAWING NO.	REVISION:
Z-9	1

Section	Length (ft)	Number of Sides	Thickness (in)	Socket Length (ft)	Top Dia (in)	Bot Dia (in)	Grade	Weight (K)
1	53.000	18	0.250	4.250	20.000	30.070	A572-65	3.5
2	53.000	18	0.312	5.500	28.762	38.833	A572-65	6.0
3	53.000	18	0.375	6.750	37.163	47.233	A572-65	9.0
4	51.500	18	0.438		45.200	54.985	A572-65	12.1
								30.6

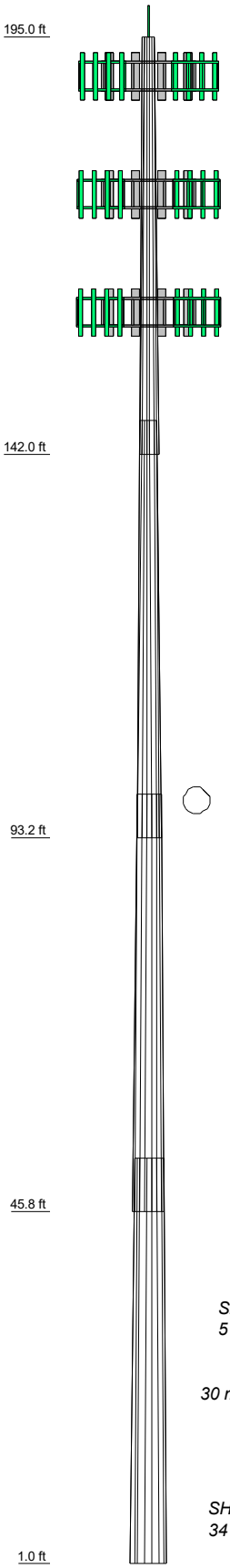

ALL REACTIONS ARE FACTORED

AXIAL 93 K
SHEAR 5 K
MOMENT 867 kip-ft
TORQUE 1 kip-ft
30 mph WIND - 1.500 in ICE

AXIAL 53 K
SHEAR 34 K
MOMENT 5028 kip-ft
TORQUE 9 kip-ft
REACTIONS - 105 mph WIND

DESIGNED APPURTENANCE LOADING

TYPE	ELEVATION	TYPE	ELEVATION
4' Lightning Rod	197	Sector3(CaAa=10000 Sq.in)No Ice (Carrier 2)	175
Sector1(CaAa=14000 Sq.in)No Ice (Carrier 1)	190	Sector1(CaAa=10000 Sq.in)No Ice (Carrier 3)	160
Sector2(CaAa=14000 Sq.in)No Ice (Carrier 1)	190	Sector2(CaAa=10000 Sq.in)No Ice (Carrier 3)	160
Sector3(CaAa=14000 Sq.in)No Ice (Carrier 1)	190	Sector3(CaAa=10000 Sq.in)No Ice (Carrier 3)	160
Sector1(CaAa=10000 Sq.in)No Ice (Carrier 2)	175		
Sector2(CaAa=10000 Sq.in)No Ice (Carrier 2)	175		

MATERIAL STRENGTH

GRADE	Fy	Fu	GRADE	Fy	Fu
A572-65	65 ksi	80 ksi			

TOWER DESIGN NOTES

1. Tower is located in Pulaski County, Kentucky.
2. Tower designed for Exposure C to the TIA-222-H Standard.
3. Tower designed for a 105 mph basic wind in accordance with the TIA-222-H Standard.
4. Tower is also designed for a 30 mph basic wind with 1.50 in ice. Ice is considered to increase in thickness with height.
5. Deflections are based upon a 60 mph wind.
6. Tower Risk Category II.
7. Topographic Category 1 with Crest Height of 0.000 ft
8. Please see feedline plan for proper feedline placement. Deviation from plan may reduce tower capacity.

STATE OF KENTUCKY
BRAD R. MILANOWSKI
25311
LICENSED PROFESSIONAL ENGINEER
1/27/26

ARCOSA
TELECOM STRUCTURES

B+T GRP
B+T Group
1717 S Boulder Ave, Suite 300
Tulsa, OK 74119
Phone: (918) 587-4630
FAX: (918) 295-0265

Job: ATS# C177 - LV Nancy DT (Site# KY-4055)			
Project: 195' MP/37.074509, -84.741345			
Client: APC Towers	Drawn by: Coody	App'd:	
Code: TIA-222-H	Date: 01/27/26	Scale: NTS	
Path: S:\Projects\Arcosa Telecom Structures\104150_LV Nancy DT_C177\Engineering\tnxTower\1225-038_195MP_LV Nancy DT.eri		Dwg No. E-1	

Feed Line Plan

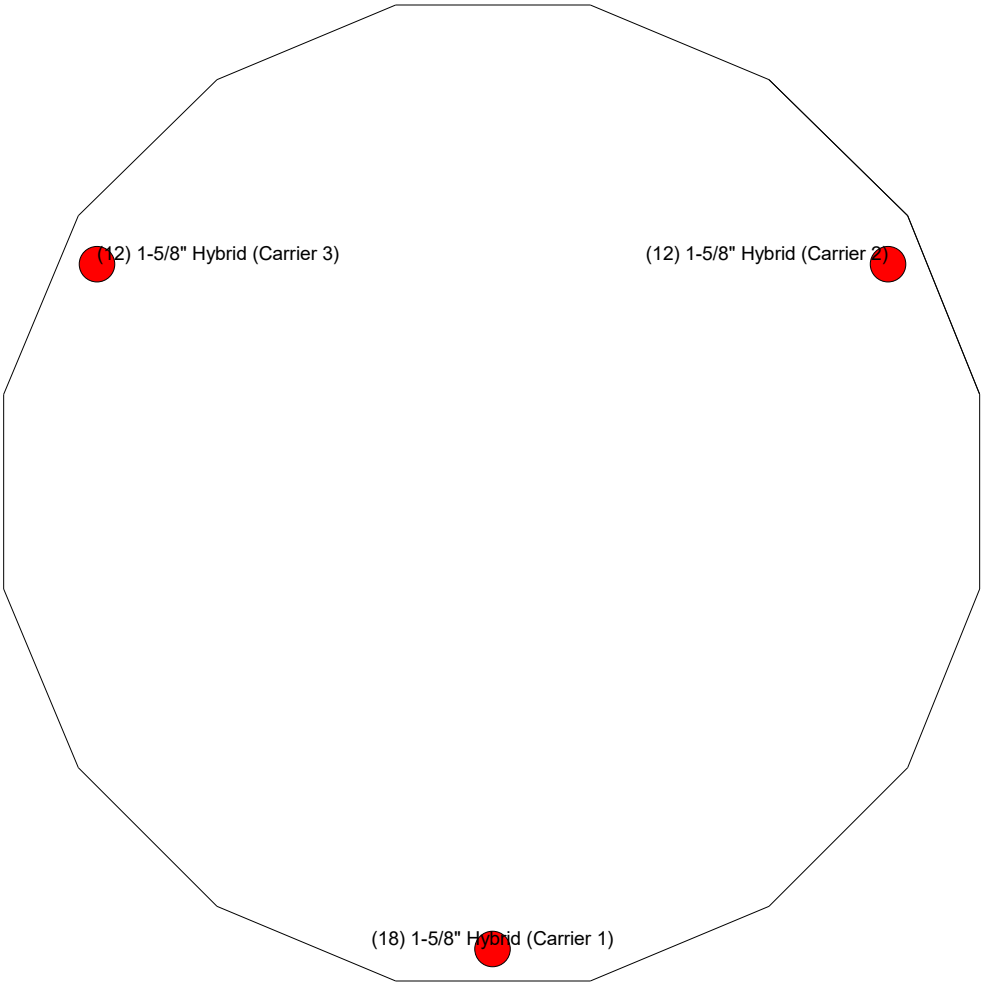

STATE OF KENTUCKY
BRAD R. MILANOWSKI
25311
LICENSED PROFESSIONAL ENGINEER
1/27/26

ARCOSA TELECOM STRUCTURES

B+T GRP
B+T Group
1717 S Boulder Ave, Suite 300
Tulsa, OK 74119
Phone: (918) 587-4630
FAX: (918) 295-0265

Job: ***ATS# C177 - LV Nancy DT (Site# KY-4055)***		
Project: ***195' MP/37.074509, -84.741345***		
Client: APC Towers	Drawn by: Coody	App'd:
Code: TIA-222-H	Date: 01/27/26	Scale: NTS
Path: S:\Projects\Arcosa Telecom Structures\104150_LV Nancy DT_C177\Engineering\tnxTower\1225-038_195MP_LV Nancy DT.eri		Dwg No. E-7

Tower Input Data

The tower is a monopole.
This tower is designed using the TIA-222-H standard.
The following design criteria apply:

Tower is located in Pulaski County, Kentucky.
Tower base elevation above sea level: 1041.000 ft.
Basic wind speed of 105 mph.
Risk Category II.
Exposure Category C.
Simplified Topographic Factor Procedure for wind speed-up calculations is used.
Topographic Category: 1.
Crest Height: 0.000 ft.
Nominal ice thickness of 1.500 in.
Ice thickness is considered to increase with height.
Ice density of 56.000 pcf.
A wind speed of 30 mph is used in combination with ice.
Temperature drop of 50.000 °F.
Deflections calculated using a wind speed of 60 mph.
Please see feedline plan for proper feedline placement. Deviation from plan may reduce tower capacity..
Non-linear (P-delta) analysis was used.
Pressures are calculated at each section.
Stress ratio used in pole design is 1.
Local bending stresses due to climbing loads, feed line supports, and appurtenance mounts are not considered.

Options

Consider Moments - Legs
Consider Moments - Horizontals
Consider Moments - Diagonals
Use Moment Magnification
√ Use Code Stress Ratios
√ Use Code Safety Factors - Guys
Escalate Ice
Always Use Max Kz
Kz In Exposure D Hurricane Region
Include Bolts In Member Capacity
Leg Bolts Are At Top Of Section
Secondary Horizontal Braces Leg
Use Diamond Inner Bracing (4 Sided)
SR Members Have Cut Ends
SR Members Are Concentric
Distribute Leg Loads As Uniform
Use Special Wind Profile

Assume Legs Pinned
√ Assume Rigid Index Plate
√ Use Clear Spans For Wind Area
Use Clear Spans For KL/r
Retension Guys To Initial Tension
√ Bypass Mast Stability Checks
√ Use Azimuth Dish Coefficients
√ Project Wind Area of Appurtenances
Alternative Appurt. EPA Calculation
Autocalc Torque Arm Areas
Add IBC .6D+W Combination
Sort Capacity Reports By Component
Triangulate Diamond Inner Bracing
Treat Feed Line Bundles As Cylinder
Ignore KL/ry For 60 Deg. Angle Legs
Use ASCE 10 X-Brace Ly Rules

Calculate Redundant Bracing Forces
Ignore Redundant Members in FEA
SR Leg Bolts Resist Compression
All Leg Panels Have Same Allowable
Offset Girt At Foundation
√ Consider Feed Line Torque
Include Angle Block Shear Check
Use TIA-222-H Bracing Resist. Exemption
Use TIA-222-H Tension Splice Exemption

Poles

Include Shear-Torsion Interaction
Always Use Sub-Critical Flow
Use Top Mounted Sockets
Pole Without Linear Attachments
Pole With Shroud Or No Appurtenances
Outside and Inside Corner Radii Are Known

Tapered Pole Section Geometry

Section	*Elevation* *ft*	*Section Length* *ft*	*Splice Length* *ft*	*Number of Sides*	*Top Diameter* *in*	*Bottom Diameter* *in*	*Wall Thickness* *in*	*Bend Radius* *in*	*Pole Grade*
L1	195.000-142.00	53.000	4.250	18	20.000	30.070	0.250	1.000	A572-65

Section	Elevation ft	Section Length ft	Splice Length ft	Number of Sides	Top Diameter in	Bottom Diameter in	Wall Thickness in	Bend Radius in	Pole Grade
	0								(65 ksi)
L2	142.000-93.250	53.000	5.500	18	28.762	38.833	0.312	1.250	A572-65 (65 ksi)
L3	93.250-45.750	53.000	6.750	18	37.163	47.233	0.375	1.500	A572-65 (65 ksi)
L4	45.750-1.000	51.500		18	45.200	54.985	0.438	1.750	A572-65 (65 ksi)

Tapered Pole Properties

Section	Tip Dia. in	Area in^2	I in^4	r in	C in	I/C in^3	J in^4	It/Q in^2	w in	w/t
L1	20.270	15.672	772.299	7.011	10.160	76.014	1545.615	7.837	3.080	12.32
	30.495	23.662	2658.320	10.586	15.276	174.024	5320.138	11.833	4.852	19.409
L2	29.978	28.219	2885.634	10.100	14.611	197.493	5775.064	14.112	4.512	14.439
	39.383	38.207	7162.312	13.675	19.727	363.073	14334.048	19.107	6.285	20.11
L3	38.739	43.786	7486.459	13.060	18.879	396.559	14982.769	21.897	5.881	15.682
	47.903	55.772	15470.807	16.634	23.994	644.775	30961.972	27.891	7.653	20.408
L4	47.132	62.158	15734.952	15.891	22.962	685.272	31490.609	31.085	7.185	16.423
	55.766	75.746	28473.902	19.364	27.932	1019.387	56985.270	37.880	8.907	20.36

Tower Elevation ft	Gusset Area (per face) ft^2	Gusset Thickness in	Gusset Grade	Adjust. Factor A_f	Adjust. Factor A_r	Weight Mult.	Double Angle Stitch Bolt Spacing Diagonals in	Double Angle Stitch Bolt Spacing Horizontals in	Double Angle Stitch Bolt Spacing Redundants in
L1 195.000-142.000				1	1	1			
L2 142.000-93.250				1	1	1			
L3 93.250-45.750				1	1	1			
L4 45.750-1.000				1	1	1			

Monopole Base Plate Data

Base Plate Data	
Base plate is square	√
Base plate is grouted	
Anchor bolt grade	A615-75
Anchor bolt size	2.250 in
Number of bolts	20
Embedment length	72.000 in
f'_c	4.000 ksi
Grout space	2.250 in
Base plate grade	A572-50
Base plate thickness	2.750 in
Bolt circle diameter	62.000 in
Outer diameter	64.000 in

Base Plate Data	
Inner diameter	36.657 in
Corner clippled	8.000 in
Base plate type	Plain Plate

Feed Line/Linear Appurtenances - Entered As Round Or Flat

Description	Sector	Exclude From Torque Calculation	Component Type	Placement ft	Total Number	Number Per Row	Start/End Position	Width or Diameter in	Perimeter in	Weight klf
**										
Safety Line 3/8	A	No	Surface Ar (CaAa)	195.000 - 10.000	1	1	0.000 0.010	0.375		0.000
**										

Feed Line/Linear Appurtenances - Entered As Area

Description	Face or Leg	Allow Shield	Exclude From Torque Calculation	Component Type	Placement ft	Total Number		C_AA_A ft^2/ft	Weight klf
1-5/8" Hybrid (Carrier 1)	C	No	No	Inside Pole	190.000 - 10.000	18	No Ice	0.000	0.001
							1/2" Ice	0.000	0.001
							1" Ice	0.000	0.001
							2" Ice	0.000	0.001
**									
1-5/8" Hybrid (Carrier 2)	B	No	No	Inside Pole	175.000 - 10.000	12	No Ice	0.000	0.001
							1/2" Ice	0.000	0.001
							1" Ice	0.000	0.001
							2" Ice	0.000	0.001
**									
1-5/8" Hybrid (Carrier 3)	A	No	No	Inside Pole	160.000 - 10.000	12	No Ice	0.000	0.001
							1/2" Ice	0.000	0.001
							1" Ice	0.000	0.001
							2" Ice	0.000	0.001
**									

Feed Line/Linear Appurtenances Section Areas

Tower Section	Tower Elevation ft	Face	A_R ft^2	A_F ft^2	C_AA_A In Face ft^2	C_AA_A Out Face ft^2	Weight K
L1	195.000-142.000	A	0.000	0.000	1.987	0.000	0.236
		B	0.000	0.000	0.000	0.000	0.412
		C	0.000	0.000	0.000	0.000	0.899
L2	142.000-93.250	A	0.000	0.000	1.828	0.000	0.619
		B	0.000	0.000	0.000	0.000	0.608
		C	0.000	0.000	0.000	0.000	0.913
L3	93.250-45.750	A	0.000	0.000	1.781	0.000	0.603
		B	0.000	0.000	0.000	0.000	0.593
		C	0.000	0.000	0.000	0.000	0.889

Tower Section	Tower Elevation ft	Face	A_R ft^2	A_F ft^2	C_AA_A In Face ft^2	C_AA_A Out Face ft^2	Weight K
L4	45.750-1.000	A	0.000	0.000	1.341	0.000	0.454
		B	0.000	0.000	0.000	0.000	0.446
		C	0.000	0.000	0.000	0.000	0.669

Feed Line/Linear Appurtenances Section Areas - With Ice

Tower Section	Tower Elevation ft	Face or Leg	Ice Thickness in	A_R ft^2	A_F ft^2	C_AA_A In Face ft^2	C_AA_A Out Face ft^2	Weight K
L1	195.000-142.000	A	1.764	0.000	0.000	20.686	0.000	0.481
		B		0.000	0.000	0.000	0.000	0.412
		C		0.000	0.000	0.000	0.000	0.899
L2	142.000-93.250	A	1.702	0.000	0.000	19.027	0.000	0.844
		B		0.000	0.000	0.000	0.000	0.608
		C		0.000	0.000	0.000	0.000	0.913
L3	93.250-45.750	A	1.615	0.000	0.000	17.951	0.000	0.808
		B		0.000	0.000	0.000	0.000	0.593
		C		0.000	0.000	0.000	0.000	0.889
L4	45.750-1.000	A	1.451	0.000	0.000	12.888	0.000	0.594
		B		0.000	0.000	0.000	0.000	0.446
		C		0.000	0.000	0.000	0.000	0.669

Feed Line Center of Pressure

Section	Elevation ft	CP_X in	CP_Z in	CP_X Ice in	CP_Z Ice in
L1	195.000-142.000	-0.259	-0.153	-1.301	-0.769
L2	142.000-93.250	-0.260	-0.154	-1.383	-0.818
L3	93.250-45.750	-0.260	-0.154	-1.393	-0.824
L4	45.750-1.000	-0.205	-0.121	-1.088	-0.644

Note: For pole sections, center of pressure calculations do not consider feed line shielding.

Shielding Factor Ka

Tower Section	Feed Line Record No.	Description	Feed Line Segment Elev.	K_a No Ice	K_a Ice
L1	7	Safety Line 3/8	142.00 - 195.00	1.0000	1.0000
L2	7	Safety Line 3/8	93.25 - 142.00	1.0000	1.0000
L3	7	Safety Line 3/8	45.75 - 93.25	1.0000	1.0000
L4	7	Safety Line 3/8	10.00 - 45.75	1.0000	1.0000

Discrete Tower Loads

Description	Face or Leg	Offset Type	Offsets: Horz Lateral Vert ft ft ft	Azimuth Adjustment °	Placement ft		C_AA_A Front ft^2	C_AA_A Side ft^2	Weight K
4' Lightning Rod	C	None		0.000	197.000	No Ice	1.000	1.000	0.040
						1/2" Ice	2.017	2.017	0.049
						1" Ice	3.050	3.050	0.065
						2" Ice	5.148	5.148	0.116
**									
Sector1(CaAa=14000	A	From Leg	4.000	0.000	190.000	No Ice	97.222	65.138	0.700
Sq.in)No Ice			0.000			1/2" Ice	121.527	81.423	1.400
(Carrier 1)			0.000			1" Ice	145.832	97.708	2.100
						2" Ice	194.442	130.278	3.500
Sector2(CaAa=14000	B	From Leg	4.000	0.000	190.000	No Ice	97.222	65.138	0.700
Sq.in)No Ice			0.000			1/2" Ice	121.527	81.423	1.400
(Carrier 1)			0.000			1" Ice	145.832	97.708	2.100
						2" Ice	194.442	130.278	3.500
Sector3(CaAa=14000	C	From Leg	4.000	0.000	190.000	No Ice	97.222	65.138	0.700
Sq.in)No Ice			0.000			1/2" Ice	121.527	81.423	1.400
(Carrier 1)			0.000			1" Ice	145.832	97.708	2.100
						2" Ice	194.442	130.278	3.500
**									
Sector1(CaAa=10000	A	From Leg	4.000	0.000	175.000	No Ice	69.444	46.527	0.700
Sq.in)No Ice			0.000			1/2" Ice	86.805	58.159	1.400
(Carrier 2)			0.000			1" Ice	104.166	69.791	2.100
						2" Ice	138.888	93.055	3.500
Sector2(CaAa=10000	B	From Leg	4.000	0.000	175.000	No Ice	69.444	46.527	0.700
Sq.in)No Ice			0.000			1/2" Ice	86.805	58.159	1.400
(Carrier 2)			0.000			1" Ice	104.166	69.791	2.100
						2" Ice	138.888	93.055	3.500
Sector3(CaAa=10000	C	From Leg	4.000	0.000	175.000	No Ice	69.444	46.527	0.700
Sq.in)No Ice			0.000			1/2" Ice	86.805	58.159	1.400
(Carrier 2)			0.000			1" Ice	104.166	69.791	2.100
						2" Ice	138.888	93.055	3.500
**									
Sector1(CaAa=10000	A	From Leg	4.000	0.000	160.000	No Ice	69.444	46.527	0.700
Sq.in)No Ice			0.000			1/2" Ice	86.805	58.159	1.400
(Carrier 3)			0.000			1" Ice	104.166	69.791	2.100
						2" Ice	138.888	93.055	3.500
Sector2(CaAa=10000	B	From Leg	4.000	0.000	160.000	No Ice	69.444	46.527	0.700
Sq.in)No Ice			0.000			1/2" Ice	86.805	58.159	1.400
(Carrier 3)			0.000			1" Ice	104.166	69.791	2.100
						2" Ice	138.888	93.055	3.500
Sector3(CaAa=10000	C	From Leg	4.000	0.000	160.000	No Ice	69.444	46.527	0.700
Sq.in)No Ice			0.000			1/2" Ice	86.805	58.159	1.400
(Carrier 3)			0.000			1" Ice	104.166	69.791	2.100
						2" Ice	138.888	93.055	3.500
**									

Load Combinations

Comb. No.	Description
1	Dead Only
2	1.2 Dead+1.0 Wind 0 deg - No Ice
3	0.9 Dead+1.0 Wind 0 deg - No Ice
4	1.2 Dead+1.0 Wind 30 deg - No Ice
5	0.9 Dead+1.0 Wind 30 deg - No Ice
6	1.2 Dead+1.0 Wind 60 deg - No Ice
7	0.9 Dead+1.0 Wind 60 deg - No Ice
8	1.2 Dead+1.0 Wind 90 deg - No Ice
9	0.9 Dead+1.0 Wind 90 deg - No Ice
10	1.2 Dead+1.0 Wind 120 deg - No Ice
11	0.9 Dead+1.0 Wind 120 deg - No Ice
12	1.2 Dead+1.0 Wind 150 deg - No Ice
13	0.9 Dead+1.0 Wind 150 deg - No Ice
14	1.2 Dead+1.0 Wind 180 deg - No Ice
15	0.9 Dead+1.0 Wind 180 deg - No Ice
16	1.2 Dead+1.0 Wind 210 deg - No Ice
17	0.9 Dead+1.0 Wind 210 deg - No Ice
18	1.2 Dead+1.0 Wind 240 deg - No Ice
19	0.9 Dead+1.0 Wind 240 deg - No Ice
20	1.2 Dead+1.0 Wind 270 deg - No Ice
21	0.9 Dead+1.0 Wind 270 deg - No Ice
22	1.2 Dead+1.0 Wind 300 deg - No Ice
23	0.9 Dead+1.0 Wind 300 deg - No Ice
24	1.2 Dead+1.0 Wind 330 deg - No Ice
25	0.9 Dead+1.0 Wind 330 deg - No Ice
26	1.2 Dead+1.0 Ice+1.0 Temp
27	1.2 Dead+1.0 Wind 0 deg+1.0 Ice+1.0 Temp
28	1.2 Dead+1.0 Wind 30 deg+1.0 Ice+1.0 Temp
29	1.2 Dead+1.0 Wind 60 deg+1.0 Ice+1.0 Temp
30	1.2 Dead+1.0 Wind 90 deg+1.0 Ice+1.0 Temp
31	1.2 Dead+1.0 Wind 120 deg+1.0 Ice+1.0 Temp
32	1.2 Dead+1.0 Wind 150 deg+1.0 Ice+1.0 Temp
33	1.2 Dead+1.0 Wind 180 deg+1.0 Ice+1.0 Temp
34	1.2 Dead+1.0 Wind 210 deg+1.0 Ice+1.0 Temp
35	1.2 Dead+1.0 Wind 240 deg+1.0 Ice+1.0 Temp
36	1.2 Dead+1.0 Wind 270 deg+1.0 Ice+1.0 Temp
37	1.2 Dead+1.0 Wind 300 deg+1.0 Ice+1.0 Temp
38	1.2 Dead+1.0 Wind 330 deg+1.0 Ice+1.0 Temp
39	Dead+Wind 0 deg - Service
40	Dead+Wind 30 deg - Service
41	Dead+Wind 60 deg - Service
42	Dead+Wind 90 deg - Service
43	Dead+Wind 120 deg - Service
44	Dead+Wind 150 deg - Service
45	Dead+Wind 180 deg - Service
46	Dead+Wind 210 deg - Service
47	Dead+Wind 240 deg - Service
48	Dead+Wind 270 deg - Service
49	Dead+Wind 300 deg - Service
50	Dead+Wind 330 deg - Service

Maximum Member Forces

Section No.	Elevation ft	Component Type	Condition	Gov. Load Comb.	Axial K	Major Axis Moment kip-ft	Minor Axis Moment kip-ft
L1	195 - 142	Pole	Max Tension	1	0.000	0.000	0.000
			Max. Compression	26	-38.627	0.218	0.126

Section No.	Elevation ft	Component Type	Condition	Gov. Load Comb.	Axial K	Major Axis Moment kip-ft	Minor Axis Moment kip-ft
			Max. Mx	20	-9.307	711.476	0.951
			Max. My	2	-9.307	0.013	711.472
			Max. Vy	20	-24.056	711.476	0.951
			Max. Vx	2	-24.056	0.013	711.472
			Max. Torque	9			-9.240
L2	142 - 93.25	Pole	Max Tension	1	0.000	0.000	0.000
			Max. Compression	26	-51.851	0.500	0.289
			Max. Mx	20	-19.600	1949.287	0.430
			Max. My	2	-19.600	0.029	1949.275
			Max. Vy	20	-27.967	1949.287	0.430
			Max. Vx	2	-27.967	0.029	1949.275
			Max. Torque	9			-9.197
L3	93.25 - 45.75	Pole	Max Tension	1	0.000	0.000	0.000
			Max. Compression	26	-69.095	0.824	0.476
			Max. Mx	20	-33.422	3327.706	0.288
			Max. My	2	-33.422	0.049	3327.686
			Max. Vy	20	-31.457	3327.706	0.288
			Max. Vx	2	-31.457	0.049	3327.686
			Max. Torque	9			-9.076
L4	45.75 - 1	Pole	Max Tension	1	0.000	0.000	0.000
			Max. Compression	26	-92.930	1.143	0.660
			Max. Mx	20	-53.100	5027.845	0.327
			Max. My	2	-53.100	0.070	5027.816
			Max. Vy	20	-34.191	5027.845	0.327
			Max. Vx	2	-34.191	0.070	5027.816
			Max. Torque	9			-9.011

Maximum Reactions

Location	Condition	Gov. Load Comb.	Vertical K	Horizontal, X K	Horizontal, Z K
Pole	Max. Vert	36	92.930	5.152	0.000
	Max. H_x	20	53.135	34.136	-0.000
	Max. H_z	2	53.135	0.000	34.136
	Max. M_x	2	5027.816	0.000	34.136
	Max. M_z	8	5027.707	-34.136	-0.000
	Max. Torsion	21	8.993	34.136	-0.000
	Min. Vert	25	39.851	17.068	29.562
	Min. H_x	8	53.135	-34.136	-0.000
	Min. H_z	14	53.135	0.000	-34.136
	Min. M_x	14	-5027.736	0.000	-34.136
	Min. M_z	20	-5027.845	34.136	-0.000
	Min. Torsion	9	-8.993	-34.136	-0.000

Tower Mast Reaction Summary

Load Combination	Vertical K	$Shear_x$ K	$Shear_z$ K	Overturning Moment, M_x kip-ft	Overturning Moment, M_z kip-ft	Torque kip-ft
Dead Only	44.279	0.000	0.000	-0.032	0.055	0.000
1.2 Dead+1.0 Wind 0 deg - No Ice	53.135	0.000	-34.136	-5027.816	0.070	0.000

Load Combination	Vertical K	$Shear_x$ K	$Shear_z$ K	Overturning Moment, M_x kip-ft	Overturning Moment, M_z kip-ft	Torque kip-ft
0.9 Dead+1.0 Wind 0 deg - No Ice	39.851	0.000	-34.136	-4943.630	0.051	0.000
1.2 Dead+1.0 Wind 30 deg - No Ice	53.135	17.068	-29.562	-4354.082	-2514.071	-8.974
0.9 Dead+1.0 Wind 30 deg - No Ice	39.851	17.068	-29.562	-4281.210	-2471.928	-8.993
1.2 Dead+1.0 Wind 60 deg - No Ice	53.135	29.562	-17.068	-2513.931	-4354.117	-0.000
0.9 Dead+1.0 Wind 60 deg - No Ice	39.851	29.562	-17.068	-2471.830	-4281.233	-0.000
1.2 Dead+1.0 Wind 90 deg - No Ice	53.135	34.136	0.000	-0.329	-5027.707	8.974
0.9 Dead+1.0 Wind 90 deg - No Ice	39.851	34.136	0.000	-0.236	-4943.549	8.993
1.2 Dead+1.0 Wind 120 deg - No Ice	53.135	29.562	17.068	2513.851	-4354.117	0.000
0.9 Dead+1.0 Wind 120 deg - No Ice	39.851	29.562	17.068	2471.771	-4281.233	0.000
1.2 Dead+1.0 Wind 150 deg - No Ice	53.135	17.068	29.562	4354.291	-2513.571	-8.974
0.9 Dead+1.0 Wind 150 deg - No Ice	39.851	17.068	29.562	4281.358	-2471.570	-8.993
1.2 Dead+1.0 Wind 180 deg - No Ice	53.135	0.000	34.136	5027.736	0.070	-0.000
0.9 Dead+1.0 Wind 180 deg - No Ice	39.851	0.000	34.136	4943.571	0.051	-0.000
1.2 Dead+1.0 Wind 210 deg - No Ice	53.135	-17.068	29.562	4354.290	2513.710	8.974
0.9 Dead+1.0 Wind 210 deg - No Ice	39.851	-17.068	29.562	4281.358	2471.673	8.993
1.2 Dead+1.0 Wind 240 deg - No Ice	53.135	-29.562	17.068	2513.850	4354.256	-0.000
0.9 Dead+1.0 Wind 240 deg - No Ice	39.851	-29.562	17.068	2471.771	4281.335	-0.000
1.2 Dead+1.0 Wind 270 deg - No Ice	53.135	-34.136	0.000	-0.329	5027.845	-8.974
0.9 Dead+1.0 Wind 270 deg - No Ice	39.851	-34.136	0.000	-0.236	4943.651	-8.993
1.2 Dead+1.0 Wind 300 deg - No Ice	53.135	-29.562	-17.068	-2513.930	4354.255	0.000
0.9 Dead+1.0 Wind 300 deg - No Ice	39.851	-29.562	-17.068	-2471.830	4281.335	0.000
1.2 Dead+1.0 Wind 330 deg - No Ice	53.135	-17.068	-29.562	-4354.081	2514.210	8.974
0.9 Dead+1.0 Wind 330 deg - No Ice	39.851	-17.068	-29.562	-4281.210	2472.031	8.993
1.2 Dead+1.0 Ice+1.0 Temp	92.930	0.000	0.000	-0.660	1.143	0.000
1.2 Dead+1.0 Wind 0 deg+1.0 Ice+1.0 Temp	92.930	-0.000	-5.152	-865.886	1.393	0.000
1.2 Dead+1.0 Wind 30 deg+1.0 Ice+1.0 Temp	92.930	2.576	-4.462	-749.974	-431.173	-1.449
1.2 Dead+1.0 Wind 60 deg+1.0 Ice+1.0 Temp	92.930	4.462	-2.576	-433.346	-747.791	0.000
1.2 Dead+1.0 Wind 90 deg+1.0 Ice+1.0 Temp	92.930	5.152	-0.000	-0.832	-863.690	1.449
1.2 Dead+1.0 Wind 120 deg+1.0 Ice+1.0 Temp	92.930	4.462	2.576	431.738	-747.791	0.000
1.2 Dead+1.0 Wind 150 deg+1.0 Ice+1.0 Temp	92.930	2.576	4.462	748.394	-431.124	-1.449
1.2 Dead+1.0 Wind 180 deg+1.0 Ice+1.0 Temp	92.930	-0.000	5.152	864.279	1.393	-0.000

Load Combination	Vertical K	$Shear_x$ K	$Shear_z$ K	Overturning Moment, M_x kip-ft	Overturning Moment, M_z kip-ft	Torque kip-ft
1.2 Dead+1.0 Wind 210 deg+1.0 Ice+1.0 Temp	92.930	-2.576	4.462	748.393	433.910	1.449
1.2 Dead+1.0 Wind 240 deg+1.0 Ice+1.0 Temp	92.930	-4.462	2.576	431.737	750.576	-0.000
1.2 Dead+1.0 Wind 270 deg+1.0 Ice+1.0 Temp	92.930	-5.152	-0.000	-0.833	866.475	-1.449
1.2 Dead+1.0 Wind 300 deg+1.0 Ice+1.0 Temp	92.930	-4.462	-2.576	-433.345	750.576	0.000
1.2 Dead+1.0 Wind 330 deg+1.0 Ice+1.0 Temp	92.930	-2.576	-4.462	-749.973	433.959	1.449
Dead+Wind 0 deg - Service	44.279	0.000	-9.973	-1459.853	0.058	0.000
Dead+Wind 30 deg - Service	44.279	4.986	-8.637	-1264.282	-729.880	-2.742
Dead+Wind 60 deg - Service	44.279	8.637	-4.986	-729.954	-1264.201	-0.000
Dead+Wind 90 deg - Service	44.279	9.973	0.000	-0.054	-1459.783	2.742
Dead+Wind 120 deg - Service	44.279	8.637	4.986	729.887	-1264.201	0.000
Dead+Wind 150 deg - Service	44.279	4.986	8.637	1264.236	-729.844	-2.742
Dead+Wind 180 deg - Service	44.279	0.000	9.973	1459.786	0.058	-0.000
Dead+Wind 210 deg - Service	44.279	-4.986	8.637	1264.236	729.960	2.742
Dead+Wind 240 deg - Service	44.279	-8.637	4.986	729.887	1264.317	-0.000
Dead+Wind 270 deg - Service	44.279	-9.973	0.000	-0.054	1459.898	-2.742
Dead+Wind 300 deg - Service	44.279	-8.637	-4.986	-729.954	1264.317	0.000
Dead+Wind 330 deg - Service	44.279	-4.986	-8.637	-1264.282	729.996	2.742

Solution Summary

	Sum of Applied Forces			Sum of Reactions			
Load Comb.	PX K	PY K	PZ K	PX K	PY K	PZ K	% Error
1	0.000	-44.279	0.000	0.000	44.279	0.000	0.000%
2	0.000	-53.135	-34.136	0.000	53.135	34.136	0.000%
3	0.000	-39.851	-34.136	0.000	39.851	34.136	0.000%
4	17.068	-53.135	-29.562	-17.068	53.135	29.562	0.000%
5	17.068	-39.851	-29.562	-17.068	39.851	29.562	0.000%
6	29.562	-53.135	-17.068	-29.562	53.135	17.068	0.000%
7	29.562	-39.851	-17.068	-29.562	39.851	17.068	0.000%
8	34.136	-53.135	0.000	-34.136	53.135	-0.000	0.000%
9	34.136	-39.851	0.000	-34.136	39.851	-0.000	0.000%
10	29.562	-53.135	17.068	-29.562	53.135	-17.068	0.000%
11	29.562	-39.851	17.068	-29.562	39.851	-17.068	0.000%
12	17.068	-53.135	29.562	-17.068	53.135	-29.562	0.000%
13	17.068	-39.851	29.562	-17.068	39.851	-29.562	0.000%
14	0.000	-53.135	34.136	0.000	53.135	-34.136	0.000%
15	0.000	-39.851	34.136	0.000	39.851	-34.136	0.000%
16	-17.068	-53.135	29.562	17.068	53.135	-29.562	0.000%
17	-17.068	-39.851	29.562	17.068	39.851	-29.562	0.000%
18	-29.562	-53.135	17.068	29.562	53.135	-17.068	0.000%
19	-29.562	-39.851	17.068	29.562	39.851	-17.068	0.000%
20	-34.136	-53.135	0.000	34.136	53.135	-0.000	0.000%
21	-34.136	-39.851	0.000	34.136	39.851	-0.000	0.000%
22	-29.562	-53.135	-17.068	29.562	53.135	17.068	0.000%
23	-29.562	-39.851	-17.068	29.562	39.851	17.068	0.000%
24	-17.068	-53.135	-29.562	17.068	53.135	29.562	0.000%
25	-17.068	-39.851	-29.562	17.068	39.851	29.562	0.000%
26	0.000	-92.930	0.000	0.000	92.930	0.000	0.000%
27	0.000	-92.930	-5.152	0.000	92.930	5.152	0.000%
28	2.576	-92.930	-4.462	-2.576	92.930	4.462	0.000%
29	4.462	-92.930	-2.576	-4.462	92.930	2.576	0.000%
30	5.152	-92.930	0.000	-5.152	92.930	0.000	0.000%

Load Comb.	Sum of Applied Forces PX K	PY K	PZ K	Sum of Reactions PX K	PY K	PZ K	% Error
31	4.462	-92.930	2.576	-4.462	92.930	-2.576	0.000%
32	2.576	-92.930	4.462	-2.576	92.930	-4.462	0.000%
33	0.000	-92.930	5.152	0.000	92.930	-5.152	0.000%
34	-2.576	-92.930	4.462	2.576	92.930	-4.462	0.000%
35	-4.462	-92.930	2.576	4.462	92.930	-2.576	0.000%
36	-5.152	-92.930	0.000	5.152	92.930	0.000	0.000%
37	-4.462	-92.930	-2.576	4.462	92.930	2.576	0.000%
38	-2.576	-92.930	-4.462	2.576	92.930	4.462	0.000%
39	0.000	-44.279	-9.973	0.000	44.279	9.973	0.000%
40	4.986	-44.279	-8.637	-4.986	44.279	8.637	0.000%
41	8.637	-44.279	-4.986	-8.637	44.279	4.986	0.000%
42	9.973	-44.279	0.000	-9.973	44.279	-0.000	0.000%
43	8.637	-44.279	4.986	-8.637	44.279	-4.986	0.000%
44	4.986	-44.279	8.637	-4.986	44.279	-8.637	0.000%
45	0.000	-44.279	9.973	0.000	44.279	-9.973	0.000%
46	-4.986	-44.279	8.637	4.986	44.279	-8.637	0.000%
47	-8.637	-44.279	4.986	8.637	44.279	-4.986	0.000%
48	-9.973	-44.279	0.000	9.973	44.279	-0.000	0.000%
49	-8.637	-44.279	-4.986	8.637	44.279	4.986	0.000%
50	-4.986	-44.279	-8.637	4.986	44.279	8.637	0.000%

Non-Linear Convergence Results

Load Combination	Converged?	Number of Cycles	Displacement Tolerance	Force Tolerance
1	Yes	4	0.00000001	0.00000001
2	Yes	5	0.00000001	0.00002183
3	Yes	5	0.00000001	0.00000849
4	Yes	6	0.00000001	0.00039946
5	Yes	6	0.00000001	0.00009704
6	Yes	6	0.00000001	0.00043675
7	Yes	6	0.00000001	0.00010974
8	Yes	5	0.00000001	0.00082819
9	Yes	5	0.00000001	0.00033775
10	Yes	6	0.00000001	0.00043675
11	Yes	6	0.00000001	0.00010974
12	Yes	6	0.00000001	0.00048079
13	Yes	6	0.00000001	0.00012428
14	Yes	5	0.00000001	0.00002183
15	Yes	5	0.00000001	0.00000849
16	Yes	6	0.00000001	0.00048079
17	Yes	6	0.00000001	0.00012428
18	Yes	6	0.00000001	0.00043675
19	Yes	6	0.00000001	0.00010974
20	Yes	5	0.00000001	0.00082818
21	Yes	5	0.00000001	0.00033775
22	Yes	6	0.00000001	0.00043676
23	Yes	6	0.00000001	0.00010974
24	Yes	6	0.00000001	0.00039947
25	Yes	6	0.00000001	0.00009704
26	Yes	4	0.00000001	0.00000001
27	Yes	6	0.00008529	0.00033169
28	Yes	6	0.00008488	0.00046910
29	Yes	6	0.00008488	0.00047905
30	Yes	6	0.00008529	0.00034144
31	Yes	6	0.00008488	0.00047771

32	Yes	6	0.00008488	0.00050193
33	Yes	6	0.00008529	0.00033101
34	Yes	6	0.00008488	0.00050416
35	Yes	6	0.00008488	0.00047969
36	Yes	6	0.00008529	0.00034266
37	Yes	6	0.00008488	0.00048103
38	Yes	6	0.00008487	0.00047151
39	Yes	4	0.00000001	0.00041915
40	Yes	5	0.00000001	0.00029634
41	Yes	5	0.00000001	0.00033424
42	Yes	5	0.00000001	0.00010966
43	Yes	5	0.00000001	0.00033420
44	Yes	5	0.00000001	0.00040153
45	Yes	4	0.00000001	0.00041911
46	Yes	5	0.00000001	0.00040159
47	Yes	5	0.00000001	0.00033426
48	Yes	5	0.00000001	0.00010967
49	Yes	5	0.00000001	0.00033430
50	Yes	5	0.00000001	0.00029642

Maximum Tower Deflections - Service Wind

Section No.	Elevation ft	Horz. Deflection in	Gov. Load Comb.	Tilt °	Twist °
L1	195 - 142	70.472	48	3.317	0.036
L2	146.25 - 93.25	38.445	48	2.743	0.017
L3	98.75 - 45.75	16.204	48	1.663	0.006
L4	52.5 - 1	4.273	48	0.769	0.002

Critical Deflections and Radius of Curvature - Service Wind

Elevation ft	Appurtenance	Gov. Load Comb.	Deflection in	Tilt °	Twist °	Radius of Curvature ft
197.000	4' Lightning Rod	48	70.472	3.317	0.036	24579
190.000	Sector1(CaAa=14000 Sq.in)No Ice	48	66.995	3.274	0.034	24579
175.000	Sector1(CaAa=10000 Sq.in)No Ice	48	56.686	3.134	0.028	6143
160.000	Sector1(CaAa=10000 Sq.in)No Ice	48	46.819	2.959	0.022	3508

Maximum Tower Deflections - Design Wind

Section No.	Elevation ft	Horz. Deflection in	Gov. Load Comb.	Tilt °	Twist °
L1	195 - 142	241.636	20	11.400	0.120
L2	146.25 - 93.25	132.131	20	9.438	0.056
L3	98.75 - 45.75	55.790	20	5.730	0.021
L4	52.5 - 1	14.722	20	2.649	0.007

Critical Deflections and Radius of Curvature - Design Wind

Elevation ft	Appurtenance	Gov. Load Comb.	Deflection in	Tilt °	Twist °	Radius of Curvature ft
197.000	4' Lightning Rod	20	241.636	11.400	0.120	7671
190.000	Sector1(CaAa=14000 Sq.in)No Ice	20	229.755	11.252	0.113	7671
175.000	Sector1(CaAa=10000 Sq.in)No Ice	20	194.528	10.775	0.092	1912
160.000	Sector1(CaAa=10000 Sq.in)No Ice	20	160.791	10.175	0.072	1086

Base Plate Design Data

Plate Thickness in	Number of Anchor Bolts	Anchor Bolt Size in	Actual / Allowable / Ratio Bolt Tension K	Actual / Allowable / Ratio Bolt Compression K	Actual / Allowable / Ratio Plate Stress ksi	Actual / Allowable / Ratio Stiffener Stress ksi	Controlling Condition	Ratio
2.750	20	2.250	191.972 243.576 0.79	197.282 404.336 0.49	42.376 45.000 0.94		Plate	0.94 ✔

Compression Checks

Pole Design Data

Section No.	Elevation ft	Size	L ft	L_u ft	Kl/r	A in^2	P_u K	ϕP_n K	Ratio $\frac{P_u}{\phi P_n}$
L1	195 - 142 (1)	TP30.07x20x0.25	53.000	0.000	0.0	23.021	-9.307	1346.750	0.007
L2	142 - 93.25 (2)	TP38.833x28.763x0.313	53.000	0.000	0.0	37.171	-19.600	2174.480	0.009
L3	93.25 - 45.75 (3)	TP47.233x37.163x0.375	53.000	0.000	0.0	54.246	-33.422	3173.370	0.011
L4	45.75 - 1 (4)	TP54.985x45.2x0.438	51.500	0.000	0.0	75.746	-53.100	4431.140	0.012

Pole Bending Design Data

Section No.	Elevation ft	Size	M_{ux} kip-ft	ϕM_{nx} kip-ft	Ratio $\frac{M_{ux}}{\phi M_{nx}}$	M_{uy} kip-ft	ϕM_{ny} kip-ft	Ratio $\frac{M_{uy}}{\phi M_{ny}}$
L1	195 - 142 (1)	TP30.07x20x0.25	711.478	965.967	0.737	0.000	965.967	0.000
L2	142 - 93.25 (2)	TP38.833x28.763x0.313	1949.292	1994.500	0.977	0.000	1994.500	0.000
L3	93.25 - 45.75 (3)	TP47.233x37.163x0.375	3327.708	3524.967	0.944	0.000	3524.967	0.000
L4	45.75 - 1 (4)	TP54.985x45.2x0.438	5027.850	5842.541	0.861	0.000	5842.541	0.000

Pole Shear Design Data

Section No.	Elevation ft	Size	Actual V_u K	ϕV_n K	Ratio $\frac{V_u}{\phi V_n}$	Actual T_u kip-ft	ϕT_n kip-ft	Ratio $\frac{T_u}{\phi T_n}$
L1	195 - 142 (1)	TP30.07x20x0.25	24.057	404.026	0.060	9.200	1026.533	0.009
L2	142 - 93.25 (2)	TP38.833x28.763x0.313	27.967	652.343	0.043	9.072	2140.908	0.004
L3	93.25 - 45.75 (3)	TP47.233x37.163x0.375	31.457	952.011	0.033	8.998	3799.692	0.002
L4	45.75 - 1 (4)	TP54.985x45.2x0.438	34.191	1329.340	0.026	8.974	6350.267	0.001

Pole Interaction Design Data

Section No.	Elevation ft	Ratio $\frac{P_u}{\phi P_n}$	Ratio $\frac{M_{ux}}{\phi M_{nx}}$	Ratio $\frac{M_{uy}}{\phi M_{ny}}$	Ratio $\frac{V_u}{\phi V_n}$	Ratio $\frac{T_u}{\phi T_n}$	Comb. Stress Ratio	Allow. Stress Ratio	Criteria
L1	195 - 142 (1)	0.007	0.737	0.000	0.060	0.009	0.748 ✔	1.000	✔
L2	142 - 93.25 (2)	0.009	0.977	0.000	0.043	0.004	0.989 ✔	1.000	✔
L3	93.25 - 45.75 (3)	0.011	0.944	0.000	0.033	0.002	0.956 ✔	1.000	✔
L4	45.75 - 1 (4)	0.012	0.861	0.000	0.026	0.001	0.873 ✔	1.000	✔

Section Capacity Table

Section No.	Elevation ft	Component Type	Size	Critical Element	P K	ϕP_{allow} K	% Capacity	Pass Fail
L1	195 - 142	Pole	TP30.07x20x0.25	1	-9.307	1346.750	74.8	Pass
L2	142 - 93.25	Pole	TP38.833x28.763x0.313	2	-19.600	2174.480	98.9	Pass
L3	93.25 - 45.75	Pole	TP47.233x37.163x0.375	3	-33.422	3173.370	95.6	Pass
L4	45.75 - 1	Pole	TP54.985x45.2x0.438	4	-53.100	4431.140	87.3	Pass
							Summary	
						Pole (L2)	98.9	Pass
						Base Plate	94.2	Pass
						RATING =	**98.9**	**Pass**

DIMENSIONING SCHEDULE	
A	25' 6"
B	12' 9"
C	0' 6"
D	6' 0"
E	2' 6"
DIAMETER	7' 0"
MIN. OVERLAP "M"	2' 3"
AR PROJECTION	REF TO MFG

REINFORCING SCHEDULE	SIZE	TOTAL QTY
VERTICAL BARS WITH 90° BEND	# 9	33
HORIZONTAL TIES	# 4	14
HORIZONTAL U-BAR (PEDESTAL)	# 4	6
TOP HORIZONTAL BARS	# 8	66
BOTTOM HORIZONTAL BARS	# 8	66
CORNER BARS	# 4	8
VERTICAL U-BARS (PAD)	# 4	132

BASE REACTIONS		
(FACTORED LOADS)		
MOMENT	5028	KIP-FT
AXIAL	53	KIPS
SHEAR	34	KIPS

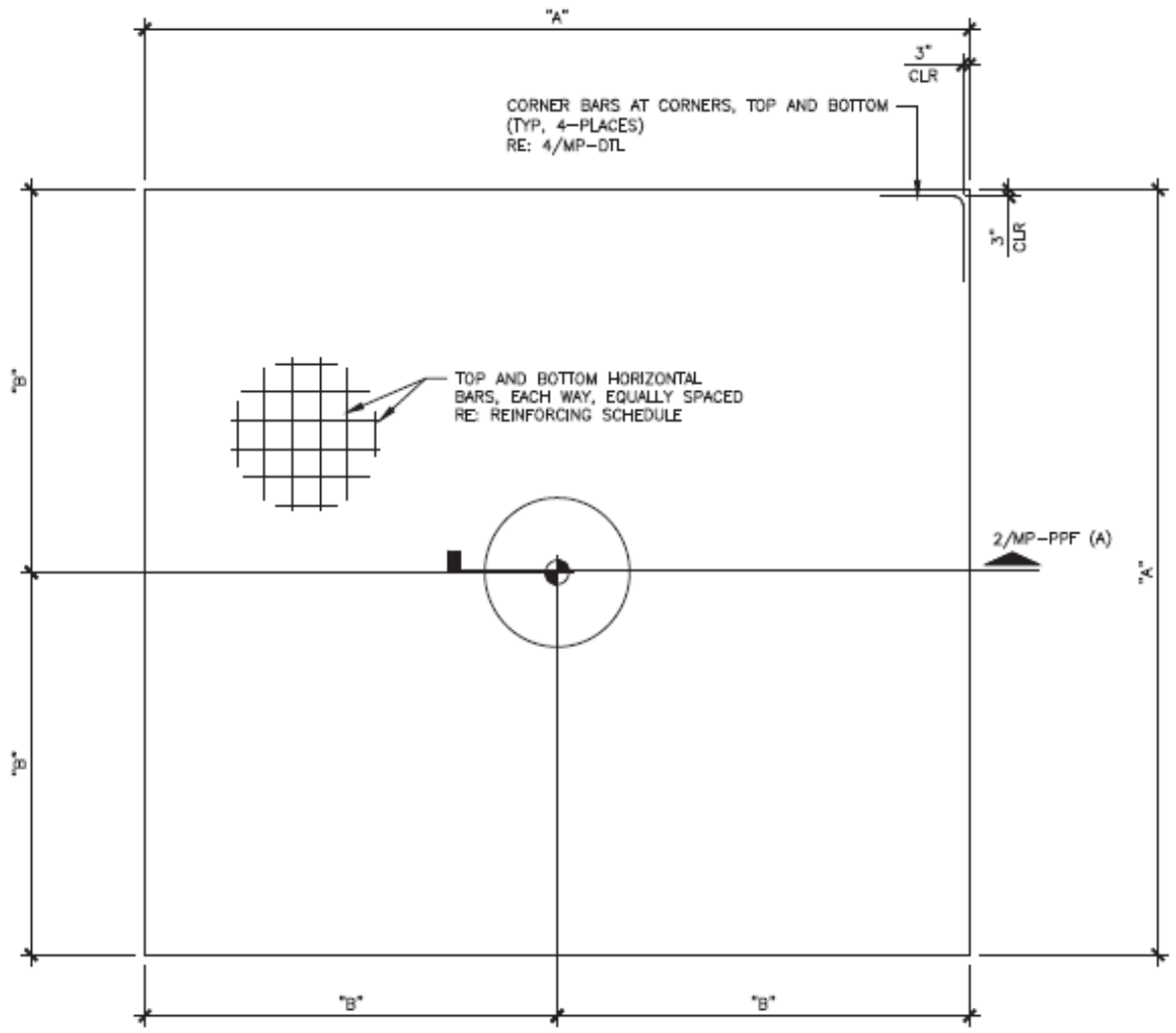

1 PLAN
SCALE: N.T.S.

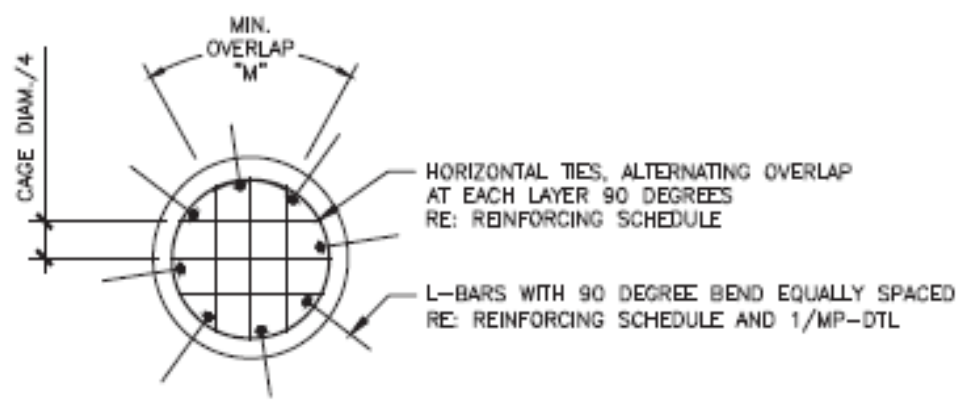

3 SECTION
SCALE: N.T.S.

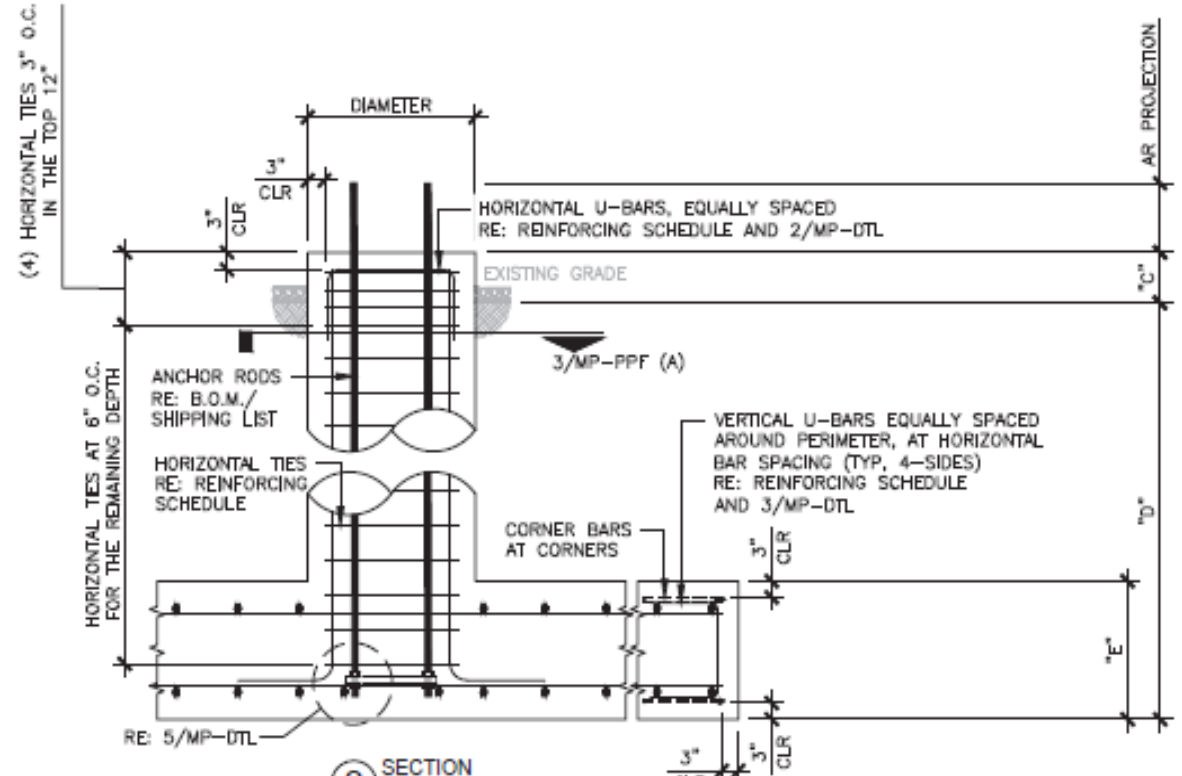

2 SECTION
SCALE: N.T.S.

NOTES:

1. REINFORCEMENT STEEL SHALL CONFORM TO THE REQUIREMENT OF ASTM A-615 (GRADE 60) EXCEPT THAT TIES MAY BE ASTM-615 (GRADE 4 WITH 3" MINIMUM CLEAR COVER.
2. REINFORCEMENT STEEL SHALL BE DETAILED, FABRICATED, BENT, AND PLACED IN ACCORDANCE WITH THE CRSI MANUAL OF STANDARD PRACTICE AND THE ACI 315 (LATEST EDITION).
3. THE CONTRACTOR SHALL THOROUGHLY REVIEW THE GEOTECH REPORT FOR THIS PROJECT AND FOLLOW THE RECOMMENDATIONS IN THAT REPORT WHEN CONSTRUCTING THE FOUNDATION.
   GEOTECHNICAL PROPERTIES BY: ENGINEERED TOWER SOLUTIONS
   PROJECT NUMBER: 25141630
   DATE: DECEMBER 2, 2025
4. THIS FOUNDATION HAS BEEN DESIGNED, IN ACCORDANCE WITH THE TIA 222-H STANDARD, SPECIFICALLY FOR THE TOWER AND SOIL CONDITION REFERENCED ABOVE. IF ANYTHING DIFFERS THIS DESIGN SHALL BE CONSIDERED INVALID AND MUST BE REDESIGNED PRIOR TO CONSTRUCTION.
5. CONCRETE VOLUME IN CUBIC YARDS: 65.91
6. ALL CONCRETE SHALL HAVE A MINIMUM COMPRESSIVE STRENGTH OF 4000 PSI AT 28 DAYS.
7. CONCRETE MIXTURES SHALL MEET DURABILITY REQUIREMENTS OF CHAPTER 19 OF THE ACI 318-14.
8. ALL CONCRETE TESTING SHALL BE IN ACCORDANCE WITH ACI 318-14. A MINIMUM OF (2) 6"X12" OR (3) 4"X8" CONCRETE CYLINDERS PER INDIVIDUAL FOUNDATION AND A MINIMUM OF (6) 6"X12" OR (6) 4"X8" CYLINDERS PER BATCH REQUIRED.
9. SLUMP TEST SHALL BE MADE IN ACCORDANCE WITH ASTM C143. THE ALLOWABLE CONCRETE SLUMP SHALL BE 4 INCHES (±1") UNLESS ADMIXTURES ARE USED. ADMIXTURE SHALL BE IN ACCORDANCE WITH ASTM C494 STANDARD TYPES A, B, C, D OR E. THE ENGINEER SHALL PRE-APPROVE SUPER PLASTICIZER USE. DO NOT USE CHLORIDE-CONTAINING ADMIXTURES. AIR ENTRAINING ADMIXTURES SHALL CONFORM T ASTM C260.
10. BACKFILL MATERIAL SHALL BE COMPACTED TO A MIN. UNIT WEIGHT OF 110 PCF OR AS SPECIFIED IN GEOTECH REPORT. THE SOIL SHALL BE INSTALLED IN 6" TO 8" LIFTS AND COMPACTED THOROUGHLY TO ACHIEVE APPROPRIATE UNIT WEIGHT UNLESS GEOTECH SPECIFIES OTHER COMPACTION REQUIREMENTS.
11. VERIFY ALL DIMENSIONS AGAINST MANUFACTURER'S DRAWINGS.

STIPULATION FOR REUSE:

1. THIS DRAWING WAS SPECIFICALLY DESIGNED FOR USE BY THE CUSTOMER ON THIS DRAWING AT THE SPECIFIED LOCATION. USE OF THIS DRAWING FOR REFERENCE OR EXAMPLE ON ANOTHER PROJECT REQUIRES THE SERVICES OF A PROPERLY LICENSED ENGINEER.

B+T GRP
1717 S BOULDER AVE #300, TULSA, OK 74119
(918) 587-4630

APC Towers
8601 SIX FORKS RD., STE. 250, RALEIGH, NC

ISSUED FOR:

REV	DATE	DESCRIPTION
0	01/28/26	ISSUED FOR CONSTRUCTION

COA: 4011

EXPIRES: 12/31/2026

STATE OF KENTUCKY
BRAD R. MILANOWSKI
25311
LICENSED PROFESSIONAL ENGINEER
1/28/26

PROJECT INFORMATION:

PROJECT NO: 26-000573
SITE NAME: LV NANCY DT
SITE NO: KY-4055
CLIENT NAME: APC TOWERS IV, LLC

DRAWN BY: CLINT COODY
CHECKED BY: JL

SHEET TITLE:

PAD & PIER FOUNDATION FOR 195 FT. MONOPOLE TOWER

SHEET NUMBER: MP-PPF

REVISION: 0

DIMENSIONING SCHEDULE	
AA*	5' 10"
BB	1' 6"
CC*	VARIES
DD*	2' 0"
EE	3' 0"

*NOTE: CONTRACTOR TO VERIFY DIMENSIONS PRIOR TO FABRICATION

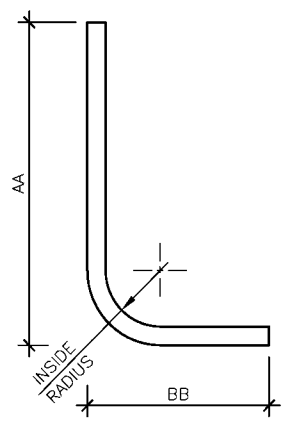

1 L-BAR
SCALE: N.T.S.

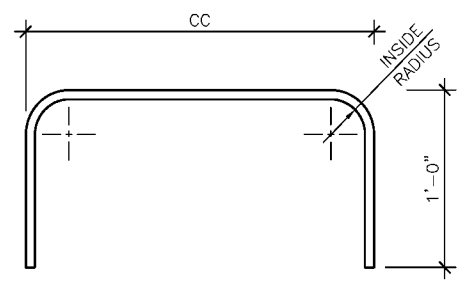

2 HORIZONTAL U-BAR
SCALE: N.T.S.

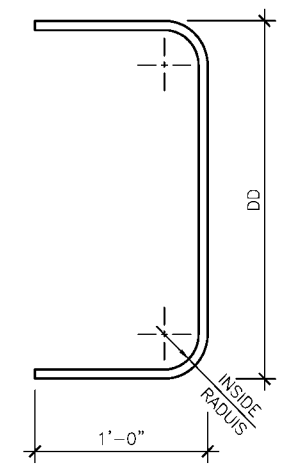

3 VERTICAL U-BAR
SCALE: N.T.S.

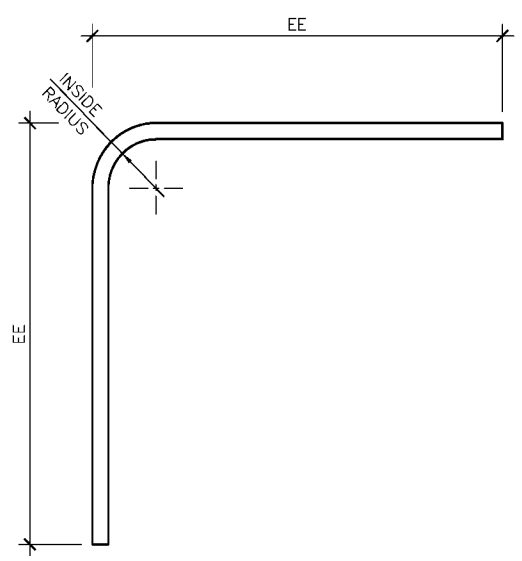

4 CORNER BAR
SCALE: N.T.S.

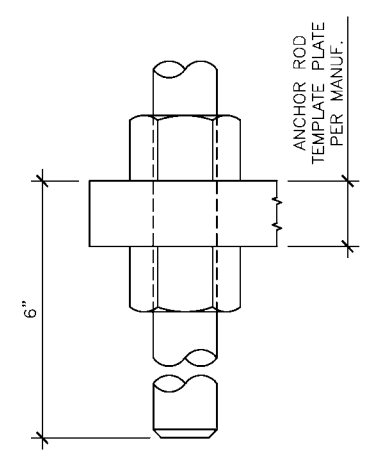

5 ANCHOR ROD DETAIL
SCALE: N.T.S.

B+T GRP
1717 S BOULDER AVE #300, TULSA, OK 74119
(918) 587-4630

APC Towers
8601 SIX FORKS RD., STE. 250, RALEIGH, NC

ISSUED FOR:

REV	DATE	DESCRIPTION
0	01/28/26	ISSUED FOR CONSTRUCTION

COA: 4011

EXPIRES: 12/31/2026

STATE OF KENTUCKY
BRAD R. MILANOWSKI
25311
LICENSED PROFESSIONAL ENGINEER
1/28/26

PROJECT INFORMATION:

PROJECT NO: 26-000573
SITE NAME: LV NANCY DT
SITE NO: KY-4055
CLIENT NAME: APC TOWERS IV, LLC

DRAWN BY: CLINT COODY
CHECKED BY: JL

SHEET TITLE:

DIMENSIONING DETAIL

SHEET NUMBER: MP-DTL

REVISION: 0

Pier and Pad Foundation

Project #:	26-000573
Site Name:	LV Nancy DT
Site #:	KY-4055

TIA-222 Revision:	H
Tower Type:	Monopole

Top & Bot. Pad Rein. Different?:	☐
Block Foundation?:	☐
Rectangular Pad?:	☐

Superstructure Analysis Reactions		
Compression, P_{comp}:	53	kips
Base Shear, Vu_comp:	34	kips
Moment, M_u:	5028	ft-kips
Tower Height, **H**:	195	ft
BP Dist. Above Fdn, bp_{dist}:	3	in

Foundation Analysis Checks				
	Capacity	**Demand**	**Rating**	**Check**
Lateral (Sliding) (kips)	209.29	34.00	**16.2%**	**Pass**
Bearing Pressure (ksf)	6.87	5.82	**84.7%**	**Pass**
*Overturning (kip*ft)*	5576.60	5257.50	**94.3%**	**Pass**
*Pier Flexure (Comp.) (kip*ft)*	5407.90	5164.00	**95.5%**	**Pass**
Pier Compression (kip)	24494.62	80.71	**0.3%**	**Pass**
*Pad Flexure (kip*ft)*	2903.34	2789.42	**96.1%**	**Pass**
Pad Shear - 1-way (kips)	740.26	367.69	**49.7%**	**Pass**
Pad Shear - 2-way (Comp) (ksi)	0.190	0.000	**0.0%**	**Pass**
*Flexural 2-way (Comp) (kip*ft)*	3277.50	3098.40	**94.5%**	**Pass**

Structural Rating:	**96.1%**
Soil Rating:	**94.3%**

Pier Properties		
Pier Shape:	Circular	
Pier Diameter, **dpier**:	7	ft
Ext. Above Grade, **E**:	0.5	ft
Pier Rebar Size, **Sc**:	9	
Pier Rebar Quantity, **mc**:	33	
Pier Tie/Spiral Size, **St**:	4	
Pier Tie/Spiral Quantity, **mt**:	14	
Pier Reinforcement Type:	Tie	
Pier Clear Cover, cc_{pier}:	3	in

Pad Properties		
Depth, **D**:	6	ft
Pad Width, W_1:	25.5	ft
Pad Thickness, **T**:	2.5	ft
Pad Rebar Size (Bottom dir. 2), Sp_2:	8	
Pad Rebar Quantity (Bottom dir. 2), mp_2:	33	
Pad Clear Cover, cc_{pad}:	3	in

Material Properties		
Rebar Grade, **Fy**:	60	ksi
Concrete Compressive Strength, **F'c**:	4	ksi
Dry Concrete Density, δ**c**:	150	pcf

Soil Properties		
Total Soil Unit Weight, γ:	110	pcf
Ultimate Net Bearing, Qnet:	8.500	ksf
Cohesion, **Cu**:	0.000	ksf
Friction Angle, φ:	30	degrees
SPT Blow Count, N_{blows}:	13	
Base Friction, μ:	0.35	
Neglected Depth, **N**:	2.50	ft
Foundation Bearing on Rock?	Yes	
Groundwater Depth, **gw**:	N/a	ft

<--Toggle between Gross and Net

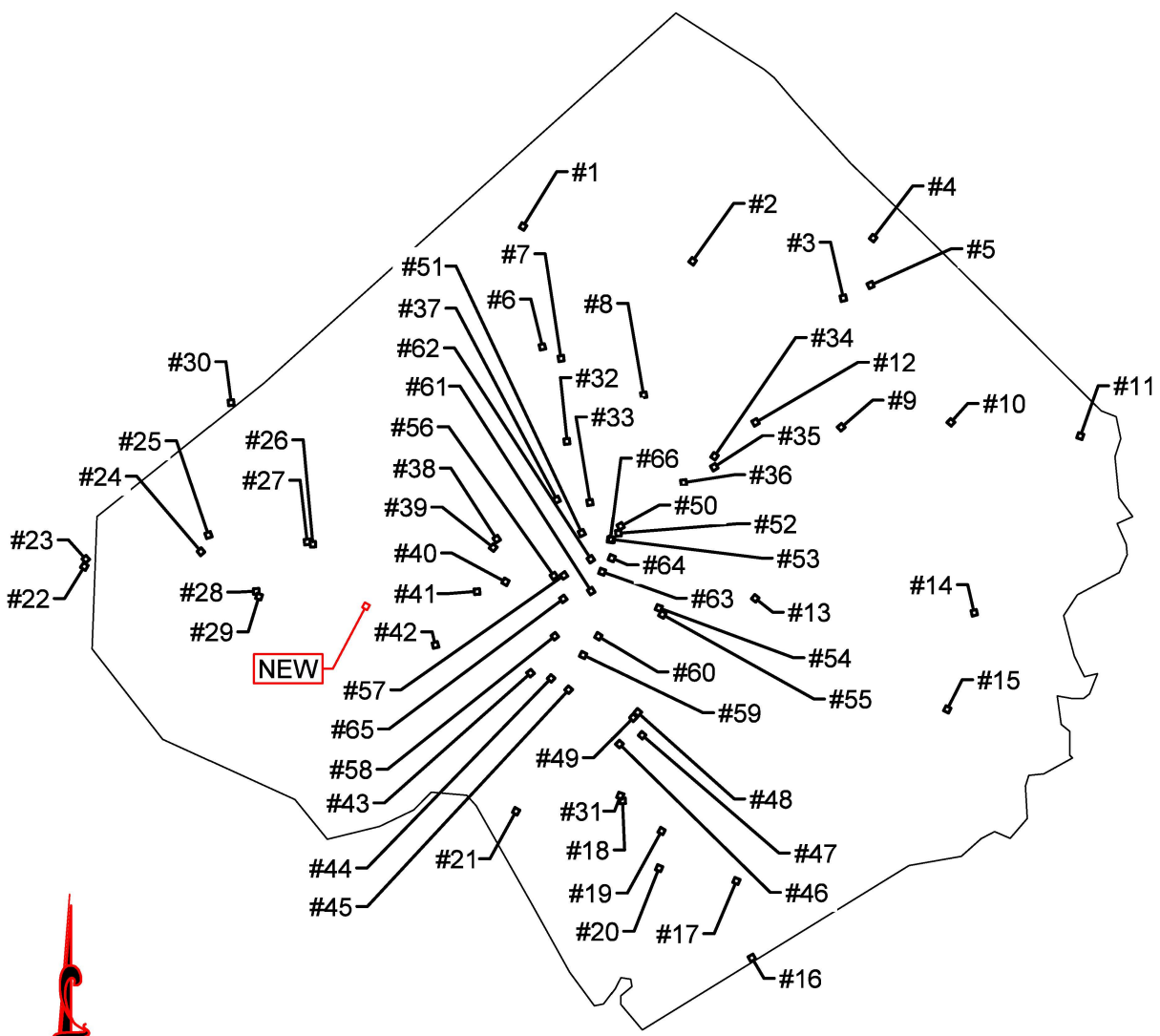

PULASKI COUNTY

FCC REGISTERED TOWERS

TOWER	TOWER OWNER	ASR	LATITUDE	LONGITUDE
NEW	APC TOWERS	TBD	37° 4' 24.78"N	84° 44' 30.23"W
1	CELLCO PARTNERSHIP	1250182	37°15'4.90"N	84°38'58.40"W
2	TOWERCO V HOLDINGS LLC	1328459	37°14'4.60"N	84°32'50.40"W
3	CELLCO PARTNERSHIP	1250183	37°13'3.80"N	84°27'29.00"W
4	AMERICAN TOWERS LLC	1018905	37°14'47.90"N	84°26'28.50"W
5	HEMPHILL CORPORATION	1232562	37°13'27.20"N	84°26'25.30"W
6	GLOBAL TOWER, LLC. THROUGH AMERICAN TOWERS, LLC	1229869	37°11'39.70"N	84°38'18.20"W
7	EAST KENTUCKY POWER COOPERATIVE, INC	1237226	37°11'19.30"N	84°37'36.30"W
8	CELLCO PARTNERSHIP	1272282	37°10'16.60"N	84°34'38.90"W
9	VERTICAL BRIDGE CC FM, LLC	1043675	37° 9'16.00"N	84°27'35.00"W
10	AMERICAN TOWERS LLC	1230266	37° 9'26.40"N	84°23'34.20"W
11	AMERICAN TOWERS LLC	1229865	37° 9'7.60"N	84°18'58.80"W
12	SBA TOWERS IX, LLC	1312272	37° 9'22.70"N	84°30'42.70"W
13	CELLCO PARTNERSHIP	1263386	37° 4'25.90"N	84°30'38.10"W
14	SOUTH KENTUCKY RURAL ELECTRIC COOPERATIVE CORPORATION	1043456	37° 4'3.50"N	84°22'37.10"W
15	KENTUCKY, COMMONWEALTH OF DBA = KY EMERGENCY WARNING SYSTEM KEWS	1044797	37° 1'13.40"N	84°23'42.60"W
16	SBA TOWERS III LLC	1260689	36°53'59.90"N	84°30'50.00"W
17	SBA TOWERS III LLC	1260939	36°56'10.20"N	84°31'25.20"W
18	SBA TOWERS III LLC	1260942	36°58'40.00"N	84°35'24.90"W
19	VERTICAL BRIDGE CC FM, LLC	1043677	36°57'38.00"N	84°34'7.00"W

PREPARED FOR:

APC Towers

8601 SIX FORKS RD
RALEIGH, NORTH CAROLINA 27615

PREPARED BY:

TeleCAD Wireless

1961 NORTHPOINT BLVD, SUITE 130
HIXSON, TN 37343
PH: 423-843-9500
FAX: 423-843-9509

DRAWN BY:	MDR
CHECKED BY:	DS

REVISIONS

NO.	DATE	BY	DESCRIPTION
1	01/21/26	JAE	ZONING ISSUE
0	11/06/25	JAE	ZONING ISSUE
A	10/14/25	MDR	PRELIMINARY REVIEW

ENGINEER'S STAMP:

STATE OF KENTUCKY
STEPHEN P. HUNT
25003
LICENSED PROFESSIONAL ENGINEER

NOT VALID WITHOUT P.E. STAMP & SIGNATURE

SITE NAME:
LV NANCY DT

ADDRESS:
376 LANETOWN ROAD
NANCY, KY 42544

COUNTY:
PULASKI

LATITUDE:
37° 4' 24.78" N

LONGITUDE:
84° 44' 30.23" W

SITE NUMBER:
KY-4055

SHEET TITLE:
OVERALL SITE PLAN

DRAWING NO.	REVISION:
ASR-1	1

FCC REGISTERED TOWERS

TOWER	TOWER OWNER	ASR	LATITUDE	LONGITUDE
20	SBA INFRASTRUCTURES, LLC	1232715	36°56'43.90"N	84°34'4.50"W
21	CELLULAR PHONE OF KENTUCKY, INC. DBA = RAMCELL	1043628	36°58'25.50"N	84°39'8.80"W
22	SBA INFRASTRUCTURES, LLC	1232264	37° 5'19.70"N	84°54'47.30"W
23	UNITI TOWERS LLC	1318405	37° 5'25.30"N	84°54'43.80"W
24	CELLCO PARTNERSHIP	1250184	37° 5'46.40"N	84°50'33.90"W
25	AMERICAN TOWERS LLC	1289960	37° 6'13.80"N	84°50'17.60"W
26	SBA INFRASTRUCTURES, LLC	1247464	37° 6'3.70"N	84°46'43.50"W
27	UNITI TOWERS LLC	1316046	37° 6'0.80"N	84°46'36.40"W
28	AMERICAN TOWERS LLC	1203424	37° 4'42.30"N	84°48'36.80"W
29	K-LOVE, INC.	1250130	37° 4'36.30"N	84°48'38.80"W
30	KENTUCKY AUTHORITY FOR EDUCATIONAL TELEVISION DBA WKSO TV	1044043	37°10'3.00"N	84°49'30.00"W
31	CELLCO PARTNERSHIP	1251434	36°58'40.40"N	84°35'27.50"W
32	CELLCO PARTNERSHIP	1253989	37° 8'48.90"N	84°37'25.10"W
33	VB-S1 ASSETS, LLC	1043674	37° 7'3.00"N	84°36'42.00"W
34	AMERICAN TOWERS LLC	1279127	37° 8'25.10"N	84°32'6.10"W
35	AMERICAN TOWERS LLC	1042206	37° 8'16.00"N	84°32'7.90"W
36	SOMERSET EDUCATIONAL BROADCASTING FOUNDATION	1051877	37° 7'52.00"N	84°33'15.00"W
37	VB BTS, LL, LLC	1321398	37° 7'5.70"N	84°37'53.70"W
38	SBA INFRASTRUCTURE, LLC	1231891	37° 5'59.90"N	84°39'58.90"W

FCC REGISTERED TOWERS

TOWER	TOWER OWNER	ASR	LATITUDE	LONGITUDE
39	UNITI TOWERS LLC	1316998	37° 5'58.30"N	84°40'2.50"W
40	F.T.G. BROADCASTING, INC.	1264631	37° 4'50.60"N	84°39'38.50"W
41	VERTICAL BRIDGE CC FM, LLC	1043118	37° 4'38.90"N	84°40'37.20"W
42	CELLCO PARTNERSHIP	1251910	37° 3'4.70"N	84°42'4.50"W
43	RURAL CELLULAR CORPORATION	1303154	37° 2'20.50"N	84°38'42.20"W
44	NEW CINGULAR WIRELESS PCS, LLC	1314542	37° 2'18.30"N	84°37'57.40"W
45	CELLCO PARTNERSHIP	1250175	37° 1'54.00"N	84°37'23.00"W
46	EAST KENTUCKY POWER COOPERATIVE, INC	1234158	37° 0'16.30"N	84°35'30.80"W
47	EAST KENTUCKY POWER COOPERATIVE, INC	1044514	37° 0'30.00"N	84°34'40.00"W
48	SBA INFRASTRUCTURES, LLC	1043977	37° 1'3.40"N	84°34'55.50"W
49	SBA INFRASTRUCTURES, LLC	1234225	37° 1'12.70"N	84°34'43.70"W
50	TOWERCO V HOLDINGS LLC	1043979	37° 6'13.30"N	84°35'39.50"W
51	EPPERSON AIR CONDITIONING & HEATING	1204492	37° 6'22.20"N	84°37'2.70"W
52	GLOBAL TOWER, LLC. THROUGH AMERICAN TOWERS, LLC	1235212	37° 6'12.00"N	84°35'46.00"W
53	CELLULAR PHONE OF KENTUCKY DBA = RAMCELL	1043625	37° 6'10.00"N	84°35'45.00"W
54	SBA TOWERS III LLC	1260416	37° 4'6.80"N	84°34'5.70"W
55	UNITI TOWERS LLC	1316984	37° 4'0.10"N	84°34'0.90"W
56	NORFOLK SOUTHERN CORPORATION	1035924	37° 4'60.00"N	84°37'52.00"W
57	CITY OF SOMERSET	1300944	37° 5'6.40"N	84°37'33.30"W

FCC REGISTERED TOWERS

TOWER	TOWER OWNER	ASR	LATITUDE	LONGITUDE
58	NEW CINGULAR WIRELESS PCS, LLC	1317834	37° 3'16.70"N	84°37'43.50"W
59	NEW CINGULAR WIRELESS PCS, LLC	1319263	37° 2'49.60"N	84°36'52.90"W
60	TILLMAN INFRASTRUCTURE, LLC	1329213	37° 3'12.50"N	84°36'22.90"W
61	NORFOLK SOUTHERN CORPORATION	1208691	37° 4'40.40"N	84°36'30.80"W
62	BLUE SKY TOWERS IV, LLC	1331489	37° 5'29.90"N	84°36'32.10"W
63	OUTREACH FOR JESUS	1291343	37° 5'12.30"N	84°36'7.70"W
64	KENTUCKY, COMMONWEALTH OF DBA = KY EMERGENCY WARNING SYSTEM KEWS	1219832	37° 5'35.30"N	84°35'47.80"W
65	SBA PROPERTIES, LLC	1230577	37° 4'26.30"N	84°37'31.20"W
66	MOBILE COMMUNICATIONS AMERICA, INC.	1047989	37° 6'10.00"N	84°35'45.00"W

PREPARED FOR:

APC Towers

8601 SIX FORKS RD
RALEIGH, NORTH CAROLINA 27615

PREPARED BY:

TeleCAD Wireless

1961 NORTHPOINT BLVD, SUITE 130
HIXSON, TN 37343
PH: 423-843-9500
FAX: 423-843-9509

DRAWN BY:	MDR
CHECKED BY:	DS

REVISIONS

NO.	DATE	BY	DESCRIPTION
1	01/21/26	JAE	ZONING ISSUE
0	11/06/25	JAE	ZONING ISSUE
A	10/14/25	MDR	PRELIMINARY REVIEW

ENGINEER'S STAMP:

STATE OF KENTUCKY
STEPHEN E. HUNT
25003
LICENSED PROFESSIONAL ENGINEER

NOT VALID WITHOUT P.E. STAMP & SIGNATURE

SITE NAME:
LV NANCY DT

ADDRESS:
376 LANETOWN ROAD
NANCY, KY 42544

COUNTY:
PULASKI

LATITUDE:
37° 4' 24.78" N

LONGITUDE:
84° 44' 30.23" W

SITE NUMBER:
KY-4055

SHEET TITLE:
OVERALL SITE PLAN

DRAWING NO.	REVISION:
ASR-2	1

Version: 2025-DEC

File Notice

My Recent Activity

Form Approved OMB No.2120-0001
Expiration Date: 05/31/2026

Privacy Act Statement (5 U.S.C. § 552a(e)(3)): Authority: Information solicited by the Federal Aviation Administration (FAA) Obstruction Evaluation/Airport Airspace Analysis (OE/AAA) is authorized by 49 U.S.C. § 44718 and 47101 Purpose: The FAA OE/AAA is an application used to evaluate all structures that may affect the national airspace system and defend against potential hazards to the safety and efficient use of the navigable airspace. The information collected is used to allow a user access to the OE/AAA and to administer the Aeronautical Study Process. Routine Uses: In accordance with the Privacy Act system of records notice, DOT/ALL 16 Mailing Management System and DOT/FAA 826 Petitions for Exemptions, Other than Medical Exemptions this information may be disclosed to officials within the federal government and the public in general. DOT/ALL 13 - Internet/Intranet Activity and Access Records, this information is routinely used; • To provide information to any person(s) authorized to assist in an approved investigation of improper access or usage of DOT computer systems; • To an actual or potential party or his or her authorized representative for the purpose of negotiation or discussion of such matters as settlement of the case or matter, or informal discovery proceedings; • To contractors, grantees, experts, consultants, detailees, and other non-DOT employees performing or working on a contract, service, grant cooperative agreement, or other assignment from the Federal government, when necessary to accomplish an agency function related to this system of records; and • To other government agencies where required by law.

Disclosure: Submission of the information is voluntary, however, failure to submit requested information will result in FAA's inability to grant you access to the system and may result in an inability of the FAA to process the notice or administer the aeronautical study process for the construction, alteration, activation, or deactivation proposed.

Failure to Provide All Requested Information May Delay Processing of your Notice

U.S. Department of Transportation
Federal Aviation Administration

Notice of Proposed Construction or Alteration

FOR FAA USE ONLY

Aeronautical Study Number
2025-ASO-24264-OE

Status: Studying

1. Sponsor

Name: APC Towers
Attn of: Jonathan Greene
Address: 8601 Six Forks Rd
Suite 250
City: Raleigh State: NC Zip: 27615
Country: US
Phone: tel:+1-704-724-8382 Fax:

2. Sponsor's Representative

Name: APC Towers, LLC
Attn of: Jonathan Greene
Address: 8601 Six Forks Road
City: RALEIGH State: NC Zip: 27615
Country: US
Phone: tel:+1-919-249-7732 Fax:

3. Notice of: Construction

4. Duration: Permanent (Months: Days:)

5. Work Schedule: N/A

6a. Type: Antenna Tower **6b. Name:** KY-4055 LV Nancy DT

7. Preferred Marking/Lighting: Not Marked/No Lighting

Current Marking/Lighting:

8. FCC Antenna Registration Number *(if applicable)*:

9. Latitude: See Collected Point(s)

10. Longitude: See Collected Point(s)

11. Datum: See Collected Point(s)

12. Nearest: City: Nancy State: Kentucky

13. Nearest *Public-use* or Military Airport or Heliport: LAKE CUMBERLAND RGNL(SME)

14. Distance from #13. *to Structure*: 37504 ft.

15. Direction from #13. *to Structure*: 281 deg

16. Site Elevation *(SE)*: See Collected Point(s)

17. Structure Height *(AGL)*: See Collected Point(s)

18. Overall Height (#16 + #17) *(AMSL)*: See Collected Point(s)

Current Overall Height (#16 + #17) *(AMSL)*: See Collected Point(s)

19. Previous FAA Aeronautical Study Number *(if applicable)*:

20. Description of Location:

See Survey

Processed 7460-2 Forms :

Supplemental Form 7460-2 : Add 7460-2

21. Description of

Proposal:
Construction of new telecommunications tower

Frequencies:

LOW	HIGH	ERP
6	7 GHz	42 dBW
6	7 GHz	55 dBW
10	11.7 GHz	42 dBW
10	11.7 GHz	55 dBW
17.7	19.7 GHz	42 dBW
17.7	19.7 GHz	55 dBW
21.2	23.6 GHz	42 dBW
21.2	23.6 GHz	55 dBW
614	698 MHz	1000 W
614	698 MHz	2000 W
698	806 MHz	1000 W
806	824 MHz	500 W
806	901 MHz	500 W
824	849 MHz	500 W
851	866 MHz	500 W
869	894 MHz	500 W
896	901 MHz	500 W
901	902 MHz	7 W
929	932 MHz	3500 W
930	931 MHz	3500 W
931	932 MHz	3500 W
932	932.5 MHz	17 dBW
935	940 MHz	1000 W
940	941 MHz	3500 W
1670	1675 MHz	500 W
1710	1755 MHz	500 W
1850	1910 MHz	1640 W
1850	1990 MHz	1640 W
1930	1990 MHz	1640 W
1990	2025 MHz	500 W
2110	2200 MHz	500 W
2305	2360 MHz	2000 W
2305	2310 MHz	2000 W

Specific Frequencies:

LOW	HIGH	ERP
3700	3980 MHz	1640 W
3700	3980 MHz	3280 W

LOW	HIGH	ERP
2345	2360 MHz	2000 W
2496	2690 MHz	500 W

Collected Point(s):

Label	Latitude	Longitude	Datum	AGL	SE	SE Validation	SE Comments
pt-1	37 04 24.78N	84 44 30.23W	NAD83	199 ft	1050 ft	PASSED	

Notice is required by 14 Code of Federal Regulations, part 77 pursuant to 49 U.S.C., Section 44718. Persons who knowingly and willingly violate the notice requirements of part 77 are subject to a civil penalty of $1,000 per day until the notice is received, pursuant to 49 U.S.C., Section 46301(a)

I hereby certify that all of the above statements made by me are true, complete, and correct to the best of my knowledge. In addition, I agree to mark and/or light the structure in accordance with established marking & lighting standards as necessary.

This FAA Form 7460-1 was submitted electronically on 11/24/2025 at 16:11 PM EST.

Add Document

Title	Type	File	
Survey	Survey	KY-4055-LV-NANCT-DT-SURVEY.pdf	DONE X

Letter	Date

Previous

KENTUCKY TRANSPORTATION CABINET

KENTUCKY AIRPORT ZONING COMMISSION

APPLICATION FOR PERMIT TO CONSTRUCT OR ALTER A STRUCTURE

JURISDICTION

602 KAR 50:030

Section 1. The commission has zoning jurisdiction over that airspace over and around the public use and military airports within the Commonwealth which lies above the imaginary surface that extends outward and upward at one (1) of the following slopes:

(1) 100 to one (1) for a horizontal distance of 20,000 feet from the nearest point of the nearest runway of each public use airport and military airport with at least one (1) runway 3,200 feet or more in length; or

(2) fifty (50) to one (1) for a horizontal distance of 10,000 feet from the nearest point of the nearest runway of each public use and military airport with its longest runway less than 3,200 feet in length.

Section 2. The commission has zoning jurisdiction over the use of land and structures within public use airports within the state.

Section 3. The commission has jurisdiction from the ground upward within the limits of the primary and approach surfaces of each public use airport and military airport as depicted on airport zoning maps approved by the Kentucky Airport Zoning Commission.

Section 4. The Commission has jurisdiction over the airspace of the Commonwealth that exceeds 200 feet in height above the ground.

Section 5. The owner or person who has control over a structure which penetrates or will penetrate the airspace over which the Commission has Jurisdiction shall apply for a permit from the Commission in accordance with 602 KAR 50:090.

INSTRUCTIONS

1. "Alteration" means to increase or decrease the height of a structure or change the obstruction marking and lighting.
2. "Applicant" means the person who will own or have control over the completed structure.
3. "Certification by Applicant" shall be made by the individual who will own or control the completed structure; or a partner in a partnership; or the president or authorized officer of a corporation company, or association; or the authorized official of a body politic; or the legally designated representative of a trustee, receiver, or assignee.
4. Prepare the application and forward to the Kentucky Dept. of Aviation, ATTN: Airport Zoning Commission, 90 Airport Drive, Frankfort KY 40601. For questions, telephone 502-782-4043.
5. The statutes applicable to the Kentucky Airport Commission are KRS 183.861 to 183.990 and the administrative regulations are 602 KAR Chapter 50.
6. When applicable, attach the following appendices to the application:

Appendix A. A 7.5 minute quadrangle topographical map prepared by the U.S. Geological Survey and the Kentucky Geological Survey with the exact location of the structure which is the subject of the application indicated thereon. (*The 7.5 minute quadrangle map may be obtained from the Kentucky Geological Survey, Department of Mines and Minerals, Lexington, KY 40506.*)

Appendix B. For structures on or very near to property of a public use airport, a copy of the airport layout drawing (ALP) with the exact location of the structure which is the subject of this application indicated thereon. (*The ALP may be obtained from the Chairperson of the local airport board or the Kentucky Airport Zoning Commission.*)

Appendix C. Copies of Federal Aviation Administration Applications (*FFA Form 7460-1*) or any orders issued by the manager, Air Traffic Division, FAA regional office.

Appendix D. If the applicant has indicated in item number 7 of the application that the structure will not be marked or lighted in accordance with the regulations of the Commission, the applicant shall attach a written request for a determination by the commission that the marking and lighting are not necessary. The applicant shall specifically state the reasons that the absence of marking and lighting will not impair the safety of air navigation.

Appendix E. The overall height in feet of the overhead transmission line or static wire above ground level or mean water level with span length 1,000 feet and over shall be depicted on a blueprint profile map.

PENALTIES

1. Persons failing to comply with the Airport Zoning Commission statutes and regulations are liable for a fine or imprisonment as set forth in KRS 183.990(3).
2. Applicants are cautioned: Noncompliance with Federal Aviation Administration Regulations may provide for further penalties.

KENTUCKY TRANSPORTATION CABINET

KENTUCKY AIRPORT ZONING COMMISSION

APPLICATION FOR PERMIT TO CONSTRUCT OR ALTER A STRUCTURE

APPLICANT (*name*) Jack Luckadoo	**PHONE** 910-520-7646	**FAX** N/A	**KY AERONAUTICAL STUDY #**
ADDRESS (*street*) 8601 Six Forks Road Suite 250	**CITY** Raleigh		**STATE** NC **ZIP** 27615
APPLICANT'S REPRESENTATIVE (*name*) Jack Luckadoo	**PHONE** 910-520-7646	**FAX** N/A	
ADDRESS (*street*) 8601 Six Forks Road Suite 250	**CITY** Raleigh		**STATE** NC **ZIP** 27615
APPLICATION FOR [X] New Construction [ ] Alteration [ ] Existing **DURATION** [X] Permanent [ ] Temporary (*months* *days*)			**WORK SCHEDULE** Start: 9/2026 End: 11/2026
TYPE [ ] Crane [ ] Building [X] Antenna Tower [ ] Power Line [ ] Water Tank [ ] Landfill [ ] Other	**MARKING/PAINTING/LIGHTING PREFERRED** [ ] Red Lights & Paint [ ] White- medium intensity [ ] White- high intensity [ ] Dual- red & medium intensity white [ ] Dual- red & high intensity white [x] Other		
LATITUDE 37° 04' 24.78"	**LONGITUDE** 84° 44' 30.23"		**DATUM** [X] NAD83 [ ] NAD27 [ ] Other
NEAREST KENTUCKY City: Nancy County: Pulaski	**NEAREST KENTUCKY PUBLIC USE OR MILITARY AIRPORT** Lake Cumberland Regional – (SME)		
SITE ELEVATION (AMSL, *feet*) 1051'	**TOTAL STRUCTURE HEIGHT** (AGL, *feet*) 250'		**CURRENT** (*FAA aeronautical study #*) 2025-ASO-24264-OE
OVERALL HEIGHT (*site elevation plus total structure height, feet*) 1301'			**PREVIOUS** (*FAA aeronautical study #*) N/A
DISTANCE (*from nearest Kentucky public use or Military airport to structure*) 37504'			**PREVIOUS** (*KY aeronautical study #*) N/A
DIRECTION (*from nearest Kentucky public use or Military airport to structure*) 281°			

DESCRIPTION OF LOCATION (*Attach USGS 7.5 minute quadrangle map or an airport layout drawing with the precise site marked and any certified survey.*)

1A Letter Attached

DESCRIPTION OF PROPOSAL

Proposed new Antenna Tower

FAA Form 7460-1 (*Has the "Notice of Construction or Alteration" been filed with the Federal Aviation Administration?*)
[ ] No [X] Yes, when? **11/24/2025**

CERTIFICATION (*I hereby certify that all the above entries, made by me, are true, complete, and correct to the best of my knowledge and belief.*)

PENALITIES (*Persons failing to comply with KRS 183.861 to 183.990 and 602 KAR 050 are liable for fines and/or imprisonment as set forth in KRS 183.990(3). Noncompliance with FAA regulations may result in further penalties.*)

NAME	**TITLE**	**SIGNATURE**	**DATE**
Jack Luckadoo	Project Manager	Jack Luckadoo	1/14/2026

COMMISSION ACTION

[ ] Chairperson, KAZC
[ ] Administrator, KAZC

[ ] Approved
[ ] Disapproved

SIGNATURE **DATE**

GEOTECHNICAL REPORT OF SUBSURFACE INVESTIGATION

December 2, 2025

PROPOSED MONOPOLE TOWER
LV NANCY DT
(KY-4055)

376 Lanetown Rd
Nancy, KY 42544

37.073549, -84.7417317

Prepared for:

APC Towers

Prepared by:

ENGINEERED TOWER SOLUTIONS

STATE OF KENTUCKY
RAPHAEL MOHAMED
24429
LICENSED
PROFESSIONAL ENGINEER

Tyler Schueller
Geotechnical Engineer I

Raphael Mohamed, P.E.
Registered KY 24429

Reviewed by: Jorge Varela, P.E.
Senior Geotechnical Engineer

Raphael Mohamed
Digitally signed by Raphael Mohamed
DN: CN=Raphael Mohamed, dnQualifier=A01410C00000198AEAA697700124F74, O=Engineered Tower Solutions, C=US
Date: 2025.12.02 15:05:50-05'00'

Engineered Tower Solutions, PLLC - 3227 Wellington Court - Raleigh, NC 27615
(919) 782-2710 - TX Registration Firm # F-17623

Project Summary

Item	Description
Project Description	A geotechnical exploration and report have been prepared for this proposed 199-foot monopole tower. Included in this report are the results of the field exploration and the recommendations for the design of the foundation system.
Site Coordinates	Latitude: 37.073549 Longitude: -84.7417317
Site Condition	The proposed tower will be installed at 376 Lanetown Rd in Nancy, Kentucky.
Frost Depth	Based on the TIA Standard (TIA-222-H), dated October 2017, the recommended design frost penetration depth to be used for Pulaski County, KY is 30 inches (2.5 ft).
Groundwater	Groundwater was not encountered at the time of drilling. Please note that subsurface water levels will fluctuate with seasonal and cyclical temperatures and precipitation and can be higher or lower at other times.
Proposed Foundation	We assume the proposed foundation will be supported with either pad and pier or drilled shaft (caisson).

Field Exploration

Item	Description
Date	November 24th, 2025
Number of Borings	1
Location	Latitude: 37.073549 Longitude: -84.7417317
Equipment Used	Mobile B-51
Advancement Method	Hollow Stem Auger (HSA) and Rock Coring
Sampling Method	ASTM D-1586 with 1.5 I.D. Split Spoon Sampler ASTM D2113 Standard Practice for Rock Core Drilling and Sampling of Rock for Site Exploration

Laboratory Classification and Testing

Standard	Description
ASTM D2488	Standard Practice for Description and Identification of Soils
ASTM G187	Standard Test Method for Measurement of Soil Resistivity Using the Two-Electrode Soil Box Method

Subsurface Profile

Based on the results of our borings, the soils beneath the surface can be summarized in the table below:

Material Encountered	Approximate Depth to Bottom of Stratum	Description	Consistency / Density
SAND	5	Brown clayey sand	Medium Dense
PWR	7.5	Partially Weathered Rock sampled as clayey sand	--
LIMESTONE	17.5	Gray limestone, slightly weathered and slightly fractured	--

Detailed descriptions of conditions encountered at each exploration point are indicated on the individual logs in the Appendix B. Stratification boundaries on the boring logs represent the approximate location of changes in soil types; in-situ, the transition between materials may be gradual.

Groundwater was not encountered at the time of drilling. Groundwater levels will fluctuate with seasonal and climatic changes and may be different at other times.

Earthwork Recommendations – Equipment Mat

Earthwork is anticipated to include excavations and fill placement. The following sections provide recommendations for use in the preparation of the equipment mat foundation area and access drive.

Site Preparation

The subgrade should be evaluated under the direction of the Geotechnical Engineer. Areas where soft material are present or excessively wet or dry material should either be removed, or moisture conditioned and recompacted.

Fill Material Types

Soil Type	USCS Classification	Acceptable Parameters (for Structural Fill)
Imported Low- to Moderate- Plasticity Soil [2]	CL, ML, SC or SM	All locations and elevations
Sand / Gravel with greater than 12% fines	GW/GP, SW/SP	Crushed stone base course may be used for the access roadway or beneath shallow foundations as a replacement material for overexcavated soils.
Near-Surface On-site soils [2]	SC	On-site soils generally appear suitable for use as fill when they contain at least 12% fines (clay and/or silt) and are compacted at an appropriate moisture content.

1. Controlled, compacted fill should consist of approved materials that are free of organic matter and debris. A sample of each material type should be submitted to the geotechnical engineer for evaluation.
2. Low- to moderate-plasticity cohesive soil or granular soil having at least 12% fines

Fill Compaction Requirements

Item	Structural Fill	General Fill
Maximum Lift Thickness	8 inches or less in loose thickness when heavy, self-propelled compaction equipment is used	Same as Structural fill
Minimum Compaction Requirements [1, 2]	98% of max. below foundations and within 1 foot of finished pavement subgrade 95% of max. above foundations, below floor slabs, and more than 1 foot below finished pavement subgrade	92% of max.
Water Content Range [1]	Low plasticity cohesive: -2% to +3% of optimum High plasticity cohesive: 0 to +4% of optimum Granular: -3% to +3% of optimum	As required to achieve min. compaction requirements

1. Maximum density and optimum water content as determined by the standard Proctor test (ASTM D 698).
2. High plasticity cohesive fill should not be compacted to more than 100% of standard Proctor maximum dry density.

Excavations

Groundwater was not encountered at the time of drilling. Although not expected, if encountered in deep trench excavations during construction, groundwater or perched groundwater will require dewatering until backfilling operations are complete.

All excavations that may be required should, at a minimum, comply with applicable local, state and federal safety regulations, including the current OSHA Excavation and Trench Safety Standards to provide stability and safe working conditions.

Slopes

For permanent slopes in unreinforced compacted fill areas, we recommended maximum configurations of 3:1 (Horizontal: Vertical) for the cohesive soils (clay) found at the site.

If steeper slopes are required for site development, stability analyses should be completed to design the grading plan. The face of all slopes should be compacted to the minimum specification for fill embankments. Fill slopes should be overbuilt and trimmed to compacted material.

Earthwork Construction Considerations

The near-surface, on-site soils will lose strength when exposed to moisture. To the extent practical, earthwork should be performed during drier periods of weather. Increased remedial measures due to wet and soft or otherwise unsuitable conditions should be expected if earthwork is performed during colder and wetter periods of weather.

A qualified geotechnical engineer should be retained during the earthwork phase of the project to observe earthwork and to perform necessary tests and observations during subgrade preparation; to monitor proof-rolling, placement and compaction of controlled compacted fills, and backfilling of excavations to the completed subgrade.

Foundations Recommendations

The following recommendations are made based on our review of the test boring data and our past experience with similar projects and subsurface conditions. Ultimate soil strength parameters are presented on table below.

Ultimate Strength Parameters

Boring #	Depth (ft)	Unified Soil Classification	Total Unit Weight (pcf)	Friction Angle (degrees)	Cohesion (psf)
B-1	0.0 – 3.0	SC	115	30	--
	3.0 – 5.0	SC	120	30	--
	5.0 – 7.5	PWR	130	38	--
	7.5 – 12.5	LIMESTONE	145	--	10,000
	12.5 – 17.5	LIMESTONE	145	--	10,000

1. Groundwater was not encountered at the time of drilling.

Based on the subsurface conditions and typical design foundation loads for similar monopole towers, we recommend that either a caisson (drilled shaft) or a pad/pier be used to support the new tower.

Modulus of Subgrade Reaction

A vertical and horizontal modulus of subgrade reaction may be derived using the following equations and soils parameters expressed in the above table:

$$k_{s\text{-}v} = 12 \cdot SF \cdot q_a$$

$$k_{s\text{-}h} = k_{s\text{-}v} \cdot B$$

Where:

q_a = Allowable Bearing Capacity (ksf)
SF = Safety Factor
B = Base width (ft), use 1 if B< 1ft
$k_{s\text{-}v}$ =Vertical Modulus of Subgrade Reaction (kcf)
$k_{s\text{-}h}$ = Horizontal Modulus of Subgrade Reaction (ksf)

Caisson (Drilled Shaft)

Should caissons (drilled shafts) be used, the caissons (drilled shafts) will achieve compressive (downward) and tensile (uplift) resistance through skin friction along the sides of the shafts. In addition to skin friction, bearing resistance at the caisson's tip will contribute to compressive capacity. We recommend the values given the table below be used for this project. Please note the tip bearing capacity and skin frictions are net ultimate and ultimate values respectively. Appropriate factors of safety or resistance factors should be used. Lateral loads can be resisted by the lateral stiffness of the soil. Parameters for analysis of the laterally loaded caisson are also given the table below.

Caisson (Drilled Shaft) Parameters

Depth (ft)	Net Ultimate Tip Bearing Capacity (ksf)	Ultimate Skin Friction[1] (ksf)	Lateral Modulus (pci)	ε_{50} (in/in)
0.0 – 3.0	--	--	--	--
3.0 – 5.0	--	0.2	90	--
5.0 – 7.5	--	0.4	225	--
7.5 – 12.5	40	5.0	2,000	0.001
12.5 – 17.5	40	5.0	2,000	0.001

1. We recommend the skin friction be ignored for the top 3 ft of the caisson

Based on the subsurface soil conditions, excavations for the caissons (drilled shafts) should be possible using a large, truck-mounted, hydraulic-advanced drill rig. All debris, loose or disturbed soil should be removed from the excavation prior to placing reinforced steel and/or concrete. Reinforcing steel and/or concrete should be placed immediately upon completion of the excavation.

The excavations may be susceptible to caving. Drilling fluid or casing could be used to assist in keeping the drilled hole open. If casing is used, we recommend it be removed from the excavation as concrete is being placed. Continuous vibration or other approved methods should be used during casing withdrawal to reduce the potential for void-space formation within the concrete. If water is present during concrete placement and/or drilling fluids are used to maintain hole stability, concrete should be pumped or otherwise discharged to the bottom of the hole via a hose or tremie

pipe. The end of the hose or tremie pipe must remain below the top surface of any water, drilling fluid and the in-place concrete at all times. Additionally, concrete should be consolidated using vibration methods over the entire length and width of the caissons and the consolidation should be performed only after these fluids are removed and to the extent possible.

Pad & Pier / Single Mat Foundation

If the site has been prepared in accordance with the requirements noted in *Earthwork Recommendations – Equipment Mat,* the tower's foundation capacity can be determined using the soil's bearing capacity, passive pressure resistance, and a sliding friction factor.

Net Ultimate Bearing Capacity and Sliding Friction Factor

Depth[2] (ft)	Net Ultimate Bearing Capacity[1] (psf)	Sliding Friction Factor[1]
0.0 – 2.0	--	--
2.0 – 12.0	8,500	0.35

1. This value is a net ultimate value and an appropriate factor of safety or resistance factor should be used

Ultimate Passive Pressure and Friction Factor

Boring #	Depth (ft)	Ultimate Passive Pressure[1] (psf)[1]
B-1	0.0 – 2.0	0 – 600
	2.0 – 4.0	600 – 1,200
	4.0 – 8.0	1,200 – 2,800
	8.0 – 12.0	2,400 – 6,000
	12.0 – 20.0	6,000 – 12,400

1. Ultimate passive pressure can be interpolated for foundation depths with the depth ranges given

Seismic Parameters

The seismic design requirements for buildings and other structures are based on Seismic Design Category. Site Classification is required to determine the Seismic Design Category for a structure. The Site Classification is based on the upper 100 feet of the site profile defined by a weighted average value of either shear wave velocity, standard penetration resistance, or undrained shear strength in accordance with Section 20.4 of ASCE 7 and the International Building Code (IBC)

Seismic Site Classification

Item	Seismic Parameter
2018 International Building Code Seismic Site Classification	D[1]
Design Spectral Response Acceleration Parameters	S_{ds} = 0.24g S_{d1} = 0.15g

1. The IBC seismic site classification is based on the subsurface profile depth of 100 feet. The scope of work did not authorize exploration to a depth of 100 feet. A seismic Site Soil Classification of D should be used if insufficient details are known about the 100-foot soil profile.

Soil Resistivity

Laboratory soil resistivity test were conducted according to procedures designated in ASTM G187 and test results are presented in the following table. Soil resistivity values will vary with temperature and moisture content changes and may be different at other times.

Soil Resistivity Testing Results

Boring	Sample Depth (ft)	Resistivity (Ohm-cm)
B-3	3.5 – 5.0	48,000

LIMITATIONS OF REPORT

This report has been prepared in accordance with generally accepted geotechnical engineering practices for the specific application of this project. The conclusions in this report are based on the applicable standards of our practice in this geographic area at the time this report was prepared. No other warranty, expressed or implied, is made.

The analyses and conclusions submitted herein are based, in part, upon the data obtained from the subsurface exploration performed for this analysis. The soil and ground water conditions can vary across the site. Opinions and conclusions are subject to change if new or additional information is submitted for review.

APPENDIX A
LOCATION INFORMATION

SITE LOCATION PLAN
LV NANCY DT (KY-4055)
Job Number: 25141630

ENGINEERED TOWER SOLUTIONS

BORING LOCATION PLAN
LV NANCY DT (KY-4055)
Job Number: 25141630

ENGINEERED TOWER SOLUTIONS

SITE PHOTO
LV NANCY DT (KY-4055)
Job Number: 25141630

APPENDIX B
SOIL TEST BORING

BORING NUMBER B1

ENGINEERED TOWER SOLUTIONS

CLIENT APC Towers
PROJECT NUMBER 25141630
DATE 11/24/2025
DRILLING METHOD Hollow Stem Auger (HSA) and Rock Coring
DRILLING EQUIPMENT Mobile B-51
LOGGED BY T. Schueller
NOTES

PROJECT NAME LV Nancy DT (KY-4055)
PROJECT LOCATION 376 Lanetown Rd, Nancy, KY 42544
COORDINATES 37.073549, -84.7417317
GROUND WATER LEVELS:
AT TIME OF DRILLING --- Not Encountered
AT END OF DRILLING --- Not Encountered
0hrs AFTER DRILLING --- Not Encountered

DEPTH (ft)	GRAPHIC LOG	MATERIAL DESCRIPTION	SAMPLE TYPE NUMBER	RECOVERY % (RQD)	BLOW COUNTS (N VALUE)
0		**CLAYEY SAND (SC),** brown, moist, medium dense.	SPT 1		4-6-7 (13)
			SPT 2		3-8-12 (20)
5		**PARTIALLY WEATHERED ROCK (PWR),** , Sampled as Clayey Sand (SC).	SPT 3		11-50/3"
10		**LIMESTONE,** , Slightly Weathered and Slightly Fractured.	RC 4	95 (85)	
15			RC 5	82 (61)	

Bottom of borehole at 17.5 feet.

DIRECTIONS FROM THE PULASKI COUNTY COURTHOUSE

From the Pulaski County Clerk's Office, toward W Mt. Vernon St, turning right onto W Mt. Vernon St. Continue to Ohio St and then continue onto KY-80 BUS / W Ogden St for approximately 10 miles. Turn right onto Lanetown Road and the site will be on the right in approximately 0.4 miles.

Prepared by Clark, Quinn, Moses, Scott, & Grahn, LLP | 317-637-1321

PURCHASE AGREEMENT

THIS PURCHASE AGREEMENT (this "Agreement") is made effective as of the latter signature date hereof (the "Effective Date"), by and between APC Towers IV, LLC, a Delaware limited liability company ("Buyer"), and David B. and Judy A. Coner (collectively, "Seller").

WITNESSETH:

WHEREAS, Seller owns the real property described on **Exhibit A** hereto (the "Property");

WHEREAS, Buyer desires to purchase from Seller, and Seller desires to sell to Buyer a 100' x 100' (10,000 square foot portion) of the Property together with non-exclusive access and utility easements as depicted on **Exhibit B** (the "Premises") upon the terms and conditions hereinafter set forth; and

NOW THEREFORE, for and in consideration of the covenants and agreements herein contained and other good and valuable consideration, the receipt and sufficiency of which are hereby acknowledged, the parties hereto agree as follows:

1. Transactions.

1.1. Premises. Seller agrees to sell and convey to Buyer, and Buyer hereby agrees to buy and purchase the Premises, together with all tenements, hereditaments, and appurtenances incident thereto; access or utility easements; and all right title and interest in any land lying within any street, alley or roadway adjoining or serving the Premises.

2. Purchase Price. The Purchase Price for the Premises shall be the sum of [redacted]. The first half of the Purchase Price shall be paid to Seller at Closing (as defined in Section 8 hereof), by certified check or wire transfer of immediately available funds to an account designated in writing by Seller. The second half of the Purchase Price shall be paid to Seller on the one-year anniversary of the Closing, by certified check or wire transfer of immediately available funds to an account designated in writing by Seller. Buyer shall pay Seller a due diligence fee of [redacted] within three (3) business days of the Effective Date.

3. Title and Feasibility Period. Seller covenants to convey to Buyer at Closing (as defined in Section 8 hereof) good and marketable fee simple title in and to the Property. For the purposes of this Agreement, "good and marketable fee simple title" shall mean fee simple ownership, free of all claims, liens and encumbrances of any kind or nature whatsoever other than the following (hereinafter called the "Permitted Exceptions"): (i) current state and county ad valorem real property taxes not due and payable on the date of Closing; (ii) easements for the maintenance of public utilities that serve only the Premises and that do not adversely affect Buyer's intended use of the Premises; and (iii) such other matters, if any, as may be subsequently approved in writing by Buyer. Such title shall also be insurable by Old Republic Title (the "Title Company") at then current standard rates under the standard form of ALTA owner's policy of title insurance currently in effect at the time of Closing (the "Title Policy"), with the standard printed exceptions therein deleted and without exception other than for the Permitted Exceptions. Prior to the expiration of the Feasibility Period (as defined below), Buyer shall furnish Seller with a written statement (the "Title and Survey Objection Letter") of any objections affecting title to the Premises and any objections to items shown on the Survey (as defined in Section 4) (collectively, the "Objections"). Within 30 days after Seller's receipt of the Title and Survey Objection Letter, Seller shall cure such Objections. If Seller fails to cure such Objections within such 30 day period, then at the option of Buyer, in Buyer's sole discretion, Buyer may, by written notice to Seller, (i) elect to terminate this Agreement and neither party shall have any further rights or obligations under this Agreement; (ii) elect to consummate its purchase of the Premises and proceed to Closing irrespective of such Objections; or (iii) elect to extend the date of Closing for an additional 10 days in order to permit Seller additional time to undertake reasonable efforts to cure such Objections. Seller's failure to cure all such Objections within such additional 10 day period shall then permit Buyer to elect one of its options under the above clauses (i) or (ii) of this Section 3. Notwithstanding the foregoing, Seller covenants that all liens and exceptions to Seller's title to the Property which secure the payment of money, including, without limitation, judgment liens, mortgages, mechanics' liens and delinquent taxes or taxes which are otherwise due and payable on or before the Closing (the "Monetary Liens") shall be removed by Seller, whether or not Buyer has designated such Monetary Liens in its Title and Survey Objection Letter. The "Feasibility Period" means the period commencing on the Effective Date and ending at 11:59 p.m. one (1) year thereafter. Buyer shall have the right to

extend the Feasibility Period for two (2) additional periods of one (1) year each. The Feasibility Period will automatically be extended by such periods unless Buyer provides Seller with written notice of Buyer's intent not to extend the Feasibility Period at least thirty (30) days prior to the expiration of the Feasibility Period or the first extended Feasibility Period, as applicable. Buyer will pay Seller an additional due diligence fee of [redacted] within thirty (30) days of the commencement of each extended Feasibility Period. For the avoidance of doubt, the due diligence fees shall not be applied to the Purchase Price.

4. Survey. Buyer may elect, at Buyer's expense, to order a boundary, as built or similar survey of the Premises (the "Survey") from a surveyor duly licensed under the laws of the state in which the Premises is located. If Buyer elects, in its sole discretion, Seller shall grant the Premises at Closing by general warranty deed (the "Deed") using the legal description(s) prepared from the Survey.

5. Conditions Precedent to Buyer's Performance; Conditions Precedent to Closing.

5.1. Buyer's performance of its obligations under this Agreement is contingent upon the Buyer's determination during the Feasibility Period, in Buyer's sole and absolute discretion, that:

5.1.1 the title to the Premises is suitable for Buyer's intended use;

5.1.2. the Survey of the Premises does not reveal any issues that would prevent or hinder Buyer's intended use of the Premises;

5.1.3 the use of the Premises by Buyer and the financial transaction contemplated herein is satisfactory to Buyer (this determination being made in Buyer's sole discretion); and

5.1.4 the Premises may be subdivided from the Property.

5.2. If Buyer desires to terminate this Agreement because of the failure of any condition precedent set forth in Section 5.1, then Buyer shall notify Seller in writing of such termination on or prior to the expiration of the Feasibility Period and this Agreement shall otherwise be deemed null and void.

5.3. Buyer's obligation to consummate the Closing on the Premises shall be subject to the following conditions precedent:

5.3.1. Seller's performance of its obligations under this Agreement;

5.3.2. at Closing the status of title to the Premises shall be unchanged from the status of title to the Property as of the Effective Date, except for any title remediation requested by Buyer and performed by Seller in accordance with the terms of this Agreement;

5.3.3. there is no moratorium or other governmental prohibition in force of a general application that would prevent the continued use and future development of the Premises by Buyer;

5.3.4. all of Seller's representations and warranties in this Agreement shall be true and correct as of the Effective Date and at Closing; and

5.3.5 To the best of Seller's knowledge, the Property is free of any and all adverse environmental conditions or petroleum products or distillates and any flammable, implosive, explosive or radioactive substance, material, or waste or any hazardous wastes, toxic substances or similar substances or materials defined as hazardous or toxic under any federal, state or local governmental law, regulation or ordinance.

5.4. If any of the conditions specified in section 5.3 are not satisfied and/or do not exist at the time of Closing, Buyer, at its sole option, may either notify Seller that it is terminating this Agreement or may extend from time to time the date for Closing to permit fulfillment of such conditions, which extension(s) shall not exceed a period in the aggregate of 10 days following the date set for Closing pursuant to Section 8.

5.5. In order to assist Buyer in its evaluations and determinations under sections 5.1 and 5.3, Buyer shall, at all times have the privilege of going upon the Property with its employees, contractors or agents as needed to inspect,

examine, survey and otherwise do what the Buyer deems necessary in the evaluation, engineering and planning for the continued use of the Premises. Such privilege shall include the right to make soil tests, borings, percolation tests and tests to obtain other information necessary to determine surface, subsurface, environmental and topographic conditions; provided however, that the Buyer shall hold the Seller harmless from any damages incurred through the exercise of such privilege.

6. Representations and Warranties of Seller. Seller hereby represents, warrants, and agrees as of the date hereof, and will reaffirm same as of the date of Closing, as follows:

6.1 Seller has the right, power and authority to (a) sell the Premises to Buyer in accordance with the terms and conditions hereof, (b) execute and deliver this Agreement and all other documents to be executed and delivered, either simultaneously herewith or at Closing, in connection with the transaction contemplated herein, and (c) perform all obligations of Seller that arise under this Agreement or under such documents.

6.2 Seller is the sole owner of fee simple title to all of the Premises, subject to the Permitted Exceptions and the title exceptions agreed to by Buyer in writing. Seller has granted no outstanding options to purchase or rights of first refusal with respect to all or any part of the Premises and has entered into no outstanding contracts with others for the sale, mortgage, pledge, hypothecation, assignment, lease or other transfer of all or any part of the Premises.

6.3 Seller has paid, or will pay at or prior to Closing, all taxes, assessments, charges, fees, levies and impositions relating to the Premises coming due prior to the Closing.

6.4 Between the date hereof and the date of Closing, Seller covenants and agrees as follows:

6.4.1 Leases. Seller shall not enter into any new leases or tenancies with respect to the Premises;

6.4.2 Encumbrances. Seller shall not grant or permit any new encumbrances on the Premises without the prior written consent of Buyer, which consent may be withheld in the sole discretion of Buyer;

6.4.3 Alteration of Premises. Seller shall not in any way materially alter the present state of the Premises; and

6.4.4 Other Acts. Seller shall not undertake or omit to undertake any other act which might have a material, adverse effect on the Premises or the operation thereof as currently conducted.

6.5 Seller has not received notice of condemnation of all or any part of the Premises, notice of any assessment for public improvements, or notices with respect to any zoning ordinance or other law, order, regulation or requirement relating to the use or ownership of the Premises, and there exists no violation of any such governmental law, order, regulation or requirement.

6.6 Seller is not indebted to the federal government or any other public authorities for delinquent taxes, assessments or other charges of any nature whatsoever for which a lien has been or could be asserted against the Premises or the Buyer, or affect Buyer's interest in and to the Premises, and which will not be fully paid and discharged or released upon or prior to Closing.

6.7 There are no leases or licenses, written or oral, affecting the Premises; and no other party has the right to occupy or utility any portion of the Premises.

6.8 Seller has no knowledge of any litigation pending or threatened, which in any manner affects the Premises.

6.9 The Premises does not constitute or form a part of the homestead, constitutional or otherwise, of Seller, nor does the Seller reside on any part of the Premises.

6.10 Seller has no knowledge of any fact or condition that could result in the termination or reduction of the current access from the Premises to existing highways and roads, or to sewer, electric, or other utility services serving the Premises.

6.11 The Premises is vacant and there are no improvements located thereon.

The representations and warranties made hereunder shall survive the Closing. Seller agrees to indemnify and hold Buyer harmless from and against all demands, claims, actions, causes of action, assessments, expenses, costs, damages, losses, and liabilities (including reasonable attorneys' fees and costs) incurred by reason of the breach of any of the warranties and representations made herein.

7. Seller's Undertakings. Seller shall deliver to Buyer as soon as reasonably practicable true, correct and complete copies of any surveys, title reports, environmental reports, or other documents and items reasonably requested by Buyer and related to the Premises, to the extent that the same exist and are in the possession and/or control of Seller or an affiliate thereof. Seller shall promptly cooperate with Buyer's requests in connection with Buyer obtaining all land use, zoning and/or subdivision approvals from the applicable governmental bodies necessary for the Buyer to use the Property for its intended use. Seller shall cooperate with Buyer in connection with the subdivision of the Premises from the Property.

8. Closing, Delivery of Deed, and Possession. The closing ("Closing") of this transaction shall occur on or before 10 days following the expiration of the Feasibility Period (or at any time either within the Feasibility Period or within 10 days thereafter, upon 4 days notice by Buyer to Seller) subject to Buyer's extension rights set forth in Section 3 and Section 5.4 hereof. At Closing, Seller shall deliver:

8.1 The Deed duly executed by Seller and conveying to Buyer good, marketable, and insurable fee simple title to the Premises, subject only to the Permitted Exceptions, with the legal description from the Survey, and accompanied by all transfer tax returns required by any governmental agency, subject only to further modification in order that such Deed shall comply with the laws, rules and regulations of the state or municipal governmental unit in which the Property is located.

8.2 A standard title affidavit acceptable to Buyer and Seller (which shall include a non-foreign person affidavit), and which would be sufficient in form for the Title Company to issue the Title Policy without the standard exceptions, including, without limitation, mechanic's, materialmen's or other statutory liens, unrecorded easements, and parties in possession.

8.4 Seller's certificate stating that all representations and warranties made by Seller in this Agreement are true in all respects as of the Closing.

8.5 A closing statement duly executed by Seller and Buyer setting forth in reasonable detail the financial transaction contemplated by this Agreement, including without limitation the Purchase Price, all prorations, the allocation of costs specified herein, and the source, application and disbursement of all funds.

8.6 Any and all documents and papers that may be reasonably necessary in connection with the consummation of the transactions contemplated by this Agreement.

8.7 Real property taxes shall be prorated as of the date of Closing based upon current or last available property tax bills. If the applicable real property tax bill is for a larger tract, which encompasses the Property and the Premises, then the portion of such tax bill applicable to the Premises shall be determined by prorating the total bill based upon the ratio of the acreage of the Premises to the total land comprised by such bill. Any real estate transfer taxes due in connection herewith shall be paid by Buyer at Closing. Buyer shall pay for the preparation and recording of the Deed and any escrow or closing fees payable to the Title Company. Seller shall pay the costs associated with the release of any mortgage, liens or encumbrances against the Property, its own counsel fees, and any brokerage commissions due in connection with this transaction. Buyer shall pay for any title search fees, the Survey, its own counsel fees and the Title Policy premium. The Premises shall be conveyed by Seller to Buyer free of all encumbrances, tenancies, and liens and except for (x) ad valorem taxes for the year of Closing not yet due and payable and (y) such other title exceptions as are specifically approved in writing by Buyer.

9. Acts Following Closing. After Closing, in addition to such other matters as may otherwise be required herein, if there shall remain any matter to be done which shall not have been completed prior to Closing, then both Seller and Buyer agree with the other to promptly take such steps as may be reasonable or necessary after Closing in order to complete such matters.

10. Broker/Seller's Agent. Seller and Buyer each represent to the other that no real estate broker, commission agent or other person is entitled to any commission with respect to the transactions herein contemplated (collectively, "Broker"). Except with regard to a breach of Buyer's warranty set forth in this Section 10, Seller hereby indemnifies and holds Buyer harmless from any loss, cost, damages and expenses arising out of a brokerage, commission, or fee due or alleged to be due in connection with this Agreement or the transactions contemplated hereby. Except with regard to a breach of Seller's warranty set forth in this Section 10, Buyer hereby indemnifies and holds Seller harmless from any loss, cost, damage and expense arising out of a brokerage commission or fee due or alleged to be due arising out of breach of Buyer's warranty set forth in this Section 10. The foregoing representations and warranties shall survive Closing.

11. Risk of Loss. If legal title under this Agreement has not been transferred to Buyer, and all or a material part of the Premises is destroyed without the fault of Buyer or subject to an eminent domain action, Seller assumes all risk of loss, and Buyer shall thereupon forthwith be entitled, at its option to (i) terminate this Agreement, in which event both parties shall be relieved of all liability hereunder or (ii) proceed to Closing, in which case all insurance or, as applicable, condemnation proceeds will be assigned to and payable to Buyer.

12. Remedies of Seller. In the event of Buyer's default under this Agreement, Seller agrees to provide Buyer with written notice specifying the nature of such default. Buyer shall have 30 days from the date of receipt of said notice to cure said default. In the event Buyer does not cure such default within such 30 day period, and provided that Seller has fully performed all of its obligations hereunder, then Seller may terminate this Agreement.

13. Remedies of Buyer. If Seller has breached its covenants and agreements under this Agreement or has failed, refused or is unable to consummate the purchase and sale contemplated herein by the date of Closing then Buyer may, at its sole election: (i) terminate this Agreement, in which case Seller shall be obligated to return the Deposit, (ii) pursue specific performance plus the cost of obtaining specific performance or (iii) pursue any or all of its remedies at law and equity, including, but not limited to, monetary damages.

14. Miscellaneous Provisions.

14.1. Assignability/Binding Effect. This Agreement may be assigned by Buyer prior to the Closing, including but not limited to an assignment by Buyer to a affiliate of Buyer. Seller may not assign its rights or obligations under this Agreement, except with the written consent of Buyer, which consent may be granted or withheld in Buyer's sole discretion. This Agreement shall be binding upon and inure to the benefit of the parties' respective heirs, personal representatives, successors, and assigns. No representations, warranties or promises pertaining to this Agreement or to the Premises have been made by, or shall be binding upon, either Buyer or Seller, except as expressly stated herein.

14.2. Notices. All notices required to be given by any of the provisions of this Agreement, unless otherwise stated, shall be in writing and delivered in person or by a national overnight delivery service (and shall be effective when received, when refused or when the same cannot be delivered) to the appropriate party at the address set forth below (or such other address as has been designated in writing by either party hereto):

To Buyer:	APC Towers IV, LLC 8601 Six Forks Road Suite 250 Raleigh, NC 27615 Attention: Daniel C. Agresta III, President & CEO	To Seller:	David Coner and/or Judy Coner 2836 E 150 S Franklin, IN 46131-7418

14.3. Survival of Provisions. The representations, indemnities, warranties, and other provisions of this Agreement shall survive the delivery of the fully executed Deed, and the parties hereto shall comply with the provisions hereof notwithstanding such delivery.

14.4. Severability. If any provision of this Agreement is deemed unenforceable in whole or in part, such provision shall be limited to the extent necessary to render the same valid or shall be excised from this Agreement, as circumstances require, and this Agreement shall be construed as if such provision had been so limited or as if such provision had not been included herein, as the case may be.

14.5. Attorney's Fees. In the event of any dispute arising hereunder and if litigation is commenced, the prevailing party shall be entitled to recover from the other party all costs and expenses incurred in connection with such litigation, including, but not limited to, reasonable attorneys' fees and costs.

14.6. Entire Understanding and Amendment. This Agreement constitutes the entire understanding between the parties with regard to the subject matter hereof and there are no representations, inducements, conditions, or other provisions other than those expressed herein. This Agreement may not be modified, amended, altered or changed in any respect except by written agreement and signed by the party to be charged.

14.7. Applicable Law. This Agreement shall be governed by and construed in accordance with the laws of the state or commonwealth where the Premises is located.

14.8. Captions and Headings. The captions and headings in this Agreement are for convenience and shall not be held or deemed to define, limit, describe, explain, modify, amplify or add to the interpretation, construction or meaning of any provisions of or the scope or intent of this Agreement.

14.9 Cumulative Remedies. Each and every one of the rights, benefits and remedies provided to Buyer or Seller by this Agreement, or by any instrument or documents executed pursuant to this Agreement, are cumulative and shall not be exclusive of any other of said rights, remedies and benefits allowed by law or equity to the Buyer.

14.10 Counterparts. This Agreement may be executed in one or more counterparts, and by the different parties hereto in separate counterparts, each of which when executed shall be deemed to be an original but all of which taken together shall constitute one and the same agreement.

[Signatures Appear on Following Pages]

IN WITNESS WHEREOF, the parties hereto have caused this Agreement to be executed as of the latter of the signature dates.

BUYER:

APC TOWERS IV, LLC
a Delaware limited liability company

By: _____

Name: Daniel C. Agresta III

Title: President & CEO

Date: 8/22/2025

SELLER:

David B. Coner

David B. Coner

Date: 8/22/2025

Judy A. Coner

Judy A. Coner

Date: 8-22-2025

Exhibit A

Description of Property

Parcel 029-0-0-13 in Pulaski County, KY.

EXHIBIT B

PREMISES

PID	Name	Address	City	State	Zip	Screenshot
029-0-0-13	David B & Judy A Coner	2836 E 150 South	Franklin	IN	46131	Subject Property
029-5-0-02	Lester & Patricia Anne Swafford	430 Lanetown Rd	Nancy	KY	42544	
29-5-0-01	Michael & Christy Fox	488 Porter Creek Rd	Nancy	KY	42544	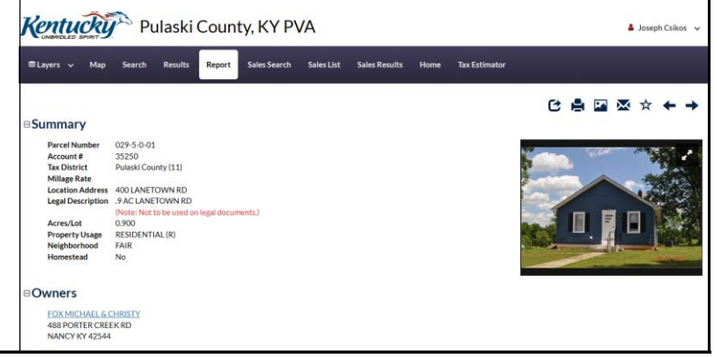

029-0-0-27.9	Christopher R. & Deann Cross	407 Lanetown Rd	Nancy	KY	42544	
029-0-0-27.1	Jackie Henderson	436 Sievers Rd	Nancy	KY	42544	

029-0-0-27.6	Crockett Anna Lucille Rev Liv TR	335 Lanetown Rd	Nancy	KY	42544	
029-0-0-8.1	Rachel & Michael Taylor	301 Lanetown Rd	Nancy	KY	42544	

029-3-1-30	James David VanHook	64 Grand Cir	Somerset	KY	42503	Pulaski County, KY PVA Joseph Csikos Search Layers Map Search Results Report Sales Search Sales List Sales Results Home Tax Estimator **Summary** Parcel Number 029-3-1-60 Account # 21942 Tax District Pulaski County (11) Millage Rate Location Address Legal Description LT 21 KY AFFORDABLE PROP .63 AC (Note: Not to be used on legal documents.) Acres/Lot 1.000 Property Usage RESIDENTIAL (R) Neighborhood FAIR Homestead No **Owners** VANHOOK JAMES DAVID 64 GRAND CIR SOMERSET KY 42503
029-3-1-31	James David VanHook	64 Grand Cir	Somerset	KY	42503	Pulaski County, KY PVA Joseph Csikos Search Layers Map Search Results Report Sales Search Sales List Sales Results Home Tax Estimator **Summary** Parcel Number 029-3-1-61 Account # 23242 Tax District Pulaski County (11) Millage Rate Location Address Legal Description LT 20 KY AFFORDABLE PROP .53 AC (Note: Not to be used on legal documents.) Acres/Lot 1.000 Property Usage RESIDENTIAL (R) Neighborhood FAIR Homestead No **Owners** VANHOOK JAMES DAVID 64 GRAND CIR SOMERSET KY 42503

029-3-1-62	James David VanHook	64 Grand Cir	Somerset	KY	42503	
029-3-1-63	James David VanHook	64 Grand Cir	Somerset	KY	42503	
029-3-1-64	James David VanHook	64 Grand Cir	Somerset	KY	42503	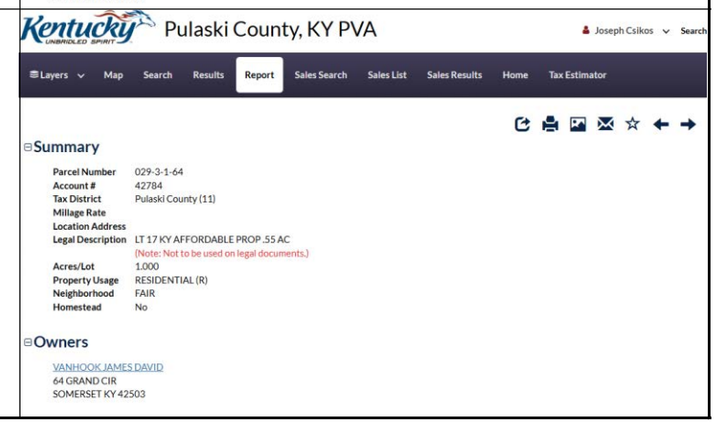

029-3-1-65	James David VanHook	64 Grand Cir	Somerset	KY	42503

029-3-1-66	James David VanHook	64 Grand Cir	Somerset	KY	42503

029-3-1-67	James David VanHook	64 Grand Cir	Somerset	KY	42503

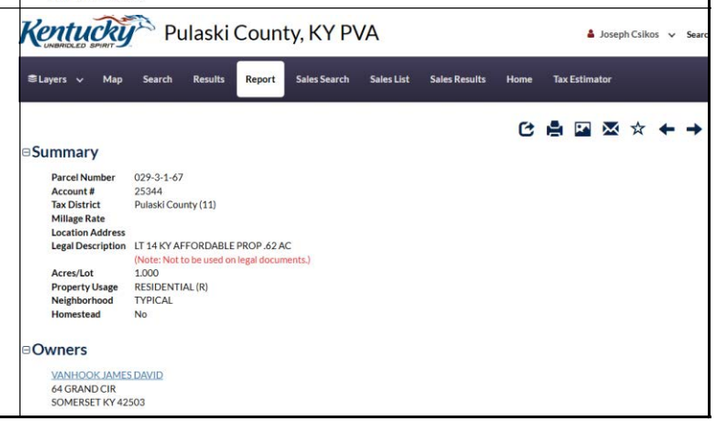

029-3-1-98	James David VanHook	64 Grand Cir	Somerset	KY	42503	Kentucky UNBRIDLED SPIRIT Pulaski County, KY PVA Joseph Csikos Search Layers Map Search Results Report Sales Search Sales List Sales Results Home Tax Estimator **Summary** Parcel Number 029-3-1-68 Account # 41547 Tax District Pulaski County (11) Millage Rate Location Address Legal Description LT 13 KY AFFORDABLE PROP .54 AC (Note: Not to be used on legal documents.) Acres/Lot 1.000 Property Usage RESIDENTIAL (R) Neighborhood TYPICAL Homestead No **Owners** VANHOOK JAMES DAVID 64 GRAND CIR SOMERSET KY 42503
029-3-1-69	James David VanHook	64 Grand Cir	Somerset	KY	42503	Kentucky UNBRIDLED SPIRIT Pulaski County, KY PVA Joseph Csikos Search Layers Map Search Results Report Sales Search Sales List Sales Results Home Tax Estimator **Summary** Parcel Number 029-3-1-69 Account # 13769 Tax District Pulaski County (11) Millage Rate Location Address Legal Description LT 12 KY AFFORDABLE PROP .56 AC (Note: Not to be used on legal documents.) Acres/Lot 1.000 Property Usage RESIDENTIAL (R) Neighborhood FAIR Homestead No **Owners** VANHOOK JAMES DAVID 64 GRAND CIR SOMERSET KY 42503
029-3-1-70	James David VanHook	64 Grand Cir	Somerset	KY	42503	Kentucky UNBRIDLED SPIRIT Pulaski County, KY PVA Joseph Csikos Search Layers Map Search Results Report Sales Search Sales List Sales Results Home Tax Estimator **Summary** Parcel Number 029-3-1-70 Account # 11523 Tax District Pulaski County (11) Millage Rate Location Address Legal Description LT 11 KY AFFORDABLE PROP .52 AC (Note: Not to be used on legal documents.) Acres/Lot 1.000 Property Usage RESIDENTIAL (R) Neighborhood FAIR Homestead No **Owners** VANHOOK JAMES DAVID 64 GRAND CIR SOMERSET KY 42503

029-3-1-71	James David VanHook	64 Grand Cir	Somerset	KY	42503	Kentucky UNBRIDLED SPIRIT Pulaski County, KY PVA Joseph Csikos Search Layers Map Search Results Report Sales Search Sales List Sales Results Home Tax Estimator Summary Parcel Number 029-3-1-71 Account # 39981 Tax District Pulaski County (11) Millage Rate Location Address Legal Description LT 10 KY AFFORDABLE PROP .50 AC (Note: Not to be used on legal documents.) Acres/Lot 1.000 Property Usage RESIDENTIAL (R) Neighborhood FAIR Homestead No Owners VANHOOK JAMES DAVID 64 GRAND CIR SOMERSET KY 42503
029-3-1-72	James David VanHook	64 Grand Cir	Somerset	KY	42503	Kentucky UNBRIDLED SPIRIT Pulaski County, KY PVA Joseph Csikos Search Layers Map Search Results Report Sales Search Sales List Sales Results Home Tax Estimator Summary Parcel Number 029-3-1-72 Account # 22975 Tax District Pulaski County (11) Millage Rate Location Address Legal Description LT 9 KY AFFORDABLE PROP .58 AC (Note: Not to be used on legal documents.) Acres/Lot 1.000 Property Usage RESIDENTIAL (R) Neighborhood FAIR Homestead No Owners VANHOOK JAMES DAVID 64 GRAND CIR SOMERSET KY 42503
029-3-1-73	James David VanHook	64 Grand Cir	Somerset	KY	42503	Kentucky UNBRIDLED SPIRIT Pulaski County, KY PVA Joseph Csikos Search Layers Map Search Results Report Sales Search Sales List Sales Results Home Tax Estimator Summary Parcel Number 029-3-1-73 Account # 22242 Tax District Pulaski County (11) Millage Rate Location Address Legal Description LT 8 KY AFFORDABLE PROP .58 AC (Note: Not to be used on legal documents.) Acres/Lot 1.000 Property Usage RESIDENTIAL (R) Neighborhood FAIR Homestead No Owners VANHOOK JAMES DAVID 64 GRAND CIR SOMERSET KY 42503

029-3-1-74	James David VanHook	64 Grand Cir	Somerset	KY	42503

Kentucky UNBRIDLED SPIRIT Pulaski County, KY PVA

Joseph Csikos Searc

Layers Map Search Results Report Sales Search Sales List Sales Results Home Tax Estimator

Summary

Parcel Number	029-3-1-74
Account #	15690
Tax District	Pulaski County (11)
Millage Rate	
Location Address	
Legal Description	LT 7 KY AFFORDABLE PROP .65 AC (Note: Not to be used on legal documents.)
Acres/Lot	1.000
Property Usage	RESIDENTIAL (R)
Neighborhood	FAIR
Homestead	No

Owners

VANHOOK JAMES DAVID
64 GRAND CIR
SOMERSET KY 42503

029-3-1-75	James David VanHook	64 Grand Cir	Somerset	KY	42503

Kentucky UNBRIDLED SPIRIT Pulaski County, KY PVA

Joseph Csikos Searc

Layers Map Search Results Report Sales Search Sales List Sales Results Home Tax Estimator

Summary

Parcel Number	029-3-1-75
Account #	41765
Tax District	Pulaski County (11)
Millage Rate	
Location Address	
Legal Description	LT 6 KY AFFORDABLE PROP .57 AC (Note: Not to be used on legal documents.)
Acres/Lot	1.000
Property Usage	RESIDENTIAL (R)
Neighborhood	FAIR
Homestead	No

Owners

VANHOOK JAMES DAVID
64 GRAND CIR
SOMERSET KY 42503

029-3-1-76	James David VanHook	64 Grand Cir	Somerset	KY	42503

Kentucky UNBRIDLED SPIRIT Pulaski County, KY PVA

Joseph Csikos Search

Layers Map Search Results Report Sales Search Sales List Sales Results Home Tax Estimator

Summary

Parcel Number	029-3-1-76
Account #	35801
Tax District	Pulaski County (11)
Millage Rate	
Location Address	
Legal Description	LT 5 KY AFFORDABLE PROP .57 AC (Note: Not to be used on legal documents.)
Acres/Lot	1.000
Property Usage	RESIDENTIAL (R)
Neighborhood	FAIR
Homestead	No

Owners

VANHOOK JAMES DAVID
64 GRAND CIR
SOMERSET KY 42503

029-3-1-77	James David VanHook	64 Grand Cir	Somerset	KY	42503	Kentucky UNBRIDLED SPIRIT Pulaski County, KY PVA Joseph Csikos Sear Layers Map Search Results Report Sales Search Sales List Sales Results Home Tax Estimator Summary Parcel Number 029-3-1-77 Account # 39301 Tax District Pulaski County (11) Millage Rate Location Address Legal Description LT 4 KY AFFORDABLE PROP .57 AC (Note: Not to be used on legal documents.) Acres/Lot 1.000 Property Usage RESIDENTIAL (R) Neighborhood FAIR Homestead No Owners VANHOOK JAMES DAVID 64 GRAND CIR SOMERSET KY 42503
029-3-1-78	James David VanHook	64 Grand Cir	Somerset	KY	42503	Kentucky UNBRIDLED SPIRIT Pulaski County, KY PVA Joseph Csikos Sear Layers Map Search Results Report Sales Search Sales List Sales Results Home Tax Estimator Summary Parcel Number 029-3-1-78 Account # 22960 Tax District Pulaski County (11) Millage Rate Location Address Legal Description LT 3 KY AFFORDABLE PROP .62 AC (Note: Not to be used on legal documents.) Acres/Lot 1.000 Property Usage RESIDENTIAL (R) Neighborhood FAIR Homestead No Owners VANHOOK JAMES DAVID 64 GRAND CIR SOMERSET KY 42503
029-3-1-79	James David VanHook	64 Grand Cir	Somerset	KY	42503	Kentucky UNBRIDLED SPIRIT Pulaski County, KY PVA Joseph Csikos Sear Layers Map Search Results Report Sales Search Sales List Sales Results Home Tax Estimator Summary Parcel Number 029-3-1-79 Account # 20589 Tax District Pulaski County (11) Millage Rate Location Address Legal Description LT 2 KY AFFORDABLE PROP .53 AC (Note: Not to be used on legal documents.) Acres/Lot 1.000 Property Usage RESIDENTIAL (R) Neighborhood FAIR Homestead No Owners VANHOOK JAMES DAVID 64 GRAND CIR SOMERSET KY 42503

029-3-1-80	James David VanHook	64 Grand Cir	Somerset	KY	42503
029-6-0-11	Claunch Fam IRR TR	4228 W Hwy 80	Somerset	KY	42503
029-6-0-03.3	Pauls Car Wash West, LLC	402 Emery St	Ferguson	KY	42533

Kentucky UNBRIDLED SPIRIT Pulaski County, KY PVA

Joseph Csikos Search

Layers Map Search Results Report Sales Search Sales List Sales Results Home Tax Estimator

Summary

Parcel Number	029-3-1-80
Account #	11810
Tax District	Pulaski County (11)
Millage Rate	
Location Address	
Legal Description	LT 1 KY AFFORDABLE PROP .53 AC (Note: Not to be used on legal documents.)
Acres/Lot	1.000
Property Usage	RESIDENTIAL (R)
Neighborhood	FAIR
Homestead	No

Owners

VANHOOK JAMES DAVID
64 GRAND CIR
SOMERSET KY 42503

Kentucky UNBRIDLED SPIRIT Pulaski County, KY PVA

Joseph Csikos Search

Layers Map Search Results Report Sales Search Sales List Sales Results Home Tax Estimator

Summary

Parcel Number	029-6-0-11
Account #	45568
Tax District	Pulaski County (11)
Millage Rate	
Location Address	
Legal Description	4.48 AC W HWY 80 (Note: Not to be used on legal documents.)
Acres/Lot	4.480
Property Usage	RESIDENTIAL (R)
Neighborhood	FAIR
Homestead	No

Owners

CLAUNCH FAM IRR TR
4228 W HWY 80
SOMERSET KY 42503

Kentucky UNBRIDLED SPIRIT Pulaski County, KY PVA

Joseph Csikos Search

Layers Map Search Results Report Sales Search Sales List Sales Results Home Tax Estimator

Summary

Parcel Number	029-6-0-03.3
Account #	56043
Tax District	Pulaski County (11)
Millage Rate	
Location Address	
Legal Description	TR 1 JAMES H OAKES BNDRY SUR 17.35 AC (Note: Not to be used on legal documents.)
Acres/Lot	17.350
Property Usage	FARM (F)
Neighborhood	FAIR
Homestead	No

Owners

PAULS CAR WASH WEST LLC
402 EMERY ST
FERGUSON KY 42533

029-6-0-13	Timothy Haydon & Jonathan Fox C/O Cindy Fox	562 Lanetown Rd	Nancy	KY	42544	 Kentucky UNBRIDLED SPIRIT Pulaski County, KY PVA Joseph Csikos Search Layers Map Search Results Report Sales Search Sales List Sales Results Home Tax Estimator Summary Parcel Number 029-6-0-13 Account # 9598 Tax District Pulaski County (11) Millage Rate Location Address 780 LANETOWN RD Legal Description TR 1 WESLEY FOX BNDRY SUR 45.83 AC (Note: Not to be used on legal documents.) Acres/Lot 45.830 Property Usage FARM (F) Neighborhood FAIR Homestead No Owners FOX TIMOTHY HAYDON & JONATHAN C/O CINDY FOX 562 LANETOWN RD NANCY KY 42544
029-5-0-04	Richard & Barbara Fox	482 Lanetown Rd	Nancy	KY	42544	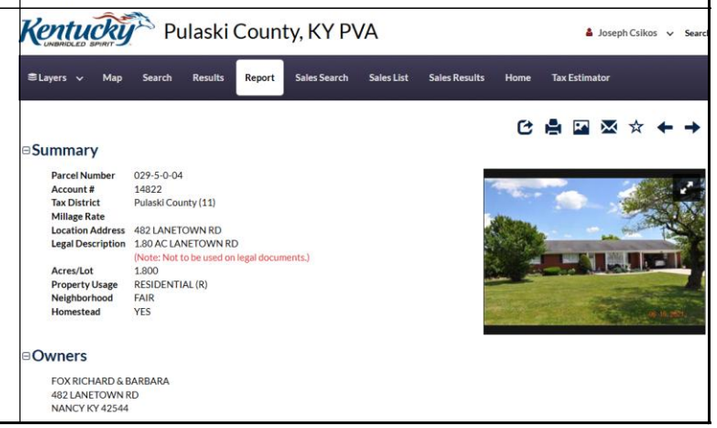 Kentucky UNBRIDLED SPIRIT Pulaski County, KY PVA Joseph Csikos Search Layers Map Search Results Report Sales Search Sales List Sales Results Home Tax Estimator Summary Parcel Number 029-5-0-04 Account # 14822 Tax District Pulaski County (11) Millage Rate Location Address 482 LANETOWN RD Legal Description 1.80 AC LANETOWN RD (Note: Not to be used on legal documents.) Acres/Lot 1.800 Property Usage RESIDENTIAL (R) Neighborhood FAIR Homestead YES Owners FOX RICHARD & BARBARA 482 LANETOWN RD NANCY KY 42544

029-5-0-03.1	Eric D Fox	468 Lanetown Rd	Nancy	KY	42544

ClarkQuinn

www.clarkquinnlaw.com

Russell L. Brown
Attorney at Law
rbrown@clarkquinnlaw.com

320 N. Meridian St., Ste. 1100
Indianapolis, IN 46204
(317) 637-1321 main
(317) 687-2344 fax

December 9, 2025

Notice of Proposed Construction of
Wireless Communications Facility
Site Name: Nancy

Cellco Partnership, d/b/a Verizon Wireless and APC Towers propose to construct a wireless communications facility on a site located at 376 Lanetown Road; Nancy KY 42544 (North Latitude: (37° 04' 24.78"), West Longitude (84° 44' 30.23"). The proposed facility will include a 195-foot-tall self-supporting tower, plus a 4-foot lightning arrestor and related ground facilities. This facility is needed to provide improved coverage for wireless communications in the area.

This notice is being sent to you because the County Property Valuation Administrator's records indicate that you may own property that is within a 500' radius of the proposed tower site or contiguous property on which the tower is to be constructed. You have a right to submit testimony to the Kentucky Public Service Commission ("PSC"), either in writing or to request intervention in the PSC's proceedings on the application. You may contact PSC for additional information concerning this matter at: Kentucky Public Service Commission, Executive Director, 211 Sower Boulevard, PO Box 615, Frankfort Kentucky 40602. Please refer to docket number 2025-00388 in any correspondence sent in connection with this matter.

We have attached a map showing the site location for the proposed tower. Co-Applicant's radio frequency engineers assisted in selecting the proposed site for the facility, and they have determined it is the proper location and elevation needed to provide quality service to wireless customers in the area. Please feel free to contact us at 317-637-1321 if you have any comments or questions about this proposal.

Sincerely,

Russell L. Brown
Attorney for Applicant

RLB/jmc
Enclosure

LOCATION MAPS

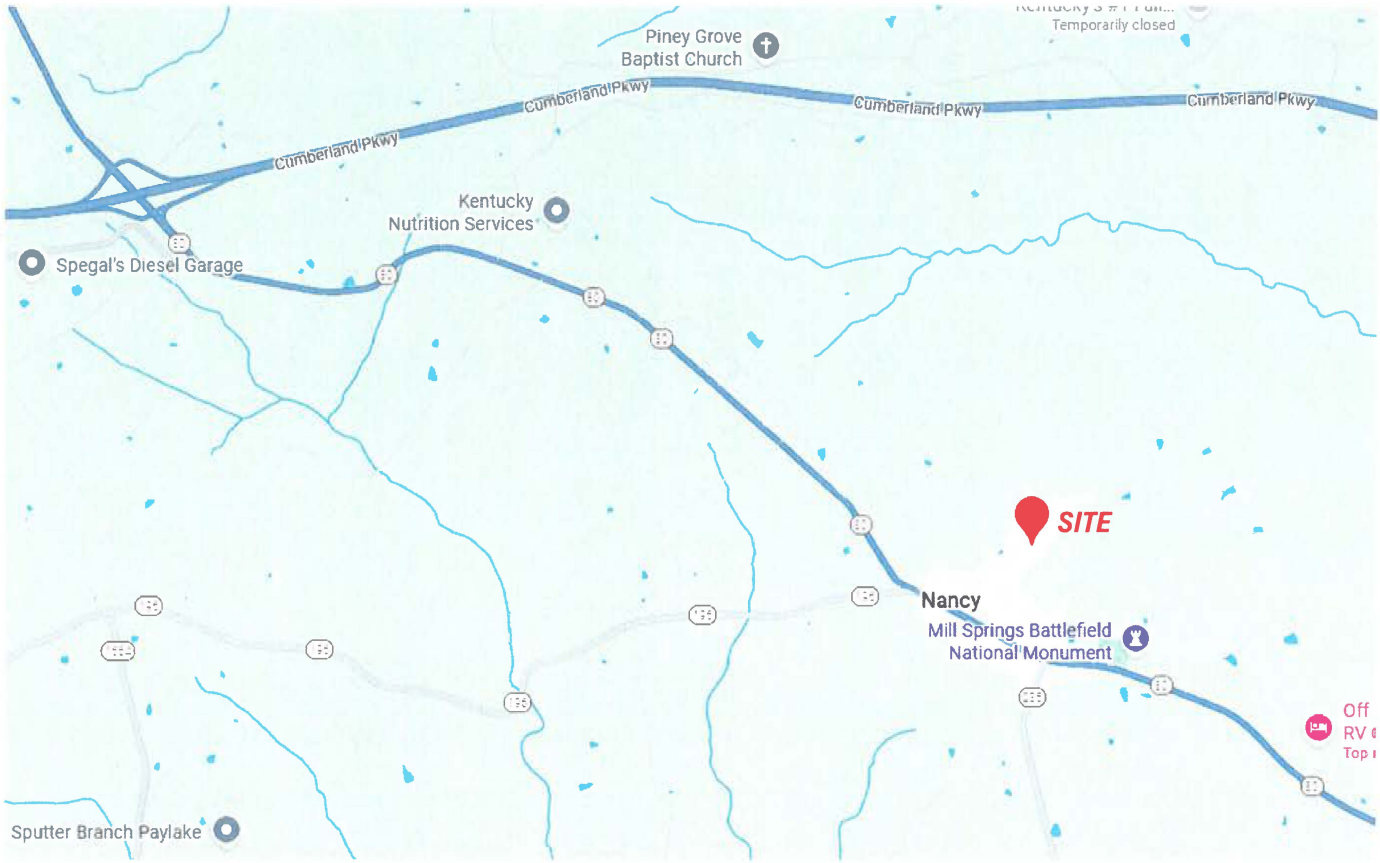

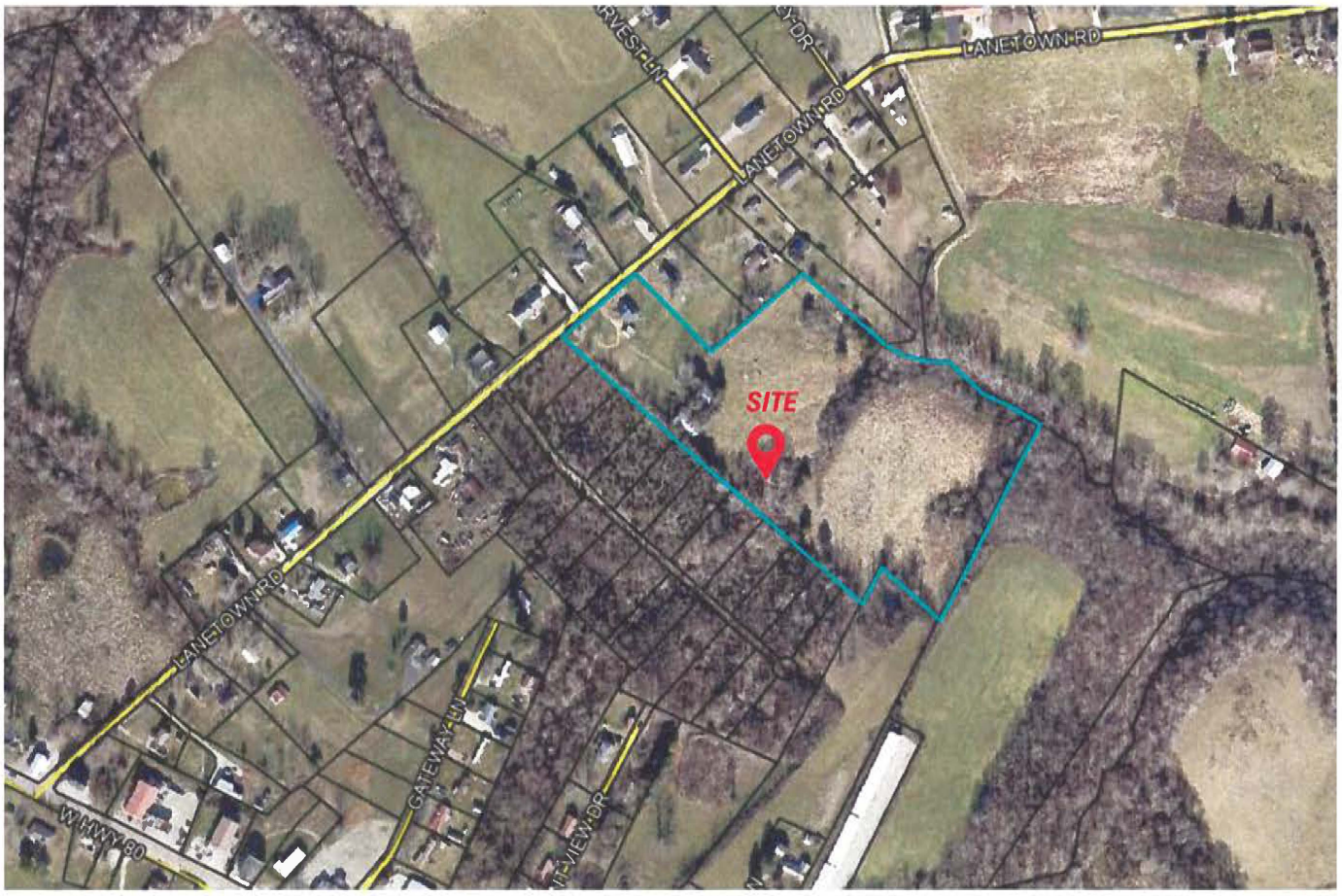

ClarkQuinn
Clark, Quinn, Moses, Scott & Grahn, LLP

CERTIFIED MAIL®

9589 0710 5270 1450 3453 11

FIRST-CLASS

US POSTAGE PITNEY BOWES

ZIP 46204
02 7H
0006035028

$ 010.44⁰
DEC 09 2025

David B. & Judy A. Coner
2836 E 150 South
Franklin, IN 46131

ClarkQuinn
Clark, Quinn, Moses, Scott & Grahn, LLP

PLACE STICKER AT TOP OF ENVELOPE TO THE RIGHT
OF THE RETURN ADDRESS, FOLD AT DOTTED LINE

CERTIFIED MAIL®

9589 0710 5270 1450 3453 28

FIRST-CLASS

US POSTAGE PITNEY BOWES

ZIP 46204
02 7H
0006035028

$ 010.44⁰
DEC 09 2025

Lester & Patricia Anne Swafford
430 Lanetown Road
Nancy, KY 42544

ClarkQuinn
Clark, Quinn, Moses, Scott & Grahn, LLP

PLACE STICKER AT TOP OF ENVELOPE TO THE RIGHT
OF THE RETURN ADDRESS, FOLD AT DOTTED LINE

CERTIFIED MAIL®

9589 0710 5270 1450 3453 35

FIRST-CLASS

US POSTAGE PITNEY BOWES

ZIP 46204
02 7H
0006035028

$ 010.44⁰
DEC 09 2025

Michael & Christy Fox
488 Porter Creek Road
Nancy, KY 42544

ClarkQuinn
Clark, Quinn, Moses, Scott & Grahn, LLP

CERTIFIED MAIL®

9589 0710 5270 1450 3453 42

FIRST-CLASS

US POSTAGE IMI PITNEY BOWES

ZIP 46204
02 7H
0006035028

$ 010.44⁰
DEC 09 2025

Christopher R. & Deann Cross
407 Lanetown Road
Nancy, KY 42544

ClarkQuinn
Clark, Quinn, Moses, Scott & Grahn, LLP

PLACE STICKER AT TOP OF ENVELOPE
OF THE RETURN ADDRESS, FOLD AT DOTTED LINE

CERTIFIED MAIL®

9589 0710 5270 1450 3453 59

FIRST-CLASS

US POSTAGE IMI PITNEY BOWES

ZIP 46204
02 7H
0006035028

$ 010.44⁰
DEC 09 2025

Jackie Henderson
436 Sievers Road
Nancy, KY 42544

ClarkQuinn
Clark, Quinn, Moses, Scott & Grahn, LLP

PLACE STICKER AT TOP OF ENVELOPE TO THE RIGHT
OF THE RETURN ADDRESS, FOLD AT DOTTED LINE

CERTIFIED MAIL®

9589 0710 5270 1450 3453 66

FIRST-CLASS

US POSTAGE IMI PITNEY BOWES

ZIP 46204
02 7H
0006035028

$ 010.44⁰
DEC 09 2025

Crockett Anna Lucille
Rev Living Tr
335 Lanetown Road
Nancy, KY 42544

ClarkQuinn
Clark, Quinn, Moses, Scott & Grahn, LLP

CERTIFIED MAIL®

9589 0710 5270 1450 3453 73

FIRST-CLASS

US POSTAGE IMI PITNEY BOWES

ZIP 46204
02 7H
0006035028

$ 010.44⁰
DEC 09 2025

Rachel & Michael Taylor
301 Lanetown Road
Nancy, KY 42544

ClarkQuinn
Clark, Quinn, Moses, Scott & Grahn, LLP

PLACE STICKER AT TOP OF ENVELOPE TO THE RIGHT
OF THE RETURN ADDRESS, FOLD AT DOTTED LINE

CERTIFIED MAIL®

9589 0710 5270 1450 3453 80

FIRST-CLASS

US POSTAGE IMI PITNEY BOWES

ZIP 46204
02 7H
0006035028

$ 010.44⁰
DEC 09 2025

James David VanHook
64 Grand Circle
Somerset, KY 42503

ClarkQuinn
Clark, Quinn, Moses, Scott & Grahn, LLP

PLACE STICKER AT TOP OF ENVELOPE TO THE RIGHT
OF THE RETURN ADDRESS, FOLD AT DOTTED LINE

CERTIFIED MAIL®

9589 0710 5270 1450 3453 97

FIRST-CLASS

US POSTAGE IMI PITNEY BOWES

ZIP 46204
02 7H
0006035028

$ 010.44⁰
DEC 09 2025

Claunch Fam IRR Tr
4228 W Hwy 80
Somerset, KY 42503

ClarkQuinn
Clark, Quinn, Moses, Scott & Grahn, LLP

CERTIFIED MAIL®

9589 0710 5270 1450 3454 03

FIRST-CLASS

US POSTAGE IMI PITNEY BOWES

ZIP 46204
02 7H
0006035028

$ 010.44⁰
DEC 09 2025

Pauls Car Wash West, LLC
402 Emery Street
Ferguson, KY 42533

ClarkQuinn
Clark, Quinn, Moses, Scott & Grahn, LLP

PLACE STICKER AT TOP OF ENVELOPE TO THE RIGHT
OF THE RETURN ADDRESS, FOLD AT DOTTED LINE

CERTIFIED MAIL®

9589 0710 5270 1450 3454 10

FIRST-CLASS

US POSTAGE IMI PITNEY BOWES

ZIP 46204
02 7H
0006035028

$ 010.44⁰
DEC 09 2025

Timothy Haydon & Jonathan Fox
c/o Cindy Fox
562 Lanetown Road
Nancy, KY 42544

ClarkQuinn
Clark, Quinn, Moses, Scott & Grahn, LLP

PLACE STICKER AT TOP OF ENVELOPE TO THE RIGHT
OF THE RETURN ADDRESS, FOLD AT DOTTED LINE

CERTIFIED MAIL®

9589 0710 5270 1450 3454 27

FIRST-CLASS

US POSTAGE IMI PITNEY BOWES

ZIP 46204
02 7H
0006035028

$ 010.44⁰
DEC 09 2025

Richard & Barbara Fox
482 Lanetown Road
Nancy, KY 42544

ClarkQuinn
Clark, Quinn, Moses, Scott & Grahn, LLP

PLACE STICKER AT TOP OF ENVELOPE TO THE RIGHT
OF THE RETURN ADDRESS, FOLD AT DOTTED LINE

CERTIFIED MAIL®

9589 0710 5270 1450 3454 34

FIRST-CLASS

US POSTAGE IMI PITNEY BOWES
ZIP 46204
02 7H
0006035028
$ 010.44⁰
DEC 09 2025

Erin D. Fox
468 Lanetown Road
Nancy, KY 42544

SENDER: *COMPLETE THIS SECTION*

- Complete items 1, 2, and 3.
- Print your name and address on the reverse so that we can return the card to you.
- Attach this card to the back of the mailpiece, or on the front if space permits.

1. Article Addressed to:

David B. & Judy A. Coner
2836 E 150 South
Franklin, IN 46131

9590 9402 9112 4225 4786 32

2. Article Number *(Transfer from service label)*

9589 0710 5270 1450 3453 11

COMPLETE THIS SECTION ON DELIVERY

A. Signature

X

☑ Agent
☐ Addressee

B. Received by *(Printed Name)*

C. Date of Delivery
12-13

D. Is delivery address different from item 1? ☐ Yes
If YES, enter delivery address below: ☑ No

3. Service Type

- ☐ Adult Signature
- ☐ Adult Signature Restricted Delivery
- ☐ Certified Mail®
- ☐ Certified Mail Restricted Delivery
- ☐ Collect on Delivery
- ☐ Collect on Delivery Restricted Delivery
- ☐ Insured Mail
- Mail Restricted Delivery
- 00)
- ☐ Priority Mail Express®
- ☐ Registered Mail™
- ☐ Registered Mail Restricted Delivery
- ☐ Signature Confirmation™
- ☐ Signature Confirmation Restricted Delivery

PS Form 3811, July 2020 PSN 7530-02-000-9053 Domestic Return Receipt

SENDER: *COMPLETE THIS SECTION*

- Complete items 1, 2, and 3.
- Print your name and address on the reverse so that we can return the card to you.
- Attach this card to the back of the mailpiece, or on the front if space permits.

1. Article Addressed to:

Jackie Henderson
436 Sievers Road
Nancy, KY 42544

9590 9402 9112 4225 4785 95

2. Article Number *(Transfer from service label)*

9589 0710 5270 1450 3453 59

PS Form 3811, July 2020 PSN 7530-02-000-9053

COMPLETE THIS SECTION ON DELIVERY

A. Signature
X Jackie Henderson
☐ Agent
☐ Addressee

B. Received by *(Printed Name)* JACKIE Henderson
C. Date of Delivery

D. Is delivery address different from item 1? ☐ Yes
If YES, enter delivery address below: ☐ No

USPS DEC 16 2025 NANCY KY

3. Service Type
☐ Adult Signature
☐ Adult Signature Restricted Delivery
☐ Certified Mail®
☐ Certified Mail Restricted Delivery
☐ Collect on Delivery
☐ Collect on Delivery Restricted Delivery
☐ Insured Mail
☐ Insured Mail Restricted Delivery (over $500)
☐ Priority Mail Express®
☐ Registered Mail™
☐ Registered Mail Restricted Delivery
☐ Signature Confirmation™
☐ Signature Confirmation Restricted Delivery

Domestic Return Receipt

SENDER: *COMPLETE THIS SECTION*

- Complete items 1, 2, and 3.
- Print your name and address on the reverse so that we can return the card to you.
- Attach this card to the back of the mailpiece, or on the front if space permits.

1. Article Addressed to:

Lester & Patricia Anne Swafford
430 Lanetown Road
Nancy, KY 42544

9590 9402 9112 4225 4786 25

2. Article Number *(Transfer from service label)*

9589 0710 5270 1450 3453 28

PS Form 3811, July 2020 PSN 7530-02-000-9053

COMPLETE THIS SECTION ON DELIVERY

A. Signature
X Lester Swafford
☐ Agent
☐ Addressee

B. Received by *(Printed Name)* LESTER SWAFFORD
C. Date of Delivery

D. Is delivery address different from item 1? ☐ Yes
If YES, enter delivery address below: ☐ No

USPS DEC 16 2025 NANCY KY

3. Service Type
☐ Adult Signature
☐ Adult Signature Restricted Delivery
☐ Certified Mail®
☐ Certified Mail Restricted Delivery
☐ Collect on Delivery
☐ Collect on Delivery Restricted Delivery
☐ Insured Mail
☐ Insured Mail Restricted Delivery (over $500)
☐ Priority Mail Express®
☐ Registered Mail™
☐ Registered Mail Restricted Delivery
☐ Signature Confirmation™
☐ Signature Confirmation Restricted Delivery

Domestic Return Receipt

SENDER: *COMPLETE THIS SECTION*

- Complete items 1, 2, and 3.
- Print your name and address on the reverse so that we can return the card to you.
- Attach this card to the back of the mailpiece, or on the front if space permits.

1. Article Addressed to:

James David VanHook
64 Grand Circle
Somerset, KY 42503

9590 9402 9112 4225 4776 11

2. Article Number *(Transfer from service label)*

9589 0710 5270 1450 3453 80

PS Form 3811, July 2020 PSN 7530-02-000-9053

COMPLETE THIS SECTION ON DELIVERY

A. Signature
X
☐ Agent
☐ Addressee

B. Received by *(Printed Name)* James D VanHook
C. Date of Delivery

D. Is delivery address different from item 1? ☐ Yes
If YES, enter delivery address below: ☐ No

3. Service Type
☐ Adult Signature
☐ Adult Signature Restricted Delivery
☐ Certified Mail®
☐ Certified Mail Restricted Delivery
☐ Collect on Delivery
☐ Collect on Delivery Restricted Delivery
☐ Insured Mail
☐ Insured Mail Restricted Delivery (over $500)
☐ Priority Mail Express®
☐ Registered Mail™
☐ Registered Mail Restricted Delivery
☐ Signature Confirmation™
☐ Signature Confirmation Restricted Delivery

Domestic Return Receipt

SENDER: *COMPLETE THIS SECTION*

- Complete items 1, 2, and 3.
- Print your name and address on the reverse so that we can return the card to you.
- Attach this card to the back of the mailpiece, or on the front if space permits.

1. Article Addressed to:

Claunch Fam IRR Tr
4228 W Hwy 80
Somerset, KY 42503

9590 9402 9112 4225 4775 98

2. Article Number *(Transfer from service label)*

9589 0710 5270 1450 3453 97

COMPLETE THIS SECTION ON DELIVERY

A. Signature
X Rosemary Brey
☐ Agent
☐ Addressee

B. Received by *(Printed Name)*: Rosemary Brey
C. Date of Delivery: 12/15/25

D. Is delivery address different from item 1? ☐ Yes
If YES, enter delivery address below: ☐ No

3. Service Type
☐ Adult Signature
☐ Adult Signature Restricted Delivery
☐ Certified Mail®
☐ Certified Mail Restricted Delivery
☐ Collect on Delivery
☐ Collect on Delivery Restricted Delivery
☐ Insured Mail
☐ Priority Mail Express®
☐ Registered Mail™
☐ Registered Mail Restricte Delivery
☐ Signature Confirmation™
☐ Signature Confirmation Restricted Delivery

PS Form 3811, July 2020 PSN 7530-02-000-9053 — Domestic Return Receipt

SENDER: *COMPLETE THIS SECTION*

- Complete items 1, 2, and 3.
- Print your name and address on the reverse so that we can return the card to you.
- Attach this card to the back of the mailpiece, or on the front if space permits.

1. Article Addressed to:

Richard & Barbara Fox
482 Lanetown Road
Nancy, KY 42544

9590 9402 9112 4225 4775 67

2. Article Number *(Transfer from service label)*

9589 0710 5270 1450 3454 27

COMPLETE THIS SECTION ON DELIVERY

A. Signature
X Barbara Fox
☐ Agent
☐ Addressee

B. Received by *(Printed Name)*: Barbara Fox
C. Date of Delivery: 12/13/25

D. Is delivery address different from item 1? ☐ Yes
If YES, enter delivery address below: ☐ No

3. Service Type
☐ Adult Signature
☐ Adult Signature Restricted Delivery
☐ Certified Mail®
☐ Certified Mail Restricted Delivery
☐ Collect on Delivery
☐ Collect on Delivery Restricted Delivery
☐ Insured Mail
☐ Priority Mail Express®
☐ Registered Mail™
☐ Registered Mail Restricted Delivery
☐ Signature Confirmation™
☐ Signature Confirmation Restricted Delivery

PS Form 3811, July 2020 PSN 7530-02-000-9053 — Domestic Return Receipt

SENDER: *COMPLETE THIS SECTION*

- Complete items 1, 2, and 3.
- Print your name and address on the reverse so that we can return the card to you.
- Attach this card to the back of the mailpiece, or on the front if space permits.

1. Article Addressed to:

Erin D. Fox
468 Lanetown Road
Nancy, KY 42544

9590 9402 9112 4225 4775 50

2. Article Number *(Transfer from service label)*

9589 0710 5270 1450 3454 34

COMPLETE THIS SECTION ON DELIVERY

A. Signature
X
☐ Agent
☐ Addressee

B. Received by *(Printed Name)*
C. Date of Delivery: 12/13/25

D. Is delivery address different from item 1? ☐ Yes
If YES, enter delivery address below: ☐ No

3. Service Type
☐ Adult Signature
☐ Adult Signature Restricted Delivery
☐ Certified Mail®
☐ Certified Mail Restricted Delivery
☐ Collect on Delivery
☐ Collect on Delivery Restricted Delivery
☐ Insured Mail
☐ Priority Mail Express®
☐ Registered Mail™
☐ Registered Mail Restricted Delivery
☐ Signature Confirmation™
☐ Signature Confirmation Restricted Delivery

PS Form 3811, July 2020 PSN 7530-02-000-9053 — Domestic Return Receipt

SENDER: *COMPLETE THIS SECTION*

- Complete items 1, 2, and 3.
- Print your name and address on the reverse so that we can return the card to you.
- Attach this card to the back of the mailpiece, or on the front if space permits.

1. Article Addressed to:

Rachel & Michael Taylor
301 Lanetown Road
Nancy, KY 42544

9590 9402 9112 4225 4785 71

2. Article Number *(Transfer from service label)*

9589 0710 5270 1450 3453 73

COMPLETE THIS SECTION ON DELIVERY

A. Signature
X
☐ Agent
☐ Addressee

B. Received by *(Printed Name)*
C. Date of Delivery
12/15/25

D. Is delivery address different from item 1? ☐ Yes
If YES, enter delivery address below: ☐ No

3. Service Type
☐ Adult Signature
☐ Adult Signature Restricted Delivery
☐ Certified Mail®
☐ Certified Mail Restricted Delivery
☐ Collect on Delivery
☐ Collect on Delivery Restricted Delivery
☐ Insured Mail
☐ Priority Mail Express®
☐ Registered Mail™
☐ Registered Mail Restricted Delivery
☐ Signature Confirmation™
☐ Signature Confirmation Restricted Delivery

Mail Restricted Delivery
00)

PS Form 3811, July 2020 PSN 7530-02-000-9053 Domestic Return Receipt

SENDER: *COMPLETE THIS SECTION*

- Complete items 1, 2, and 3.
- Print your name and address on the reverse so that we can return the card to you.
- Attach this card to the back of the mailpiece, or on the front if space permits.

1. Article Addressed to:

Christopher R. & Deann Cross
407 Lanetown Road
Nancy, KY 42544

9590 9402 9112 4225 4786 01

2. Article Number *(Transfer from service label)*

9589 0710 5270 1450 3453 42

COMPLETE THIS SECTION ON DELIVERY

A. Signature
X
☐ Agent
☐ Addressee

B. Received by *(Printed Name)*
C. Date of Delivery

D. Is delivery address different from item 1? ☐ Yes
If YES, enter delivery address below: ☐ No

DEC 15 2025
NANCY KY

3. Service Type
☐ Adult Signature
☐ Adult Signature Restricted Delivery
☐ Certified Mail®
☐ Certified Mail Restricted Delivery
☐ Collect on Delivery
☐ Collect on Delivery Restricted Delivery
☐ Insured Mail
☐ Priority Mail Express®
☐ Registered Mail™
☐ Registered Mail Restricted Delivery
☐ Signature Confirmation™
☐ Signature Confirmation Restricted Delivery

Mail Restricted Delivery
00)

PS Form 3811, July 2020 PSN 7530-02-000-9053 Domestic Return Receipt

SENDER: *COMPLETE THIS SECTION*

- Complete items 1, 2, and 3.
- Print your name and address on the reverse so that we can return the card to you.
- Attach this card to the back of the mailpiece, or on the front if space permits.

1. Article Addressed to:

Pauls Car Wash West, LLC
402 Emery Street
Ferguson, KY 42533

9590 9402 9112 4225 4775 81

2. Article Number *(Transfer from service label)*

9589 0710 5270 1450 3454 03

COMPLETE THIS SECTION ON DELIVERY

A. Signature
X
☐ Agent
☐ Addressee

B. Received by *(Printed Name)*
C. Date of Delivery

D. Is delivery address different from item 1? ☐ Yes
If YES, enter delivery address below: ☐ No

3. Service Type
☐ Adult Signature
☐ Adult Signature Restricted Delivery
☐ Certified Mail®
☐ Certified Mail Restricted Delivery
☐ Collect on Delivery
☐ Collect on Delivery Restricted Delivery
☐ Insured Mail
☐ Priority Mail Express®
☐ Registered Mail™
☐ Registered Mail Restricted Delivery
☐ Signature Confirmation™
☐ Signature Confirmation Restricted Delivery

Mail Restricted Delivery
00)

PS Form 3811, July 2020 PSN 7530-02-000-9053 Domestic Return Receipt

SENDER: *COMPLETE THIS SECTION*

- Complete items 1, 2, and 3.
- Print your name and address on the reverse so that we can return the card to you.
- Attach this card to the back of the mailpiece, or on the front if space permits.

1. Article Addressed to:

Crockett Anna Lucille
Rev Living Tr
335 Lanetown Road
Nancy, KY 42544

9590 9402 9112 4225 4785 88

2. Article Number *(Transfer from service label)*

9589 0710 5270 1450 3453 66

COMPLETE THIS SECTION ON DELIVERY

A. Signature

X Lucille Crockett ☐ Agent ☐ Addressee

B. Received by *(Printed Name)* Lucille Crockett

C. Date of Delivery 12/13/25

D. Is delivery address different from item 1? ☐ Yes
If YES, enter delivery address below: ☐ No

3. Service Type
☐ Adult Signature
☐ Adult Signature Restricted Delivery
☐ Certified Mail®
☐ Certified Mail Restricted Delivery
☐ Collect on Delivery
☐ Collect on Delivery Restricted Delivery
☐ Insured Mail
Mail Restricted Delivery
00)
☐ Priority Mail Express®
☐ Registered Mail™
☐ Registered Mail Restricted Delivery
☐ Signature Confirmation™
☐ Signature Confirmation Restricted Delivery

PS Form 3811, July 2020 PSN 7530-02-000-9053 Domestic Return Receipt

SENDER: *COMPLETE THIS SECTION*

- Complete items 1, 2, and 3.
- Print your name and address on the reverse so that we can return the card to you.
- Attach this card to the back of the mailpiece, or on the front if space permits.

1. Article Addressed to:

Michael & Christy Fox
488 Porter Creek Road
Nancy, KY 42544

9590 9402 9112 4225 4786 18

2. Article Number *(Transfer from service label)*

9589 0710 5270 1450 3453 35

COMPLETE THIS SECTION ON DELIVERY

A. Signature

X ☐ Agent ☐ Addressee

B. Received by *(Printed Name)* Chrystal Seep

C. Date of Delivery

D. Is delivery address different from item 1? ☐ Yes
If YES, enter delivery address below: ☐ No

DEC 16 2025
NANCY

3. Service Type
☐ Adult Signature
☐ Adult Signature Restricted Delivery
☐ Certified Mail®
☐ Certified Mail Restricted Delivery
☐ Collect on Delivery
☐ Collect on Delivery Restricted Delivery
☐ Insured Mail
Mail Restricted Delivery
500)
☐ Priority Mail Express®
☐ Registered Mail™
☐ Registered Mail Restricted Delivery
☐ Signature Confirmation™
☐ Signature Confirmation Restricted Delivery

PS Form 3811, July 2020 PSN 7530-02-000-9053 Domestic Return Receipt

ClarkQuinn
Clark, Quinn, Moses, Scott & Grahn, LLP

PLACE STICKER AT TOP OF ENVELOPE TO THE RIGHT
OF THE RETURN ADDRESS, FOLD AT DOTTED LINE

CERTIFIED MAIL®

INDIANAPOLIS IN 460
10 DEC 2025 PM 3 L

FIRST-CLASS

US POSTAGE (M) PITNEY BOWES
ZIP 46204
02 7H
0006035028
$ 010.44⁰
DEC 09 2025

9589 0710 5270 1450 3454 10

12/23

Timothy Haydon & Jonathan Fox
c/o Cindy Fox
562 Lanetown Road
Nancy, KY 42544

NIXIE 372 EE 1 7201/22/26
RETURN TO SENDER
NOT DELIVERABLE AS ADDRESSED
UNABLE TO FORWARD
MANUAL PROC REQ *1912-02232-10-44

ClarkQuinn

www.clarkquinnlaw.com

Russell L. Brown
Attorney at Law
rbrown@clarkquinnlaw.com

320 N. Meridian St., Ste. 1100
Indianapolis, IN 46204
(317) 637-1321 main
(317) 687-2344 fax

December 9, 2025

Via Certified Mail, Return Receipt Requested
9589 0710 5270 1450 3455 95

Hon. Marshall Todd
Pulaski County Judge Executive
100 N Main St, Suite 202
Somerset KY 42501

RE: Notice of Proposal to Construct Wireless Communications Facility
Kentucky Public Service Commission Docket No. 2025-00388
Site Name: Nancy

Dear Judge Todd:

APC Towers IV, LLC and Cellco Partnership, d/b/a Verizon Wireless propose to construct a wireless communications facility on a site located at 376 Lanetown Road; Nancy KY 42544 (North Latitude: (37° 04' 24.78"), West Longitude (84° 44' 30.23"). The proposed facility will include a 190-foot-tall self-supporting tower, plus a 4-foot lightning arrestor and related ground facilities. This facility is needed to provide improved coverage for wireless communications in the area.

You have a right to submit comments to the PSC or request intervention in the PSC's proceedings on the application. You may contact the PSC at: Executive Director, Public Service Commission, 211 Sower Boulevard, PO Box 615, Frankfort, Kentucky 40602. Please refer to docket number 2025-00388 in any correspondence sent in connection with this matter.

We have attached a map showing the site location for the proposed tower. Verizon Wireless' radio frequency engineers assisted in selecting the proposed site for the facility, and they have determined it is the proper location and elevation needed to provide quality service to the wireless customers in the area. Please feel free to contact us with any comments or questions you may have.

Sincerely,

Russell L. Brown
Attorney for Applicant

LOCATION MAPS

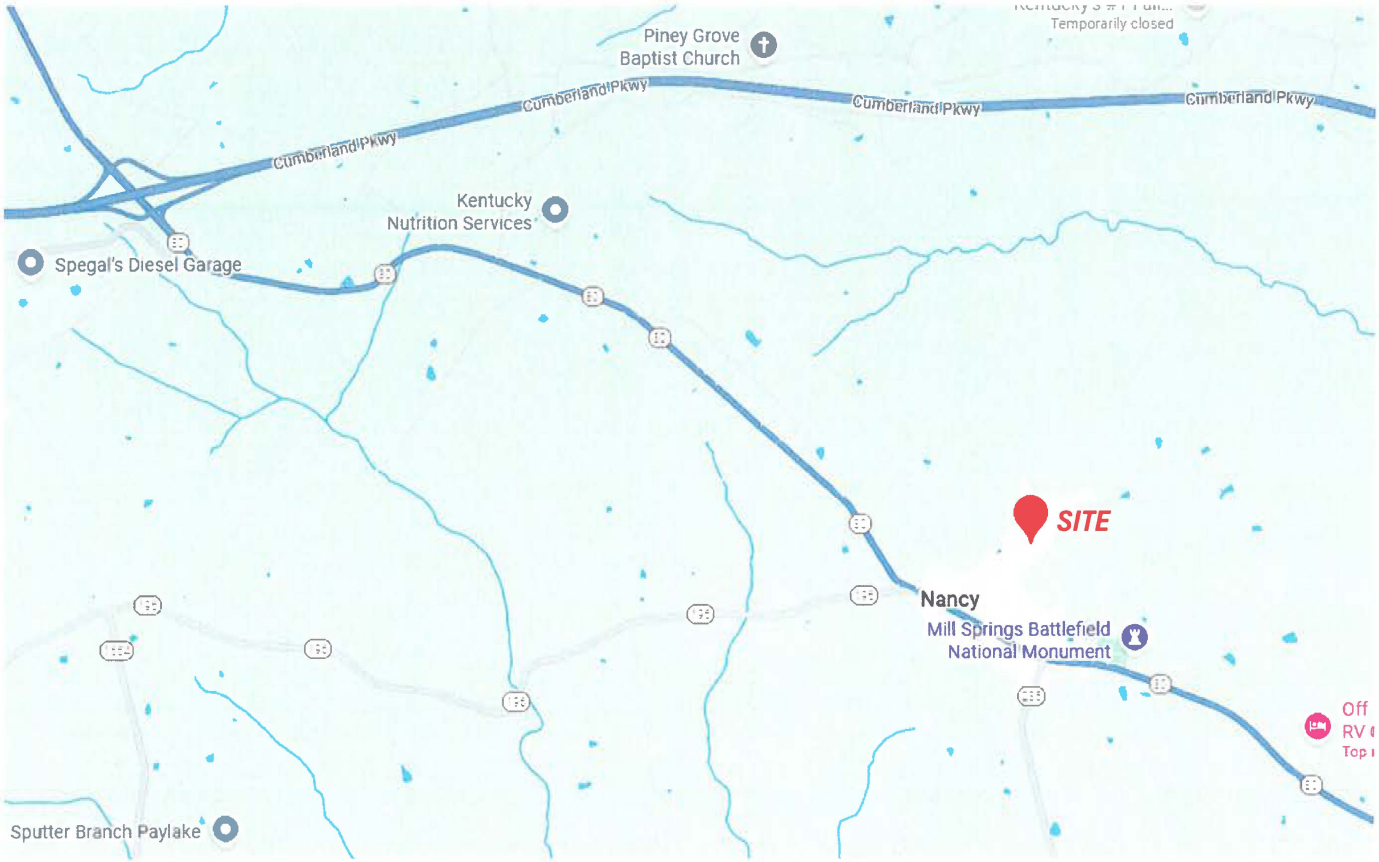

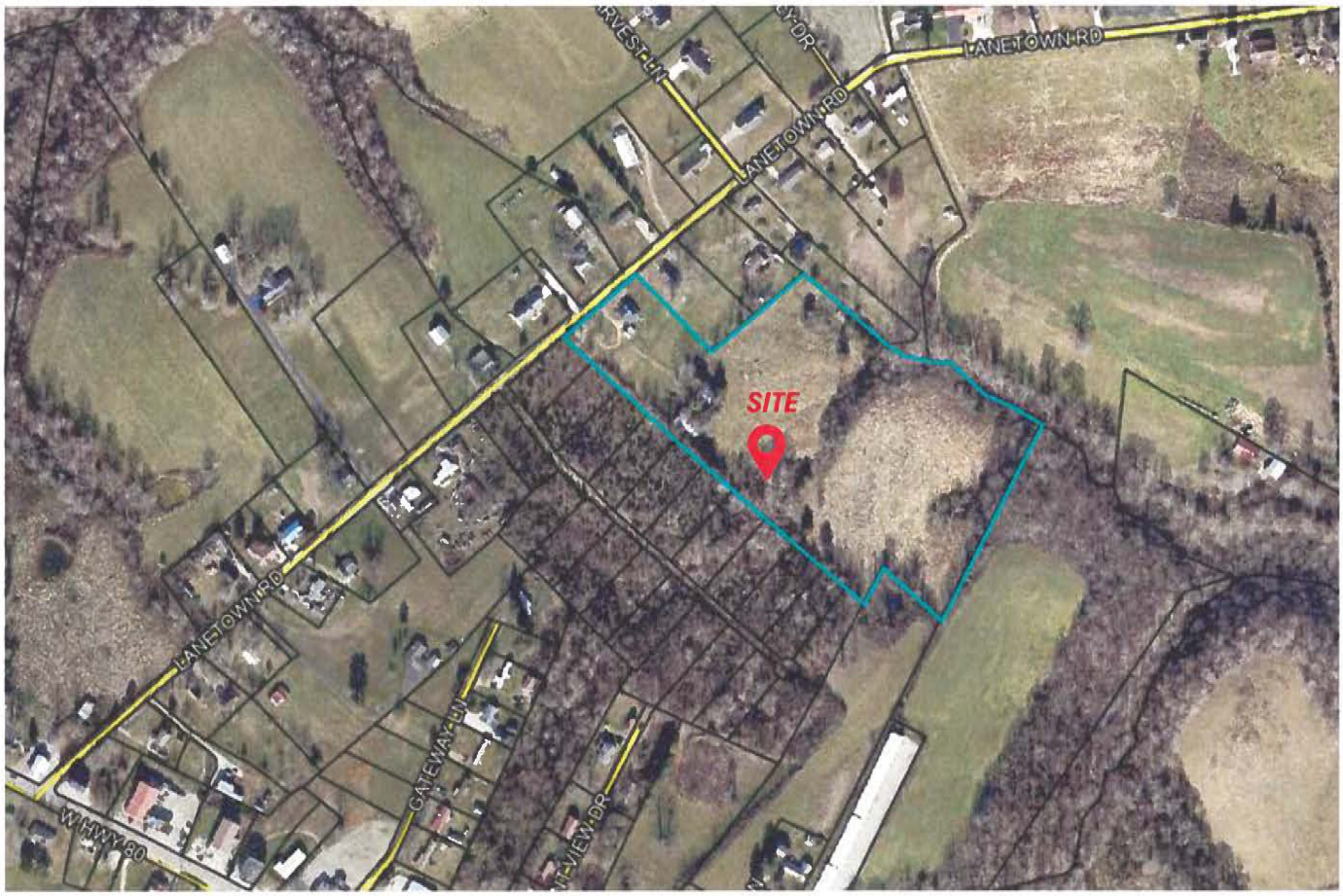

ClarkQuinn
Clark, Quinn, Moses, Scott & Grahn, LLP

PLACE STICKER AT TOP OF ENVELOPE TO THE RIGHT
OF THE RETURN ADDRESS, FOLD AT DOTTED LINE

CERTIFIED MAIL®

9589 0710 5270 1450 3455 95

FIRST-CLASS

US POSTAGE™ PITNEY BOWES

ZIP 46204
02 7H
0006035028

$ 010.44⁰
DEC 09 2025

Hon. Marshall Todd
Pulaski County Judge Executive
100 N Main St, Suite 202
Somerset KY 42501

SENDER: *COMPLETE THIS SECTION*

- Complete items 1, 2, and 3.
- Print your name and address on the reverse so that we can return the card to you.
- Attach this card to the back of the mailpiece, or on the front if space permits.

1. Article Addressed to:

Hon. Marshall Todd
Pulaski County Judge Executive
100 N Main St, Suite 202
Somerset KY 42501

9590 9402 9112 4225 4787 62

2. Article Number *(Transfer from service label)*

9589 0710 5270 1450 3455 95

COMPLETE THIS SECTION ON DELIVERY

A. Signature

X

☐ Agent
☑ Addressee

B. Received by *(Printed Name)* John Alexander

C. Date of Delivery 12-15-23

D. Is delivery address different from item 1? ☐ Yes
If YES, enter delivery address below: ☐ No

3. Service Type

☐ Adult Signature
☐ Adult Signature Restricted Delivery
☐ Certified Mail®
☐ Certified Mail Restricted Delivery
☐ Collect on Delivery
☐ Collect on Delivery Restricted Delivery
☐ Insured Mail
Mail Restricted Delivery
00)

☐ Priority Mail Express®
☐ Registered Mail™
☐ Registered Mail Restricted Delivery
☐ Signature Confirmation™
☐ Signature Confirmation Restricted Delivery

PS Form 3811, July 2020 PSN 7530-02-000-9053 Domestic Return Receipt

SITE NAME: NANCY
NOTICE SIGNS

The signs are at least (2) feet by four (4) feet in size, of durable material, with the text printed in black letters at least one (1) inch in height against a white background, except for the word **"tower,"** which is at least four (4) inches in height.

APC Towers IV, LLC and Cellco Partnership, d/b/a Verizon Wireless proposes to construct a telecommunications **tower** on this site. If you have questions, please contact Clark, Quinn, Moses, Scott & Grahn, LLP, 320 N. Meridian Street, Indianapolis, IN 46204; 317-637-1321, or the Executive Director, Public Service Commission, 211 Sower Boulevard, PO Box 615, Frankfort, Kentucky 40602. Please refer to docket number 2025-00388 in your correspondence.

APC Towers IV, LLC and Cellco Partnership, d/b/a Verizon Wireless proposes to construct a telecommunications **tower** on this site. If you have questions, please contact Clark, Quinn, Moses, Scott & Grahn, LLP, 320 N. Meridian Street, Indianapolis, IN 46204; 317-637-1321, or the Executive Director, Public Service Commission, 211 Sower Boulevard, PO Box 615, Frankfort, Kentucky 40602. Please refer to docket number 2025-00388 in your correspondence.

ClarkQuinn
Clark, Quinn, Moses, Scott & Grahn, LLP

VIA EMAIL: news@somerset-kentucky.com
rramsey@somerset-kentucky.com

Commonwealth Journal
110 – 112 East Mt. Vernon Street
Somerset KY 42501

RE: Legal Notice Advertisement
Site Name: Nancy

To Whom It May Concern,

Please publish the following legal notice advertisement in the next available edition of The Commonwealth Journal serving Pulaski County, KY:

NOTICE

Cellco Partnership, d/b/a Verizon Wireless and APC Towers IV, LLC are filing an application with the Kentucky Public Service Commission ("PSC") to construct a new wireless communications facility on a site located at 376 Lanetown Road; Nancy KY 42544. (North Latitude: (37° 04' 24.78", West Longitude 84° 44' 30.23"). The proposed facility will include a 195-foot-tall antenna tower, plus a 4-foot lightning arrestor and related ground facilities. Site name is Nancy. You have a right to submit comments to the PSC or to request intervention in the PSC's proceedings on the application. You may contact the PSC at: Executive Director, Public Service Commission, 211 Sower Boulevard, P.O. Box 615, Frankfort, Kentucky 40602. Please refer to docket number 2025-00388 in any correspondence sent in connection with this matter.

After this advertisement has been published, please forward a tearsheet copy, affidavit of publication, and invoice to Clark, Quinn, Moses, Scott & Grahn, LLC, 320 N. Meridian Street, Indianapolis, IN 46204 or by email to jcsikos@clarkquinnlaw.com. Please call me on with any questions at 317-637-1321 extension 319 if you have any questions. Thank you for your assistance.

Sincerely,

Joseph M Csikos AICP

LV NANCY DT

SARF	**Details**
Atoll Market	LOUISVILLE
SR Name	LV Nancy DT
Granite Locale	IN
Address	565 LANETOWN RD
City	NANCY
State	KY
County	Pulaski
ZIP	42544
Latitude	37.0765981
Longitude	-84.7407691
Radius (mi)	0.5
Center Line (ft)	240
# Sectors	3

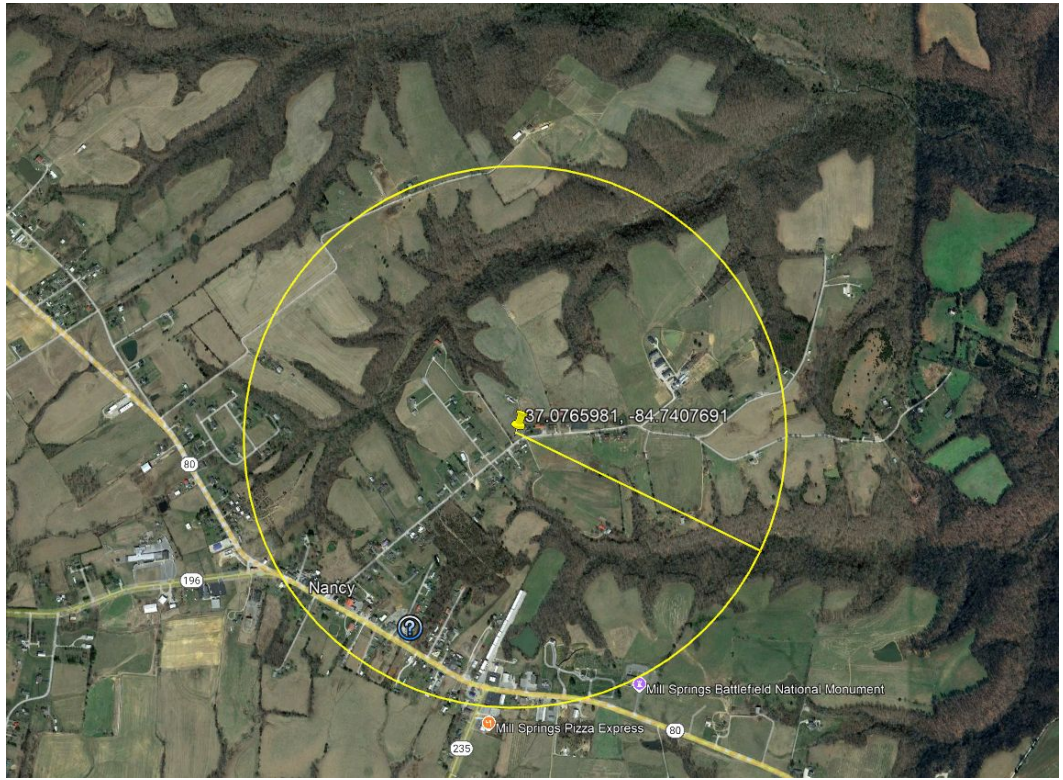

Existing towers in the SARF

Structure Registration	Owner	Structure Type	Structure Height	Lat	Lon
Vertical Bridge_US-KY-1281	Vertical Bridge	Rooftop	24'	37.070465	-84.744851

October 16th 2025

Re: Radiofrequency Justification for Proposed Wireless Communications Facility for Cellco Partnership d/b/a Verizon Wireless ("Verizon")

Tower Developer and Owner: APC Towers LLC
Facility Site Name: LV Nancy DT
Type of Tower: Monopole
Tower Height: 199 ft.
Location: 376 Lanetown Rd, Nancy, KY 42544

To Whom It May Concern:

As a radio frequency engineer for Verizon am providing this letter to state the need for a proposed Verizon wireless communications site called "LV Nancy DT".

The LV Nancy DT site is proposed to meet the following objectives:

1. To offload excess traffic from existing Verizon sites in this area that are operating at or near capacity.
2. To improve service in the city of Nancy Ky.

Currently Verizon customers are experiencing poor service in the city of Nancy, and the immediately surrounding area ("Gap Area") because there is a high demand for wireless service and high-speed data there and Verizon's network cannot keep up with that demand. Simply put, Verizon's existing communications sites in and around the Gap Area are over capacity and therefore they cannot sufficiently handle the traffic. The new proposed tower is needed to offload this excess traffic so that Verizon can provide critical service improvements to its customers in the area, including first responders, residents, and businesses.

When Verizon identifies the need for a new site in an area, its design engineers establish search area criteria in order to effectively meet specific coverage objectives as well as offload existing Verizon cell sites that can no longer meet service demands. These criteria are used to identify a "Search Area" in which the new tower would need to be located to meet the coverage and capacity objectives. The proposed tower is also designed to provide a single solution that decreases the chances that a second tower will be needed in the immediate area in the near future. Each wireless communications site covers a limited area, depending on site configuration and the surrounding terrain. Cell sites are built in an interconnected network, which means each cell site must be located so that their respective coverage areas are contiguous. This provides uninterrupted service throughout the coverage area.

Verizon cares about the communities it serves and prefers to collocate on existing structures when feasible. Collocation typically involves lower construction costs, faster deployment, and environment protection. For these reasons, Verizon makes every effort to investigate the feasibility for using existing towers or other tall structures for collocation when designing a new site or system expansion. However, collocation on an existing tower or tall structure is not always feasible due to location of existing cell sites. Cell sites are placed in a way so they provide smooth hand off to each other and are placed at some distance from each other to eliminate too much overlap. Too much overlap may result in a waste of resources or raise a system capacity overload concern.

Here, Verizon is currently collocated on several existing towers in the areas surrounding the Search Area. However, there are no existing structures within the Search Area on which Verizon could collocate to meet its coverage and capacity objectives in the Gap Area. For this reason, Verizon worked with APC Towers LLC to identify a site in the Search Area on which a new tower could be built that would meet the stated objectives. The proposed new tower, located at 376 Lanetown Rd, Nancy, KY 42544, will be built near the center of the Search Area. Both the proposed location and height of the tower are designed to meet the stated objectives with a single tower. Specifically, the tower will have an overall tower height of 199' with Verizon's equipment installed at a centerline of 195'. This centerline is the minimum height necessary to allow Verizon to be able to adequately cover the Gap Area and to offload traffic from the nearby existing Verizon sites that are currently overloaded. If Verizon is limited to installing its equipment at a centerline that is lower than the proposed height, another tower would be needed in the vicinity in the near future in order to provide the additional coverage and capacity offload that is needed in the Gap Area.

If APC Towers LLC is unable to build the proposed site and therefore Verizon is unable to collocate its equipment on it at a centerline of 195', Verizon will be prohibited from serving its customers in the Gap Area.

This cell site has been designed, and shall be constructed and operated, in a manner that satisfies regulations and requirements of all applicable governmental agencies that have been charged with regulating tower specifications, operation, construction, and placement, including the FAA and FCC.

Sincerely,

Steven Belcher
Sr. RF Engineer
Verizon Wireless

verizon

Current Coverage – Without Proposed Site LV Nancy DT

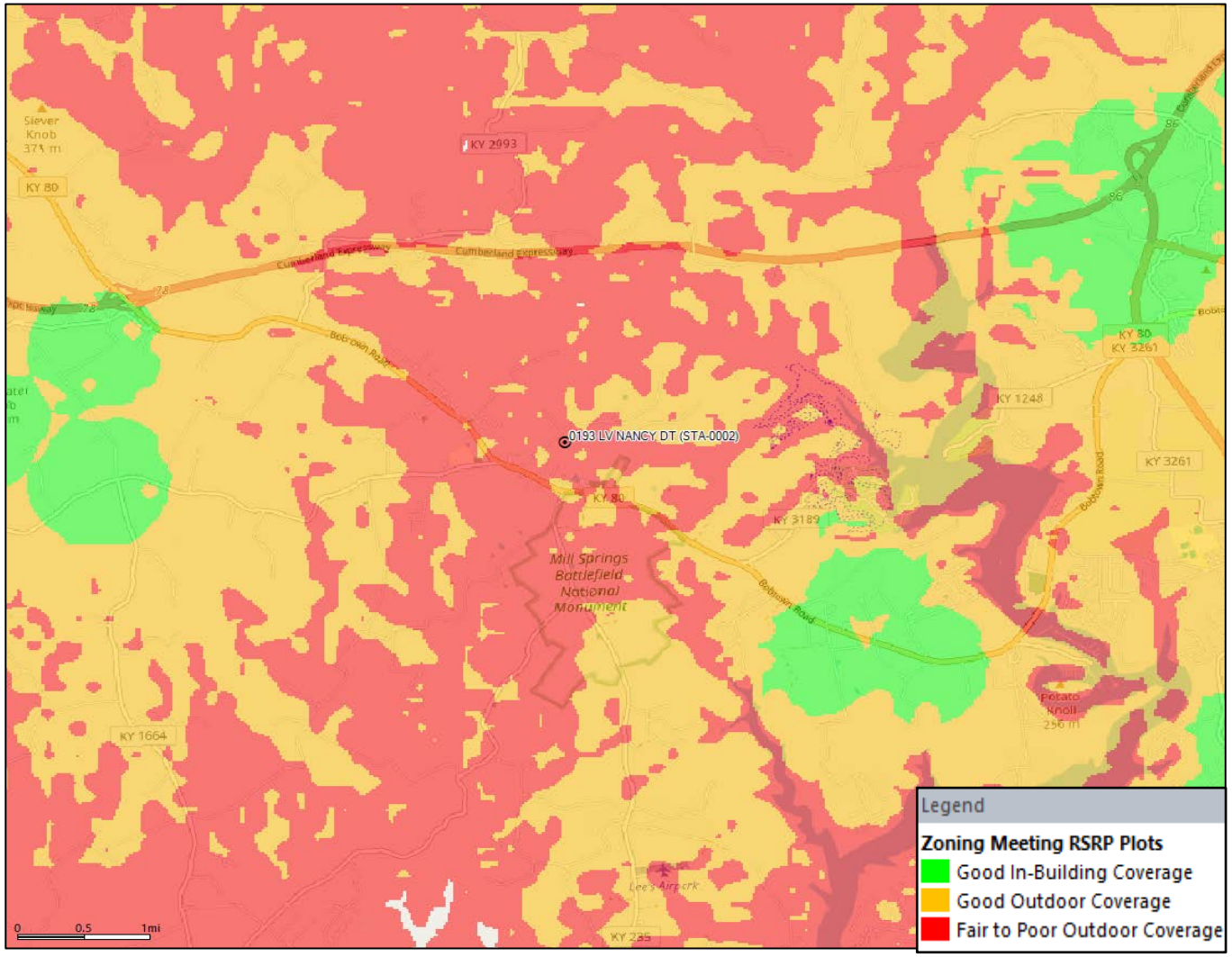

verizon

Proposed Coverage – With Proposed Site LV Nancy DT

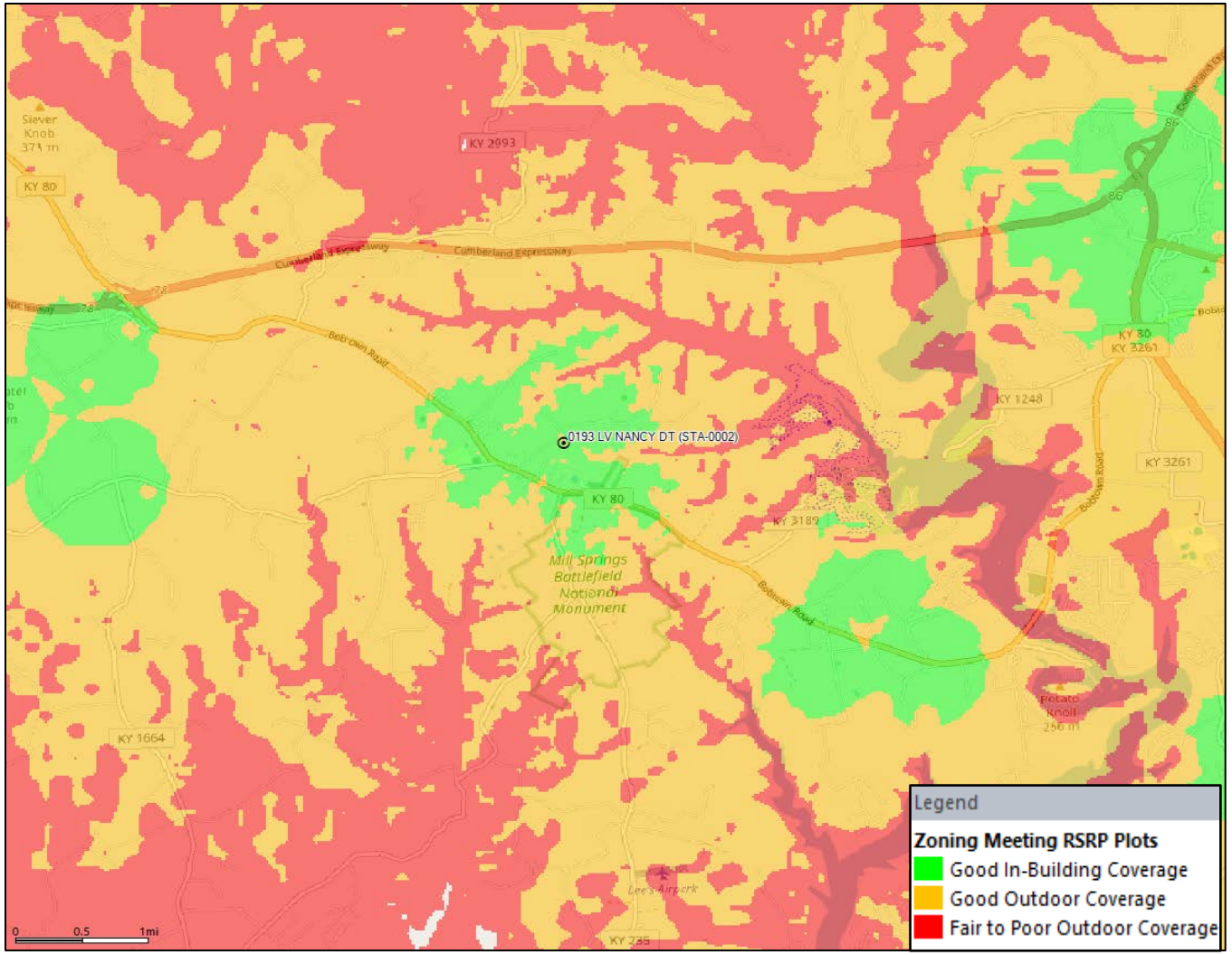

Exhibit S
List and Identity and Qualifications of Professionals

Stephen E. Hunt
Professional Engineer
Kentucky License 25003
TeleCad Communications
1961 Northpoint Blvd. Suite 130
Hixson, TX, 37343

F.V. Neeley
Professional Land Surveyor
Kentucky License 3093
Sharondale Surveying Inc.
7733 Second Fiddle Way
Arrington TN 37014

Raphael Mohamed
Professional Engineer
Kentucky License 24429
Engineered Tower Solutions, PLLC
3227 Wellington Court
Raleigh NC 27615

Jay Parker
VP of Construction
APC Towers
8601 Six Forks Rd, Suite 250
Raleigh NC 27615

Steven Belcher
Senior RF Engineer
Verizon Wireless
2421 Holloway Road
Louisville, KY 40299

Brad R Milanowski
Professional Engineer
Kentucky License 25311
B+T Group
1717 S Boulder Ave, Suite 300
Tulsa OK 74119

STATE OF INDIANA)
) SS:
COUNTY OF MARION)

AFFIDAVIT OF CERTIFICATION
COMMONWEALTH OF KENTUCKY
PUBLIC SERVICE COMMISSION

I, Russell L. Brown, attorney for Cellco Partnership d/b/a Verizon Wireless and APC Towers IV, LLC hereby certify that as the person supervising the preparation of this application and all statements and information contained herein are true and accurate to the best of that person's knowledge, information, and belief formed after a reasonable inquiry for all information within this application.

Russell L. Brown
Attorney, for Cellco Partnership, d/b/a Verizon Wireless and TowerCo 2013, LLC

STATE OF INDIANA)
) SS:
COUNTY OF MARION)

Subscribed and sworn to before me this 3rd day of February 2026.

Notary Public
Printed Name of Notary: Joseph M. Csikos
My Commission Expires: August 5, 2033
My County of Residence: Johnson
Commission No. NP0765036

NOTARY PUBLIC SEAL INDIANA
JOSEPH M CSIKOS
Notary Public, State of Indiana
Johnson County
Commission Number NP0765036
My Commission Expires
August 05, 2033