NOTES

1. DO NOT SCALE DRAWINGS.
2. LINE BRACE POSTS SHALL BE SPACED AT 400 FT INTERVALS WHERE FENCING IS CONTINUOUS AND WHERE END, CORNER & LINE BRACE POSTS ARE NOT SPECIFIED.
3. ALL LINE POSTS SHALL BE 5" ø MIN. AND 12' LONG. ALL END, CORNER, AND LINE BRACE POSTS SHALL BE 6" ø MIN. AND 12' LONG. ALL POSTS AND BRACES SHALL BE TREATED.
4. WOODEN STAYS SHALL BE UNTREATED NATIVE TIMBER. BOTTOM ENDS OF STAYS SHALL REST ON THE NATURAL GROUND AND SHALL BE WIRED AND STAPLED AS INDICATED.
5. WIRE SHALL BE DOUBLE WRAPPED AND TIED OFF AT END POSTS, CORNER POSTS, AND LINE BRACE POSTS. WOVEN WIRE SHALL BE SINGLE WRAPPED AND TIED OFF.
6. FENCE MAY BE PLACED ON EITHER THE ROAD SIDE OR FIELD SIDE OF POSTS, DEPENDING ON LOCAL CONDITIONS; I.E., ON CURVES, THE WIRE SHOULD BE PLACED ON THE SIDE WHICH WOULD RESULT IN THE LEAST AMOUNT OF TENSION ON THE STAPLES. THIS WILL ALSO APPLY WHERE WIND DRIFT OR OTHER CONDITIONS WOULD EXERT UNUSUAL PRESSURE AGAINST THE WIRE.
7. WILDLIFE PASSAGE: CONSTRUCT SO THAT A MIN. 6"x6" OPENING IN FENCE FABRIC WIRING PATTERN EXISTS IN MAX. 100' INTERVALS - SEE TYPICAL DEER FENCE WIRE FABRIC FENCE DETAIL.
8. GAP CLOSURE: EXCEPT FOR DEER GATES, CONSTRUCT FENCE WITHOUT OPENINGS OR GAPS, ESPECIALLY AT STRUCTURES, CLIFFS, AND IRREGULAR ROUND. WHEN A 6" OR LARGER GAP EXISTS BELOW THE NORMAL BOTTOM FENCE WIRE, THE GAP SHALL BE CLOSED ACCORDING TO THE CLOSURE DETAIL. ALL EXTRA MATERIAL USED FOR GAP CLOSURES OF ANY TYPE OR LOCATION SHALL BE INCLUDED IN THE WORK.
9. CONTRACTOR TO PROVIDE SHOP DRAWINGS FOR REVIEW FOR ALL FENCING COMPONENTS PRIOR TO INSTALLATION.

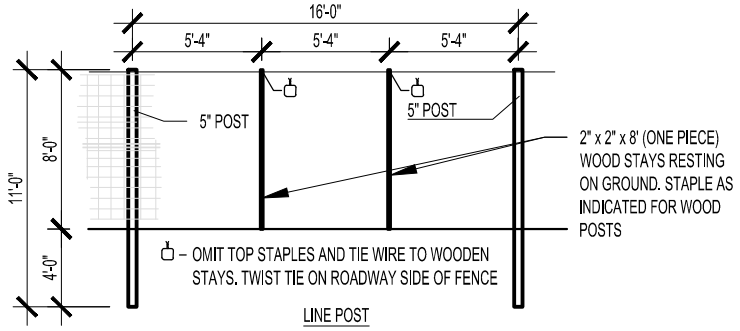

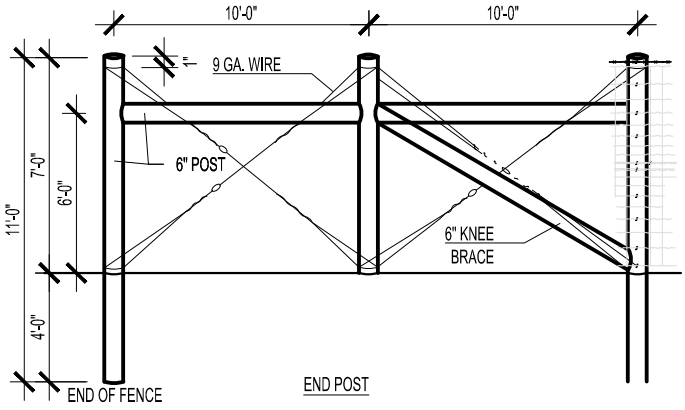

TYPICAL DEER FENCE & END POST DETAILS
NTS

DEER FENCE DETAILS

NTS

© Environmental Consulting & Technology, Inc.

Deer Fence Detail.dwg

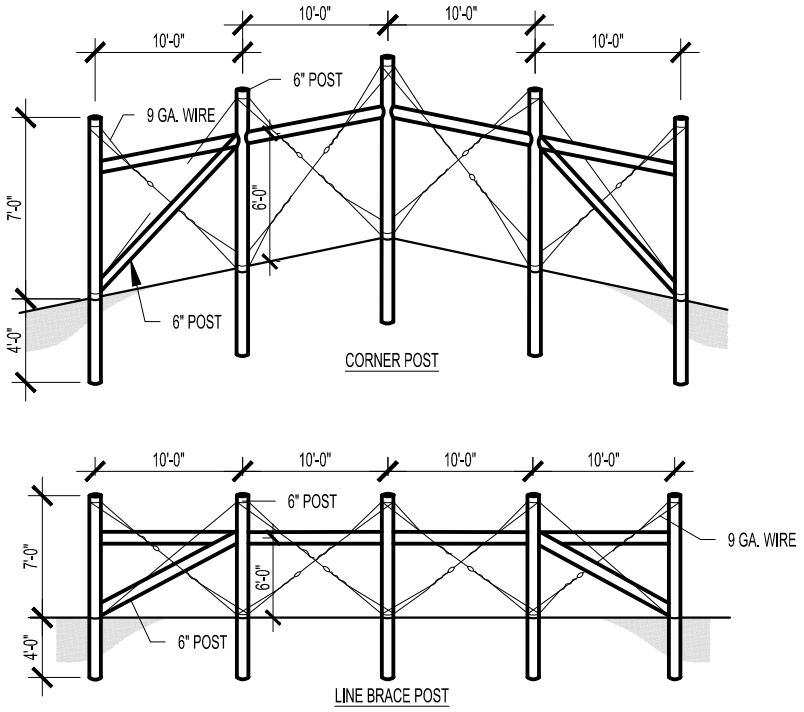

TYPICAL DEER FENCE LINE BRACE POST DETAILS
NTS

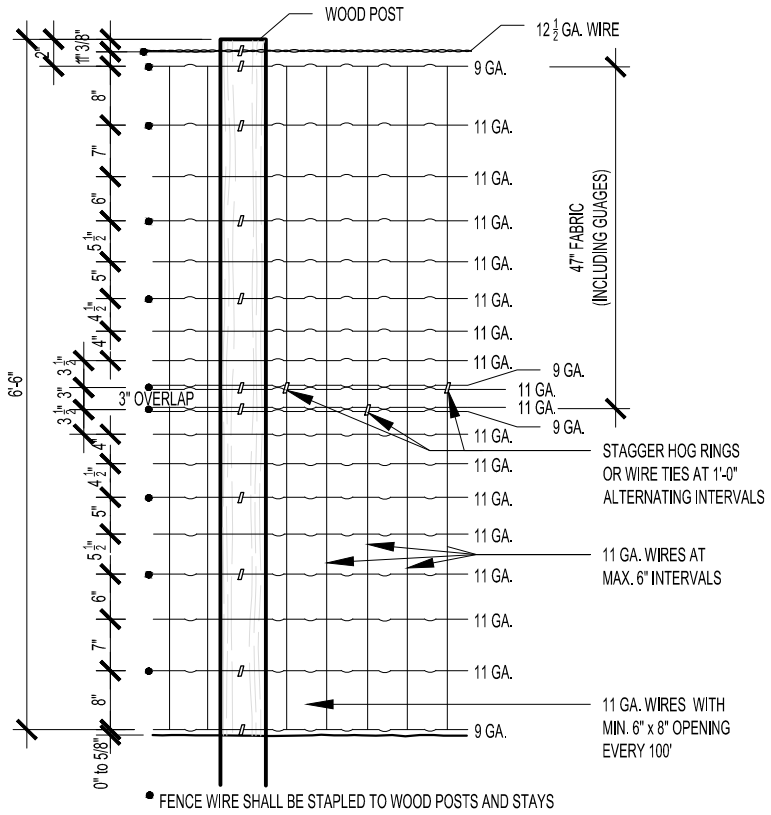

TYPICAL DEER FENCE WIRE FABRIC FENCE DETAIL
NTS

DEER FENCE DETAILS

NTS

© Environmental Consulting & Technology, Inc.

Deer Fence Detail.dwg

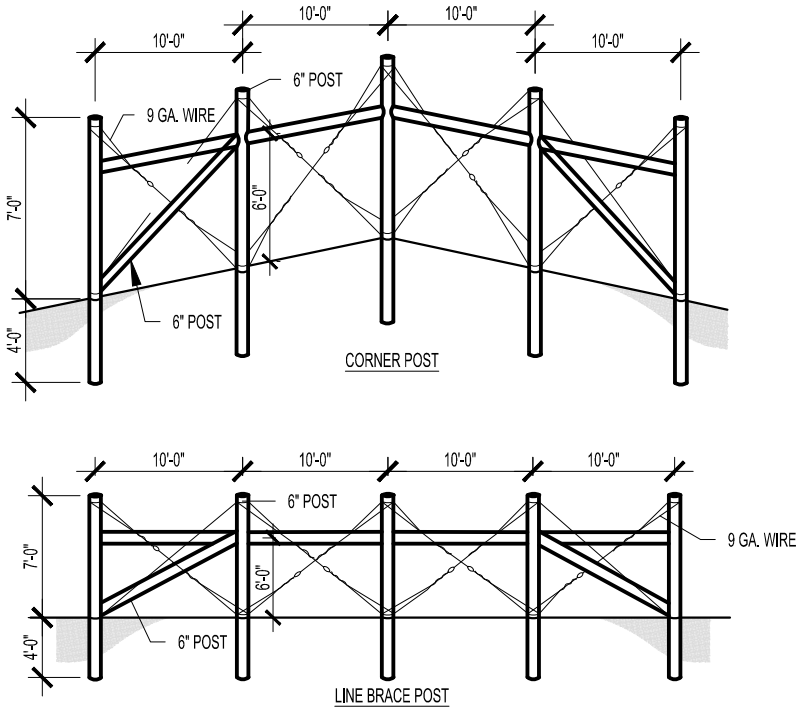

TYPICAL DEER FENCE LINE BRACE POST DETAILS
NTS

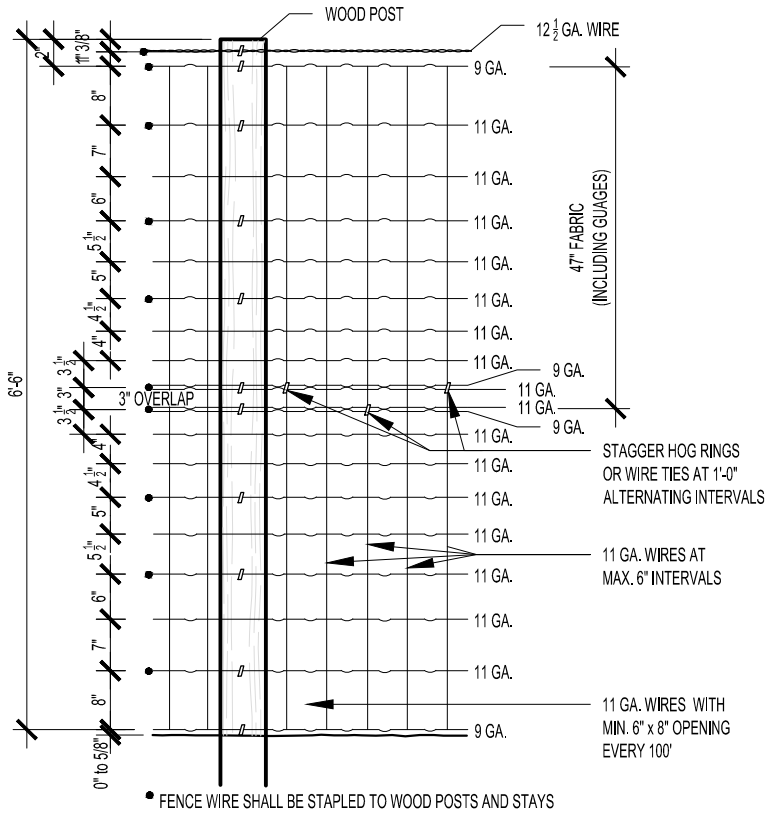

TYPICAL DEER FENCE WIRE FABRIC FENCE DETAIL
NTS

DEER FENCE DETAILS

NTS

© Environmental Consulting & Technology, Inc.

Deer Fence Detail.dwg