COMMONWEALTH OF KENTUCKY
BEFORE THE PUBLIC SERVICE COMMISSION

In the Matter of:

THE APPLICATION OF TOWERCO 2013, LLC, AND CELLCO PARTNERSHIP D/B/A VERIZON WIRELESS FOR ISSUANCE OF A CERTIFICATE OF PUBLIC CONVENIENCE AND NECESSITY TO CONSTRUCT A WIRELESS COMMUNICATIONS FACILITY IN THE COMMONWEALTH OF KENTUCKY IN THE COUNTY OF RUSSELL	)	CASE NO. 2025-00252

SITE NAME: LAKE VALLEY

* * * * * * *

APPLICATION FOR
CERTIFICATE OF PUBLIC CONVENIENCE AND NECESSITY
FOR CONSTRUCTION OF A WIRELESS COMMUNICATIONS FACILITY

TowerCo 2013, LLC and Cellco Partnership, d/b/a Verizon Wireless and ("Co-Applicants"), by counsel, pursuant to (i) KRS §§278.020, 278.040, 278.650, 278.665, and other statutory authority, and the rules and regulations applicable thereto, and (ii) the Telecommunications Act of 1996, respectfully submit this Application requesting issuance of a Certificate of Public Convenience and Necessity ("CPCN") from the Kentucky Public Service Commission ("PSC") to construct, maintain, and operate a Wireless Communications Facility ("WCF") to serve the customers of the Co-Applicant with wireless communications services.

In support of this Application, Co-Applicants respectfully provide and state the following information:

1. The complete name and address of the Co-Applicants:

   a. TowerCo 2013, LLC, having a local address of 5000 Valleystone Drive, Cary, NC 27519

b. Cellco Partnership, d/b/a Verizon Wireless, having a local address of 2902 Ring Road, Elizabethtown, KY, 42701.

2. Co-Applicants:

a. TowerCo 2013, LLC is a Delaware limited liability company and copies of the formulation document and the Statement of Good Standing from Delaware, and the Certificate of Authorization is on file with the Secretary of State of Commonwealth of Kentucky, are included as part of **Exhibit A**.

b. Cellco Partnership, d/b/a Verizon Wireless is a Delaware general partnership and a copy of the Statement of Good Standing from Delaware, and the Certificate of Assumed Name is on file with the Secretary of State of Commonwealth of Kentucky and included as part of **Exhibit A**.

3. Co-Applicants propose construction of an antenna tower for communications services, which is to be located in an area outside the jurisdiction of a planning commission, and Co-Applicants submit this application to the PSC for a certificate of public convenience and necessity pursuant to KRS §§ 278.020(1), 278.040, 278.650, 278.665, and other statutory authority.

4. The Co-Applicant operates on frequencies licensed by the Federal Communications Commission ("FCC") pursuant to applicable FCC requirements. A copy of the Co-Applicants' application for FCC Registration and Licenses to provide wireless services are attached to this Application or described as part of **Exhibit B**, and the facility will be constructed and operated in accordance with applicable FCC regulations. The certified ASR will be provided as soon as received.

5. The public convenience and necessity require the construction of the proposed WCF. The construction of the WCF will bring or improve the Co-Applicant's services to an area currently not served or not adequately served by the Co-Applicants by increasing coverage or capacity and thereby enhancing the public's access to innovative and competitive wireless communications services. A statement from Co-Applicants' RF Design Engineers outlining said need is attached as **Exhibit Q** along with Propagation Maps attached as **Exhibit R**. The WCF is an integral link in the Applicant's network design that must be in place to provide adequate coverage to the service area.

6. To address the above-described service needs, Co-Applicants propose to construct a WCF located on the west side of Kentucky Highway 1611, approximately 4.7 miles southwest of Kentucky Highway 76, Russell Springs, KY 42642 (North Latitude: (36° 58' 16.42", West Longitude 84° 58' 53.50", on a parcel of land located entirely within the county referenced in the caption of this application. The property on which the WCF will be located is owned by Douglas K Polston to a Deed recorded in Deed Book 280 Page 733, dated December 9, 2010 in the office of the County Clerk. The proposed WCF will consist of a 255-foot-tall tower, with an approximately 5-foot tall lightning arrestor attached at the top, for a total height of 260-feet. The WCF will also include concrete foundations and a shelter or cabinets to accommodate the placement of the Co-Applicants' radio electronics equipment and appurtenant equipment. The Co-Applicants' equipment cabinet or shelter will be approved for use in the Commonwealth of Kentucky by the relevant building inspector. The WCF compound will be fenced and all access gate(s) will be secured. A description of the manner in which the proposed WCF will be constructed is attached as **Exhibit C** and **Exhibit D**.

7. A list of utilities, corporations, or persons with whom the proposed WCF is likely to compete along with a map showing the proposed location as well as the identified like facilities is attached as **Exhibit E**.

8. The site development plan and a vertical profile sketch of the WCF signed and sealed by a professional engineer registered in Kentucky depicting the tower height, as well as a proposed configuration for the antennas of the Co-Applicant has also been included as part of **Exhibit C**.

9. Foundation design plans signed and sealed by a professional engineer registered in Kentucky and a description of the standards according to which the tower was designed are included as part of **Exhibit D**.

10. Co-Applicants have considered the likely effects of the installation of the proposed WCF on nearby land uses and values and has concluded that there is no more suitable location reasonably available from which adequate services can be provided, and that there are no reasonably available opportunities to co-locate Co-Applicant's antennas on an existing structure. When suitable towers or structures exist, Co-Applicant attempts to co-locate on existing structures such as communications towers or other structures capable of supporting Co-Applicant's facilities; however, no other suitable or available co-location site was found to be located in the vicinity of the site. A statement from Co-Applicant, Cellco Partnership, d/b/a Verizon Wireless's RF Design Engineer outlining exploration of co-location opportunities is attached as **Exhibit Q**.

11. A copy of the Application for Federal Aviation Administration's ("FAA") and the FAA Determination of No Hazard are attached as **Exhibit F**.

12. A copy of the Kentucky Airport Zoning Commission ("KAZC") documentation of Application is attached as **Exhibit G**. The KAZC Approval will be provided as soon as received.

13. A geotechnical engineering report was performed at the WCF site by Engineered Tower Solutions, PLLC, 3227 Wellington Court, Raleigh, NC 27615, dated October 31, 2025 and is attached as **Exhibit H**. The name and address of the geotechnical engineering firm and the professional engineer registered in Kentucky who prepared the report are included as part of **Exhibit H and Exhibit S**.

14. Clear directions to the proposed WCF site from the County seat are attached as **Exhibit I**. The name and telephone number of the preparer of **Exhibit I** are included as part of this exhibit.

15. Applicant, pursuant to a written agreement, has acquired the right to use the WCF site and associated property rights. A copy of the agreement or an abbreviated agreement recorded with the County Clerk is attached as **Exhibit J**.

16. Personnel directly responsible for the design and construction of the proposed WCF are well qualified and experienced. The tower and foundation drawings for the proposed tower submitted as part of **Exhibit D** bear the signature and stamp of a professional engineer registered in the Commonwealth of Kentucky. All tower designs meet or exceed the minimum requirements of applicable laws and regulations. The identity and qualifications of each person directly responsible for design and construction of the proposed tower are contained in **Exhibit S**.

17. The Construction Manager for the proposed facility is Evan Lowe and the identity and qualifications of each person directly responsible for design and construction of the proposed tower are contained in **Exhibit S**.

18. As noted on the Survey attached as part of **Exhibit C**, the surveyor has determined that the tower site and access easement are not within any flood hazard area per Flood Hazard Boundary Map, Community Panel Number 21207C0230C, Dated August 19, 2010.

19. **Exhibit C** includes a map drawn to an appropriate scale that shows the location of the proposed tower and identifies every owner of real estate within 500 feet of the proposed tower, every owner of real estate within 200 feet of the access road including intersection with the public street system and all abutting property owners (according to the records maintained by the County Property Valuation Administrator). Attached as **Exhibit L** is the Notification List with screen shots of the PVA records verified and updated using the Marshall County PVA on July 29, 2025. **Exhibit C** also identifies every structure and every easement within 500 feet of the proposed tower or within 200 feet of the access road including intersection with the public street system.

20. Co-Applicants have sent certified notices to every person who, according to the records of the County Property Valuation Administrator, owns property which is within 500 feet of the proposed tower or contiguous to the site property, by certified mail, return receipt requested, of the proposed construction. Each notified property owner has been provided with a map of the location of the proposed construction, the PSC docket number for this application, the address of the PSC, and informed of his or her right to request intervention. A list of the notified property owners, verified on July 29, 2025, using the Russell County Kentucky Property Valuation Administration records and a copy of the form of the notice sent by certified mail to each landowner on July 29, 2025, are attached as **Exhibit K** and **Exhibit L**, respectively. Ten (10) notices were sent to surrounding property owners; to date four (4) notice green cards have been returned and the remaining six (6) notices showing delivered in the USPS Tracking system. Copies of the mailed envelopes, returned green cards, and USPS Tracking are included in **Exhibit L**. There are no unaccountable notices.

21. Co-Applicants have notified the applicable County Judge/Executive by certified mail, return receipt requested, of the proposed construction. This notice included the PSC docket

number under which the application will be processed and informed the County Judge/Executive of his/her right to request intervention. A copy of this notice along with a copy of the mailed envelope and returned green card is attached as **Exhibit M**.

22. Notice signs meeting the requirements prescribed by 807 KAR 5:063, Section 1(2) that measure at least 2 feet in height and 4 feet in width and that contain all required language in letters of required height, have been posted, one in a visible location on the proposed site and one on the nearest public road. Such signs shall remain posted for at least two weeks after filing of the Application, and a copy of the posted text is attached as **Exhibit N**.

23. A legal notice advertisement regarding the location of the proposed facility has been published in a newspaper of general circulation in the county in which the WCF is proposed to be located. A copy of the newspaper legal notice advertisement is attached as **Exhibit O**.

24. The area of the proposed facility is in the unincorporated area of Russell County, Kentucky. The site is located on the west side of Kentucky Highway 1611, approximately 4.7 miles southwest of Kentucky Highway 76, Russell Springs, KY 42642. The area is buffered by a tree line to the south, as well as vegetated fence lines along Highway 1611 and Polston Town Rd. There is also a stand to the southeast that offers some buffering. The area is largely undeveloped with a scattering of single-family homes. The parcel is open pasture and undeveloped open space. The terrain is relatively flat to rolling. There is no zoning or Plan Commission in this area of Russell County. The proposed facility is removed a significant distance from any residential structures. The nearest residential structure is 467.42 feet from the proposed tower site.

25. The process that was used by the Co-Applicant's radio frequency engineers in selecting the site for the proposed WCF was consistent with the general process used for selecting all other existing and proposed WCF facilities within the proposed network design area. Co-

Applicant's radio frequency engineers have conducted studies and tests in order to develop a highly efficient network that is designed to handle voice and data traffic in the service area. The engineers determined an optimum area for the placement of the proposed facility in terms of elevation and location to provide the best quality service to customers in the service area. A radio frequency design search area prepared in reference to these radio frequency studies was considered by the Co-Applicant when searching for sites for its antennas that would provide the coverage deemed necessary by the Co-Applicant. A map of the area in which the tower is proposed to be located which is drawn to scale and clearly depicts the necessary search area within which the site should be located pursuant to radio frequency requirements is attached as **Exhibit P**.

26. The tower must be located at the proposed location and proposed height to provide necessary service to wireless communications users in the subject area, as set out and documented in the RF Design Engineer's Statement of Need and Propagation Maps attached as **Exhibit Q** and **Exhibit R,** respectively. The proposed tower will expand and improve voice and data service for Verizon Wireless customers.

27. Attached hereto as **Exhibit T** please find an Affidavit of Certification for all information contained in this application.

28. All Exhibits to this Application are hereby incorporated by reference as if fully set out as part of the Application.

29. All responses and requests associated with this Application may be directed to:

Russell L. Brown
Clark, Quinn, Moses, Scott & Grahn, LLP
320 North Meridian Street, Suite 1100
Indianapolis, IN 46204
Phone: (317) 637-1321
FAX: (317) 687-2344
Email: rbrown@clarkquinnlaw.com

WHEREFORE, Co-Applicants respectfully request that the PSC accept the foregoing Application for filing and, having met the requirements of KRS §§278.020(1), 278.650, and 278 .665 and all applicable rules and regulations of the PSC, grant a Certificate of Public Convenience and Necessity to construct and operate the WCF at the location set forth herein.

Respectfully submitted,

Russell L. Brown
Clark, Quinn, Moses, Scott & Grahn, LLP
320 North Meridian Street, Suite 1100
Indianapolis, IN 46204
Phone: (317) 637-1321 / FAX: (317) 687-2344
Email: rbrown@clarkquinnlaw.com
Attorney for Cellco Partnership d/b/a Verizon Wireless

LIST OF EXHIBITS

A	Applicant Entities
B	FCC Registration and License Documentation
C	Site Development Plan: 500' Vicinity Map Legal Descriptions Flood Plain Certification Site Plan Vertical Tower Profile
D	Tower and Foundation Design
E	Competing Utilities, Corporations, or Persons List And Map of Like Facilities in Vicinity
F	FAA Application and Determination of No Hazard
G	KAZC Documentation of Application
H	Geotechnical Report
I	Directions to WCF Site
J	Real Estate Agreement
K	Notification Listing with PVA Verification
L	Property Owner Notification
M	County Judge/Executive notice
N	Posted Notices
O	Newspaper Legal Notice Advertisement
P	Radio Frequency Design Search Area
Q	Copy of RF Design Engineer Statement of Need
R	Propagation Maps
S	List of Qualified Professionals
T	Affidavit of Certification

Delaware

The First State

I, CHARUNI PATIBANDA-SANCHEZ, SECRETARY OF STATE OF THE STATE OF DELAWARE, DO HEREBY CERTIFY "CELLCO PARTNERSHIP" IS DULY FORMED UNDER THE LAWS OF THE STATE OF DELAWARE AND IS IN GOOD STANDING AND HAS A LEGAL EXISTENCE SO FAR AS THE RECORDS OF THIS OFFICE SHOW, AS OF THE FOURTEENTH DAY OF FEBRUARY, A.D. 2025.

AND I DO HEREBY FURTHER CERTIFY THAT THE ANNUAL TAXES HAVE BEEN PAID TO DATE.

Charuni Patibanda-Sanchez, Secretary of State

3341134 8300

Authentication: 202935577

SR# 20250539476

Date: 02-14-25

You may verify this certificate online at corp.delaware.gov/authver.shtml

COMMONWEALTH OF KENTUCKY

Michael G. Adams
Secretary of State

Certificate

I, Michael G. Adams, Secretary of State for the Commonwealth of Kentucky, do hereby certify that the foregoing writing has been carefully compared by me with the original thereof, now in my official custody as Secretary of State and remaining on file in my office, and found to be a true and correct copy of

CERTIFICATE OF ASSUMED NAME OF VERIZON WIRELESS ADOPTED BY GENERAL PARTNERS OF CELLCO PARTNERSHIP FILED JUNE 21, 2006.

IN WITNESS WHEREOF, I have hereunto set my hand and affixed my Official Seal at Frankfort, Kentucky, this 10th day of May, 2023.

COMMONWEALTH OF KENTUCKY
OFFICE OF SECRETARY OF STATE

Michael G. Adams

Michael G. Adams
Secretary of State
Commonwealth of Kentucky
kdcoleman/0641227 - Certificate ID: 290787

COMMONWEALTH OF KENTUCKY
TREY GRAYSON
SECRETARY OF STATE

0641227.07 Dcornish C226

Trey Grayson
Secretary of State
Received and Filed
06/21/2006 12:06:09 PM
Fee Receipt: $20.00

CERTIFICATE OF ASSUMED NAME

This certifies that the assumed name of

Verizon Wireless

[Name under which the business will be conducted]

has been adopted by See Addendum

[Real name - KRS 365.015(1)]

which is the "real name" of [YOU MUST CHECK ONE]

- [ ] a Domestic General Partnership
- [ ] a Domestic Registered Limited Liability Partnership
- [ ] a Domestic Limited Partnership
- [ ] a Domestic Business Trust
- [ ] a Domestic Corporation
- [ ] a Domestic Limited Liability Company
- [ ] a Joint Venture
- [✓] a Foreign General Partnership
- [ ] a Foreign Registered Limited Liability Partnership
- [ ] a Foreign Limited Partnership
- [ ] a Foreign Business Trust
- [ ] a Foreign Corporation
- [ ] a Foreign Limited Liability Company

organized and existing in the state or country of Delaware, and whose address is

One Verizon Way	Basking Ridge	NJ	07920
Street address, if any	City	State	Zip Code

The certificate of assumed name is executed by

NYNEX PCS Inc.

Jane A. Schapker

Signature

Jane A. Schapker-Assistant Secretary

Print or type name and title

June 15, 2006

Date

Signature

Print or type name and title

Date

SSC-228 (7/98)

(See attached sheet for instructions)

Addendum

The full name of the Partnership is Cellco Partnership; a Delaware general partnership with its headquarters located One Verizon Way, Basking Ridge NJ 07920-1097.

General Partners of Cellco Partnership	Address
Bell Atlantic Cellular Holdings, L.P.	One Verizon Way Basking Ridge, NJ 07920
NYNEX PCS Inc.	One Verizon Way Basking Ridge, NJ 07920
PCSCO Partnership	One Verizon Way Basking Ridge, NJ 07920
GTE Wireless Incorporated	One Verizon Way Basking Ridge, NJ 07920
GTE Wireless of Ohio Incorporated	One Verizon Way Basking Ridge, NJ 07920
PCS Nucleus, L.P.	2999 Oak Road, 7th Floor Walnut Creek, CA 94597
JV PartnerCo, LLC	2999 Oak Road, 7th Floor Walnut Creek, CA 94597

Commonwealth of Kentucky
Michael G. Adams, Secretary of State

Michael G. Adams
Secretary of State
P. O. Box 718
Frankfort, KY 40602-0718
(502) 564-3490
http://www.sos.ky.gov

Certificate of Authorization

Authentication number: 297432
Visit https://web.sos.ky.gov/ftshow/certvalidate.aspx to authenticate this certificate.

I, Michael G. Adams, Secretary of State of the Commonwealth of Kentucky, do hereby certify that according to the records in the Office of the Secretary of State,

TOWERCO 2013 LLC

, a limited liability company authorized under the laws of the state of Delaware, is authorized to transact business in the Commonwealth of Kentucky, and received the authority to transact business in Kentucky on June 12, 2013.

I further certify that all fees and penalties owed to the Secretary of State have been paid; that an application for certificate of withdrawal has not been filed; and that the most recent annual report required by KRS 14A.6-010 has been delivered to the Secretary of State.

IN WITNESS WHEREOF, I have hereunto set my hand and affixed my Official Seal at Frankfort, Kentucky, this 15th day of September, 2023, in the 232nd year of the Commonwealth.

Michael G. Adams
Secretary of State
Commonwealth of Kentucky
297432/0859822

Delaware

The First State

I, JEFFREY W. BULLOCK, SECRETARY OF STATE OF THE STATE OF DELAWARE, DO HEREBY CERTIFY "TOWERCO 2013 LLC" IS DULY FORMED UNDER THE LAWS OF THE STATE OF DELAWARE AND IS IN GOOD STANDING AND HAS A LEGAL EXISTENCE SO FAR AS THE RECORDS OF THIS OFFICE SHOW, AS OF THE TWENTY-SEVENTH DAY OF SEPTEMBER, A.D. 2023.

AND I DO HEREBY FURTHER CERTIFY THAT THE SAID "TOWERCO 2013 LLC" WAS FORMED ON THE THIRD DAY OF OCTOBER, A.D. 2012.

AND I DO HEREBY FURTHER CERTIFY THAT THE ANNUAL TAXES HAVE BEEN PAID TO DATE.

Jeffrey W. Bullock, Secretary of State

5222115 8300

SR# 20233593958

Authentication: 204256340

Date: 09-27-23

You may verify this certificate online at corp.delaware.gov/authver.shtml

FCC Form 854
Main Form

Approved by OMD – 3060-0139
See instructions for public burden estimate

Application for Antenna Structure Registration

Purpose of Filing

1) Enter the application purpose: (**NE**)

AM – Amendment of a Pending Application
AU – Administrative Update
CA – Cancellation of an Antenna Structure Registration
DI – Notification of an Antenna Structure Dismantlement
MD – Modification of a Antenna Structure Registration
NE – Registration of a New Antenna Structure
NT – Required Construction/Alteration Notification
OC – Ownership Change
RE – Registration of a Replacement Antenna Structure
WD – Withdrawal of a Pending Application

2a) If the answer to 1 is AU, CA, DI, MD, NT, OC or RE, provide the FCC Antenna Structure Registration (ASR) Number.	FCC ASR Number:
2b) If the answer to 1 is AM or WD, provide the File Number of the pending application on file.	File Number:
2c) If the answer to 1 is MD or NT, provide the date the Antenna Structure was constructed or the date it was last altered (mm/dd/yyyy).	Date:
2d) If the answer to 1 is DI, provide the date the Antenna Structure was dismantled (mm/dd/yyyy).	Date:

Antenna Structure Ownership Information

3) Select one of the entity types:

( ) Individual ( ) Unincorporated Association ( ) Trust ( ) Government Entity
( ) Corporation (**X**) Limited Liability Company ( ) General Partnership ( ) Limited Partnership
( ) Consortium ( ) Limited Liability Partnership ( ) Other: _____

4) FCC Registration Number (FRN): **0024950685**		5) Assignor FCC Registration Number (FRN):	
6) First Name (if individual):	MI:	Last Name:	Suffix:
7) Legal Entity Name (if not an individual): **TowerCo V Holdings LLC**			
8) Attention To: **TowerCo ID: KY0118**		9) P.O. Box:	**And/Or**
10a) Street Address 1: **5000 Valleystone Drive, Suite 200**	10b) Street Address 2:		
11) City: **Cary**	12) State: **NC**	13) Zip Code: **27519**	
14) Telephone Number (xxx-xxx-xxxx): **(919) 653-5700**		15) Fax Number: (xxx-xxx-xxxx): **(919) 469-5530**	
16) E-mail Address: **hbyrne@towerco.com**			

Contact Representative Information

17) First Name (if individual):	MI:	Last Name:	Suffix:
18) Business Name: **TowerCo V Holdings LLC**			
19) Attention To: **Henry Byrne**	20) P.O. Box		**And/Or**
21a) Street Address 1: **5000 Valleystone Drive, Suite 200**		21b) Street Address 2:	
22) City: **Cary**	23) State: **NC**	24) Zip Code: **27519**	
25) Telephone Number (xxx-xxx-xxxx): **(919) 653-5700**		26) Fax Number: (xxx-xxx-xxxx): **(919) 469-5530**	
27) E-mail Address: **hbyrne@towerco.com**			

Antenna Structure Information

28a) Latitude (DD-MM-SS.S): **36- 58- 16.4**		28b) North or South: **North**	
29a) Longitude (DDD-MM-SS.S): **084- 58- 53.5**		29b) East or West: **West**	
30) Street Address or Geographic Location: **Highway 1611**		31) City: **Russell Springs**	
32) County: **RUSSELL**	33) State: **KENTUCKY**		34) Zip Code: **42642**

35) Elevation of site above mean sea level (meters):	**291.1** meters
36) Overall height above ground level (AGL) of the supporting structure without appurtenances:	**77.7** meters
37) Overall height above ground level (AGL) of the antenna structure including all appurtenances:	**79.2** meters
38) Overall height above mean sea level (add items 35 and 37 together):	**370.3** meters

39a) Enter the type of structure on which the antenna will be mounted: (**LTOWER**)

B – Building
BANT – Building with Antenna on Top
BMAST – Building with Mast
BPIPE – Building with Pipe
BPOLE – Building with Pole
BRIDG – Bridge
BTWR – Building with Tower
GTOWER – Guyed Structure Used For Communication Purposes
LTOWER – Lattice Tower
MAST – Mast
MTOWER – Monopole
NNGTANN – Guyed Tower Array
NNLTANN – Lattice Tower Array
NNMTANN – Monopole Array
PIPE – Any type of Pipe
POLE – Any type of Pole
RIG – Oil or Other Type of Rig
SIGN – Any type of Sign or Billboard
SILO – Any type of Silo
STACK – Smoke Stack
TANK – Any type of Tank (water, gas, etc.)
TREE – When used as a support for an antenna
UPOLE – Utility Pole/Tower used to provide service (electric, telephone, etc.)

39b) Number of Towers in Array:	39c) Position of this Tower in the Array:
40a) Array Center Latitude (DD-MM-SS.S):	40b) North or South
41a) Array Center Longitude (DDD-MM-SS.S):	41b) East or West:

Proposed Marking and/or Lighting

42) Enter the proposed marking and/or lighting: (7)
See Form 854 Item 42 Instructions for detailed tier and lighting information.

1) None
2) Paint Only
3) Other _____
4) FAA Style B
5) FAA Style D
6) FAA Style C
7) FAA Style E
8) FAA Style F
9) FAA Style A
10) FAA Style G

FAA Notification

43) FAA Study Number:	44) Date Issued:

Environmental Compliance

45) Does the applicant request a waiver of the Commission's rules for environmental notice prior to construction due to an emergency situation?	(**No**) Yes or No
46a) If the answer to 45 is No, is another federal agency taking responsibility for environmental review of the Antenna Structure?	(**No**) Yes or No
46b) If the answer to 46a is Yes, indicate why: 1) The Antenna Structure is on Federal Land and the landholding agency is taking responsibility for the environmental review of the Antenna Structure. 2) Another federal agency has agreed with the FCC in writing to take responsibility for the environmental review of the Antenna Structure.	( ) 1 or 2
46c) If the answer to 46a is Yes, provide the name of the federal agency taking responsibility for the environmental review of the Antenna Structure.	Name:
47) If the answers to 45 and 46a are No, provide the National Notice Date for the application to be posted on the FCC's website (mm/dd/yyyy).	Date: **09/18/2025**
48) Is the applicant submitting an environmental assessment?	(**No**) Yes or No
49) Does the applicant certify that grant of Authorizations at this location would not have a significant environmental effect pursuant to Section 1.1307 of the FCC's rules?	( ) Yes or No
50) If the answer to 49 is Yes, select the basis for this certification. 1) The construction is exempt from environmental notification (other than due to another agency's review) and it does not fall within one of the categories in Section 1.1307(a) or (b) of the FCC's rules? 2) The construction is exempt from environmental notification due to another agency's review, and the other agency has issued a Finding of No Significant Impact. 3) The environmental notification has been completed, and the FCC has notified the applicant that an Environmental Assessment is not required under Section 1.1307(c) or (d) of the FCC's rules, and the Construction does not fall within one of the categories in Section 1.1307(a) or (b) of the FCC's rules. 4) The FCC has issued a Finding of No Significant Impact.	( ) 1, 2, 3, 4
51) If the answer to 50 is 3 or 4, enter the date that Local Notice was provided (mm/dd/yyyy).	Date:

Certification Statements

1) The applicant certifies that all statements made in this application and in the exhibits, attachments, or documents incorporated by reference are material, are part of this application, and are true, complete, correct, and made in good faith.
2) The applicant certifies that neither the applicant nor any other party to the application is subject to a denial of Federal benefits pursuant to Section 5301 of the Anti-Drug Abuse Act of 1988, 21 U.S.C. § 862, because of a conviction for possession or distribution of a controlled substance. See Section 1.2002(b) of the rules, 47 CFR § 1.2002(b), for the definition of "party to the application" as used in this certification.

Signature (Typed or Printed Name of Party Authorized to Sign) (For OC Applications, to be completed by Assignee)

52) First Name: **Henry**	MI:	Last Name: **Byrne**	Suffix:
53) Title: **FCC Contact**			
54) Signature: **Henry Byrne**			55) Date: **Jul 18, 2025**

Signature (Typed or Printed Name of Party Authorized to Sign) (For OC Applications, to be completed by Assignor)

56) First Name:	MI:	Last Name:	Suffix:
57) Title:			
58) Signature:			59) Date:

CK LAKE VALLEY

KY0118

HIGHWAY 1611
RUSSELL SPRINGS, KY 42642
RUSSELL COUNTY
TENANT: LEGAL BUSINESS ENTITY d/b/a VERIZON WIRELESS
"CK LAKE VALLEY"

TowerCo®

5000 VALLEYSTONE DR #200
CARY, NC 27519

NEW 255'-0" SELF SUPPORT TOWER
w/5'-0 LIGHTNING ROD
TOTAL TOWER HEIGHT 260'-0"

FROM LOUISVILLE MTSO: 2441 HOLLOWAY ROAD LOUISVILLE, KY 40299: LEAVE FROM HOLLOWAY RD. TURN LEFT ONTO SCHUTTE STATION PL. TURN LEFT ONTO BLANKENBAKER PKWY. KEEP RIGHT AT INTERSTATE HIGHWAY 64 E/I-64 E TOWARD LEXINGTON. TAKE THE I-64 E FREEWAY. FOLLOW INTERSTATE HIGHWAY 64 E/I-64 E TOWARD LEXINGTON. TAKE EXIT 48 ON THE RIGHT ONTO HIGHWAY 151 RD/KY-151 TOWARD GRAEFENBURG. TURN RIGHT ONTO HIGHWAY 151 RD/KY-151 TOWARD GRAEFENBURG. FOLLOW HIGHWAY 151 RD/KY-151. TURN RIGHT ONTO BYPASS N/US-127 BYP S. FOLLOW BYPASS N/US-127 BYP S. TURN LEFT ONTO US HIGHWAY 127 BYP/US-127 BYP S. FOLLOW US HIGHWAY 127 BYP/US-127 BYP S. TURN LEFT ONTO DANVILLE RD/US-127 S. FOLLOW DANVILLE RD/US-127 S. BEAR RIGHT AT HUSTONVILLE RD/US-127 S. FOLLOW HUSTONVILLE RD/US-127 S. TURN LEFT ONTO W HIGHWAY 76/KY-76. FOLLOW W HIGHWAY 76/KY-76. TURN LEFT ONTO E HIGHWAY 80/KY-76/KY-80. TURN RIGHT ONTO S HIGHWAY 76/KY-76. FOLLOW S HIGHWAY 76/KY-76. BEAR RIGHT AT HIGHWAY 1611/KY-1611. FOLLOW HIGHWAY 1611/KY-1611. ARRIVE AT SITE ON THE LEFT.

TOWER OWNER SITE
CK LAKE VALLEY
SITE #: KY0118

VERIZON WIRELESS SITE
CK LAKE VALLEY
PROJECT#: TBD
MARKET ID: TBD
MDG#: TBD

SITE ADDRESS
HIGHWAY 1611
RUSSELL SPRINGS, KY 42642
RUSSELL COUNTY
E911 ADDRESS: TBD

TOWER OWNER
TOWERCO
5000 VALLEYSTONE DR #200
CARY, NC 27519
CONTACT: LESLEY CORILEONE
PHONE: 813-503-2333
E-MAIL: lcordileone@towerco.com

PROPERTY OWNER
DOUGLAS K. POLSTON
235 POLSTON TOWN RD
RUSSELL SPRINGS, KY 42642
CONTACT: DOUGLAS POLSTON
PHONE: 270-566-2863
E-MAIL: TBD

POLICE
RUSSELL COUNTY SHERIFF
410 MONUMENT SQ STE 109
JAMESTOWN, KY 42629
PHONE: 270-343-2191

FIRE
RUSSELL SPRINGS FIRE DEPARTMENT
72 HIGH ST
RUSSELL SPRING, KY 42642
PHONE: 270-866-3158

GENERAL INFORMATION
LATITUDE - 36° 58' 16.42" N
LONGITUDE - 84° 58' 53.50" W
1983 (NAD83)

ELEVATION - 955.2' AMSL
1988 (NAVD88)

TOWER OWNER LEASE AREA
100'-0"x100'-0"
(10000 SF)

VERIZON WIRELESS LEASE AREA
12'-0"x30'-0"
(360 SF)

PROJECT TOTAL DISTURBED AREA
COMPOUND: (5625 SF) = (0.129 ACRE)
ACCESS DRIVE: (2400 SF) = (0.055 ACRE)
GROSS AREA: (8025 SF) = (0.184 ACRE)

ALL CONSTRUCTION ITEMS ARE TO BE COMPLETED BY THE TOWER OWNER GENERAL CONTRACTOR UNLESS NOTED AS (VZW GC) WHICH SHALL BE COMPLETED BY THE VERIZON WIRELESS GENERAL CONTRACTOR

PROJECT SUMMARY

PROJECT DESCRIPTION:
NOTE: ALL ITEMS WITHIN THESE CONSTRUCTION DOCUMENTS ARE BY TOWER OWNER'S GENERAL CONTRACTOR AND HIS SUB-CONTRACTORS UNLESS NOTED AS (VZW GC) WHICH SHALL INCLUDE VERIZON WIRELESS GENERAL CONTRACTOR AND HIS SUB-CONTRACTORS. GENERALLY DESCRIBED BELOW:

TOWER OWNER SCOPE:
- INSTALL A NEW 255'-0" SELF SUPPORT TOWER w/ 5'-0 LIGHTNING ROD (TOTAL 260'-0")
- INSTALL A NEW TOWER FOUNDATION SYSTEM
- INSTALL A NEW 75' X 75' FENCED GRAVEL COMPOUND
- INSTALL A NEW ELECTRICAL SERVICE RUN TO SITE UTILITY H-FRAME
- INSTALL A NEW GRAVEL ACCESS DRIVE
- NO WATER OR SEWAGE SERVICES RUN TO SITE
- INSTALL NEW TOWER & SITE GROUNDING SYSTEM
- INSTALL NEW VZW SUBSURFACE GROUNDING SYSTEM
- INSTALL A NEW VZW CONCRETE EQUIPMENT AND GENERATOR PADS
- INSTALL VZW ICE BRIDGE AND FOUNDATIONS
- INSTALL VZW EQUIPMENT H-FRAME AND FOUNDATIONS
- INSTALL ELECTRICAL SERVICE CONDUIT WITH PULL TAPES FROM ILC ENCLOSURE STUB-UP TO UTILITY H-FRAME
- INSTALL NEW CONDUITS WITH PULL TAPES FROM VZW ILC STUB-UP LOCATION TO THE GENERATOR STUB-UP AT VZW GENERATOR PAD
- INSTALL (2) 1-1/4" SMOOTHWALL SDR-11 HDPE FIBER OPTIC CONDUITS W/PULL TAPES AND TRACER WIRE FROM "VERIZON WIRELESS ONLY" HAND HOLE OUTSIDE COMPOUND TO VZW EQUIPMENT PAD
- INSTALL (3) NEW "VERIZON WIRELESS ONLY" 1-1/4" SMOOTHWALL SDR-11 HDPE FIBER OPTIC CONDUITS WITH PULL TAPES AND TRACER WIRE FROM NEW "VERIZON WIRELESS ONLY" 24"X36" HAND HOLE OUTSIDE COMPOUND TO NEW "VERIZON WIRELESS ONLY" 24"X36" HAND HOLE AT R.O.W.
- PERMANENT ELECTRIC POWER MUST BE AVAILABLE FOR VERIZON WIRELESS AT THE METER BASE PRIOR TO THE SITE BEING RELEASED AS TENANT READY.

VERIZON WIRELESS SCOPE (VZW GC):
- INSTALL VZW PREFABRICATED CANOPY AND FOUNDATIONS
- INSTALL VZW ANTENNA MOUNTING SUPPORT STRUCTURE ON TOWER
- INSTALL VZW ANTENNAS, LINES, COAX, GPS ANTENNA AND RADIO EQUIPMENT
- INSTALL EXISTING SUBSURFACE GROUND LEADS TO VZW EQUIPMENT & FACILITIES
- INSTALL VZW ELECTRIC SERVICE CONDUCTORS FROM UTILITY H-FRAME TO VZW ILC ENCLOSURE
- INSTALL NEW CONDUITS WITH PULL TAPES FROM RF CABINET TO OVP H-FRAME LIT FIBER LOCATION
- INSTALL NEW CONDUITS AND CIRCUITS FROM VZW ILC ENCLOSURE TO EQUIPMENT ENCLOSURES AT VZW EQUIPMENT PAD
- INSTALL VZW GENERATOR CIRCUITS FROM VZW ILC & EQUIPMENT ENCLOSURES TO VZW GENERATOR
- INSTALL NEW OUTDOOR OVPs AND CABLING ON VERIZON EQUIPMENT H-FRAME

PROJECT DESCRIPTION

ALL WORK AND MATERIALS SHALL BE PERFORMED AND INSTALLED IN ACCORDANCE WITH THE CURRENT EDITIONS OF THE FOLLOWING CODES AS ADOPTED BY THE LOCAL GOVERNING AUTHORITIES. NOTHING IN THESE PLANS IS TO BE CONSTRUCTED TO PERMIT WORK NOT CONFORMING TO THESE CODES.

BUILDING CODE	2018 KENTUCKY BUILDING CODE (IBC 2015)
STRUCTURAL CODE	TIA/EIA-222 - REVISION G (INCLUDES ADDENDUM #2)
MECHANICAL CODE	2015 INTERNATIONAL MECHANICAL CODE (IMC 2015)
PLUMBING CODE	KENTUCKY STATE PLUMBING CODE (815 KAR CHAP. 20)
ELECTRICAL CODE	2017 NATIONAL ELECTRICAL CODE (NEC) - NFPA 70
FIRE/LIFE SAFETY CODE	2015 INTERNATIONAL FIRE CODE (2015 IFC)
ENERGY CODE	2012 INTERNATIONAL ENERGY CODE (COMMERCIAL)
GAS CODE	2012 NATIONAL FUEL GAS CODE (NFPA 54)

ACCESSIBILITY REQUIREMENTS:
FACILITY IS UNMANNED AND NOT FOR HUMAN HABITATION. HANDICAPPED ACCESS REQUIREMENTS ARE NOT REQUIRED IN ACCORDANCE WITH THE 2015 IBC BUILDING CODE.

APPLICABLE CODES

SURVEYOR
THE LAND CONSULTANTS, LLC
2820 15TH AVE SW
HUNTSVILLE, AL 35805
PHONE: 423-304-6722

ARCHITECTURAL
TELECAD WIRELESS
1961 NORTHPOINT BLVD, STE 130
HIXSON, TN 37343
CONTACT: MATT BATES
PHONE: 423-843-9500
EMAIL: matt.bates@telecadeng.com

ELECTRICAL
SOUTH KY REC
ADDRESS: 780 N MAIN ST
MONTICELLO, KY 42633
CONTACT: TBD
PHONE: 606-348-6771
EMAIL: TBD

ELECTRICAL UTILITY COORDINATION IS NOT FINALIZED. DO NOT PROCEED WITH CONSTRUCTION.

CONSULTANT TEAM

SHEET NUMBER	DESCRIPTION
T-1	TITLE SHEET
	SURVEY PLAN
ASR	ASR COUNTY MAP
Z-1	OVERALL SITE PLAN w/AERIAL OVERLAY
Z-2	OVERALL SITE PLAN w/EQUIPMENT PAD DISTANCE TO PROPERTY LINES
Z-3	GRADING AND E&S CONTROL PLAN
Z-4	DIMENSIONED SITE PLAN
Z-5	TOWER ELEVATION
Z-6	SITE DETAILS
Z-7	FENCE DETAILS AND NOTES
Z-8	TOWER OWNER SIGNAGE

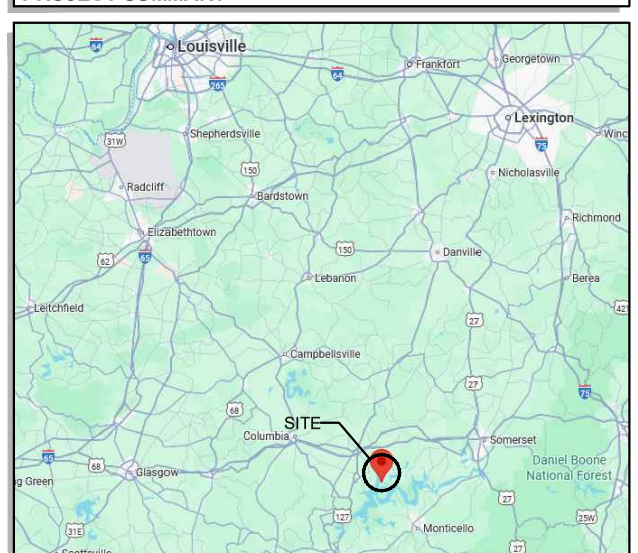

VICINITY MAP

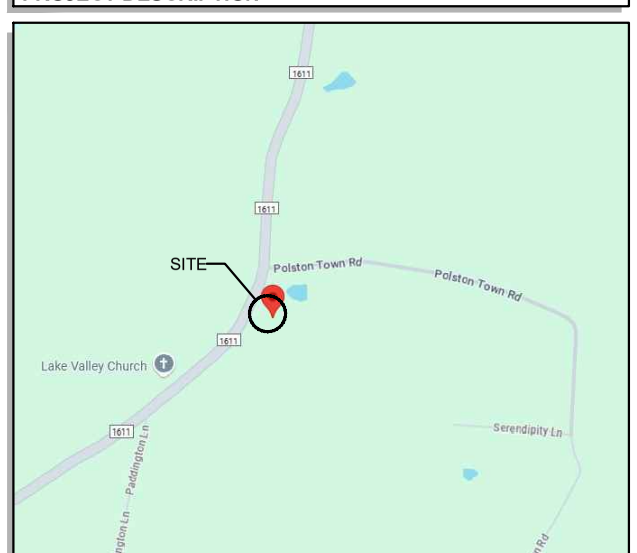

LOCATION MAP

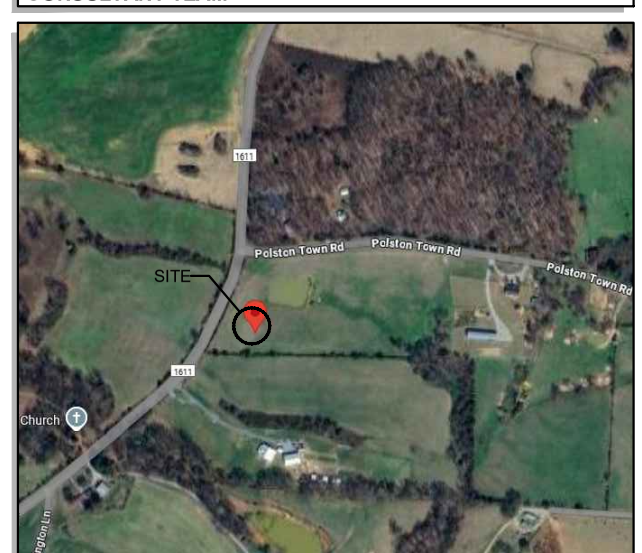

AERIAL

FROM RUSSELL COUNTY CLERK: LEAVE FROM LEWIS ALY. TURN LEFT ONTO S MAIN ST/KY-92. AT THE ROUNDABOUT TAKE THE SECOND EXIT ONTO N MAIN ST/US-127 BUS N/KY-92. KEEP STRAIGHT ON AT N MAIN ST/US-127 N. FOLLOW N MAIN ST/US-127 N. TURN RIGHT ONTO MAPLE ST/KY-619. TURN LEFT ONTO DOWELL RD. TURN RIGHT ONTO E STEVE WARINER DR/KY-80. TURN RIGHT ONTO HIGHWAY 910/KY-910. BEAR RIGHT AT S HIGHWAY 76/KY-76. FOLLOW S HIGHWAY 76/KY-76. BEAR RIGHT AT HIGHWAY 1611/KY-1611. FOLLOW HIGHWAY 1611/KY-1611. ARRIVE AT SITE ON THE LEFT.

DIRECTIONS FROM COUNTY SEAT

PREPARED FOR:
TowerCo®
5000 VALLEYSTONE DR #200
CARY, NC 27519

PREPARED BY:
TeleCAD Wireless
1961 NORTHPOINT BLVD, SUITE 130
HIXSON, TN 37343
PH: 423-843-9500
FAX: 423-843-9509

DRAWING NOTICE:

DRAWN BY:	JAE
CHECKED BY:	DS

REVISIONS

NO.	DATE	BY	DESCRIPTION
0	09/08/25	JAE	ZONING ISSUE
B	08/11/25	JAE	PRELIMINARY REVIEW
A	07/29/25	JAE	PRELIMINARY REVIEW

ENGINEER'S STAMP:
STATE OF KENTUCKY
STEPHEN E. HUNT
25003
LICENSED PROFESSIONAL ENGINEER
NOT VALID WITHOUT P.E. STAMP & SIGNATURE

SITE NAME: CK LAKE VALLEY
ADDRESS: HIGHWAY 1611 RUSSELL SPRINGS, KY 42642
COUNTY: RUSSELL
LATITUDE: 36° 58' 16.42" N
LONGITUDE: 84° 58' 53.50" W
SITE NUMBER: KY0118

SHEET TITLE: TITLE SHEET

DRAWING NO.	REVISION:
T-1	0

GENERAL NOTES:

1. This Survey is prepared exclusively to show site conditions and/or for use in support of instruments related to Leases and Easements as may be shown hereon. Any property boundary information shown hereon is a composite of information gathered from current or previous Surveys, Plat & Deed Description and/or Assessor's Tax Maps as may be referenced hereon. This Survey is not a Boundary Survey of any Tax Parcels or Deed Tracts, and does not create, combine, or divide any existing properties.
2. Survey shown hereon was performed under the supervision of a state-registered Land Surveyor and conforms to all applicable State Board Requirements.
3. Instruments Used: One or more of: Topcon Total Station, Topcon Hiperlite Plus GPS, Carlson Surveyor Data Collector, DJI UAV.
4. Where shown, improvements (utilities, buildings, trees, fences, etc.) are based on field Survey and/or aerial mapping.
5. Any Underground Utilities shown according to surface markings made by others, found at time of survey. Additional marked utilities outside the area covered by this survey map may be shown in provided CAD Files. Utility Markings may not be comprehensive, and conditions may change after the time of survey: this survey does not relieve design and construction personnel of the responsibility to determine the locations of underground utilities prior to land disturbance activities. See also 2021 ALTA Standards, page 10, "Note to clients...".
6. This Survey is presented in the format required by Clients. Clients are advised that Official Jurisdictions may require the Survey to be presented in another format with additional notes and certifications. In the event other formats, notes or certifications are requested by applicable jurisdictions, it is the responsibility of the Client to request same be prepared by Surveyor. Survey as published is not intended to be suitable for recording as a Subdivision Plat.
7. This survey may have been reduced or enlarged in size due to subsequent reproduction. This should be taken into consideration when obtaining scaled data.
8. Geographic Coordinates, if published, meet FAA Accuracy Code 1A, and are accurate to within ± 20 feet horizontally and to within ± 3 feet vertically.
9. Any Flood Zone information presented hereon is according to current FEMA Flood Map information as may be referenced hereon. No Flood Elevation Survey of Certification performed.
10. This survey is not valid without the original signature seal of a State-Licensed Land Surveyor, and is not complete without the total of sheets as specified in Survey Title Blocks.
11. Unless indicated otherwise by reference to Record Instruments, any Lessee's Leases, Premises or Easements shown hereon are NOT YET OF RECORD and may be subject to change pending review and approval by Carrier, applicable jurisdictions and/or other involved parties.
12. Any Survey Markers placed as required by Standards of Practice and/or Client request represent the Leases and/or Easements as requested or designed by Clients at the time of this survey issue and may not reflect changes to site design which have not been communicated to Surveyor in the form of a Survey revision request. Surveyor shall not be liable for any circumstance arising as a result of revisions to Site Design (which may invalidate existing survey markers) occurring after the date of this Survey issue.

SURVEYOR'S CERTIFICATION

To: TowerCo:

I hereby certify that this survey was completed in accordance with the current requirements of the Standards of Practice for Surveying in the State of Kentucky to the best of my knowledge, information, and belief.

STATE of KENTUCKY
TRAVIS L. SHIELDS
06/18/25
4246
LICENSED
PROFESSIONAL
LAND SURVEYOR

Travis L. Shields
Kentucky PLS
License No. 4246

PROPOSED TOWER LOCATION DATA

Latitude:	NORTH:	36.971228°	36° 58' 16.42"
Longitude:	WEST:	84.981527°	84° 58' 53.50"
Ground Elev:	955.2	FEET AMSL	(NAVD88)
Benchmark:	DK3326 KYTH		

PARENT TAX PARCEL

DOUGLAS K. POLSTON
TAX PARCEL: 065-00-00-014.01

NORTH ORIENTATION

KENTUCKY SOUTH STATE PLANE COORDINATE SYSTEM
Based on GPS Survey relative to NGS CORS Network, NAD83 (2011)
ELEVATION DATUM: NAVD88, GEOID 12B
DATE OF SURVEY: 06-10-25

Method: RTK (CORS); Confidence Level: 95%
Positional Accuracy: HZ ± 0.10'
EPOCH 2010.0000
Convergence: 0.46605000°; Combined Factor: 0.99992453

FLOOD DATA

FEMA FLOOD MAP PANEL: 21207C0230C, Effective Date: 08-19-2010
Surveyed Area appears to lie within: ZONE X (Areas of Minimal Flood Hazard)

TITLE EXAMINATION:

Not available

SURVEY ISSUE DATA

#	DETAILS	DATE	DRAWN	APP
0	Original Survey Issue	06-18-2025	NB	TLS

LOCATION MAP

NOT TO SCALE

SURVEY MAP LEGEND

- IRON ROD FOUND (AS NOTED)
- UTILITY POLE
- TELECOM JUNCTION
- CENETR OF EXISTING TOWER
- SITE BENCHMARK

R/W	RIGHT-OF-WAY
C/L	CENTER LINE
AU	ACCESS & UTILITY
AUF	ACCESS/UTILITY FIBER
ESMT	EASEMENT
P.O.C.	POINT OF COMMENCEMENT
P.O.B.	POINT OF BEGINNING
Sq Ft	SQUARE FEET

- PAVEMENT EDGE
- FENCE
- POND
- OVERHEAD UTILITY LINES (OHU)
- 5' CONTOURS
- 1' CONTOURS
- PUBLIC R/W (RW)
- TAX PARCEL BOUNDARY
- TIE LINE
- LESSEE'S PREMISES
- LESSEE'S EASEMENTS

THE LAND CONSULTANTS LLC
2820 15TH AVE SW
HUNTSVILLE, AL 35805
423·304·6722

PREPARED FOR

TowerCo®

TOWERCO
5000 Valleystone Drive # 200,
Cary NC 27519

(Not a Boundary Survey of Parent Lands. Not intended for fee simple Land Transfer)

SITE SURVEY
CK LAKE VALLEY

Site Number: KY0118
Highway 1611, Russell Springs, KY 42642
Russell County, Kentucky

COVER SHEET

DWG#: 25191
ISSUE #: 0
ISSUE DATE: 06-18-2025
SEE SHEET #1

PROPERTY INFORMATION

PARENT TAX PARCEL

A. DOUGLAS K. POLSTON
TAX PARCEL: 065-00-00-014.01
DEED BOOK 345, PAGE 221

ADJOINING TAX PARCELS

B. WILLIAM AREHART
TAX PARCEL: 065-00-00-035.05
DEED BOOK 368, PAGE 541

C. CYNTHIA SUE KING ...
TAX PARCEL: 065-00-00-013.11
DEED BOOK 375, PAGE 221

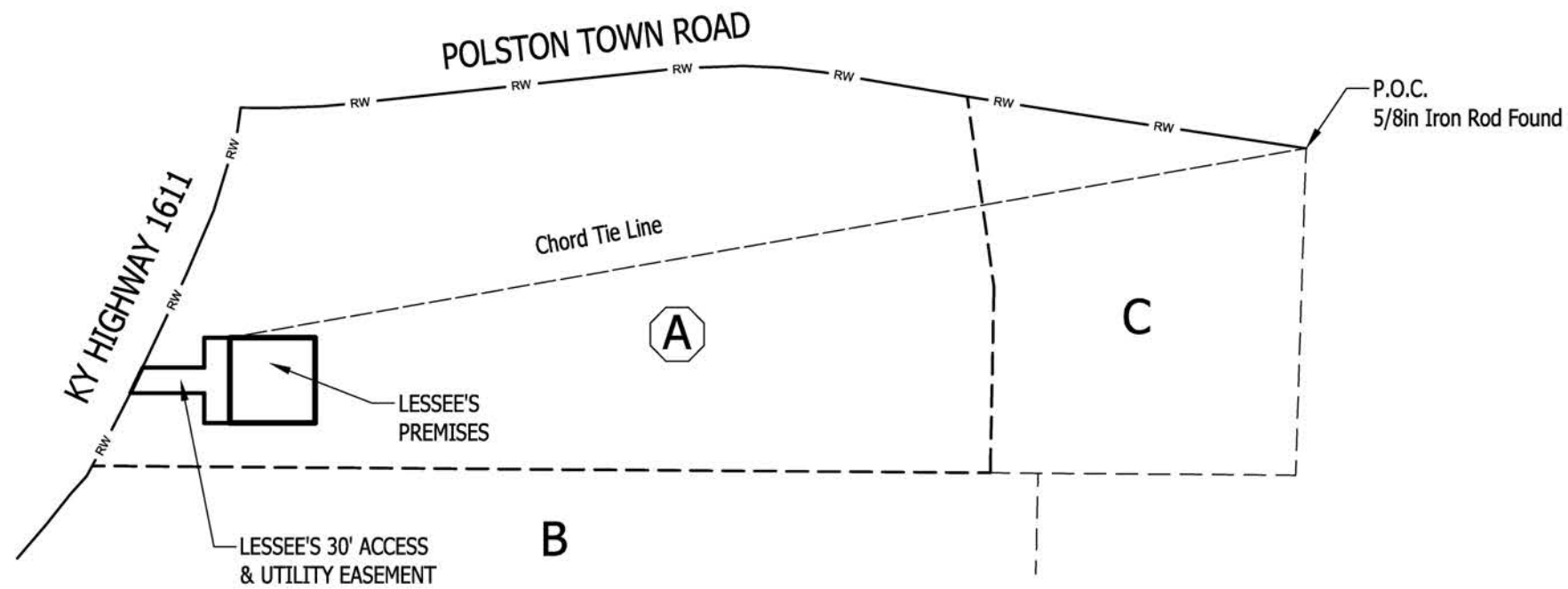

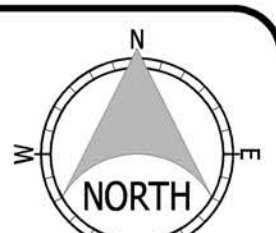

THE LAND CONSULTANTS LLC
2820 15TH AVE SW
HUNTSVILLE, AL 35805
423·304·6722

PREPARED FOR

TowerCo®

TOWERCO
5000 Valleystone Drive # 200,
Cary NC 27519

(Not a Boundary Survey of Parent Lands. Not intended for fee simple Land Transfer)

SITE SURVEY
CK LAKE VALLEY
Site Number: KY0118
Highway 1611, Russell Springs, KY 42642
Russell County, Kentucky

OVERVIEW MAP LEGEND

- RW — PUBLIC R/W
- VESTING LAND
- ADJOINING TAX PARCEL
- TIE LINE
- LESSEE'S PREMISES
- LESSEE'S EASEMENT(S)

APPROX SCALE: 1in = 200'

0 200' 400' 600'

OVERVIEW MAP CAVEAT:
OVERVIEW MAP IS NOT A SURVEY BUT A VICINITY / LOCATION MAP INTENDED ONLY TO SHOW SURVEYED PROPERTY IN RELATION TO SURROUNDING AREA. VESTING AND ADJOINING PARCEL BOUNDARIES ARE NOT INCLUDED IN OR CERTIFIED BY THIS SURVEY. BOUNDARY LINES ARE A COMPOSITE OF DEED, PLAT AND/OR TAX MAP INFORMATION
SEE SURVEY MAP FOR ALL MATTERS RELATED TO SITE SURVEY

OVERVIEW MAP

DWG#: 25191
ISSUE #: 0
ISSUE DATE: 06-18-2025
SEE SHEET #1

STATE of KENTUCKY
TRAVIS L SHIELDS
06/18/25
4246
LICENSED
PROFESSIONAL
LAND SURVEYOR

LINE DATA TABLE		
LINE	BEARING	DISTANCE
L1	DUE EAST	100.00'
L2	DUE SOUTH	100.00'
L3	DUE WEST	100.00'
L4	DUE NORTH	100.00'
L5	DUE SOUTH	100.00'
L6	DUE WEST	30.00'
L7	DUE NORTH	35.00'
L8	DUE WEST	86.79'
L9	N 25°39'02" E	33.28'
L10	DUE EAST	72.38'
L11	DUE NORTH	35.00'
L12	DUE EAST	30.00'

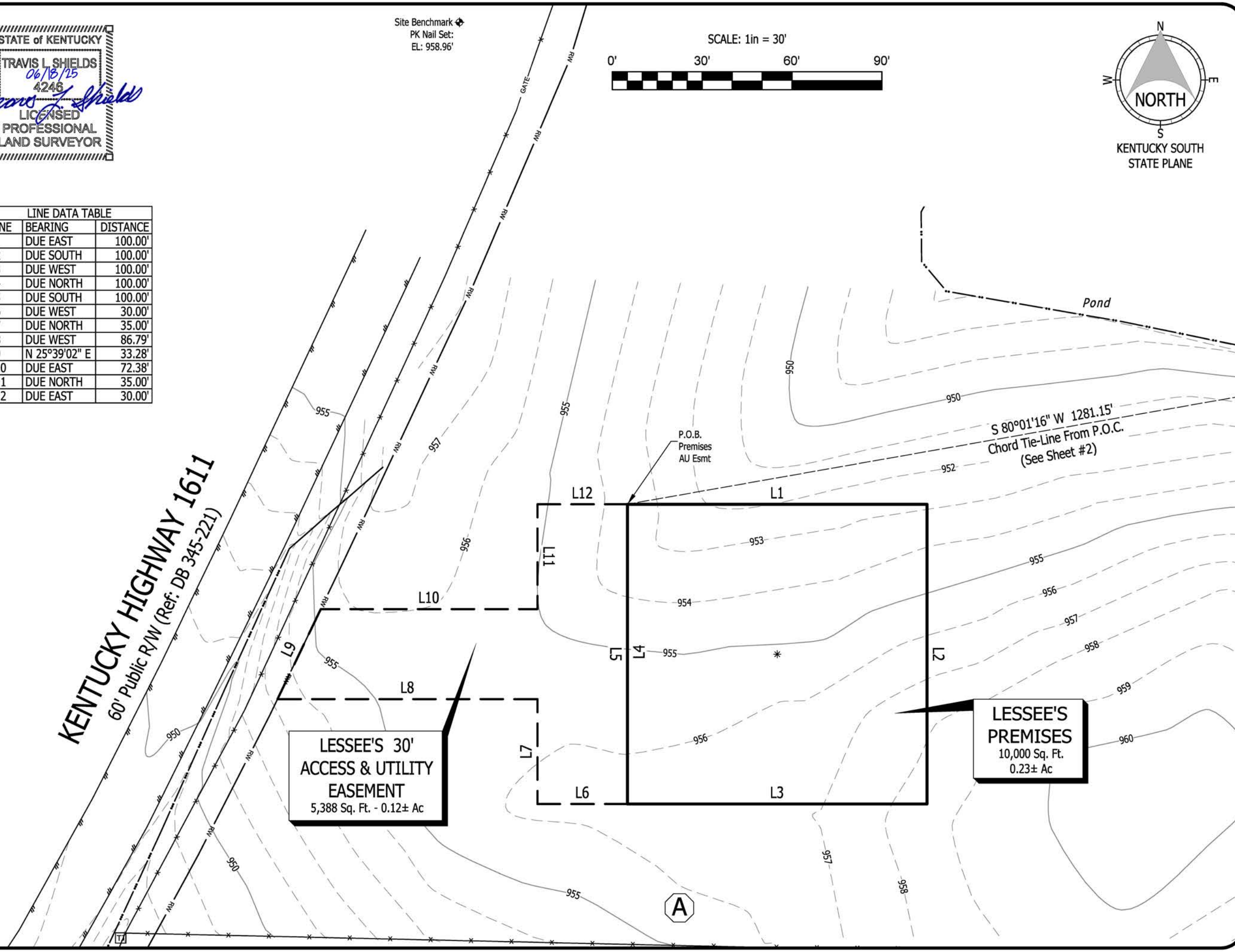

THE LAND CONSULTANTS LLC
2820 15TH AVE SW
HUNTSVILLE, AL 35805
423·304·6722

PREPARED FOR

TowerCo®

TOWERCO
5000 Valleystone Drive # 200,
Cary NC 27519

(Not a Boundary Survey of Parent Lands. Not intended for fee simple Land Transfer)

SITE SURVEY
CK LAKE VALLEY

Site Number: KY0118
Highway 1611, Russell Springs, KY 42642
Russell County, Kentucky

SITE SURVEY

DWG#: 25191
ISSUE #: 0
ISSUE DATE: 06-18-2025
SEE SHEET #1

SHEET 3 OF 4

LESSEE'S PREMISES

All that tract or parcel of land lying and being in Russell County, Kentucky, and being a portion of the property of Douglas K. Polston, of record in Deed Book 345, Page 221, Russell County Court Clerk's Office, and being more particularly described as follows:

COMMENCE at a five-eighths-inch Iron Rod found at the Northeast Corner of the property of record in Deed Book 375, Page 221, said Records;
Thence along a Chord Tie Line having a Bearing of S 80°01'16" W, a distance of 1,281.15 feet to the POINT OF BEGINNING;

Thence DUE EAST, a distance of 100.00 feet;
Thence DUE SOUTH, a distance of 100.00 feet;
Thence DUE WEST, a distance of 100.00 feet;
Thence DUE NORTH, a distance of 100.00 feet to the POINT OF BEGINNING.

Said Premises contains 0.23 Acres (10,000 Square Feet), more or less.

LESSEE'S 30' ACCESS & UTILITY EASEMENT

All that tract or parcel of land lying and being in Russell County, Kentucky, and being a portion of the property of Douglas K. Polston, of record in Deed Book 345, Page 221, Russell County Court Clerk's Office, and being more particularly described as follows:

COMMENCE at a five-eighths-inch Iron Rod found at the Northeast Corner of the property of record in Deed Book 375, Page 221, said Records;
Thence along a Chord Tie Line having a Bearing of S 80°01'16" W, a distance of 1,281.15 feet to the POINT OF BEGINNING;

Thence DUE SOUTH, a distance of 100.00 feet;
Thence DUE WEST, a distance of 30.00 feet;
Thence DUE NORTH, a distance of 35.00 feet;
Thence DUE WEST, a distance of 86.79 feet to a point on the Eastern Right-of-Way Line of Kentucky Highway 1611;
Thence N 25°39'02" E, along said Right-of-Way Line, a distance of 33.28 feet;
Thence DUE EAST, leaving said Right-of-Way Line, a distance of 72.38 feet;
Thence DUE NORTH, a distance of 35.00 feet;
Thence DUE EAST, a distance of 30.00 feet to the POINT OF BEGINNING.

Said Easement contains 0.12 Acres (5,388 Square Feet), more or less.

STATE of KENTUCKY
TRAVIS L SHIELDS
06/18/25
4246
LICENSED
PROFESSIONAL
LAND SURVEYOR

THE LAND CONSULTANTS LLC
2820 15TH AVE SW
HUNTSVILLE, AL 35805
423·304·6722

PREPARED FOR

TowerCo®

TOWERCO
5000 Valleystone Drive # 200,
Cary NC 27519

(Not a Boundary Survey of Parent Lands. Not intended for fee simple Land Transfer)

SITE SURVEY
CK LAKE VALLEY

Site Number: KY0118
Highway 1611, Russell Springs, KY 42642

Russell County, Kentucky

DESCRIPTIONS

DWG#: 25191
ISSUE #: 0
ISSUE DATE: 06-18-2025
SEE SHEET #1

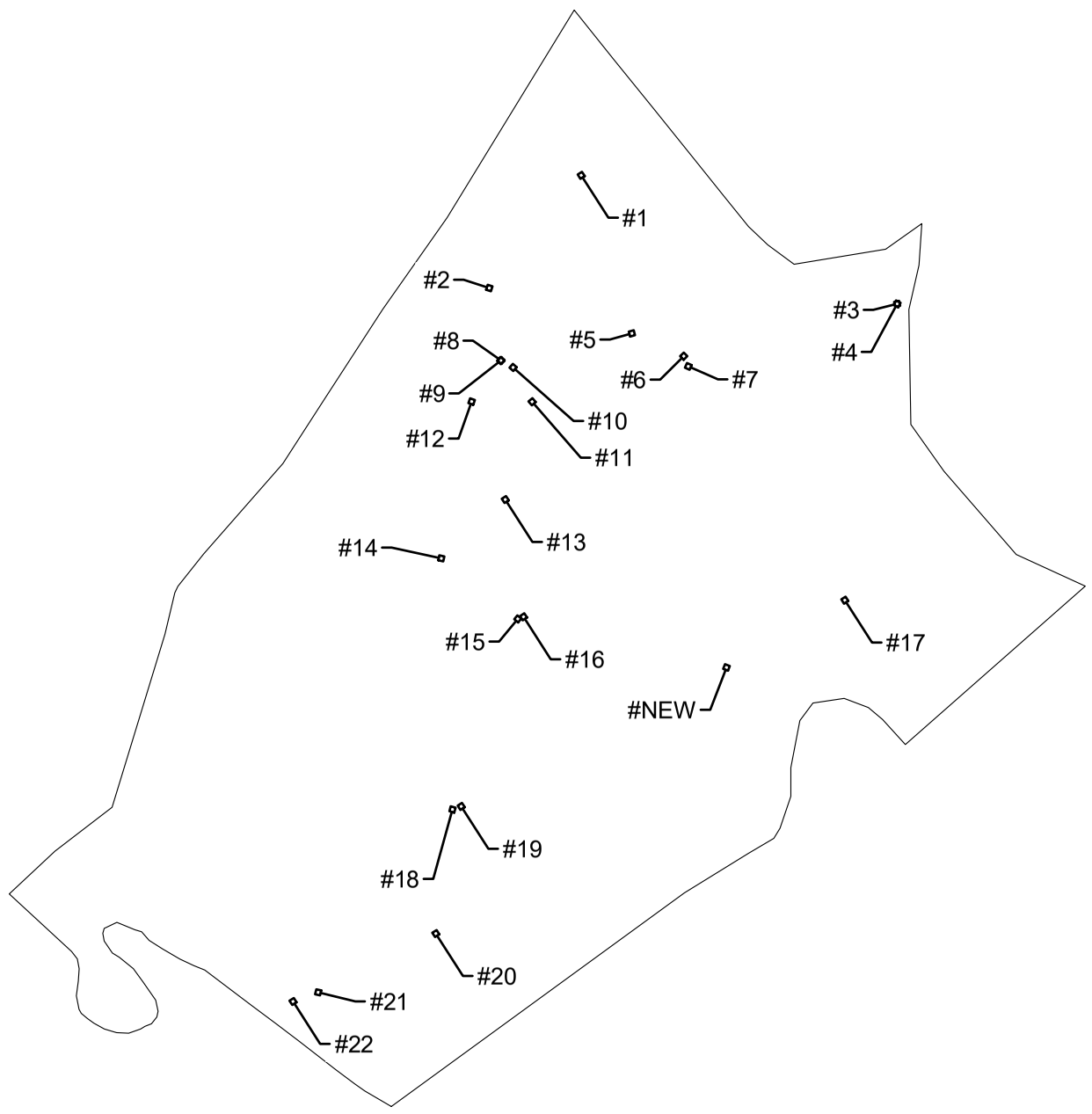

RUSSELL COUNTY

FCC REGISTERED TOWERS

TOWER	TOWER OWNER	ASR	LATITUDE	LONGITUDE
1	CELLCO PARTNERSHIP	1257754	37° 7'44.70"N	85° 2'39.70"W
2	HAMMOND BROADCASTING INC	1065125	37° 5'39.00"N	85° 4'49.00"W
3	UNITI TOWERS LLC	1318405	37° 5'25.30"N	84°54'43.80"W
4	SBA INFRASTRUCTURES, LLC	1232264	37° 5'19.70"N	84°54'47.30"W
5	CTI ASSETS II, LLC	1309775	37° 4'40.80"N	85° 1'23.50"W
6	SBA TOWERS VII, LLC	1257488	37° 4'19.50"N	84°59'59.40"W
7	TILLMAN INFRASTRUCTURE, LLC	1321407	37° 4'6.80"N	84°59'55.80"W
8	UNITI TOWERS LLC	1316896	37° 4'7.30"N	85° 4'37.40"W
9	HARMONI TOWERS LLC	1319987	37° 4'7.30"N	85° 4'37.40"W
10	SBA INFRASTRUCTURES, LLC	1232919	37° 3'51.90"N	85° 4'19.50"W
11	GLOBAL TOWER, LLC. THROUGH AMERICAN TOWERS, LLC	1013822	37° 3'21.00"N	85° 3'45.00"W
12	DUO COUNTY TELEPHONE COOPERATIVE CORPORATION, INC.	1060800	37° 3'15.40"N	85° 5'14.80"W
13	HOOVER, MAE DBA = LAKE CUMBERLAND BROADCASTERS	1043881	37° 1'31.00"N	85° 4'23.00"W
14	RUSSELL COUNTY AIRPORT	1272430	37° 0'20.00"N	85° 5'59.00"W
15	SBA INFRASTRUCTURES, LLC	1249806	36°59'14.90"N	85° 4'3.00"W
16	UNITI TOWERS LLC	1316461	36°59'15.30"N	85° 4'2.00"W
17	CELLCO PARTNERSHIP	1259175	36°59'34.10"N	84°56'3.70"W
18	SBA TOWERS III LLC	1261129	36°55'30.60"N	85° 5'33.60"W
19	TILLMAN INFRASTRUCTURE, LLC	1321265	36°55'26.20"N	85° 5'37.90"W
20	CELLCO PARTNERSHIP	1254846	36°53'3.20"N	85° 6'5.40"W
21	US ARMY CORPS OF ENGINEERS	1289489	36°51'48.80"N	85° 8'57.50"W
22	SBA TOWERS III LLC	1261117	36°51'35.70"N	85° 9'37.10"W
NEW	TOWERCO VI, LLC	TBD	36° 58' 16.42"N	84° 58' 53.50"W

PREPARED FOR:

TowerCo®

5000 VALLEYSTONE DR #200
CARY, NC 27519

PREPARED BY:

TeleCAD Wireless

1961 NORTHPOINT BLVD, SUITE 130
HIXSON, TN 37343
PH: 423-843-9500
FAX: 423-843-9509

DRAWING NOTICE:

THE INFORMATION CONTAINED IN THIS SET OF DOCUMENTS IS PROPRIETARY BY NATURE. ANY USE OR DISCLOSURE OTHER THAN THAT WHICH RELATES TO THE CLIENT IS STRICTLY PROHIBITED.

DRAWN BY:	JAE
CHECKED BY:	DS

REVISIONS

NO.	DATE	BY	DESCRIPTION
0	09/08/25	JAE	ZONING ISSUE
B	08/11/25	JAE	PRELIMINARY REVIEW
A	07/29/25	JAE	PRELIMINARY REVIEW

ENGINEER'S STAMP:

STATE OF KENTUCKY
STEPHEN E. HUNT
25003
LICENSED PROFESSIONAL ENGINEER

NOT VALID WITHOUT P.E. STAMP & SIGNATURE

SITE NAME:
CK LAKE VALLEY

ADDRESS:
HIGHWAY 1611
RUSSELL SPRINGS, KY 42642

COUNTY:
RUSSELL

LATITUDE:
36° 58' 16.42" N

LONGITUDE:
84° 58' 53.50" W

SITE NUMBER:
KY0118

SHEET TITLE:
OVERALL SITE PLAN

DRAWING NO.	REVISION:
ASR	0

Kentucky 811
Know what's below.
Call before you dig.
Call Monday thru Friday – 7 am. to 6 pm.
1-800-752-6007
PER KENTUCKY STATE LAW, IT IS AGAINST THE LAW TO EXCAVATE WITHOUT NOTIFYING THE UNDERGROUND LOCATION SERVICE TWO (2) WORKING DAYS BEFORE COMMENCING WORK.

OVERALL SITE PLAN
w/AERIAL OVERLAY

NORTH

0' 200' 400'
SCALE: 1" = 200'

PREPARED FOR:

TowerCo®

5000 VALLEYSTONE DR #200
CARY, NC 27519

PREPARED BY:

TeleCAD Wireless

1961 NORTHPOINT BLVD, SUITE 130
HIXSON, TN 37343
PH: 423-843-9500
FAX: 423-843-9509

DRAWING NOTICE:

DRAWN BY:	JAE
CHECKED BY:	DS

REVISIONS

NO.	DATE	BY	DESCRIPTION
0	09/08/25	JAE	ZONING ISSUE
B	08/11/25	JAE	PRELIMINARY REVIEW
A	07/29/25	JAE	PRELIMINARY REVIEW

ENGINEER'S STAMP:

STATE OF KENTUCKY
STEPHEN E. HUNT
25003
LICENSED PROFESSIONAL ENGINEER

NOT VALID WITHOUT P.E. STAMP & SIGNATURE

SITE NAME:	CK LAKE VALLEY
ADDRESS:	HIGHWAY 1611 RUSSELL SPRINGS, KY 42642
COUNTY:	RUSSELL
LATITUDE:	36° 58' 16.42" N
LONGITUDE:	84° 58' 53.50" W
SITE NUMBER:	KY0118
SHEET TITLE:	OVERALL SITE PLAN
DRAWING NO.:	Z-1
REVISION:	0

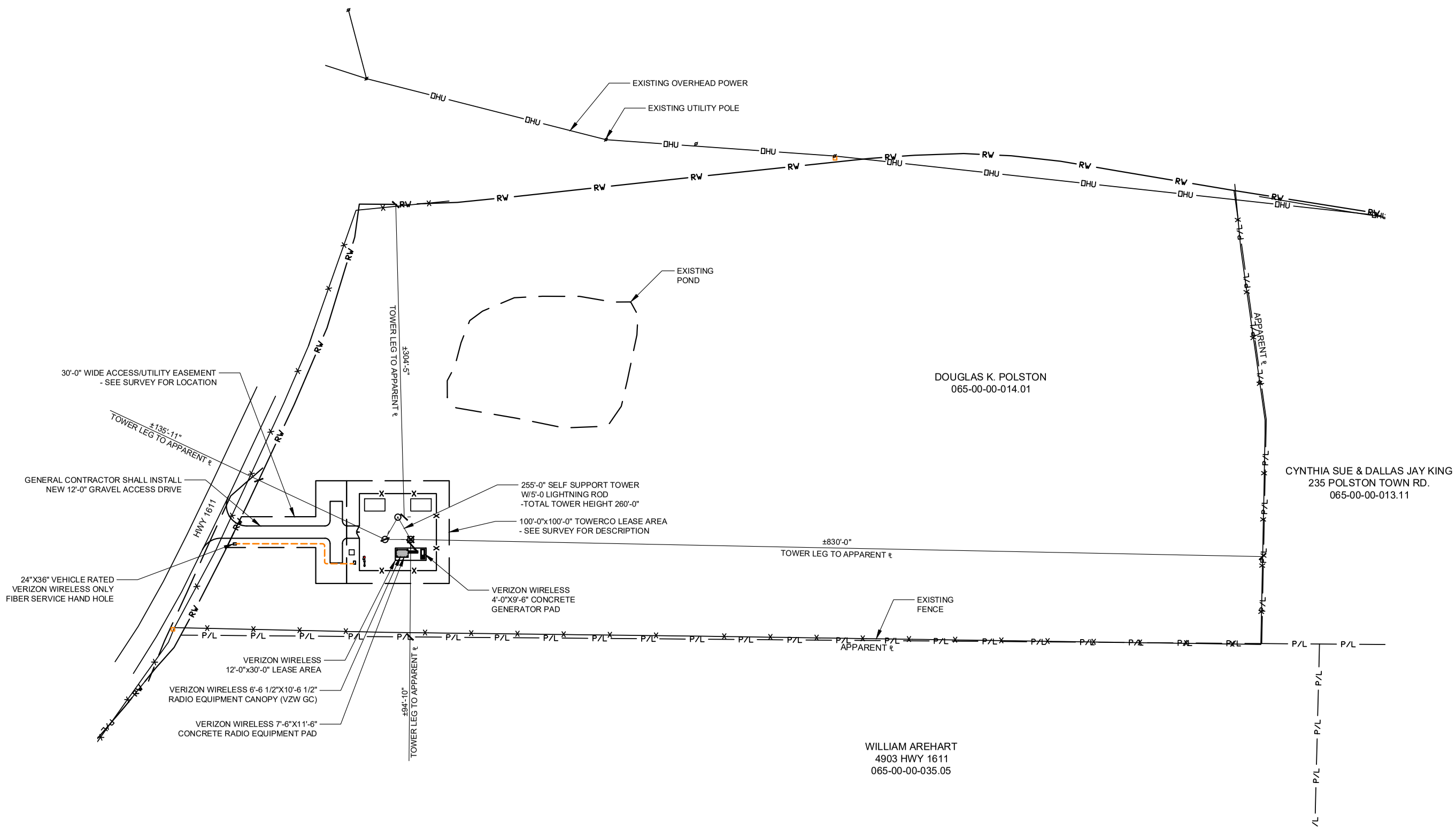

Kentucky 811
Know what's below.
Call before you dig.
Call Monday thru Friday – 7 am. to 6 pm.
1-800-752-6007
PER KENTUCKY STATE LAW, IT IS AGAINST THE LAW TO EXCAVATE WITHOUT NOTIFYING THE UNDERGROUND LOCATION SERVICE TWO (2) WORKING DAYS BEFORE COMMENCING WORK.

OVERALL SITE PLAN w/ TOWER LEG DISTANCE TO PROPERTY LINES

NORTH

0' 100' 200'
SCALE: 1" = 100'

PREPARED FOR:
TowerCo®
5000 VALLEYSTONE DR #200
CARY, NC 27519

PREPARED BY:
TeleCAD Wireless
1961 NORTHPOINT BLVD, SUITE 130
HIXSON, TN 37343
PH: 423-843-9500
FAX: 423-843-9509

DRAWN BY:	JAE
CHECKED BY:	DS

REVISIONS

NO.	DATE	BY	DESCRIPTION
0	09/08/25	JAE	ZONING ISSUE
B	08/11/25	JAE	PRELIMINARY REVIEW
A	07/29/25	JAE	PRELIMINARY REVIEW

ENGINEER'S STAMP:
STATE OF KENTUCKY
STEPHEN E. HUNT
25003
LICENSED PROFESSIONAL ENGINEER
NOT VALID WITHOUT P.E. STAMP & SIGNATURE

SITE NAME:
CK LAKE VALLEY

ADDRESS:
HIGHWAY 1611
RUSSELL SPRINGS, KY 42642

COUNTY:
RUSSELL

LATITUDE:
36° 58' 16.42" N

LONGITUDE:
84° 58' 53.50" W

SITE NUMBER:
KY0118

SHEET TITLE:
OVERALL SITE PLAN

DRAWING NO.	REVISION:
Z-2	0

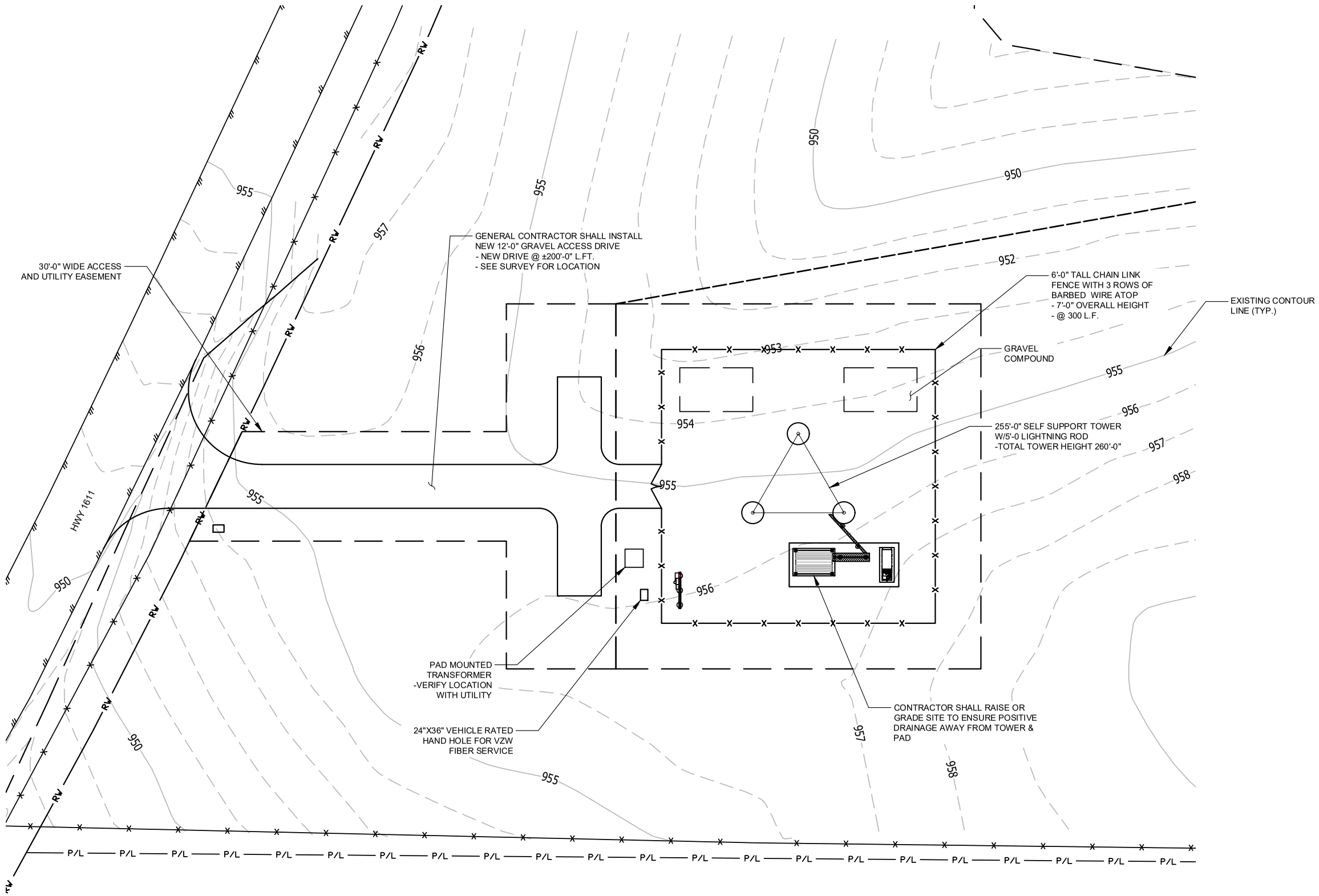

Kentucky 811
Know what's below. Call before you dig.
Call Monday thru Friday – 7 am. to 6 pm.
1-800-752-6007
PER KENTUCKY STATE LAW, IT IS AGAINST THE LAW TO EXCAVATE WITHOUT NOTIFYING THE UNDERGROUND LOCATION SERVICE TWO (2) WORKING DAYS BEFORE COMMENCING WORK.

GRADING AND E&S CONTROL PLAN

NORTH

0' 30' 60'
SCALE: 1" = 30'

PREPARED FOR:
TowerCo®
5000 VALLEYSTONE DR #200
CARY, NC 27519

PREPARED BY:
TeleCAD Wireless
1961 NORTHPOINT BLVD, SUITE 130
HIXSON, TN 37343
PH: 423-843-9500
FAX: 423-843-9509

DRAWN BY:	JAE
CHECKED BY:	DS

REVISIONS

NO.	DATE	BY	DESCRIPTION
0	09/08/25	JAE	ZONING ISSUE
B	08/11/25	JAE	PRELIMINARY REVIEW
A	07/29/25	JAE	PRELIMINARY REVIEW

ENGINEER'S STAMP:
STATE OF KENTUCKY
STEPHEN E. HUNT
25003
LICENSED PROFESSIONAL ENGINEER
NOT VALID WITHOUT P.E. STAMP & SIGNATURE

SITE NAME:
CK LAKE VALLEY

ADDRESS:
HIGHWAY 1611
RUSSELL SPRINGS, KY 42642

COUNTY:
RUSSELL

LATITUDE:
36° 58' 16.42" N

LONGITUDE:
84° 58' 53.50" W

SITE NUMBER:
KY0118

SHEET TITLE:
GRADING AND E&S CONTROL PLAN

DRAWING NO.	REVISION:
Z-3	0

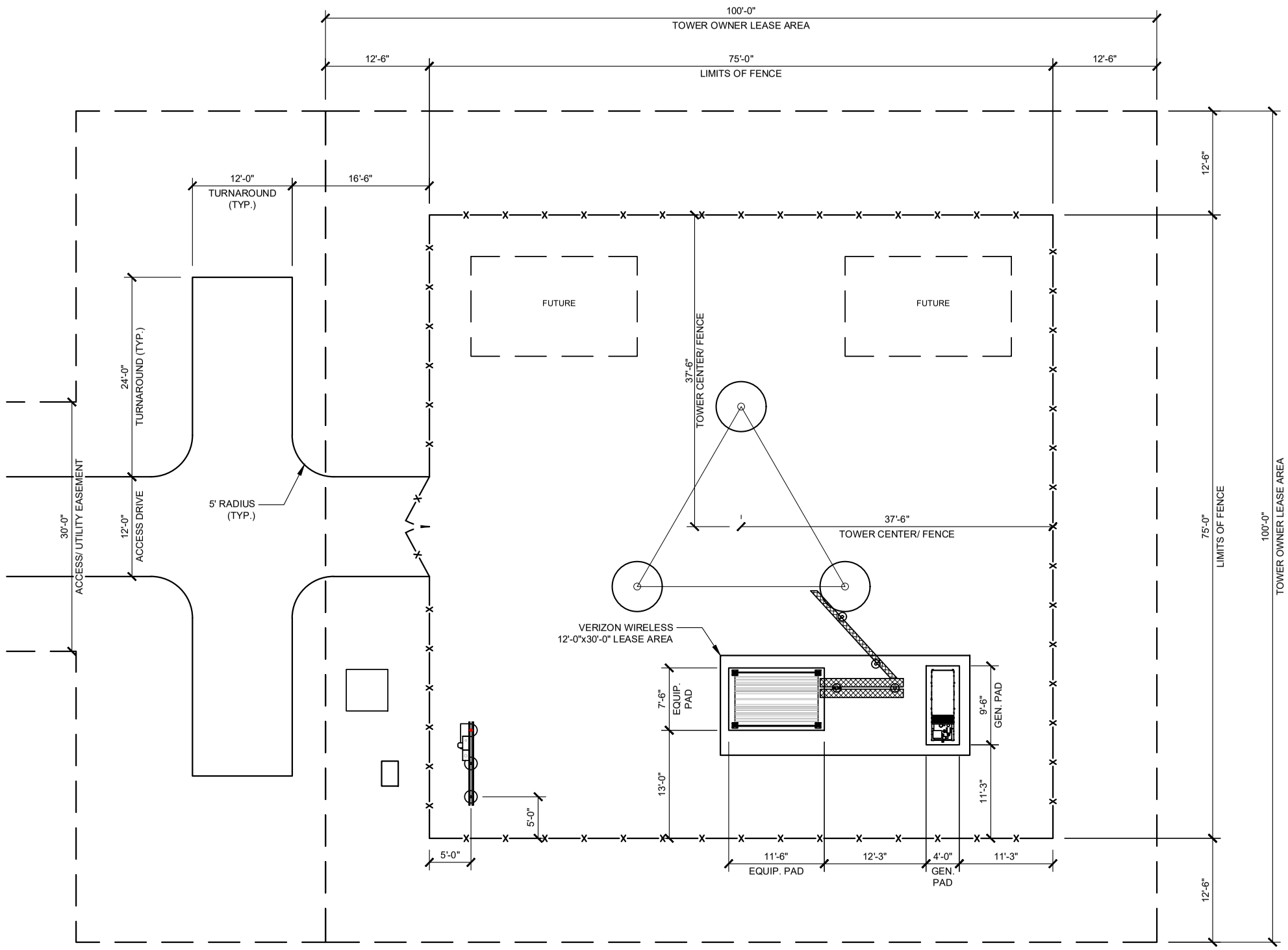

LEGEND

	IRON PIN
+XXX.XX	DRAINAGE LINE SPOT ELEVATION
	GRAVEL COMPOUND
	CENTER LINE
—X—X—X—	NEW FENCE LINE
	NEW SILT FENCE LINE
—OE—OE—	POWER POLEw/OVERHEAD ELEC./TELE.
	EDGE OF NEW DRIVE
	UNDERGROUND ELECTRICAL CONDUIT
	UNDERGROUND TELEPHONE CONDUIT
	EXISTING CONTOURS
	NEW CONTOURS
	NEW LEASE AREA AND EASEMENT
	FENCED COMPOUND
	CONCRETE
	ACCESS DRIVE

Kentucky 811
Know what's below.
Call before you dig.
Call Monday thru Friday – 7 am. to 6 pm.
1-800-752-6007
PER KENTUCKY STATE LAW, IT IS AGAINST THE LAW TO EXCAVATE WITHOUT NOTIFYING THE UNDERGROUND LOCATION SERVICE TWO (2) WORKING DAYS BEFORE COMMENCING WORK.

*NOTE:
GENERAL CONTRACTOR IS TO ENSURE THERE IS NO DISTURBANCE OF PROPERTY, SOIL, ETC. OUTSIDE OF THE STAKED LEASE AREA WITHOUT APPROVAL FROM VERIZON WIRELESS CONSTRUCTION MANAGER

DIMENSIONED SITE PLAN

NORTH

0' 15' 30'
SCALE: 1" = 15'

PREPARED FOR:
TowerCo®
5000 VALLEYSTONE DR #200
CARY, NC 27519

PREPARED BY:
TeleCAD Wireless
1961 NORTHPOINT BLVD, SUITE 130
HIXSON, TN 37343
PH: 423-843-9500
FAX: 423-843-9509

DRAWN BY:	JAE
CHECKED BY:	DS

REVISIONS

NO.	DATE	BY	DESCRIPTION
0	09/08/25	JAE	ZONING ISSUE
B	08/11/25	JAE	PRELIMINARY REVIEW
A	07/29/25	JAE	PRELIMINARY REVIEW

ENGINEER'S STAMP:
STATE OF KENTUCKY
STEPHEN E. HUNT
25003
LICENSED PROFESSIONAL ENGINEER
NOT VALID WITHOUT P.E. STAMP & SIGNATURE

SITE NAME:	CK LAKE VALLEY
ADDRESS:	HIGHWAY 1611 RUSSELL SPRINGS, KY 42642
COUNTY:	RUSSELL
LATITUDE:	36° 58' 16.42" N
LONGITUDE:	84° 58' 53.50" W
SITE NUMBER:	KY0118
SHEET TITLE:	DIMENSIONED SITE PLAN
DRAWING NO.	Z-4
REVISION:	0

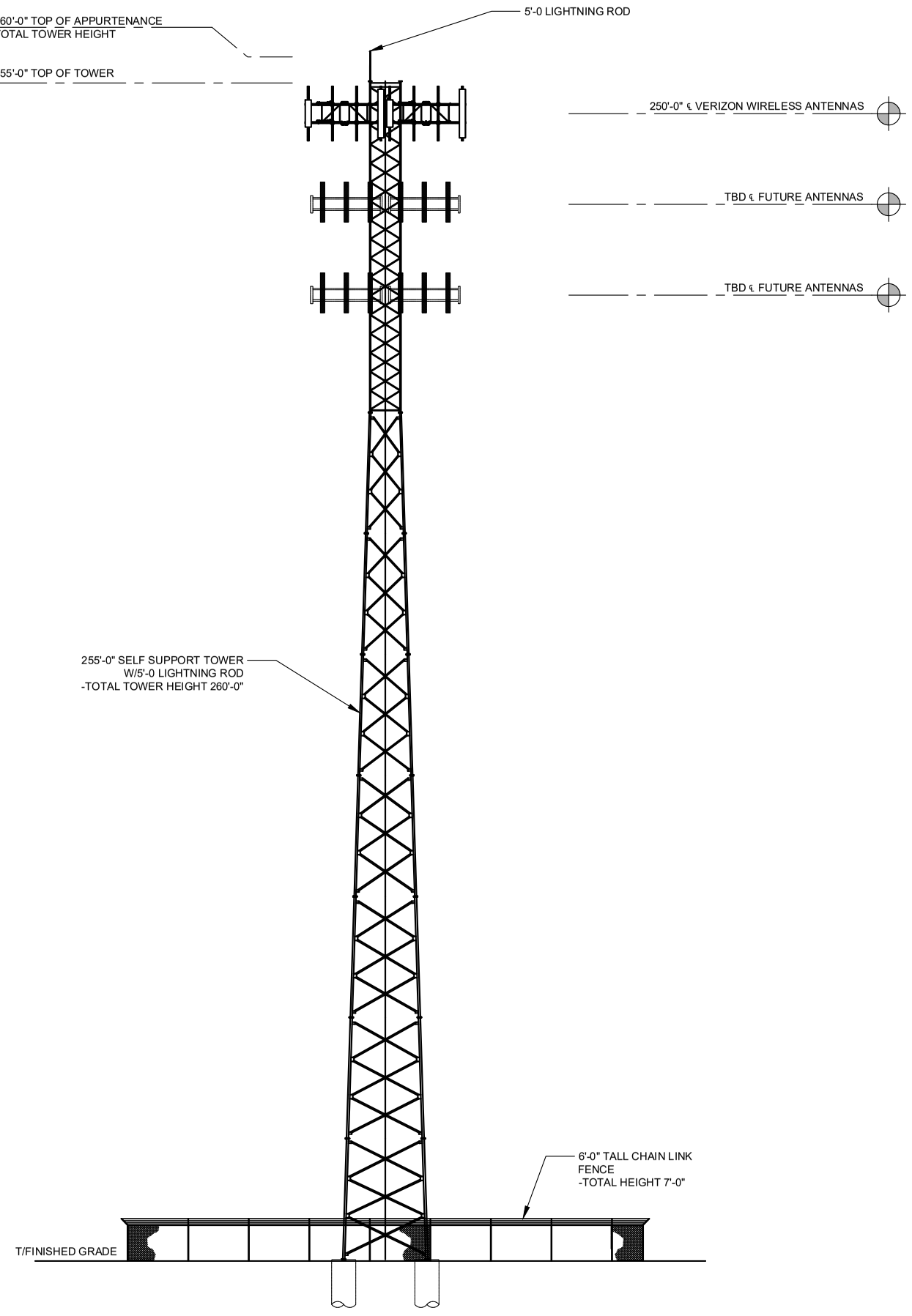

TOWER ELEVATION

SCALE: N.T.S.

PREPARED FOR:

TowerCo®

5000 VALLEYSTONE DR #200
CARY, NC 27519

PREPARED BY:

TeleCAD Wireless

1961 NORTHPOINT BLVD, SUITE 130
HIXSON, TN 37343
PH: 423-843-9500
FAX: 423-843-9509

DRAWING NOTICE:

THE INFORMATION CONTAINED IN THIS SET OF DOCUMENTS IS PROPRIETARY BY NATURE. ANY USE OR DISCLOSURE OTHER THAN THAT WHICH RELATES TO THE CLIENT IS STRICTLY PROHIBITED.

DRAWN BY:	JAE
CHECKED BY:	DS

REVISIONS

NO.	DATE	BY	DESCRIPTION
0	09/08/25	JAE	ZONING ISSUE
B	08/11/25	JAE	PRELIMINARY REVIEW
A	07/29/25	JAE	PRELIMINARY REVIEW

ENGINEER'S STAMP:

STATE OF KENTUCKY
STEPHEN E. HUNT
25003
LICENSED PROFESSIONAL ENGINEER

NOT VALID WITHOUT P.E. STAMP & SIGNATURE

SITE NAME:
CK LAKE VALLEY

ADDRESS:
HIGHWAY 1611
RUSSELL SPRINGS, KY 42642

COUNTY:
RUSSELL

LATITUDE:
36° 58' 16.42" N

LONGITUDE:
84° 58' 53.50" W

SITE NUMBER:
KY0118

SHEET TITLE:
TOWER ELEVATION

DRAWING NO.	REVISION:
Z-5	0

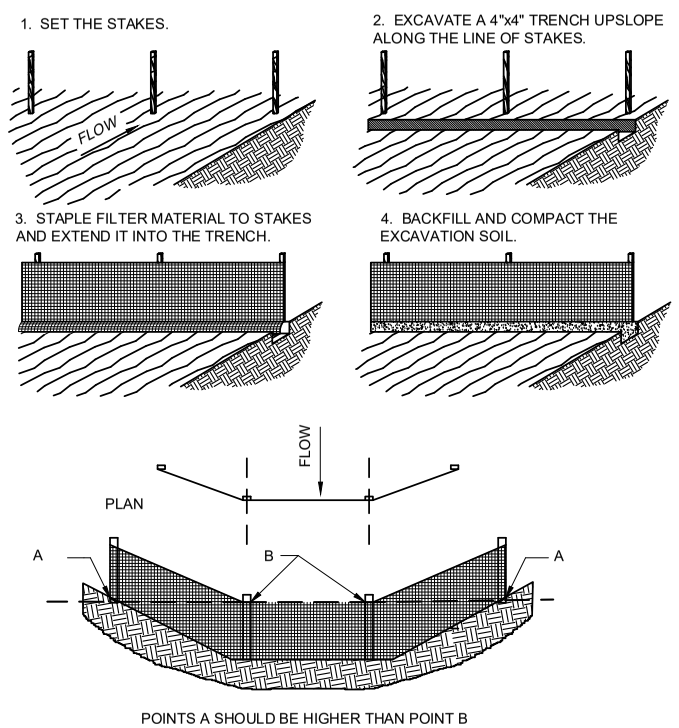

SILT FENCE DETAIL

SCALE: N.T.S.

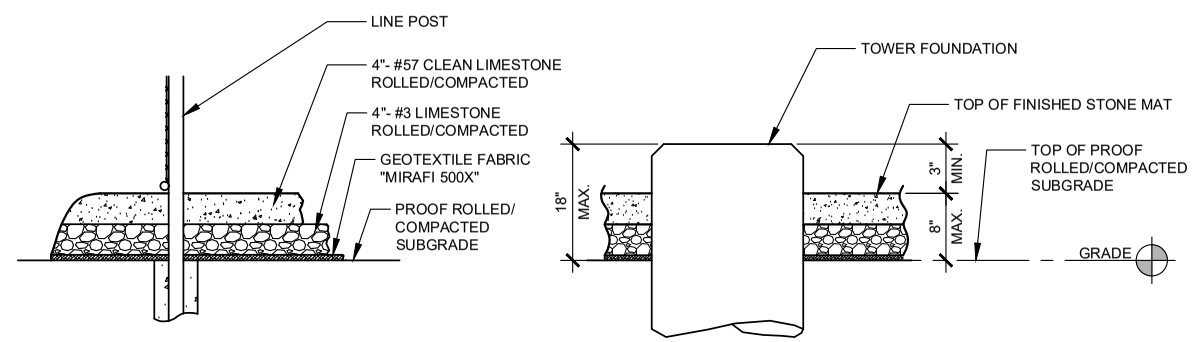

PARTIAL COMPOUND SECTION

SCALE: N.T.S.

PREPARED FOR:

TowerCo®

5000 VALLEYSTONE DR #200
CARY, NC 27519

PREPARED BY:

TeleCAD Wireless

1961 NORTHPOINT BLVD, SUITE 130
HIXSON, TN 37343
PH: 423-843-9500
FAX: 423-843-9509

DRAWING NOTICE:

THE INFORMATION CONTAINED IN THIS SET OF DOCUMENTS IS PROPRIETARY BY NATURE. ANY USE OR DISCLOSURE OTHER THAN THAT WHICH RELATES TO THE CLIENT IS STRICTLY PROHIBITED.

DRAWN BY:	JAE
CHECKED BY:	DS

REVISIONS

NO.	DATE	BY	DESCRIPTION
0	09/08/25	JAE	ZONING ISSUE
B	08/11/25	JAE	PRELIMINARY REVIEW
A	07/29/25	JAE	PRELIMINARY REVIEW

ENGINEER'S STAMP:

STATE OF KENTUCKY
STEPHEN E. HUNT
25003
LICENSED PROFESSIONAL ENGINEER

NOT VALID WITHOUT P.E. STAMP & SIGNATURE

SITE NAME:
CK LAKE VALLEY

ADDRESS:
HIGHWAY 1611
RUSSELL SPRINGS, KY 42642

COUNTY:
RUSSELL

LATITUDE:
36° 58' 16.42" N

LONGITUDE:
84° 58' 53.50" W

SITE NUMBER:
KY0118

SHEET TITLE:
SITE DETAILS

DRAWING NO.	REVISION:
Z-6	0

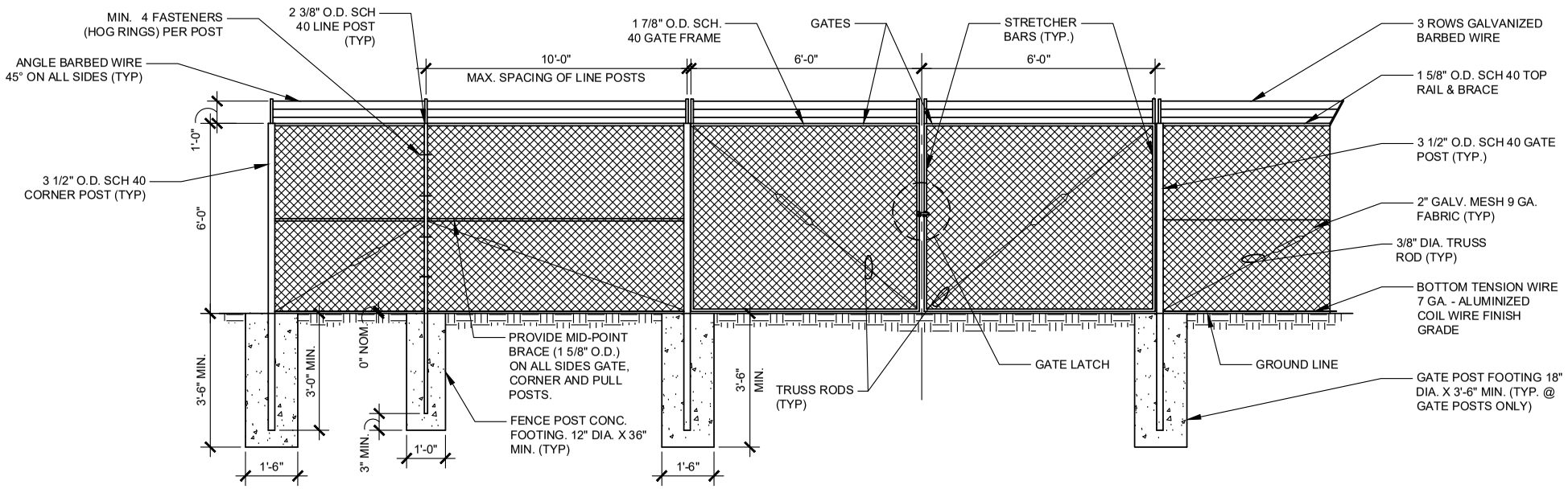

CHAIN LINK FENCE & POST DETAIL

SCALE: N.T.S.

CHAIN LINK FENCING NOTES

1. ALL FENCE AND FABRIC SHALL BE HOT DIPPED GALVANIZED WITH A MINIMUM OF 2 OZ. PER SQUARE FOOT, 9 GAUGE WIRE (MIN. BREAKING STRENGTH OF 1,290 LBS) WITH 2" MESH. ALL BARBED WIRE SHALL BE ALUMINUM OR COATED PER NOTE #4.
2. BOTTOM EDGE OF FENCE FABRIC SHALL EXTEND TO FINISHED GRADE.
3. SITE FENCE SHALL BE 6'-0" FABRIC W/ 3 STRAND BARBED WIRE FOR TOTAL HEIGHT OF 7'-0".
4. BARBED WIRE SHALL MEET ASTM A 121, CLASS 3 GALV. OR ASTM A 585, TYPE I, CLASS 2 COATING (NOT LESS THAN 0.8 OZ. PER SQ. FT.) AND SHALL BE THREE STRAND 12.5 GAGE w/4 POINT BARBS AT 5" O/C.
5. BOTTOM OF CONCRETE BASE SHALL BE SET BELOW FROSTLINE (SEE LOCAL CODE). WHERE SOIL BEARING CAPACITY IS LESS THAN 2000 PSF, INCREASE CONCRETE SURROUNDING FENCE POST FOUNDATION DIAMETERS BY 8", PROVIDE CONCRETE WITH A 28 DAY STRENGTH OF 3000 PSI (MIN.)
6. PROVIDE A DIAGONAL BRACE ROD AND TURN BUCKLE ON BOTH GATE LEAFS.
7. ALL RAILS AND BRACES SHALL BE SCHEDULE 40 STEEL PIPE, AND ALL FENCE POSTS SHALL BE SCHEDULE 40 STEEL PIPE, AND BE 2 OZ. GALVANIZED COATED.
8. CONTRACTOR SHALL ENSURE ALL POSTS ARE PLUMB.
9. ALL FENCE SHALL BE FABRICATED AND INSTALLED PER ASTM F2611-15, ASTM F567-14a AND CHAIN LINK FENCE MANUFACTURES INSTITUTE CLFMI-PM 2445.
10. CONTRACTOR SHALL FURNISH AND INSTALL ONE (1) MASTER LOCK LONG SHANK #175LH COMBINATION PADLOCK. COMBINATION TO BE SET AT 7011.

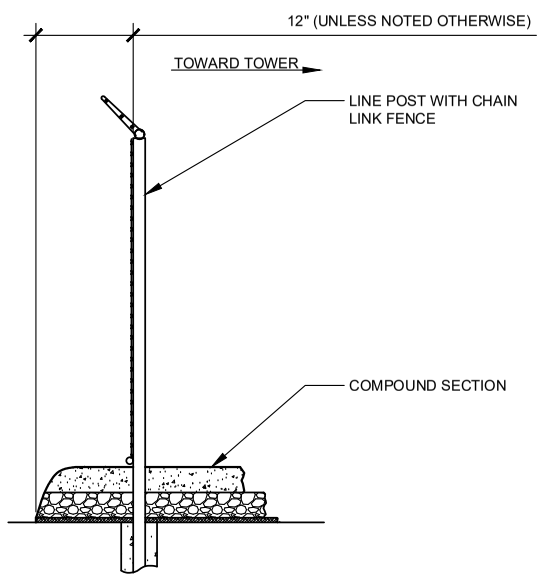

SITE AREA SURFACING

SCALE: N.T.S.

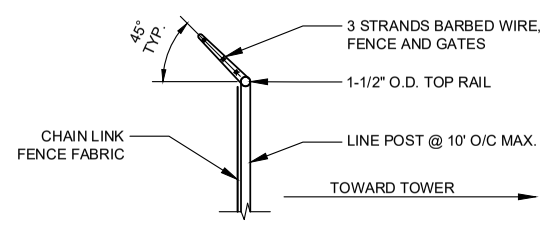

TYPICAL BARBED WIRE DETAIL

SCALE: N.T.S.

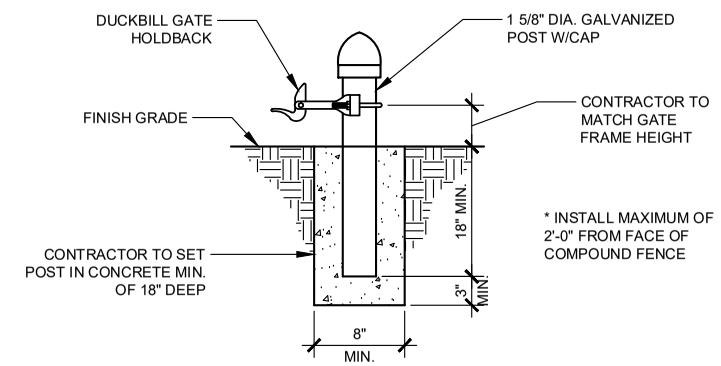

GATE KEEPER DETAIL

SCALE: N.T.S.

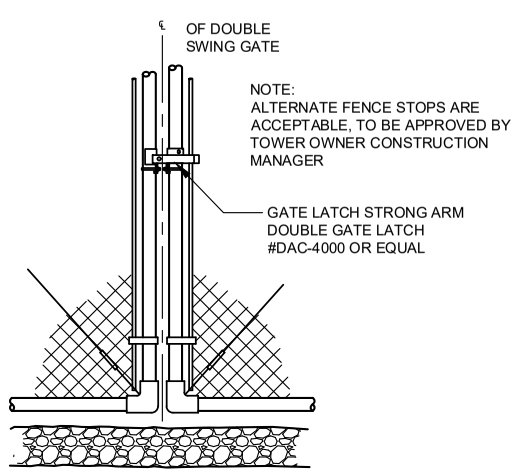

GATE LATCH DETAIL

SCALE: N.T.S.

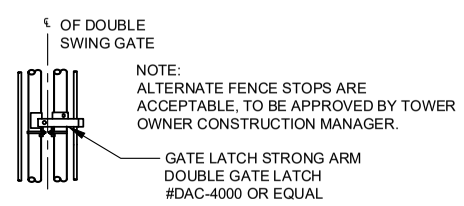

GATE LATCH DETAIL

SCALE: N.T.S.

PREPARED FOR:

TowerCo®

5000 VALLEYSTONE DR #200
CARY, NC 27519

PREPARED BY:

TeleCAD Wireless

1961 NORTHPOINT BLVD, SUITE 130
HIXSON, TN 37343
PH: 423-843-9500
FAX: 423-843-9509

DRAWING NOTICE:
THE INFORMATION CONTAINED IN THIS SET OF DOCUMENTS IS PROPRIETARY BY NATURE. ANY USE OR DISCLOSURE OTHER THAN THAT WHICH RELATES TO THE CLIENT IS STRICTLY PROHIBITED.

DRAWN BY:	JAE
CHECKED BY:	DS

REVISIONS

NO.	DATE	BY	DESCRIPTION
0	09/08/25	JAE	ZONING ISSUE
B	08/11/25	JAE	PRELIMINARY REVIEW
A	07/29/25	JAE	PRELIMINARY REVIEW

ENGINEER'S STAMP:

STATE OF KENTUCKY
STEPHEN E. HUNT
25003
LICENSED PROFESSIONAL ENGINEER

NOT VALID WITHOUT P.E. STAMP & SIGNATURE

SITE NAME:
CK LAKE VALLEY

ADDRESS:
HIGHWAY 1611
RUSSELL SPRINGS, KY 42642

COUNTY:
RUSSELL

LATITUDE:
36° 58' 16.42" N

LONGITUDE:
84° 58' 53.50" W

SITE NUMBER:
KY0118

SHEET TITLE:
FENCE DETAILS AND NOTES

DRAWING NO.	REVISION:
Z-7	0

NOTES:

VERIZON WIRELESS SITE ID SIGN, RFE SIGNS, NOC INFORMATION SIGN AND ALL OTHER SIGNAGE NOT REFERENCED IN THIS DRAWING WILL BE FURNISHED AND INSTALLED BY VERIZON WIRELESS PERSONELL PER VERIZON WIRELESS RFC SIGNAGE & DEMARCATION POLICY.

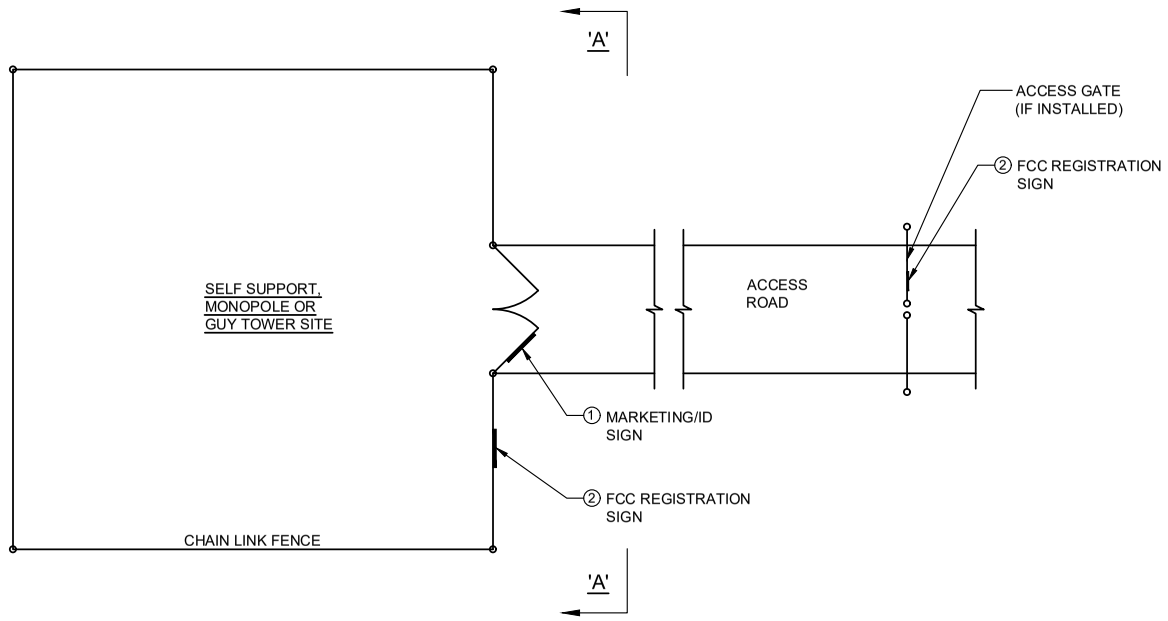

TYPICAL SITE FENCE SIGNAGE PLAN

SCALE: N. T. S.

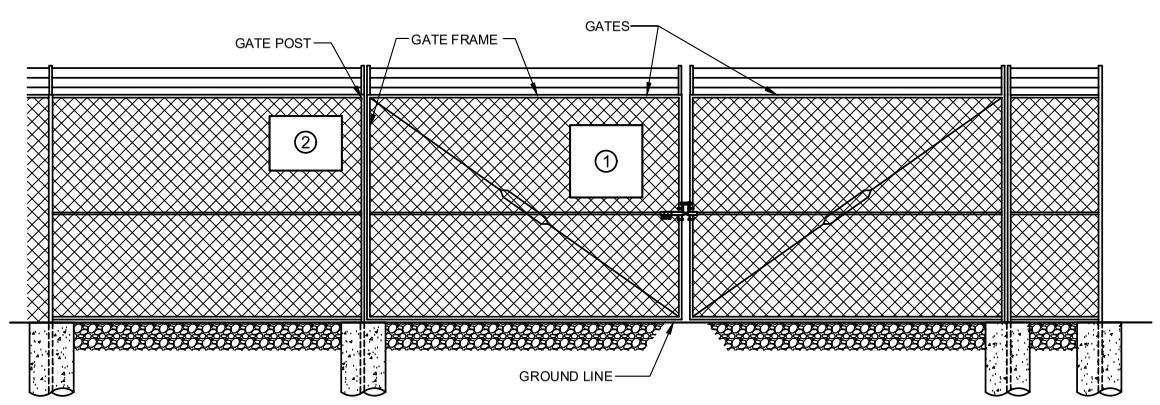

ELEVATION "A-A"

SCALE: N. T. S.

TowerCo®

TOWER ID

FCC REGISTRATION

WHITE BACKGROUND w/BLACK LETTERING

TOWER LEASING OFFICE

919-653-5700

VISIT OUR WEBSITE
WWW.TOWERCO.COM

MARKETING/ID SIGN 1

24" WIDE x 24" HIGH

FCC ANTENNA
STRUCTURE
REGISTRATION

WHITE BACKGROUND w/BLACK LETTERING

FCC REGISTRATION SIGN 2

24" WIDE x 18" HIGH

PREPARED FOR:

TowerCo®

5000 VALLEYSTONE DR #200
CARY, NC 27519

PREPARED BY:

TeleCAD Wireless

1961 NORTHPOINT BLVD, SUITE 130
HIXSON, TN 37343
PH: 423-843-9500
FAX: 423-843-9509

DRAWING NOTICE:

THE INFORMATION CONTAINED IN THIS SET OF DOCUMENTS IS PROPRIETARY BY NATURE. ANY USE OR DISCLOSURE OTHER THAN THAT WHICH RELATES TO THE CLIENT IS STRICTLY PROHIBITED.

DRAWN BY:	JAE
CHECKED BY:	DS

REVISIONS

NO.	DATE	BY	DESCRIPTION
0	09/08/25	JAE	ZONING ISSUE
B	08/11/25	JAE	PRELIMINARY REVIEW
A	07/29/25	JAE	PRELIMINARY REVIEW

ENGINEER'S STAMP:

STATE OF KENTUCKY
STEPHEN E. HUNT
25003
LICENSED PROFESSIONAL ENGINEER

NOT VALID WITHOUT P.E. STAMP & SIGNATURE

SITE NAME:
CK LAKE VALLEY

ADDRESS:
HIGHWAY 1611
RUSSELL SPRINGS, KY 42642

COUNTY:
RUSSELL

LATITUDE:
36° 58' 16.42" N

LONGITUDE:
84° 58' 53.50" W

SITE NUMBER:
KY0118

SHEET TITLE:
TOWER OWNER SIGNAGE

DRAWING NO.	REVISION:
Z-8	0

sabre

Structural Design Report

255' S3TL Series HD2 Self-Supporting Tower
Site: CK Lake Valley, KY
Site Number: KY0118

Prepared for: TOWERCO LLC
by: Sabre Industries ™

Job Number: 26-2603-JDS

December 23, 2025

STATE OF KENTUCKY
KEITH J. TINDALL
20897
LICENSED
PROFESSIONAL ENGINEER

12/23/25

Digitally Signed By Keith Tindall
DN: C=US,SERIALNUMBER=MAS20250205984405,ST=Texas,L=Alvarado,2.5.4.97=NTRUS\+DE-4349737,O=SABRE INDUSTRIES\, INC.,CN=Keith Tindall Date: 2025.12.23 09:50:27

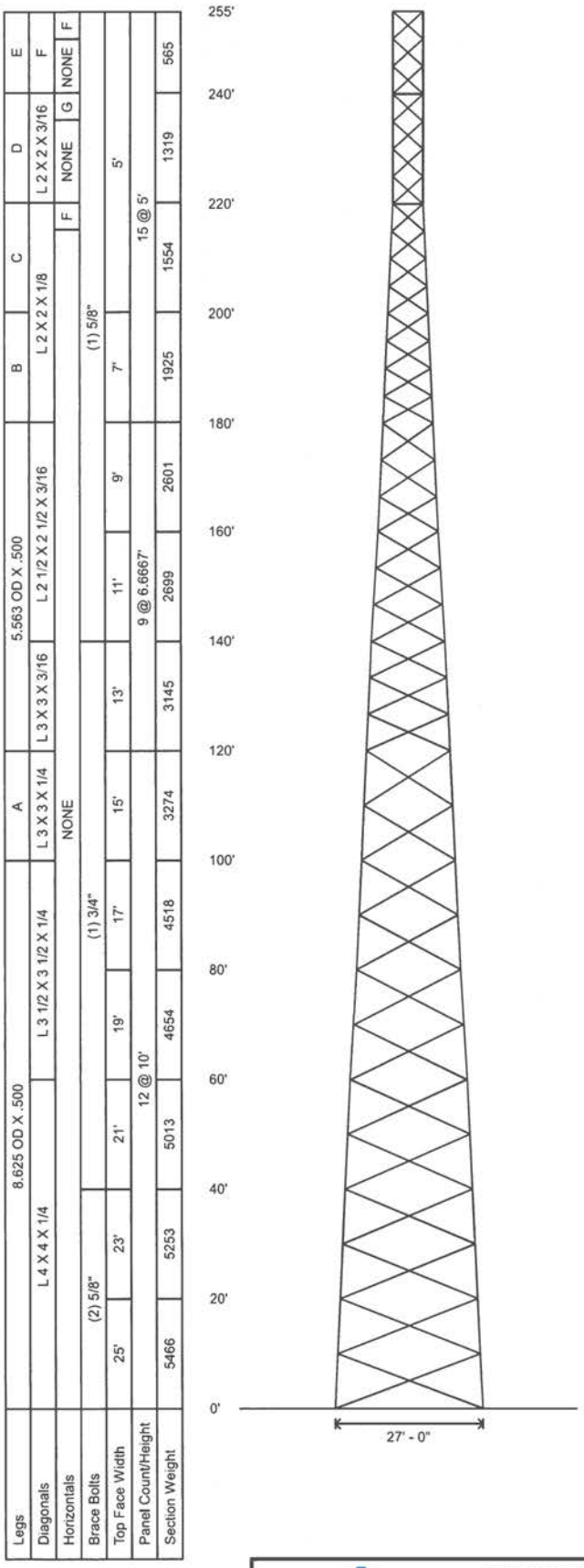

Designed Appurtenance Loading

Elev	Description	Tx-Line
250	3 EHD V-Boom - 12ft Face - 3ft Standoff	
250	(1) 42,000 Sq. Inches (12,000 lbs) (below top)	(18) 1 5/8"
238	3V-Boom - 12ft Face - 3ft Standoff	
238	(1) 20,000 sq. in. (4000 lbs) (below top)	(12) 1 5/8"
228	3V-Boom - 12ft Face - 3ft Standoff	
228	(1) 20,000 sq. in. (4000 lbs) (below top)	(12) 1 5/8"

Design Criteria - ANSI/TIA-222-G

Ultimate Wind Speed (No Ice)	115 mph
Wind Speed (Ice)	30 mph
Design Ice Thickness	0.75 in
Structure Class	II
Risk Category	II
Exposure Category	C
Topographic Category	1
Seismic Importance Factor, Ie	1.00
0.2-sec Spectral Response, Ss	0.193 g
1-sec Spectral Response, S1	0.102 g
Site Class	D (DEFAULT)
Seismic Design Category	C
Basic Seismic Force-Resisting System	Telecommunication Tower (Truss: Steel)

Base Reactions - Wind/Ice

Total Foundation		Individual Footing	
Shear (kips)	70.47	Shear (kips)	43.64
Axial (kips)	213.39	Compression (kips)	488
Moment (ft-kips)	10718	Uplift (kips)	418

Base Reactions - Seismic

Total Foundation		Individual Footing	
Shear (kips)	3.6	Shear (kips)	4.76
Axial (kips)	97.6	Compression (kips)	64
Moment (ft-kips)	740	Uplift (kips)	9

Notes

1) All legs are A500 (50 ksi Min. Yield).
2) All braces are A572 Grade 50.
3) All brace bolts are A325-X.
4) The tower model is S3TL Series HD2.
5) Transmission lines are to be attached to standard 12 hole waveguide ladders with stackable hangers.
6) Azimuths are relative (not based on true north).
7) Foundation loads shown are maximums.
8) (6) 1 1/2" dia. x 78"-long F1554 grade 105 anchor bolts per leg on a 13.25" bolt circle w/ 9.5" max. projection above concrete.
9) All unequal angles are oriented with the short leg vertical.
10) Weights shown are estimates. Final weights may vary.
11) This tower design and, if applicable, the foundation design(s) shown on the following page(s) also meet or exceed the requirements of the 2015 International Building Code.
12) Tower Rating: 99.37%
13) No grout is required under the base plates.

sabre

Sabre Industries
7101 Southbridge Drive
P.O. Box 658
Sioux City, IA 51102-0658
Phone (712) 258-6690
Fax (712) 279-0814

Job:	26-2603-JDS
Customer:	TOWERCO LLC
Site Name:	CK Lake Valley, KY KY0118
Description:	255' S3TL
Date:	12/23/2025 By: KJT

Material List

Display	Value
A	8.625 OD X .322
B	5.563 OD X .375
C	4.500 OD X .337
D	3.500 OD X .300

Display	Value
E	2.375 OD X .154
F	L 2 X 2 X 1/8
G	L 2 X 2 X 3/16

Sabre Industries
7101 Southbridge Drive
P.O. Box 658
Sioux City, IA 51102-0658
Phone (712) 258-6690
Fax (712) 279-0814

Job:	**26-2603-JDS**
Customer:	TOWERCO LLC
Site Name:	CK Lake Valley, KY KY0118
Description:	255' S3TL
Date:	12/23/2025 By: KJT

Maximum

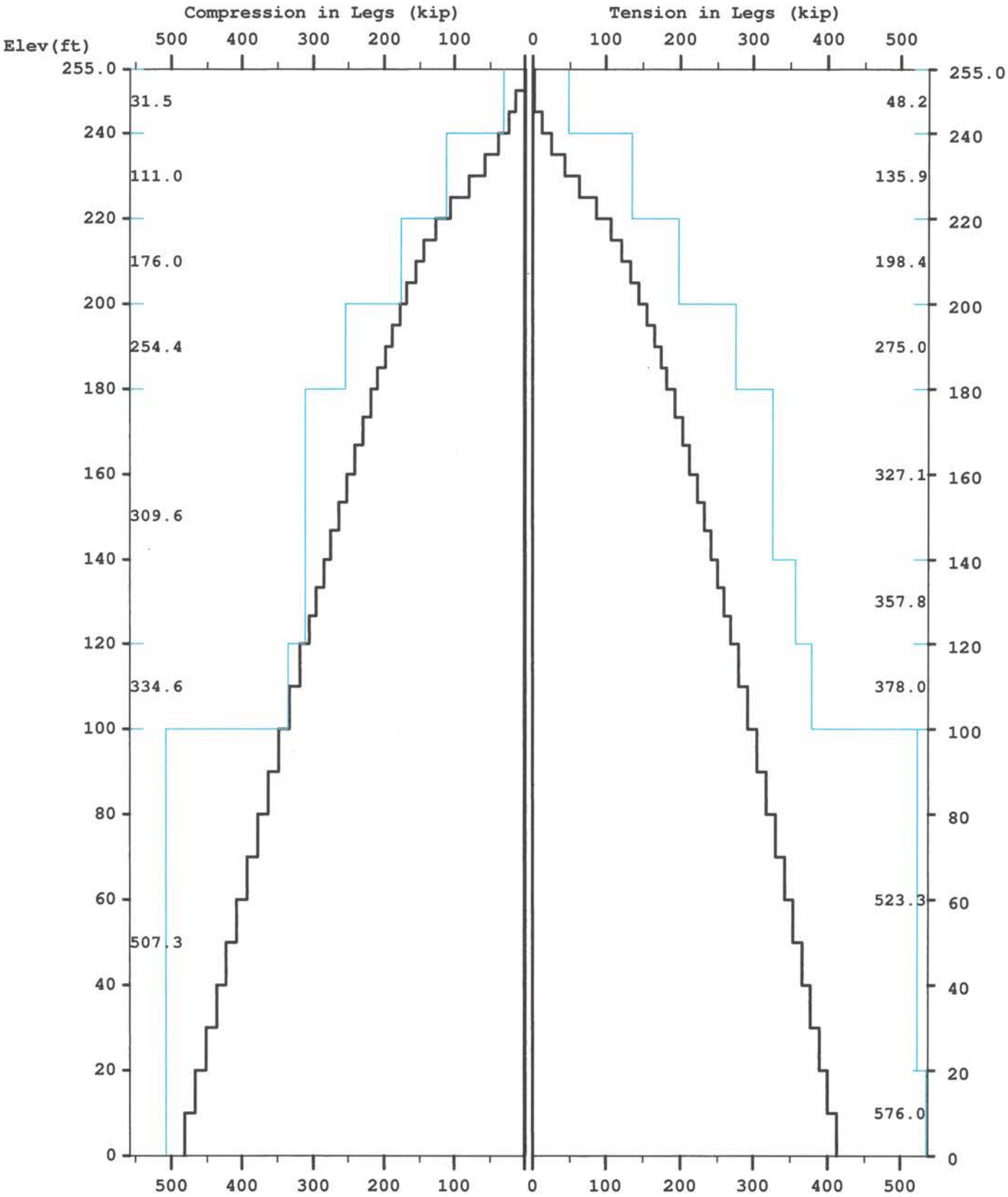
Compression in Legs (kip)
Tension in Legs (kip)
Elev(ft)
500 400 300 200 100 0 100 200 300 400 500
255.0
240
220
200
180
160
140
120
100
80
60
40
20
0
31.5
111.0
176.0
254.4
309.6
334.6
507.3
48.2
135.9
198.4
275.0
327.1
357.8
378.0
523.3
576.0

Maximum

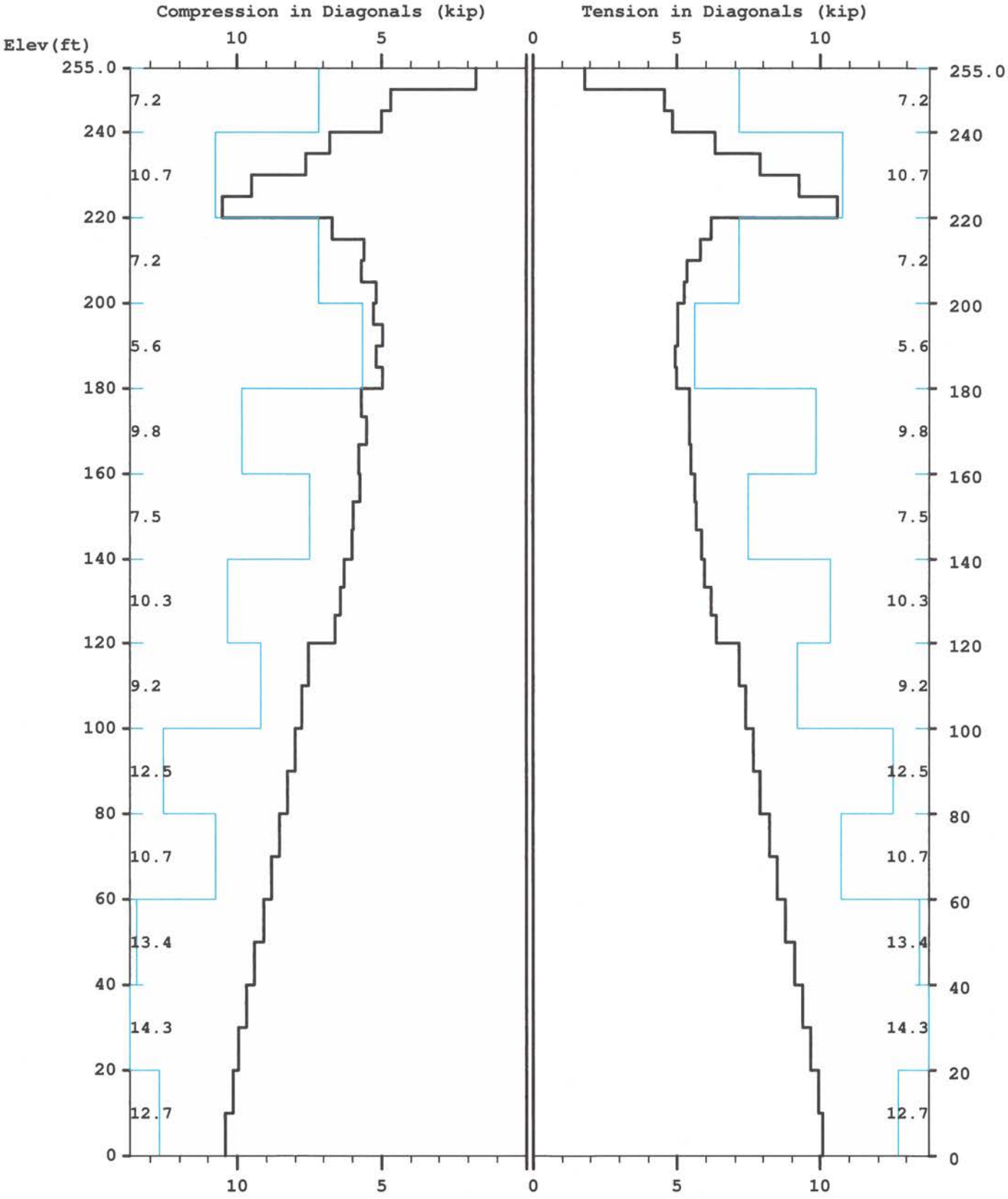
Compression in Diagonals (kip)
Tension in Diagonals (kip)
Elev(ft)
10
5
0
5
10
255.0
240
220
200
180
160
140
120
100
80
60
40
20
0
7.2
10.7
7.2
5.6
9.8
7.5
10.3
9.2
12.5
10.7
13.4
14.3
12.7

Maximum

TOTAL FOUNDATION LOADS (kip, ft-kip)

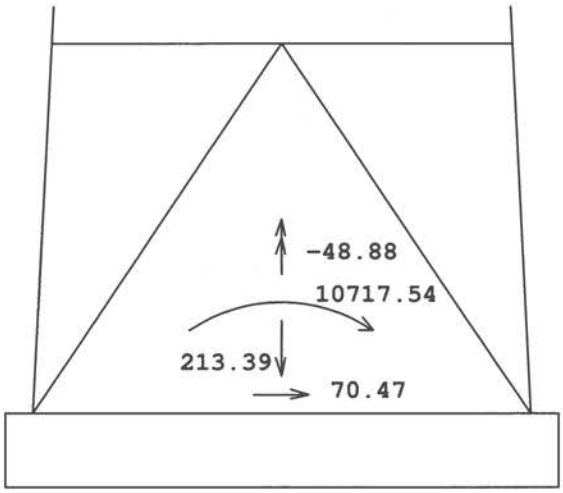

INDIVIDUAL FOOTING LOADS (kip)

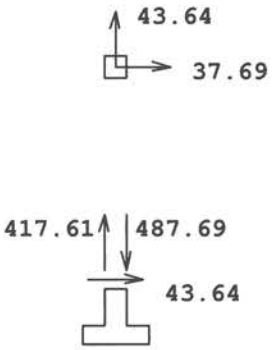

MAST GEOMETRY (ft)
==========

PANEL TYPE	NO.OF LEGS	ELEV.AT BOTTOM	ELEV.AT TOP	F.W..AT BOTTOM	F.W..AT TOP	TYPICAL PANEL HEIGHT
X	3	250.00	255.00	5.00	5.00	5.00
X	3	240.00	250.00	5.00	5.00	5.00
X	3	235.00	240.00	5.00	5.00	5.00
X	3	220.00	235.00	5.00	5.00	5.00
X	3	215.00	220.00	5.50	5.00	5.00
X	3	200.00	215.00	7.00	5.50	5.00
X	3	180.00	200.00	9.00	7.00	5.00
X	3	160.00	180.00	11.00	9.00	6.67
X	3	140.00	160.00	13.00	11.00	6.67
X	3	120.00	140.00	15.00	13.00	6.67
X	3	100.00	120.00	17.00	15.00	10.00
X	3	80.00	100.00	19.00	17.00	10.00
X	3	60.00	80.00	21.00	19.00	10.00
X	3	40.00	60.00	23.00	21.00	10.00
X	3	20.00	40.00	25.00	23.00	10.00
X	3	0.00	20.00	27.00	25.00	10.00

MEMBER PROPERTIES
==========

MEMBER TYPE	BOTTOM ELEV ft	TOP ELEV ft	X-SECTN AREA in.sq	RADIUS OF GYRAT in	ELASTIC MODULUS ksi	THERMAL EXPANSN /deg
LE	240.00	255.00	1.075	0.787	29000.	0.0000117
LE	220.00	240.00	3.016	0.787	29000.	0.0000117
LE	200.00	220.00	4.407	0.787	29000.	0.0000117
LE	180.00	200.00	6.111	0.787	29000.	0.0000117
LE	120.00	180.00	7.952	0.787	29000.	0.0000117
LE	100.00	120.00	8.399	0.787	29000.	0.0000117
LE	0.00	100.00	12.763	0.787	29000.	0.0000117
DI	240.00	255.00	0.484	0.626	29000.	0.0000117
DI	220.00	240.00	0.715	0.626	29000.	0.0000117
DI	180.00	220.00	0.484	0.626	29000.	0.0000117
DI	140.00	180.00	0.902	0.626	29000.	0.0000117
DI	120.00	140.00	1.090	0.626	29000.	0.0000117
DI	100.00	120.00	1.438	0.626	29000.	0.0000117
DI	60.00	100.00	1.688	0.626	29000.	0.0000117
DI	0.00	60.00	1.938	0.626	29000.	0.0000117
HO	250.00	255.00	0.484	0.626	29000.	0.0000117
HO	235.00	240.00	0.715	0.626	29000.	0.0000117
HO	215.00	220.00	0.484	0.626	29000.	0.0000117

FACTORED MEMBER RESISTANCES
==========

BOTTOM ELEV ft	TOP ELEV ft	LEGS COMP kip	LEGS TENS kip	DIAGONALS COMP kip	DIAGONALS TENS kip	HORIZONTALS COMP kip	HORIZONTALS TENS kip	INT BRACING COMP kip	INT BRACING TENS kip
250.0	255.0	31.48	48.15	7.16	7.16	5.82	5.82	0.00	0.00

240.0	250.0	31.48	48.15	7.16	7.16	0.00	0.00	0.00	0.00
235.0	240.0	110.98	135.90	10.74	10.74	8.46	8.46	0.00	0.00
220.0	235.0	110.98	135.90	10.74	10.74	0.00	0.00	0.00	0.00
215.0	220.0	175.98	198.45	7.16	7.16	5.82	5.82	0.00	0.00
200.0	215.0	175.98	198.45	7.16	7.16	0.00	0.00	0.00	0.00
180.0	200.0	254.38	274.95	5.63	5.63	0.00	0.00	0.00	0.00
160.0	180.0	309.64	327.10	9.84	9.84	0.00	0.00	0.00	0.00
140.0	160.0	309.64	327.10	7.46	7.46	0.00	0.00	0.00	0.00
120.0	140.0	309.64	357.75	10.34	10.34	0.00	0.00	0.00	0.00
100.0	120.0	334.65	378.00	9.19	9.19	0.00	0.00	0.00	0.00
80.0	100.0	507.33	523.32	12.53	12.53	0.00	0.00	0.00	0.00
60.0	80.0	507.33	523.32	10.73	10.73	0.00	0.00	0.00	0.00
40.0	60.0	507.33	523.32	13.43	13.43	0.00	0.00	0.00	0.00
20.0	40.0	507.33	523.32	14.31	14.31	0.00	0.00	0.00	0.00
0.0	20.0	507.33	576.00	12.68	12.68	0.00	0.00	0.00	0.00

==========
* Only 5 condition(s) shown in full

==========

LOADING CONDITION A ==========

115 mph Ultimate wind with no ice. Wind Azimuth: 0◆ (1.2 D + 1.0 Wo)

MAST LOADING
==========

LOAD TYPE	ELEV ft	APPLY..LOAD..AT RADIUS ft	AZI	LOAD AZI	.....FORCES..... HORIZ kip	DOWN kip	.....MOMENTS..... VERTICAL ft-kip	TORSNAL ft-kip
C	250.0	0.00	0.0	0.0	9.04	16.24	0.00	0.00
C	238.0	0.00	0.0	0.0	4.52	6.40	0.00	0.00
C	228.0	0.00	0.0	0.0	4.48	6.40	0.00	0.00
D	255.0	0.00	180.0	0.0	0.07	0.04	0.00	0.00
D	250.0	0.00	180.0	0.0	0.07	0.04	0.00	0.00
D	250.0	0.00	318.0	0.0	0.13	0.06	0.06	-0.10
D	240.0	0.00	318.0	0.0	0.13	0.06	0.06	-0.10
D	240.0	0.00	330.8	0.0	0.16	0.11	0.06	-0.07
D	235.0	0.00	330.8	0.0	0.16	0.11	0.06	-0.07
D	235.0	0.00	338.4	0.0	0.16	0.11	0.06	-0.05
D	230.0	0.00	338.4	0.0	0.16	0.11	0.06	-0.05
D	230.0	0.00	355.4	0.0	0.17	0.12	0.06	-0.04
D	225.0	0.00	355.4	0.0	0.17	0.12	0.06	-0.04
D	225.0	0.00	6.2	0.0	0.17	0.12	0.06	-0.03
D	220.0	0.00	6.2	0.0	0.17	0.12	0.06	-0.03
D	220.0	0.00	13.8	0.0	0.18	0.14	0.08	-0.02
D	200.0	0.00	7.2	0.0	0.18	0.13	0.07	-0.03
D	200.0	0.00	20.3	0.0	0.18	0.16	0.09	0.00
D	180.0	0.00	15.8	0.0	0.19	0.16	0.08	-0.01
D	180.0	0.00	24.7	0.0	0.19	0.20	0.11	0.01
D	160.0	0.00	21.8	0.0	0.20	0.20	0.10	0.00
D	160.0	0.00	28.0	0.0	0.19	0.20	0.13	0.03
D	140.0	0.00	25.9	0.0	0.20	0.21	0.11	0.02
D	140.0	0.00	30.6	0.0	0.21	0.22	0.14	0.04
D	120.0	0.00	28.9	0.0	0.22	0.22	0.13	0.03
D	120.0	0.00	32.4	0.0	0.20	0.23	0.16	0.05
D	100.0	0.00	31.4	0.0	0.20	0.23	0.15	0.05
D	100.0	0.00	34.0	0.0	0.21	0.30	0.18	0.07
D	80.0	0.00	33.2	0.0	0.21	0.31	0.17	0.06
D	80.0	0.00	35.3	0.0	0.21	0.31	0.19	0.07
D	60.0	0.00	34.7	0.0	0.21	0.31	0.19	0.07
D	60.0	0.00	36.4	0.0	0.21	0.33	0.21	0.08
D	40.0	0.00	35.9	0.0	0.21	0.34	0.20	0.08

D	40.0	0.00	37.4	0.0	0.20	0.34	0.23	0.08
D	20.0	0.00	36.9	0.0	0.20	0.34	0.22	0.08
D	20.0	0.00	38.2	0.0	0.18	0.35	0.25	0.08
D	0.0	0.00	37.8	0.0	0.18	0.35	0.24	0.08

==========
LOADING CONDITION M ==========

115 mph Ultimate wind with no ice. Wind Azimuth: 0◆ (0.9 D + 1.0 Wo)

MAST LOADING
==========

LOAD TYPE	ELEV ft	APPLY..LOAD..AT RADIUS ft	AZI	LOAD AZI	.....FORCES..... HORIZ kip	DOWN kip	.....MOMENTS..... VERTICAL ft-kip	TORSNAL ft-kip
C	250.0	0.00	0.0	0.0	9.04	12.18	0.00	0.00
C	238.0	0.00	0.0	0.0	4.52	4.80	0.00	0.00
C	228.0	0.00	0.0	0.0	4.48	4.80	0.00	0.00
D	255.0	0.00	180.0	0.0	0.07	0.03	0.00	0.00
D	250.0	0.00	180.0	0.0	0.07	0.03	0.00	0.00
D	250.0	0.00	318.0	0.0	0.13	0.04	0.04	-0.10
D	240.0	0.00	318.0	0.0	0.13	0.04	0.04	-0.10
D	240.0	0.00	330.8	0.0	0.16	0.08	0.04	-0.07
D	235.0	0.00	330.8	0.0	0.16	0.08	0.04	-0.07
D	235.0	0.00	338.4	0.0	0.16	0.08	0.05	-0.05
D	230.0	0.00	338.4	0.0	0.16	0.08	0.05	-0.05
D	230.0	0.00	355.4	0.0	0.17	0.09	0.05	-0.04
D	220.0	0.00	6.2	0.0	0.17	0.09	0.05	-0.03
D	220.0	0.00	13.8	0.0	0.18	0.10	0.06	-0.02
D	200.0	0.00	7.2	0.0	0.18	0.10	0.05	-0.03
D	200.0	0.00	20.3	0.0	0.18	0.12	0.07	0.00
D	180.0	0.00	15.8	0.0	0.19	0.12	0.06	-0.01
D	180.0	0.00	24.7	0.0	0.19	0.15	0.08	0.01
D	160.0	0.00	21.8	0.0	0.20	0.15	0.07	0.00
D	160.0	0.00	28.0	0.0	0.19	0.15	0.09	0.03
D	140.0	0.00	25.9	0.0	0.20	0.16	0.09	0.02
D	140.0	0.00	30.6	0.0	0.21	0.16	0.11	0.04
D	120.0	0.00	28.9	0.0	0.22	0.17	0.10	0.03
D	120.0	0.00	32.4	0.0	0.20	0.17	0.12	0.05
D	100.0	0.00	31.4	0.0	0.20	0.17	0.11	0.05
D	100.0	0.00	34.0	0.0	0.21	0.23	0.13	0.07
D	80.0	0.00	33.2	0.0	0.21	0.23	0.13	0.06
D	80.0	0.00	35.3	0.0	0.21	0.23	0.15	0.07
D	60.0	0.00	34.7	0.0	0.21	0.23	0.14	0.07
D	60.0	0.00	36.4	0.0	0.21	0.25	0.16	0.08
D	40.0	0.00	35.9	0.0	0.21	0.25	0.15	0.08
D	40.0	0.00	37.4	0.0	0.20	0.25	0.17	0.08
D	20.0	0.00	36.9	0.0	0.20	0.26	0.17	0.08
D	20.0	0.00	38.2	0.0	0.18	0.26	0.19	0.08
D	0.0	0.00	37.8	0.0	0.18	0.26	0.18	0.08

==========
LOADING CONDITION Y ==========

30 mph wind with 0.75 ice. Wind Azimuth: 0◆ (1.2 D + 1.0 Di + 1.0 Wi)

MAST LOADING
==========

LOAD TYPE	ELEV ft	APPLY..LOAD..AT RADIUS ft	AZI	LOAD AZI	.....FORCES..... HORIZ kip	DOWN kip	.....MOMENTS..... VERTICAL ft-kip	TORSNAL ft-kip

C	250.0	0.00	0.0	0.0	1.11	40.53	0.00	0.00
C	238.0	0.00	0.0	0.0	0.59	14.69	0.00	0.00
C	228.0	0.00	0.0	0.0	0.59	14.65	0.00	0.00
D	255.0	0.00	180.0	0.0	0.01	0.18	0.00	0.00
D	250.0	0.00	180.0	0.0	0.01	0.18	0.00	0.00
D	250.0	0.00	318.0	0.0	0.01	0.25	0.22	-0.01
D	240.0	0.00	318.0	0.0	0.01	0.25	0.22	-0.01
D	240.0	0.00	334.7	0.0	0.02	0.37	0.21	0.00
D	235.0	0.00	334.7	0.0	0.02	0.37	0.21	0.00
D	235.0	0.00	345.9	0.0	0.02	0.36	0.21	0.00
D	230.0	0.00	345.9	0.0	0.02	0.36	0.21	0.00
D	230.0	0.00	2.0	0.0	0.02	0.39	0.22	0.00
D	225.0	0.00	2.0	0.0	0.02	0.39	0.22	0.00
D	225.0	0.00	11.7	0.0	0.02	0.41	0.23	0.00
D	220.0	0.00	11.7	0.0	0.02	0.41	0.23	0.00
D	220.0	0.00	19.5	0.0	0.02	0.45	0.28	0.00
D	215.0	0.00	19.5	0.0	0.02	0.45	0.28	0.00
D	215.0	0.00	17.3	0.0	0.02	0.43	0.26	0.00
D	210.0	0.00	17.3	0.0	0.02	0.43	0.26	0.00
D	210.0	0.00	15.0	0.0	0.02	0.43	0.25	0.00
D	205.0	0.00	15.0	0.0	0.02	0.43	0.25	0.00
D	205.0	0.00	12.8	0.0	0.02	0.44	0.24	0.00
D	200.0	0.00	12.8	0.0	0.02	0.44	0.24	0.00
D	200.0	0.00	25.8	0.0	0.02	0.47	0.33	0.00
D	195.0	0.00	25.8	0.0	0.02	0.47	0.33	0.00
D	195.0	0.00	24.3	0.0	0.02	0.47	0.32	0.00
D	190.0	0.00	24.3	0.0	0.02	0.47	0.32	0.00
D	190.0	0.00	22.8	0.0	0.02	0.48	0.30	0.00
D	185.0	0.00	22.8	0.0	0.02	0.48	0.30	0.00
D	185.0	0.00	21.3	0.0	0.02	0.49	0.29	0.00
D	180.0	0.00	21.3	0.0	0.02	0.49	0.29	0.00
D	180.0	0.00	30.1	0.0	0.02	0.52	0.38	0.00
D	173.3	0.00	30.1	0.0	0.02	0.52	0.38	0.00
D	173.3	0.00	28.7	0.0	0.02	0.52	0.37	0.00
D	166.7	0.00	28.7	0.0	0.02	0.52	0.37	0.00
D	166.7	0.00	27.3	0.0	0.02	0.53	0.35	0.00
D	160.0	0.00	27.3	0.0	0.02	0.53	0.35	0.00
D	160.0	0.00	33.4	0.0	0.02	0.54	0.44	0.00
D	153.3	0.00	33.4	0.0	0.02	0.54	0.44	0.00
D	153.3	0.00	32.3	0.0	0.02	0.54	0.42	0.00
D	146.7	0.00	32.3	0.0	0.02	0.54	0.42	0.00
D	146.7	0.00	31.3	0.0	0.02	0.55	0.40	0.00
D	140.0	0.00	31.3	0.0	0.02	0.55	0.40	0.00
D	140.0	0.00	35.8	0.0	0.02	0.58	0.50	0.00
D	133.3	0.00	35.8	0.0	0.02	0.58	0.50	0.00
D	133.3	0.00	35.0	0.0	0.02	0.59	0.48	0.00
D	126.7	0.00	35.0	0.0	0.02	0.59	0.48	0.00
D	126.7	0.00	34.3	0.0	0.02	0.60	0.46	0.00
D	120.0	0.00	34.3	0.0	0.02	0.60	0.46	0.00
D	120.0	0.00	37.6	0.0	0.02	0.58	0.55	0.00
D	110.0	0.00	37.6	0.0	0.02	0.58	0.55	0.00
D	110.0	0.00	36.7	0.0	0.02	0.59	0.52	0.00
D	100.0	0.00	36.7	0.0	0.02	0.59	0.52	0.00
D	100.0	0.00	39.1	0.0	0.02	0.67	0.60	0.01
D	90.0	0.00	39.1	0.0	0.02	0.67	0.60	0.01
D	90.0	0.00	38.4	0.0	0.02	0.68	0.57	0.01
D	80.0	0.00	38.4	0.0	0.02	0.68	0.57	0.01
D	80.0	0.00	40.3	0.0	0.02	0.68	0.65	0.01
D	70.0	0.00	40.3	0.0	0.02	0.68	0.65	0.01
D	70.0	0.00	39.7	0.0	0.02	0.69	0.63	0.01
D	60.0	0.00	39.7	0.0	0.02	0.69	0.63	0.01
D	60.0	0.00	41.2	0.0	0.02	0.72	0.70	0.01
D	40.0	0.00	40.8	0.0	0.02	0.73	0.67	0.01
D	40.0	0.00	41.8	0.0	0.02	0.73	0.73	0.01
D	20.0	0.00	41.6	0.0	0.02	0.73	0.71	0.01
D	20.0	0.00	40.4	0.0	0.02	0.62	0.38	0.01
D	10.0	0.00	40.4	0.0	0.02	0.62	0.38	0.01

D	10.0	0.00	41.8	0.0	0.02	0.67	0.62	0.01
D	0.0	0.00	41.8	0.0	0.02	0.67	0.62	0.01

==========
LOADING CONDITION k ==========

Seismic - Azimuth: 0◆ (1.2 D + 1.0 Ev + 1.0 Eh)

MAST LOADING
==========

LOAD TYPE	ELEV ft	APPLY..LOAD..AT RADIUS ft	AZI	LOAD AZI	.....FORCES..... HORIZ kip	DOWN kip	.....MOMENTS..... VERTICAL ft-kip	TORSNAL ft-kip
C	250.0	0.00	0.0	0.0	1.20	16.80	0.00	0.00
C	247.5	0.00	0.0	0.0	0.05	0.70	0.00	0.00
C	245.0	0.00	0.0	0.0	0.02	0.28	0.00	0.00
C	239.0	0.00	0.0	0.0	0.00	0.06	0.00	0.00
C	238.0	0.00	0.0	0.0	0.44	6.62	0.00	0.00
C	233.0	0.00	0.0	0.0	0.02	0.36	0.00	0.00
C	233.0	0.00	0.0	0.0	0.01	0.13	0.00	0.00
C	230.0	0.00	0.0	0.0	0.10	1.64	0.00	0.00
C	228.0	0.00	0.0	0.0	0.42	6.62	0.00	0.00
C	224.0	0.00	0.0	0.0	0.01	0.23	0.00	0.00
C	224.0	0.00	0.0	0.0	0.02	0.29	0.00	0.00
C	210.0	0.00	0.0	0.0	0.04	0.72	0.00	0.00
C	210.0	0.00	0.0	0.0	0.03	0.56	0.00	0.00
C	210.0	0.00	0.0	0.0	0.11	1.93	0.00	0.00
C	190.0	0.00	0.0	0.0	0.03	0.56	0.00	0.00
C	190.0	0.00	0.0	0.0	0.04	0.72	0.00	0.00
C	190.0	0.00	0.0	0.0	0.12	2.39	0.00	0.00
C	170.0	0.00	0.0	0.0	0.14	3.23	0.00	0.00
C	170.0	0.00	0.0	0.0	0.03	0.72	0.00	0.00
C	170.0	0.00	0.0	0.0	0.02	0.56	0.00	0.00
C	150.0	0.00	0.0	0.0	0.02	0.56	0.00	0.00
C	150.0	0.00	0.0	0.0	0.12	3.35	0.00	0.00
C	150.0	0.00	0.0	0.0	0.03	0.72	0.00	0.00
C	130.0	0.00	0.0	0.0	0.02	0.72	0.00	0.00
C	130.0	0.00	0.0	0.0	0.02	0.56	0.00	0.00
C	130.0	0.00	0.0	0.0	0.12	3.90	0.00	0.00
C	110.0	0.00	0.0	0.0	0.01	0.56	0.00	0.00
C	110.0	0.00	0.0	0.0	0.02	0.72	0.00	0.00
C	110.0	0.00	0.0	0.0	0.10	4.06	0.00	0.00
C	90.0	0.00	0.0	0.0	0.01	0.56	0.00	0.00
C	90.0	0.00	0.0	0.0	0.01	0.72	0.00	0.00
C	90.0	0.00	0.0	0.0	0.10	5.61	0.00	0.00
C	70.0	0.00	0.0	0.0	0.01	0.72	0.00	0.00
C	70.0	0.00	0.0	0.0	0.01	0.56	0.00	0.00
C	70.0	0.00	0.0	0.0	0.08	5.78	0.00	0.00
C	50.0	0.00	0.0	0.0	0.00	0.56	0.00	0.00
C	50.0	0.00	0.0	0.0	0.01	0.72	0.00	0.00
C	50.0	0.00	0.0	0.0	0.05	6.22	0.00	0.00
C	30.0	0.00	0.0	0.0	0.00	0.56	0.00	0.00
C	30.0	0.00	0.0	0.0	0.00	0.72	0.00	0.00
C	30.0	0.00	0.0	0.0	0.03	6.52	0.00	0.00
C	10.0	0.00	0.0	0.0	0.00	0.72	0.00	0.00
C	10.0	0.00	0.0	0.0	0.01	6.78	0.00	0.00
C	10.0	0.00	0.0	0.0	0.00	0.56	0.00	0.00
D	255.0	0.00	180.0	180.0	0.00	0.00	0.00	0.00
D	0.0	0.00	180.0	180.0	0.00	0.00	0.00	0.00

==========
LOADING CONDITION n ==========

Seismic - Azimuth: 0◆ (0.9 D - 1.0 Ev + 1.0 Eh)

MAST LOADING
==========

LOAD TYPE	ELEV ft	APPLY..LOAD..AT RADIUS ft	AZI	LOAD AZI	.....FORCES..... HORIZ kip	DOWN kip	.....MOMENTS..... VERTICAL ft-kip	TORSNAL ft-kip
C	250.0	0.00	0.0	0.0	1.20	11.62	0.00	0.00
C	247.5	0.00	0.0	0.0	0.05	0.49	0.00	0.00
C	245.0	0.00	0.0	0.0	0.02	0.20	0.00	0.00
C	239.0	0.00	0.0	0.0	0.00	0.04	0.00	0.00
C	238.0	0.00	0.0	0.0	0.44	4.58	0.00	0.00
C	233.0	0.00	0.0	0.0	0.02	0.25	0.00	0.00
C	233.0	0.00	0.0	0.0	0.01	0.09	0.00	0.00
C	230.0	0.00	0.0	0.0	0.10	1.13	0.00	0.00
C	228.0	0.00	0.0	0.0	0.42	4.58	0.00	0.00
C	224.0	0.00	0.0	0.0	0.01	0.16	0.00	0.00
C	224.0	0.00	0.0	0.0	0.02	0.20	0.00	0.00
C	210.0	0.00	0.0	0.0	0.04	0.50	0.00	0.00
C	210.0	0.00	0.0	0.0	0.03	0.39	0.00	0.00
C	210.0	0.00	0.0	0.0	0.11	1.33	0.00	0.00
C	190.0	0.00	0.0	0.0	0.03	0.39	0.00	0.00
C	190.0	0.00	0.0	0.0	0.04	0.50	0.00	0.00
C	190.0	0.00	0.0	0.0	0.12	1.65	0.00	0.00
C	170.0	0.00	0.0	0.0	0.14	2.23	0.00	0.00
C	170.0	0.00	0.0	0.0	0.03	0.50	0.00	0.00
C	170.0	0.00	0.0	0.0	0.02	0.39	0.00	0.00
C	150.0	0.00	0.0	0.0	0.02	0.39	0.00	0.00
C	150.0	0.00	0.0	0.0	0.12	2.32	0.00	0.00
C	150.0	0.00	0.0	0.0	0.03	0.50	0.00	0.00
C	130.0	0.00	0.0	0.0	0.02	0.50	0.00	0.00
C	130.0	0.00	0.0	0.0	0.02	0.39	0.00	0.00
C	130.0	0.00	0.0	0.0	0.12	2.70	0.00	0.00
C	110.0	0.00	0.0	0.0	0.01	0.39	0.00	0.00
C	110.0	0.00	0.0	0.0	0.02	0.50	0.00	0.00
C	110.0	0.00	0.0	0.0	0.10	2.81	0.00	0.00
C	90.0	0.00	0.0	0.0	0.01	0.39	0.00	0.00
C	90.0	0.00	0.0	0.0	0.01	0.50	0.00	0.00
C	90.0	0.00	0.0	0.0	0.10	3.88	0.00	0.00
C	70.0	0.00	0.0	0.0	0.01	0.50	0.00	0.00
C	70.0	0.00	0.0	0.0	0.01	0.39	0.00	0.00
C	70.0	0.00	0.0	0.0	0.08	4.00	0.00	0.00
C	50.0	0.00	0.0	0.0	0.00	0.39	0.00	0.00
C	50.0	0.00	0.0	0.0	0.01	0.50	0.00	0.00
C	50.0	0.00	0.0	0.0	0.05	4.31	0.00	0.00
C	30.0	0.00	0.0	0.0	0.00	0.39	0.00	0.00
C	30.0	0.00	0.0	0.0	0.00	0.50	0.00	0.00
C	30.0	0.00	0.0	0.0	0.03	4.51	0.00	0.00
C	10.0	0.00	0.0	0.0	0.00	0.50	0.00	0.00
C	10.0	0.00	0.0	0.0	0.01	4.69	0.00	0.00
C	10.0	0.00	0.0	0.0	0.00	0.39	0.00	0.00
D	255.0	0.00	180.0	180.0	0.00	0.00	0.00	0.00
D	0.0	0.00	180.0	180.0	0.00	0.00	0.00	0.00

==========

MAXIMUM TENSION IN MAST MEMBERS (kip)
==========

ELEV ft	LEGS	DIAG	HORIZ	BRACE
255.0	----------		1.18 M	0.00 A
	1.07 S	1.78 G		
250.0	----------		0.18 G	0.00 A
	1.29 M	4.56 X		

```
245.0 ---------------------          0.28 I       0.00 A
         13.45 M       4.83 X
240.0 ---------------------          0.66 Y       0.00 A
         25.64 M       6.31 X
235.0 ---------------------          0.36 A       0.00 A
         42.70 M       7.88 F
230.0 ---------------------          0.09 S       0.00 A
         62.32 M       9.24 X
225.0 ---------------------          0.40 A       0.00 A
         86.28 M      10.57 F
220.0 ---------------------          0.56 S       0.00 A
        106.35 M       6.18 M
215.0 ---------------------          0.36 A       0.00 A
        121.19 M       5.82 G
210.0 ---------------------          0.04 A       0.00 A
        133.04 M       5.36 Q
205.0 ---------------------          0.26 A       0.00 A
        144.82 M       5.26 D
200.0 ---------------------          0.06 A       0.00 A
        155.01 M       5.04 Q
195.0 ---------------------          0.15 A       0.00 A
        164.99 M       5.01 K
190.0 ---------------------          0.10 A       0.00 A
        174.02 M       4.96 Q
185.0 ---------------------          0.11 A       0.00 A
        182.92 M       5.00 K
180.0 ---------------------          0.10 A       0.00 A
        192.40 M       5.44 Q
173.3 ---------------------          0.13 A       0.00 A
        203.12 M       5.47 K
166.7 ---------------------          0.09 A       0.00 A
        213.14 M       5.51 Q
160.0 ---------------------          0.11 A       0.00 A
        223.02 M       5.63 K
153.3 ---------------------          0.08 A       0.00 A
        232.45 M       5.68 Q
146.7 ---------------------          0.09 A       0.00 A
        241.78 M       5.87 K
140.0 ---------------------          0.07 A       0.00 A
        250.79 M       5.94 Q
133.3 ---------------------          0.15 A       0.00 A
        259.75 M       6.17 K
126.7 ---------------------          0.06 A       0.00 A
        268.59 M       6.37 K
120.0 ---------------------          0.10 A       0.00 A
        279.38 M       7.15 K
110.0 ---------------------          0.14 A       0.00 A
        292.26 M       7.37 W
100.0 ---------------------          0.08 A       0.00 A
        304.88 M       7.65 K
 90.0 ---------------------          0.07 A       0.00 A
        317.25 M       7.90 W
 80.0 ---------------------          0.07 A       0.00 A
        329.54 M       8.21 K
 70.0 ---------------------          0.07 A       0.00 A
        341.70 M       8.48 K
 60.0 ---------------------          0.06 A       0.00 A
        353.76 M       8.78 K
 50.0 ---------------------          0.06 A       0.00 A
        365.73 M       9.08 K
 40.0 ---------------------          0.06 A       0.00 A
        377.62 M       9.38 K
 30.0 ---------------------          0.05 A       0.00 A
        389.40 M       9.65 K
 20.0 ---------------------          0.01 k       0.00 A
        401.06 M       9.93 K
 10.0 ---------------------          0.05 A       0.00 A
        412.53 M      10.09 K
  0.0 ---------------------          0.00 A       0.00 A
```

MAXIMUM COMPRESSION IN MAST MEMBERS (kip)
==========

ELEV ft	LEGS	DIAG	HORIZ	BRACE
255.0	----------		-1.22 G	0.00 A
	-1.21 A	-1.72 M		
250.0	----------		-0.17 M	0.00 A
	-14.66 e	-4.65 F		
245.0	----------		-0.12 O	0.00 A
	-23.27 G	-5.00 F		
240.0	----------		0.00 A	0.00 A
	-37.67 G	-6.79 F		
235.0	----------		-0.22 S	0.00 A
	-57.86 G	-7.60 X		
230.0	----------		-0.12 A	0.00 A
	-79.63 G	-9.48 F		
225.0	----------		-0.27 S	0.00 A
	-106.15 G	-10.52 F		
220.0	----------		-0.91 A	0.00 A
	-126.32 G	-6.69 G		
215.0	----------		-0.27 S	0.00 A
	-142.66 G	-5.60 P		
210.0	----------		-0.03 S	0.00 A
	-154.61 G	-5.68 K		
205.0	----------		-0.20 S	0.00 A
	-167.44 G	-5.16 V		
200.0	----------		-0.05 S	0.00 A
	-178.05 G	-5.28 K		
195.0	----------		-0.11 S	0.00 A
	-188.96 G	-4.95 V		
190.0	----------		-0.08 S	0.00 A
	-198.57 G	-5.18 K		
185.0	----------		-0.09 S	0.00 A
	-208.34 G	-4.93 W		
180.0	----------		-0.09 S	0.00 A
	-218.63 G	-5.69 K		
173.3	----------		-0.10 S	0.00 A
	-230.64 G	-5.51 K		
166.7	----------		-0.08 S	0.00 A
	-241.74 G	-5.77 K		
160.0	----------		-0.09 S	0.00 A
	-252.91 G	-5.72 K		
153.3	----------		-0.07 S	0.00 A
	-263.51 G	-5.97 K		
146.7	----------		-0.07 S	0.00 A
	-274.14 G	-5.98 K		
140.0	----------		-0.06 S	0.00 A
	-284.41 G	-6.26 K		
133.3	----------		-0.13 S	0.00 A
	-294.74 G	-6.39 K		
126.7	----------		-0.05 S	0.00 A
	-304.95 G	-6.58 K		
120.0	----------		-0.08 S	0.00 A
	-317.50 G	-7.52 K		
110.0	----------		-0.11 S	0.00 A
	-332.55 G	-7.73 K		
100.0	----------		-0.07 S	0.00 A
	-347.57 G	-7.96 K		
90.0	----------		-0.06 S	0.00 A
	-362.57 G	-8.26 K		
80.0	----------		-0.06 S	0.00 A

```
          -377.54 G      -8.52 K
    70.0  ---------------------        -0.05 S       0.00 A
          -392.43 G      -8.81 K
    60.0  ---------------------        -0.05 S       0.00 A
          -407.31 G      -9.10 K
    50.0  ---------------------        -0.05 S       0.00 A
          -422.18 G      -9.41 K
    40.0  ---------------------        -0.05 S       0.00 A
          -437.04 G      -9.69 K
    30.0  ---------------------        -0.04 S       0.00 A
          -451.84 G      -9.94 K
    20.0  ---------------------         0.00 S       0.00 A
          -466.57 G     -10.15 K
    10.0  ---------------------        -0.04 S       0.00 A
          -481.12 G     -10.42 K
     0.0  ---------------------         0.00 A       0.00 A
```

FORCE/RESISTANCE RATIO IN LEGS
==========

MAST ELEV ft	-- LEG COMPRESSION - MAX COMP	COMP RESIST	FORCE/ RESIST RATIO	---- LEG TENSION --- MAX TENS	TENS RESIST	FORCE/ RESIST RATIO
255.00	1.21	31.48	0.04	1.07	48.15	0.02
250.00	14.66	31.48	0.47	1.29	48.15	0.03
245.00	23.27	31.48	0.74	13.45	48.15	0.28
240.00	37.67	110.98	0.34	25.64	135.90	0.19
235.00	57.86	110.98	0.52	42.70	135.90	0.31
230.00	79.63	110.98	0.72	62.32	135.90	0.46
225.00	106.15	110.98	0.96	86.28	135.90	0.63
220.00	126.32	175.98	0.72	106.35	198.45	0.54
215.00	142.66	175.98	0.81	121.19	198.45	0.61
210.00	154.61	175.98	0.88	133.04	198.45	0.67
205.00	167.44	175.98	0.95	144.82	198.45	0.73
200.00	178.05	254.38	0.70	155.01	274.95	0.56
195.00	188.96	254.38	0.74	164.99	274.95	0.60
190.00	198.57	254.38	0.78	174.02	274.95	0.63
185.00	208.34	254.38	0.82	182.92	274.95	0.67
180.00	218.63	309.64	0.71	192.40	327.10	0.59
173.33	230.64	309.64	0.74	203.12	327.10	0.62
166.67	241.74	309.64	0.78	213.14	327.10	0.65
160.00	252.91	309.64	0.82	223.02	327.10	0.68
153.33	263.51	309.64	0.85	232.45	327.10	0.71
146.67	274.14	309.64	0.89	241.78	327.10	0.74
140.00						

	284.41	309.64	0.92	250.79	357.75	0.70
133.33						
	294.74	309.64	0.95	259.75	357.75	0.73
126.67						
	304.95	309.64	0.98	268.59	357.75	0.75
120.00						
	317.50	334.65	0.95	279.38	378.00	0.74
110.00						
	332.55	334.65	0.99	292.26	378.00	0.77
100.00						
	347.57	507.33	0.69	304.88	523.32	0.58
90.00						
	362.57	507.33	0.71	317.25	523.32	0.61
80.00						
	377.54	507.33	0.74	329.54	523.32	0.63
70.00						
	392.43	507.33	0.77	341.70	523.32	0.65
60.00						
	407.31	507.33	0.80	353.76	523.32	0.68
50.00						
	422.18	507.33	0.83	365.73	523.32	0.70
40.00						
	437.04	507.33	0.86	377.62	523.32	0.72
30.00						
	451.84	507.33	0.89	389.40	523.32	0.74
20.00						
	466.57	507.33	0.92	401.06	576.00	0.70
10.00						
	481.12	507.33	0.95	412.53	576.00	0.72
0.00						

FORCE/RESISTANCE RATIO IN DIAGONALS
==========

MAST ELEV ft	- DIAG COMPRESSION - MAX COMP	COMP RESIST	FORCE/ RESIST RATIO	--- DIAG TENSION -- MAX TENS	TENS RESIST	FORCE/ RESIST RATIO
255.00						
	1.72	7.16	0.24	1.78	7.16	0.25
250.00						
	4.65	7.16	0.65	4.56	7.16	0.64
245.00						
	5.00	7.16	0.70	4.83	7.16	0.68
240.00						
	6.79	10.74	0.63	6.31	10.74	0.59
235.00						
	7.60	10.74	0.71	7.88	10.74	0.73
230.00						
	9.48	10.74	0.88	9.24	10.74	0.86
225.00						
	10.52	10.74	0.98	10.57	10.74	0.98
220.00						
	6.69	7.16	0.93	6.18	7.16	0.86
215.00						
	5.60	7.16	0.78	5.82	7.16	0.81
210.00						
	5.68	7.16	0.79	5.36	7.16	0.75
205.00						
	5.16	7.16	0.72	5.26	7.16	0.73
200.00						
	5.28	5.63	0.94	5.04	5.63	0.90
195.00						
	4.95	5.63	0.88	5.01	5.63	0.89
190.00						
	5.18	5.63	0.92	4.96	5.63	0.88
185.00						
	4.93	5.63	0.88	5.00	5.63	0.89

```
180.00 ----------------------------------------------
          5.69    9.84    0.58    5.44    9.84    0.55
173.33 ----------------------------------------------
          5.51    9.84    0.56    5.47    9.84    0.56
166.67 ----------------------------------------------
          5.77    9.84    0.59    5.51    9.84    0.56
160.00 ----------------------------------------------
          5.72    7.46    0.77    5.63    7.46    0.75
153.33 ----------------------------------------------
          5.97    7.46    0.80    5.68    7.46    0.76
146.67 ----------------------------------------------
          5.98    7.46    0.80    5.87    7.46    0.79
140.00 ----------------------------------------------
          6.26   10.34    0.61    5.94   10.34    0.57
133.33 ----------------------------------------------
          6.39   10.34    0.62    6.17   10.34    0.60
126.67 ----------------------------------------------
          6.58   10.34    0.64    6.37   10.34    0.62
120.00 ----------------------------------------------
          7.52    9.19    0.82    7.15    9.19    0.78
110.00 ----------------------------------------------
          7.73    9.19    0.84    7.37    9.19    0.80
100.00 ----------------------------------------------
          7.96   12.53    0.64    7.65   12.53    0.61
 90.00 ----------------------------------------------
          8.26   12.53    0.66    7.90   12.53    0.63
 80.00 ----------------------------------------------
          8.52   10.73    0.79    8.21   10.73    0.77
 70.00 ----------------------------------------------
          8.81   10.73    0.82    8.48   10.73    0.79
 60.00 ----------------------------------------------
          9.10   13.43    0.68    8.78   13.43    0.65
 50.00 ----------------------------------------------
          9.41   13.43    0.70    9.08   13.43    0.68
 40.00 ----------------------------------------------
          9.69   14.31    0.68    9.38   14.31    0.66
 30.00 ----------------------------------------------
          9.94   14.31    0.69    9.65   14.31    0.67
 20.00 ----------------------------------------------
         10.15   12.68    0.80    9.93   12.68    0.78
 10.00 ----------------------------------------------
         10.42   12.68    0.82   10.09   12.68    0.80
  0.00 ----------------------------------------------

MAXIMUM INDIVIDUAL FOUNDATION LOADS: (kip)
==========================================

    --------------LOAD---COMPONENTS-------------        TOTAL
    NORTH          EAST          DOWN       UPLIFT        SHEAR

    43.64 G      37.69 K     487.69 G    -417.61 M      43.64 G


MAXIMUM TOTAL LOADS ON FOUNDATION : (kip & kip-ft)
==================================================

  ------HORIZONTAL-----     DOWN       ---------OVERTURNING--------- TORSION
  NORTH    EAST   TOTAL                NORTH        EAST       TOTAL
                @   0.0                                        @   0.0

   70.5    61.5    70.5   213.4     10717.5     -9539.5     10717.5   -48.9
     G       V       G       g           G           D           G       R


==============================================================================


==============================================================================
Latticed Tower Analysis (Unguyed)            (c)2024 Guymast Inc. 416-736-7453
```

Processed under license at:

Sabre Towers and Poles on: 23 dec 2025 at: 9:44:47

==========

****
********** Service Load Condition **********
****

==========
* Only 1 condition(s) shown in full

==========
LOADING CONDITION A ==========

60 mph wind with no ice. Wind Azimuth: 0◆ (1.0 D + 1.0 Wo)

MAST LOADING
==========

LOAD TYPE	ELEV ft	APPLY..LOAD..AT RADIUS ft	AZI	LOAD AZI	.....FORCES..... HORIZ kip	DOWN kip	.....MOMENTS..... VERTICAL ft-kip	TORSNAL ft-kip
C	250.0	0.00	0.0	0.0	2.57	13.53	0.00	0.00
C	238.0	0.00	0.0	0.0	1.28	5.34	0.00	0.00
C	228.0	0.00	0.0	0.0	1.27	5.34	0.00	0.00
D	255.0	0.00	180.0	0.0	0.02	0.03	0.00	0.00
D	250.0	0.00	180.0	0.0	0.02	0.03	0.00	0.00
D	250.0	0.00	318.0	0.0	0.04	0.05	0.05	-0.03
D	240.0	0.00	318.0	0.0	0.04	0.05	0.05	-0.03
D	240.0	0.00	330.8	0.0	0.05	0.09	0.05	-0.02
D	230.0	0.00	338.4	0.0	0.05	0.09	0.05	-0.01
D	230.0	0.00	355.4	0.0	0.05	0.10	0.05	-0.01
D	220.0	0.00	6.2	0.0	0.05	0.10	0.05	-0.01
D	220.0	0.00	13.8	0.0	0.05	0.11	0.06	-0.01
D	200.0	0.00	7.2	0.0	0.05	0.11	0.06	-0.01
D	200.0	0.00	20.3	0.0	0.05	0.13	0.08	0.00
D	180.0	0.00	15.8	0.0	0.06	0.13	0.07	0.00
D	180.0	0.00	24.7	0.0	0.06	0.16	0.09	0.00
D	160.0	0.00	21.8	0.0	0.06	0.17	0.08	0.00
D	160.0	0.00	28.0	0.0	0.06	0.17	0.10	0.01
D	140.0	0.00	25.9	0.0	0.06	0.17	0.10	0.01
D	140.0	0.00	30.6	0.0	0.06	0.18	0.12	0.01
D	120.0	0.00	28.9	0.0	0.06	0.19	0.11	0.01
D	120.0	0.00	32.4	0.0	0.06	0.19	0.13	0.02
D	100.0	0.00	31.4	0.0	0.06	0.19	0.13	0.01
D	100.0	0.00	34.0	0.0	0.06	0.25	0.15	0.02
D	80.0	0.00	33.2	0.0	0.06	0.25	0.14	0.02
D	80.0	0.00	35.3	0.0	0.06	0.26	0.16	0.02
D	60.0	0.00	34.7	0.0	0.06	0.26	0.15	0.02
D	60.0	0.00	36.4	0.0	0.06	0.28	0.18	0.02
D	40.0	0.00	35.9	0.0	0.06	0.28	0.17	0.02
D	40.0	0.00	37.4	0.0	0.06	0.28	0.19	0.02
D	20.0	0.00	36.9	0.0	0.06	0.29	0.18	0.02
D	20.0	0.00	38.2	0.0	0.05	0.29	0.21	0.02
D	0.0	0.00	37.8	0.0	0.05	0.29	0.20	0.02

==========
MAXIMUM MAST DISPLACEMENTS:
==========

ELEV ft	------DEFLECTIONS (ft)----- NORTH	EAST	DOWN	--TILTS (DEG)--- NORTH	EAST	TWIST DEG
255.0	1.092 G	0.997 J	0.018 G	0.593 G	0.550 J	-0.056 E
250.0	1.040 G	0.949 J	0.018 G	0.594 G	0.551 J	-0.056 E
245.0	0.987 G	0.900 J	0.017 G	0.589 G	0.546 J	-0.056 E
240.0	0.936 G	0.853 J	0.016 G	0.573 G	0.530 J	-0.056 E
235.0	0.885 G	0.806 J	0.016 G	0.563 G	0.521 J	-0.055 E
230.0	0.836 G	0.760 J	0.015 G	0.547 G	0.505 J	-0.055 E
225.0	0.788 G	0.716 J	0.014 G	0.524 G	0.483 J	-0.054 E
220.0	0.742 G	0.674 J	0.014 G	0.493 G	0.454 J	-0.052 E
215.0	0.699 G	0.634 J	0.013 G	0.469 G	0.432 J	-0.049 E
210.0	0.658 G	0.596 J	0.013 G	0.446 G	0.409 J	-0.047 E
205.0	0.619 G	0.560 J	0.012 G	0.421 G	0.386 J	-0.044 E
200.0	0.583 G	0.527 J	0.012 G	0.397 G	0.363 J	-0.041 E
195.0	0.548 G	0.495 J	0.011 G	0.379 G	0.347 J	-0.038 E
190.0	0.515 G	0.465 J	0.011 G	0.362 G	0.331 J	-0.036 E
185.0	0.483 G	0.436 J	0.011 G	0.345 G	0.314 J	0.033 L
180.0	0.453 G	0.408 J	0.010 G	0.328 G	0.299 J	0.031 L
173.3	0.415 G	0.374 J	0.010 G	0.310 G	0.282 J	0.029 L
166.7	0.379 G	0.341 J	0.009 G	0.293 G	0.266 J	0.028 L
160.0	0.345 G	0.311 J	0.009 G	0.276 G	0.251 J	0.026 L
153.3	0.314 G	0.282 J	0.009 G	0.259 G	0.235 J	0.024 L
146.7	0.284 G	0.255 J	0.008 G	0.242 G	0.220 J	-0.023 F
140.0	0.255 G	0.229 J	0.008 G	0.226 G	0.205 J	-0.021 F
133.3	0.229 G	0.206 J	0.007 G	0.210 G	0.190 J	0.019 L
126.7	0.206 G	0.184 J	0.007 G	0.194 G	0.176 J	0.018 L
120.0	0.183 G	0.164 J	0.007 G	0.179 G	0.161 J	0.016 L
110.0	0.153 G	0.137 J	0.006 G	0.156 G	0.141 J	0.015 L
100.0	0.127 G	0.113 J	0.005 G	0.134 G	0.121 J	0.013 L
90.0	0.104 G	0.093 J	0.005 G	0.120 G	0.108 J	0.012 L
80.0	0.083 G	0.074 J	0.004 G	0.106 G	0.096 J	0.010 L
70.0	0.065 G	0.058 J	0.004 G	0.093 G	0.083 J	0.009 L
60.0	0.049 G	0.043 J	0.003 G	0.079 G	0.071 J	0.008 L
50.0	0.035 G	0.031 J	0.003 G	0.066 G	0.059 J	0.006 L
40.0	0.024 G	0.021 J	0.002 G	0.052 G	0.047 J	0.005 L
30.0	0.015 G	0.013 J	0.002 K	0.039 G	0.035 J	0.004 L
20.0	0.008 G	0.007 J	0.001 K	0.026 G	0.023 J	-0.003 F
10.0	0.002 G	-0.002 D	0.001 K	0.013 G	0.011 J	-0.001 F
0.0	0.000 A	0.000 A	0.000 A	0.000 A	0.000 A	0.000 A

MAXIMUM TENSION IN MAST MEMBERS (kip)
==========

ELEV ft	LEGS	DIAG	HORIZ	BRACE
255.0	----------		0.33 A	0.00 A
	0.26 G	0.53 G		
250.0	----------		0.06 G	0.00 A
	0.00 A	1.29 L		
245.0	----------		0.13 E	0.00 A
	0.47 A	1.33 F		
240.0	----------		0.22 D	0.00 A
	3.26 A	1.64 L		
235.0	----------		0.15 A	0.00 A
	7.13 A	2.34 F		
230.0	----------		0.02 G	0.00 A
	12.09 A	2.56 L		
225.0	----------		0.16 A	0.00 A
	18.15 A	3.03 F		
220.0	----------		0.04 G	0.00 A
	23.96 A	1.62 A		
215.0	----------		0.13 A	0.00 A
	27.76 A	1.73 G		
210.0	----------		0.01 A	0.00 A
	31.20 A	1.46 E		

```
205.0 ---------------------          0.09 A       0.00 A
          34.29 A       1.54 J
200.0 ---------------------          0.02 A       0.00 A
          37.15 A       1.41 E
195.0 ---------------------          0.05 A       0.00 A
          39.79 A       1.46 K
190.0 ---------------------          0.03 A       0.00 A
          42.27 A       1.40 E
185.0 ---------------------          0.04 A       0.00 A
          44.63 A       1.45 K
180.0 ---------------------          0.04 A       0.00 A
          47.19 A       1.54 E
173.3 ---------------------          0.04 A       0.00 A
          49.98 A       1.59 K
166.7 ---------------------          0.03 A       0.00 A
          52.64 A       1.57 E
160.0 ---------------------          0.04 A       0.00 A
          55.21 A       1.63 K
153.3 ---------------------          0.03 A       0.00 A
          57.69 A       1.63 E
146.7 ---------------------          0.03 A       0.00 A
          60.11 A       1.70 K
140.0 ---------------------          0.03 A       0.00 A
          62.46 A       1.72 E
133.3 ---------------------          0.05 A       0.00 A
          64.76 A       1.79 K
126.7 ---------------------          0.02 A       0.00 A
          67.04 A       1.84 K
120.0 ---------------------          0.03 A       0.00 A
          69.81 A       2.07 K
110.0 ---------------------          0.05 A       0.00 A
          73.12 A       2.14 K
100.0 ---------------------          0.03 A       0.00 A
          76.27 A       2.22 K
 90.0 ---------------------          0.03 A       0.00 A
          79.29 A       2.30 K
 80.0 ---------------------          0.02 A       0.00 A
          82.27 A       2.39 K
 70.0 ---------------------          0.02 A       0.00 A
          85.24 A       2.47 K
 60.0 ---------------------          0.02 A       0.00 A
          88.13 A       2.57 K
 50.0 ---------------------          0.02 A       0.00 A
          91.00 A       2.66 K
 40.0 ---------------------          0.02 A       0.00 A
          93.82 A       2.75 K
 30.0 ---------------------          0.02 A       0.00 A
          96.63 A       2.83 K
 20.0 ---------------------          0.00 A       0.00 A
          99.37 A       2.91 K
 10.0 ---------------------          0.02 A       0.00 A
         102.08 A       2.96 K
  0.0 ---------------------          0.00 A       0.00 A
```

MAXIMUM COMPRESSION IN MAST MEMBERS (kip)
==========

```
 ELEV      LEGS          DIAG         HORIZ         BRACE
   ft

255.0 ---------------------         -0.36 G       0.00 A
          -0.39 A      -0.47 A
250.0 ---------------------         -0.04 A       0.00 A
          -6.12 G      -1.36 F
```

```
245.0 ---------------------          0.00 A       0.00 A
        -9.68 G      -1.48 L
240.0 ---------------------          0.00 A       0.00 A
       -14.44 G      -2.09 L
235.0 ---------------------         -0.01 G       0.00 A
       -21.12 G      -2.08 L
230.0 ---------------------         -0.04 A       0.00 A
       -27.92 G      -2.78 F
225.0 ---------------------         -0.03 G       0.00 A
       -36.20 G      -2.99 L
220.0 ---------------------         -0.37 A       0.00 A
       -41.90 G      -2.04 G
215.0 ---------------------         -0.04 G       0.00 A
       -46.96 G      -1.52 J
210.0 ---------------------         -0.01 G       0.00 A
       -50.32 G      -1.69 K
205.0 ---------------------         -0.03 G       0.00 A
       -54.23 G      -1.44 J
200.0 ---------------------         -0.01 G       0.00 A
       -57.32 G      -1.55 K
195.0 ---------------------         -0.02 G       0.00 A
       -60.66 G      -1.40 J
190.0 ---------------------         -0.02 G       0.00 A
       -63.52 G      -1.52 K
185.0 ---------------------         -0.02 G       0.00 A
       -66.52 G      -1.41 K
180.0 ---------------------         -0.02 G       0.00 A
       -69.64 G      -1.67 K
173.3 ---------------------         -0.02 G       0.00 A
       -73.39 G      -1.58 K
166.7 ---------------------         -0.02 G       0.00 A
       -76.82 G      -1.69 K
160.0 ---------------------         -0.02 G       0.00 A
       -80.32 G      -1.66 K
153.3 ---------------------         -0.01 G       0.00 A
       -83.63 G      -1.75 K
146.7 ---------------------         -0.02 G       0.00 A
       -86.99 G      -1.74 K
140.0 ---------------------         -0.01 G       0.00 A
       -90.22 G      -1.83 K
133.3 ---------------------         -0.03 G       0.00 A
       -93.51 G      -1.86 K
126.7 ---------------------         -0.01 G       0.00 A
       -96.75 G      -1.92 K
120.0 ---------------------         -0.02 G       0.00 A
      -100.75 G      -2.20 K
110.0 ---------------------         -0.02 G       0.00 A
      -105.57 G      -2.27 K
100.0 ---------------------         -0.01 G       0.00 A
      -110.45 G      -2.34 K
 90.0 ---------------------         -0.01 G       0.00 A
      -115.40 G      -2.43 K
 80.0 ---------------------         -0.01 G       0.00 A
      -120.35 G      -2.51 K
 70.0 ---------------------         -0.01 G       0.00 A
      -125.29 G      -2.60 K
 60.0 ---------------------         -0.01 G       0.00 A
      -130.25 G      -2.69 K
 50.0 ---------------------         -0.01 G       0.00 A
      -135.23 G      -2.78 K
 40.0 ---------------------         -0.01 G       0.00 A
      -140.22 G      -2.87 K
 30.0 ---------------------         -0.01 G       0.00 A
      -145.21 G      -2.94 K
 20.0 ---------------------          0.00 G       0.00 A
      -150.18 G      -3.01 K
 10.0 ---------------------         -0.01 G       0.00 A
      -155.12 G      -3.08 K
  0.0 ---------------------          0.00 A       0.00 A
```

MAXIMUM INDIVIDUAL FOUNDATION LOADS: (kip)
==========

----------LOAD---COMPONENTS----------				TOTAL
NORTH	EAST	DOWN	UPLIFT	SHEAR
13.62 G	11.76 K	157.37 G	-103.24 A	13.62 G

MAXIMUM TOTAL LOADS ON FOUNDATION : (kip & kip-ft)
==========

------HORIZONTAL-----			DOWN	---------OVERTURNING---------			TORSION
NORTH	EAST	TOTAL		NORTH	EAST	TOTAL	
		@ 0.0				@ 0.0	
20.5	17.9	20.5	73.3	3108.0	2773.3	3108.0	-13.9
G	J	G	K	G	J	G	F

==========

Seismic Load Effects
Equivalent Lateral Force Procedure
ANSI/TIA-222-G

Parameters	
Risk Category	II
R	3.000
S_S	0.193
S_1	0.102
Site Class	D (default)
T_L (sec)	12.000
F_a	1.600
F_v	2.396
S_{MS}	0.309
S_{M1}	0.244
S_{DS}	0.206
S_{D1}	0.163
T_s	0.791
I_e	1.000
Ω	1.500
C_S	0.046
h (ft)	255.00
K_f	4,540
W_a (ft)	14.49
W_o (ft)	27.00
W (kips)	78.637
W_1 (kips)	34.444
W_2 (kips)	14.240
f_1 (Hertz)	0.851
T (sec)	1.175
k_e	1.3375
V_s (kips)	3.617
Seismic Design Category	C

Vertical Distribution of Seismic Forces

Description	h_i (ft.)	w_i (kips)	W_2 (kips)	$w_i h_i^{ke}$	F_{s2} or E_h (kips)	E_V (kips)	1.2 D + 1.0 E_V (kips)	0.9 D - 1.0 E_V (kips)
Mount/Antenna Load	250.00	13.5330	13.5330	21,809.1552	1.1968	0.5576	16.7972	11.6221
Structure - Section 1	247.50	0.5650	0.4803	898.3701	0.0493	0.0233	0.7013	0.4852
Ladder/Line	245.00	0.2272	0.2272	356.3838	0.0196	0.0094	0.2820	0.1951
Ladder/Line	239.00	0.0454	0.0000	68.8911	0.0038	0.0019	0.0564	0.0390
Mount/Antenna Load	238.00	5.3350	0.0000	8,050.1895	0.4418	0.2198	6.6218	4.5817
Ladder/Line	233.00	0.2896	0.0000	424.7536	0.0233	0.0119	0.3594	0.2487
Ladder/Line	233.00	0.1024	0.0000	150.1891	0.0082	0.0042	0.1271	0.0880
Structure - Section 2	230.00	1.3190	0.0000	1,901.3225	0.1043	0.0543	1.6371	1.1328
Mount/Antenna Load	228.00	5.3350	0.0000	7,601.0271	0.4171	0.2198	6.6218	4.5817
Ladder/Line	224.00	0.2317	0.0000	322.3909	0.0177	0.0095	0.2875	0.1990
Ladder/Line	224.00	0.1818	0.0000	252.9593	0.0139	0.0075	0.2257	0.1561
Ladder/Line	210.00	0.5792	0.0000	739.2594	0.0406	0.0239	0.7189	0.4974
Ladder/Line	210.00	0.4544	0.0000	579.9715	0.0318	0.0187	0.5640	0.3903
Structure - Section 3	210.00	1.5540	0.0000	1,983.4412	0.1088	0.0640	1.9288	1.3346
Ladder/Line	190.00	0.4544	0.0000	507.3075	0.0278	0.0187	0.5640	0.3903
Ladder/Line	190.00	0.5792	0.0000	646.6384	0.0355	0.0239	0.7189	0.4974
Structure - Section 4	190.00	1.9250	0.0000	2,149.1349	0.1179	0.0793	2.3893	1.6532
Ladder/Line	170.00	0.5792	0.0000	557.2550	0.0306	0.0239	0.7189	0.4974
Ladder/Line	170.00	0.4544	0.0000	437.1835	0.0240	0.0187	0.5640	0.3903
Structure - Section 5	170.00	2.6010	0.0000	2,502.4522	0.1373	0.1072	3.2284	2.2337
Ladder/Line	150.00	0.4544	0.0000	369.7944	0.0203	0.0187	0.5640	0.3903
Ladder/Line	150.00	0.5792	0.0000	471.3577	0.0259	0.0239	0.7189	0.4974
Structure - Section 6	150.00	2.6990	0.0000	2,196.4683	0.1205	0.1112	3.3500	2.3179
Ladder/Line	130.00	0.5792	0.0000	389.2493	0.0214	0.0239	0.7189	0.4974
Ladder/Line	130.00	0.4544	0.0000	305.3779	0.0168	0.0187	0.5640	0.3903
Structure - Section 7	130.00	3.1450	0.0000	2,113.5858	0.1160	0.1296	3.9036	2.7009
Ladder/Line	110.00	0.5792	0.0000	311.3087	0.0171	0.0239	0.7189	0.4974
Ladder/Line	110.00	0.4544	0.0000	244.2311	0.0134	0.0187	0.5640	0.3903
Structure - Section 8	110.00	3.2740	0.0000	1,759.7112	0.0966	0.1349	4.0637	2.8117
Ladder/Line	90.00	0.4544	0.0000	186.7401	0.0102	0.0187	0.5640	0.3903
Ladder/Line	90.00	0.5792	0.0000	238.0279	0.0131	0.0239	0.7189	0.4974
Structure - Section 9	90.00	4.5180	0.0000	1,856.7164	0.1019	0.1861	5.6077	3.8801
Ladder/Line	70.00	0.4544	0.0000	133.4311	0.0073	0.0187	0.5640	0.3903
Ladder/Line	70.00	0.5792	0.0000	170.0776	0.0093	0.0239	0.7189	0.4974
Structure - Section 10	70.00	4.6540	0.0000	1,366.6113	0.0750	0.1917	5.7765	3.9969

Seismic Load Effects
Equivalent Lateral Force Procedure
ANSI/TIA-222-G

Vertical Distribution of Seismic Forces

Description	h_i (ft.)	w_i (kips)	W_2 (kips)	$w_i h_i^{ke}$	F_{sz} or E_h (kips)	E_V (kips)	1.2 D + 1.0 E_V (kips)	0.9 D - 1.0 E_V (kips)
Ladder/Line	50.00	0.4544	0.0000	85.0767	0.0047	0.0187	0.5640	0.3903
Ladder/Line	50.00	0.5792	0.0000	108.4429	0.0060	0.0239	0.7189	0.4974
Structure - Section 11	50.00	5.0130	0.0000	938.5774	0.0515	0.2065	6.2221	4.3052
Ladder/Line	30.00	0.4544	0.0000	42.9623	0.0024	0.0187	0.5640	0.3903
Ladder/Line	30.00	0.5792	0.0000	54.7619	0.0030	0.0239	0.7189	0.4974
Structure - Section 12	30.00	5.2530	0.0000	496.6576	0.0273	0.2164	6.5200	4.5113
Ladder/Line	10.00	0.5792	0.0000	12.5988	0.0007	0.0239	0.7189	0.4974
Ladder/Line	10.00	0.4544	0.0000	9.8841	0.0005	0.0187	0.5640	0.3903
Structure - Section 13	10.00	5.4660	0.0000	118.8967	0.0065	0.2252	6.7844	4.6942
	Σ	78.64	14.2405	65,918.82	3.62	3.24	97.60	67.53

Leg Connection Details												
Bottom Elevation (ft)	Top Elevation (ft)	Pipe Dimensions	Top Splice					Bottom Splice/Base				
			Bolt Qty.	Bolt Dia. (in)	Bolt Circle (in)	Plate Thickness (in)	Plate Dia. (in)	Bolt Qty.	Bolt Dia. (in)	Bolt Circle (in)	Plate Thickness (in)	Plate Dia. (in)
240	255	2.375 OD X .154						6	0.75	6.50	0.75	8.50
220	240	3.500 OD X .300	6	0.75	6.50	1.00	8.50	6	1.00	9.00	1.25	11.50
200	220	4.500 OD X .337	6	1.00	9.00	1.25	11.50	6	1.00	9.00	1.25	11.50
180	200	5.563 OD X .375	6	1.00	9.00	1.25	11.50	6	1.00	9.00	1.25	11.50
160	180	5.563 OD X .500	6	1.00	9.00	1.25	11.50	6	1.00	9.00	1.25	11.50
140	160	5.563 OD X .500	6	1.00	9.00	1.25	11.50	6	1.00	9.00	1.25	11.50
120	140	5.563 OD X .500	6	1.00	9.00	1.25	11.50	6	1.25	12.50	1.75	15.75
100	120	8.625 OD X .322	6	1.25	12.50	1.50	15.75	6	1.25	12.50	1.50	15.75
80	100	8.625 OD X .500	6	1.25	12.50	1.50	15.75	6	1.25	12.50	1.50	15.75
60	80	8.625 OD X .500	6	1.25	12.50	1.50	15.75	6	1.25	12.50	1.50	15.75
40	60	8.625 OD X .500	6	1.25	12.50	1.50	15.75	6	1.25	12.50	1.50	15.75
20	40	8.625 OD X .500	6	1.25	12.50	1.50	15.75	6	1.25	12.50	1.50	15.75
0	20	8.625 OD X .500	6	1.25	12.50	1.50	15.75	6	1.50	13.25	1.75	17.00

Diagonal Bracing Connection Details								
Bottom Elevation (ft)	Top Elevation (ft)	Angle Shape	Bolt Qty.	Bolt Dia. (in)	Bolt End Distance (in)	Bolt Spacing (in)	Gage Distance From Heel (in)	Gusset Plate Thickness (in)
240	255	L 2 X 2 X 1/8	1	0.625	1.500		1.125	0.375
220	240	L 2 X 2 X 3/16	1	0.625	1.500		1.125	0.375
200	220	L 2 X 2 X 1/8	1	0.625	1.500		1.125	0.375
180	200	L 2 X 2 X 1/8	1	0.625	1.500		1.125	0.375
160	180	L 2 1/2 X 2 1/2 X 3/16	1	0.625	1.500		1.375	0.375
140	160	L 2 1/2 X 2 1/2 X 3/16	1	0.625	1.500		1.375	0.375
120	140	L 3 X 3 X 3/16	1	0.750	1.500		1.750	0.375
100	120	L 3 X 3 X 1/4	1	0.750	1.625		1.750	0.375
80	100	L 3 1/2 X 3 1/2 X 1/4	1	0.750	1.625		1.750	0.375
60	80	L 3 1/2 X 3 1/2 X 1/4	1	0.750	1.625		1.750	0.375
40	60	L 4 X 4 X 1/4	1	0.750	1.625		2.000	0.375
20	40	L 4 X 4 X 1/4	2	0.625	1.625	2.1250	2.000	0.500
0	20	L 4 X 4 X 1/4	2	0.625	1.625	2.1250	2.000	0.500

LAST UPDATE : 2026-01-13

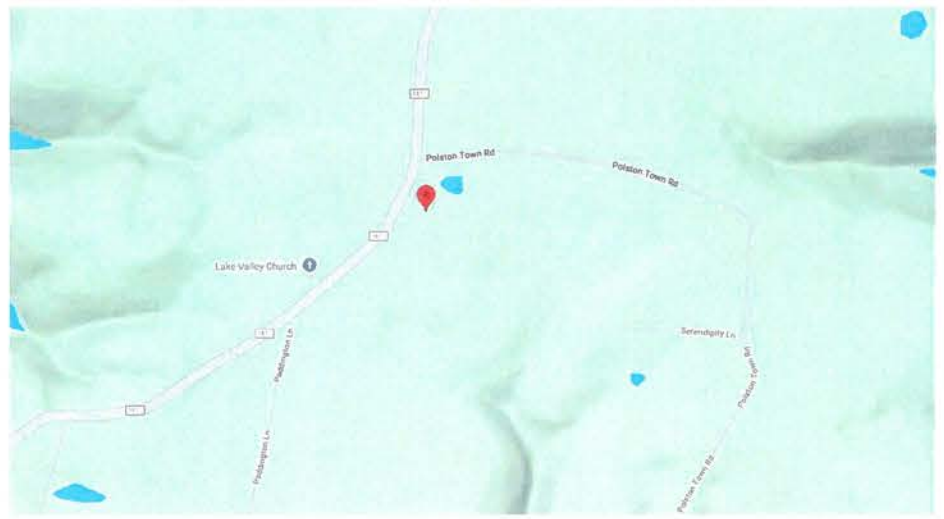

PROXIMITY MAP

LOCATION MAP

STARTING FROM KNOXVILLE MCGHEE TYSON AIRPORT (TYS), EXIT THE TERMINAL AND FOLLOW AIRPORT ROAD FOR A SHORT DISTANCE, THEN MERGE ONTO ALCOA HIGHWAY (US-129 NORTH) TOWARD KNOXVILLE. CONTINUE ON US-129 FOR ABOUT 30 MILES, PASSING THROUGH ALCOA AND MARYVILLE, UNTIL YOU APPROACH THE I-40/I-75 INTERCHANGE. STAY ON US-129 BRIEFLY AND THEN FOLLOW SIGNS TO MERGE ONTO I-75 NORTH TOWARD LEXINGTON. DRIVE APPROXIMATELY 10 MILES ON I-75 AND TAKE EXIT 134 FOR TN-63 EAST TOWARD JACKSBORO AND LA FOLLETTE. FOLLOW TN-63 FOR ABOUT 25 MILES THROUGH RURAL NORTHEAST TENNESSEE UNTIL YOU REACH THE JUNCTION WITH US-25E. TURN LEFT ONTO US-25E NORTH AND CONTINUE FOR ROUGHLY 20 MILES, PASSING HARROGATE AND HEADING TOWARD CUMBERLAND GAP NATIONAL HISTORICAL PARK. AS YOU NEAR THE PARK ENTRANCE, BEGIN WATCHING FOR LOCAL ACCESS ROADS LEADING TO THE DESTINATION.

DRIVING DIRECTIONS

PROJECT INFORMATION

SITE NAME:
CK LAKE VALLEY

SITE NUMBER:
KY0118

PROJECT LOCATION:

63 POLSTON TOWN ROAD, RUSSEL SPRINGS, KY 42642
(RUSSEL COUNTY)

LATITUDE	N 36°58'16.42"
LONGITUDE	W 84°58'53.50"
GROUND ELEVATION	955.2'±

SITE CONSTRUCTION MANAGER:	
NAME	TOWERCO
ADDRESS	5000 VALLEYSTONE DRIVE
CITY, STATE, ZIP	CARY, NC 27519
CONTACT	JENNIFER ADAMS
PHONE	(919) 653-5725
SITE APPLICANT:	
NAME	VERIZON WIRELESS
ADDRESS	N/A
CITY, STATE, ZIP	N/A
CONTACT	N/A
PHONE	N/A
SURVEYOR:	
NAME	THE LAND CONSULTANTS, LLC
ADDRESS	2820 15 TH AVE SW
CITY, STATE, ZIP	HUNTSVILLE, AL 35805
CONTACT	N/A
PHONE	(423)304-6722
CIVIL ENGINEER:	
NAME	TELETEK STRUCTURES
ADDRESS	1600 KING ST. N.
CITY, STATE, ZIP	ST. JACOBS, ON, N0B 2N0
CONTACT	LAURA MARCINIWE
PHONE	(519) 206-2060
GEOTECHNICAL ENGINEER:	
NAME	ENGINEERED TOWER SOLUTIONS, PLLC
ADDRESS	3227, WELLINGTON COURT
CITY, STATE, ZIP	RALEIGH, NC27615
CONTACT	JORGE VARELA, P.E
PHONE	(919) 782-2710
ELECTRICAL ENGINEER:	
NAME	SOUTH KY REC
ADDRESS	780 N MAIN ST
CITY, STATE, ZIP	MONTICELLO, KY 42633
CONTACT	N/A
PHONE	(606)348-6771
PROPERTY INFORMATION:	
NAME	N/A
ADDRESS	N/A
CITY, STATE, ZIP	N/A
CONTACT	N/A
PHONE	N/A
UTILITIES:	
POWER COMPANY	N/A
CONTACT	N/A
PHONE	N/A
PHONE# NEAR SITE	N/A

CONTACT INFORMATION

PROJECT DESCRIPTION:
FOUNDATION INSTALLATION CALCULATIONS

TOWER TYPE:
255.0' SELF SUPPORT TOWER

PROJECT INFORMATION

SHEET	DESCRIPTION	REV
KY0118-T1	TITLE SHEET	0
KY0118-C1	DESIGN CALCULATIONS	0

INDEX OF SHEETS

STATE OF KENTUCKY
RAPHAEL MOHAMED
24429
LICENSED
PROFESSIONAL ENGINEER

PREPARED BY.	FILE No.	REV.	DESCRIPTION	DATE	DWN BY	CHK BY
TELETEK STRUCTURES	3419	0	ISSUED FOR REVIEW	2026-01-14	JK	AK

TowerCo
5000 VALLEYSTONE DRIVE
CARY, NC 27519
(919) 653-5708

TELETEK STRUCTURES

SITE : **CK LAKE VALLEY**

CODE : **KY0118 [ENGTEL-1706]**

DRAWING TITLE :
TITLE SHEET

SCALE :	NONE
DATE :	2026-01-14
DRAWN BY :	JK
APPROVED BY :	SH
FILE No :	3419
DRAWING No :	**KY0118-T1**

C:\USERS\ALEXANDRA\DESKTOP\3419-KY0118 US FDN SSR MODEL (NOT MINE)\3419_KY0118_CALCULATIONS _14JAN2026_REV0.DWG

SST Unit Base Foundation

Site # :	KY0118
Site Name:	CK Lake Valley
Job #:	3419
TIA-222 Revision:	G

Top & Bot. Pad Rein. Different?:	☐
Tower Centroid Offset?:	☑
Block Foundation?:	☐
Rectangular Pad?:	☐

Superstructure Analysis Reactions		
Global Moment, **M**:	10718	ft-kips
Global Axial, **P**:	213.39	kips
Global Shear, **V**:	70.47	kips
Leg Compression, $\mathbf{P_{comp}}$:	488	kips
Leg Comp. Shear, $\mathbf{V_{u\_comp}}$:	43.64	kips
Leg Uplift, $\mathbf{P_{uplift}}$:	418	kips
Leg Uplift. Shear, $\mathbf{V_{u\_uplift}}$:	43.64	kips
Tower Height, **H**:	255	ft
Base Face Width, **BW**:	27	ft
BP Dist. Above Fdn, $\mathbf{bp_{dist}}$:	6	in

Foundation Analysis Checks	Capacity	Demand	Rating	Check
Lateral (Sliding) (kips)	402.04	70.47	**17.5%**	**Pass**
Bearing Pressure (ksf)	3.38	2.39	**70.8%**	**Pass**
*Overturning (kip*ft)*	14630.04	11903.33	**81.4%**	**Pass**
*Pier Flexure (Comp.) (kip*ft)*	1705.49	196.38	**11.5%**	**Pass**
*Pier Flexure (Tension) (kip*ft)*	838.11	196.38	**23.4%**	**Pass**
Pier Compression (kip)	6889.11	495.79	**7.2%**	**Pass**
*Pad Flexure (kip*ft)*	3022.01	733.84	**24.3%**	**Pass**
Pad Shear - 1-way (kips)	839.30	208.98	**24.9%**	**Pass**
Pad Shear - Comp 2-way (ksi)	0.201	0.137	**68.3%**	**Pass**

Pier Properties		
Pier Shape:	Circular	
Pier Diameter, **dpier**:	3.5	ft
Ext. Above Grade, **E**:	0.50	ft
Pier Rebar Size, **Sc**:	9	
Pier Rebar Quantity, **mc**:	18	
Pier Tie/Spiral Size, **St**:	4	
Pier Tie/Spiral Quantity, **mt**:	6	
Pier Reinforcement Type:	Tie	
Pier Clear Cover, $\mathbf{cc_{pier}}$:	3	in

Structural Rating:	**68.3%**
Soil Rating:	**81.4%**

Pad Properties		
Depth, **D**:	6.00	ft
Pad Width, $\mathbf{W_1}$:	36.00	ft
Pad Thickness, **T**:	2.00	ft
Pad Rebar Size (Bottom dir. 2), $\mathbf{Sp_2}$:	9	
Pad Rebar Quantity (Bottom dir. 2), $\mathbf{mp_2}$:	36	
Pad Clear Cover, $\mathbf{cc_{pad}}$:	3	in

Material Properties		
Rebar Grade, **Fy**:	60	ksi
Concrete Compressive Strength, **F'c**:	4.5	ksi
Dry Concrete Density, δ**c**:	150	pcf

Soil Properties		
Total Soil Unit Weight, γ:	120	pcf
Ultimate Gross Bearing, Qult:	4.500	ksf
Cohesion, **Cu**:		ksf
Friction Angle, φ:	30	degrees
SPT Blow Count, $\mathbf{N_{blows}}$:		
Base Friction, μ:	0.35	
Neglected Depth, **N**:	0.0	ft
Foundation Bearing on Rock?	No	
Groundwater Depth, **gw**:	n/a	ft

<-- Toggle between Gross and Net

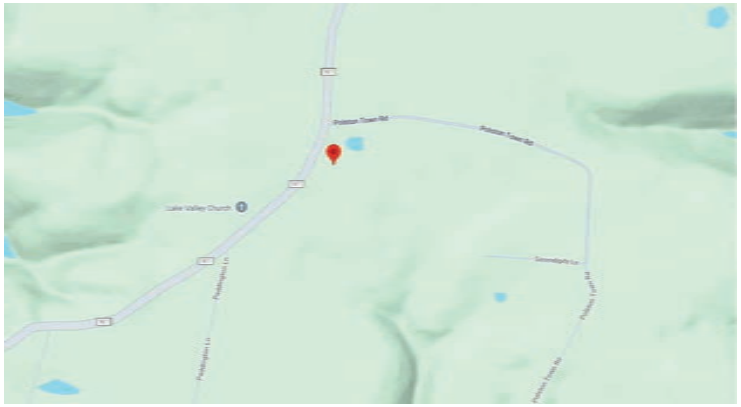

PROXIMITY MAP

LOCATION MAP

STARTING FROM KNOXVILLE MCGHEE TYSON AIRPORT (TYS), EXIT THE TERMINAL AND FOLLOW AIRPORT ROAD FOR A SHORT DISTANCE, THEN MERGE ONTO ALCOA HIGHWAY (US-129 NORTH) TOWARD KNOXVILLE. CONTINUE ON US-129 FOR ABOUT 30 MILES, PASSING THROUGH ALCOA AND MARYVILLE, UNTIL YOU APPROACH THE I-40/I-75 INTERCHANGE. STAY ON US-129 BRIEFLY AND THEN FOLLOW SIGNS TO MERGE ONTO I-75 NORTH TOWARD LEXINGTON. DRIVE APPROXIMATELY 10 MILES ON I-75 AND TAKE EXIT 134 FOR TN-63 EAST TOWARD JACKSBORO AND LA FOLLETTE. FOLLOW TN 63 FOR ABOUT 25 MILES THROUGH RURAL NORTHEAST TENNESSEE UNTIL YOU REACH THE JUNCTION WITH US-25E. TURN LEFT ONTO US-25E NORTH AND CONTINUE FOR ROUGHLY 20 MILES, PASSING HARROGATE AND HEADING TOWARD CUMBERLAND GAP NATIONAL HISTORICAL PARK. AS YOU NEAR THE PARK ENTRANCE, BEGIN WATCHING FOR LOCAL ACCESS ROADS LEADING TO THE DESTINATION.

DRIVING DIRECTIONS

PROJECT INFORMATION

SITE NAME:
CK LAKE VALLEY

SITE NUMBER:
KY0118

PROJECT LOCATION:

63 POLSTON TOWN ROAD, RUSSEL SPRINGS, KY 42642
(RUSSEL COUNTY)

LATITUDE	N 36°58'16.42"
LONGITUDE	W 84°58'53.50"
GROUND ELEVATION	955.2'±

SITE CONSTRUCTION MANAGER:

NAME	TOWERCO
ADDRESS	5000 VALLEYSTONE DRIVE
CITY, STATE, ZIP	CARY, NC 27519
CONTACT	JENNIFER ADAMS
PHONE	(919) 653-5725
SITE APPLICANT:	
NAME	VERIZON WIRELESS
ADDRESS	N/A
CITY, STATE, ZIP	N/A
CONTACT	N/A
PHONE	N/A
SURVEYOR:	
NAME	THE LAND CONSULTANTS, LLC
ADDRESS	2820 15 TH AVE SW
CITY, STATE, ZIP	HUNTSVILLE, AL 35805
CONTACT	N/A
PHONE	(423)304-6722
CIVIL ENGINEER:	
NAME	TELETEK STRUCTURES
ADDRESS	1600 KING ST. N.
CITY, STATE, ZIP	ST. JACOBS, ON, N0B 2N0
CONTACT	LAURA MARCINIWE
PHONE	(519) 206-2060
GEOTECHNICAL ENGINEER:	
NAME	ENGINEERED TOWER SOLUTIONS, PLLC
ADDRESS	3227, WELLINGTON COURT
CITY, STATE, ZIP	RALEIGH, NC27615
CONTACT	JORGE VARELA, P.E.
PHONE	(919) 782-2710
ELECTRICAL ENGINEER:	
NAME	SOUTH KY REC
ADDRESS	780 N MAIN ST
CITY, STATE, ZIP	MONTICELLO, KY 42633
CONTACT	N/A
PHONE	(606)348-6771
PROPERTY INFORMATION:	
NAME	N/A
ADDRESS	N/A
CITY, STATE, ZIP	N/A
CONTACT	N/A
PHONE	N/A
UTILITIES:	
POWER COMPANY	N/A
CONTACT	N/A
PHONE	N/A
PHONE# NEAR SITE	N/A

CONTACT INFORMATION

PROJECT DESCRIPTION:
FOUNDATION INSTALLATION DRAWINGS

TOWER TYPE:
255.0' SELF SUPPORT TOWER

PROJECT INFORMATION

SHEET	DESCRIPTION	REV
KY0118–T1	TITLE SHEET	0
KY0118–N1	PROJECT NOTES	0
KY0118–B1	BILL OF MATERIALS	0
KY0118–F1	FOUNDATION INSTALLATION DETAILS	0

INDEX OF SHEETS

811 Know what's below. Call 811 before you dig.

CALL 48 HOURS BEFORE YOU DIG

STATE OF KENTUCKY
RAPHAEL MOHAMED
24429
LICENSED
PROFESSIONAL ENGINEER

Raphael Mohamed

TELETEK STRUCTURES	3419	0	ISSUED FOR CONSTRUCTION	2026-01-14	JK	AK
PREPARED BY.	FILE No.	REV.	DESCRIPTION	DATE	DWN BY	CHK BY

TowerCo
5000 VALLEYSTONE DRIVE
CARY, NC 27519
(919) 653-5708

TELETEK STRUCTURES

SITE : **CK LAKE VALLEY**
CODE : **KY0118 [ENGTEL-1706]**
DRAWING TITLE :
TITLE SHEET

SCALE :	NONE
DATE :	2026-01-14
DRAWN BY :	JK
APPROVED BY :	SH
FILE No :	3419
DRAWING No :	**KY0118-T1**

S:\TELETEK JOB FILES\JOBS 3401-3450\3419 - TOWERCO - KY0118 CK LAKE VALLEY\DETAILING\CONSTRUCTION\3419-FOUNDATION DRAWING\3419_KY0118_FOUNDATION _14JAN2026_REV0.DWG

LAST UPDATE : 2026-01-14

GENERAL NOTES:

1. FOUNDATION DESIGN HAS BEEN DEVELOPED IN ACCORDANCE WITH GENERALLY ACCEPTED PROFESSIONAL ENGINEERING PRINCIPLES AND PRACTICES WITHIN THE LIMITS OF THE SUBSURFACE DATA PROVIDED. FOUNDATION DESIGN MODIFICATIONS MAY BE REQUIRED IN THE EVENT THE FOLLOWING DESIGN PARAMETERS ARE NOT APPLICABLE FOR THE SUBSURFACE CONDITIONS ENCOUNTERED.
   A) ULTIMATE SOIL BEARING PRESSURE AT 7-8 FT DEPTH = 3600 PSF.
   B) ALLOWABLE SOIL BEARING PRESSURE = 1,200 PSF.
   C) GROUND WATER TABLE IS AT OR BELOW FOUNDATION DEPTH.
   D) MAXIMUM FROST PENETRATION DEPTH LESS THAN FOUNDATION DEPTH.

2. WORK SHALL BE IN ACCORDANCE WITH LOCAL CODES, SAFETY REGULATIONS AND UNLESS OTHERWISE NOTED, THE LATEST REVISION OF ACI 318, "BUILDING CODE REQUIREMENTS FOR REINFORCED CONCRETE". PROCEDURES FOR THE PROTECTION OF EXCAVATIONS, EXISTING CONSTRUCTION AND UTILITIES SHALL BE ESTABLISHED PRIOR TO FOUNDATION INSTALLATION.

3. CONCRETE MATERIALS SHALL CONFORM TO THE APPROPRIATE STATE REQUIREMENTS FOR EXPOSED STRUCTURAL CONCRETE.

4. PROPORTIONS OF CONCRETE MATERIALS SHALL BE SUITABLE FOR THE INSTALLATION METHOD UTILIZED AND SHALL RESULT IN DURABLE CONCRETE FOR RESISTANCE TO LOCAL ANTICIPATED AGGRESSIVE ACTIONS. THE DURABILITY REQUIREMENTS OF ACI 318 CHAPTER 4 SHALL BE SATISFIED BASED ON THE CONDITIONS EXPECTED AT THE SITE. AS A MINIMUM, CONCRETE SHALL DEVELOP A MINIMUM COMPRESSIVE STRENGTH OF 4,500 PSI IN 28 DAYS.

5. MAXIMUM SIZE OF AGGREGATE SHALL NOT EXCEED SIZE SUITABLE FOR INSTALLATION METHOD UTILIZED OR 1/3 CLEAR DISTANCE BEHIND OR BETWEEN REINFORCING. MAXIMUM SIZE MAY BE INCREASED TO 2/3 CLEAR DISTANCE PROVIDED WORKABILITY AND METHODS OF CONSOLIDATION SUCH AS VIBRATING WILL PREVENT HONEYCOMBS OR VOIDS.

6. REINFORCEMENT SHALL BE DEFORMED AND CONFORM TO THE REQUIREMENTS OF ASTM A615 GRADE 60 UNLESS OTHERWISE NOTED. SPLICES IN REINFORCEMENT SHALL NOT BE ALLOWED UNLESS OTHERWISE INDICATED.

7. WELDING IS PROHIBITED ON REINFORCING STEEL AND EMBEDMENTS.

8. MINIMUM CONCRETE COVER FOR REINFORCEMENT SHALL BE 3 INCHES (76mm) UNLESS OTHERWISE NOTED. APPROVED SPACERS SHALL BE USED TO INSURE A 3 INCH (76mm) MINIMUM COVER ON REINFORCEMENT.

9. CONCRETE COVER FROM TOP OF FOUNDATION TO ENDS OF VERTICAL REINFORCEMENT SHALL NOT EXCEED 3 INCHES (76Mmm) NOR BE LESS THAN 2 INCHES (51mm).

10. FOUNDATION DESIGN ASSUMES STRUCTURAL BACKFILL TO BE COMPACTED IN 8 INCH (200mm) MAXIMUM LAYERS TO 95% OF MAXIMUM DRY DENSITY AT OPTIMUM MOISTURE CONTENT IN ACCORDANCE WITH ASTM D698. ADDITIONALLY, STRUCTURAL BACKFILL MUST HAVE A MINIMUM COMPACTED UNIT WEIGHT OF 110 POUNDS PER CUBIC FOOT (17 kN/m3). FOUNDATION DESIGN HAS BEEN BASED ON GEOTECHNICAL REPORT NO. 112139-001 DATED 11/JULY/2024 BY SHANNON & WILSON

11. FOUNDATION DEPTH INDICATED IS BASED ON THE GRADE LINE DESCRIBED IN THE REFERENCED GEOTECHNICAL REPORT. FOUNDATION MODIFICATION MAY BE REQUIRED IN THE EVENT CUT OR FILL OPERATIONS HAVE TAKEN PLACE SUBSEQUENT TO THE GEOTECHNICAL INVESTIGATION.

12. FOUNDATION DESIGN ASSUMES THE RECOMMENDATIONS IN THE REFERENCED GEOTECHNICAL REPORT CONCERNING VERIFICATION OF SUBSURFACE CONDITIONS ARE IMPLEMENTED PRIOR TO PLACEMENT OF CONCRETE.

13. FOUNDATION INSTALLATION SHALL BE SUPERVISED BY PERSONNEL KNOWLEDGEABLE AND EXPERIENCED WITH THE PROPOSED FOUNDATION TYPE. CONSTRUCTION SHALL BE IN ACCORDANCE WITH GENERALLY ACCEPTED INSTALLATION PRACTICES.

14. FOUNDATION DESIGN ASSUMES INSTALLATION PROCEDURES WILL INCORPORATE THE PROCEDURES RECOMMENDED IN THE REFERENCED GEOTECHNICAL REPORT.

15. FOUNDATION DESIGN ASSUMES FIELD INSPECTIONS WILL BE PERFORMED TO VERIFY THAT CONSTRUCTION MATERIALS, INSTALLATION METHODS AND ASSUMED DESIGN PARAMETERS ARE ACCEPTABLE BASED ON CONDITIONS EXISTING AT THE SITE.

16. LOOSE MATERIAL SHALL BE REMOVED FROM THE BOTTOM OF EXCAVATION PRIOR TO CONCRETE PLACEMENT. SIDES OF EXCAVATION SHALL BE ROUGH AND FREE OF LOOSE CUTTINGS.

17. CONCRETE SHALL BE PLACED IN A MANNER THAT WILL PREVENT SEGREGATION OF CONCRETE MATERIALS, INFILTRATION OF WATER OR SOIL AND OTHER OCCURRENCES WHICH MAY DECREASE THE STRENGTH OR DURABILITY OF THE FOUNDATION.

18. CONCRETE PREFERABLY SHALL BE PLACED AGAINST UNDISTURBED SOIL. WHEN FORMS ARE NECESSARY, THEY SHALL BE REMOVED PRIOR TO PLACING STRUCTURAL BACKFILL

19. CONSTRUCTION JOINTS, IF REQUIRED AT THE BASE OF THE PIERS, MUST BE INTENTIONALLY ROUGHENED TO A FULL AMPLITUDE OF 1/4 INCH (6mm). FOUNDATION DESIGN ASSUMES NO OTHER CONSTRUCTION JOINTS.

20. TOP OF FOUNDATION OUTSIDE LIMITS OF ANCHOR BOLTS SHALL BE SLOPED TO DRAIN WITH A FLOATED FINISH. AREA INSIDE LIMITS OF ANCHOR BOLTS SHALL BE LEVEL WITH A SCRATCHED FINISH.

21. EXPOSED EDGES OF CONCRETE SHALL BE CHAMFERED 1" x 1".

22. SPACERS SHALL BE ATTACHED INTERMITTENTLY THROUGHOUT THE ENTIRE LENGTH OF VERTICAL REINFORCING CAGES TO INSURE CONCENTRIC PLACEMENT OF CAGES IN EXCAVATIONS.

23. FOUNDATION DEPTH INDICATED IS BASED ON THE GRADE LINE DESCRIBED IN THE REFERENCED GEOTECHNICAL REPORT. FOUNDATION MODIFICATION MAY BE REQUIRED IN THE EVENT CUT OR FILL OPERATIONS HAVE TAKEN PLACE SUBSEQUENT TO THE GEOTECHNICAL INVESTIGATION.

24. FOR FOUNDATION INSTALLATION TOLERANCES SEE STRUCTURE ASSEMBLY DRAWING.

25. FREE FALL CONCRETE MAY BE USED PROVIDED FALL IS VERTICAL DOWN WITHOUT HITTING SIDES OF EXCAVATION, FORMWORK, REINFORCING BARS, FORM TIES, CAGE BRACING OR OTHER OBSTRUCTIONS. UNDER NO CIRCUMSTANCES SHALL CONCRETE FALL THROUGH WATER.

26. FOUNDATION DESIGN ASSUMES CASING, IF USED, WILL NOT BE LEFT IN PLACE. EQUIPMENT, PROCEDURES, AND PROPORTIONS OF MATERIALS SHALL INSURE CONCRETE WILL NOT BE ADVERSELY DISTURBED UPON CASING REMOVAL.

27. DRILLING FLUID, IF USED, SHALL BE FULLY DISPLACED BY CONCRETE AND SHALL NOT BE DETRIMENTAL TO CONCRETE OR SURROUNDING SOIL. CONTAMINATED CONCRETE SHALL BE REMOVED FROM TOP OF FOUNDATION AND REPLACED WITH FRESH CONCRETE.

TELETEK STRUCTURES	3419	0	ISSUED FOR CONSTRUCTION	2026-01-14	JK	AK
PREPARED BY.	FILE No.	REV.	DESCRIPTION	DATE	DWN BY	CHK BY

TowerCo
5000 VALLEYSTONE DRIVE
CARY, NC 27519
(919) 653-5708

SITE : **CK LAKE VALLEY**

CODE : **KY0118 [ENGTEL-1706]**

DRAWING TITLE :

PROJECT NOTES

SCALE :	NONE
DATE :	2026-01-14
DRAWN BY :	JK
APPROVED BY :	SH
FILE No :	3419
DRAWING No :	**KY0118-N1**

BILL OF MATERIAL - GLOBAL PAD & PIER

MARK NO.	DESCRIPTION	SIZE	QTY
–	4500 PSI MIX	100.8 CY	1
VERT–01	VERTICAL BAR	#9 ASTM A615–60 x 7'–5"	54
TIE–01	TIE	#4 ASTM A615–60 x 12'–0"	39
HORIZ–01	HORIZONTAL REBAR – U SHAPE TOP OF PIER	#3 ASTM A615–60 x 4'–2"	24
HORIZ–02	HORIZONTAL REBAR – STRAIGHT PAD	#9 ASTM A615–60 x 35'–6"	144

APPLICABLE CODES AND STANDARDS:

ANSI/TIA–222–G STRUCTURAL STANDARDS FOR ANTENNA SUPPORTING STRUCTURES AND ANTENNAS.
2015 INTERNATIONAL BUILDING CODE
2018 KENTUCKY BUILDING CODE
ACI 318 : AMERICAN CONCRETE INSTITUTE, BUILDING CODE REQUIREMENTS FOR STRUCTURAL CONCRETE, 318–14.
CRSI: CONCRETE REINFORCING STEEL INSTITUTE, MANUAL OF STANDARD PRACTICE, LATEST EDITION.
AISC: AMERICAN INSTITUTE OF STEEL CONSTRUCTION, MANUAL OF STEEL CONSTRUCTION, 13TH EDITION.
AWS: AMERICAN WELDING SOCIETY D1.1, STRUCTURAL WELDING CODE, LATEST EDITION.

PREPARED BY.	FILE No.	REV.	DESCRIPTION	DATE	DWN BY	CHK BY
TELETEK STRUCTURES	3419	0	ISSUED FOR CONSTRUCTION	2026-01-14	JK	AK

TowerCo
5000 VALLEYSTONE DRIVE
CARY, NC 27519
(919) 653-5708

SITE : **CK LAKE VALLEY**

CODE : **KY0118 [ENGTEL-1706]**

DRAWING TITLE :
BILL OF MATERIALS

SCALE :	NONE
DATE :	2026-01-14
DRAWN BY :	JK
APPROVED BY :	SH
FILE No :	3419
DRAWING No :	**KY0118-B1**

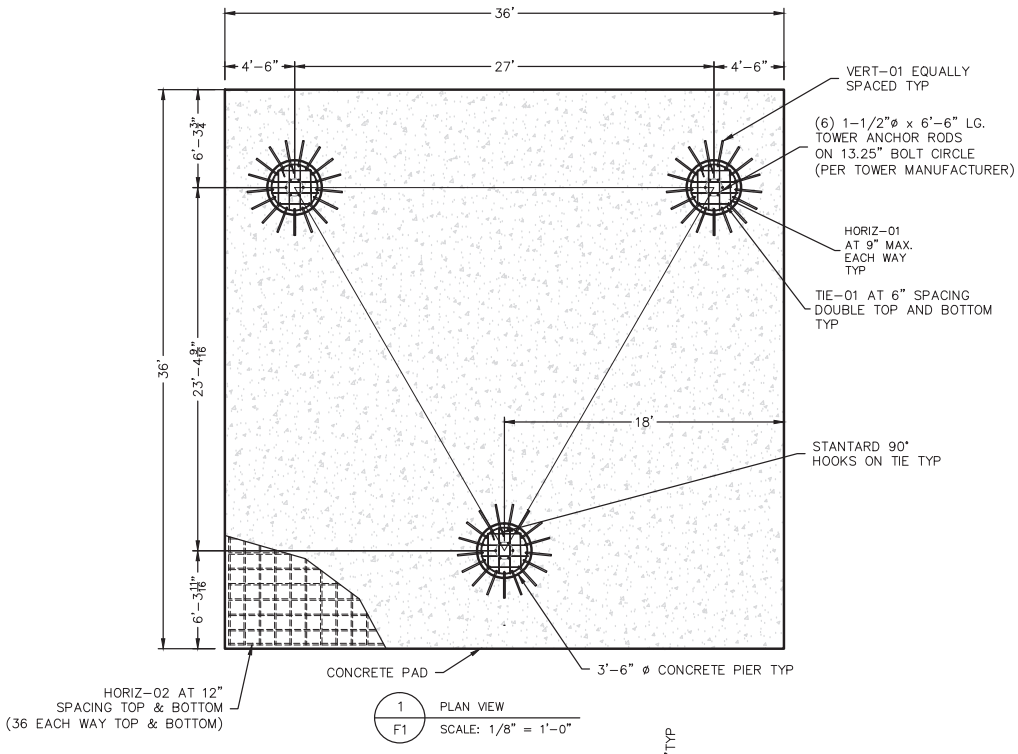

1 / F1 PLAN VIEW
SCALE: 1/8" = 1'-0"

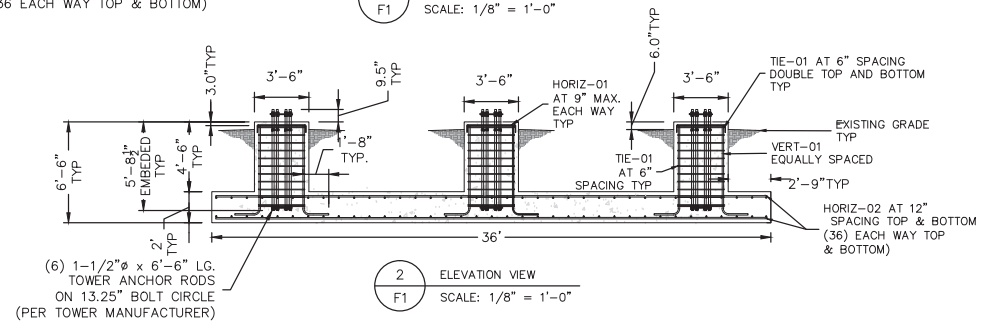

2 / F1 ELEVATION VIEW
SCALE: 1/8" = 1'-0"

DESIGN NOTES:

TOWER DESIGN DRAWINGS BY SABRE GROUP DATED DECEMBER 23, 2025, JOB # 26-2603-JDS WITH DESIGN CRITERIA:

A. TOWER DESIGN CONFIRMS TO ANSI/TIA-222-G
B. BASIC WIND SPEED (NO ICE): 115 MPH PER ASCE 7-10
C. BASIC WIND SPEED (w/ICE): 30 MPH
D. DESIGN ICE THICKNESS: 0.75 INCH PER ASCE 7-10
E. RISK CATEGORY II
F. EXPOSURE CATEGORY C
G. TOPOGRAPHIC CATEGORY 1

GLOBAL MOMENT, M: 10718 ft-kips	COMPRESSION PER LEG, P: 488 kips
GLOBAL AXIAL, P: 213.39 kips	UPLIFT PER LEG, U: 418 kips
GLOBAL SHEAR, V: 70.47 kips	SHEAR PER LEG, V: 43.64 kips

FOUNDATION NOTES:

FOUNDATION DESIGN HAS BEEN BASED ON GEOTECHNICAL REPORT NO. 25140993 DATED 31/OCTOBER/2025 BY ENGINEERED TOWER SOLUTIONS

1. CONCRETE SHALL HAVE A MINIMUM 28-DAY COMPRESSIVE STRENGTH OF 4,500 PSI.
2. REBAR SHALL CONFORM TO ASTM SPECIFICATION A615.
3. ALL REBAR SHALL HAVE 3 INCHES MINIMUM COVER.
4. AGGREGATE: ASTM C33, 3/4 INCH MAX
5. CEMENT: ASTM C150 TYPE I
6. WATER: CLEAR, POTABLE
7. AIR ENTRAINMENT: ASTM C260, 6%
8. ALL EXPOSED CONCRETE CORNERS SHALL BE CHAMFERED 1 INCH.
9. SEE GEOTECHNICAL REPORT FOR INSTALLATION REQUIREMENTS.

SITE PREPARATION NOTES:

1. THE LIMITS OF THE EXCAVATION SHOULD INCLUDE THE ENTIRE FOUNDATION FOOTPRINT AND EXTEND LATERALLY AT LEAST 4 FEET BEYOND THE OUTSIDE EDGES OF THE FOUNDATION.
2. THE BASE OF THE EXCAVATION SHOULD BE FREE OF ALL ORGANICS AND WOOD DEBRIS.
3. EXCAVATION SLOPES WILL BE NO STEEPER THAN 3 HORIZONTAL TO 1 VERTICAL (3H:1V).
4. EXCAVATED MATERIAL MAY BE USED TO BACKFILL ABOVE THE STRUCTURAL FILL, OUTSIDE OF THE BEARING ZONES. THE FILL SHOULD NOT CONTAIN TOPSOIL, ORGANICS OR DELETERIOUS MATTER. MAXIMUM LOOSE LIFTS SHOULD NOT EXCEED 8 INCHES.
5. GRADE TO BE RAISED AS SHOWN IN DRAWING. FINAL GRADE TO HAVE A 2% SLOPE AWAY FROM CENTER OF FOUNDATION ON ALL SIDES OVER THE PAD. GRADE CAN BE INCREASE TO 8% OUTSIDE OF THE FOUNDATION AREA.
6. MATERIAL TO BE COMPACTED TO 90% MAXIMUM DRY DENSITY OVTAINED FROM ASTM D1557.

TOWER CENTROID OFFSET FROM FOUNDATION CENTER

TELETEK STRUCTURES	3419	0	ISSUED FOR CONSTRUCTION	2026-01-14	JK	AK
PREPARED BY.	FILE No.	REV.	DESCRIPTION	DATE	DWN BY	CHK BY

TowerCo
5000 VALLEYSTONE DRIVE
CARY, NC 27519
(919) 653-5708

TELETEK STRUCTURES

SITE : CK LAKE VALLEY
CODE : KY0118 [ENGTEL-1706]
DRAWING TITLE :
FOUNDATION INSTALLATION DETAILS

SCALE :	AS SHOWN
DATE :	2026-01-14
DRAWN BY :	JK
APPROVED BY :	SH
FILE No :	3419
DRAWING No :	KY0118-F1

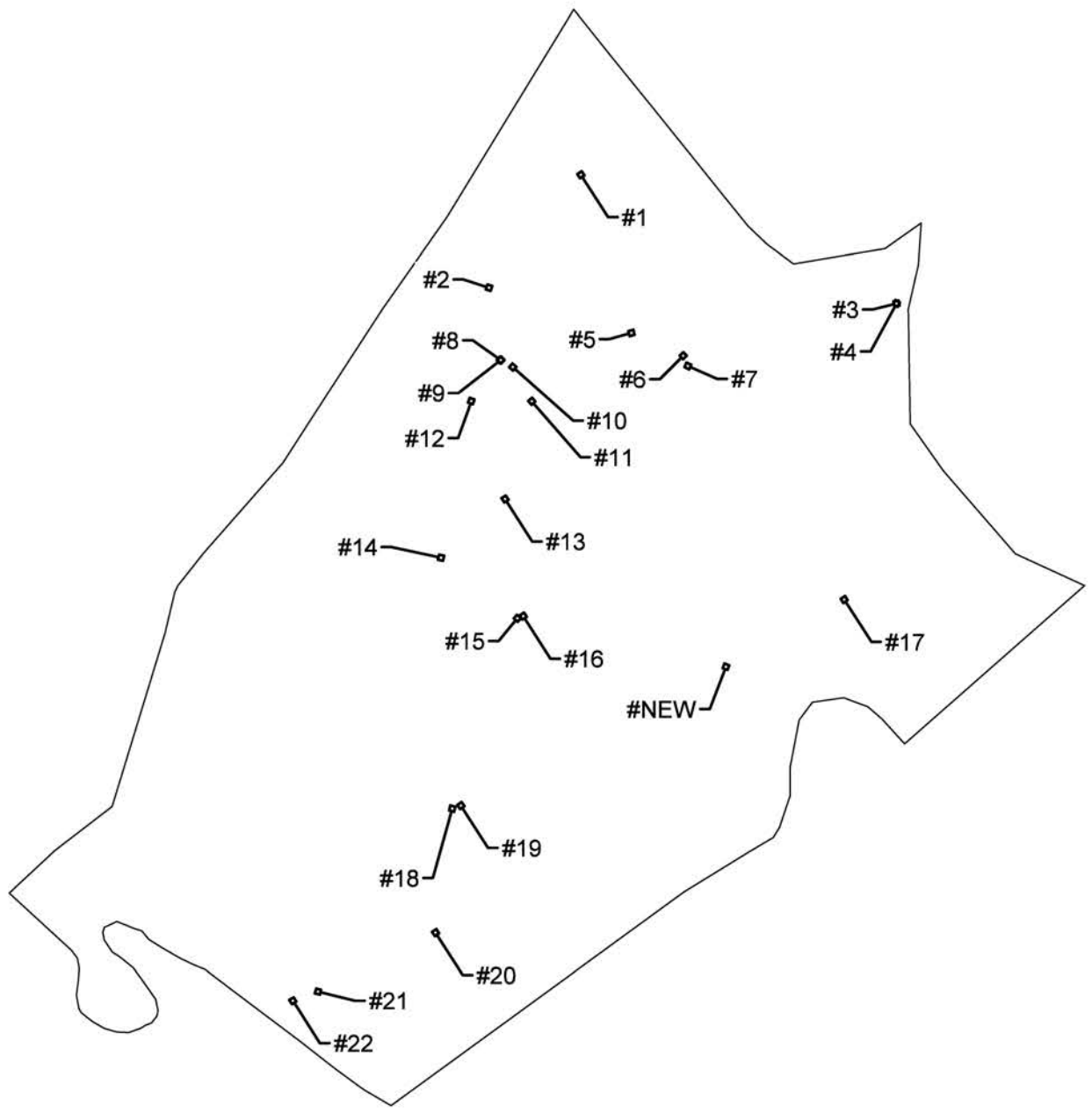

RUSSELL COUNTY

FCC REGISTERED TOWERS

TOWER	TOWER OWNER	ASR	LATITUDE	LONGITUDE
1	CELLCO PARTNERSHIP	1257754	37° 7'44.70"N	85° 2'39.70"W
2	HAMMOND BROADCASTING INC	1065125	37° 5'39.00"N	85° 4'49.00"W
3	UNITI TOWERS LLC	1318405	37° 5'25.30"N	84°54'43.80"W
4	SBA INFRASTRUCTURES, LLC	1232264	37° 5'19.70"N	84°54'47.30"W
5	CTI ASSETS II, LLC	1309775	37° 4'40.80"N	85° 1'23.50"W
6	SBA TOWERS VII, LLC	1257488	37° 4'19.50"N	84°59'59.40"W
7	TILLMAN INFRASTRUCTURE, LLC	1321407	37° 4'6.80"N	84°59'55.80"W
8	UNITI TOWERS LLC	1316896	37° 4'7.30"N	85° 4'37.40"W
9	HARMONI TOWERS LLC	1319987	37° 4'7.30"N	85° 4'37.40"W
10	SBA INFRASTRUCTURES, LLC	1232919	37° 3'51.90"N	85° 4'19.50"W
11	GLOBAL TOWER, LLC. THROUGH AMERICAN TOWERS, LLC	1013822	37° 3'21.00"N	85° 3'45.00"W
12	DUO COUNTY TELEPHONE COOPERATIVE CORPORATION, INC.	1060800	37° 3'15.40"N	85° 5'14.80"W
13	HOOVER, MAE DBA = LAKE CUMBERLAND BROADCASTERS	1043881	37° 1'31.00"N	85° 4'23.00"W
14	RUSSELL COUNTY AIRPORT	1272430	37° 0'20.00"N	85° 5'59.00"W
15	SBA INFRASTRUCTURES, LLC	1249806	36°59'14.90"N	85° 4'3.00"W
16	UNITI TOWERS LLC	1316461	36°59'15.30"N	85° 4'2.00"W
17	CELLCO PARTNERSHIP	1259175	36°59'34.10"N	84°56'3.70"W
18	SBA TOWERS III LLC	1261129	36°55'30.60"N	85° 5'33.60"W
19	TILLMAN INFRASTRUCTURE, LLC	1321265	36°55'26.20"N	85° 5'37.90"W
20	CELLCO PARTNERSHIP	1254846	36°53'3.20"N	85° 6'5.40"W
21	US ARMY CORPS OF ENGINEERS	1289489	36°51'48.80"N	85° 8'57.50"W
22	SBA TOWERS III LLC	1261117	36°51'35.70"N	85° 9'37.10"W
NEW	TOWERCO VI, LLC	TBD	36° 58' 16.42"N	84° 58' 53.50"W

PREPARED FOR:

TowerCo®

5000 VALLEYSTONE DR #200
CARY, NC 27519

PREPARED BY:

TeleCAD Wireless

1961 NORTHPOINT BLVD, SUITE 130
HIXSON, TN 37343
PH: 423-843-9500
FAX: 423-843-9509

DRAWN BY:	JAE
CHECKED BY:	DS

REVISIONS

NO.	DATE	BY	DESCRIPTION
B	08/11/25	JAE	PRELIMINARY REVIEW
A	07/29/25	JAE	PRELIMINARY REVIEW

ENGINEER'S STAMP:

NOT VALID WITHOUT P.E. STAMP & SIGNATURE

SITE NAME: CK LAKE VALLEY

ADDRESS: HIGHWAY 1611
RUSSELL SPRINGS, KY 42642

COUNTY: RUSSELL

LATITUDE: 36° 58' 16.42" N

LONGITUDE: 84° 58' 53.50" W

SITE NUMBER: KY0118

SHEET TITLE: OVERALL SITE PLAN

DRAWING NO.	REVISION:
ASR	B

Privacy Act Statement (5 U.S.C. § 552a(e)(3)): Authority: Information solicited by the Federal Aviation Administration (FAA) Obstruction Evaluation/Airport Airspace Analysis (OE/AAA) is authorized by 49 U.S.C. § 44718 and 47101 Purpose: The FAA OE/AAA is an application used to evaluate all structures that may affect the national airspace system and defend against potential hazards to the safety and efficient use of the navigable airspace. The information collected is used to allow a user access to the OE/AAA and to administer the Aeronautical Study Process. Routine Uses: In accordance with the Privacy Act system of records notice, DOT/ALL 16 Mailing Management System and DOT/FAA 826 Petitions for Exemptions, Other than Medical Exemptions this information may be disclosed to officials within the federal government and the public in general. DOT/ALL 13 - Internet/Intranet Activity and Access Records, this information is routinely used; • To provide information to any person(s) authorized to assist in an approved investigation of improper access or usage of DOT computer systems; • To an actual or potential party or his or her authorized representative for the purpose of negotiation or discussion of such matters as settlement of the case or matter, or informal discovery proceedings; • To contractors, grantees, experts, consultants, detailees, and other non-DOT employees performing or working on a contract, service, grant cooperative agreement, or other assignment from the Federal government, when necessary to accomplish an agency function related to this system of records; and • To other government agencies where required by law.

Disclosure: Submission of the information is voluntary, however, failure to submit requested information will result in FAA's inability to grant you access to the system and may result in an inability of the FAA to process the notice or administer the aeronautical study process for the construction, alteration, activation, or deactivation proposed.

U.S. Department of Transportation
Federal Aviation Administration

Failure to Provide All Requested Information May Delay Processing of your Notice

Notice of Proposed Construction or Alteration

FOR FAA USE ONLY

Aeronautical Study Number
2025-ASO-15385-OE

Status: Determined - No Hazard

1.Sponsor

Name:	TowerCo 2013 LLC
Attn of:	Henry Byrne
Address:	5000 Valley Stone Drive Suite 200
City:	Cary
State:	NC
Zip:	27519
Country:	US
Phone:	+1-919-653-5753
Fax:	

2.Sponsor's Representative

Name:	Wireless Applications Corporation
Attn of:	Wireless Applications Corporation
Address:	111 108th Ave NE, Suite 160
City:	Bellevue
State:	WA
Zip:	98004
Country:	US
Phone:	+1-1-425-643-5000;ext=null
Fax:	

3.Notice of:	New Construction

4.Duration:

Permanent (Months:0 Days:0)

5.Work Schedule:

6.Type:	Antenna Tower
7.Marking/Lighting:	Dual-red and medium intensity

8.FCC Antenna Registration Number:
(if applicable)

9.Latitude:	36°58' 16.42" N
10.Longitude:	84°58' 53.50" W

12.Nearest

State:	KY
County:	Russell

13.Nearest Public Use Airport: *(or Military Airport/Heliport)*	0KY
14.Distance from Airport to Structure:	22691 ft
15.Direction from Airport to Structure:	57°
16.Site Elevation *(SE)*:	955 ft
17.Structure Height *(AGL)*:	260 ft
18.Overall Height *(AMSL)*:	1215 ft

19.Prior ASN *(if applicable)*:

20.Description of Location:

Highway 1611

21.Description of Proposal:

Proposed site is a 260 ft AGL SSL tower, including all top-mounted appurtenances.

Frequencies:

Low Freq	High Freq	Unit	EIRP
6	7	GHz	42 dBW
6	7	GHz	55 dBW
10	11.7	GHz	42 dBW
10	11.7	GHz	55 dBW
17.7	19.7	GHz	42 dBW
17.7	19.7	GHz	55 dBW
21.2	23.6	GHz	42 dBW
21.2	23.6	GHz	55 dBW
614	698	MHz	1000 W
614	698	MHz	2000 W
698	806	MHz	1000 W
806	824	MHz	500 W
806	901	MHz	500 W
824	849	MHz	500 W
851	866	MHz	500 W
869	894	MHz	500 W
896	901	MHz	500 W
901	902	MHz	7 W
929	932	MHz	3500 W
930	931	MHz	3500 W
931	932	MHz	3500 W
932	932.5	MHz	17 dBW
935	940	MHz	1000 W
940	941	MHz	3500 W
1670	1675	MHz	500 W
1710	1755	MHz	500 W
1850	1910	MHz	1640 W
1850	1990	MHz	1640 W
1930	1990	MHz	1640 W
1990	2025	MHz	500 W
2110	2200	MHz	500 W
2305	2360	MHz	2000 W
2305	2310	MHz	2000 W
2345	2360	MHz	2000 W
2496	2690	MHz	500 W
3700	3980	MHz	3280 W

Letters:

22/10/2025 - DET

TEAM KENTUCKY TRANSPORTATION CABINET

KENTUCKY TRANSPORTATION CABINET

TC 55-2
Rev. 04/2025

KENTUCKY AIRPORT ZONING COMMISSION

APPLICATION for PERMIT to CONSTRUCT or ALTER a STRUCTURE

Permanent and Long Term Temporary Structures (more than 120 days)

APPLICANT (*name*) TowerCo V Holding LLC	**Email** hbyrne@towerco.com	**Phone** 919-653-5700	
ADDRESS (street) 5000 Valley Stone Drive	**CITY** Cary	**STATE** NC	**ZIP** 27519
APPLICANT'S REPRESENTATIVE (*name*)	**Email**	Phone	
ADDRESS (*street*)	**CITY**	**STATE**	**ZIP**
APPLICATION FOR ☒ New Construction ☐ Alteration ☐ Existing **DURATION** ☐ Permanent ☐ Temporary (*months days*)		**WORK SCHEDULE (start & end date)** Start 5/1/26 to End 6/30/26	
TYPE ☐ Crane ☐ Building ☒ Antenna ☐ Tower ☐ Water Tank ☐ Power Line ☐ Other	**MARKING/PAINTING/LIGHTING PREFERRED** ☐ Red Lights & Paint ☐ White- medium intensity ☒ Dual- red & medium intensity white ☐ Dual- red & high intensity white ☐ Other		
LATITUDE 36°58'16.42"	**LONGITUDE** 84°58'53.50"	**DATUM** ☒ NAD83 ☐ NAD27 ☐ Other	
NEAREST City Russell Springs	**NEAREST KENTUCKY PUBLIC USE or MILITARY AIRPORT** Philip Billard Airport (TOP)		
SITE ELEVATION (SE, *feet*) 955	**TOTAL STRUCTURE HEIGHT** (AGL, *feet*) 260	**FAA Aeronautical Study #** (Study is not required to be completed by the FAA prior to submit this application) 2025-ASO-15385-OE	
OVERALL HEIGHT (*site elevation plus total structure height, AMSL, feet*) 1215			

DISTANCE (*from nearest Kentucky public use or Military airport to structure, feet*) 9.39 nm

DIRECTION (*from nearest Kentucky public use or Military airport to structure*)

DESCRIPTION OF LOCATION (or attach a marked drawing, Google map, or any certified survey)
Proposed Self-support tower located near 63 Polston Town Rd, Russell county, Russell Springs, KY 42642

DESCRIPTION OF PROPOSAL (basic explanation of the work to be completed)

Proposed 260 ft AGL tower for communications purposes

CERTIFICATION (*I hereby certify that all the above entries, made by me, are true, complete, and correct to the best of my knowledge and belief.*)

PENALITIES (*Persons failing to comply with KRS 183.861 to 183.990 and 602 KAR 050 are liable for fines and/or imprisonment as set forth in KRS 183.990(3). Noncompliance with FAA regulations may result in further penalties.*)

NAME	**TITLE**	**SIGNATURE**	**DATE**
Henry Byrne	Compliance/ Regulatory Mager	[signature]	1/15/26

GEOTECHNICAL REPORT OF SUBSURFACE INVESTIGATION

October 31, 2025

PROPOSED SELF SUPPORT TOWER
CK LAKE VALLEY
(KY0118)

Highway 1611
Russell Springs, KY 42642

36.971228, -84.981528

Prepared for:

TowerCo
EMPOWERING connectivity

Prepared by:

ENGINEERED
TOWER SOLUTIONS

STATE OF KENTUCKY
RAPHAEL MOHAMED
24429
LICENSED
PROFESSIONAL ENGINEER

Raphael Mohamed

Tyler Schueller
Geotechnical Engineer I

Raphael Mohamed, P.E.
Registered KY 24429

Reviewed by: Jorge Varela, P.E.
Senior Geotechnical Engineer

Engineered Tower Solutions, PLLC - 3227 Wellington Court - Raleigh, NC 27615
(919) 782-2710

Project Summary

Item	Description
Project Description	A geotechnical exploration and report have been prepared for this proposed 255-foot self-supported tower with 5-foot lighting arrestor. Included in this report are the results of the field exploration and the recommendations for the design of the foundation system.
Site Coordinates	Latitude: 36.971228 Longitude: -84.981528
Site Condition	The proposed tower will be installed at Highway 1611 in Russell Springs, Kentucky
Frost Depth	Based on the TIA Standard (TIA-222-H), dated October 2017, the recommended design frost penetration depth to be used for Russell County, KY is 30 inches (2.5 ft).
Groundwater	Groundwater was not encountered at the time of drilling. Please note that subsurface water levels will fluctuate with seasonal and cyclical temperatures and precipitation and can be higher or lower at other times.
Proposed Foundation	We assume the proposed foundation will be supported with either pad and pier or drilled shaft (caisson).

Field Exploration

Item	Description
Date	October 28th, 2025
Number of Borings	1
Location	Latitude: 36.971228 Longitude: -84.981528
Equipment Used	CME 75
Advancement Method	Hollow Stem Auger (HSA)
Sampling Method	ASTM D-1586 with 1.5 I.D. Split Spoon Sampler

Laboratory Classification and Testing

Standard	Description
ASTM D2488	Standard Practice for Description and Identification of Soils

Subsurface Profile

Based on the results of our borings, the soils beneath the surface can be summarized in the table below:

Material Encountered	Approximate Depth to Bottom of Stratum	Description	Consistency / Density
SAND	12	Tan and orange clayey sand	Medium Dense
CLAY	17	Orange sandy lean clay	Medium Stiff
SAND	22	Orange clayey sand	Loose
CLAY	42.3	Orange sandy fat clay	Soft to Medium Stiff

Detailed descriptions of conditions encountered at each exploration point are indicated on the individual logs in the Appendix B. Stratification boundaries on the boring logs represent the approximate location of changes in soil types; in-situ, the transition between materials may be gradual.

Groundwater was not encountered at the time of drilling. Groundwater levels will fluctuate with seasonal and climatic changes and may be different at other times.

Earthwork Recommendations – Equipment Mat

Earthwork is anticipated to include excavations and fill placement. The following sections provide recommendations for use in the preparation of the equipment mat foundation area and access drive.

Site Preparation

The subgrade should be evaluated under the direction of the Geotechnical Engineer. Areas where soft material are present or excessively wet or dry material should either be removed, or moisture conditioned and recompacted.

Fill Material Types

Soil Type	USCS Classification	Acceptable Parameters (for Structural Fill)
Imported Low- to Moderate- Plasticity Soil [2]	CL, ML, SC or SM	All locations and elevations
Sand / Gravel with greater than 12% fines	GW/GP, SW/SP	Crushed stone base course may be used for the access roadway or beneath shallow foundations as a replacement material for overexcavated soils.
Near-Surface On-site soils [2]	SC	On-site soils generally appear suitable for use as fill when they contain at least 12% fines (clay and/or silt) and are compacted at an appropriate moisture content.

1. Controlled, compacted fill should consist of approved materials that are free of organic matter and debris. A sample of each material type should be submitted to the geotechnical engineer for evaluation.
2. Low- to moderate-plasticity cohesive soil or granular soil having at least 12% fines

Fill Compaction Requirements

Item	Structural Fill	General Fill
Maximum Lift Thickness	8 inches or less in loose thickness when heavy, self-propelled compaction equipment is used	Same as Structural fill
Minimum Compaction Requirements [1, 2]	98% of max. below foundations and within 1 foot of finished pavement subgrade 95% of max. above foundations, below floor slabs, and more than 1 foot below finished pavement subgrade	92% of max.
Water Content Range [1]	Low plasticity cohesive: -2% to +3% of optimum High plasticity cohesive: 0 to +4% of optimum Granular: -3% to +3% of optimum	As required to achieve min. compaction requirements

1. Maximum density and optimum water content as determined by the standard Proctor test (ASTM D 698).
2. High plasticity cohesive fill should not be compacted to more than 100% of standard Proctor maximum dry density.

Excavations

Groundwater was not encountered at the time of drilling. Although not expected, if encountered in deep trench excavations during construction, groundwater or perched groundwater will require dewatering until backfilling operations are complete.

All excavations that may be required should, at a minimum, comply with applicable local, state and federal safety regulations, including the current OSHA Excavation and Trench Safety Standards to provide stability and safe working conditions.

Slopes

For permanent slopes in unreinforced compacted fill areas, we recommended maximum configurations of 3:1 (Horizontal: Vertical) for the cohesive soils (clay) found at the site.

If steeper slopes are required for site development, stability analyses should be completed to design the grading plan. The face of all slopes should be compacted to the minimum specification for fill embankments. Fill slopes should be overbuilt and trimmed to compacted material.

Highly Plastic Soils

Highly plastic soils were encountered in the exploration. Highly plastic soils are prone to **shrink-swell behavior** with fluctuations in moisture content which can cause distress in pavements, slabs, and foundations. Two feet of vertical separation should be created between the existing highly plastic near surface soils and final design subgrades. This can be accomplished by over-excavation and replacement, raising site grades or a combination of both. Fill or backfill used to create the recommended separation should consist of imported low to moderate plasticity soil with at least 20% fines (silt and clay).

Earthwork Construction Considerations

The near-surface, on-site soils will lose strength when exposed to moisture. To the extent practical, earthwork should be performed during drier periods of weather. Increased remedial measures due to wet and soft or otherwise unsuitable conditions should be expected if earthwork is performed during colder and wetter periods of weather.

A qualified geotechnical engineer should be retained during the earthwork phase of the project to observe earthwork and to perform necessary tests and observations during subgrade preparation; to monitor proof-rolling, placement and compaction of controlled compacted fills, and backfilling of excavations to the completed subgrade.

Foundations Recommendations

The following recommendations are made based on our review of the test boring data and our past experience with similar projects and subsurface conditions. Ultimate soil strength parameters are presented on table below.

Ultimate Strength Parameters

Boring #	Depth (ft)	Unified Soil Classification	Total Unit Weight (pcf)	Friction Angle (degrees)	Cohesion (psf)
B-1	0.0 – 3.0	SC	120	30	--
	3.0 – 5.0	SC	120	30	--
	5.0 – 8.0	SC	120	30	--
	8.0 – 12.0	SC	115	30	--
	12.0 – 17.0	CL	105	--	700
	17.0 – 22.0	SC	105	29	--
	22.0 – 27.0	CH	100	--	400
	27.0 – 32.0	CH	105	--	500
	32.0 – 42.3	CH	100	--	300

1. Groundwater was not encountered at the time of drilling.

Based on the subsurface conditions and typical design foundation loads for similar self-support towers, we recommend that either a caisson (drilled shaft) or a pad/pier be used to support the new tower.

Modulus of Subgrade Reaction

A vertical and horizontal modulus of subgrade reaction may be derived using the following equations and soils parameters expressed in the above table:

$$k_{s\text{-}v} = 12 \cdot SF \cdot q_a$$

$$k_{s\text{-}h} = k_{s\text{-}v} \cdot B$$

Where:

q_a = Allowable Bearing Capacity (ksf)
SF = Safety Factor
B = Base width (ft), use 1 if B< 1ft
$k_{s-\upsilon}$ =Vertical Modulus of Subgrade Reaction (kcf)
k_{s-h} = Horizontal Modulus of Subgrade Reaction (ksf)

Caisson (Drilled Shaft)

Should caissons (drilled shafts) be used, the caissons (drilled shafts) will achieve compressive (downward) and tensile (uplift) resistance through skin friction along the sides of the shafts. In addition to skin friction, bearing resistance at the caisson's tip will contribute to compressive capacity. We recommend the values given the table below be used for this project. Please note the tip bearing capacity and skin frictions are net ultimate and ultimate values respectively. Appropriate factors of safety or resistance factors should be used. Lateral loads can be resisted by the lateral stiffness of the soil. Parameters for analysis of the laterally loaded caisson are also given the table below.

Caisson (Drilled Shaft) Parameters

Depth (ft)	Net Ultimate Tip Bearing Capacity (ksf)	Ultimate Skin Friction[1] (ksf)		Lateral Modulus (pci)	ε_{50} (in/in)
		Compressive	Uplift		
0.0 – 3.0	--	--	--	--	--
3.0 – 5.0	--	0.2	0.2	90	--
5.0 – 8.0	--	0.3	0.3	90	--
8.0 – 12.0	--	0.5	0.5	90	--
12.0 – 17.0	6	0.4	0.4	100	0.01
17.0 – 22.0	10	0.8	0.8	25	--
22.0 – 27.0	4	0.2	0.2	100	0.01
27.0 – 32.0	5	0.3	0.3	100	0.01
32.0 – 42.3	3	0.2	0.2	30	0.02

1. We recommend the skin friction be ignored for the top 3 ft of the caisson

Based on the subsurface soil conditions, excavations for the caissons (drilled shafts) should be possible using a large, truck-mounted, hydraulic-advanced drill rig. All debris, loose or disturbed soil should be removed from the excavation prior to placing reinforced steel and/or concrete. Reinforcing steel and/or concrete should be placed immediately upon completion of the excavation.

The excavations may be susceptible to caving. Drilling fluid or casing could be used to assist in keeping the drilled hole open. If casing is used, we recommend it be removed from the excavation as concrete is being placed. Continuous vibration or other approved methods should be used during casing withdrawal to reduce the potential for void-space formation within the concrete. If water is present during concrete placement and/or drilling fluids are used to maintain hole stability, concrete should be pumped or otherwise discharged to the bottom of the hole via a hose or tremie pipe. The end of the hose or tremie pipe must remain below the top surface of any water, drilling fluid and the in-place concrete at all times. Additionally, concrete should be consolidated using vibration methods over the entire length and width of the caissons and the consolidation should be performed only after these fluids are removed and to the extent possible.

Pad & Pier / Single Mat Foundation

If the site has been prepared in accordance with the requirements noted in *Earthwork Recommendations – Equipment Mat,* the tower's foundation capacity can be determined using the soil's bearing capacity, passive pressure resistance, and a sliding friction factor.

Net Ultimate Bearing Capacity and Sliding Friction Factor

Depth[2] (ft)	Net Ultimate Bearing Capacity[1] (psf)	Sliding Friction Factor[1]
0.0 – 3.0	--	--
3.0 – 12.0	4,500	

1. This value is a net ultimate value and an appropriate factor of safety or resistance factor should be used

Ultimate Passive Pressure and Friction Factor

Boring #	Depth (ft)	Ultimate Passive Pressure[1] (psf)[1]
B-1	0.0 – 2.0	0 – 600
	2.0 – 4.0	600 – 1,200
	4.0 – 8.0	1,200 – 2,400
	8.0 – 12.0	2,400 – 3,600
	12.0 – 20.0	3,600 – 5,200

1. Ultimate passive pressure can be interpolated for foundation depths with the depth ranges given

Seismic Parameters

The seismic design requirements for buildings and other structures are based on Seismic Design Category. Site Classification is required to determine the Seismic Design Category for a structure. The Site Classification is based on the upper 100 feet of the site profile defined by a weighted average value of either shear wave velocity, standard penetration resistance, or undrained shear strength in accordance with Section 20.4 of ASCE 7 and the International Building Code (IBC)

Seismic Site Classification

Item	Seismic Parameter
2018 International Building Code Seismic Site Classification	D[1]
Design Spectral Response Acceleration Parameters	$S_{ds} = 0.24g$ $S_{d1} = 0.16g$

1. The IBC seismic site classification is based on the subsurface profile depth of 100 feet. The scope of work did not authorize exploration to a depth of 100 feet. A seismic Site Soil Classification of D should be used if insufficient details are known about the 100-foot soil profile.

Field Electrical Resistivity Survey

An electrical resistivity survey was performed using the Wenner Four Point method (ASTM G57).. For each array, four copper-clad electrodes were inserted approximately 6 to 12 inches into the ground and one measurement was recorded at each A-spacing interval of 2, 4, 6, 8, 16 & 32 feet. Soil electrical resistivity testing results are summarized in the table below and may assist with the design of electrical grounding components and corrosion protection.

Apparent resistivity ρ is calculated as: $$\rho = \frac{4\pi a R}{1 + \frac{2a}{\sqrt{a^2 + 4b^2}} - \frac{a}{\sqrt{a^2 + b^2}}}$$

Electrode Spacing a		Electrode Depth b		N-S Test		E-W Test	
[feet]	[centimeters]	[inches]	[centimeters]	Measured Resistance R	Apparent Resistivity ρ	Measured Resistance R	Apparent Resistivity ρ
				Ω	[Ω-cm]	Ω	[Ω-cm]
2	61	6	15	119.70	50,320	120.90	50,820
4	122	6	15	66.30	52,140	68.00	53,470
6	183	6	15	45.70	53,160	42.50	49,440
8	244	12	30	32.90	51,740	30.00	47,180
16	488	12	30	10.78	33,270	10.54	32,530
32	975	12	30	3.95	24,240	3.67	22,520

LIMITATIONS OF REPORT

This report has been prepared in accordance with generally accepted geotechnical engineering practices for the specific application of this project. The conclusions in this report are based on the applicable standards of our practice in this geographic area at the time this report was prepared. No other warranty, expressed or implied, is made.

The analyses and conclusions submitted herein are based, in part, upon the data obtained from the subsurface exploration performed for this analysis. The soil and ground water conditions can vary across the site. Opinions and conclusions are subject to change if new or additional information is submitted for review.

APPENDIX A
LOCATION INFORMATION

SITE LOCATION PLAN
CK LAKE VALLEY (KY0118)
Job Number: 25140993

ENGINEERED TOWER SOLUTIONS

BORING LOCATION PLAN
CK LAKE VALLEY (KY0118)
Job Number: 25140993

ENGINEERED TOWER SOLUTIONS

SITE PHOTO
CK LAKE VALLEY (KY0118)
Job Number: 25140993

APPENDIX B
SOIL TEST BORING

BORING NUMBER B1

ENGINEERED TOWER SOLUTIONS

CLIENT Tower Co.
PROJECT NUMBER 25140993
DATE 10/28/2025
DRILLING METHOD Hollow Stem Auger (HSA)
DRILLING EQUIPMENT Mobile B-51
LOGGED BY T. Schueller
NOTES

PROJECT NAME CK Lake Valley (KY0118)
PROJECT LOCATION Highway 1611, Russell Springs, KY
COORDINATES 36.971228, -84.981528
GROUND WATER LEVELS:
AT TIME OF DRILLING --- Not Encountered
AT END OF DRILLING --- Not Encountered
0hrs AFTER DRILLING --- Not Encountered

DEPTH (ft)	GRAPHIC LOG	MATERIAL DESCRIPTION	SAMPLE TYPE NUMBER	BLOW COUNTS (N VALUE)
0		CLAYEY SAND (SC), tan and orange, moist, medium dense.	SS 1	5-7-8 (15)
			SS 2	5-7-12 (19)
			SS 3	6-9-11 (20)
10			SS 4	4-4-6 (10)
		SANDY LEAN CLAY (CL), orange, moist, medium stiff.	SS 5	3-3-4 (7)
		CLAYEY SAND (SC), orange, moist, loose.		
20			SS 6	5-4-5 (9)
		SANDY FAT CLAY (CH), orange, moist, soft to medium stiff.	SS 7	0-2-2 (4)
30			SS 8	2-3-2 (5)
			SS 9	2-2-1 (3)
40			SS 10	1-2-2 (4)

Bottom of borehole at 42.3 feet.

DIRECTIONS FROM RUSSELL COUNTY COURTHOUSE

From Russell County Clerk; Leave from Lewis Aly, turn left onto S Main St / KY 92, at the round-a-bout take the second exit onto N Main St / US 127 bus N / KY 92; keep straight on at N Main St / US 127 N; follow N Main St / US 127 N; turn right onto Maple St / KY 619; turn left onto Dowell Rd; turn right onto E Steve Wariner Dr / KY 80; turn right onto Highway 910 / KY 910; bear right at S Highway 76 / KY 76; bear right at Highway 1611 / KY 1611; follow Highway 1611 / KY 1611; arrive at site on the left.

Prepared by TeleCAD Wireless | 423-843-9500

EASEMENT AGREEMENT

THIS EASEMENT AGREEMENT ("Easement") is effective as of the latter of the signature dates below ("Effective Date") by and between **DOUGLAS K. POLSTON**, single ("Grantor") and **TOWERCO VI, LLC**, a Delaware limited liability company ("Grantee").

For good and valuable consideration, the receipt and sufficiency of which is hereby acknowledged, the parties hereto agree as follows:

1. Premises. Grantor is the owner of certain real property located in Russell Springs, County of Russell, State of Kentucky, commonly known as 235 Polstontown Road, Russell Springs, KY 42642 (parcel no. 065-00-00-014.01) (the "Parent Parcel"), as more particularly described in Exhibit "A" annexed hereto. Grantor hereby grants to Grantee an easement for approximately Ten Thousand (10,000) square feet of the Parent Parcel ("Ground Space") and all access and utility easements if any ("Access and Utility Easements"), (the Ground Space and the Access and Utility Easements shall collectively be referred to as the "Premises") as described in Exhibit "B" annexed hereto.

2. Use. The Premises may be used by Grantee and Grantee's tenants and licensees for the transmission and receipt of wireless communication signals in any and all frequencies, the construction, maintenance, operation, leasing and licensing of towers, antennas, and buildings, and related facilities and activities, and for any other uses which are incidental thereto ("Intended Use"). Grantee and its tenants and licensees shall have access to the Premises twenty-four (24) hours a day, seven (7) days a week. Grantor agrees to cooperate with Grantee in obtaining, at Grantee's expense, all licenses and permits required for Grantee's use of the Premises (the "Governmental Approvals"). Grantor further agrees to cooperate with Grantee in executing and delivering any documents requested by Grantee to obtain Government Approvals necessary for its Intended Use. In the event that Grantee's Intended Use of the Premises is actually or constructively prohibited then, in addition to any other remedies available to Grantee, Grantee shall have the option to terminate this Easement with notice to Grantor.

3. Term. The term of this Easement shall be ninety-nine (99) years commencing on the date Grantee begins commercial operation of the Improvements (as defined in Paragraph 5(a)) or the fourth anniversary of the Effective Date, whichever first occurs ("Commencement Date") and terminating on the ninety-ninth (99th) anniversary of the Commencement Date (the "Term") unless otherwise provided in Paragraph 7.

4. Consideration. Grantee shall pay Grantor a one-time lump sum payment of ("Consideration"). Consideration shall be payable to Grantor at Grantor's address as specified in paragraph 16 below within thirty days after the Commencement Date. This one-time lump sum Consideration payment to Grantor shall be the consideration for rights provided by Grantor to Grantee per this Easement.

As further consideration for Grantor to enter into this Easement, Grantee shall pay to Grantor within ten (10) days of the Effective Date of this Easement, a one-time signing bonus of

5. Improvements; Utilities; Access.

(a) Grantee shall have the right, at Grantee's sole cost and expense, to erect and maintain on the Premises improvements, personal property and facilities necessary or desired for its Intended Use (collectively the "Improvements"). The Improvements shall remain the exclusive property of the Grantee throughout the term and after the termination of this Easement. Grantee may construct, alter, demolish, reconstruct, restore, replace, supplement, modify and reconfigure the Improvements at any time during the Term of this Easement.

(b) Grantee shall remove all of the above-ground portions of the Improvements not later than one hundred eighty (180) days following any termination of this Easement. Grantor grants Grantee the right to clear all trees, undergrowth, or other obstructions and to trim, cut, and keep trimmed and cut all tree limbs which may interfere with or fall upon the Improvements or Premises. Grantor grants Grantee a non-exclusive easement in, over, across and through other real property owned by Grantor as reasonably required for construction, installation, maintenance, and operation of the Improvements. In the event that a guyed tower is constructed on the Premises, Grantor also grants Grantee an easement in, over, across and through Grantor's real property during the Term of this Easement for the installation and maintenance of and reasonable access to the guy wires and guy wire anchors.

(c) Grantee shall have the right to install power, telecommunications, cables, conduit, and any other utilities, including cabinets, vaults and improvements directly related to such utilities, on the Premises, at Grantee's expense, and to improve present utilities on the Premises (including but not limited to the installation of emergency power generators). Grantee shall have the right to permanently place utilities on (or to bring utilities across or under) the Premises and the Improvements. In the event that utilities necessary to serve the equipment of Grantee or the equipment of Grantee's licensee(s) or tenant(s) cannot be located within the Premises, Grantor agrees to cooperate with Grantee and to act reasonably in allowing the location of utilities on the Parent Parcel or other real property owned by Grantor without requiring additional compensation from Grantee or Grantee's licensee(s) or tenant(s). Grantor shall, upon Grantee's request, execute within fifteen (15) days a separate written easement to the utility company providing the service or Grantee in a form which may be filed of record evidencing this right.

(d) Grantor grants to Grantee, its officers, agents, employees, tenants, licensees and their independent contractors, the right and privilege to enter upon the Premises and the Parent Parcel, to perform or cause to be performed test borings of the soil, environmental audits, engineering studies and to conduct a survey of the Premises and all or part of the Parent Parcel. Grantor grants Grantee and its tenants and licensees a license to use such portion of Grantor's property contiguous to the Premises on a temporary basis as reasonably required during the Term of this Easement for the construction, installation, maintenance or removal of the Improvements, including access for construction machinery and equipment, storage of construction materials and equipment and staging areas.

(e) Grantor represents and warrants to Grantee that Grantee shall at all times during this Easement enjoy ingress, egress and access from the Premises twenty-four (24) hours a day, seven (7) days a week to an open and improved public road which presently exists and which shall be adequate to service the Premises and the Improvements. If no such public road exists or ceases to exist in the future, Grantor will grant an exclusive easement to Grantee, Grantee's tenants

and assigns so that Grantee may, at its own expense, construct a suitable private access drive to the Premises and the Improvements. To the degree such access is across other property owned by Grantor, Grantor shall execute an easement within fifteen (15) days of evidencing this right and Grantor shall maintain access to the Access and Utility Easements in a free and open condition so that no interference is caused to Grantee by other grantees, licensees, invitees or agents of the Grantor which may utilize the Access and Utility Easements.

6. Grantor's Representations and Warranties. As an inducement for Grantee to enter into and be bound by the terms of this Easement, Grantor represents and warrants to Grantee and Grantee's successors and assigns that Grantor (i) has good and marketable title to the Premises, (ii) has the authority to enter into and be bound by the terms of this Easement, (iii) to the best of Grantor's knowledge, there are no pending or threatened lawsuits, administrative actions (including bankruptcy or insolvency proceedings), suits, claims or causes of action against Grantor or which may otherwise affect the Premises, and (iv) the Premises are not presently subject to an option, easement, agreement or other contract which may adversely affect Grantor's ability to fulfill its obligations under this Easement. Grantor covenants and agrees that it shall not grant an option or enter into any contract which will adversely affect Grantee's Intended Use (as defined in paragraph 2 above) of the Premises until this Easement expires or is terminated by Grantee. The representations and warranties of Grantor shall survive the termination or expiration of the term of this Easement.

7. Termination. Except as otherwise provided herein, this Easement may be terminated, without any penalty or further liability upon written notice as follows:

(a) By either party upon a default of any covenant or term hereof by the other party which default is not cured within sixty (60) days of receipt of written notice of default (without, however, limiting any other rights available to the parties pursuant to any other provisions hereof); provided, that if the defaulting party commences good faith efforts to cure the default within such period the cure period may be extended upon mutual agreement, in writing, of the parties hereto;

(b) Upon thirty (30) days' written notice by Grantee to Grantor if (i) Grantee is unable to obtain or maintain any license, permit or other Governmental Approval necessary for the construction and operation of the Improvements or Grantee's business or (ii) Grantee's Intended Use of the Premises is actually or constructively interfered with; or

(c) By Grantee for any reason upon written notice from Grantee to Grantor.

8. Lease or Sublease. Grantee at its sole discretion shall have the right, without the consent of or notice to Grantor, to license, lease, sublease or otherwise allow the occupancy of all or a portion of the Premises and the Improvements. Grantee's licensee(s) and tenant(s) or subtenant(s) shall be entitled to modify the tower and Improvements, and erect and install additional improvements and personal property on the Premises and Improvements, including but not limited to antennas, dishes, cabling, utilities, emergency or back up power, generators, and equipment shelters. Grantee's licensee(s) and tenant(s) or subtenant(s) shall be entitled to all rights of ingress and egress to the Premises, the right to install utilities on the Premises and the right to use the Premises for the Intended Use as if said licensee, tenant or subtenant were the Grantee under this Easement.

9. Taxes. Grantee shall pay any property taxes assessed on the Improvements. Grantor shall pay when due all property taxes and all other fees and assessments attributable to the Premises. In the event that Grantor fails to pay when due any taxes affecting the Premises, Grantee shall have the right but not the obligation to pay such taxes and demand reimbursement from Grantor of such payment. Grantor agrees to provide to Grantee a copy of any notice, assessment or billing relating to any real or personal property taxes for which Grantee is responsible under this Easement within thirty (30) days of receipt of same by Grantor. Grantee shall have no obligation to make payment of any real or personal property taxes until Grantee has received notice, assessment or billing relating to such payment in accordance herewith. Grantee shall have the right, at its sole option, and at its sole cost and expense, to appeal, challenge or seek modification of any real or personal property tax assessment or billing for which Grantee is wholly or partly responsible for payment under this Easement. Grantor shall reasonably cooperate with Grantee in filing, prosecuting and perfecting any appeal or challenge to real or personal property taxes as set forth herein, including but not limited to executing consent to appeal or other similar document.

10. Damage or Destruction. If the Premises or the Improvements are destroyed or damaged so as to hinder the effective use of the Improvements in Grantee's judgment, Grantee may elect to terminate this Easement as of the date of the damage or destruction by so notifying the Grantor.

11. Condemnation. If a condemning authority takes all of the Premises, or a portion sufficient in Grantee's determination, to render the Premises in the opinion of Grantee unsuitable for the use which Grantee was then making of the Premises, this Easement shall terminate the earlier of (i) the date title vests in the condemning authority or (ii) the date the condemning authority takes possession of the Premises or a portion of it. Grantor and Grantee shall share in the condemnation proceeds in proportion to the values of their respective interests in the Premises (which for Grantee shall include, where applicable, the value of its Improvements, moving expenses, prepaid Consideration, lost business, goodwill, and business relocation expenses). A sale of all or part of the Premises to a purchaser with the power of eminent domain in the face of the exercise of eminent domain power shall be treated as a taking by condemnation for the purposes of this paragraph. Except as provided in this paragraph, generally applicable condemnation law will apply in the event of a condemnation.

12. Insurance. Grantee, at Grantee's sole cost and expense, shall procure and maintain on the Premises and on the Improvements, bodily injury and property damage insurance with a combined single limit of at least One Million and 00/100 Dollars ($1,000,000.00) per occurrence. Such insurance shall insure, on an occurrence basis, against liability of Grantee, its employees and agents arising out of or in connection with Grantee's use of the Premises and Improvements. Grantor, at Grantor's sole cost and expense, shall procure and maintain on the Parent Parcel, bodily injury and property damage insurance with a combined single limit of at least One Million Dollars ($1,000,000) per occurrence. Such insurance shall insure, on an occurrence basis, against liability of Grantor, its employees and agents arising out of or in connection with Grantor's use, occupancy and maintenance of the Parent Parcel.

13. Interference. Grantor shall not, nor shall Grantor permit its Grantees, licensees, invitees or agents, to use any portion of the Parent Parcel or adjacent real property owned or controlled by Grantor in any way which interferes with Grantee's Intended Use of the Premises. Such interference shall be deemed a material breach of this Easement by Grantor and Grantor shall have

the responsibility to immediately terminate such interference. In the event such interference is not immediately rectified, Grantor acknowledges that continuing interference will cause irreparable injury to Grantee, and Grantee shall have the right, in addition to any other rights that it may have at law or in equity, to bring an action to enjoin such interference or to terminate this Easement with notice to Grantor.

14. Environmental Compliance. Grantor represents, warrants and agrees (1) that neither Grantor nor, to Grantor's knowledge, any third party has used, generated, stored or disposed of, or permitted the use, generation, storage or disposal of, any contaminants, oils, asbestos, PCBs, hazardous substances or wastes as defined by federal, state or local environmental laws, regulations or administrative orders or other materials the removal of which is required or the maintenance of which is prohibited, regulated or penalized by any federal, state or local government authority ("Hazardous Materials") on, under, about or within the Parent Parcel and/or Premises in violation of any law or regulation, and (2) that Grantor will not, and will not permit any third party to use, generate, store or dispose of any Hazardous Materials on, under, about or within the Parent Parcel and/or Premises in violation of any law or regulation. Grantee agrees that it will not use, generate, store or dispose of any Hazardous Material on, under, about or within the Premises in violation of any law or regulation. This Easement shall at the option of Grantee terminate and be of no further force or effect if Hazardous Materials are discovered to exist on the Parent Parcel and/or Premises through no fault of Grantee after Grantee takes possession of the Premises and Grantee shall be entitled to a refund of all the consideration paid in advance to Grantor under this Easement.

15. Environmental Indemnities.

(a) Grantor, its heirs, grantees, successors, and assigns shall indemnify, defend, reimburse and hold harmless Grantee from and against any and all environmental damages arising from the presence of Hazardous Materials upon, about or beneath the Parent Parcel and/or Premises, or migrating to or from the Parent Parcel and/or Premises, or arising in any manner whatsoever out of the violation of any environmental requirements pertaining to the Parent Parcel and/or Premises and any activities thereon, which conditions exist or existed prior to or at the time of the execution of this Easement or which may occur at any time in the future through no fault of Grantee.

(b) Grantee, its heirs, grantees, successors, and assigns shall indemnify, defend, reimburse and hold harmless Grantor from and against environmental damages caused by the presence of Hazardous Materials on the Premises arising solely as the result of Grantee's activities after the execution of this Easement.

(c) Notwithstanding the obligation of Grantor to indemnify Grantee pursuant to this Easement, Grantor shall, upon demand of Grantee, and at Grantor's sole cost and expense, promptly take all actions to remediate the Parent Parcel and/or Premises which are required by any federal, state or local governmental agency or political subdivision or which are reasonably necessary to mitigate environmental damages or to allow full economic use of the Premises, which remediation is necessitated from the presence upon, about or beneath the Parent Parcel and/or Premises of a Hazardous Material. Such actions shall include but not be limited to the investigation of the environmental condition of the Parent Parcel and/or Premises, the preparation of any feasibility studies, reports or remedial plans, and the performance of any cleanup, remediation, containment, operation, maintenance, monitoring or actions necessary to restore the Parent Parcel

and/or Premises to the condition existing prior to the introduction of Hazardous Material upon, about or beneath the Parent Parcel and/or Premises notwithstanding any lesser standard of remediation allowable under applicable law or governmental policies.

(d) The duties and indemnifications in this paragraph shall survive expiration or earlier termination of this Easement.

16. Notices. All notices, requests, demands and other communications hereunder shall be in writing and shall be deemed given if personally delivered or mailed, certified mail, return receipt requested, or via a nationally recognized overnight delivery service to the following addresses or to such other addresses as may be specified in writing at any time during the term of this Easement:

If to Grantor, to:

Douglas K. Polston
517 Polstontown Road, Russell Springs, KY 42642
Phone: 270-566-2863
Email: _____

If to Grantee, to:

TowerCo VI, LLC
5000 Valleystone Drive, Suite 200
Cary, North Carolina 27519
Attn: Property Management
Site ID #: KY0118

17. Title and Quiet Enjoyment. Grantor warrants and represents that (i) it has the full right, power, and authority to execute this Easement; (ii) it has good and marketable fee simple title to the Premises free and clear of any liens and encumbrances or mortgages; (iii) there are no easements, licenses, rights, covenants or restrictions on use related to or affecting the Premises which will interfere with Grantee's Intended Use of the Premises; and (iv) the execution of this Easement by Grantor will not cause a breach or an event of default of any other agreement(s) to which Grantor is a party, and (v) the Premises constitutes a legal lot without the need for any subdivision or platting approval. Grantor covenants that it shall comply with all applicable laws, regulations and requirements related to the Premises and that Grantee shall have the quiet enjoyment of the Premises during the term of this Easement. Grantor shall indemnify Grantee from and against any loss, cost, expense or damage including attorneys' fees associated with a breach of the foregoing covenants. In the event that Grantor fails to keep the Premises free and clear of any liens and encumbrances, Grantee shall have the right but not the obligation to satisfy such lien or encumbrance and whereupon Grantor shall pay to Grantee, upon demand, all costs expenses, and disbursements incurred by Grantee to satisfy the liens and encumbrances. Grantor agrees to indemnify and hold harmless Grantee from any and all claims and/or notices of non-compliance brought against Grantor for any breach by Grantor of this warranty, and Grantor agrees to allow Grantee to continue to quietly enjoy the use of Grantor's Premises while Grantor remedies any such non-compliance. Should Grantee's use of the Premises become compromised due to any breach of the warranty and covenants contained in this paragraph, Grantor acknowledges that

Grantee shall be substantially harmed and Grantee will seek to recover from Grantor any damages Grantee may sustain.

18. Occurrence of Grantor Default. The covenants, representations and conditions in this Easement are mutual and dependent. Upon the occurrence of any breach or nonperformance of any representation, warranty, covenant, agreement or undertaking made by Grantor in this Easement ("Default"), Grantee shall have the option to pursue any one or more of the following remedies without notice or demand: (a) Grantee, may, at its sole election, terminate the Easement; (b) Grantee, may, without being obligated and without waiving the Default, cure the Default, whereupon Grantor shall pay to Grantee, upon demand, all costs expenses, and disbursements incurred by Grantee to cure the Default. Grantee shall be permitted to offset said costs, expenses and disbursements incurred by Grantee against Consideration or any other amounts due or becoming due by Grantee to Grantor under this Easement; or (c) Grantee shall be entitled to pursue any and all other rights or remedies available at law or equity, including specific performance of this Easement, with respect to Grantor's default. In the event that Grantee terminates the Easement due to Grantor's Default, then a pro rata portion of the Consideration shall be refunded to Grantee.

19. Assignment. Grantor is prohibited from assigning, selling or otherwise transferring the Easement in whole or in part. Grantee may assign this Easement without the consent of or notice to Grantor. From and after the date this Easement has been sold, assigned or transferred by Grantee to a third party agreeing to be subject to the terms hereof, Grantee shall immediately be released from any and all liability under this Easement. Additionally, Grantee may mortgage or grant a security interest in this Easement and the Improvements, and may assign this Easement and the Improvements to any such mortgagees or holders of security interests including their successors and assigns (hereinafter collectively referred to as "Secured Parties"). If requested, Grantor shall execute such consent to financing as may reasonably be required by Secured Parties. Grantor agrees to notify Grantee and Grantee's Secured Parties simultaneously of any default by Grantee and to give Secured Parties the same right to cure any default as Grantee except that the cure period for any Secured Party shall not be less than ten (10) days after the receipt of the default notice If a termination, disaffirmance or rejection of the Easement pursuant to any laws (including any bankruptcy or insolvency laws) by Grantee shall occur, or if Grantor shall terminate this Easement for any reason, Grantor will give to the Secured Parties prompt notice thereof and Grantor will give the Secured Parties the right to enter upon the Premises during a thirty (30)-day period commencing upon the Secured Party's receipt of such notice for the purpose of removing any Improvements. Grantor acknowledges that the Secured Parties shall be third-party beneficiaries of this Easement.

20. Successors and Assigns. This Easement shall run with the Premises and shall be binding upon and inure to the benefit of the parties, their respective heirs, successors, personal representatives and assigns.

21. Waiver of Grantor's Lien. Grantor hereby waives any and all lien rights it may have, statutory or otherwise, in and to the Improvements or any portion thereof, regardless of whether or not same is deemed real or personal property under applicable laws.

22. Waiver of Incidental and Consequential Damages. Grantor will not assert any claim whatsoever against Grantee for loss of anticipatory profits or any other indirect, special, incidental

or consequential damages incurred by Grantor as a result of the construction, maintenance, operation or use of the Premises by Grantee or its agents, licensees or tenants.

23. Liability and Indemnity. Grantee shall indemnify and hold Grantor harmless from all claims (including reasonable attorneys' fees, costs and expenses of defending against such claims) arising from the negligence or willful misconduct of Grantee or Grantee's agents or employees in or about the Premises. Grantor shall indemnify and hold Grantee harmless from all claims (including reasonable attorneys' fees, costs and expenses of defending against such claims) arising from the negligence or willful misconduct of Grantor or Grantor's agents, employees, invitees, contractors or other tenants occurring in or about the Parent Parcel. The duties described herein survive termination of this Easement.

24. Right of First Refusal; Sale of the Premises. If Grantor elects (i) to sell or otherwise transfer to a third party all or any portion of the Parent Parcel or (ii) to grant to a third party by easement, or other legal instrument, an interest in and to any portion of the Parent Parcel for any purpose relating to operating and maintaining communications facilities or the management thereof, Grantee shall have the right of first refusal to meet any bona fide offer of sale, assignment, or any other transfer on the same terms and conditions as such offer. Grantor shall immediately provide the Grantee with a copy of the bona fide offer together with a notice describing the offer in sufficient detail. If Grantee fails to accept such bona fide offer within thirty (30) days after receipt of the foregoing, Grantor may sell or grant the easement or interest in the Premises in accordance with the terms of such bona fide offer.

25. Miscellaneous.

(a) The substantially prevailing party in any litigation arising hereunder shall be entitled to its reasonable attorney's fees and court costs, including appeals, if any.

(b) Each party agrees to furnish to the other, within ten (10) days after request, such truthful estoppel information as the other may reasonably request.

(c) This Easement constitutes the entire agreement and understanding of the parties with respect to the subject matter of this Easement, and supersedes all offers, negotiations and other agreements. There are no representations or understandings of any kind not set forth herein. Any amendments to said Easement must be in writing and executed by the parties.

(d) If either party is represented by a real estate broker in this transaction, that party shall be fully responsible for any fees due such broker and shall hold the other party harmless from any claims for commission by such broker.

(e) Grantor agrees to cooperate with Grantee in executing any documents necessary to protect Grantee's rights under this Easement or Grantee's use of the Premises, including but not limited to affidavits relating to title curative measures and subordination and non-disturbance agreements and to take any further action which Grantee may reasonably require as to effect the intent of this Easement.

(f) This Easement shall be construed in accordance with the laws of the state in which the Premises is situated.

(g) If any term of this Easement is found to be void or invalid, such invalidity shall not affect the remaining terms of this Easement, which shall continue in full force and effect.

(h) Upon request of Grantee, Grantor shall promptly execute and deliver to Grantee such documents as Grantee requests to evidence Grantee's rights in the Premises,

including a memorandum of option and a memorandum of Easement and/or amendments thereto. Grantee may file such documents of record in the property records in the county in which the Premises are located.

(i) Grantee may obtain title insurance on its interest in the Premises, and Grantor shall cooperate by executing documentation required by the title insurance company. In the event the Premises is encumbered by a mortgage or deed of trust, Grantor agrees to obtain and furnish, within thirty (30) days written request by Grantee, a non-disturbance agreement to the effect that Grantee and Grantee's tenants or licensees will not be disturbed in the occupancy of the Premises by any foreclosure; provided that the rights and interests of Grantee under this Easement shall be subject and subordinate to such mortgage or deed of trust.

(j) Grantor hereby irrevocably appoints Grantee or Grantee's agent as Grantor's agent to file applications on behalf of Grantor with federal, state and local governmental authorities which applications relate to Grantee's Intended Use of the Premises including but not limited to land use and zoning applications.

(k) This Easement may be executed in two or more counterparts, all of which shall be considered one and the same agreement and shall become effective when one or more counterparts have been signed by each of the parties, it being understood that all parties need not sign the same counterpart and that scanned or electronically reproduced copies of this Easement shall have the same force and effect as originals.

(l) Grantor will not, during the term of this Easement together with any extensions thereof, enter into any other easement, license, or other agreement for a similar purpose as set forth herein, on or adjacent to the Parent Parcel.

(m) In any case where the approval or consent of one party hereto is required, requested or otherwise to be given under this Easement, such party shall not unreasonably condition, delay or withhold its approval or consent.

26. Confidentiality. Notwithstanding anything to the contrary contained in this Easement, Grantor agrees and acknowledges that all of the terms of this Easement and any information furnished to Grantor by Grantee in connection therewith are confidential. Grantor shall not disclose any such terms or information without Grantee's prior written consent, except (i) to Grantor's attorney, accountant, lender and/or a prospective fee simple purchaser of Grantor's Parent Parcel, provided that such party agrees to adhere to the terms and provisions of this section, or (ii) as otherwise required by law. The terms and provisions of this section shall survive the execution and delivery of this Easement. Grantor acknowledges that the disclosure of such information to any other parties may cause Grantee irreparable harm, and in the event of such disclosure, as an additional remedy, Grantee shall have the right to terminate this Easement upon giving thirty (30) days written notice thereof to Grantor.

[SIGNATURES BEGIN ON NEXT PAGE]

IN WITNESS WHEREOF, Grantor and Grantee have executed this Easement as of the date affixed to their signatures below.

GRANTOR:

DOUGLAS K. POLSTON, single

By: Douglas K Polston
Name: Douglas K. Polston
Date: 3/31/25

GRANTOR ACKNOWLEDGEMENT:

STATE OF KENTUCKY)
)
COUNTY OF RUSSELL)

The foregoing instrument was acknowledged before me this 31st day of March, 2025 by Douglas K. Polston.

Penny L Jones
Notary Public
Print Name Penny L Jones
Title (and Rank): KYNP
My commission expires: 3-1-2027

(seal) OFFICIAL SEAL
PENNY JONES
NOTARY PUBLIC - KENTUCKY
STATE-AT-LARGE ID# KYNP67424
My Commission Expires March 1, 2027

GRANTEE:

TOWERCO VI, LLC, a Delaware limited liability company

By: _____
Name: Mike Smith
Title: CFO
Date: 4/16/25

GRANTEE ACKNOWLEDGEMENT:

STATE OF NORTH CAROLINA)
)
COUNTY OF WAKE)

The foregoing instrument was acknowledged before me this 16th day of April, 2025 by Mike Smith, CFO of TowerCo VI, LLC, a Delaware limited liability company, on behalf of the limited liability company.

_____
Notary Public
Print Name Jill E. Harvey
Title (and Rank): Notary Public
My commission expires: 7/26/2025 (seal)

JILL E. HARVEY
My Comm. Expires
NOTARY PUBLIC
7/26/25
WAKE COUNTY, NC

EXHIBIT "A"

DESCRIPTION OF PARENT PARCEL

The Parent Parcel is described and/or depicted as follows:

BEGINNING at a found 5/8" rebar with cap on the Right-of-Way of Kentucky Highway #1611, (60' Assumed Right-of-Way, Deed Not Found at Time of Survey), a corner to Rodney Eastham, (Deed Book 293 Page 465); THENCE with the Right-of-Way of Kentucky Highway #1611 as it meanders:

N 29 deg. 37 min. 17 sec. E 45.31 feet
N 26 deg. 55 min. 45 sec. E 50.62 feet
N 26 deg. 01 min. 41 sec. E132.40 feet
N 24 deg. 46 min. 24 sec. E 50.39 feet
N 22 deg. 44 min. 55 sec. E 52.41 feet
N 18 deg. 57 min. 10 sec. E 53.15 feet
N 13 deg. 12 min. 20 sec. E 51.45 feet
N 08 deg. 05 min. 21 sec. E 9.42 feet

to a set 5/8" rebar with cap on the Right-of-Way of Kentucky Highway #1611, and on the Right-of-Way Polstontown Road, (50' Right-of-Way * Deed Book 73 Page 266, 268, and 269); THENCE with the Right-of-Way of Polstontown Road as it meanders:

S 89 deg. 34 min. 05 sec. E 41.00 feet
N 87 deg. 55 min. 51 sec. E 54.52 feet
N 84 deg. 15 min. 38 sec. E 54.16 feet
N 83 deg. 47 min. 20 sec. E185.56 feet
N 83 deg. 55 min. 43 sec. E164.11 feet
N 86 deg. 03 min. 30 sec. E 44.38 feet
N 88 deg. 00 min. 56 sec. E 47.38 feet
S 87 deg. 23 min. 02 sec. E 46.45 feet
S 83 deg. 37 min. 54 sec. E 48.22 feet
S 80 deg. 22 min. 33 sec. E 57.24 feet
S 79 deg. 46 min. 16 sec. E139.53 feet
S 80 deg. 20 min. 40 sec. E 92.35 feet
S 81 deg. 14 min. 58 sec. E 75.81 feet

to a set 5/8" rebar with cap on the Right-of-Way of Polstontown Road, (Being located N 05 deg. 01 min. 03 sec. E 5.74 feet from a corner fence post), a corner to Doug Polston (Deed Book 196 Page 267); THENCE with the Right-of-Way of Kentucky Highway #1611 as it meanders:

N 29 deg. 37 min. 17 sec. E 45.31 feet
N 26 deg. 55 min. 45 sec. E 50.62 feet
N 26 deg. 01 min. 41 sec. E132.40 feet
N 24 deg. 46 min. 24 sec. E 50.39 feet
N 22 deg. 44 min. 55 sec. E 52.41 feet
N 18 deg. 57 min. 10 sec. E 53.15 feet
N 13 deg. 12 min. 20 sec. E 51.45 feet
N 08 deg. 05 min. 21 sec. E 9.42 feet

to a set 5/8" rebar with cap on the Right-of-Way of Kentucky Highway #1611,

and on the Right-of-Way Polstontown Road, (50' Right-of-Way * Deed Book 73 Page 266, 268, and 269); THENCE with the Right-of-Way of Polstontown Road as it meanders:

S 89 deg. 34 min. 05 sec. E 41.00 feet
N 87 deg. 55 min. 51 sec. E 54.52 feet
N 84 deg. 15 min. 38 sec. E 54.16 feet
N 83 deg. 47 min. 20 sec. E185.56 feet
N 83 deg. 55 min. 43 sec. E164.11 feet
N 86 deg. 03 min. 30 sec. E 44.38 feet
N 88 deg. 00 min. 56 sec. E 47.38 feet

S 87 deg. 23 min. 02 sec. E 45.45 feet
S 83 deg. 37 min. 54 sec. E 48.22 feet
S 80 deg. 22 min. 33 sec. E 57.24 feet
S 79 deg. 46 min. 16 sec. E139.53 feet
S 80 deg. 20 min. 40 sec. E 92.35 feet
S 81 deg. 14 min. 58 sec. E 75.81 feet

to a set 5/8" rebar with cap on the Right-of-Way of Polstontown Road, (Being located at N 05 deg. 01 min. 03 sec. E 5.74 feet from a corner fence post), a corner to Doug Polston, (Deed Book 196 Page 267); THENCE with the lines of Doug Polston, S 02 deg. 26 min. 07 sec. W 96.73 feet to a found ½" rebar with cap stamped "Flannagan 2640"; THENCE S 78 deg. 40 min. 07 sec. 209.73 feet to a set 5/8" rebar with cap, a corner to Doug Polston, and a corner to Wendell Polston Estate Subdivision, (Tract #2, Will Book 24 Page 17, Being a portion of Deed Book 121 Page 576, Deed Book 733, Deed Book 57 Page 38, Deed Book 57 Page 40, Deed Book 140 Page 3, and all of Deed Book 215 Page 608); THENCE with the lines of Tract #2, S 02 deg. 32 min. 27 sec. W 178.56 feet to a set 5/8" rebar with cap; THENCE N 88 deg. 50 min. 23 sec. W 271.58 feet to a 10" dogwood at a fence corner, a corner to Tract #2, and a corner to Rodney Eastham, (Deed Book 293 Page 465); THENCE with the line of Rodney Eastham, N 88 deg. 50 min. 23 sec. W 1,135.93 feet to the POINT OF BEGINNING and CONTAINING 12.158 ACRES, more or less according to survey by Richard Wood, P.L.S. #3609, Pride Land Surveying Inc., dated February 11th, 2014; Being a portion of the property conveyed to Doug K. Polston, Lisa Polston Blakeman, Anthony Scott Polston, by Will of Wendell Polston, dated August 5, 2013, and recorded in Will Book 24 Page 17, on August 26th, 2013. Being a portion of the property conveyed to Wendell Polston and Joann Polston, by Deed Book 121 Page 576, dated May 21st, 1990, from Merkel Zimmerman, Faye Zimmerman, Avalynn Zimmerman, Rosie Zimmerman, Elmer Thomas Zimmerman, Janice Zimmerman, Royce Zimmerman, Joyce Zimmerman, Glenna Coffey, Donnie Coffey, Norma Smith, Lonzo Lee Smith, Ronnie G. Zimmerman and Judith Zimmerman. Wendell Polston derived title to the interest of Joann Polston in Deed Book 280 Page 733, dated December 9, 2010.

Parcel No. 065-00-00-014.01

EXHIBIT "B"

DESCRIPTION OR DEPICTION OF PREMISES

An approximately 100' x 100' (10,000) square foot tract of land, together with easements for ingress, egress and utilities described or depicted as follows:

(see attached)

Note: At Grantee's option, Grantee may replace this Exhibit with an exhibit setting forth the legal description of the Premises, or an as-built drawing depicting the site. Any visual or textual representation of the Improvements and facilities is illustrative only, and does not limit the rights of Grantee as provided for in the Easement. Without limiting the generality of the foregoing:

1. The Premises may be setback from the boundaries of Grantor's property as required by the applicable governmental authorities.
2. The access road's width may be modified as required by governmental authorities, including police and fire departments.
3. The locations of any access and utility easements are illustrative only. Actual locations may be determined by Grantee and/or the servicing utility company in compliance with local laws and regulations.

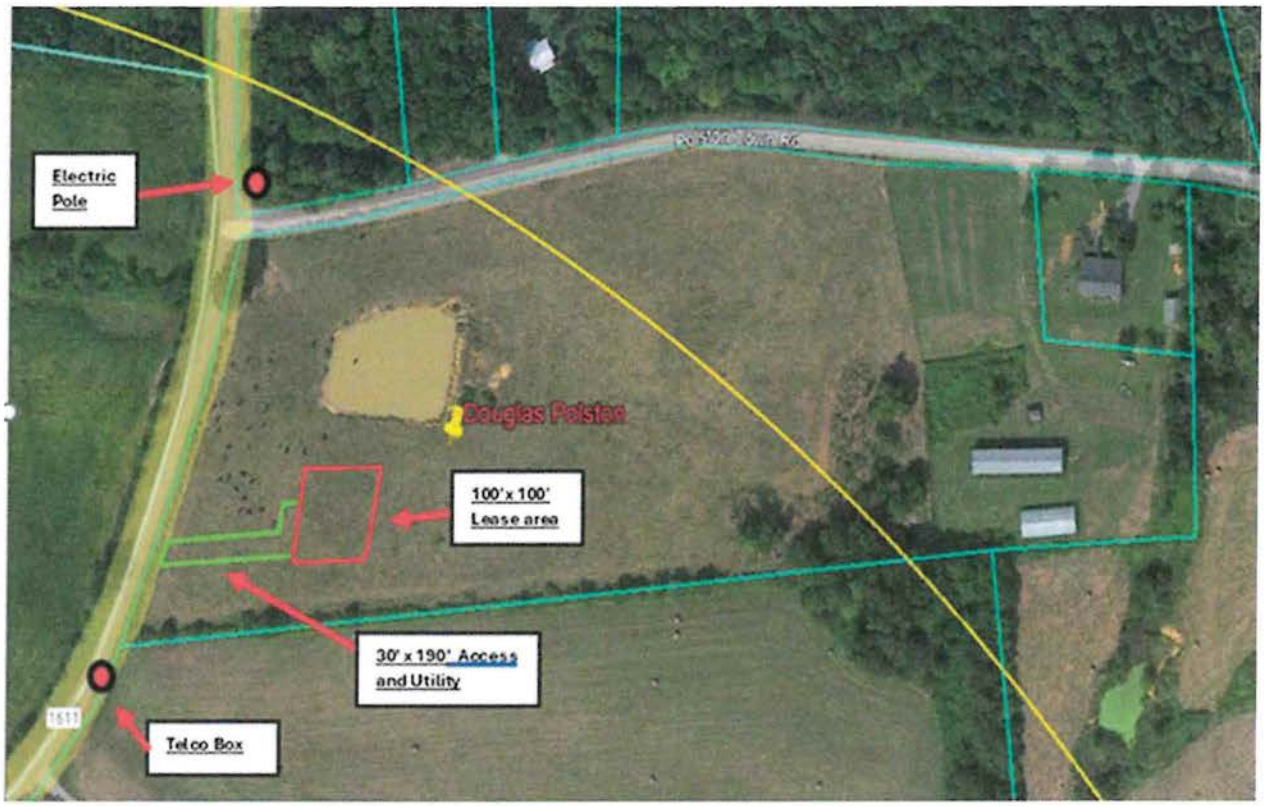
Electric Pole
Douglas Polston
100' x 100' Lease area
30' x 190' Access and Utility
Telco Box

Map Number 065-00-00-014.01
POLSTON DOUGLAS K
235 POLSTON TOWN ROAD
RUSSELL SPRINGS KY 42642

qPublic.net™ Russell County, KY PVA

Elizabeth Williams Search search...

Layers Map Search Results Report Sales Search Sales List Sales Results Comp Search Comp Results Tax Estimator Home

Parcel Summary

Map Number	065-00-00-014.01
Account Number	90386 (PID: 379937 PTID: 174008)
Location Address	POLSTON TOWN RD
Tax District	00
Property Class	FARM
Description	65-14.01 (10 ACRES)
Acres	10
Deed Information	345/221

View Map

Owner Information

Current Owner
POLSTON DOUGLAS K
235 POLSTON TOWN ROAD
RUSSELL SPRINGS KY 42642

Land Information

Valuation

Sales Information

Columns

Sale Date	Sale Price	Deed Book	Deed Page	Previous Owner	Sale Type
10/31/2019		345	221	POLSTON DOUG	
05/01/2014	$40,000	304	044	POLSTON WENDELL	

Information

Russell County, KY
410 Monument Square
Jamestown, KY 42629
Monday- Friday 8-4 p.m. CST

Russell County PVA
Tim Popplewell
(270) 343-4395

Announcements

How to use the Beacon site – view Demo Videos

Map Number 065-00-00-013.07
METZCAR ROBERT T. & JAMES R. HANEY
1343 HARTWOOD
CINCINNATI OH 45240

qPublic.net™ Russell County, KY PVA

Elizabeth Williams Search search...

Layers Map Search Results Report Sales Search Sales List Sales Results Comp Search Comp Results Tax Estimator Home

Parcel Summary

Map Number	065-00-00-013.07
Account Number	99 (PID: 370678 PTID: 183163)
Location Address	4652 HWY. 1611
Tax District	00
Property Class	RESIDENTIAL
Description	65-13.07, LOT 1 & 1.02 ACRES & MOBILE HOME
Acres	1.02
Deed Information	387/630

View Map

Owner Information

Current Owner
METZCAR ROBERT T. & JAMES R. HANEY
1343 HARTWOOD
CINCINNATI OH 45240

Land Information

Valuation

Sales Information

Columns

Sale Date	Sale Price	Deed Book	Deed Page	Previous Owner	Sale Type
02/19/2024	$1,500	387	630	METZCAR EUGENE	
10/01/1993	$2,445	139	385	EUGENE METZCAR	

Information

Russell County, KY
410 Monument Square
Jamestown, KY 42629
Monday- Friday 8-4 p.m. CST

Russell County PVA
Tim Popplewell
(270) 343-4395

Announcements

How to use the Beacon site – view Demo Videos

Map Number 065-00-00-013.09
SWEARINGER BRIAN E, REBECCA S GELS &
JENNIFER L MILLS
2005 CARTER SCHOOL RD
STANFORD KY 40484-8177

qPublic.net™ Russell County, KY PVA

Elizabeth Williams Search search...

Layers Map Search Results Report Sales Search Sales List Sales Results Comp Search Comp Results Tax Estimator Home

Parcel Summary

Map Number	065-00-00-013.09
Account Number	93713 (PID: 372673 PTID: 176775)
Location Address	63 POLSTON TOWN RD
Tax District	00
Property Class	RESIDENTIAL
Description	65-13.09 (.5 ACRES)
Acres	0.5
Deed Information	388/210

View Map

Owner Information

Current Owner
SWEARINGER BRIAN E, REBECCA S GELS &
JENNIFER L MILLS
2005 CARTER SCHOOL RD
STANFORD KY 40484-8177

Land Information

Valuation

Sales Information

Columns

Sale Date	Sale Price	Deed Book	Deed Page	Previous Owner	Sale Type
08/14/2024	$2,400	388	210	SWEARINGER CHESTER E & PHYLLIS C	
01/28/2020	$2,400	346	501	TERRELL DAWSON & BETTY	
10/01/1993	$1,222	140	-33	EUGENE METZCAR	

Information

Russell County, KY
410 Monument Square
Jamestown, KY 42629
Monday- Friday 8-4 p.m. CST

Russell County PVA
Tim Popplewell
(270) 343-4395

Announcements

How to use the Beacon site – view Demo Videos

Map Number 065-00-00-013.04
SWEARINGER BRIAN E, REBECCA S GELS &
JENNIFER L MILLS
2005 CARTER SCHOOL RD
STANFORD KY 40484-8177

qPublic.net™ Russell County, KY PVA

Elizabeth Williams Search search...

Layers Map Search Results Report Sales Search Sales List Sales Results Comp Search Comp Results Tax Estimator Home

Parcel Summary

Map Number	065-00-00-013.04
Account Number	93518 (PID: 381794 PTID: 176610)
Location Address	63 POLSTON TOWN RD
Tax District	00
Property Class	RESIDENTIAL
Description	65-13.04 (.99 ACRE LOT & CABIN)
Acres	0.99
Deed Information	388/210

View Map

Owner Information

Current Owner
SWEARINGER BRIAN E, REBECCA S GELS &
JENNIFER L MILLS
2005 CARTER SCHOOL RD
STANFORD KY 40484-8177

Land Information

Valuation

Mobile Home Information

Residential Improvement Information

Sales Information

Columns

Sale Date	Sale Price	Deed Book	Deed Page	Previous Owner	Sale Type
08/14/2024	$55,000	388	210	SWEARINGER CHESTER	
10/01/1993	$2,445	221	625	EUGENE METZCAR	

Information

Russell County, KY
410 Monument Square
Jamestown, KY 42629
Monday- Friday 8-4 p.m. CST

Russell County PVA
Tim Popplewell
(270) 343-4395

Announcements

How to use the Beacon site – view Demo Videos

Map Number 065-00-00-013.06
COFFEY TROY L & ALLISON B
2091 PARKS RIDGE RD
RUSSELL SPRINGS KY 42642

qPublic.net™ Russell County, KY PVA

Elizabeth Williams Search search...

Layers | Map | Search | Results | Report | Sales Search | Sales List | Sales Results | Comp Search | Comp Results | Tax Estimator | Home

Parcel Summary

Map Number	065-00-00-013.06
Account Number	81327 (PID: 385428 PTID: 166433)
Location Address	HWY 1611
Tax District	00
Property Class	FARM
Description	65-13.06 (78.05 ACRES)
Acres	78.05
Deed Information	325/133

View Map

Owner Information

Current Owner
COFFEY TROY L & ALLISON B
2091 PARKS RIDGE RD
RUSSELL SPRINGS KY 42642

Land Information

Valuation

Sales Information

Columns

Sale Date	Sale Price	Deed Book	Deed Page	Previous Owner	Sale Type
04/05/2017	$35,000	325	133	COFFEY DONNIE L & GLENNA	
01/01/1990	$66,000	123	499	LOGAN ZIMMERMAN	

Information

Russell County, KY
410 Monument Square
Jamestown, KY 42629
Monday- Friday 8-4 p.m. CST

Russell County PVA
Tim Popplewell
(270) 343-4395

Announcements

How to use the Beacon site – view Demo Videos

Map Number 065-00-00-013.11
KING CYNTHIA SUE & DALLAS JAY
235 POLSTON TOWN RD
RUSSELL SPRINGS KY 42642

qPublic.net™ Russell County, KY PVA

Elizabeth Williams Search search...

Layers | Map | Search | Results | Report | Sales Search | Sales List | Sales Results | Comp Search | Comp Results | Tax Estimator | Home

Parcel Summary

Map Number	065-00-00-013.11
Account Number	90386 (PID: 371096 PTID: 174007)
Location Address	235 POLSTON TOWN RD.
Tax District	00
Property Class	RESIDENTIAL
Description	65-13.11 (3.4 ACRES & 2000 MOBILE HOME)
Acres	3.476
Deed Information	375/221

View Map

Owner Information

Current Owner
KING CYNTHIA SUE & DALLAS JAY
235 POLSTON TOWN RD
RUSSELL SPRINGS KY 42642

Land Information

Valuation

Mobile Home Information

Residential Improvement Information

Sales Information

Columns

Sale Date	Sale Price	Deed Book	Deed Page	Previous Owner	Sale Type
01/27/2023	$156,500	375	221	POLSTON DOUGLAS K	
10/31/2019		345	218	POLSTON DOUG	

Information

Russell County, KY
410 Monument Square
Jamestown, KY 42629
Monday- Friday 8-4 p.m. CST

Russell County PVA
Tim Popplewell
(270) 343-4395

Announcements

How to use the Beacon site – view Demo Videos

Map Number 065-00-00-035.05
AREHART WILLIAM
4903 HWY 1611
RUSSELL SPRINGS KY 42642

qPublic.net™ Russell County, KY PVA

Elizabeth Williams Search search...

Layers Map Search Results Report Sales Search Sales List Sales Results Comp Search Comp Results Tax Estimator Home

Parcel Summary

Map Number	065-00-00-035.05
Account Number	99 (PID: 371988 PTID: 181495)
Location Address	4903 HWY. 1611
Tax District	00
Property Class	FARM
Description	65-35.05, 15.2 ACRES, HOUSE & BUILDING
Acres	15.286
Deed Information	368/541

View Map

Information

Russell County, KY
410 Monument Square
Jamestown, KY 42629
Monday- Friday 8-4 p.m. CST

Russell County PVA
Tim Popplewell
(270) 343-4395

Announcements

How to use the Beacon site – view Demo Videos

Owner Information

Current Owner
AREHART WILLIAM
4903 HWY 1611
RUSSELL SPRINGS KY 42642

Land Information

Valuation

Residential Improvement Information

Sales Information

Columns

Sale Date	Sale Price	Deed Book	Deed Page	Previous Owner	Sale Type
05/23/2022	$500,000	368	541	BASTIN MARTIN & ANGELA	
06/15/2018	$55,000	334	051	EASTHAM RODNEY WAYNE & LISA	

Map Number 065-00-00-035.02
EASTHAM RODNEY WAYNE & LISA
4893 HWY. 1611
RUSSELL SPRINGS, KY 42642

qPublic.net™ Russell County, KY PVA

Elizabeth Williams Search search...

Layers Map Search Results Report Sales Search Sales List Sales Results Comp Search Comp Results Tax Estimator Home

Parcel Summary

Map Number	065-00-00-035.02
Account Number	82827 (PID: 375548 PTID: 167676)
Location Address	4893 HWY. 1611
Tax District	00
Property Class	FARM
Description	65-35.02, 2009 MOBILE HOME & 13.135 AC.
Acres	13.135
Deed Information	293/477

View Map

Information

Russell County, KY
410 Monument Square
Jamestown, KY 42629
Monday- Friday 8-4 p.m. CST

Russell County PVA
Tim Popplewell
(270) 343-4395

Announcements

How to use the Beacon site – view Demo Videos

Owner Information

Current Owner
EASTHAM RODNEY WAYNE & LISA
4893 HWY. 1611
RUSSELL SPRINGS, KY 42642

Land Information

Valuation

Mobile Home Information

Sales Information

Columns

Sale Date	Sale Price	Deed Book	Deed Page	Previous Owner	Sale Type
		293	465		

Map Number 065-00-00-011.00
WILSON T A
PO BOX 178
RUSSELL SPRINGS, KY 42642

qPublic.net™ Russell County, KY PVA

Elizabeth Williams Search search...

Layers Map Search Results Report Sales Search Sales List Sales Results Comp Search Comp Results Tax Estimator Home

Parcel Summary

Map Number	065-00-00-011.00
Account Number	95476 (PID: 382936 PTID: 178249)
Location Address	HWY. 1611
Tax District	00
Property Class	FARM
Description	65-11 (77.44 ACRES)
Acres	77.44
Deed Information	85/42

View Map

Owner Information

Current Owner
WILSON T A
PO BOX 178
RUSSELL SPRINGS, KY 42642

Land Information

Valuation

Sales Information

Columns

Sale Date	Sale Price	Deed Book	Deed Page	Previous Owner	Sale Type
01/01/1979		85	42	CHLOE MORGAN	

Information

Russell County, KY
410 Monument Square
Jamestown, KY 42629
Monday- Friday 8-4 p.m. CST

Russell County PVA
Tim Popplewell
(270) 343-4395

Announcements

How to use the Beacon site – view Demo Videos

Map Number 065-00-00-012.01
ADAMS JOHN D & CHERYL P
2894 HWY 1611
RUSSELL SPRINGS KY 42642

qPublic.net™ Russell County, KY PVA

Elizabeth Williams Search search...

Layers Map Search Results Report Sales Search Sales List Sales Results Comp Search Comp Results Tax Estimator Home

Parcel Summary

Map Number	065-00-00-012.01
Account Number	95382 (PID: 370431 PTID: 178165)
Location Address	HWY. 1611
Tax District	00
Property Class	FARM
Description	65-12.01 (28.41 ACRES)
Acres	28.4
Deed Information	382/764

View Map

Owner Information

Current Owner
ADAMS JOHN D & CHERYL P
2894 HWY 1611
RUSSELL SPRINGS KY 42642

Land Information

Valuation

Sales Information

Columns

Sale Date	Sale Price	Deed Book	Deed Page	Previous Owner	Sale Type
02/06/2024	$284,000	382	764	WILSON JAMES TERILL	
01/01/1990	$26,000	121	563	F. HOLDER	

Information

Russell County, KY
410 Monument Square
Jamestown, KY 42629
Monday- Friday 8-4 p.m. CST

Russell County PVA
Tim Popplewell
(270) 343-4395

Announcements

How to use the Beacon site – view Demo Videos

Map Number 065-00-00-013.12
PATTERSON MICHELLE
1517 OTTAWA DR
ROYAL OAK MI 48073

qPublic.net™ Russell County, KY PVA

Elizabeth Williams Search search...

Layers | Map | Search | Results | Report | Sales Search | Sales List | Sales Results | Comp Search | Comp Results | Tax Estimator | Home

Parcel Summary

Map Number	065-00-00-013.12
Account Number	89111 (PID: 370532 PTID: 172959)
Location Address	HWY. 1611
Tax District	00
Property Class	RESIDENTIAL
Description	65-13.12 (LOT 2 & .53 ACRE LOT)
Acres	0.53
Deed Information	387/625

View Map

Owner Information

Current Owner
PATTERSON MICHELLE
1517 OTTAWA DR
ROYAL OAK MI 48073

Land Information

Valuation

Sales Information

Columns

Sale Date	Sale Price	Deed Book	Deed Page	Previous Owner	Sale Type
02/19/2024	$4,500	383	358	METZCAR THOMAS R. & NANCY L.	

Information

Russell County, KY
410 Monument Square
Jamestown, KY 42629
Monday- Friday 8-4 p.m. CST

Russell County PVA
Tim Popplewell
(270) 343-4395

Announcements

How to use the Beacon site - view Demo Videos

ClarkQuinn

www.clarkquinnlaw.com

Russell L. Brown
Attorney at Law
rbrown@clarkquinnlaw.com

320 N. Meridian St., Ste. 1100
Indianapolis, IN 46204
(317) 637-1321 main
(317) 687-2344 fax

July 30, 2025

Notice of Proposed Construction of
Wireless Communications Facility
Site Name: Lake Valley

Cellco Partnership, d/b/a Verizon Wireless and TowerCo VI, LLC are filing an application with the Kentucky Public Service Commission ("PSC") to construct a new wireless communications facility on a site located at the southeast corner of the intersection of HWY 1611 and Polson Town Road, Russell Springs, KY 42642. (North Latitude: (36° 58' 16.42", West Longitude 84° 58' 53.50"). The proposed facility will include a 255-foot tall antenna tower, plus a 5-foot lightning arrestor and related ground facilities. This facility is needed to provide improved coverage for wireless communications in the area.

This notice is being sent to you because the County Property Valuation Administrator's records indicate that you may own property that is within a 500' radius of the proposed tower site or contiguous to the property on which the tower is to be constructed. You have a right to submit testimony to the Kentucky Public Service Commission ("PSC"), either in writing or to request intervention in the PSC's proceedings on the application. You may contact the PSC for additional information concerning this matter at: Kentucky Public Service Commission, Executive Director, 211 Sower Boulevard, P.O. Box 615, Frankfort, Kentucky 40602. Please refer to docket number2025-00252 in any correspondence sent in connection with this matter.

We have attached a map showing the site location for the proposed tower. Applicant's radio frequency engineers assisted in selecting the proposed site for the facility, and they have determined it is the proper location and elevation needed to provide quality service to wireless customers in the area. Please feel free to contact us at 317-637-1321 if you have any comments or questions about this proposal.

Sincerely,
Russell L. Brown

Attorney for Applicant
RLB/mnw
Enclosure

Location Map

ClarkQuinn
lark, Quinn, Moses, Scott & Grahn, LLP

CERTIFIED MAIL®

9589 0710 5270 1687 9043 29

FIRST-CLASS

US POSTAGE IMI PITNEY BOWES

ZIP 46204
02 7H
0006035028

$ 010.44⁰
JUL 30 2025

POLSTON DOUGLAS K
235 POLSTON TOWN ROAD
RUSSELL SPRINGS KY 42642

ClarkQuinn
ark, Quinn, Moses, Scott & Grahn, LLP

PLACE STICKER AT TOP OF ENVELOPE TO THE RIGHT
OF THE RETURN ADDRESS, FOLD AT DOTTED LINE

CERTIFIED MAIL®

9589 0710 5270 1687 9043 36

FIRST-CLASS

US POSTAGE IMI PITNEY BOWES

ZIP 46204
02 7H
0006035028

$ 010.44⁰
JUL 30 2025

METZCAR ROBERT T.
& JAMES R. HANEY
1343 HARTWOOD
CINCINNATI OH 45240

ClarkQuinn
lark, Quinn, Moses, Scott & Grahn, LLP

PLACE STICKER AT TOP OF ENVELOPE TO THE RIGHT
OF THE RETURN ADDRESS, FOLD AT DOTTED LINE

CERTIFIED MAIL®

9589 0710 5270 1687 9043 43

FIRST-CLASS

US POSTAGE IMI PITNEY BOWES

ZIP 46204
02 7H
0006035028

$ 010.44⁰
JUL 30 2025

SWEARINGER BRIAN E,
REBECCA S GELS & JENNIFER L MILLS
2005 CARTER SCHOOL RD
STANFORD KY 40484-8177

ClarkQuinn
lark, Quinn, Moses, Scott & Grahn, LLP

CERTIFIED MAIL®

9589 0710 5270 1687 9043 50

FIRST-CLASS

US POSTAGE PITNEY BOWES

ZIP 46204
02 7H
0006035028

$ 010.44⁰
JUL 30 2025

COFFEY TROY L & ALLISON B
2091 PARKS RIDGE RD
RUSSELL SPRINGS KY 42642

PLACE STICKER AT TOP OF ENVELOPE TO THE RIGHT
OF THE RETURN ADDRESS, FOLD AT DOTTED LINE

ClarkQuinn
ark, Quinn, Moses, Scott & Grahn, LLP

CERTIFIED MAIL®

9589 0710 5270 1687 9043 67

FIRST-CLASS

US POSTAGE PITNEY BOWES

ZIP 46204
02 7H
0006035028

$ 010.44⁰
JUL 30 2025

KING CYNTHIA SUE
& DALLAS JAY
235 POLSTON TOWN RD
RUSSELL SPRINGS KY 42642

PLACE STICKER AT TOP OF ENVELOPE TO THE RIGHT
OF THE RETURN ADDRESS, FOLD AT DOTTED LINE

ClarkQuinn
ark, Quinn, Moses, Scott & Grahn, LLP

CERTIFIED MAIL®

9589 0710 5270 1687 9043 74

FIRST-CLASS

US POSTAGE PITNEY BOWES

ZIP 46204
02 7H
0006035028

$ 010.44⁰
JUL 30 2025

AREHART WILLIAM
4903 HWY 1611
RUSSELL SPRINGS KY 42642

ClarkQuinn
Clark, Quinn, Moses, Scott & Grahn, LLP

CERTIFIED MAIL®

9589 0710 5270 1687 9043 81

FIRST-CLASS

US POSTAGE IMI PITNEY BOWES

ZIP 46204
02 7H
0006035028

$ 010.44⁰
JUL 30 2025

EASTHAM RODNEY WAYNE & LISA
4893 HWY. 1611
RUSSELL SPRINGS, KY 42642

ClarkQuinn
Clark, Quinn, Moses, Scott & Grahn, LLP

PLACE STICKER AT TOP OF ENVELOPE TO THE RIGHT
OF THE RETURN ADDRESS, FOLD AT DOTTED LINE

CERTIFIED MAIL®

9589 0710 5270 1687 9043 98

FIRST-CLASS

US POSTAGE IMI PITNEY BOWES

ZIP 46204
02 7H
0006035028

$ 010.44⁰
JUL 30 2025

WILSON T A
PO BOX 178
RUSSELL SPRINGS, KY 42642

ClarkQuinn
Clark, Quinn, Moses, Scott & Grahn, LLP

PLACE STICKER AT TOP OF ENVELOPE TO THE RIGHT
OF THE RETURN ADDRESS, FOLD AT DOTTED LINE

CERTIFIED MAIL®

9589 0710 5270 1687 9044 04

FIRST-CLASS

US POSTAGE IMI PITNEY BOWES

ZIP 46204
02 7H
0006035028

$ 010.44⁰
JUL 30 2025

ADAMS JOHN D & CHERYL P
2894 HWY 1611
RUSSELL SPRINGS KY 42642

ClarkQuinn
Clark, Quinn, Moses, Scott & Grahn, LLP

PLACE STICKER AT TOP OF ENVELOPE TO THE RIGHT
OF THE RETURN ADDRESS, FOLD AT DOTTED LINE

CERTIFIED MAIL®

9589 0710 5270 1687 9044 11

FIRST-CLASS

US POSTAGE IMI PITNEY BOWES

ZIP 46204
02 7H
0006035028

$ 010.44⁰
JUL 30 2025

PATTERSON MICHELLE
1517 OTTAWA DR
ROYAL OAK MI 48073

SENDER: *COMPLETE THIS SECTION*

- Complete items 1, 2, and 3.
- Print your name and address on the reverse so that we can return the card to you.
- Attach this card to the back of the mailpiece, or on the front if space permits.

1. Article Addressed to:

SWEARINGER BRIAN E,
REBECCA [illegible]ELS & JENNIFER L MILLS
2005 CARTER SCHOOL RD
STANFORD KY 40484-8177

9590 9402 9112 4225 8437 75

2. Article Number *(Transfer from service label)*

9589 0710 5270 1687 9043 43

PS Form 3811, July 2020 PSN 7530-02-000-9053

COMPLETE THIS SECTION ON DELIVERY

A. Signature
X Jennifer Mills ☐ Agent ☐ Addressee

B. Received by *(Printed Name)* Jennifer Mills
C. Date of Delivery 8/5/25

D. Is delivery address different from item 1? ☐ Yes
If YES, enter delivery address below: ☐ No

STANFORD, KENTUCKY 40484 USPS AUG - 5 2025

3. Service Type
☐ Adult Signature
☐ Adult Signature Restricted Delivery
☐ Certified Mail®
☐ Certified Mail Restricted Delivery
☐ Collect on Delivery
☐ Collect on Delivery Restricted Delivery
☐ Insured Mail
☐ Insured Mail Restricted Delivery (over $500)
☐ Priority Mail Express®
☐ Registered Mail™
☐ Registered Mail Restricted Delivery
☐ Signature Confirmation™
☐ Signature Confirmation Restricted Delivery

Domestic Return Receipt

SENDER: *COMPLETE THIS SECTION*

- Complete items 1, 2, and 3.
- Print your name and address on the reverse so that we can return the card to you.
- Attach this card to the back of the mailpiece, or on the front if space permits.

1. Article Addressed to:

COFFEY TROY L & ALLISON B
2091 PARKS RIDGE RD
RUSSELL SPRINGS KY 42642

9590 9402 9112 4225 8437 68

2. Article Number *(Transfer from service label)*

9589 0710 5270 1687 9043 50

PS Form 3811, July 2020 PSN 7530-02-000-9053

COMPLETE THIS SECTION ON DELIVERY

A. Signature
X Amyah Coffey ☐ Agent ☐ Addressee

B. Received by *(Printed Name)*
C. Date of Delivery 8-4

D. Is delivery address different from item 1? ☐ Yes
If YES, enter delivery address below: ☐ No

3. Service Type
☐ Adult Signature
☐ Adult Signature Restricted Delivery
☐ Certified Mail®
☐ Certified Mail Restricted Delivery
☐ Collect on Delivery
☐ Collect on Delivery Restricted Delivery
☐ Insured Mail
☐ Insured Mail Restricted Delivery (over $500)
☐ Priority Mail Express®
☐ Registered Mail™
☐ Registered Mail Restricted Delivery
☐ Signature Confirmation™
☐ Signature Confirmation Restricted Delivery

Domestic Return Receipt

SENDER: *COMPLETE THIS SECTION*

- Complete items 1, 2, and 3.
- Print your name and address on the reverse so that we can return the card to you.
- Attach this card to the back of the mailpiece, or on the front if space permits.

1. Article Addressed to:

WILSON T A
PO BOX 178
RUSSELL SPRINGS, KY 42642

9590 9402 9112 4225 8437 20

2. Article Number *(Transfer from service label)*

9589 0710 5270 1687 9043 98

PS Form 3811, July 2020 PSN 7530-02-000-9053

COMPLETE THIS SECTION ON DELIVERY

A. Signature
X Terry Wilson ☐ Agent ☐ Addressee

B. Received by *(Printed Name)* Terry Wilson
C. Date of Delivery 8-6-25

D. Is delivery address different from item 1? ☐ Yes
If YES, enter delivery address below: ☐ No

3. Service Type
☐ Adult Signature
☐ Adult Signature Restricted Delivery
☐ Certified Mail®
☐ Certified Mail Restricted Delivery
☐ Collect on Delivery
☐ Collect on Delivery Restricted Delivery
☐ Insured Mail
☐ Insured Mail Restricted Delivery (over $500)
☐ Priority Mail Express®
☐ Registered Mail™
☐ Registered Mail Restricted Delivery
☐ Signature Confirmation™
☐ Signature Confirmation Restricted Delivery

Domestic Return Receipt

SENDER: *COMPLETE THIS SECTION*

- Complete items 1, 2, and 3.
- Print your name and address on the reverse so that we can return the card to you.
- Attach this card to the back of the mailpiece, or on the front if space permits.

1. Article Addressed to:

METZCAR ROBERT T.
& JAMES R. HANEY
1343 HARTWOOD
CINCINNATI OH 45240

9590 9402 9112 4225 8438 98

2. Article Number *(Transfer from service label)*

9589 0710 5270 1687 9043 36

PS Form 3811, July 2020 PSN 7530-02-000-9053

COMPLETE THIS SECTION ON DELIVERY

A. Signature

X Robert Metzcar

☐ Agent
☐ Addressee

B. Received by *(Printed Name)*: Robert Metzcar

C. Date of Delivery: 6-11-25

D. Is delivery address different from item 1? ☐ Yes
If YES, enter delivery address below: ☐ No

PRESORTED 45240
AUG 11 2025
USPS CINCINNATI OH

3. Service Type

☐ Adult Signature
☐ Adult Signature Restricted Delivery
☐ Certified Mail®
☐ Certified Mail Restricted Delivery
☐ Collect on Delivery
☐ Collect on Delivery Restricted Delivery
Mail
Mail Restricted Delivery
00)
☐ Priority Mail Express®
☐ Registered Mail™
☐ Registered Mail Restricted Delivery
☐ Signature Confirmation™
☐ Signature Confirmation Restricted Delivery

Domestic Return Receipt

ALERT: WINTER WEATHER IN THE OHIO VALLEY, GREAT LAKES, AND NORTHEAST REGIONS ...

USPS Tracking®

FAQs >

Remove ✕

Tracking Number:

9589071052701687904404

Copy Add to Informed Delivery (https://informeddelivery.usps.com/)

Latest Update

Your item was delivered to an individual at the address at 11:31 am on August 4, 2025 in RUSSELL SPRINGS, KY 42642.

Get More Out of USPS Tracking:

USPS Tracking Plus®

Feedback

Delivered

Delivered, Left with Individual

RUSSELL SPRINGS, KY 42642
August 4, 2025, 11:31 am

See All Tracking History

What Do USPS Tracking Statuses Mean? (https://faq.usps.com/s/article/Where-is-my-package)

Text & Email Updates

USPS Tracking Plus®

Product Information

See Less ^

Track Another Package

Enter tracking or barcode numbers

Need More Help?

Contact USPS Tracking support for further assistance.

FAQs

ALERT: WINTER WEATHER IN THE OHIO VALLEY, GREAT LAKES, AND NORTHEAST REGIONS ...

USPS Tracking®

FAQs >

Remove ✕

Tracking Number:

9589071052701687904374

Copy Add to Informed Delivery (https://informeddelivery.usps.com/)

Latest Update

Your item was delivered to an individual at the address at 11:12 am on August 4, 2025 in RUSSELL SPRINGS, KY 42642.

Get More Out of USPS Tracking:

USPS Tracking Plus®

Feedback

Delivered

Delivered, Left with Individual

RUSSELL SPRINGS, KY 42642
August 4, 2025, 11:12 am

See All Tracking History

What Do USPS Tracking Statuses Mean? (https://faq.usps.com/s/article/Where-is-my-package)

Text & Email Updates

USPS Tracking Plus®

Product Information

See Less ^

Track Another Package

Enter tracking or barcode numbers

Need More Help?

Contact USPS Tracking support for further assistance.

FAQs

ALERT: WINTER WEATHER IN THE OHIO VALLEY, GREAT LAKES, AND NORTHEAST REGIONS ...

USPS Tracking®

FAQs >

Remove ✕

Tracking Number:

9589071052701687904381

Copy Add to Informed Delivery (https://informeddelivery.usps.com/)

Latest Update

Your item was delivered to an individual at the address at 11:10 am on August 4, 2025 in RUSSELL SPRINGS, KY 42642.

Get More Out of USPS Tracking:

USPS Tracking Plus®

Feedback

Delivered

Delivered, Left with Individual

RUSSELL SPRINGS, KY 42642
August 4, 2025, 11:10 am

See All Tracking History

What Do USPS Tracking Statuses Mean? (https://faq.usps.com/s/article/Where-is-my-package)

Text & Email Updates

USPS Tracking Plus®

Product Information

See Less ^

Track Another Package

Enter tracking or barcode numbers

Need More Help?

Contact USPS Tracking support for further assistance.

FAQs

ALERT: WINTER WEATHER IN THE OHIO VALLEY, GREAT LAKES, AND NORTHEAST REGIONS ...

USPS Tracking®

FAQs >

Remove ✕

Tracking Number:

9589071052701687904367

Copy Add to Informed Delivery (https://informeddelivery.usps.com/)

Latest Update

Your item was delivered to an individual at the address at 11:14 am on August 4, 2025 in RUSSELL SPRINGS, KY 42642.

Get More Out of USPS Tracking:

USPS Tracking Plus®

Feedback

Delivered

Delivered, Left with Individual

RUSSELL SPRINGS, KY 42642
August 4, 2025, 11:14 am

See All Tracking History

What Do USPS Tracking Statuses Mean? (https://faq.usps.com/s/article/Where-is-my-package)

Text & Email Updates

USPS Tracking Plus®

Product Information

See Less ^

Track Another Package

Enter tracking or barcode numbers

Need More Help?

Contact USPS Tracking support for further assistance.

FAQs

ALERT: WINTER WEATHER IN THE OHIO VALLEY, GREAT LAKES, AND NORTHEAST REGIONS ...

USPS Tracking®

FAQs >

Remove ✕

Tracking Number:

9589071052701687904411

Copy Add to Informed Delivery (https://informeddelivery.usps.com/)

Latest Update

Your item was delivered to an individual at the address at 2:16 pm on August 4, 2025 in ROYAL OAK, MI 48073.

Get More Out of USPS Tracking:

USPS Tracking Plus®

Feedback

Delivered

Delivered, Left with Individual

ROYAL OAK, MI 48073
August 4, 2025, 2:16 pm

See All Tracking History

What Do USPS Tracking Statuses Mean? (https://faq.usps.com/s/article/Where-is-my-package)

Text & Email Updates

USPS Tracking Plus®

Product Information

See Less ^

Track Another Package

Enter tracking or barcode numbers

Need More Help?

Contact USPS Tracking support for further assistance.

FAQs

ALERT: WINTER WEATHER IN THE OHIO VALLEY, GREAT LAKES, AND NORTHEAST REGIONS ...

USPS Tracking®

FAQs >

Remove ✕

Tracking Number:

9589071052701687904329

Copy Add to Informed Delivery (https://informeddelivery.usps.com/)

Latest Update

Your item was delivered to an individual at the address at 11:14 am on August 4, 2025 in RUSSELL SPRINGS, KY 42642.

Get More Out of USPS Tracking:

USPS Tracking Plus®

Feedback

Delivered

Delivered, Left with Individual

RUSSELL SPRINGS, KY 42642
August 4, 2025, 11:14 am

See All Tracking History

What Do USPS Tracking Statuses Mean? (https://faq.usps.com/s/article/Where-is-my-package)

Text & Email Updates

USPS Tracking Plus®

Product Information

See Less ^

Track Another Package

Enter tracking or barcode numbers

Need More Help?

Contact USPS Tracking support for further assistance.

FAQs

ClarkQuinn

www.clarkquinnlaw.com

Russell L. Brown
Attorney at Law
rbrown@clarkquinnlaw.com

320 N. Meridian St., Ste. 1100
Indianapolis, IN 46204
(317) 637-1321 main
(317) 687-2344 fax

July 30, 2025

Via Certified Mail, Return Receipt Requested
9589 0710 5270 1687 9043 12

Hon. Randy Marcum
Russell County Judge Executive
410 Monument Sq. Suite 205
Jamestown, KY. 42629

RE: Notice of Proposal to Construct Wireless Communications Facility
Kentucky Public Service Commission Docket No. 2025-00252
Site Name: Lake Valley

Dear Judge Marcum:

Cellco Partnership, d/b/a Verizon Wireless and TowerCo VI, LLC are filing an application with the Kentucky Public Service Commission ("PSC") to construct a new wireless communications facility on a site located at the southeast corner of the intersection of HWY 1611 and Polson Town Road, Russell Springs, KY 42642. (North Latitude: (36° 58' 16.42", West Longitude 84° 58' 53.50"). The proposed facility will include a 255-foot tall antenna tower, plus a 5-foot lightning arrestor and related ground facilities. This facility is needed to provide improved coverage for wireless communications in the area.

You have a right to submit comments to the PSC or to request intervention in the PSC's proceedings on the application. You may contact the PSC at: Executive Director, Public Service Commission, 211 Sower Boulevard, P.O. Box 615, Frankfort, Kentucky 40602. Please refer to docket number 2025-00252 in any correspondence sent in connection with this matter.

We have attached a map showing the site location for the proposed tower. Applicant's radio frequency engineers assisted in selecting the proposed site for the facility, and they have determined it is the proper location and elevation needed to provide quality service to wireless customers in the area. Please feel free to contact us at 317-637-1321 if you have any comments or questions about this proposal.

Sincerely,
Russell L. Brown

Attorney for Applicant

RLB/mnw
Enclosure

Location Map

ClarkQuinn
lark, Quinn, Moses, Scott & Grahn, LLP

PLACE STICKER AT TOP OF ENVELOPE TO THE RIGHT
OF THE RETURN ADDRESS, FOLD AT DOTTED LINE

CERTIFIED MAIL®

9589 0710 5270 1687 9043 12

FIRST-CLASS

US POSTAGE PITNEY BOWES

ZIP 46204
02 7H
0006035028

$ 010.44⁰
JUL 30 2025

Hon. Randy Marcum
Russell County Judge Executive
410 Monument Sq. Suite 205
Jamestown, KY. 42629

SENDER: *COMPLETE THIS SECTION*

- Complete items 1, 2, and 3.
- Print your name and address on the reverse so that we can return the card to you.
- Attach this card to the back of the mailpiece, or on the front if space permits.

1. Article Addressed to:

Hon. Randy Marcum
Russell County Judge Executive
410 Monument Sq. Suite 205
Jamestown, KY. 42629

9590 9402 9112 4225 8439 11

2. Article Number *(Transfer from service label)*

9589 0710 5270 1687 9043 12

COMPLETE THIS SECTION ON DELIVERY

A. Signature

X Landace Miller

☑ Agent
☐ Addressee

B. Received by *(Printed Name)*

Landace Miller

C. Date of Delivery

8/4/25

D. Is delivery address different from item 1? ☐ Yes
If YES, enter delivery address below: ☐ No

3. Service Type

☐ Adult Signature
☐ Adult Signature Restricted Delivery
☐ Certified Mail®
☐ Certified Mail Restricted Delivery
☐ Collect on Delivery
☐ Collect on Delivery Restricted Delivery
☐ Insured Mail
☐ Insured Mail Restricted Delivery
(over $500)
☐ Priority Mail Express®
☐ Registered Mail™
☐ Registered Mail Restricted Delivery
☐ Signature Confirmation™
☐ Signature Confirmation Restricted Delivery

PS Form 3811, July 2020 PSN 7530-02-000-9053 Domestic Return Receipt

SITE NAME: LAKE VALLEY
NOTICE SIGNS

The signs are at least (2) feet by four (4) feet in size, of durable material, with the text printed in black letters at least one (1) inch in height against a white background, except for the word **"tower,"** which is at least four (4) inches in height.

Cellco Partnership, d/b/a Verizon Wireless and TowerCo VI, LLC proposes to construct a telecommunications **tower** on this site. If you have questions, please contact Clark, Quinn, Moses, Scott & Grahn, LLP, 320 N. Meridian Street, Indianapolis, IN 46204; 317-637-1321, or the Executive Director, Public Service Commission, 211 Sower Boulevard, PO Box 615, Frankfort, Kentucky 40602. Please refer to docket number 2025-00252 in your correspondence.

Cellco Partnership, d/b/a Verizon Wireless and TowerCo VI, LLC proposes to construct a telecommunications **tower** on this site. If you have questions, please contact Clark, Quinn, Moses, Scott & Grahn, LLP, 320 N. Meridian Street, Indianapolis, IN 46204; 317-637-1321, or the Executive Director, Public Service Commission, 211 Sower Boulevard, PO Box 615, Frankfort, Kentucky 40602. Please refer to docket number 2025-00252 in your correspondence.

ClarkQuinn
Clark, Quinn, Moses, Scott & Grahn, LLP

VIA EMAIL: news@russellcountynewspapers.com
print@jpinews.com

The Casey County News
720 Campbellsville Street
Liberty, KY 42539

RE: Legal Notice Advertisement
Site Name: Lake Valley

To Whom It May Concern,

Please publish the following legal notice advertisement in the next available edition of The Times Journal Publication serving Russell County, KY:

NOTICE

Cellco Partnership, d/b/a Verizon Wireless and TowerCo VI, LLC are filing an application with the Kentucky Public Service Commission ("PSC") to construct a new wireless communications facility on a site located at the southeast corner of the intersection of HWY 1611 and Polson Town Road, Russell Springs, KY 42642. (North Latitude: (36° 58' 16.42", West Longitude 84° 58' 53.50"). The proposed facility will include a 255-foot tall antenna tower, plus a 5-foot lightning arrestor and related ground facilities. Site name is Lake Valley. You have a right to submit comments to the PSC or to request intervention in the PSC's proceedings on the application. You may contact the PSC at: Executive Director, Public Service Commission, 211 Sower Boulevard, P.O. Box 615, Frankfort, Kentucky 40602. Please refer to docket number 2025-00252 in any correspondence sent in connection with this matter.

After this advertisement has been published, please forward a tearsheet copy, affidavit of publication, and invoice to Clark, Quinn, Moses, Scott & Grahn, LLC, 320 N. Meridian Street, Indianapolis, IN 46204 or by email to ebw@clarkquinnlaw.com. Please call me on my cell with any questions at 317-902-2187 if you have any questions. Thank you for your assistance.

Sincerely,

Elizabeth Bentz Williams, AICP

CK Lake Valley

- Macro NB to increase capacity in the aera and improve service at Wolf Creek Marina and on Lake Cumberland.

SARF	
ATOLL Market :	LOUISVILLE
SR Name :	CK Wolf River Dock
Granite Locale :	INDIANA
Address :	5266 WOLF RIVER DOCK
City :	ALBANY
State :	KENTUCKY
County :	Clinton
Zipcode :	42602
Latitude :	36.6362221
Longitude :	-85.1919271
Radius :	1.0
Centerline(ft.) :	250.0
Sectors :	3

Existing towers in the SARF:
No known

SITE CANDIDATE INFORMATION PKG

Search Ring Number: KY0118
Search Ring Name: CK Lake Velley
Candidate Name: Polston

5000 Valleystone Dr
Cary, NC 27519
919-469-5559

Vicinity Map

(NOT DRAWN TO SCALE)

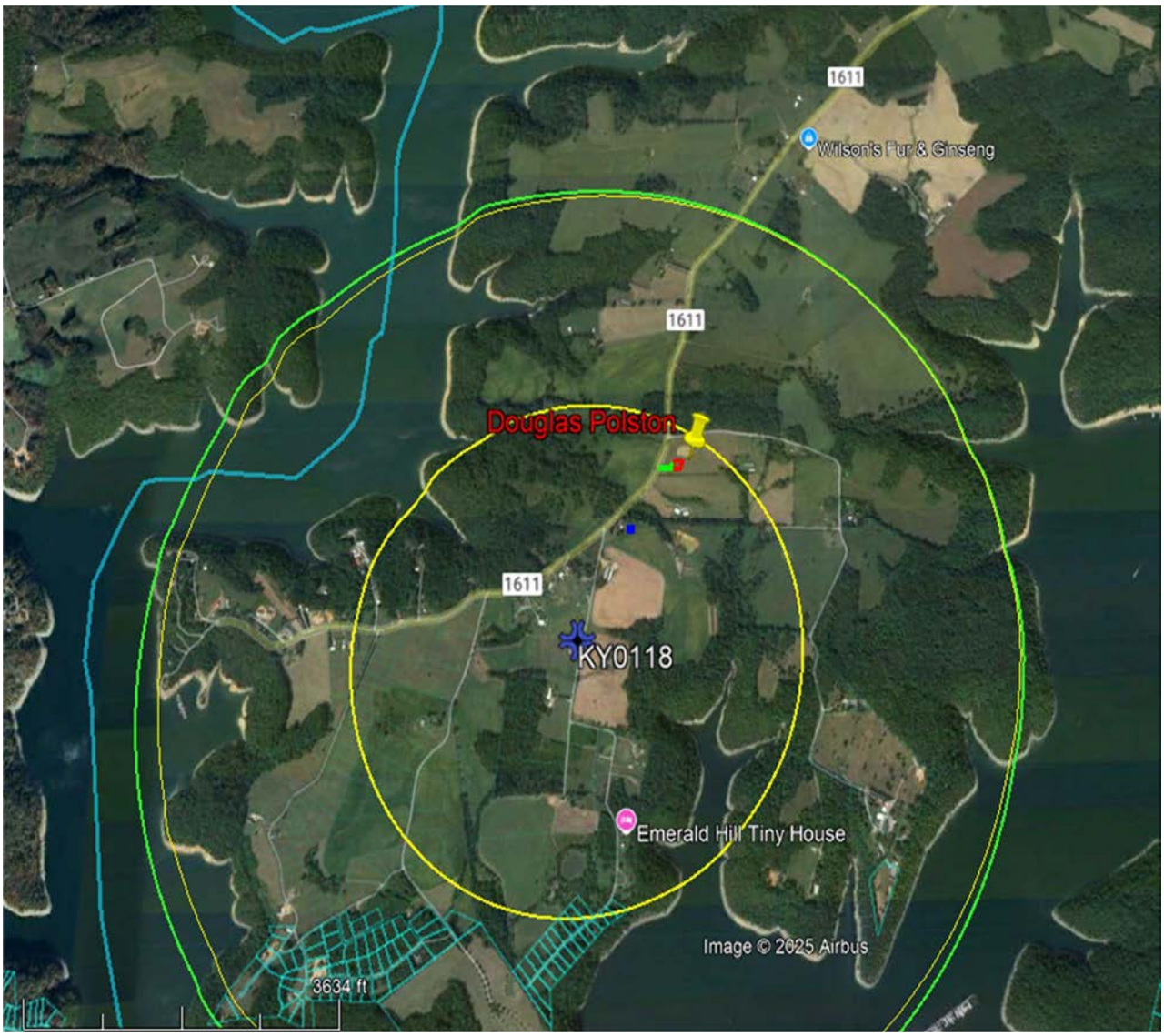

September 26th, 2025

Re: Radiofrequency Justification for Proposed Wireless Communications Facility for Cellco Partnership d/b/a Verizon Wireless ("Verizon")

Tower Developer and Owner: TowerCo VI Holdings, LLC
Facility Site Name: CK Lake Valley
Type of Tower: Self Support (Lattice) Tower
Tower Height: 255 ft.
Location: 235 Polstontown Rd, Russell Springs, KY 42642

To Whom It May Concern:

As a radio frequency engineer for Verizon am providing this letter to state the need for a proposed Verizon wireless communications site called "CK Lake Valley".

The CK Lake Valley site is proposed to meet the following objectives:

1. To offload excess traffic from existing Verizon sites in this area that are operating at or near capacity.
2. To improve service in Russell Springs and the nearby marinas on Lake Cumberland.

Currently Verizon customers are experiencing poor service in Russell Springs near Lake Cumberland and the immediately surrounding area ("Gap Area") because there is a high demand for wireless service and high-speed data there and Verizon's network cannot keep up with that demand. Simply put, Verizon's existing communications sites in and around the Gap Area are over capacity and therefore they cannot sufficiently handle the traffic. The new proposed tower is needed to offload this excess traffic so that Verizon can provide critical service improvements to its customers in the area, including first responders, residents, and businesses.

When Verizon identifies the need for a new site in an area, its design engineers establish search area criteria in order to effectively meet specific coverage objectives as well as offload existing Verizon cell sites that can no longer meet service demands. These criteria are used to identify a "Search Area" in which the new tower would need to be located to meet the coverage and capacity objectives. The proposed tower is also designed to provide a single solution that decreases the chances that a second tower will be needed in the immediate area in the near future. Each wireless communications site covers a limited area, depending on site configuration and the surrounding terrain. Cell sites are built in an interconnected network, which means each cell site must be located so that their respective coverage areas are contiguous. This provides uninterrupted service throughout the coverage area.

Verizon cares about the communities it serves and prefers to collocate on existing structures when feasible. Collocation typically involves lower construction costs, faster deployment, and environment protection. For these reasons, Verizon makes every effort to investigate the feasibility for using existing towers or other tall structures for collocation when designing a new site or system expansion. However, collocation on an existing tower or tall structure is not always feasible due to location of existing cell sites. Cell sites are placed in a way so they provide smooth hand off to each other and are placed at some distance from each other to eliminate too much overlap. Too much overlap may result in a waste of resources or raise a system capacity overload concern.

Here, Verizon is currently collocated on several existing towers in the areas surrounding the Search Area. However, there are no existing structures within the Search Area on which Verizon could collocate to meet its coverage and capacity objectives in the Gap Area. For this reason, Verizon worked with TowerCo VI Holdings to identify a site in the Search Area on which a new tower could be built that would meet the stated objectives. The proposed new tower, located at 235 Polstontown Rd, Russell Springs, KY 42642, will be built near the center of the Search Area. Both the proposed location and height of the tower are designed to meet the stated objectives with a single tower. Specifically, the tower will have an overall tower height of 255' with Verizon's equipment installed at a centerline of 250'. This centerline is the minimum height necessary to allow Verizon to be able to adequately cover the Gap Area and to offload traffic from the nearby existing Verizon sites that are currently overloaded. If Verizon is limited to installing its equipment at a centerline that is lower than the proposed height, another tower would be needed in the vicinity in the near future in order to provide the additional coverage and capacity offload that is needed in the Gap Area.

If TowerCo VI Holdings is unable to build the proposed site and therefore Verizon is unable to collocate its equipment on it at a centerline of 250', Verizon will be prohibited from serving its customers in the Gap Area.

This cell site has been designed, and shall be constructed and operated, in a manner that satisfies regulations and requirements of all applicable governmental agencies that have been charged with regulating tower specifications, operation, construction, and placement, including the FAA and FCC.

Sincerely,

Steven Belcher
Sr. RF Engineer
Verizon Wireless

September 26th, 2025

RE: Zoning Plots

Site Name: CK Lake Valley

To Whom It May Concern:

This map is not a guarantee of coverage and may contain areas with no service. This map reflects a depiction of predicted and approximate wireless coverage of the network and is intended to provide a relative comparison of coverage. The depictions of coverage do not guarantee service availability as there are many factors that can influence coverage and service availability. These factors vary from location to location and change over time. The coverage areas may include locations with limited or no coverage. Even within a coverage area shown, there are many factors, including but not limited to, usage volumes, outages, customer's equipment, terrain, proximity to buildings, foliage, and weather that may impact service.

Sincerely,

Steven Belcher
Sr RF Engineer
Verizon Wireless

verizon

Current Coverage – Without Proposed Site CK Lake Valley

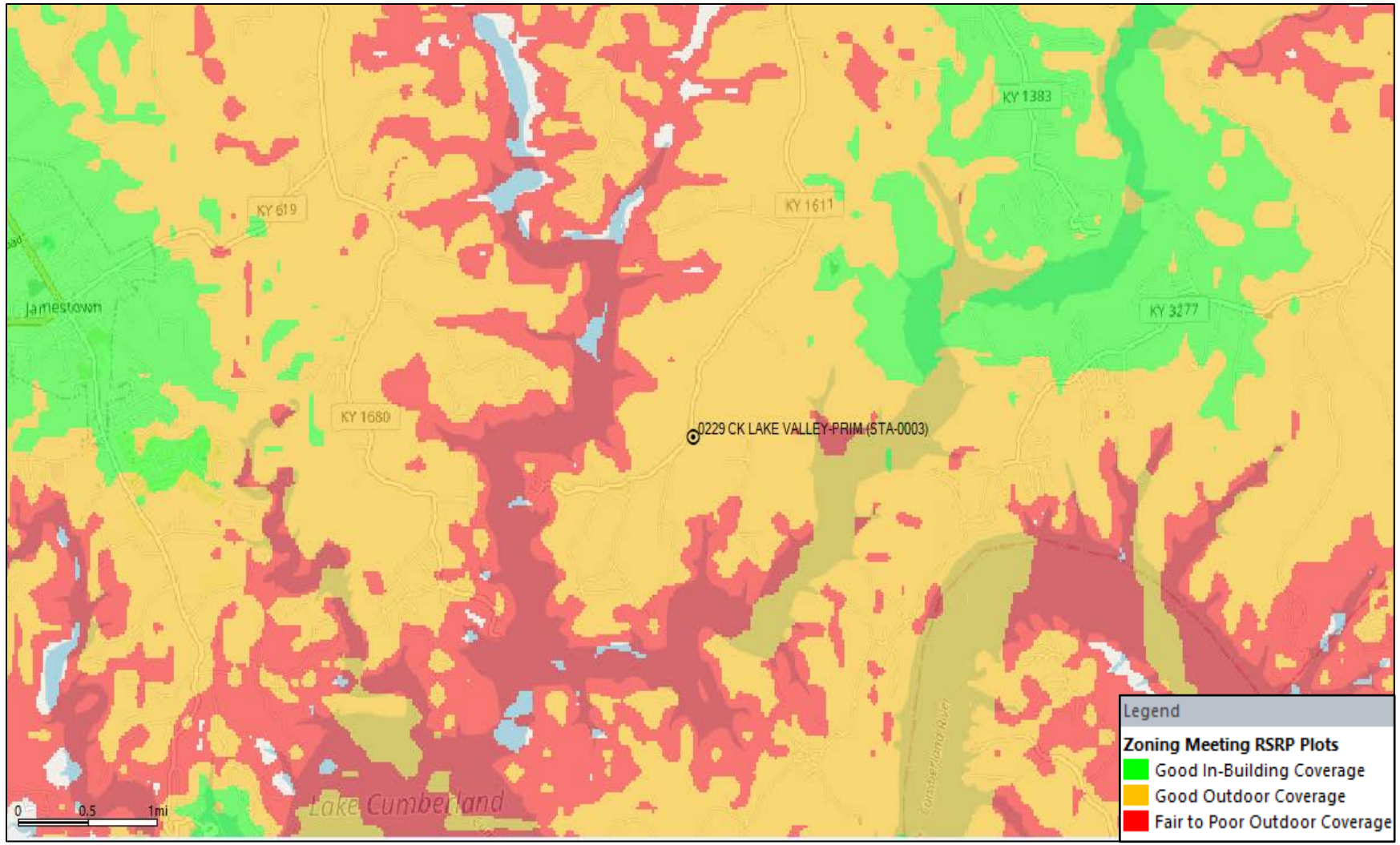

verizon

Proposed Coverage – With Proposed Site CK Lake Valley

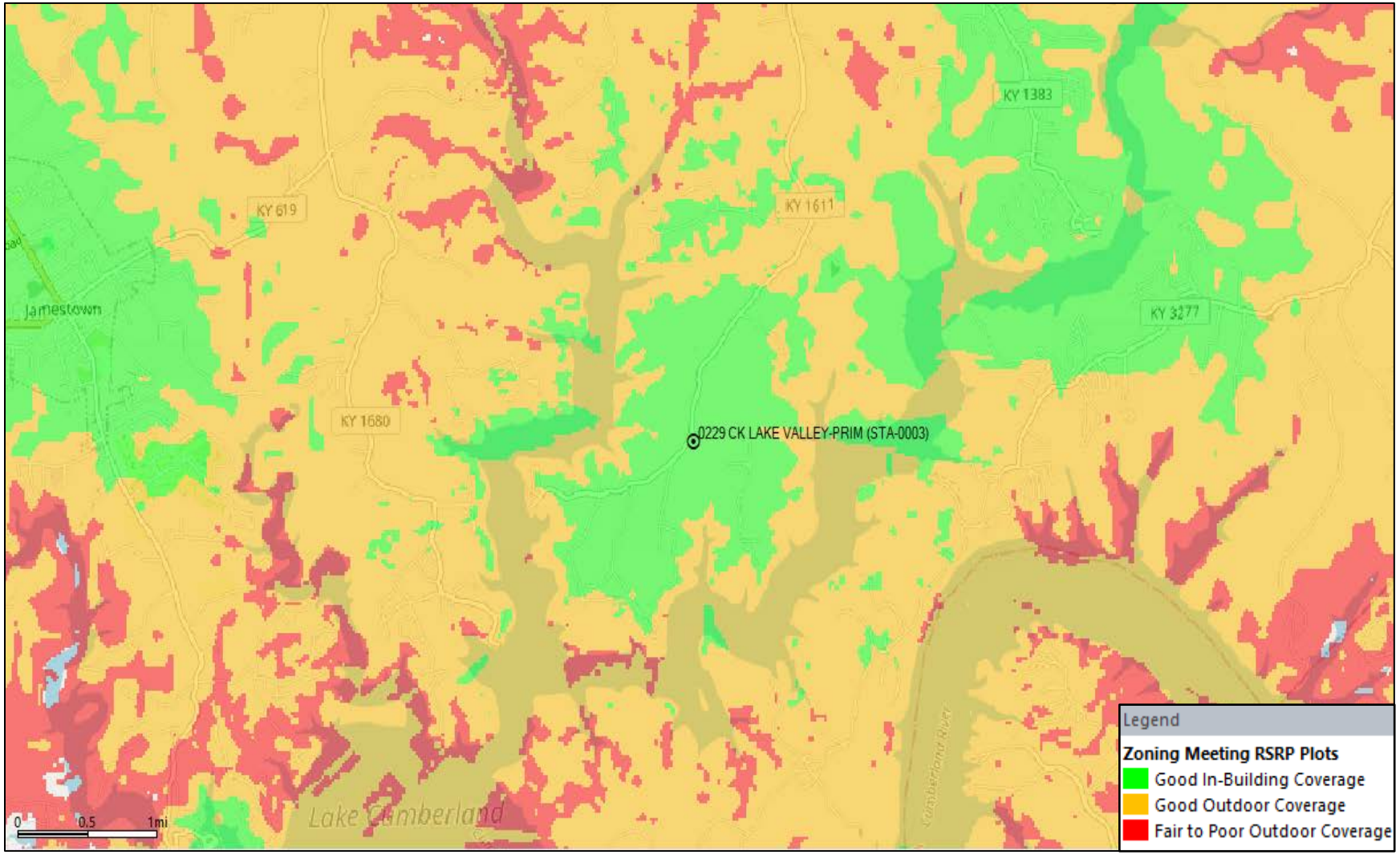

Exhibit S
List and Identity and Qualifications of Professionals

Stephen E. Hunt
Professional Engineer
Kentucky License 25003
TeleCad Wireless
1961 Northpoint Blvd. Suite 130
Hixson, TX, 37343

Travis L. Sheilds
Professional Land Surveyor
Kentucky License 4246
The Land Consultants, LLC
5449 Highway 41
Jasper, TN 37347

Keith J. Tindall
Professional Engineer
Kentucky License 20697
Sabre Industries
7101 Southbridge Drive
P.O. Box 658
Sioux City, IA 51102-0658

Raphael Mohamed
Professional Engineer
Kentucky License 24429
Engineered Tower Solutions, PLLC
3227 Wellington Ct.
Raleigh, NC 27615

Steven Belcher
Sr. RF Engineer
Verizon Wireless
2421 Holloway Road
Louisville, KY 40299

Evan Lowe
Construction Manager – East
TowerCo 2013, LLC
5000 Valleystone Dr
Cary, NC 27519

STATE OF INDIANA)
) SS:
COUNTY OF MARION)

AFFIDAVIT OF CERTIFICATION
COMMONWEALTH OF KENTUCKY
PUBLIC SERVICE COMMISSION

I, Russell L. Brown, attorney for Cellco Partnership d/b/a Verizon Wireless and TowerCo 2013, LLC hereby certify that as the person supervising the preparation of this application and all statements and information contained herein are true and accurate to the best of that person's knowledge, information, and belief formed after a reasonable inquiry for all information within this application.

Russell L. Brown
Attorney, for Cellco Partnership, d/b/a Verizon Wireless and TowerCo 2013, LLC

STATE OF INDIANA)
) SS:
COUNTY OF MARION)

Subscribed and sworn to before me this 15th day of January 2026.

Notary Public
Printed Name of Notary: Joseph M. Csikos
My Commission Expires: August 5, 2033
My County of Residence: Johnson
Commission No. NP0765036

NOTARY PUBLIC SEAL INDIANA
JOSEPH M CSIKOS
Notary Public, State of Indiana
Johnson County
Commission Number NP0765036
My Commission Expires
August 05, 2033