COMMONWEALTH OF KENTUCKY

BEFORE THE PUBLIC SERVICE COMMISSION

In the Matter of:

ELECTRONIC APPLICATION OF NORTHERN KENTUCKY WATER DISTRICT FOR A CERTIFICATE OF PUBLIC CONVENIENCE AND NECESSITY FOR THE CONSTRUCTION OF SUB DISTRICT O WATER MAIN EXTENSION, FINANCING AND SURCHARGE	)))))	**CASE NO. 2025-00243**

APPLICATION

Northern Kentucky Water District ("NKWD" or "District"), by and through counsel, petitions the Commission for an order authorizing for a Certificate of Public Convenience and Necessity for the construction of Sub District O water main extension **before the bids expire on October 1, 2025** pursuant to KRS 278.020 and approval of financing pursuant to KRS 278.300. In support of this Application, NKWD states as follows:

GENERAL INFORMATION

1. NKWD states pursuant to **807 KAR 5:001(14)** that its office address is 2835 Crescent Springs Road, Erlanger, Kentucky 41018-0640. Its principal officers are listed in its current Annual Report, which is filed with the Commission as are its prior years Reports.

2. Pursuant to **807 KAR 5:001(14)**, NKWD states it is a non-profit water district organized under Chapter 74 and has no separate articles of incorporation; its web page is www.nkywater.org. Its contact officers and employees are:

Stacey Kampsen Vice President of Finance and Support Services 2835 Crescent Spring Road P.O. Box 18640 Erlanger, Kentucky 41018 Phone: (859) 578 9898 Fax: (859) 578-3668	Tom Edge General Counsel and Director of Compliance, Communications and Regulatory Affairs 2835 Crescent Spring Road P.O. Box 18640 Erlanger, Kentucky 41018 Phone: (859) 578 5457

Email: skampsen@nkywater.org	Fax: (859) 578-3668 Email: tedge@nkywater.org

3. A description of NKWD's water system and its property stated at original cost by accounts is contained in its Annual Report, which is incorporated by reference.

4. NKWD serves retail customers in Kenton, Boone and Campbell Counties and sells water at wholesale to non-affiliated water distribution systems in Kenton, Boone, Pendleton and Campbell Counties.

5. NKWD proposes constructing a water main extension as described in Exhibit A.

6. The Sub District O water main extension is necessary to provide service to unserved properties in unincorporated areas of Kenton County and to maintain quality water service to the general area of Kenton County. NKWD seeks an order allowing the formation of the sub district associated with the construction proposed in this Application.

a. The purpose of the sub district is to aggregate sufficient customers to make the extension of facilities to the residents of the affected areas feasible. While there are limited areas in NKWD's service area that are unserved, those areas are widely separated and sparsely populated. The estimated 462 households in Kenton County without access to a potable water distribution system are widely dispersed. By combining the proposed areas into Sub District O, NKWD is able to provide water service to higher density unserved areas which helps spread the cost among sufficient customers to make the project financially feasible for NKWD and affordable for the residents in those areas. This is the same methodology and application format that NKWD has used for other sub district projects.[1]

---

[1] See e.g., *Electronic Application of Northern Kentucky Water District for a Certificate of Public Convenience and Necessity for the Construction of Sub District HB Water Main Extension, Financing and Surcharge*, Case No. 2024-00304; *Application of Northern Kentucky Water District for a Certificate of Convenience and Necessity, Financing, Surcharge, and Creation of Sub District M Pursuant to KRS 278.023*, Case No. 2014-00150; *Application of Northern Kentucky Water District for a Certificate of Convenience and Necessity for the Construction of Sub District I Water Main Extension, Financing and Surcharge*, Case No. 2012-00583; *Application of Northern Kentucky Water District for a Certificate of Convenience and Necessity for the Construction of Sub District H Water Main Extensions, Financing and Surcharge*, Case No. 2010-00434;

b. NKWD has always used household density as one of the primary criterion for the establishment of a sub district. See Exhibit I. In order to maximize the number of customers served with the limited dollars available from all funding sources, NKWD determines where the highest number of households per mile can be feasibly served and where interest levels are highest. The cost per mile of any extension dictates that NKWD maximize the number of customers served along each extension. Because of the limited resources available to extend service, NKWD attempts to get the most value from each dollar spent.

c. To standardize the sub district process, NKWD formulated a tariff that specifies the criteria for establishing a sub district:

SECTION XIV-D – DISTRIBUTION MAIN EXTENSION POLICY FOR DISTRIBUTION SUBDISTRICTS

1. Pursuant to 807 KAR 5:066, when the District determines that the cost of a main extension using any other main extension tariff creates an unreasonable financial hardship on potential customers or that an alternative extension method will benefit the public interest by allowing the extension of water facilities into unserved areas that would otherwise be uneconomical to serve or would benefit the District, the District may use a subdistrict and rate surcharge as an alternative to other extension procedures.
2. The use of a subdistrict, including the imposition of a rate surcharge for the customers within the subdistrict, is subject to the following criteria:
   a. There must be a demand for the extension of the service sufficient to make the extension hydraulically and financially feasible as determined by the District.
   b. There must be funds available to the District from third party sources, such as governmental loans and grants, customer contributions or other non-rate based revenue to supplement the District's financial contribution to the extension to make the extension financially feasible in the discretion of the District.
   c. The demand for service must be within an area or areas in which the potential customers share common geographic characteristics or can be served through common utility plant and facilities. The area of the proposed subdistrict may include non-contiguous locations of potential customers.
   d. Common geographic characteristics include but are not limited to greater customer population density when compared to other unserved areas within the District's service area. In areas where customer density may be lower than other potentially served areas, factors such as location of customers along the route needed to connect higher density areas, hydraulic improvements to the District's system, geotechnical factors, location of existing distribution facilities, adequate customer participation in the project, financial contributions by a customer or group of customers to fund the extension, availability of sewer service in an area or other similar factors may be used by the District in assessing the feasibility of the subdistrict.

Application of Northern Kentucky Water District for a Certificate of Convenience and Necessity for the Construction of Sub District G Water Main Extensions, Financing and Surcharge, Case No. 2007-00131; *Application of Northern Kentucky Water District for a Certificate of Convenience and Necessity for the Construction of Subdistrict F Water Main Extensions, Financing and Surcharge*, Case No. 2006-00315.

d. As the application and exhibits herein establish, all criteria have been met.

7. The construction is in the public interest and is required to allow NKWD to continue to provide adequate service to customers within its jurisdiction.

a. The areas included in Sub District O are all rural, remote from existing water distribution facilities and have no access to potable water other than cisterns and wells. Given the need to develop financially and technically feasible projects, location of these residents, the distance between the properties, the sparse number of residents in the affected areas and the demand for safe, affordable, piped water supplies, all of the residents of the proposed sub district are in a similar situation as to geographic characteristics, water supply inadequacy, and need for affordable service. This project will extend 8-inch water mains to make public water available to 61 residences in rural areas that currently have no access to public water supply:

i. Approximately 367 feet of 8" ductile iron water main along Highwater Road (from River Heights Lane to #1873);

ii. Approximately 1,527 feet of 8" PVC water main along Scenic Ridge Drive;

iii. Approximately 464 feet of 8" ductile iron water main along Decoursey Pike (from Ryland Lakes Drive to Steep Creek Road);

iv. Approximately 5,370 feet of 8" ductile iron water main along Steep Creek Road (from Decoursey Pike to #3704 at the bridge);

v. Approximately 591 feet of 8" ductile iron water main along Mann Road (from Steep Creek Road to #11290);

vi. Approximately 1,264 feet of 8" ductile iron and PVC water main along Gene Street;

vii. Approximately 4,197 feet of 8" ductile iron water main along Fiskburg Road (Goshorn Road to Alexander Road);

viii. Approximately 2,634 feet of 8" ductile iron and PVC water main along Alexander Road (Fiskburg Road to St. Marys Road); and

ix. Approximately 4,883 feet of 8" ductile iron and PVC water main along Elliot Road (from KY 17 to the Pendleton County Line).

b. These areas were chosen based on population density and interest level. The estimated cost of the total project is $4,826,785.00. All areas included in the project have similar characteristics of rural location, sparse population density, lack of potable water supply and inability to connect to a water distribution system without the extension of these water lines.

c. The funds obtained in a number of prior sub districts were predicated on the economic status of the affected areas' residents. The funds in this case are not so encumbered. There is no low/moderate income requirements for the financing of this project, therefore, income levels are not a factor in the selection of geographic areas. There is no low/moderate income funding associated with this project. No customers or areas have been designated a part of this sub district based on income criteria.

8. The proposed construction project identified in Exhibit A is scheduled to begin construction upon PSC approval and beginning in October 2025 and completed in June 2026. Board approval of the final bids for the project is included in Exhibit C. The bids were opened July 3, 2025 and are subject to acceptance for 90 days. **The bids will expire October 1, 2025.**

9. The project, its cost, need and other details are contained in Exhibits A -1 through A-7.

10. NKWD has received approvals from the DOW for the Plans and Specifications and funding for these improvements. See Exhibit B.

11. A copy of the Bid Tabulation for this project, along with the Engineer's Recommendation of Award and minutes of NKWD's Board of Commissioner's meeting approving the award are contained in Exhibit C-1 through C-3.

12. The project finance information including: (i) customers added and revenue effect; (ii) debt issuance and source of debt; (iii) USoA Accounts; (iv) additional costs for operating and maintenance; and (v) depreciation costs and debt service after construction is contained in Exhibit D.

13. Information on NKWD's Mortgages, Bonds, Notes and Other Indebtedness is included in Exhibit E.

14. NKWD's Financial Statements are included as Exhibit F and an Affidavit for this Application is included as Exhibit J.

15. Only an additional surcharge for the customers being added upon approval and construction of the proposed Sub District is being proposed. See Exhibit G and H. No other rate adjustment is being proposed as part of this Application.

16. The following information is provided pursuant to **807 KAR 5:001(15)(2)**:

a. Specifications and descriptions are in Exhibit A. The construction is in the public interest and is required to allow NKWD to continue to provide adequate service to its customers. Facts relied on to justify the public need are included in the project descriptions in Exhibit A-1 through A-6.

b. No new franchises are required. Copies of permits from the proper public authority for the proposed construction are in Exhibit B.

c. A full description of the proposed location and route of the proposed construction including a description of the manner of the construction and related information is in Exhibit A-1 through A-6. The project will not compete against any other public utility in the area.

d. A Project Map is included as Exhibit A-1.

e. The project will be funded using the following sources:

Cleaner Water Program Grant #21CWW285	$1,100,000.00

Kenton County Fiscal Court Contribution	$2,400,000.00
Sub District O Surcharge	$297,000.00
NKWD Contribution	$1,029,785.00
TOTAL PROJECT FUNDING:	$4,826,785.00

The Sub District O Surcharge portion of the project funding will be advanced by NKWD and collected as a monthly surcharge of $30.00 on the customer's water bill over 25 years and assumes 33 of the 61 potential customers will sign up which is based on the 33 property owners that have already submitted applications and tap fees. These 33 property owners completed this action at NKWD's invitation and with an understanding that the surcharge would be required. Funding will cover costs including construction cost, engineering, and contingencies. A summary of the project costs is provided below:

Engineering	$468,036.00
Contractor's Bid	$4,134,880.65
Misc. & Contingencies	$223,868.35
TOTAL PROJECT COST:	$4,826,785.00

Project financial information is further outlined Exhibit D.

17. Pursuant to **807 KAR 5:001(12)(1)**, Financial operations information for the twelve-month period not less than 90 days prior is attached hereto in Exhibit F.

18. The following information is provided pursuant to **807 KAR 5:001(12)(2)**:

a. No stock is authorized.

b. No stock is issued.

c. There are no stock preferences.

d. Mortgages are listed in Exhibit E.

e. Bonds are listed in Exhibit E.

f. Notes are listed in Exhibit E.

g. Other indebtedness is listed in Exhibit E.

h. No dividends have been paid.

i. Current balance sheet and income statement are attached as Exhibit F.

19. Pursuant to **KRS 322.340**, Engineering plans, specifications, drawings, plats and reports for the proposed construction or extension prepared by a registered engineer are signed, sealed and dated by an engineer registered in Kentucky are included as Exhibit A.

20. The following information is provided as required by **807 KAR 5:001(18)(1)**:

a. The information required by **807 KAR 5:001(14)** is contained within this Petition generally and within paragraphs 1-4 specifically as if fully rewritten herein;

b. A general description of the property is contained in the NKWD Annual Report filed with the Public Service Commission and is incorporated herein. The Annual Report and attached financial information in Exhibit F are the latest available from NKWD.

No stock or bonds are to be issued as part of this case. Project financial information is included as Exhibit D.

c. The funds will be used to construct the project described in Exhibit A.

d. A detailed description of property to be acquired, constructed, improved or extended is included in Exhibit A and Exhibit B.

e. There is no refunding or refinancing proposed herein.

f. The state debt officer has not been notified pursuant to 807 KAR 5:001(18)(1)(g) because no permanent debt is being issued.

21. The following exhibits are provided pursuant to **807 KAR 5:001(18)(2)**:

a. Financial Exhibits, pursuant to **807 KAR 5:001(12)**, are included as Exhibit F.

b. There are no trust deeds. All notes, mortgages and other forms of indebtedness are

included as Exhibit E.

c. Maps and plans of property constructed or acquired are listed in Exhibit A.

22. Pursuant to **KRS 278.300**, this Application is made under oath through an Affidavit located in Exhibit J.

23. A copy of the customer notice to be advertised simultaneously with this filing is attached as Exhibit G.

24. Proposed tariff sheets setting forth Sub District O are attached hereto as Exhibit H.

25. To the extent that the Commission determines 807 KAR 5:001, Section 16 is applicable, NKWD requests a deviation from its requirements pursuant to 807 KAR 5:001, Section 22. NKWD has good cause for the deviation as bids could reasonably be held open only for 90 days and NKWD has historically conducted sub district creation cases without application of 807 KAR 5:001, Section 16. See e.g., *Electronic Application of Northern Kentucky Water District for a Certificate of Public Convenience and Necessity for the Construction of Sub District HB Water Main Extension, Financing and Surcharge*, Case No. 2024-00304; *Application of Northern Kentucky Water District for a Certificate of Convenience and Necessity, Financing, Surcharge, and Creation of Sub District M Pursuant to KRS 278.023*, Case No. 2014-00150; *Application of Northern Kentucky Water District for a Certificate of Convenience and Necessity for the Construction of Sub District I Water Main Extension, Financing and Surcharge*, Case No. 2012-00583; *Application of Northern Kentucky Water District for a Certificate of Convenience and Necessity for the Construction of Sub District H Water Main Extensions, Financing and Surcharge*, Case No. 2010-00434; *Application of Northern Kentucky Water District for a Certificate of Convenience and Necessity for the Construction of Sub District G Water Main Extensions, Financing and Surcharge*, Case No. 2007-00131; *Application of Northern Kentucky Water District for a Certificate of Convenience and Necessity for the Construction of Subdistrict F Water Main Extensions, Financing and Surcharge*, Case No. 2006-00315. Moreover, NKWD will conduct public notice of the new sub district and the proposed rate as depicted in Exhibit G and has previously notified all potential sub district customers that they would be subject to a sub district surcharge if the

water main extensions were completed.

For these reasons, NKWD requests issuance of an order granting authority to construct and finance the facilities, issue and collect a surcharge for Sub District O and for any other authorizations that may be necessary.

RESPECTFULLY SUBMITTED:

Tom Edge, Esq. (KBA #95534)
General Counsel
Cassandra Zoda, Esq. (KBA #96871)
Contracts, Claims and Procurement Coordinator
Northern Kentucky Water District
2835 Crescent Springs Rd.
Erlanger, KY 41018
Phone - 859-578-5457
Fax - 859-426-2770
Email: tedge@nkywater.org
czoda@nkywater.org
Counsel for Northern Kentucky Water District

CERTIFICATE OF SERVICE

In accordance with 807 KAR 5:001, Section 8, I certify that this document was submitted electronically to the Public Service Commission on July 23, 2025 and that there are currently no parties that the Public Service Commission has excused from participation by electronic means in this proceeding.

_____

Tom Edge, Esq. (KBA #95534)

EXHIBIT LIST

TABLE OF CONTENTS

EXHIBIT A ENGINEERING REPORTS AND INFORMATION

(1) Project Description And Map
(2) Engineer's Opinion of Probable Total Construction Costs
(3) System Hydraulic Model
(4) Plans
(5) Specifications

EXHIBIT B APPROVALS AND PERMITS (Franchises, Plan Review and Permit Status, Easements, Right-of-Ways, Construction Start and In-Service Date, Plant Retirements)

EXHIBIT C BID INFORMATION AND BOARD APPROVAL

(1) Bid Tabulation
(2) Engineer's Recommendation of Award
(3) Board Meeting Minutes

EXHIBIT D PROJECT FINANCE INFORMATION

EXHIBIT E MORTAGES, BONDS, NOTES AND OTHER INDEBTEDNESS

EXHIBIT F FINANCIAL STATEMENTS (Balance Sheet and Income Statement)

EXHIBIT G CUSTOMER NOTICE

EXHIBIT H PROPOSED TARIFF

EXHIBIT I STREET DENSITY TABLE

EXHIBIT J AFFIDAVIT

EXHIBIT A

ENGINEERING REPORTS AND INFORMATION

EXHIBIT A-1

PROJECT DESCRIPTION AND MAP

Subdistrict O Water Main Extension
Project 184-0927

Project Description:

The proposed project consists of 21,297 LF of water main extensions in the following areas of Kenton County, Kentucky:

- Approximately 367 feet of 8" ductile iron water main along Highwater Road (from River Heights Lane to #1873)
- Approximately 1,527 feet of 8" PVC water main along Scenic Ridge Drive
- Approximately 464 feet of 8" ductile iron water main along Decoursey Pike (from Ryland Lakes Drive to Steep Creek Road)
- Approximately 5,370 feet of 8" ductile iron water main along Steep Creek Road (from Decoursey Pike to #3704 at the bridge)
- Approximately 591 feet of 8" ductile iron water main along Mann Road (from Steep Creek Road to #11290)
- Approximately 1,264 feet of 8" ductile iron and PVC water main along Gene Street
- Approximately 4,197 feet of 8" ductile iron water main along Fiskburg Road (Goshorn Road to Alexander Road)
- Approximately 2,634 feet of 8" ductile iron and PVC water main along Alexander Road (Fiskburg Road to St. Marys Road)
- Approximately 4,883 feet of 8" ductile iron and PVC water main along Elliot Road (from KY 17 to the Pendleton County Line)

This project will extend water mains to make public water available to 61 residences in areas that currently have no access to public water supply. These areas were chosen based on population density and interest. The cost of the total project is $4,836,785.00. There are no low/ moderate income requirements for the financing of this project, therefore, income levels are not a factor in the selection of geographic areas. All areas included in the project have similar characteristics of rural location, sparse population density, lack of potable water supply and inability to connect to a water distribution system without the extension of these water lines.

Street Name	Potential Customers	Total Signups	% Signups
Highwater Road	1	1	100%
Scenic Ridge Drive	6	6	100%
Decoursey Pike	0	N/A	N/A
Steep Creek Road	9	4	44.4%
Mann Road	4	3	75.0%
Gene Street	7	4	57.1%
Fiskburg Road	8	5	62.5%
Alexander Road	11	4	36.4%
Elliot Road	15	6	40.0%
Totals	**61**	**33**	**54.1%**

Bids for this project were opened on July 3rd, 2025 and are subject to acceptance for 90 days. Therefore, the bids will expire on October 1st, 2025.

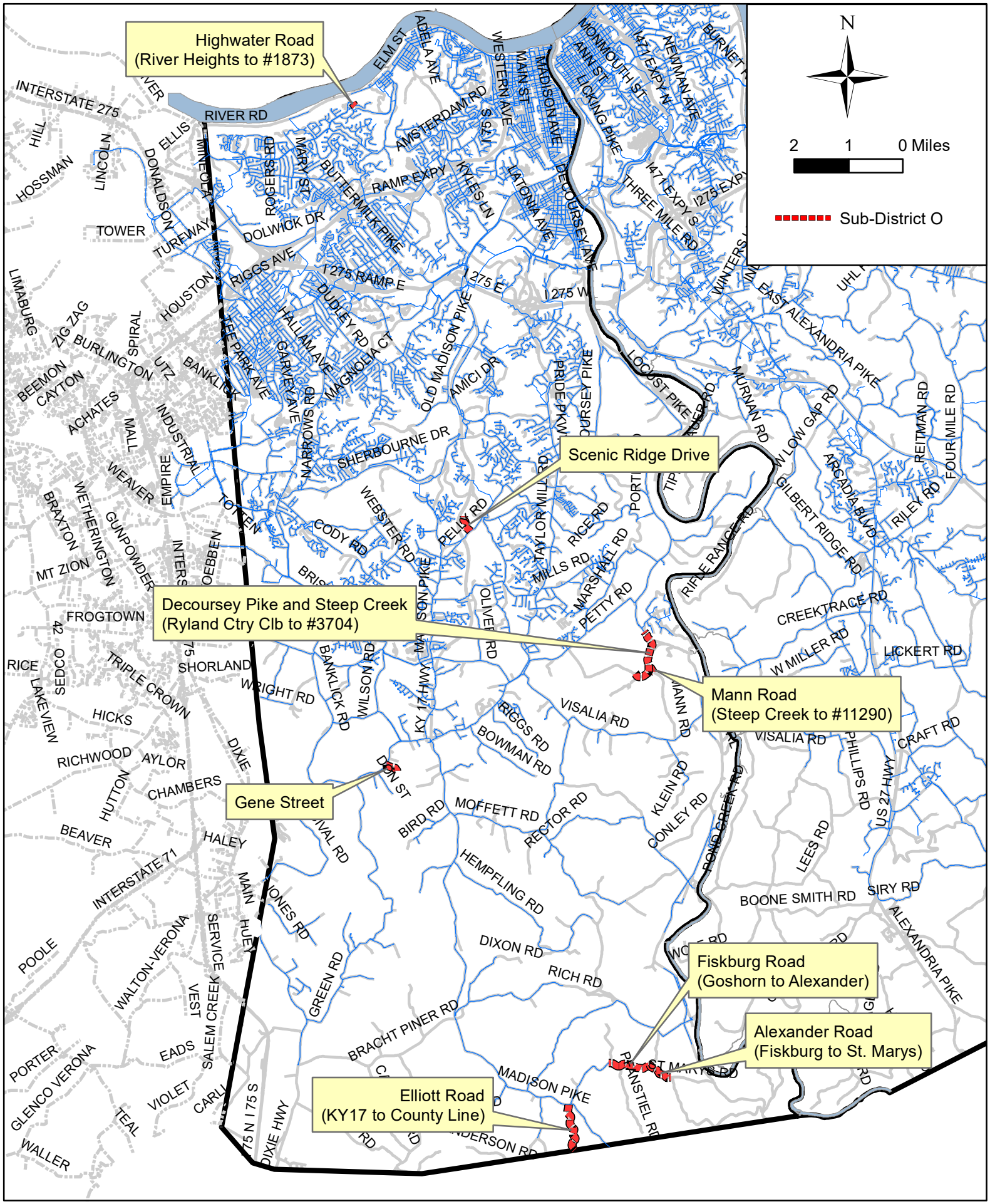

Sub-District O Water Main Extension

EXHIBIT A-2

ENGINEER'S OPINION OF PROBABLE TOTAL CONSTRUCTION COSTS

Sub-District O Water Main Extension Project

Corridor	Engineer's Cost Opinion	LF
Highwayter Road	$158,972.00	367
Scenic Ridge Drive	$513,095.00	1526
Decoursey Pike	$90,684.00	464
Steep Creek Road	$1,247,950.00	5370
Mann Road	$172,920.00	591
Gene Street	$325,336.00	1264
Fiskburg Road	$982,495.80	4197
Alexander Road	$835,796.50	2634
Elliot Road	$1,585,600.50	4883
Total =	**$5,912,849.80**	**21,296**

NKWD SUBDISTRICT 'O' - HIGHWATER ROAD WATER MAIN EXTENSION

Final Review 04-15-2025

Item No.	Description	Unit of Measure	Estimated Quantity	Unit Cost Total	Total Cost
1	6.01 CLASS 52 DUCTILE IRON PIPE (8"). (Detail 103, 103a, 104, 104a, 110)	LF	367	$160.00	$58,720.00
2	7.01 CONNECT TO EXISTING MAIN/TIE-IN (8")	EA	1	$5,000.00	$5,000.00
3	8.01 INSTALL FIRE HYDRANT ASSEMBLY	EA	1	$8,000.00	$8,000.00
4	9.01 DUCTILE IRON RESILIENT SEATED GATE VALVE (8")	EA	2	$2,800.00	$5,600.00
5	10.05 INSTALL WATER METER SETTING (Service line materials provided by NKWD)	EA	1	$3,000.00	$3,000.00
6	11.04 PLUG AND BLOCK (8")	EA	1	$600.00	$600.00
7	11.06 8"x8"x6" ANCHORING TEE AND BLOCK	EA	1	$1,000.00	$1,000.00
8	12.05 1-1/2" ASPHALTIC CONCRETE MILLING AND PAVING	SY	460	$60.00	$27,600.00
9	12.06 ASPHALTIC CONCRETE - TRENCH RESTORATION	SY	165	$200.00	$33,000.00
10	12.14 BEST MANAGEMENT PRACTICE	LS	1	$2,000.00	$2,000.00

SUBTOTAL	$144,520.00
CONTINGENCIES (10%)	$14,452.00
TOTAL BASE BID	$158,972.00

Note: See section 01025 Measurement and Payment for bid form definitions

NKWD SUBDISTRICT 'O' - SCENIC RIDGE DRIVE WATER MAIN EXTENSION

Final Review 04-15-2025

Item No.	Description	Unit of Measure	Estimated Quantity	Unit Cost Total	Total Cost
1	6.03 C-900, C-909 Poly Vinyl Chloride (PVC) (8") (Detail 103, 103a, 104, 104a, 110)	LF	1526	$135.00	$206,010.00
2	7.01 CONNECT TO EXISTING MAIN/TIE-IN (8")	EA	1	$5,000.00	$5,000.00
3	8.01 INSTALL FIRE HYDRANT ASSEMBLY	EA	4	$8,000.00	$32,000.00
4	9.01 DUCTILE IRON RESILIENT SEATED GATE VALVE (8")	EA	2	$2,800.00	$5,600.00
5	10.05 INSTALL WATER METER SETTING (Service line materials provided by NKWD)	EA	6	$3,000.00	$18,000.00
6	11.04 PLUG AND BLOCK (8")	EA	1	$600.00	$600.00
7	11.06 8"x8"x6" ANCHORING TEE AND BLOCK	EA	4	$1,000.00	$4,000.00
8	12.05 1-1/2" ASPHALTIC CONCRETE MILLING AND PAVING	SY	1500	$60.00	$90,000.00
9	12.06 ASPHALTIC CONCRETE - TRENCH RESTORATION	SY	500	$200.00	$100,000.00
10	12.07 ASPHALTIC CONCRETE - DRIVEWAY	SY	22	$150.00	$3,240.00
11	12.14 BEST MANAGEMENT PRACTICE	LS	1	$2,000.00	$2,000.00

SUBTOTAL	$466,450.00
CONTINGENCIES (10%)	$46,645.00
TOTAL BASE BID	$513,095.00

Note: See section 01025 Measurement and Payment for bid form definitions

NKWD SUBDISTRICT 'O' - DECOURSEY PIKE WATER MAIN EXTENSION

Final Review 04-15-2025

Item No.	Description	Unit of Measure	Estimated Quantity	Unit Cost Total	Total Cost
1	6.01 CLASS 52 DUCTILE IRON PIPE (8"). (Detail 103, 103a, 104, 104a, 110)	LF	464	$160.00	$74,240.00
2	7.01 CONNECT TO EXISTING MAIN/TIE-IN (8")	EA	1	$5,000.00	$5,000.00
3	SPL - KYTC CHANNEL LINING, CLASS II (12") w/ NON-WOVEN GEOTEXTILE FILTER FABRIC	SY	8	$150.00	$1,200.00
4	12.14 BEST MANAGEMENT PRACTICE	LS	1	$2,000.00	$2,000.00
	SUBTOTAL				$82,440.00
	CONTINGENCIES (10%)				$8,244.00
	TOTAL BASE BID				$90,684.00

Note: See section 01025 Measurement and Payment for bid form definitions

NKWD SUBDISTRICT 'O' - STEEP CREEK ROAD WATER MAIN EXTENSION

Final Review 04-15-2025

Item No.	Description	Unit of Measure	Estimated Quantity	Unit Cost Total	Total Cost
1	6.01 CLASS 50 DUCTILE IRON PIPE (8"). (Detail 103, 103a, 104, 104a, 110)	LF	5370	$160.00	$859,200.00
2	7.01 CONNECT TO EXISTING MAIN/TIE-IN (8")	EA	0	$5,000.00	$0.00
3	8.01 INSTALL FIRE HYDRANT ASSEMBLY	EA	6	$8,000.00	$48,000.00
4	9.01 DUCTILE IRON RESILIENT SEATED GATE VALVE (8")	EA	6	$2,800.00	$16,800.00
5	10.05 INSTALL WATER METER SETTING (Service line materials provided by NKWD)	EA	4	$3,000.00	$12,000.00
6	11.04 PLUG AND BLOCK (8")	EA	1	$600.00	$600.00
7	11.06 8"x8"x6" ANCHORING TEE AND BLOCK	EA	6	$1,000.00	$6,000.00
8	11.06 8"x8"x8" ANCHORING TEE AND BLOCK	EA	1	$1,200.00	$1,200.00
9	12.05 1-1/2" ASPHALTIC CONCRETE MILLING AND PAVING	SY	1300	$60.00	$78,000.00
10	12.06 ASPHALTIC CONCRETE - TRENCH RESTORATION	SY	510	$200.00	$102,000.00
11	12.13 GRAVEL DRIVEWAY	SY	20	$60.00	$1,200.00
12	SPL - KYTC CHANNEL LINING, CLASS II (12") w/ NON-WOVEN GEOTEXTILE FILTER FABRIC	SY	50	$150.00	$7,500.00
13	12.14 BEST MANAGEMENT PRACTICE	LS	1	$2,000.00	$2,000.00
	SUBTOTAL				$1,134,500.00
	CONTINGENCIES (10%)				$113,450.00
	TOTAL BASE BID				$1,247,950.00

Note: See section 01025 Measurement and Payment for bid form definitions

NKWD SUBDISTRICT 'O' - MANN ROAD WATER MAIN EXTENSION

Final Review 04-15-2025

Item No.	Description	Unit of Measure	Estimated Quantity	Unit Cost Total	Total Cost
1	6.01 CLASS 50 DUCTILE IRON PIPE (8"). (Detail 103, 103a, 104, 104a, 110)	LF	303	$160.00	$48,480.00
2	6.02 CLASS 50 DUCTILE IRON PIPE (8") – RESTRAINED JOINT.	LF	288	$170.00	$48,960.00
3	7.01 CONNECT TO EXISTING MAIN/TIE-IN (8")	EA	1	$5,000.00	$5,000.00
4	8.01 INSTALL FIRE HYDRANT ASSEMBLY	EA	1	$8,000.00	$8,000.00
5	9.01 DUCTILE IRON RESILIENT SEATED GATE VALVE (8")	EA	1	$2,800.00	$2,800.00
6	10.05 INSTALL WATER METER SETTING (Service line materials provided by NKWD)	EA	4	$3,000.00	$12,000.00
7	11.01 CONCRETE ENCASEMENT	LF	88	$150.00	$13,200.00
8	11.04 PLUG AND BLOCK (8")	EA	1	$600.00	$600.00
9	11.06 8"x8"x6" ANCHORING TEE AND BLOCK	EA	1	$1,000.00	$1,000.00
10	11.11 TEST TAP	EA	1	$3,000.00	$3,000.00
11	12.05 1-1/2" ASPHALTIC CONCRETE MILLING AND PAVING	SY	125	$60.00	$7,500.00
12	12.06 ASPHALTIC CONCRETE - TRENCH RESTORATION	SY	20	$200.00	$4,000.00
13	12.13 GRAVEL DRIVEWAY	SY	11	$60.00	$660.00
14	12.14 BEST MANAGEMENT PRACTICE	LS	1	$2,000.00	$2,000.00
	SUBTOTAL				$157,200.00
	CONTINGENCIES (10%)				$15,720.00
	TOTAL BASE BID				$172,920.00

Note: See section 01025 Measurement and Payment for bid form definitions

NKWD SUBDISTRICT 'O' - GENE STREET WATER MAIN EXTENSION

Final Review 04-15-2025

Item No.	Description	Unit of Measure	Estimated Quantity	Unit Cost Total	Total Cost
1	6.01 CLASS 52 DUCTILE IRON PIPE *(8")* . (Detail 103, 103a, 104, 104a, 110)	LF	50	$160.00	$8,000.00
2	6.03 C-900, C-909 Poly Vinyl Chloride (PVC) (8") (Detail 103, 103a, 104, 104a, 110)	LF	1214	$135.00	$163,890.00
3	7.01 CONNECT TO EXISTING MAIN/TIE-IN (8")	EA	1	$5,000.00	$5,000.00
4	8.01 INSTALL FIRE HYDRANT ASSEMBLY	EA	3	$8,000.00	$24,000.00
5	10.05 INSTALL WATER METER SETTING (Service line materials provided by NKWD)	EA	4	$3,000.00	$12,000.00
6	11.04 PLUG AND BLOCK (8")	EA	1	$600.00	$600.00
7	11.06 8"x8"x6" ANCHORING TEE AND BLOCK	EA	3	$1,000.00	$3,000.00
8	12.05 1-1/2" ASPHALTIC CONCRETE MILLING AND PAVING	SY	830	$60.00	$49,800.00
9	12.09 CONCRETE PAVEMENT - TRENCH RESTORATION	SY	100	$200.00	$20,000.00
10	12.10 CONCRETE DRIVEWAY	SY	31	$150.00	$4,650.00
11	12.13 GRAVEL DRIVEWAY	SY	47	$60.00	$2,820.00
12	12.14 BEST MANAGEMENT PRACTICE	LS	1	$2,000.00	$2,000.00
	SUBTOTAL				$295,760.00
	CONTINGENCIES (10%)				$29,576.00
	TOTAL BASE BID				$325,336.00

Note: See section 01025 Measurement and Payment for bid form definitions

NKWD SUBDISTRICT 'O' - FISKBURG ROAD WATER MAIN EXTENSION

Final Review 04-15-2025

Item No.	Description	Unit of Measure	Estimated Quantity	Unit Cost Total	Total Cost
1	6.01 CLASS 52 DUCTILE IRON PIPE (8"). (Detail 103, 103a, 104, 104a, 110)	LF	4197	$160.00	$671,520.00
2	7.01 CONNECT TO EXISTING MAIN/TIE-IN (8")	EA	1	$5,000.00	$5,000.00
3	8.01 INSTALL FIRE HYDRANT ASSEMBLY	EA	5	$8,000.00	$40,000.00
4	9.01 DUCTILE IRON RESILIENT SEATED GATE VALVE (8")	EA	7	$2,800.00	$19,600.00
5	10.05 INSTALL WATER METER SETTING (Service line materials provided by NKWD)	EA	7	$3,000.00	$21,000.00
6	11.04 PLUG AND BLOCK (8")	EA	1	$600.00	$600.00
7	11.05 AIR RELEASE VALVE (ARV and service line materials provided by NKWD)	EA	1	$3,000.00	$3,000.00
8	11.06 8"x8"x6" ANCHORING TEE AND BLOCK	EA	5	$1,000.00	$5,000.00
9	11.06 8"x8"x8" ANCHORING TEE AND BLOCK	EA	2	$1,200.00	$2,400.00
10	12.05 1-1/2" ASPHALTIC CONCRETE MILLING AND PAVING	SY	1100	$60.00	$66,000.00
11	12.06 ASPHALTIC CONCRETE - TRENCH RESTORATION	SY	245	$200.00	$49,000.00
12	12.10 CONCRETE DRIVEWAY	SY	22	$150.00	$3,270.00
13	12.13 GRAVEL DRIVEWAY	SY	80	$60.00	$4,788.00
14	12.14 BEST MANAGEMENT PRACTICE	LS	1	$2,000.00	$2,000.00
	SUBTOTAL				$893,178.00
	CONTINGENCIES (10%)				$89,317.80
	TOTAL BASE BID				$982,495.80

Note: See section 01025 Measurement and Payment for bid form definitions

NKWD SUBDISTRICT 'O' - ALEXANDER ROAD WATER MAIN EXTENSION

Final Review 04-15-2025

Item No.	Description	Unit of Measure	Estimated Quantity	Unit Cost Total	Total Cost
1	6.01 CLASS 52 DUCTILE IRON PIPE *(8")* . (Detail 103, 103a, 104, 104a, 110)	LF	65	$160.00	$10,400.00
2	6.03 C-900, C-909 Poly Vinyl Chloride (PVC) (8") (Detail 103, 103a, 104, 104a, 110)	LF	2569	$135.00	$346,815.00
3	7.01 CONNECT TO EXISTING MAIN/TIE-IN (8")	EA	1	$5,000.00	$5,000.00
4	8.01 INSTALL FIRE HYDRANT ASSEMBLY	EA	4	$8,000.00	$32,000.00
5	9.01 DUCTILE IRON RESILIENT SEATED GATE VALVE (8")	EA	1	$2,800.00	$2,800.00
6	10.05 INSTALL WATER METER SETTING (Service line materials provided by NKWD)	EA	4	$3,000.00	$12,000.00
7	11.04 PLUG AND BLOCK (8")	EA	1	$600.00	$600.00
8	11.06 8"x8"x6" ANCHORING TEE AND BLOCK	EA	4	$1,000.00	$4,000.00
9	12.05 1-1/2" ASPHALTIC CONCRETE MILLING AND PAVING	SY	3000	$60.00	$180,000.00
10	12.06 ASPHALTIC CONCRETE - TRENCH RESTORATION	SY	800	$200.00	$160,000.00
11	12.07 ASPHALTIC CONCRETE - DRIVEWAY	SY	14	$150.00	$2,100.00
12	12.13 GRAVEL DRIVEWAY	SY	35	$60.00	$2,100.00
13	12.14 BEST MANAGEMENT PRACTICE	LS	1	$2,000.00	$2,000.00
	SUBTOTAL				$759,815.00
	CONTINGENCIES (10%)				$75,981.50
	TOTAL BASE BID				$835,796.50

Note: See section 01025 Measurement and Payment for bid form definitions

NKWD SUBDISTRICT 'O' - ELLIOT ROAD WATER MAIN EXTENSION

Final Review 04-15-2025

Item No.	Description	Unit of Measure	Estimated Quantity	Unit Cost Total	Total Cost
1	6.01 CLASS 52 DUCTILE IRON PIPE *(8")* . (Detail 103, 103a, 104, 104a, 110)	LF	54	$160.00	$8,640.00
2	6.03 C-900, C-909 Poly Vinyl Chloride (PVC) (8") (Detail 103, 103a, 104, 104a, 110)	LF	4829	$135.00	$651,915.00
3	7.01 CONNECT TO EXISTING MAIN/TIE-IN *(16")*	EA	1	$7,000.00	$7,000.00
4	8.01 INSTALL FIRE HYDRANT ASSEMBLY	EA	7	$8,000.00	$56,000.00
5	9.01 DUCTILE IRON RESILIENT SEATED GATE VALVE (8")	EA	3	$2,800.00	$8,400.00
6	10.05 INSTALL WATER METER SETTING (Service line materials provided by NKWD)	EA	6	$3,000.00	$18,000.00
7	11.04 PLUG AND BLOCK (8")	EA	1	$600.00	$600.00
8	11.06 8"x8"x6" ANCHORING TEE AND BLOCK	EA	7	$1,000.00	$7,000.00
9	12.05 1-1/2" ASPHALTIC CONCRETE MILLING AND PAVING	SY	5500	$60.00	$330,000.00
10	12.06 ASPHALTIC CONCRETE - TRENCH RESTORATION	SY	1650	$200.00	$330,000.00
11	12.07 ASPHALTIC CONCRETE - DRIVEWAY	SY	89	$150.00	$13,350.00
12	12.10 CONCRETE DRIVEWAY	SY	33	$150.00	$4,950.00
13	12.13 GRAVEL DRIVEWAY	SY	60	$60.00	$3,600.00
14	12.14 BEST MANAGEMENT PRACTICE	LS	1	$2,000.00	$2,000.00
	SUBTOTAL				$1,441,455.00
	CONTINGENCIES (10%)				$144,145.50
	TOTAL BASE BID				$1,585,600.50

Note: See section 01025 Measurement and Payment for bid form definitions

EXHIBIT A-3

SYSTEM HYDRAULIC MODEL

FIRE FLOW CERTIFICATION

Sub-District O
Gene St., Scenic Ridge Dr., Mason Rd., Alexander Rd., Fiskburg Rd., Goshorn Rd., Webster Rd., Pfanstiehl Rd., Elliott Rd., Justice Ln., Highwater Rd., Trace Run Rd., Mann Rd., & Steep Creek Rd.
Kenton County, KY
June 30, 2024

I certify that the proposed improvements meet the 807 KAR 5:066, Section 10b regulation for fire flow protection relating to KRS Chapter 278. I am certifying that "the system can provide a minimum fire flow of 250 gallons per minute; and the water system supporting this flow has the capability of providing this flow for a period of not less than two (2) hours plus consumption at the maximum daily rate". This certification is based on the information available and is not a guarantee of any precise results.

This certification is based on hydraulic modeling performed using InfoWater, the program available from Innovyze. Supporting documentation and operating conditions are attached and are the basis for this certification.

It should be noted that input data used for modeling is based on available data. Results can change and are dependent on the demand conditions, which can vary at any given time. These values will impact the final results when adjusted. The certification is based on estimated conditions and contains many assumptions based on historical data.

With this certification, the Northern Kentucky Water District will permit the construction of fire hydrants within this project.

Fire flow analyses were made using a hydrant within the project area that would provide a representative result that should simulate the results at other hydrants within the system. Minor variations at different hydrants would still provide a flow rate that meets the minimum standard.

STATE OF KENTUCKY
KYLE ANDREW RYAN
27367
6/30/24
LICENSED PROFESSIONAL ENGINEER

HYDRAULIC AND FLUSHING VELOCITY CERTIFICATION

Sub-District O
Gene St., Scenic Ridge Dr., Mason Rd., Alexander Rd., Fiskburg Rd., Goshorn Rd., Webster Rd., Pfanstiehl Rd., Elliott Rd., Justice Ln., Highwater Rd., Trace Run Rd., Mann Rd., & Steep Creek Rd.
Kenton County, KY
June 30, 2024

I certify that the proposed improvements are hydraulically capable of meeting the Kentucky Division of Water General Design Criteria for Surface and Ground Water Supplies standard for flushing velocity in the main meeting 2.5 feet per second while maintaining at least 20 psi pressure in accordance with 401 KAR 8:100.

The maximum flow rate that can reliably be supplied to the main and meet 20 psi in the system under maximum hour conditions is:

- Gene Street – 1,400 gpm
- Scenic Ridge Drive – 1,500 gpm
- Mason Road – 425 gpm
- Alexander Rd., Fiskburg Rd., & Pfanstiehl Rd. – 500 gpm
- Goshorn Road – 600 gpm
- Webster Road – 1,500 gpm
- Elliott Road – 950 gpm
- Justice Lane – 450 gpm
- Highwater Road – 1,500 gpm
- Trace Run Road – 950 gpm
- Mann Road & Steep Creek Road – 850 gpm

At least 30 psi can be maintained under the peak domestic demand for the 123 customers affected. The peak domestic demand using the D.R. Taylor formula is:

- 22.4 gpm on Gene Street (5 potential customers)
- 24.5 gpm on Scenic Ridge Drive (6 potential customers)
- 20.0 gpm on Mason Road (4 potential customers)
- 64.8 gpm on Alexander Rd., Fiskburg Rd., & Pfanstiehl Rd. (42 potential customers)
- 36.1 gpm on Goshorn Road (13 potential customers)
- 34.6 gpm on Webster Road (12 potential customers)
- 36.1 gpm on Elliott Road (13 potential customers)
- 20.0 gpm on Justice Lane (4 potential customers)
- 10.0 gpm on Highwater Road (1 potential customer)
- 31.6 gpm on Trace rund Road (10 potential customers)
- 36.1 gpm on Mann Rd. & Steep Creek Rd. (13 potential customers)

This certification is based on the information available and is not a guarantee of any precise results. Results are based on hydraulic modeling performed using InfoWater, the program available from Innovyze. Supporting documentation and operating conditions are attached and are the basis for this certification.

It should be noted that input data used for modeling is based on available data. Results can change and are dependent on the demand conditions, which can vary at any given time. These values will impact the final results when adjusted. The certification is based on estimated conditions for maximum hour demand conditions and contains many assumptions based on historical data.

With this certification, the Northern Kentucky Water District will permit the construction of the proposed development.

The assumed Hazen-Williams roughness coefficient for all new pipe was 120, which is suitable for ductile iron or PVC. The water level in the Devon, Industrial, Independence, Kenton Lands, & Barrington Tanks were one-half full.

STATE OF KENTUCKY
KYLE ANDREW RYAN
27367
6/30/24
LICENSED PROFESSIONAL ENGINEER

Sub-District O
Gene St., Scenic Ridge Dr., Mason Rd.,
Alexander Rd., Fiskburg Rd., Goshorn Rd.,
Webster Rd., Pfanstiehl Rd., Elliott Rd., Justice Ln.
Highwater Rd., Trace Run Rd., Mann Rd., Steep Creek Rd.
Kenton County, Kentucky
Output from InfoWater model - copied to Excel
June 30, 2024

Maximum Hour Run for Potential Customers

Gene Street

Maximum Hour Run, 5 potential Customers = 22.4 GPM				
9047N	7.5	940	1064.2	53.8
J68	7.5	912	1064.1	65.9
J70	7.5	930	1064.1	58.1

Scenic Ridge Drive

Maximum Hour Run, 6 potential Customers = 24.5 GPM				
8004N	4.9	846	1070.6	97.3
J72	4.9	838	1070.6	100.8
J74	4.9	842	1070.6	99.0
J76	4.9	824	1070.6	106.9
J80	4.9	851	1070.6	95.2

Mason Road

Maximum Hour Run, 4 potential Customers = 20 GPM				
9671N	6.7	740	1014.6	119.0
J82	6.7	576	1014.6	190.0
J84	6.7	665	1014.6	151.5

Alexander Rd, Fiskburg Road, & Pfanstiehl Road

Maximum Hour Run, 42 potential Customers = 64.8 GPM				
7109N	5.4	874	1047.5	75.2
J100	5.4	827	1047.4	95.5
J102	5.4	828	1047.4	95.1
J104	5.4	868	1047.4	77.7
J106	5.4	874	1047.4	75.1
J108	5.4	867	1047.4	78.2
J110	5.4	860	1047.4	81.2
J112	5.4	878	1047.4	73.4
J114	5.4	862	1047.4	80.3
J94	5.4	882	1047.4	71.7
J96	5.4	735	1047.4	135.3
J98	5.4	857	1047.4	82.5

Goshorn Road

Maximum Hour Run, 13 potential Customers = 36.1 GPM				
7010N	7.2	870	1047.6	76.9
J86	7.2	848	1047.5	86.4
J88	7.2	864	1047.5	79.5
J90	7.2	863	1047.5	79.9
J92	7.2	877	1047.5	73.9

Webster Road

Maximum Hour Run, 12 potential Customers = 34.6 GPM				
J116	5.8	653	1089.1	188.9
J118	5.8	642	1089.1	193.7
J120	5.8	623	1089.1	201.9
J122	5.8	615	1089.1	205.4
J124	5.8	635	1089.1	196.8
J126	5.8	615	1089.1	205.4

Elliott Road

Maximum Hour Run, 13 potential Customers = 36.1 GPM				
9239N	7.2	887	1049.4	70.4
J128	7.2	837	1049.3	92.0
J130	7.2	875	1049.3	75.5
J132	7.2	857	1049.3	83.3
J134	7.2	878	1049.3	74.2

Justice Lane

Maximum Hour Run, 4 potential Customers = 20 GPM				
7922N	6.7	844	1036.0	83.2
J136	6.7	840	1036.0	84.9
J138	6.7	847	1036.0	81.9

Highwater Road

Maximum Hour Run, 1 potential Customers = 10 GPM				
1962N	5.0	796	1015.6	95.2
J140	5.0	775	1015.6	104.3

Trace Run Road

Maximum Hour Run, 10 potential Customers = 31.6 GPM				
9162N	7.9	886	1059.1	75.0
J142	7.9	861	1059.1	85.8
J144	7.9	882	1059.1	76.7
J146	7.9	876	1059.1	79.3

Mann Road & Steep Creek Road

Maximum Hour Run, 13 potential Customers = 36.1 GPM				
8647N	7.2	598	739.0	61.1
J148	7.2	575	738.9	71.0
J150	7.2	530	739.0	90.5
J152	7.2	538	739.0	87.1
J154	7.2	548	739.0	82.7

Flushing Velocities Under Maximum Hour

Gene Street

Flushing velocity for new 8" pipe (under max hour)				
ID	Demand, gpm	Elevation, ft	Grade, ft	Pressure, psi
9047N	7.5	940	1061.3	52.6
J68	392.0	912	1056.5	62.6
J70	7.5	930	1059.0	55.9

Pipe Information for flushing velocity for new 8" pipe					
Pipe ID	Length, ft	Diam, inch	Flow, gpm	Velocity, fps	Roughness
P577	599	8	399	2.6	120
P579	668	8	392	2.5	120

Scenic Ridge Drive

Flushing velocity for new 8" pipe (under max hour)				
ID	Demand, gpm	Elevation, ft	Grade, ft	Pressure, psi
8004N	4.9	846	1063.5	94.2
J72	392.0	838	1057.7	95.2
J74	4.9	842	1058.6	93.8
J76	4.9	824	1061.1	102.7
J80	4.9	851	1062.9	91.8

Pipe Information for flushing velocity for new 8" pipe					
Pipe ID	Length, ft	Diam, inch	Flow, gpm	Velocity, fps	Roughness
P581	129	8	407	2.6	120
P583	667	8	397	2.5	120
P585	238	8	392	2.5	120
P587	470	8	402	2.6	120

Mason Road

Flushing velocity for new 8" pipe (under max hour)				
ID	Demand, gpm	Elevation, ft	Grade, ft	Pressure, psi
9671N	6.7	740	906.8	72.3
J82	392.0	576	902.6	141.5
J84	6.7	665	904.7	103.9

Pipe Information for flushing velocity at 2.5 fps for new 8" pipe					
Pipe ID	Length, ft	Diam, inch	Flow, gpm	Velocity, fps	Roughness
P589	545	8	399	2.5	120
P591	574	8	392	2.5	120

Alexander Rd., Fiskburg Rd.

Flushing velocity for new 8" pipe (under max hour)				
ID	Demand, gpm	Elevation, ft	Grade, ft	Pressure, psi
7109N	5.4	874	998.7	54.1
J100	5.4	827	994.4	72.5
J102	5.4	828	994.4	72.1
J104	5.4	868	994.4	54.8
J106	5.4	874	981.5	46.6
J108	5.4	867	988.6	52.7
J110	392.0	860	971.7	48.4
J112	5.4	878	974.0	41.6
J114	5.4	862	977.8	50.2
J94	5.4	882	994.5	48.7
J96	5.4	735	994.4	112.4
J98	5.4	857	994.4	59.5

Pipe Information for flushing velocity at 2.5 fps for new 8" pipe					
Pipe ID	Length, ft	Diam, inch	Flow, gpm	Velocity, fps	Roughness
P601	901	8	446	2.9	120
P613	1429	8	414	2.6	120
P615	1748	8	408	2.6	120
P617	945	8	403	2.6	120
P619	1001	8	397	2.5	120
P621	614	8	392	2.5	120

Pfanstiel Road

Flushing velocity for new 8" pipe (under max hour)				
ID	Demand, gpm	Elevation, ft	Grade, ft	Pressure, psi
7109N	5.4	874	998.7	54.1
J100	5.4	827	972.2	62.9
J102	5.4	828	977.1	64.6
J104	5.4	868	989.3	52.6
J106	5.4	874	994.4	52.2
J108	5.4	867	994.4	55.2
J110	5.4	860	994.4	58.2
J112	5.4	878	994.4	50.4
J114	5.4	862	994.4	57.4
J94	5.4	882	994.5	48.7
J96	392.0	735	966.8	100.4
J98	5.4	857	983.8	54.9

Pipe Information for flushing velocity at 2.5 fps for new 8" pipe					
Pipe ID	Length, ft	Diam, inch	Flow, gpm	Velocity, fps	Roughness
P603	1250	8	414	2.6	120
P605	1369	8	408	2.6	120
P607	1690	8	403	2.6	120
P609	1291	8	397	2.5	120
P611	1445	8	392	2.5	120

Goshorn Road

Flushing velocity for new 8" pipe (under max hour)				
ID	Demand, gpm	Elevation, ft	Grade, ft	Pressure, psi
7010N	7.2	870	999.7	56.2
J86	392.0	848	982.3	58.2
J88	7.2	864	988.6	54.0
J90	7.2	863	985.3	53.0
J92	7.2	877	995.5	51.4

Pipe Information for flushing velocity at 2.5 fps for new 8" & 12" pipe					
Pipe ID	Length, ft	Diam, inch	Flow, gpm	Velocity, fps	Roughness
P593	1007	8	414	2.6	120
P595	1724	8	406	2.6	120
P597	852	8	399	2.6	120
P599	816	8	392	2.5	120

Webster Road

Flushing velocity for new 8" pipe (under max hour)				
ID	Demand, gpm	Elevation, ft	Grade, ft	Pressure, psi
J116	5.8	653	1053.0	173.3
J118	392.0	642	1049.5	176.6
J120	5.8	623	1056.2	187.7
J122	392.0	615	1058.5	192.2
J124	5.8	635	1079.5	192.6
J126	5.8	615	1059.2	192.5

Pipe Information for flushing velocity for new 8" pipe					
Pipe ID	Length, ft	Diam, inch	Flow, gpm	Velocity, fps	Roughness
P625	1446	8	801	5.1	120
P627	179	8	392	2.5	120
P629	751	8	404	2.6	120
P631	832	8	398	2.5	120
P633	949	8	392	2.5	120

Elliott Road

Flushing velocity for new 8" pipe (under max hour)				
ID	Demand, gpm	Elevation, ft	Grade, ft	Pressure, psi
9239N	7.2	887	1031.9	62.8
J128	392.0	837	1012.8	76.2
J130	7.2	875	1020.7	63.1
J132	7.2	857	1016.3	69.0
J134	7.2	878	1025.8	64.0

Pipe Information for flushing velocity for new 8" pipe					
Pipe ID	Length, ft	Diam, inch	Flow, gpm	Velocity, fps	Roughness
P635	1491	8	414	2.6	120
P637	1261	8	406	2.6	120
P639	1128	8	399	2.6	120
P641	939	8	392	2.5	120

Justice Lane

Flushing velocity for new 8" pipe (under max hour)				
ID	Demand, gpm	Elevation, ft	Grade, ft	Pressure, psi
7922N	6.7	844	954.2	47.8
J136	392.0	840	947.4	46.5
J138	6.7	847	952.0	45.5

Pipe Information for flushing velocity for new 8" pipe					
Pipe ID	Length, ft	Diam, inch	Flow, gpm	Velocity, fps	Roughness
P643	562	8	399	2.5	120
P645	1239	8	392	2.5	120

Highwater Road

Flushing velocity for new 8" pipe (under max hour)				
ID	Demand, gpm	Elevation, ft	Grade, ft	Pressure, psi
1962N	5.0	796	1007.4	91.6
J140	392.0	775	1006.0	100.1

Pipe Information for flushing velocity for new 8" pipe					
Pipe ID	Length, ft	Diam, inch	Flow, gpm	Velocity, fps	Roughness
P647	366	8	392	2.5	120

Trace Run Road

Flushing velocity for new 8" pipe (under max hour)				
ID	Demand, gpm	Elevation, ft	Grade, ft	Pressure, psi
9162N	7.9	886	1045.7	69.2
J142	392.0	861	1029.5	73.0
J144	7.9	882	1040.3	68.6
J146	7.9	876	1035.5	69.1

Pipe Information for flushing velocity for new 8" pipe					
Pipe ID	Length, ft	Diam, inch	Flow, gpm	Velocity, fps	Roughness
P649	1356	8	408	2.6	120
P651	1236	8	400	2.6	120
P653	1594	8	392	2.5	120

Steep Creek

Flushing velocity for new 8" pipe (under max hour)				
ID	Demand, gpm	Elevation, ft	Grade, ft	Pressure, psi
8647N	7.2	598	736.2	59.9
J148	392.0	575	713.1	59.9
J150	7.2	530	721.1	82.8
J152	7.2	538	727.7	82.2
J154	7.2	548	721.1	75.0

Pipe Information for flushing velocity for new 8" pipe					
Pipe ID	Length, ft	Diam, inch	Flow, gpm	Velocity, fps	Roughness
P655	2060	8	414	2.6	120
P657	1656	8	406	2.6	120
P659	2122	8	392	2.5	120

Mann Road

Flushing velocity for new 8" pipe (under max hour)				
ID	Demand, gpm	Elevation, ft	Grade, ft	Pressure, psi
8647N	7.2	598	736.2	59.9
J148	7.2	575	721.0	63.3
J150	7.2	530	721.1	82.8
J152	7.2	538	727.7	82.2
J154	392.0	548	718.7	74.0

Pipe Information for flushing velocity for new 8" pipe					
Pipe ID	Length, ft	Diam, inch	Flow, gpm	Velocity, fps	Roughness
P661	627	8	392	2.5	120

Maximum Available Flow Under Maximum Hour

Gene Street

Maximum Hour Run, Maximum Available Flow				
ID	Demand, gpm	Elevation, ft	Grade, ft	Pressure, psi
9047N	7.5	940	1047.3	46.5
J68	1400.0	912	997.0	36.8
J70	7.5	930	1023.4	40.5

Scenic Ridge Drive

Maximum Hour Run, Maximum Available Flow				
ID	Demand, gpm	Elevation, ft	Grade, ft	Pressure, psi
8004N	4.9	846	1039.9	84.0
J72	1500.0	838	971.9	58.0
J74	4.9	842	982.6	60.9
J76	4.9	824	1012.7	81.8
J80	4.9	851	1034.0	79.3

Mason Road

Maximum Hour Run, Maximum Available Flow				
9671N	6.7	740	890.5	65.2
J82	425.0	576	885.6	134.1
J84	6.7	665	888.1	96.7
9673N*	1.5	842	896.1	23.4

* Area of min. pressure

Alexander Rd, Fiskburg Road, & Pfanstiehl Road

Maximum Hour Run, Maximum Available Flow				
7109N	5.4	874	977.9	45.0
J100	5.4	827	971.5	62.6
J102	5.4	828	971.5	62.2
J104	5.4	868	971.5	44.9
J106	5.4	874	951.6	33.6
J108	5.4	867	962.5	41.4
J110	500.0	860	936.2	33.0
J112	5.4	878	939.8	26.8
J114	5.4	862	945.8	36.3
J94	5.4	882	971.5	38.8
J96	5.4	735	971.5	102.5
J98	5.4	857	971.5	49.6

Goshorn Road

Maximum Hour Run, Maximum Available Flow				
7010N	7.2	870	957.7	38.0
J86	600.0	848	920.2	31.3
J88	7.2	864	934.1	30.4
J90	7.2	863	926.9	27.7
J92	7.2	877	948.9	31.2

Webster Road

Maximum Hour Run, Maximum Available Flow				
J116	5.8	653	932.6	121.1
J118	1500.0	642	890.0	107.5
J120	5.8	623	970.2	150.5
J122	5.8	615	1004.4	168.7
J124	5.8	635	1071.2	189.0
J126	5.8	615	1004.4	168.7

Elliott Road

Maximum Hour Run, Maximum Available Flow				
9239N	7.2	887	996.4	47.4
J128	950.0	837	901.3	27.9
J130	7.2	875	941.5	28.8
J132	7.2	857	919.4	27.1
J134	7.2	878	966.5	38.3

Justice Lane

Maximum Hour Run, Maximum Available Flow				
7922N	6.7	844	936.4	40.1
J136	450.0	840	927.7	38.0
J138	6.7	847	933.6	37.5
7944N*	0.1	871.08	941.7	30.6

*Area of min. pressure

Highwater Road

Maximum Hour Run, Maximum Available Flow				
1962N	5.0	796	961.7	71.8
J140	1500.0	775	945.3	73.8

Trace Run Road

Maximum Hour Run, Maximum Available Flow				
9162N	7.9	886	1005.8	51.9
J142	950.0	861	923.9	27.3
J144	7.9	882	978.8	42.0
J146	7.9	876	954.6	34.1

Mann Road & Steep Creek Road

Maximum Hour Run, Maximum Available Flow				
8647N	7.2	598	727.9	56.3
J148	850.0	575	634.1	25.6
J150	7.2	530	667.3	59.5
J152	7.2	538	694.1	67.6
J154	7.2	548	667.3	51.7

Pipe ID	From Node	To Node
P577	9047N	J70
P579	J70	J68
P585	J74	J72
P583	J76	J74
P587	J80	J76
P581	8004N	J80
P589	9671N	J84
P591	J84	J82
P593	7010N	J92
P595	J92	J88
P597	J88	J90
P599	J90	J86
P601	7109N	J94
P603	J94	J104
P605	J104	J98
P607	J98	J102
P609	J102	J100
P611	J100	J96
P613	J94	J108
P615	J108	J106
P617	J106	J114
P619	J114	J112
P621	J112	J110
P625	J124	J126
P627	J126	J122
P629	J126	J120
P631	J120	J116
P633	J116	J118
P635	9239N	J134
P637	J134	J130
P639	J130	J132
P641	J132	J128
P643	7922N	J138
P645	J138	J136
P647	1962N	J140
P649	9162N	J144
P651	J144	J146
P653	J146	J142
P655	8647N	J152
P657	J152	J150
P659	J150	J148
P661	J150	J154

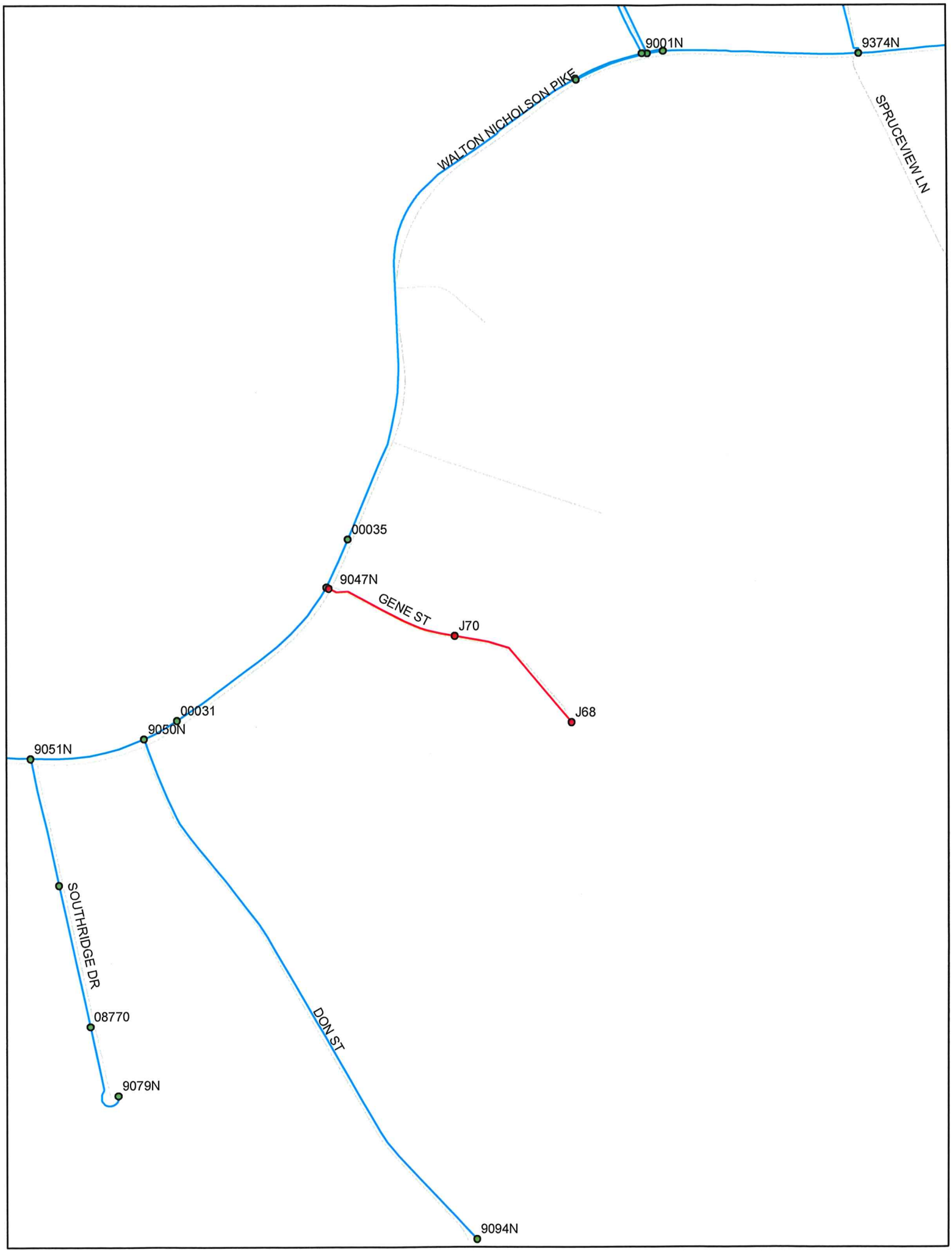
9001N
9374N
WALTON NICHOLSON PIKE
SPRUCEVIEW LN
00035
9047N
GENE ST
J70
J68
00031
9050N
9051N
SOUTHRIDGE DR
08770
9079N
DON ST
9094N

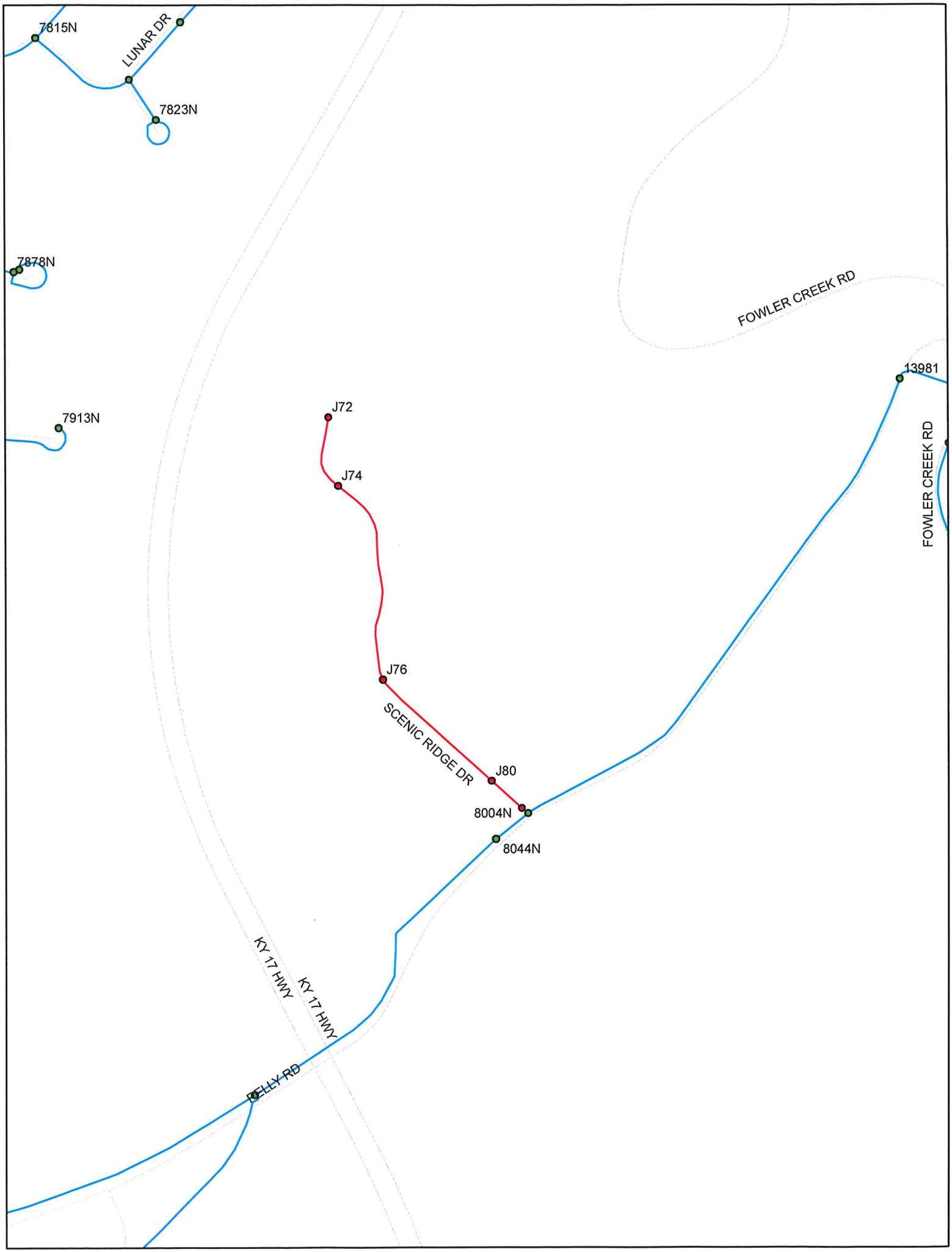
7815N
LUNAR DR
7823N
7878N
FOWLER CREEK RD
13981
7913N
J72
J74
FOWLER CREEK RD
J76
SCENIC RIDGE DR
J80
8004N
8044N
KY 17 HWY
KY 17 HWY
BELLY RD

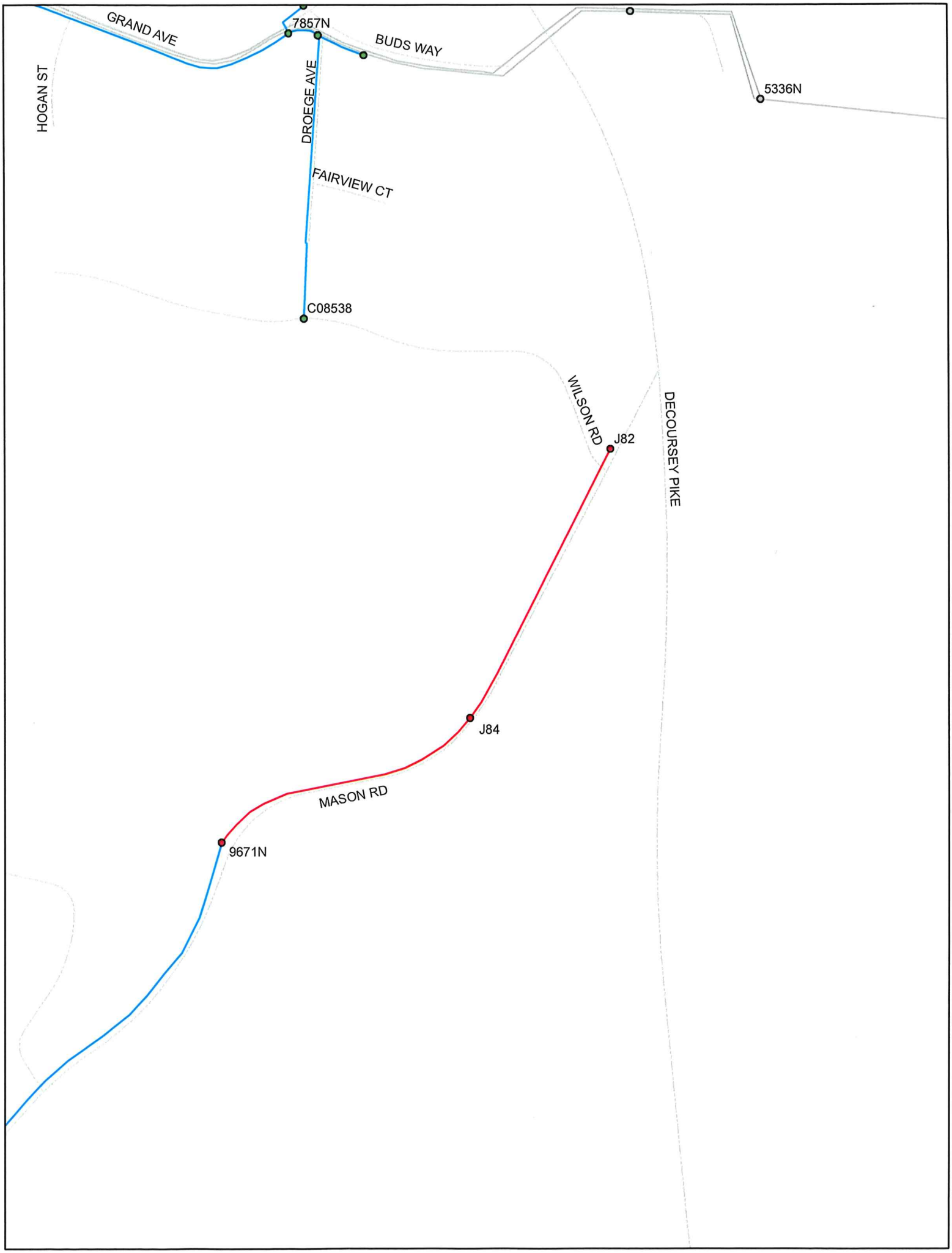
GRAND AVE
7857N
BUDS WAY
HOGAN ST
DROEGE AVE
5336N
FAIRVIEW CT
C08538
WILSON RD
J82
DECOURSEY PIKE
J84
MASON RD
9671N

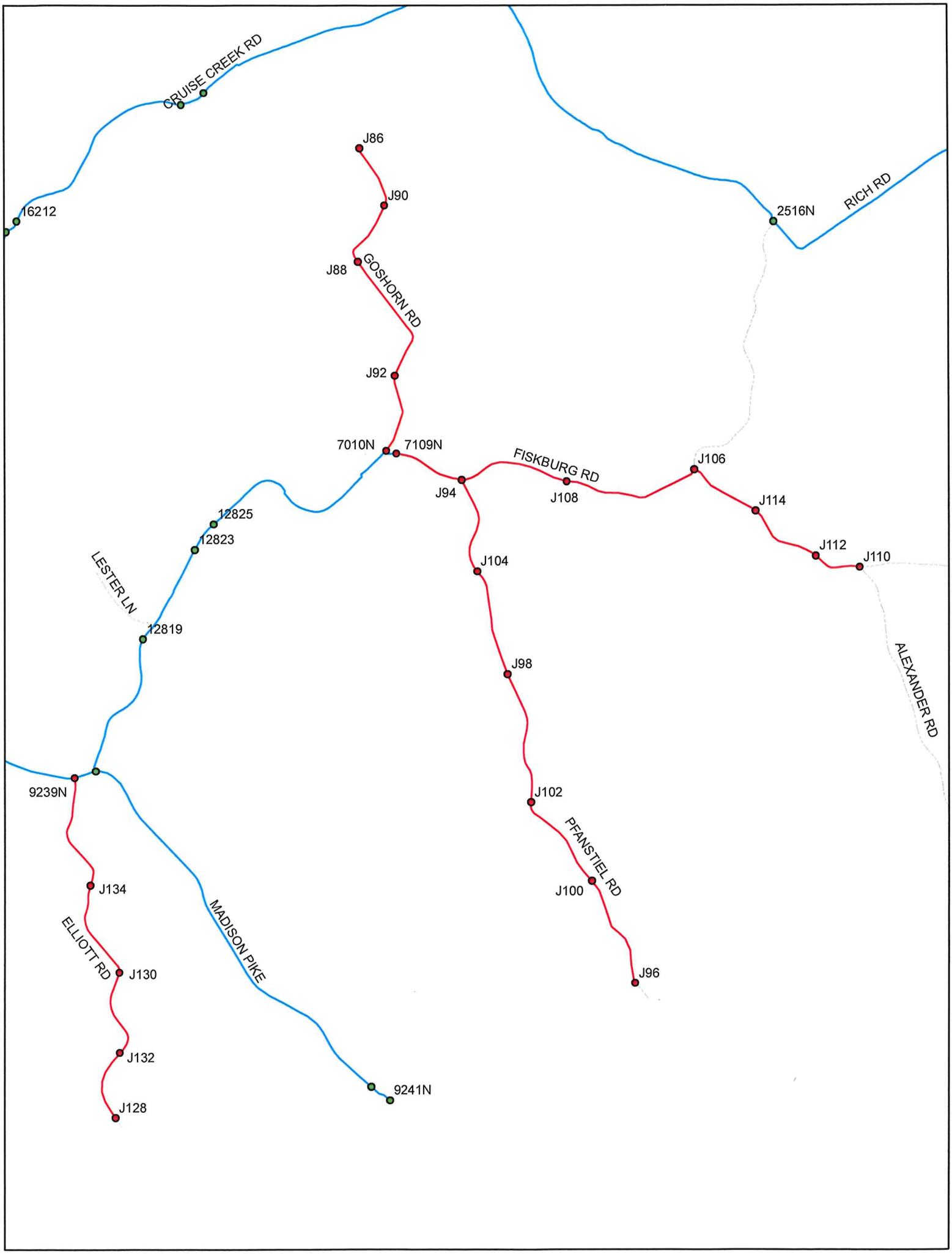
CRUISE CREEK RD
16212
J86
J90
J88
GOSHORN RD
J92
7010N
7109N
FISKBURG RD
J94
J108
J106
J114
J112
J110
2516N
RICH RD
12825
12823
LESTER LN
12819
J104
J98
ALEXANDER RD
9239N
J102
PFANSTIEL RD
J100
J96
J134
ELLIOTT RD
J130
MADISON PIKE
J132
J128
9241N

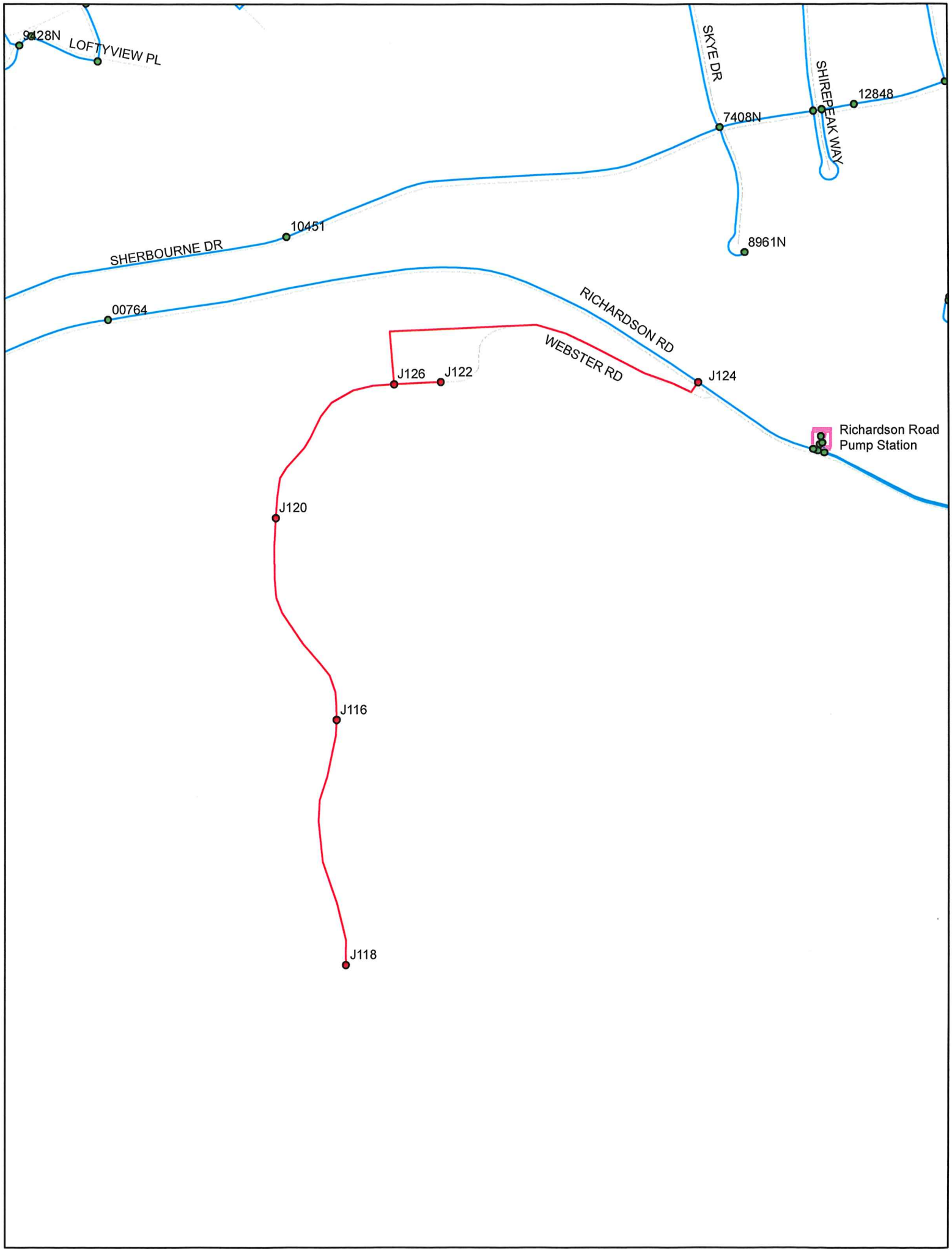
9428N
LOFTYVIEW PL
SKYE DR
SHIREPEAK WAY
12848
7408N
10451
SHERBOURNE DR
8961N
00764
RICHARDSON RD
WEBSTER RD
J126
J122
J124
Richardson Road
Pump Station
J120
J116
J118

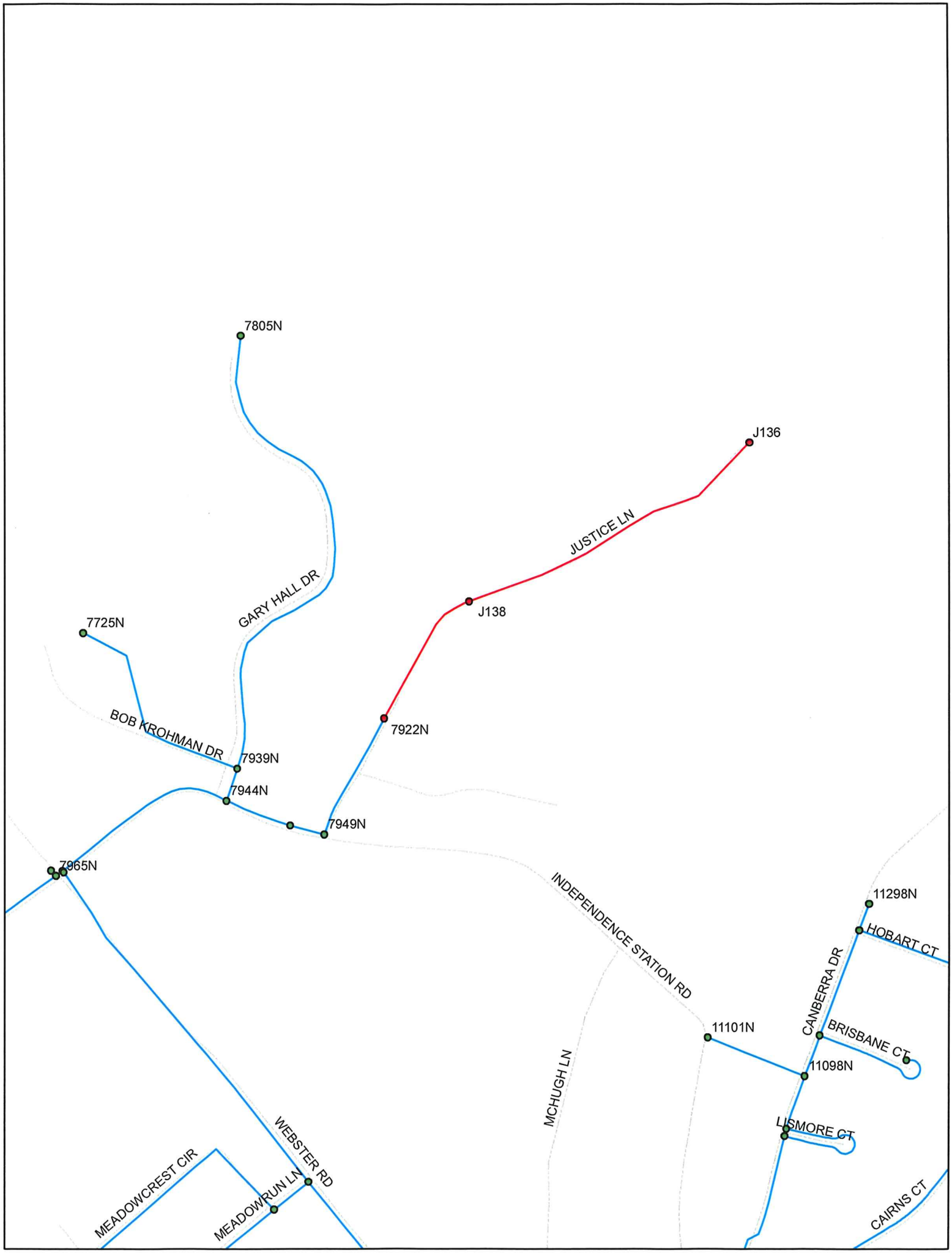
7805N
J136
JUSTICE LN
GARY HALL DR
J138
7725N
BOB KROHMAN DR
7922N
7939N
7944N
7949N
7965N
INDEPENDENCE STATION RD
11298N
HOBART CT
CANBERRA DR
11101N
BRISBANE CT
11098N
MCHUGH LN
LISMORE CT
WEBSTER RD
MEADOWCREST CIR
MEADOWRUN LN
CAIRNS CT

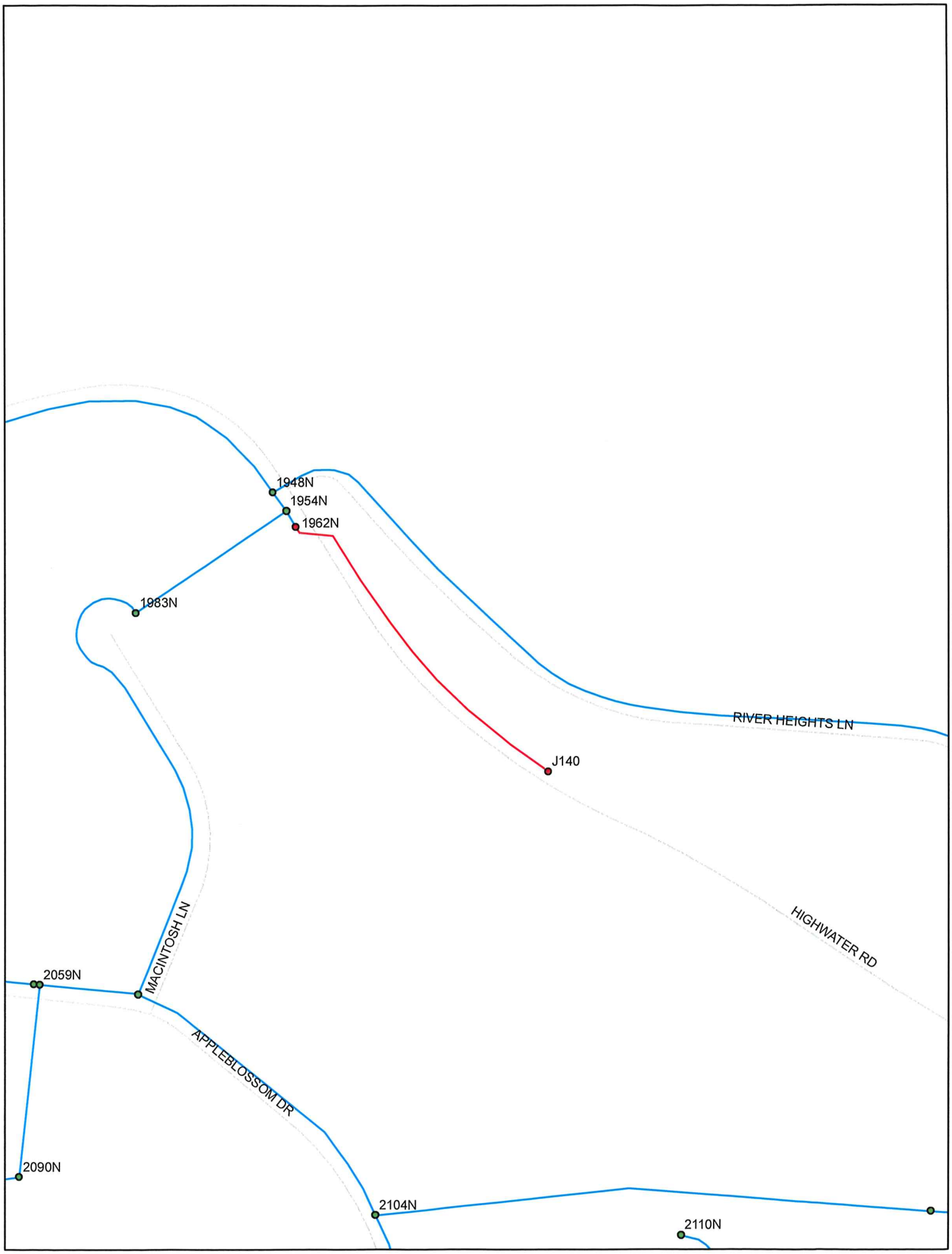
1948N
1954N
1962N
1983N
J140
RIVER HEIGHTS LN
HIGHWATER RD
MACINTOSH LN
2059N
APPLEBLOSSOM DR
2090N
2104N
2110N

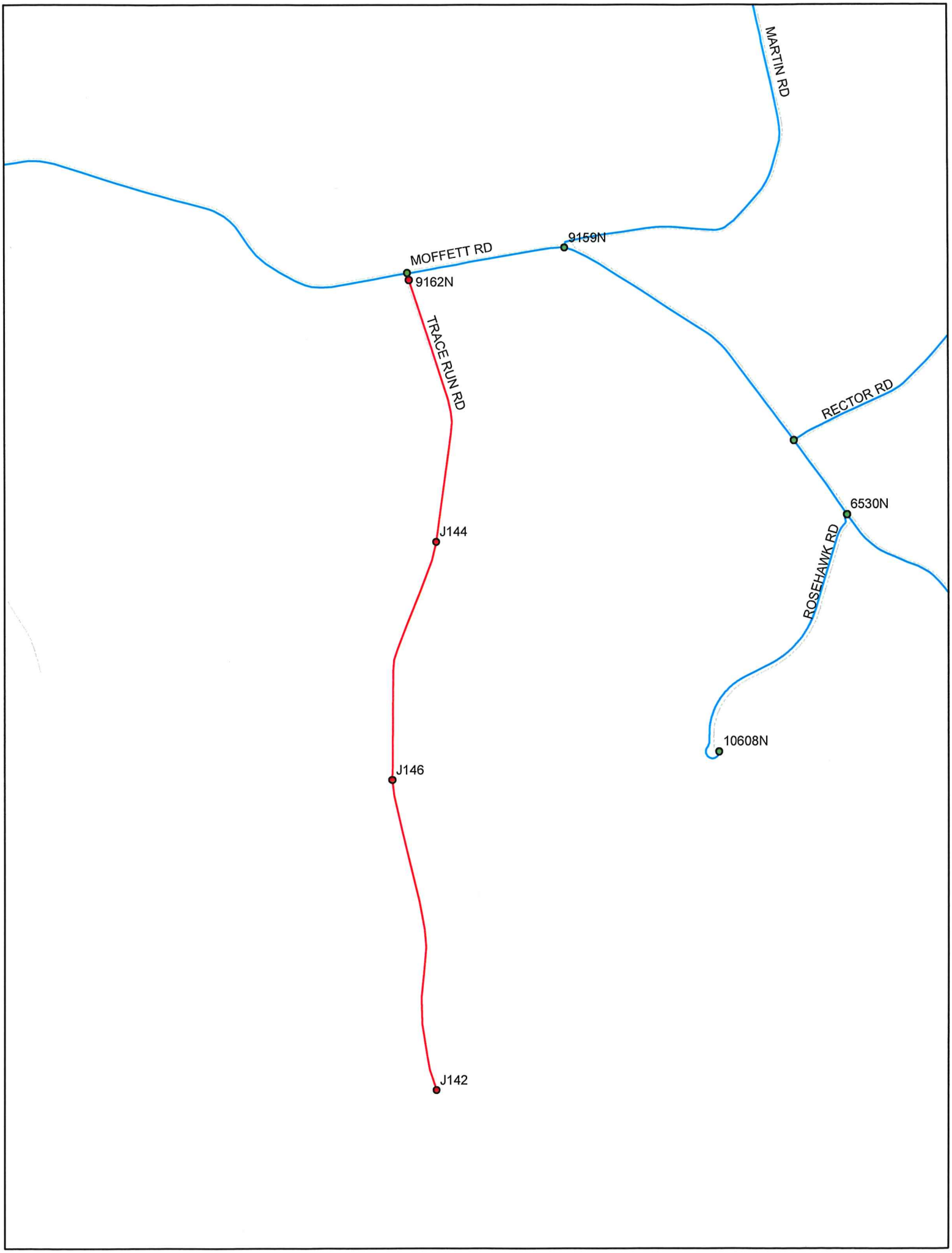
MARTIN RD
9159N
MOFFETT RD
9162N
TRACE RUN RD
RECTOR RD
6530N
J144
ROSEHAWK RD
10608N
J146
J142

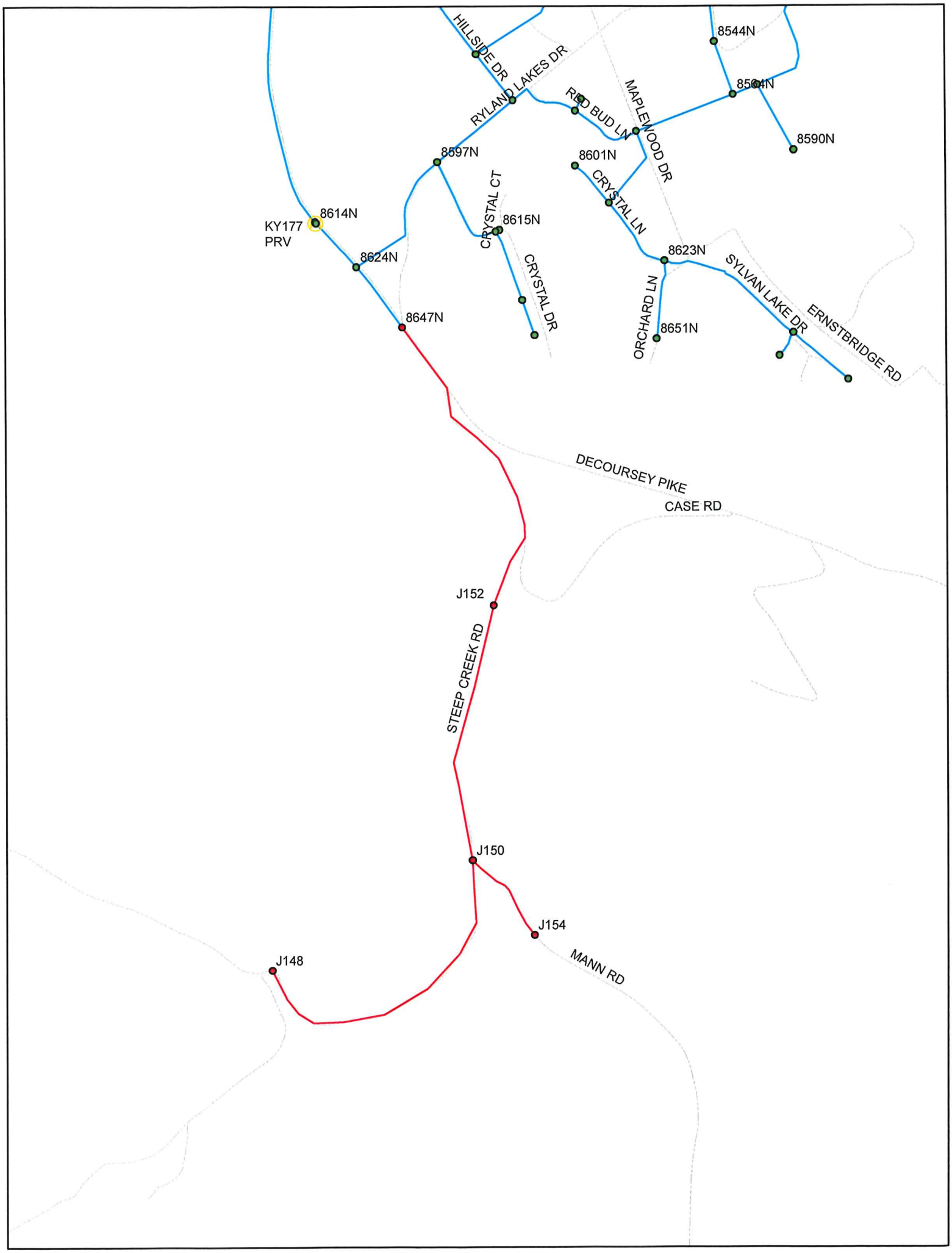
HILLSIDE DR
RYLAND LAKES DR
RED BUD LN
MAPLEWOOD DR
8544N
8564N
8590N
8597N
8601N
CRYSTAL CT
CRYSTAL LN
8614N
KY177
PRV
8615N
8624N
8623N
CRYSTAL DR
SYLVAN LAKE DR
ERNSTBRIDGE RD
ORCHARD LN
8651N
8647N
DECOURSEY PIKE
CASE RD
J152
STEEP CREEK RD
J150
J154
MANN RD
J148

EXHIBIT A-4

PLANS

NORTHERN KENTUCKY WATER DISTRICT
SUB-DISTRICT 'O'
WATER MAIN EXTENSION
KENTON COUNTY, KENTUCKY
231591

INDEX OF SHEETS		
NO.	DWG NAME	SHEET NAME
1	TTL	TITLE
2	G-01	GENERAL NOTES & LEGEND
3	G-02	DETAILS
4	G-03	DETAILS
5	G-04	DETAILS
6	G-05	DETAILS
7	G-06	EROSION CONTROL DETAILS
8	C-01	HIGHWATER ROAD
9-10	C-02 to C-03	SCENIC RIDGE DRIVE
11-15	C-04 to C-08	STEEP CREEK ROAD
16	C-09	STEEP CREEK / DECOURSEY
17	C-10	MANN ROAD
18	C-11	GENE STREET
19-22	C-12 to C-15	FISKBURG ROAD
23-24	C-16 to C-17	ALEXANDER ROAD
25-28	C-18 to C-21	ELLIOT ROAD

NORTHERN KENTUCKY WATER DISTRICT OFFICIALS

PRESIDENT / CEO
LINDSEY RECHTIN, CPA

COMMISSIONERS
JODY R. LANGE (Chair)
DOUGLAS C. WAGNER (Vice-Chair)
NICHOLAS E. WINNIKE (Secretary)
GARY E. HOLLAND (Treasurer)
FRED A. MACKE, JR. (Commissioner)
JOSEPH J. KOESTER (Commissioner)

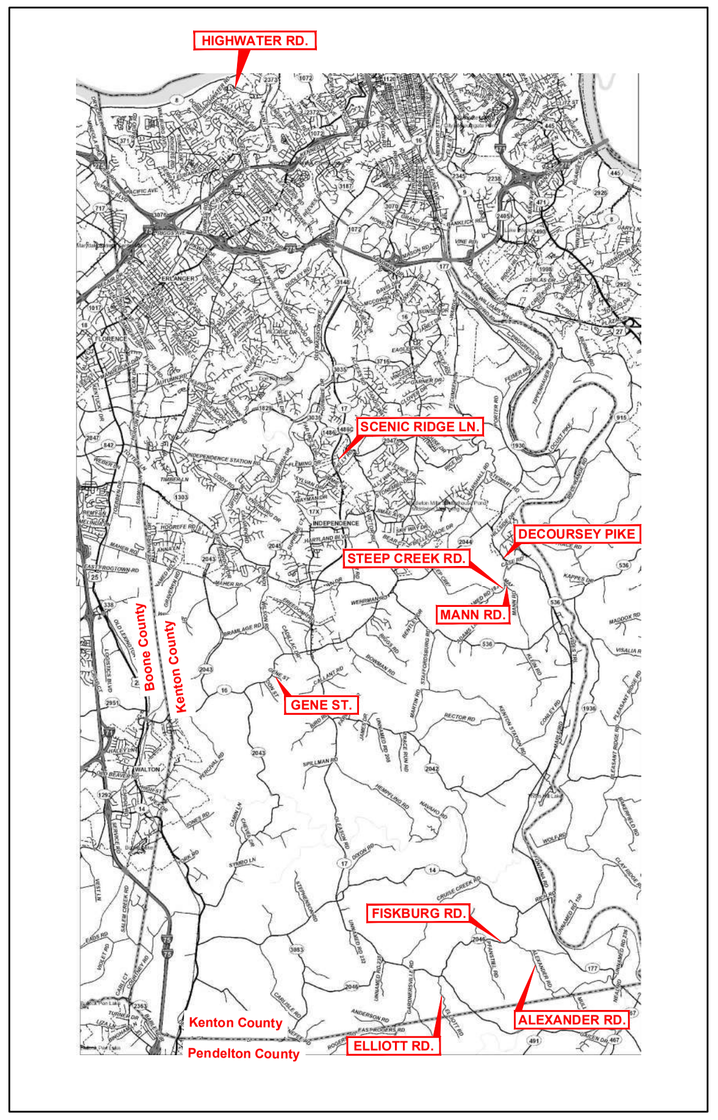

VICINITY MAP

NORTHERN KENTUCKY WATER DISTRICT SPECIFICATIONS

THE LATEST STANDARD SPECIFICATIONS AND DRAWINGS OF THE NORTHERN KENTUCKY WATER DISTRICT FOR THE INSTALLATION OF WATER MAIN AND METER PITS SHALL GOVERN ALL WATER MAIN CONSTRUCTION ITEMS ON THIS PROJECT.

KENTUCKY TRANSPORTATION CABINET SPECIFICATIONS

THE LATEST STANDARD SPECIFICATIONS OF THE KENTUCKY TRANSPORTATION CABINET, INCLUDING CHANGES AND SUPPLEMENTAL SPECIFICATIONS THERETO AND KENTON COUNTY SUBDIVISION REGULATIONS SHALL GOVERN THIS IMPROVEMENT.

SOURCE OF OUNDARY AND TOPOGRAPHIC INFORMATION

THE TOPOGRAPHIC INFORMATION SHOWN ON THESE PLANS IS BASED UPON A SURVEY BY CT CONSULTANTS, INC.
THE BOUNDARY INFORMATION SHOWN ON THESE PLANS IS BASED ON PLANNING AND DEVELOPMENT SERVICES (P.D.S.) G.I.S. MAPPING.

2 Business Days Before You Dig
Kentucky 811
Always Call 811
or 1-800-752-6007
Before you Dig
www.kentucky811.org

4/15/2025
STATE OF KENTUCKY
JAMES M SHUMATE
18156
LICENSED PROFESSIONAL ENGINEER

JAMES M. SHUMATE *P.E. #18156*

verdantas
2161 CHAMBER CENTER DRIVE
FORT MITCHELL, KENTUCKY 41017
TEL. (859) 525-0544
WWW.VERDANTAS.COM

NO	REVISION	DATE

ISSUED FOR:	BID
ISSUE DATE:	APRIL 2025
SCALE:	AS SHOWN
DESIGNED BY:	JCOR
DRAWN BY:	JCOR
CHECKED BY:	JSHU

NORTHERN KENTUCKY WATER DISTRICT
SUBDISTRICT 'O'
-KENTON COUNTY -

TITLE SHEET

PROJECT NO.	
231591	
DISCIPLINE	
CIVIL	
SHEET NAME	
TTL	
SHEET	OF
1	28

GENERAL NOTES

1. ALL CONSTRUCTION SHALL CONFORM TO THESE PLANS AND SPECIFICATIONS, THE LATEST EDITION OF THE NORTHERN KENTUCKY WATER DISTRICT STANDARD SPECIFICATIONS AND DRAWINGS AND THE KENTON COUNTY SUBDIVISION REGULATIONS AND THE KENTUCKY DEPARTMENT OF HIGHWAYS STANDARD SPECIFICATIONS FOR ROAD AND BRIDGE CONSTRUCTION.

2. ALL DISTURBED AREAS ARE TO BE RESTORED (SEEDED AND MULCHED) BY THE CONTRACTOR AND SHALL PROCEED WITH JOB PROGRESSION. THE CONTRACTOR SHALL ALSO BE RESPONSIBLE FOR REMOVING ANY EXCESS MATERIALS AT THE SITE AND MAINTAINING ALL SEEDED AND MULCHED AREAS UNTIL PROJECT COMPLETION AND FINAL INSPECTION PER KDOT SPEC. 212. A RESIDENTIAL YARD SHALL BE RESTORED WITHIN TWENTY-ONE (21) DAYS AFTER CONSTRUCTION.

3. ALL APPLICABLE RECOMMENDATIONS IN KENTUCKY'S BEST MANAGEMENT PRACTICES MANUAL SHALL BE FOLLOWED BY THE CONTRACTOR, INCLUDING SEEDING OF DISTURBED GROUND.

4. RIGHT-OF-WAY AND PROPERTY LINES SHOWN ARE PLOTTED FROM PLANNING AND DEVELOPMENT SERVICES (PDS) G.I.S. MAPPING AND ARE APPROXIMATE AND NOT THE RESULT OF A FIELD BOUNDARY SURVEY.

5. THE CONTRACTOR SHALL LIMIT THEIR WORK AREA TO THE EASEMENTS AND RIGHTS-OF-WAY SHOWN ON THESE PLANS UNLESS WRITTEN PERMISSION IS GIVEN BY THE PROPERTY OWNER AND APPROVED BY FORT N.K.W.D.

6. ALL OSHA, STATE AND LOCAL SAFETY REGULATIONS SHALL BE FOLLOWED DURING CONSTRUCTION.

7. NO CONSTRUCTION SHALL COMMENCE UNTIL ALL STATE, COUNTY AND LOCAL PERMITS HAVE BEEN ISSUED AS REQUIRED

8. THE CONTRACTOR SHALL COORDINATE ALL WORK WITHIN THE PUBLIC RIGHT OF WAY WITH THE KENTUCKY TRANSPORTATION CABINET AND KENTON COUNTY AND ANY LOCAL MUNICIPALITY. LOCAL TRAFFIC MUST BE MAINTAINED AT ALL TIMES DURING CONSTRUCTION UNLESS OTHERWISE NOTED IN THESE PLANS.

9. ADDITIONAL BMP'S AND EROSION AND SEDIMENT CONTROL MEASURES MAY BE REQUIRED AS DEEMED NECESSARY. ALL COST FOR ABOVE SHALL BE INCLUDED IN LUMP SUM BID FOR EROSION CONTROL AND WATER POLLUTION CONTROL.

10. ALL CONSTRUCTION WORK SHALL BE IN CONFORMANCE WITH THE RECOMMENDATIONS CONTAINED IN THE GEOTECHNICAL INVESTIGATION REPORT PREPARED BY G.A.I. CONSULTANTS DATED FEBRUARY 2024.

GENERAL TRENCH EXCAVATION NOTES

1. CONTRACTOR IS TO PROVIDE CONSTANT STABLE SUPPORT FOR THE WATER MAIN TRENCH EXCAVATION (ie SHEETING, SHORING, ETC.) TO PROTECT ALL ADJACENT EXISTING UTILITIES, STORM SEWER PIPE AND STRUCTURES AND THE EXISTING ROADWAY FROM ANY MOVEMENT. (NO ADDITIONAL PAYMENT WILL BE MADE FOR THIS WORK. ANY COSTS ASSOCIATED WITH TRENCH SUPPORT SHALL BE INCLUDED IN THE UNIT BID PRICE FOR THE ASSOCIATED WATER MAIN.

   TRENCH SUPPORT FAILURE RESULTING IN ADVERSE IMPACT TO EXISTING UTILITIES SHALL BE REPAIRED IMMEDIATELY AT THE CONTRACTOR'S EXPENSE.

2. TRENCH EXCAVATION AND OPEN, UNBACKFILLED LENGTH OF WATER MAIN TRENCH SHALL BE LIMITED AS NECESSARY ALONG THE ROADWAY IN ORDER TO PREVENT MOVEMENT OF, OR DAMAGE TO THE SURROUNDING GROUND SURFACE, NEARBY STRUCTURES/INFRASTRUCTURE AND THE EXISTING ROADWAY PAVEMENT.

   TRENCH EXCAVATION SHALL ALSO BE LIMITED TO THE CONTRACTOR'S ABILITY TO PROVIDE TRENCH BOXES FOR SUPPORT. UNDER NO CIRCUMSTANCES SHALL TRENCH EXCAVATION EXCEED LENGTH OF SUPPORT AVAILABLE.

UTILITY NOTES

1. THIS PLAN SHOWS THE APPROXIMATE LOCATION OF UNDERGROUND UTILITIES (GAS, WATER, STORM SEWER, SANITARY SEWER, TELEPHONE, ELECTRIC, ETC.). THE PREPARER DOES NOT GUARANTEE THEIR ACCURACY OR CORRECTNESS. THE INFORMATION PROVIDED SHALL BE FIELD VERIFIED PRIOR TO CONSTRUCTION. THE CONTRACTOR SHALL BE RESPONSIBLE FOR MAINTAINING THE UTILITY AS WELL AS THE SERVICE LATERALS AT ALL TIMES DURING CONSTRUCTION. THE CONTRACTOR SHALL PRACTICE CARE DURING THE GRADING AND TRENCH EXCAVATION AND SHALL BE RESPONSIBLE FOR REPLACING ANY SERVICES THAT ARE DAMAGED DURING CONSTRUCTION AT THEIR EXPENSE.

2. PRIOR TO ANY EXCAVATION OVER AN EXISTING UTILITY LINE OR SERVICE, CONTRACTOR SHALL HAND EXCAVATE TO EXPOSE THE UTILITY AND DETERMINE LOCATION AND DEPTH. NOTIFY ENGINEER IMMEDIATELY OF ANY CONFLICTS.

3. TOPS OF EXISTING AND PROPOSED CASTING ELEVATIONS ARE SUBJECT TO FINAL ADJUSTMENTS AS APPROVED BY THE ENGINEER AND REQUIREMENTS OF UTILITY OWNER. THIS WORK WILL BE INCIDENTAL TO THE CONTRACT.

4. FORTY-EIGHT (48) HOURS BEFORE EXCAVATION IS TO COMMENCE, THE CONTRACTOR SHALL NOTIFY THE FOLLOWING AGENCIES: THE KENTUCKY UTILITY PROTECTION SERVICE AND ALL OTHER UTILITIES THAT MAY HAVE UNDERGROUND UTILITIES INVOLVING THIS PROJECT AND ARE NON-MEMBERS OF KENTUCKY UNDERGROUND PROTECTION.

STORM & SANITARY NOTES

1. ALL STORM AND SANITARY ITEMS SHALL BE IN ACCORDANCE WITH THE LATEST SPECIFICATIONS AND DETAILS FROM SD1. METAL PIPE MATERIALS SHALL NOT BE USED UNLESS OTHERWISE SPECIFIED ON THESE PLANS.

2. CONTRACTOR SHALL BE REQUIRED TO MAINTAIN STORM AND SANITARY SEWER FLOW THROUGHOUT THE PROJECT, FOR THE DURATION OF CONSTRUCTION. ALL COST FOR THE ABOVE SHALL BE INCIDENTAL TO THE CONTRACT.

3. IF REQUIRED, CONTRACTOR SHALL BE RESPONSIBLE FOR CONTACTING AND SCHEDULING STORM AND SANITARY SEWER INSPECTIONS AS SET OUT IN THE PRECONSTRUCTION MEETING.

4. CONNECTIONS INTO EXISTING OR PROPOSED STORM OR SANITARY SEWER STRUCTURES OR PIPES SHALL BE COMPLETED BY A CERTIFIED TAPPER BY SD1.

WATER NOTES

1. ALL WORK RELATING TO WATER MAINS OR WATER SERVICE LINES SHALL BE COMPLETED IN ACCORDANCE WITH THE RULES AND REGULATIONS OF THE NORTHERN KENTUCKY WATER DISTRICT (NKWD).

2. CONTRACTOR MAY NOT USE WATER FROM FIRE HYDRANTS WITHOUT PRIOR PERMISSION FROM NKWD

GAS NOTES

1. ALL WORK RELATING TO GAS MAINS OR GAS SERVICE LINES SHALL BE COMPLETED IN ACCORDANCE WITH THE RULES AND REGULATIONS OF THE DUKE ENERGY

ELECTRIC NOTES

1. ALL WORK RELATING TO ELECTRIC LINES SHALL BE COMPLETED IN ACCORDANCE WITH THE RULES AND REGULATIONS OF THE DUKE ENERGY

WATER DISTRICT GENERAL NOTES

1. THE EXISTING WATER MAIN ELEVATION AND LOCATION AT THE CONNECTION POINT WITH THE PROPOSED MAIN WAS ASSUMED AND HAS NOT BEEN FIELD VERIFIED. PRIOR TO COMMENCEMENT OF ANY WATER MAIN WORK, THE CONTRACTOR SHALL DIG A TEST HOLE AT THE CONNECTION POINT TO LOCATE EXISTING WATER MAIN AS TO LOCATION AND ELEVATION. THE EXISTING WATER MAIN LOCATION MAY REQUIRE SOME FIELD ADJUSTMENT TO THE PROPOSED WATER MAIN INCLUDING ADJUSTING THE DEPTH OF THE PROPOSED WATER MAIN. COST OF DOING THE ABOVE SHALL BE INCIDENTAL TO THE PERTINENT WATER MAIN ITEM.

2. COST OF TRIMMING OR CLEARING ANY TREES, BUSHES, ETC. SHALL BE INCIDENTAL TO THE OVERALL CONTRACT PRICE AND SHALL BE APPROVED BY N.K.W.D. AND THE PROPERTY OWNER ALONG WITH COUNTY OR STATE WHEN REQUIRED.

3. THE UTILITY INFORMATION SHOWN ON THE PLANS IS BASED ON INFORMATION RECEIVED FROM OTHERS AND HAS NOT BEEN VERIFIED BY THE ENGINEER OR OWNER. IT SHALL BE THE RESPONSIBILITY OF THE CONTRACTOR TO VERIFY THE LOCATION OF THE UTILITIES AND TO COORDINATE ANY IMPACT CAUSED BY THE PROPOSED WORK WITH ALL UTILITY OWNERS AND/OR THEIR CONTRACTORS. THE CONTRACTOR WILL BE REQUIRED TO DIG TEST HOLES AT ALL UTILITY CROSSINGS TO LOCATE THE UTILITY AS TO BOTH LOCATION AND ELEVATION AND WILL BE REQUIRED TO REALIGN AND ADJUST THE ELEVATION OF THE PROPOSED WATER MAIN TO AVOID THE UTILITY. COST OF ALL THE ABOVE SHALL BE INCIDENTAL TO THE OVERALL CONTRACT PRICE.

4. UNLESS SPECIFICALLY INSTRUCTED OTHERWISE, RETURN ALL REMOVED WATER EQUIPMENT INCLUDING, FIRE HYDRANTS, VALVES, AND WATER METERS TO NORTHERN KENTUCKY WATER DISTRICT (N.K.W.D).

5. WATERLINES CROSSING UNDER OR OVER SEWER LINES (DEFINED AS ANY SANITARY/COMBINED SEWER, SEPTIC TANK OR SUBSOIL TREATMENT SYSTEM) MUST MAINTAIN A MINIMUM VERTICAL CLEARANCE OF 18" AND ONE FULL LENGTH OF PIPE SHALL BE LOCATED SO BOTH JOINTS ARE AS FAR FROM THE SEWER AS POSSIBLE. SPECIAL STRUCTURAL SUPPORT FOR THE WATER AND SEWER PIPES MAY BE REQUIRED.

6. CONTRACTOR IS RESPONSIBLE FOR KEEPING FIELD NOTES THAT PROVIDE SUFFICIENT DATA FOR PREPARING "RECORD DRAWINGS" UPON COMPLETION OF CONSTRUCTION.

7. ALL WATER MAIN CONSTRUCTION SHALL CONFORM TO THE NORTHERN KENTUCKY WATER DISTRICT SPECIFICATIONS. CONTRACTOR IS RESPONSIBLE FOR OBTAINING A CURRENT COPY OF THE NORTHERN KENTUCKY WATER DISTRICT'S STANDARD DRAWINGS.

8. ALL MATERIAL FOR THE PROP. WATER MAIN INSTALLATION INCLUDING ALL FITTINGS, BLOCKING, ETC., SHALL BE INCLUDED IN THE CONTRACTOR'S UNIT PRICE FOR WATER MAIN.

9. COST OF ALL TRENCHING, PIPE, PIPE BEDDING, BACKFILL, YARD RESTORATION AND TEMPORARY PAVEMENT, DRIVEWAY AND SIDEWALK RESTORATION SHALL BE PART OF THE COST OF INSTALLING THE WATER MAIN. PERMANENT DRIVEWAY RESTORATION, SIDEWALK RESTORATION, CURB RESTORATION AND STREET RESTORATION WILL BE SEPARATE PAY ITEMS AND INCLUDE INCIDENTALS SUCH AS MAIL BOX, STREET SIGN, AND FENCE REMOVAL AND REPLACEMENT.

10. THE PROPOSED WATER MAIN SHALL BE CLASS 50 DUCTILE IRON PIPE OR D.R. 18 C900 PVC AS SHOWN ON THE PLANS. WITHIN STATE ROUTE R/W, PIPE MATERIAL SHALL BE CLASS 52 DUCTILE IRON.

11. PROPOSED WATER MAIN SHALL BE THOROUGHLY CLEANED, FLUSHED, AND DISINFECTED, AS PER NORTHERN KENTUCKY WATER DISTRICT'S SPECIFICATIONS.

12. PRESSURE TESTING SHALL BE DONE AS PER NORTHERN KENTUCKY WATER DISTRICT'S SPECIFICATIONS.

13. FOR THRUST BLOCKING REFER TO THE NORTHERN KENTUCKY WATER DISTRICT'S STANDARD DRAWING NUMBERS 104 AND 104A.

14. THE PROPOSED WATER MAIN SHALL HAVE A HORIZONTAL SEPARATION OF AT LEAST 3'-0" (MEASURED FROM OUTSIDE OF PIPE TO OUTSIDE OF PIPE) FROM ANY GAS MAIN.

15. A 10' MINIMUM LATERAL SEPARATION BETWEEN WATER MAINS AND SEWERS (DEFINED AS ANY SANITARY/COMBINED SEWER, SEPTIC TANK OR SUBSOIL TREATMENT SYSTEM) AND SEWER MANHOLES, MEASURED FROM THE OUTSIDE DIAMETER TO OUTSIDE, MUST BE MAINTAINED UNLESS A VARIANCE IS GRANTED FROM THE D.O.W.

16. ALL NEW WATER SERVICES SHALL BE 3/4" (OR MATCH EXISTING, AS INDICATED ON THE PLANS) TYPE K COPPER WITH 5/8" OR 2" WATER METERS (UNLESS OTHERWISE NOTED) MATERIAL PROVIDED BY THE NORTHERN KENTUCKY WATER DISTRICT. ALL RECONNECTED WATER SERVICES SHALL BE 3/4" OR 2" TYPE K COPPER.

17. THE CONTRACTOR SHALL COORDINATE ALL WORK WITHIN THE PUBLIC RIGHT-OF-WAY WITH KYTC, KENTON COUTY AND/OR ANY LOCAL MUNICIPALITY. TRAFFIC MUST BE MAINTAINED AT ALL TIMES DURING CONSTRUCTION. MAINTENANCE OF TRAFFIC SHALL CONFORM TO THE "MANUAL OF UNIFORM TRAFFIC CONTROL DEVICES" REQUIREMENTS. NO ADDITIONAL PAYMENT WILL BE MADE FOR THIS WORK AND SHALL BE CONSIDERED INCIDENTAL TO THE CONTRACT.

18. **CONNECT SERVICE LINE (3/4" THRU 2"), INCLUDES THE LABOR, EQUIPMENT, EXCAVATION, BEDDING, BACKFILL , ASPHALT PAVEMENT , CONCRETE PAVEMENT, CONCRETE CURB, CONCRETE WALK AND YARD RESTORATION TO INSTALL THE SERVICE LINE AT THE LOCATIONS SHOWN ON THE PLANS OR AS DIRECTED, IN ACCORDANCE WITH THE SPECIFICATIONS AND STANDARD DRAWINGS, COMPLETE AND READY FOR USE. LEAD SERVICE LINES ENCOUNTERED BY THE EXCAVATION SHALL BE REPLACED FROM THE MAIN TO AND INCLUDING THE METER VAULT AND METER SETTING. ALL SERVICE LINE MATERIAL WILL BE SUPPLIED BY NKWD. PAID EACH (EA).**

19. THE CONTRACTOR SHALL COORDINATE WITH THE NORTHERN KENTUCKY WATER DISTRICT FOR FIELD INSPECTIONS.

20. FORTY-EIGHT (48) HOURS BEFORE EXCAVATION IS TO COMMENCE, THE CONTRACTOR SHALL NOTIFY THE FOLLOWING AGENCIES: THE KENTUCKY UTILITY PROTECTION SERVICE AND ALL OTHER UTILITIES THAT MAY HAVE UNDERGROUND UTILITIES INVOLVING THIS PROJECT AND ARE NON-MEMBERS OF KENTUCKY UNDERGROUND PROTECTION.

21. NO CONSTRUCTION SHALL COMMENCE UNTIL ALL KYTC, COUNTY AND/OR LOCAL PERMITS HAVE BEEN ISSUED AS REQUIRED.

22. CONTRACTOR IS RESPONSIBLE FOR DEWATERING TRENCH DURING INSTALLATION OF THE WATER MAIN.

23. THE COST OF TESTING THE MAIN, TEMPORARY FLUSHING DEVICES, TEMPORARY PLUG AND BLOCKS, AND ABANDONING THE EXISTING MAIN SHALL BE INCIDENTAL TO THE PROJECT.

24. ALL PAVEMENT SHALL CONFORM TO THE LATEST EDITION OF THE KENTUCKY DEPARTMENT OF HIGHWAYS STANDARD SPECIFICATIONS FOR ROAD AND BRIDGE CONSTRUCTION AND KENTON COUNTY SUBDIVISION REGULATIONS.

MAINTENANCE OF TRAFFIC NOTES

1. ALL MAINTENANCE OF TRAFFIC PROCEDURES SHALL MEET THE REQUIREMENT OF THE MANUAL OF UNIFORM TRAFFIC CONTROL DEVICES AND SECTION 112 OF KTC STANDARD SPECIFICATIONS. THE CONTRACTOR SHALL MAINTAIN ACCESS TO LOCAL TRAFFIC (INCLUDING ACCESS TO RESIDENCES WITHIN CONSTRUCTION LIMITS) AT ALL TIMES UTILIZING KTC STANDARD DRAWING TTC-100-05 "SINGLE LANE CLOSURE ON TWO-LANE HIGHWAY". THE CONTRACTOR SHALL PROVIDE SUFFICIENT SIGN, WARNING LIGHTS, BARRICADES, OR OTHER NECESSARY DEVICES MAKE THE SITE SAFE TO THE TRAVELING PUBLIC. LENGTH OF SINGLE LANE CLOSURES WILL BE HELD TO DISTANCES NOT ADVERSELY AFFECTING VEHICLE SAFETY.

2. ALL UNBACKFILLED TRENCH EXCAVATION SHALL BE SECURELY PLATED AT THE END OF EACH WORK DAY AND DURING PERIODS OF INACTIVITY.

3. IT SHALL BE THE CONTRACTOR'S RESPONSIBILITY TO SUBMIT TO THE ENGINEER AND THE OWNER A TRAFFIC CONTROL PLAN FOR THIS PROJECT.

4. PRIOR TO ANY CONSTRUCTION, THE CONTRACTOR SHALL NOTIFY THE APPROPRIATE STATE, COUNTY AND/OR LOCAL POLICE DEPARTMENTS. AT ALL TIMES, EMERGENCY VEHICLES SHALL BE GIVEN ACCESS.

5. RESIDENTS OF THE PROJECT AREA SHALL BE ALLOWED ACCESS TO THEIR PROPERTY AT ALL TIMES.

6. EACH DRIVEWAY SHALL BE ACCESSIBLE WHENEVER POSSIBLE. WHEN PORTLAND CEMENT CONCRETE CONSTRUCTION AFFECTS A DRIVEWAY, THE CONTRACTOR SHALL NOTIFY THE AFFECTED OWNERS 24 HOURS IN ADVANCE AND ADVISE THEM TO FIND ALTERNATIVE PARKING FOR A PERIOD OF AT LEAST 10 CALENDAR DAYS AFTER THE POUR. ALTERNATIVE PARKING SHALL INCLUDE "ON STREET" PARKING WITH ACCESS TO THE PROPERTY. TEMPORARY SIDEWALKS, ETC. WILL BE NECESSARY TO PREVENT PERSONS FROM WALKING IN MUD IN ORDER TO ENTER THEIR PROPERTY. TEMPORARY BRIDGES, RAILINGS ETC. WILL BECOME NECESSARY IN ORDER TO CROSS FORMED CURB LINES, EXCAVATED AREAS BEHIND CURB LINES AND WALKWAYS, ETC.

EROSION CONTROL LEGEND

- IP — INLET PROTECTION (SEE DETAIL)
- SF — SILT FENCE (SEE DETAIL)

HATCH LEGEND

- 1-1/2" ASPHALT PAVEMENT MILL AND OVERLAY AREA - SEE DETAIL SHEET G-05
- TRENCH RESTORATION - ASPHALT PAVEMENT - SEE DETAIL SHEET G-05
- TRENCH RESTORATION - CONCRETE PAVEMENT - SEE DETAIL SHEET G-05
- TRENCH RESTORATION - 8" AGGREGATE PAVEMENT - SEE DETAIL SHEET G-05
- CONTROL DENSITY FILL - PAV'T TRENCH
- CONCRETE DRIVEWAY REPLACEMENT - SEE DETAIL SHEET G-05
- CONCRETE WALK REPLACEMENT - SEE DETAIL SHEET G-05
- ASPHALT DRIVEWAY REPLACEMENT - SEE DETAIL SHEET G-05
- GRAVEL DRIVEWAY REPLACEMENT - SEE DETAIL SHEET G-05
- CHANNEL LINING, CLASS II - SEE DETAIL SHEET G-05

SYMBOL LEGEND

- EXISTING GAS LINE
- EXISTING GAS SERVICE
- EXISTING ELECTRIC (UNDERGROUND / OVERHEAD)
- EXISTING CABLE (UNDERGROUND / OVERHEAD)
- EXISTING TELEPHONE (UNDERGROUND / OVERHEAD)
- EXISTING WATER MAIN
- EXISTING WATER SERVICE
- EXISTING STORM SEWER
- EXISTING ROOF DRAIN
- EXISTING SANITARY SEWER
- EXISTING SANITARY FORCE MAIN
- EXISTING FIBER OPTICS
- EXISTING FENCE
- EXISTING CONTOURS (MAJOR)
- EXISTING CONTOURS (MINOR)
- EXISTING RIGHT OF WAY
- EXISTING PROPERTY LINE
- EXISTING EASEMENT
- EXISTING GUARDRAIL
- EXISTING TREE LINE
- EXISTING ROCK WALL

- PROPOSED GAS LINE
- PROPOSED GAS SERVICE
- EXISTING ELECTRIC (UNDERGROUND / OVERHEAD)
- PROPOSED CABLE (UNDERGROUND / OVERHEAD)
- PROPOSED TELEPHONE (UNDERGROUND / OVERHEAD)
- PROPOSED WATER MAIN
- PROPOSED WATER SERVICE
- PROPOSED STORM SEWER
- PROPOSED UNDERDRAIN
- PROPOSED UNDERDRAIN / DOWNSPOUT COLLECTOR COMBO
- PROPOSED SANITARY SEWER
- PROPOSED SANITARY FORCE MAIN
- PROPOSED FIBER OPTICS
- PROPOSED FENCE
- PROPOSED CONTOURS (MAJOR)
- PROPOSED CONTOURS (MINOR)
- PROPOSED RIGHT OF WAY
- PROPOSED PROPERTY LINE
- PROPOSED EASEMENT
- PROPOSED GUARDRAIL
- PROPOSED TREE LINE / CLEARING LIMITS
- PROPOSED DISTURBED LIMITS

- EXISTING FLAGPOLE
- EXISTING MAILBOX
- EXISTING SIGN
- EXISTING CABLE PEDESTAL
- EXISTING ELECTRIC PEDESTAL
- EXISTING PULL BOX
- EXISTING GROUND LIGHT
- EXISTING LIGHT POLE
- EXISTING ELECTRIC METER
- EXISTING ELECTRIC MANHOLE
- EXISTING GAS METER
- EXISTING GAS VALVE
- EXISTING GAS BOX
- EXISTING UTILITY POLE
- EXISTING GUY WIRE / ANCHOR
- EXISTING SANITARY MANHOLE
- EXISTING SANITARY CLEANOUT
- EXISTING STORM MANHOLE
- EXISTING SINGLE / DOUBLE CURB INLET
- EXISTING CATCH BASIN
- EXISTING STORM CLEANOUT
- EXISTING TELEPHONE MANHOLE
- EXISTING TELEPHONE PEDESTAL
- EXISTING FIRE HYDRANT
- EXISTING WATER METER
- EXISTING WATER VALVE
- EXISTING BUSHES / TREES
- EXISTING SURVEY BENCHMARK
- TEST BORING LOCATION

- PROPOSED FLAGPOLE
- PROPOSED MAILBOX
- PROPOSED SIGN
- PROPOSED CABLE PEDESTAL
- PROPOSED ELECTRIC PEDESTAL
- PROPOSED PULL BOX
- PROPOSED GROUND LIGHT
- PROPOSED LIGHT POLE
- PROPOSED ELECTRIC METER
- PRPOSED ELECTRIC MANHOLE
- PROPOSED GAS METER
- PROPOSED GAS VALVE
- PROPOSED GAS BOX
- PROPOSED UTILITY POLE
- PROPOSED GUY WIRE / ANCHOR
- PROPOSED SANITARY MANHOLE
- PROPOSED SANITARY CLEANOUT
- PROPOSED STORM MANHOLE
- PROPOSED SINGLE / DOUBLE CURB INLET
- PROPOSED CATCH BASIN
- PROPOSED STORM CLEANOUT
- PROPOSED TELEPHONE MANHOLE
- PROPOSED TELEPHONE PEDESTAL
- PROPOSED FIRE HYDRANT
- PROPOSED WATER METER
- PROPOSED WATER VALVE
- REMOVE EXISTING BUSH / TREE
- PROPOSED SLOPE DIRECTION

verdantas
2161 CHAMBER CENTER DRIVE
FORT MITCHELL, KENTUCKY 41017
TEL. (859) 525-0544
WWW.VERDANTAS.COM

NO	REVISION	DATE
-	-	-

ISSUED FOR:	BID
ISSUE DATE:	APRIL 2025
SCALE:	AS SHOWN
DESIGNED BY:	JCOR
DRAWN BY:	JCOR
CHECKED BY:	JSHU

NORTHERN KENTUCKY WATER DISTRICT
SUBDISTRICT 'O'
-KENTON COUNTY -

GENERAL NOTES AND LEGEND

PROJECT NO.	
231591	
DISCIPLINE	
CIVIL	
SHEET NAME	
G-01	
SHEET	OF
2	28

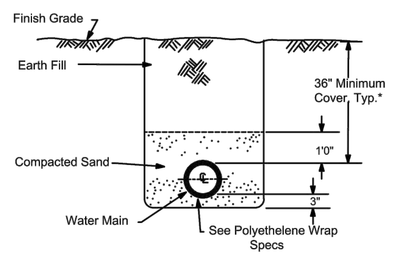

EARTH CUTS
TRENCH DETAIL

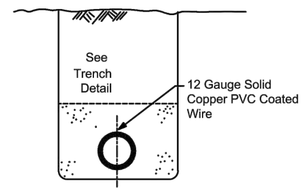

PVC PIPE

ALTERNATE TO BE USED ONLY ON APPROVAL BY THE DISTRICT

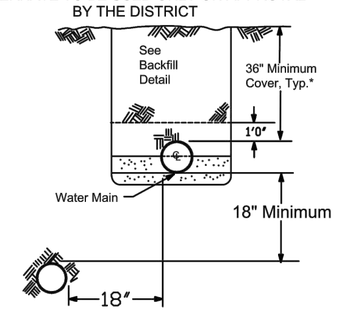

Water Main must be located a minimum of 10 feet lateral distance from anyexisting or future sewer lines or manholes, or as shown in the above alternate.

WATER MAIN PARALLELING
SEWER MAIN

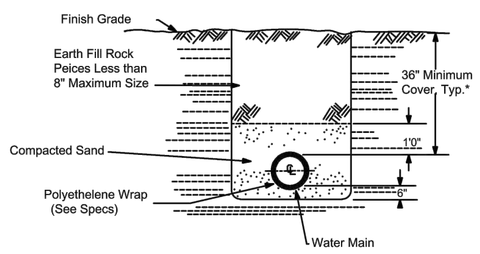

ROCK CUTS
& UNSTABLE SUBGRADE

TRENCH DETAIL

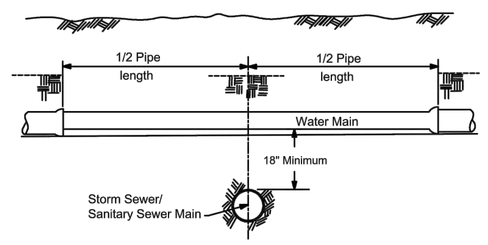

WATER MAIN CROSSING SEWER

SUBDIVISION CONSTRUCTION

* Unless Otherwise Noted

REVISION	BY	DATE
1. 8" Min. Rock size	MRT	1/1/09

N. KY. WATER DISTRICT
TYPICAL PIPELINE TRENCH DETAIL

DRAWN BY: SAR
APPROVED: RH
DATE: 8/5/2014
STANDARD DRAWING NO: 103

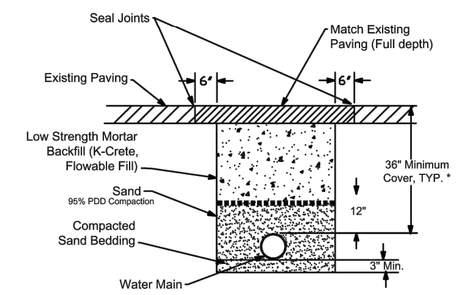

UNDER ASPHALT CONCRETE
PAVEMENT

PDD= Standard Proctor Dry Density
-ASTM D698

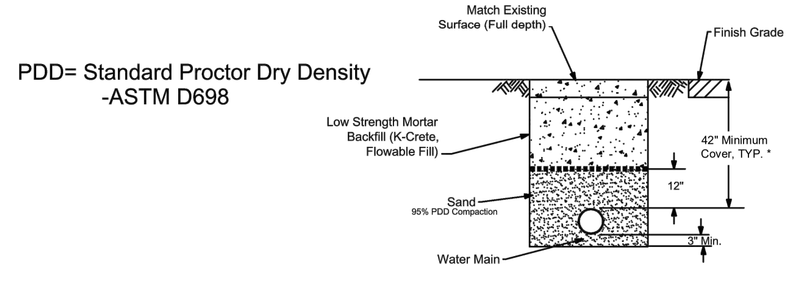

UNDER SHOULDER OF STATE
MAINTAINED STREET

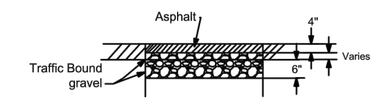

TEMPORARY STREET
RESTORATION

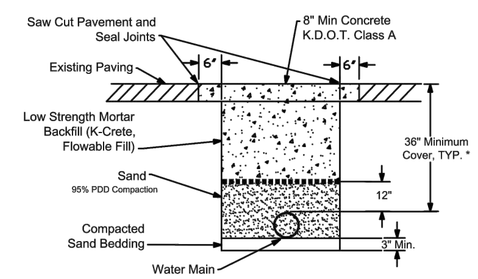

UNDER CONCRETE PAVEMENT

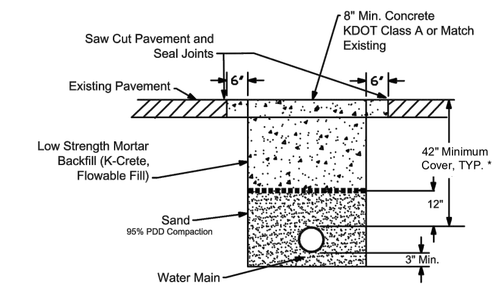

UNDER STATE MAINTAINED STREET

* 48" Maximum Cover

ALL CONSTRUCTION

REVISION	BY	DATE
1. All pavers to be light rocker	SAR	1/0/2006

N. KY. WATER DISTRICT
TYPICAL PIPELINE TRENCH DETAIL

DRAWN BY: SAR
APPROVED: RH
DATE: 8/5/2014
STANDARD DRAWING NO: 103A

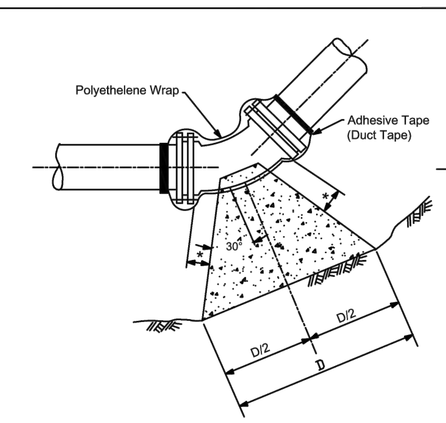

45° BEND

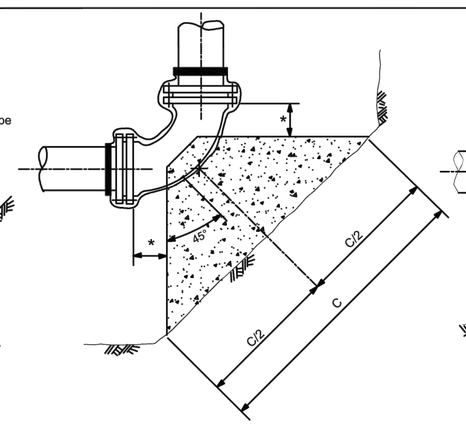

90° BEND

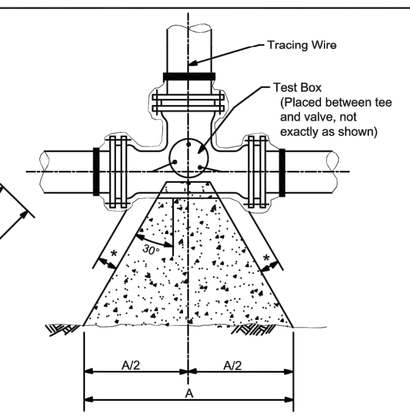

TEE (DEAD END OR FIRE HYDRANT SIMILAR)

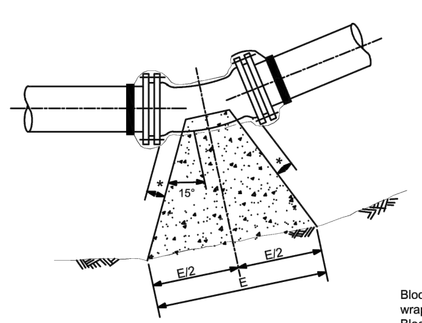

11 1/4° & 22 1/2° BEND

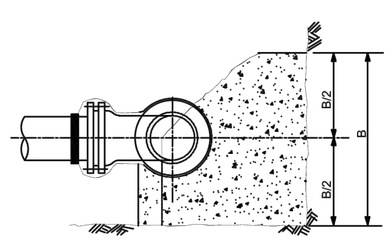

ELEVATION

Blocking shall be poured after blue polyethelene wrap is in place.
Blocking shall be inspected by the District prior to backfilling.

150 PSI/250 PSI

PIPE SIZE	A	B	C	D	E
6"	2'0"/2'6"	1'6"/1'6"	3'0"/3'6"	1'6"/2'0"	1'0"/1'0"
8"	2'6"/3'6"	2'0"/2'0"	3'6"/4'6"	2'0"/2'6"	1'0"/1'6"
10"	3'6"/4'0"	2'6"/2'6"	4'6"/5'6"	2'6"/3'0"	1'6"/1'6"
12"	4'0"/5'0"	3'0"/3'0"	5'6"/6'6"	3'0"/3'6"	1'6"/2'0"
16"	5'0"/6'0"	3'0"/4'0"	7'0"/8'6"	4'0"/4'6"	3'0"/3'0"
20"	6'0"/7'6"	5'0"/5'0"	7'0"/10'6"	4'0"/6'0"	3'0"/3'0"

* Distance to be 1/2" longer than entire length of the bolt used.

NOTES

1 DIP Fittings shall be per specifications.
2 Concrete to be 3500 psi.
3 All fittings to be Mechanical Joint.
4 Thrust blocks to be placed against undisturbed earth - use additional concrete as required for over excavation.
5 Blocking to be placed in a manner so that bolts can be removed without distrubing the block.

REVISION	BY	DATE

N. KY. WATER DISTRICT
CONCRETE THRUST BLOCK DETAIL

DRAWN BY: SAR
APPROVED: RH
DATE: 8/5/2014
STANDARD DRAWING NO: 104

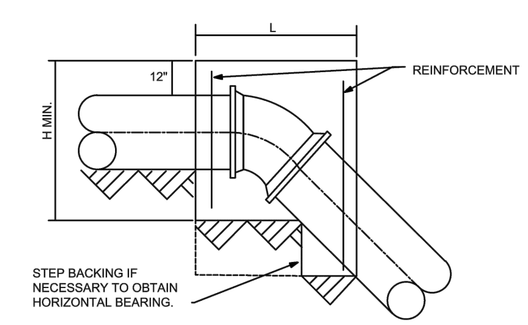

SECTION A-A

SIZE of PIPE	DEGREE OF BEND											
	11 1/4				22 1/2				45			
	L"	W"	H"	VOL.	L"	W"	H"	VOL.	L"	W"	H"	VOL.
4"	12	24	16	2.7	15	30	18	4.7	22	36	24	11.0
6"	12	43	18	5.4	16	48	34	15.1	30	55	24	22.9
8"	12	54	24	9.0	18	57	36	21.4	36	57	33	39.2
12"	20	63	36	26.3	37	62	37	49.2	48	62	51	88.0
16"	31	65	38	44.4	60	65	39	88.2	65	65	65	159.2
20"	45	70	40	73.0	56	70	60	136.4	72	76	78	247.5
24"	47	72	54	106.0	67	74	69	198.4	88	84	84	360.1

NOTE: VOLUMES GIVEN IN CUBIC FEET

CONCRETE BACKING FOR VERTICAL BENDS

1. BACKING DESIGNED FOR 3000 POUNDS PER SQUARE FOOT SOIL BEARING AND 150 POUNDS PER SQUARE INCH INTERNAL PRESSURE.

2. PROVIDE MINIMUM CONCRETE REINFORCEMENT OF 2 PAIR OF TWO 5" "U" BARS @ 12" C.

3. CENTER BACKING ON BEND.

BLOCKING FOR SIZES NOT SHOWN SHALL USE THE NEXT LARGER SIZE.

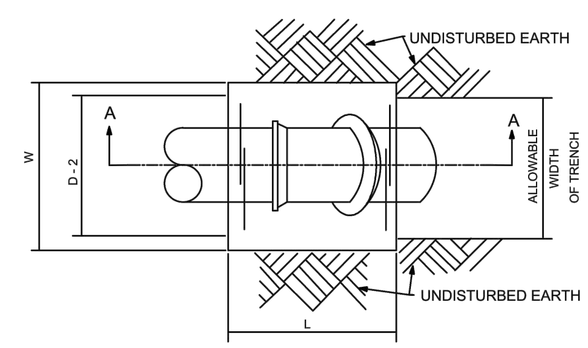

PLAN

REVISION	BY	DATE

N. KY. WATER DISTRICT
CONCRETE THRUST BLOCKING FOR VERTICAL BENDS

DRAWN BY: SAR
APPROVED: RH
DATE: 8/5/2014
STANDARD DRAWING NO: 104A

verdantas
2161 CHAMBER CENTER DRIVE
FORT MITCHELL, KENTUCKY 41017
TEL. (859) 525-0544
WWW.VERDANTAS.COM

NO	REVISION	DATE
-	-	-

ISSUED FOR:	BID
ISSUE DATE:	APRIL 2025
SCALE:	AS SHOWN
DESIGNED BY:	JCOR
DRAWN BY:	JCOR
CHECKED BY:	JSHU

NORTHERN KENTUCKY WATER DISTRICT
SUBDISTRICT 'O'
-KENTON COUNTY -

DETAILS

PROJECT NO. 231591
DISCIPLINE CIVIL
SHEET NAME G-02
SHEET 3 OF 28

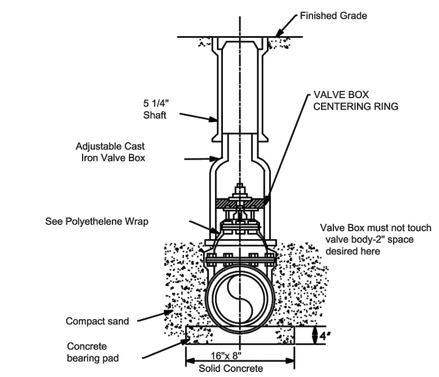

Detail Valve Box Installation

Note:Valve box shall not transmit shock or stress to the valve

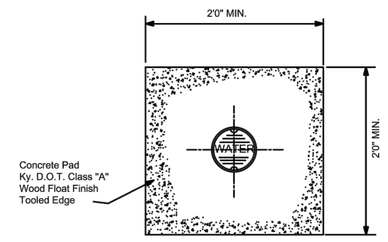

PLAN

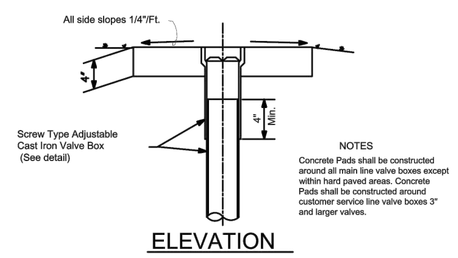

ELEVATION

NOTES

Concrete Pads shall be constructed around all main line valve boxes except within hard paved areas. Concrete Pads shall be constructed around customer service line valve boxes 3" and larger valves.

REVISION	BY	DATE
1. 22" Concrete pad size	MPS	6/28/10
2. Add Valve Box Installation	MPS	9/2/10

N. KY. WATER DISTRICT

VALVE BOX AND VALVE PAD DETAIL

DRAWN BY: SAR

APPROVED: RH

DATE: 8/5/2014

STANDARD DRAWING NO: 105

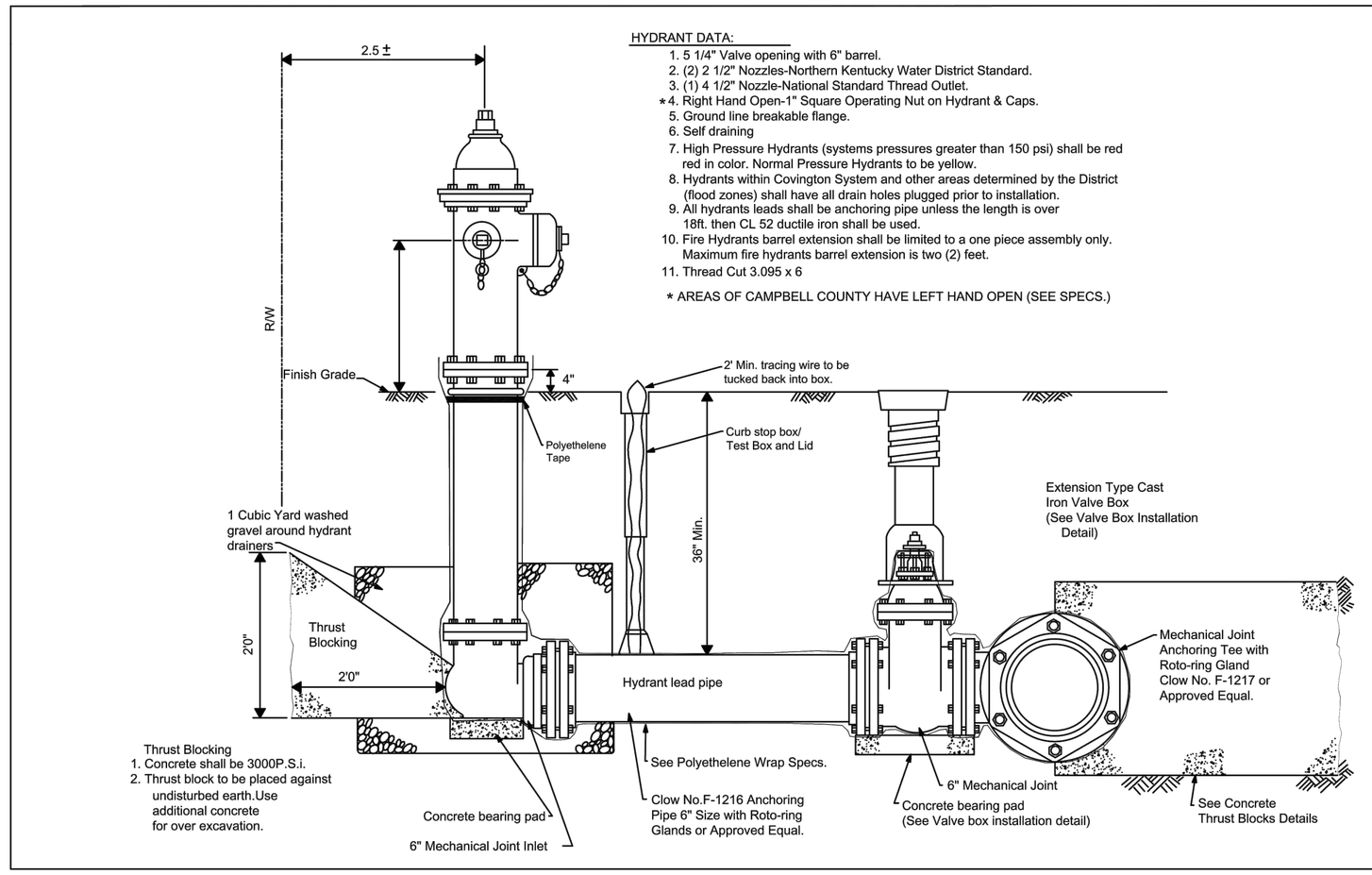

HYDRANT DATA:

1. 5 1/4" Valve opening with 6" barrel.
2. (2) 2 1/2" Nozzles-Northern Kentucky Water District Standard.
3. (1) 4 1/2" Nozzle-National Standard Thread Outlet.
4. * Right Hand Open-1" Square Operating Nut on Hydrant & Caps.
5. Ground line breakable flange.
6. Self draining
7. High Pressure Hydrants (systems pressures greater than 150 psi) shall be red red in color. Normal Pressure Hydrants to be yellow.
8. Hydrants within Covington System and other areas determined by the District (flood zones) shall have all drain holes plugged prior to installation.
9. All hydrants leads shall be anchoring pipe unless the length is over 18ft. then CL 52 ductile iron shall be used.
10. Fire Hydrants barrel extension shall be limited to a one piece assembly only. Maximum fire hydrants barrel extension is two (2) feet.
11. Thread Cut 3.095 x 6

* AREAS OF CAMPBELL COUNTY HAVE LEFT HAND OPEN (SEE SPECS.)

REVISION	BY	DATE
Revisions per owrk presentation	MPS	6/28/10
Revisions to format	MPS	3/02/09
Revisions beside WM	MPS	3/02/09

N. KY. WATER DISTRICT

HYDRANT ASSEMBLY

DRAWN BY: SAR

APPROVED: RH

DATE: 8/5/2014

STANDARD DRAWING NO: 109

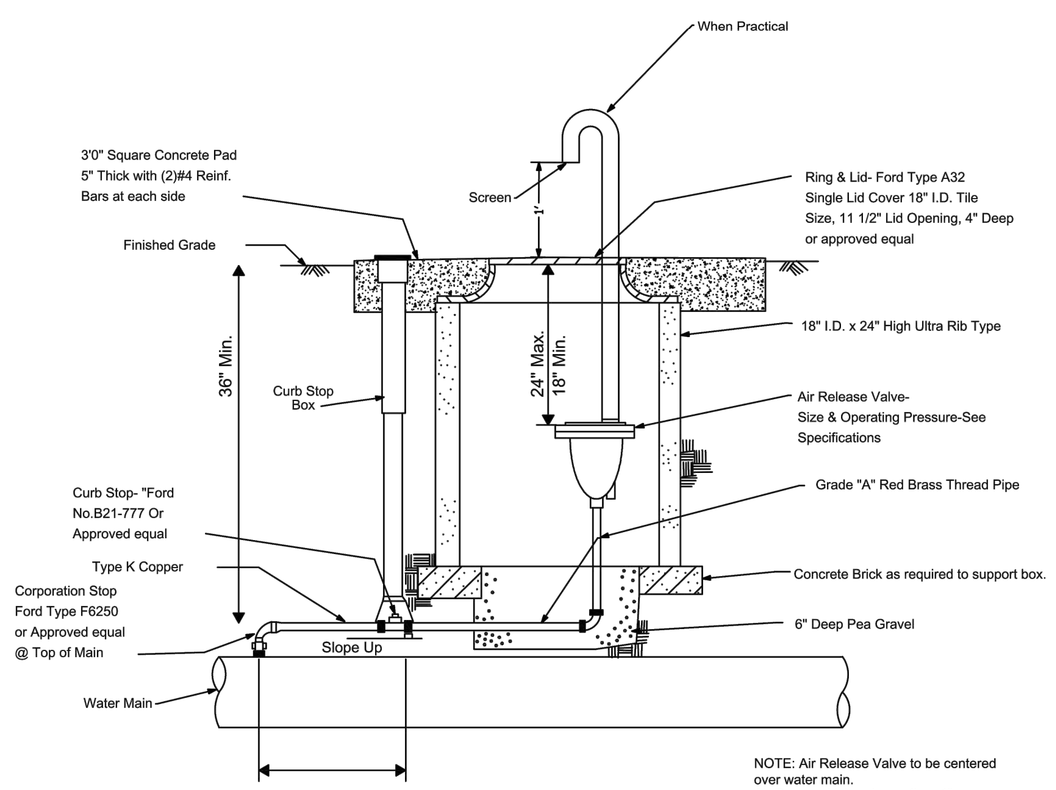

NOTE: Air Release Valve to be centered over water main.
Air Release Valves larger than 1" use:
vault size 24"x24"
lid Ford Type MC 24 &
Extension Ring Ext-2 or approved equal.

REVISION	BY	DATE

N. KY. WATER DISTRICT

N.KY WATER DISTRICT AIR RELEASE VALE

DRAWN BY: SAR

APPROVED: RH

DATE: 8/5/2014

STANDARD DRAWING NO: 106

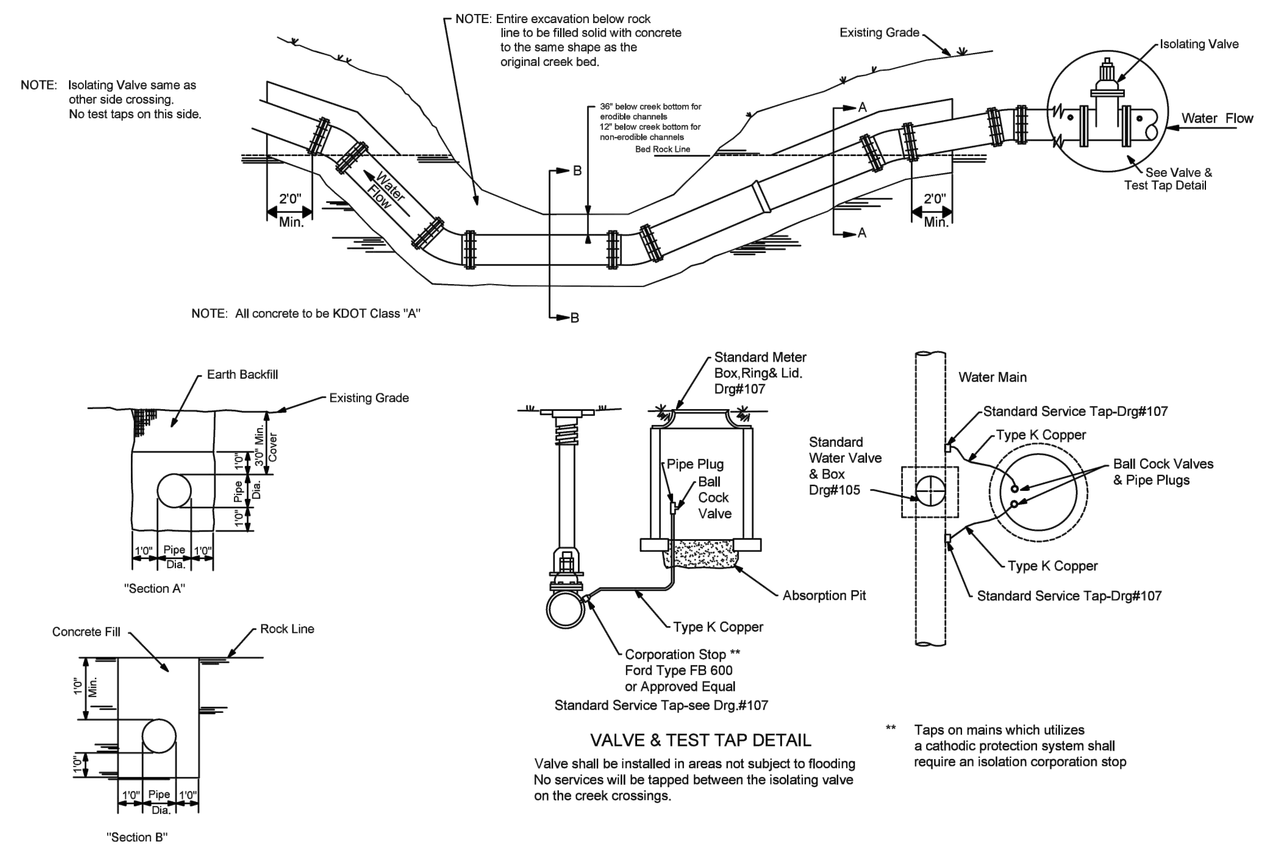

VALVE & TEST TAP DETAIL

Valve shall be installed in areas not subject to flooding
No services will be tapped between the isolating valve on the creek crossings.

** Taps on mains which utilizes a cathodic protection system shall require an isolation corporation stop

REVISION	BY	DATE

N. KY. WATER DISTRICT

CONCRETE ENCASEMENT AT CREEK CROSSING

DRAWN BY: SAR

APPROVED: NKW

DATE: 2/1/2021

STANDARD DRAWING NO: 110

verdantas
2161 CHAMBER CENTER DRIVE
FORT MITCHELL, KENTUCKY 41017
TEL. (859) 525-0544
WWW.VERDANTAS.COM

NO	REVISION	DATE
-	-	-

ISSUED FOR:	BID
ISSUE DATE:	APRIL 2025
SCALE:	AS SHOWN
DESIGNED BY:	JCOR
DRAWN BY:	JCOR
CHECKED BY:	JSHU

NORTHERN KENTUCKY WATER DISTRICT
SUBDISTRICT 'O'
-KENTON COUNTY -

DETAILS

PROJECT NO. 231591

DISCIPLINE CIVIL

SHEET NAME G-03

SHEET 4 OF 28

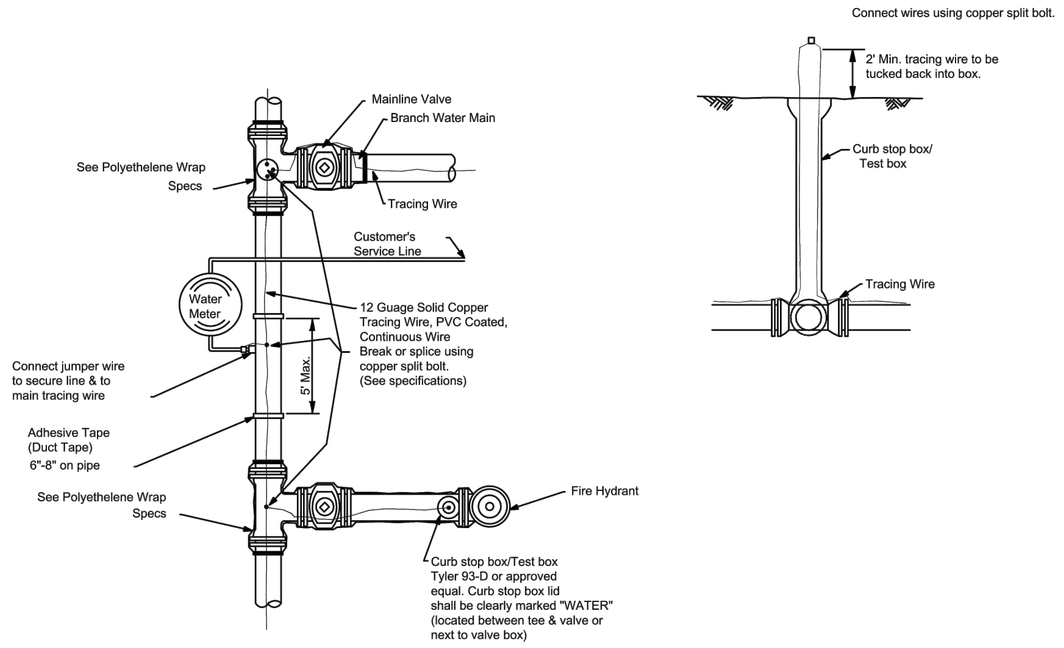

DUCTILE IRON AND PVC PIPE WITH DUCTILE IRON FITTINGS

Note: Curb stop box/test box shall not be installed in paved areas.

REVISION	BY	DATE

N. KY. WATER DISTRICT
TRACING WIRE INSTALLATION DETAIL

DRAWN BY: SAR
APPROVED: RH
DATE: 8/5/2014
STANDARD DRAWING NO: 111

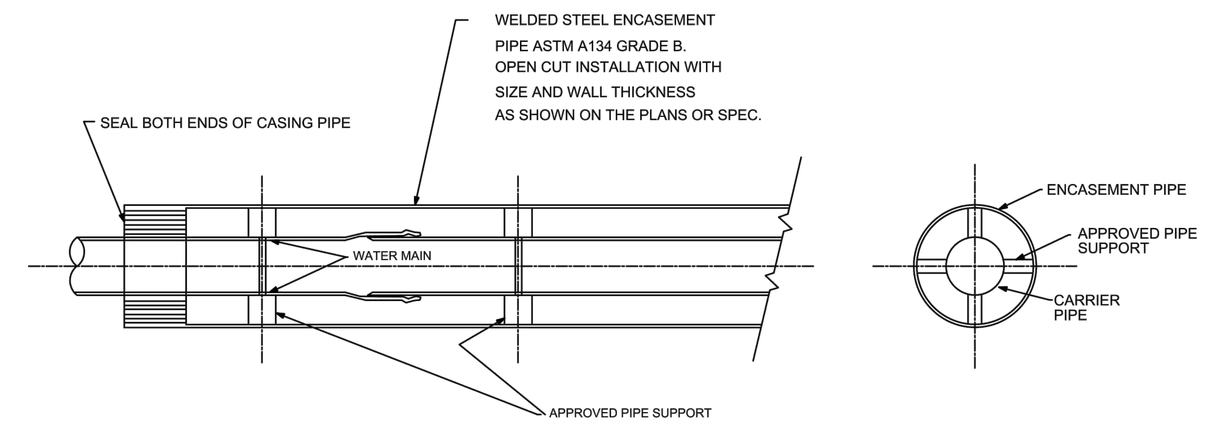

1. All carrier pipe placed in steel casing pipe shall be minimum class 50 ductile iron pipe and conform to the latest edition of AWWA C151.
2. Carrier pipe gaskets shall develop a wedging action between pairs of high-strength stainless steel elements spaced around the gasket (FIELD LOK , FASTGRIP, or approved equal gaskets).

NOTE: CASING PIPE JOINTS SHALL BE SEAM WELDED SO THAT CASING IS WATER TIGHT FROM END TO END.

ENCASEMENT PIPE DETAIL

NO SCALE

REVISION	BY	DATE
1. Remove Detail #8	JS	3/7/00

N. KY. WATER DISTRICT
ENCASEMENT PIPE DETAIL

DRAWN BY: SAR
APPROVED: RH
DATE: 8/5/2014
STANDARD DRAWING NO: 114

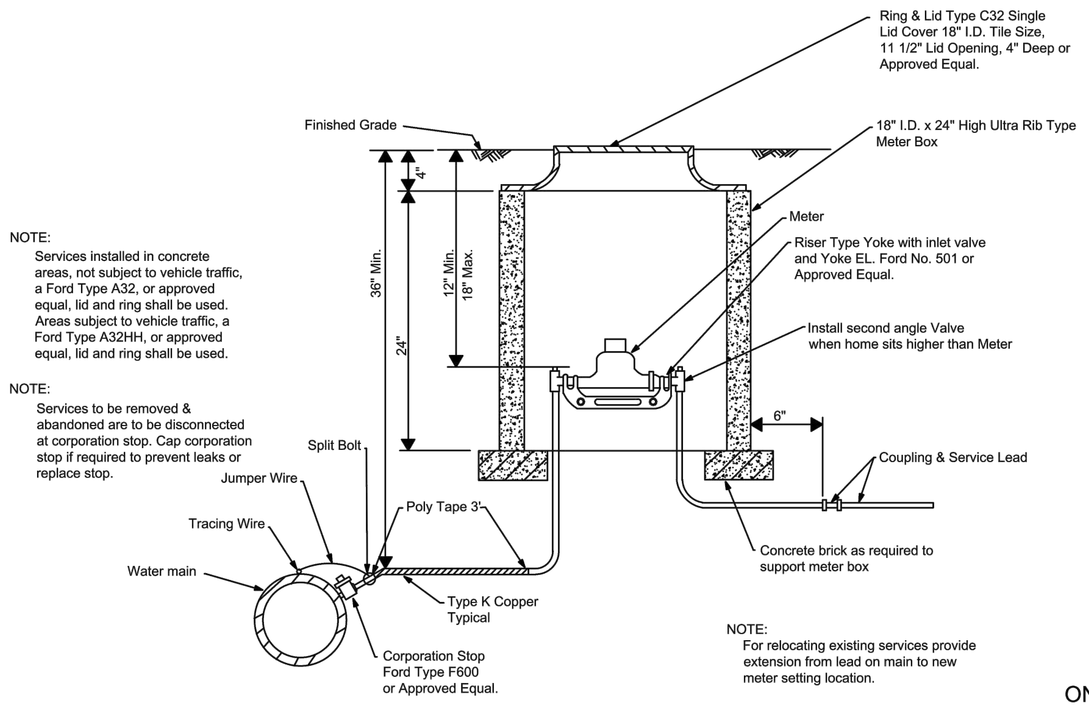

NOTE:
Services installed in concrete areas, not subject to vehicle traffic, a Ford Type A32, or approved equal, lid and ring shall be used. Areas subject to vehicle traffic, a Ford Type A32HH, or approved equal, lid and ring shall be used.

NOTE:
Services to be removed & abandoned are to be disconnected at corporation stop. Cap corporation stop if required to prevent leaks or replace stop.

PVC Mains-Use single band brass saddle Ford Type 101 BS or equal.

NOTE:
For relocating existing services provide extension from lead on main to new meter setting location.

ONLY FOR D.I. PIPE

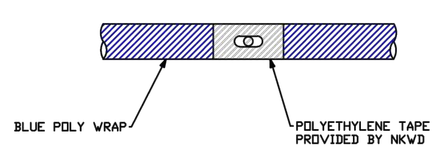

REVISION	BY	DATE

N. KY. WATER DISTRICT
5/8" & 1" METER SETTING COPPER

DRAWN BY: SAR
APPROVED: RH
DATE: 8/5/2014
STANDARD DRAWING NO: 107

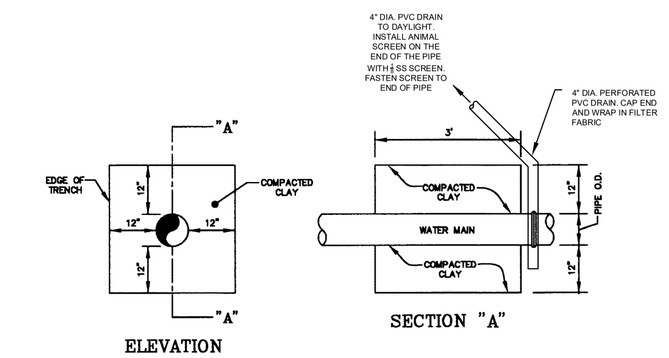

CLAY BULKHEAD

N.T.S.

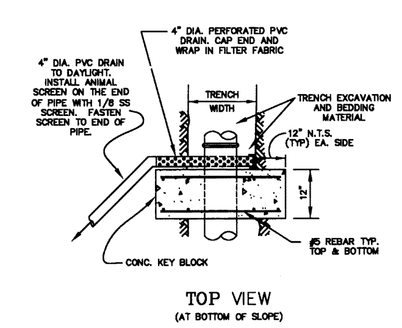

TOP VIEW
(AT BOTTOM OF SLOPE)

NOTE:

1. CONCRETE SHALL HAVE A MINIMUM COMPRESSIVE STRENGTH OF 3,000 PSI @ 28 DAYS
2. KEY BLOCKS SHALL BE LOCATED ON THE BELLS OF THE PIPE
3. KEY BLOCKS SHALL BE 12" THICK

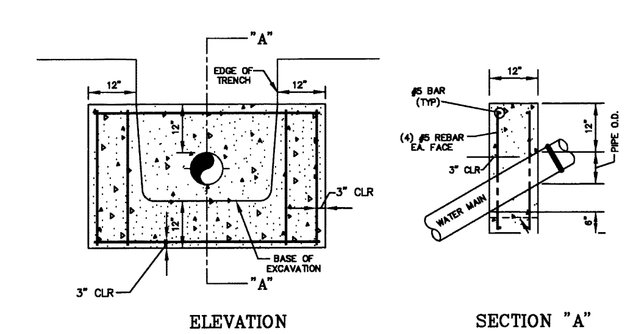

CONCRETE KEY BLOCK

(IN BEDROOCK)
N.T.S.

verdantas
2161 CHAMBER CENTER DRIVE
FORT MITCHELL, KENTUCKY 41017
TEL. (859) 525-0544
WWW.VERDANTAS.COM

NO	REVISION	DATE

ISSUED FOR:	BID
ISSUE DATE:	APRIL 2025
SCALE:	AS SHOWN
DESIGNED BY:	JCOR
DRAWN BY:	JCOR
CHECKED BY:	JSHU

NORTHERN KENTUCKY WATER DISTRICT
SUBDISTRICT 'O'
-KENTON COUNTY -

DETAILS

PROJECT NO. 231591
DISCIPLINE CIVIL
SHEET NAME G-04
SHEET 5 OF 28

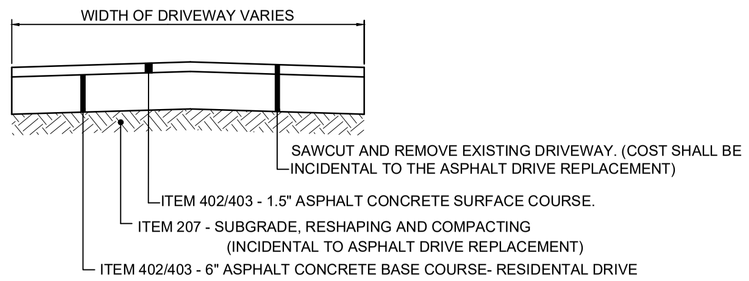

ASPHALT DRIVEWAY REPLACEMENT

N.T.S.

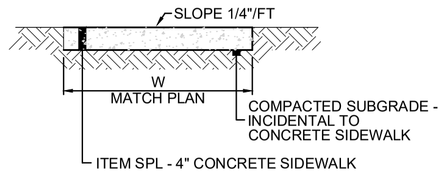

4" CONCRETE SIDEWALK REPLACEMENT DETAIL

(SAWCUTTING AND REMOVAL OF EXISTING CONCRETE SIDEWALK AND EXCAVATION TO PROPOSED SUBGRADE INCIDENTAL TO SIDEWALK REPLACEMENT)

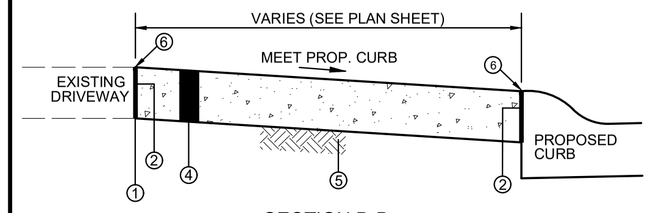

SECTION B-B

1. SAWCUT AT NEAREST JOINT AND REMOVE EXISTING CONCRETE PAVEMENT (INCIDENTAL TO ITEM 505)
2. 1" PREFORMED EXPANSION JOINT MATERIAL (FLEXIBLE FOAM-CERAMAR BY W.R. MEADOWS OR APPROVED EQUAL)
3. TOOLED JOINT
4. ITEM 505 - 6" CONCRETE DRIVEWAY/APRON (OR MATCH EXISTING WHICHEVER IS GREATER)
5. COMPACTED SUBGRADE (INCIDENTAL TO ITEM 505 - 6" CONCRETE DRIVEWAY/APRON)
6. SEAL JOINT WITH GRAY SELF LEVELING SEALANT (SIKA FLEX OR APPROVED EQUAL)

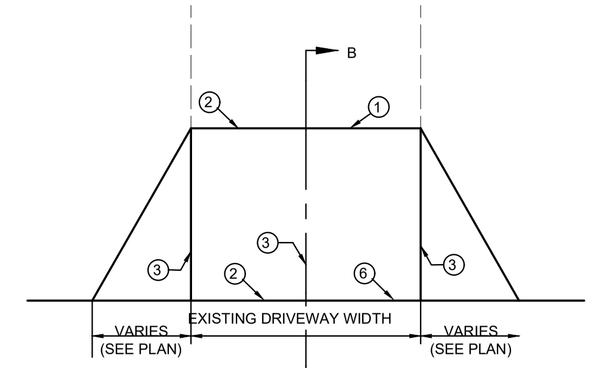

PLAN

NOTE:

1. ANY YARD AREA DISTURBED BY THE CONSTRUCTION OF THE DRIVEWAY APRON SHALL BE RESTORED WITH TOPSOIL, SEED AND MULCH (INCIDENTAL TO CONCRETE DRIVEWAY APRON REPLACEMENT).
2. ALL EXCAVATION REQUIRED FOR THE PLACEMENT OF THE PROPOSED DRIVEWAY SHALL BE INCIDENTAL TO CONCRETE DRIVEWAY REPLACEMENT BID ITEM.

CONCRETE DRIVEWAY REPLACEMENT

N.T.S.

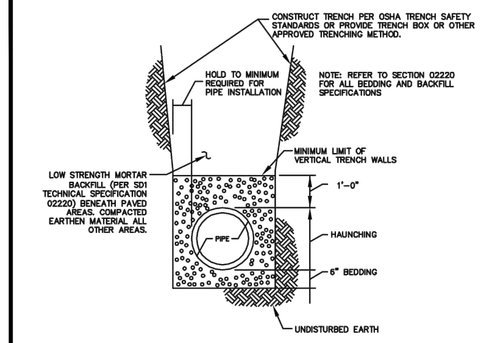

STORM TRENCH DETAIL

N.T.S.

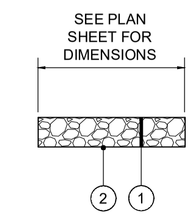

ROCK CHANNEL PROTECTION

N.T.S.

1. ITEM 703 - 18" CHANNEL LINING, KYTC CLASS II
2. NON WOVEN GEOTEXTILE FILTER FABRIC

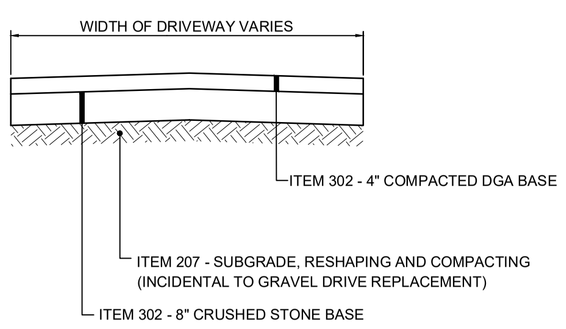

GRAVEL DRIVEWAY REPLACEMENT

N.T.S.

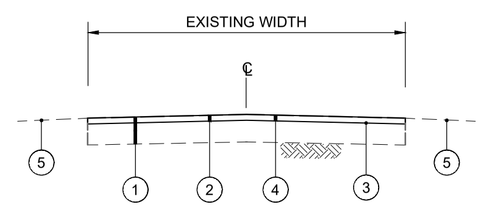

1. EXISTING ASPHALT PAVEMENT
2. ITEM 408 - ASPHALT MILLING (1.5" TYP.)
3. ITEM 406 - TACK COAT @ 0.1 GAL/SY (INCIDENTAL TO ITEM 403)
4. ITEM 402/403 - 1-1/2" ASPHALT PAVEMENT SURFACE
5. DO NOT DISTURB YARD AREA

TYPICAL PAVEMENT RESURFACING SECTION

N.T.S.

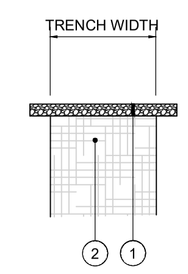

AGGREGATE ROADWAY REPLACEMENT SECTION

N.T.S.

1. ITEM 302 - 4" DGA LIFT OVER 8" CRUSHED STONE BASE, (LESS THAN 7% FINES) COMPACTED TO 100% (ASTM D698).
2. CONTROL DENSITY FILL PER NKWD SPECIFICATIONS (SEE DETAIL SHEET (G-02)

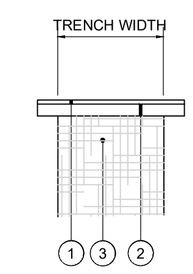

ASPHALT ROADWAY REPLACEMENT SECTION

N.T.S.

1. ITEM 402/403 - 1.5" ASPHALT CONCRETE SURFACE COURSE
2. ITEM 402/403 - 7.75" ASPHALT CONCRETE BASE (OR MATCH EXISTING)
3. CONTROL DENSITY FILL PER NKWD SPECIFICATIONS (SEE DETAIL SHEET (G-02)

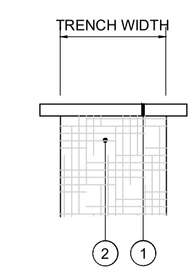

CONCRETE ROADWAY REPLACEMENT SECTION

N.T.S.

1. ITEM SPL - 8" PORTLAND CEMENT CONCRETE PAVEMENT - PER KENTON COUNTY SUBDIVISION REGULATIONS (OR MATCH EXISTING WHICHEVER IS GREATER)
2. CONTROL DENSITY FILL PER NKWD SPECIFICATIONS (SEE DETAIL SHEET (G-02)

NOTE:
GENE STREET HAS AN ADDITIONAL 1.5" ASPHALT OVERLAY ON THE CONCRETE PAVEMENT

verdantas
2161 CHAMBER CENTER DRIVE
FORT MITCHELL, KENTUCKY 41017
TEL. (859) 525-0544
WWW.VERDANTAS.COM

NO	REVISION	DATE
-	-	-

ISSUED FOR:	BID
ISSUE DATE:	APRIL 2025
SCALE:	AS SHOWN
DESIGNED BY:	JCOR
DRAWN BY:	JCOR
CHECKED BY:	JSHU

NORTHERN KENTUCKY WATER DISTRICT
SUBDISTRICT 'O'
-KENTON COUNTY -

DETAILS

PROJECT NO. 231591

DISCIPLINE CIVIL

SHEET NAME G-05

SHEET 6 OF 28

SEDIMENT BASINS

DEFINITION
A TEMPORARY BARRIER OR DAM CONSTRUCTED ACROSS A WATERCOURSE OR AT OTHER SUITABLE LOCATION TO RETAIN SEDIMENT AND OTHER WATERBORNE DEBRIS.

SCOPE
THIS STANDARD ESTABLISHES MINIMUM ACCEPTABLE QUALITY FOR THE DESIGN AND CONSTRUCTION OF TEMPORARY SEDIMENT BASINS FORMED BY AN EMBANKMENT, EXCAVATION OR A COMBINATION OF EMBANKMENT AND EXCAVATION. THE STANDARD IS LIMITED TO SITES WHERE:

1. FAILURE OF THE STRUCTURE WOULD NOT RESULT IN LOSS OF LIFE; DAMAGE TO HOMES; COMMERCIAL OR INDUSTRIAL BUILDINGS; DAMAGE TO HIGHWAYS OR RAILROADS OR INTERRUPTION OF USE OR SERVICE OF PRIVATE UTILITIES.
2. THE HEIGHT OF DAM IS 25 FEET OR LESS, AS MEASURED FROM THE NATURAL STREAMBED AT THE CENTERLINE OF DAM TO THE TOP OF DAM.
3. THE TOTAL VOLUME OF STORAGE IS 150 ACRE-FEET OR LESS.
4. THE DRAINAGE AREA IS 100 ACRES OR LESS.
5. THE BASIN WILL BE REMOVED WITHIN A THREE-YEAR PERIOD AFTER CONSTRUCTION.

PURPOSE
TEMPORARY SEDIMENT BASINS ARE USED AS A MEANS OF TRAPPING AND STORING SEDIMENT FROM ERODING AREAS IN ORDER TO PROTECT DOWNSTREAM AREAS FROM DAMAGE RESULTING FROM SEDIMENTATION AND WATERBORNE DEBRIS.

CONDITIONS WHERE PRACTICE APPLIES
TEMPORARY SEDIMENT BASINS APPLY WHERE PHYSICAL SITE CONDITIONS OR OTHER RESTRICTIONS PRECLUDE THE INSTALLATION OF EROSION CONTROL MEASURES TO ADEQUATELY CONTROL EROSION AND SEDIMENTATION. IT MAY BE USED DOWNSLOPE FROM CONSTRUCTION OPERATIONS WHICH EXPOSE AREAS TO EROSION. TEMPORARY SEDIMENT BASINS WILL BE REMOVED AFTER THE EXPOSED AREAS ARE ADEQUATELY PROTECTED AGAINST EROSION BY VEGETATIVE OR MECHANICAL MEANS.

COMPLIANCE WITH LAWS AND REGULATIONS
DESIGN AND CONSTRUCTION SHALL COMPLY WITH ALL LOCAL LAWS, ORDINANCES, RULES AND REGULATIONS.

LOCATION
TO IMPROVE THE EFFECTIVENESS OF THE BASIN, IT SHOULD BE LOCATED SO AS TO INTERCEPT THE LARGEST POSSIBLE AMOUNT OF RUNOFF FROM THE DISTURBED AREA. THE BEST LOCATIONS ARE GENERALLY LOW AREAS AND NATURAL DRAINAGEWAYS BELOW DISTURBED AREAS. DRAINAGE INTO THE BASIN CAN BE IMPROVED BY THE USE OF DIVERSION DIKES AND DITCHES. THE BASIN MUST NOT BE LOCATED IN A LIVE STREAM BUT SHOULD BE LOCATED TO TRAP SEDIMENT-LADEN RUNOFF BEFORE IT ENTERS THE STREAM. THE BASIN SHOULD NOT BE LOCATED WHERE ITS FAILURE WOULD RESULT IN THE LOSS OF LIFE OR IN INTERRUPTION OF THE USE OR SERVICE OF PUBLIC UTILITIES OR ROADS.

MULTIPLE USE
SEDIMENT BASINS MAY BE DESIGNED AS PERMANENT STRUCTURES TO REMAIN IN PLACE AFTER CONSTRUCTION IS COMPLETED. SITE CONDITIONS MAY MAKE THE USE OF THESE STRUCTURES DESIRABLE FOR STORMWATER DETENTION PURPOSES. WHEREVER THESE STRUCTURES ARE TO BECOME PERMANENT, OR IF THEY EXCEED THE SIZE LIMITATIONS OF THE DESIGN CRITERIA, THEY MUST BE DESIGNED AS PERMANENT PONDS BY A QUALIFIED PROFESSIONAL ENGINEER. PERMANENT PONDS ARE BEYOND THE SCOPE OF THESE STANDARDS AND SPECIFICATIONS. THE PERMANENT STRUCTURES MUST BE SUBMITTED WITH CONSTRUCTION DRAWINGS FOR REVIEW AND ACCEPTANCE BY THE CITY ENGINEER.

MAINTENANCE BASINS SHALL BE CHECKED WEEKLY AND CLEANED WHEN NO LONGER EFFECTIVE.

STORM DRAIN INLET PROTECTION
DEFINITION
A SEDIMENT FILTER INSTALLED AROUND A STORM DRAIN INLET OR CURB INLET TO REDUCE SEDIMENT DISCHARGE.

PURPOSE
TO PREVENT SEDIMENT FROM ENTERING THE STORM DISCHARGE SYSTEMS PRIOR TO PERMANENT STABILIZATION OF THE DISTURBED DRAINAGE AREA. DIFFERENT TYPES OF STRUCTURES ARE APPLICABLE TO DIFFERENT CONDITIONS.

STORM WATER POLLUTION PREVENTION NOTES

1. SANITATION DISTRICT NO. 1 IS TO BE CONTACTED 72 HOURS PRIOR TO ANY CONSTRUCTION ACTIVITY AT 859-578-6892
2. ALL EROSION AND SEDIMENTATION CONTROL SHALL BE PERFORMED AS SHOWN ON THE PLANS, AND SHALL BE IN COMPLIANCE WITH THE LATEST CONSTRUCTION ACTIVITY " NATIONAL POLLUTANT DISCHARGE ELIMINATION SYSTEM" RULES AND REGULATIONS.
3. A COPY OF THE STORM WATER POLLUTION PREVENTION PLAN (SWPPP) AND A COPY OF THE "NOTICE OF INTENT" (NOI) SHALL BE KEPT ON SITE.
4. AN AMENDMENT OF THE SWPPP IS REQUIRED WHENEVER A CHANGE IN DESIGN, CONSTRUCTION, AND OPERATION OR MAINTENANCE HAS A SIGNIFICANT EFFECT ON THE POTENTIAL FOR THE DISCHARGE OF POLLUTANTS, OR IF THE SWPPP PROVES TO BE INEFFECTIVE IN ACHIEVING THE GENERAL OBJECTIVES OF THE SWPPP.
5. THE CONTRACTOR SHALL ALSO MAINTAIN THE FOLLOWING RECORDS ON SITE:
   A. GENERAL CONTRACTOR AND/OR SUBCONTRACTOR SWPPP CERTIFICATIONS
   B. THE DATE, TIME, AND EXACT LOCATION OF THE INSPECTION, AND THE NAME OF THE INSPECTOR
   C. AN ASSESSMENT OF THE CONDITION OF THE EROSION CONTROLS
   D. A DESCRIPTION OF ANY EROSION CONTROL IMPLEMENTATION AND MAINTENANCE PERFORMED
   E. A DESCRIPTION OF THE PRESENT PHASE OF CONSTRUCTION AT THE SITE
6. CONSTRUCTION SEQUENCE
   - ALL PERIMETER SILT FENCE, INLET PROTECTION AND OTHER EROSION CONTROLS SHALL BE IN PLACE BEFORE ANY OTHER EARTH MOVING ACTIVITIES BEGIN.
   - THE CONTRACTOR SHALL CLEAR AND GRUB ONLY THE AREAS PLANNED FOR EARTH MOVING.
   - REMOVE TOPSOIL, STOCKPILE IT, AND INSTALL SILT FENCE AROUND PERIMETER.
   - SEED SOIL STOCKPILE WITH PERENNIAL RYE GRASS AND MULCH WITH STRAW IF NO TO BE DISTURBED FOR MORE THAN 21 DAYS.
   - INSTALL STORM INLET AND CULVERT PROTECTION IMPACTED BY WATER MAIN CONSTRUCTION.
   - ESTABLISH A TEMPORARY SEEDING ON ALL BARE AREAS THAT ARE TO REMAIN UNDISTURBED FOR MORE THAN 21 DAYS. SEED WITH PERENNIAL RYE GRASS MULCH WITH STRAW.
   - IMMEDIATE AFTER TOPSOIL HAS BEEN PLACED, STABILIZE THE SAME SURFACE AREA WITH FINAL SEED AND MULCH 7 DAYS AFTER REACHING FINAL GRADE.
   - AFTER THE VEGETATION HAS BECOME WELL ESTABLISHED, REMOVE TEMPORARY EROSION OR SEDIMENT CONTROL PRACTICES.
7. EROSION CONTROLS MUST BE INSPECTED ONCE EVERY 7 DAYS AND WITHIN 24 HOURS OF 0.5" OR GREATER RAINFALL. REMOVE ACCUMULATED SEDIMENT FROM EROSION CONTROLS.
8. TEMPORARY SEEDING SHALL BE PERENNIAL RYE GRASS (40 LB / ACRED) AND MULCH AT 3 BALES OF STRAW PER 1000 S.F.
9. CONTRACTOR IS RESPONSIBLE FOR OBTAINING BORROW MATERIAL ONSITE AND / OR DISPOSING OF EXCESS MATERIAL OFF SITE AS REQUIRED TO MEET INDICATED DESIGN ELEVATIONS.
10. DEBRIS SHALL BE COLLECTED WITHIN PROPERTY LIMITS WEEKLY OR AS NEEDED FOR PUBLIC SAFETY. SURROUNDING STREETS AFFECTED BY THE CONSTRUCTION SHALL BE CLEANED DAILY OR AS NEEDED FOR PUBLIC SAFETY. SEE CONSTRUCTION ENTRANCE DETAIL IN SWPPP DETAILS SHEET.
11. THE CONSTRUCTION OF BMPs SHALL BE REVISED OR ADDED IF DEEMED NECESSARY PER SECTION 1000 OF THE SANITATION DISTRICT 1 REGULATIONS.
12. CONTACT SANITATION DISTRICT NO. 1 72 HOURS PRIOR TO INSTALLATION OF THE WATER QUALITY FEATURE.

NOTES:
1) SUBSOILING SHALL OCCUR WHEN SOIL MOISTURE IS LOW ENOUGH TO ALLOW THE SOIL TO CRACK OR FRACTURE. SUBSOILING IS NOT PERMITTED ON SLIP-PRONE AREAS.
2) THE SITE SHALL BE GRADED TO PERMIT THE USE OF CONVENTIONAL EQUIPMENT FOR SEEDBED PREPARATION AND SEEDING.
3) TOPSOIL SHALL BE APPLIED WHERE NEEDED TO ESTABLISH VEGETATION.
4) THE SEEDBED SHALL BE PREPARED BY APPLYING AGRICULTURAL GROUND LIMESTONE OR FERTILIZER AS RECOMMENDED BY A SOIL TEST. IN LIEU OF A SOIL TEST, APPLY LIME AT 2 TONS/AC. OR FERTILIZER AT 500 LB/AC. OF 10-10-10 OR 12-12-12 ANALYSIS. LIME AND FERTILIZER SHALL BE WORKED INTO THE SOIL TO A DEPTH OF 3".
5) APPLY SEED UNIFORMLY ON FIRM, MOIST SEED BED.
6) SEEDING SHOULD BE APPLIED FROM MARCH 1 TO MAY 31 OR AUGUST 1 TO SEPTEMBER 30. IF SEEDING OCCURS OUTSIDE OF THESE DATES, ADDITIONAL MULCH AND IRRIGATION MAY BE REQUIRED TO ENSURE A MINIMUM OF 80% GERMINATION. TILLAGE FOR SEEDBED PREPARATION SHALL OCCUR WHEN THE SOIL IS DRY ENOUGH TO CRUMBLE AND NOT FORM RIBBONS WHEN COMPRESSED BY HAND.
7) SEEDING SHOULD NOT BE APPLIED FROM OCTOBER 1 TO NOVEMBER 20 BECAUSE SEEDS MAY GERMINATE, BUT WILL NOT SURVIVE THE WINTER. USE THE FOLLOWING METHODS FOR DORMANT SEEDING:
   - FROM OCTOBER 1 TO NOVEMBER 20, INCREASE THE SEEDING RATE BY 50%, PREPARE THE SEED BED, ADD LIME AND FERTILIZER, MULCH AND ANCHOR.
   - FROM NOVEMBER 20 TO MARCH 15, ONLY IF SOIL CONDITIONS PERMIT, INCREASE THE SEEDING RATE BY 50%, PREPARE THE SEED BED, ADD LIME AND FERTILIZER, APPLY THE SEED MIXTURE, MULCH AND ANCHOR.
8) APPLY MULCH MATERIAL IMMEDIATELY AFTER SEEDING.
9) PERMANENT SEEDING SHALL INCLUDE IRRIGATION TO ESTABLISH VEGETATION DURING DRY OR HOT WEATHER OR ON ADVERSE SITE CONDITIONS AS NEEDED. AVOID EXCESSIVE IRRIGATION AND MONITOR TO PREVENT EROSION AND DAMAGE FROM RUNOFF.
10) PERMANENT SEEDING SHALL NOT BE CONSIDERED ESTABLISHED FOR AT LEAST 1 FULL YEAR FROM THE TIME OF PLANTING. DURING THIS PERIOD, INSPECT FOR SOIL EROSION OR PLANT LOSS AND REPAIR BARE OR SPARSE AREAS, FILL GULLIES, RE-FERTILIZE, RE-SEED OR RE-MULCH AS NEEDED.
11) A MINIMUM OF 70% GROWTH DENSITY, BASED ON A VISUAL INSPECTION, MUST EXIST FOR AN ADEQUATE PERMANENT VEGETATIVE PLANTING.

PERMANENT SEEDING FERTILIZATION AND MOWING CHART				
MIXTURE	FORMULA	LB/ AC.	TIME	MOW
CREEPING RED FESCUE DOMESTIC RYEGRASS KENTUCKY BLUEGRASS	10-10-10	500	FALL, YEARLY, OR AS NEEDED	≥3"
TALL FESCUE	10-10-10	500		≥4"
TURF-TYPE FESCUE	10-10-10	500		
CROWN VETCH FESCUE	0-20-20	400	SPRING, AND YEARLY AFTER ESTABLISHED	DO NOT MOW
FLAT PEA FESCUE	0-20-20	400		

PERMANENT SEEDING SPECIES SELECTION		
SEED MIX	SEED RATE LB/AC.	NOTES:
GENERAL USE		
CREEPING RED FESCUE DOMESTIC RYEGRASS KENTUCKY BLUEGRASS	20 - 40 10 - 20 20 - 40	FOR CLOSE MOWING AND WATERWAYS WITH ≤2.0 FT./SEC. VELOCITY
TALL FESCUE	40 - 50	
TURF-TYPE FESCUE	90	
STEEP BANKS OR CUT SLOPES		
TALL FESCUE	40 - 50	
CROWN VETCH TALL FESCUE	10 - 20 20 - 30	DO NOT SEED LATER THAN AUGUST
FLAT PEA TALL FESCUE	20 - 25 20 - 30	DO NOT SEED LATER THAN AUGUST
ROAD DITCHES AND SWALES		
TALL FESCUE	40 - 50	
TURF-TYPE FESCUE KENTUCKY BLUEGRASS	90 5	
LAWN		
KENTUCKY BLUEGRASS PERENNIAL RYEGRASS	100 - 120 100 - 120	
KENTUCKY BLUEGRASS CREEPING RED FESCUE	100 - 120 100 - 120	FOR SHADED AREAS

PERMANENT SEEDING DETAIL
SCALE: NONE

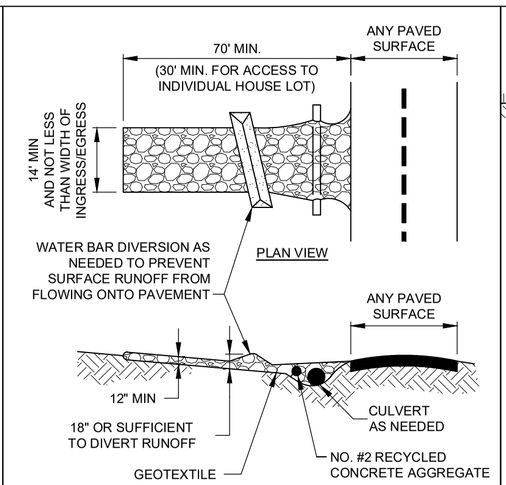

NOTES:
1. PLACE GEOTEXTILE OVER THE ENTIRE AREA PRIOR TO PLACING STONE MEETING THE MIN. SPECIFICATIONS:
   A. TENSILE STRENGTH = 200 LBS.
   B. PUNCTURE STRENGTH = 80 PSI
   C. TEAR STRENGTH = 50 LBS.
   D. BURST STRENGTH = 320 PSI
   E. ELONGATION = 20%
   F. EQUIVALENT OPENING SIZE ≤ 0.6 MM
   G. PERMITTIVITY = 0.001 CM/SEC
2. APPLY ADDITIONAL STONE AS CONDITIONS DEMAND AND REPLENISH STONE WHEN THE DEPTH IS LESS THAN 6". REMOVE AND REPLACE IF STONES BECOMES MUD-LADEN.
3. IMMEDIATELY REMOVE MUD DROPPED, WASHED OR TRACKED ONTO ROADS OR ANY SURFACE WHERE RUNOFF IS NOT CHECKED BY SEDIMENT CONTROLS BY SCRAPING OR SWEEPING.
4. CONSTRUCTION ENTRANCES SHALL NOT BE RELIED UPON TO REMOVE MUD FROM VEHICLES OR TO PREVENT OFF-SITE TRACKING. VEHICLES THAT ENTER AND LEAVE THE CONSTRUCTION SITE SHALL BE RESTRICTED FROM MUDDY AREAS.

CE **CONSTRUCTION ENTRANCE**
SCALE: NONE

NOTES:
1) THE SEED BED SHALL BE PULVERIZED AND LOOSE TO ENSURE THE SUCCESS OF ESTABLISHING VEGETATION.
2) SOIL AMENDMENTS MAY BE REQUIRED TO ESTABLISH ADEQUATE VEGETATION. PERFORM SOIL TESTS ON THE SITE TO PREDICT THE NEED FOR LIME AND FERTILIZER.
3) APPLY SEED UNIFORMLY. COVER BROADCASTED SEED BY RAKING OR DRAGGING AND THEN LIGHTLY TAMPING INTO PLACE.
4) APPLY MULCHING IMMEDIATELY AFTER SEEDING.
5) SEEDING SHALL BE INSPECTED FOR BARE SPOTS AND WASHOUTS, AND RESEEDED AS NECESSARY.

TEMPORARY SEEDING SPECIES SELECTION			
DATES	SPECIES	LB/1,000 SF	LB/AC.
MARCH 1 TO AUGUST 15	OATS TALL FESCUE PERENNIAL RYEGRASS	3 1 1	128 40 40
	PERENNIAL RYEGRASS TALL FESCUE	2 1	40 40
AUGUST 16 TO NOVEMBER 1	RYE TALL FESCUE PERENNIAL RYEGRASS	3 1 1	112 40 40
	WHEAT TALL FESCUE PERENNIAL RYEGRASS	3 1 1	120 40 40
	PERENNIAL RYEGRASS TALL FESCUE	2 1	40 40
NOVEMBER 1 TO SPRING	ONLY MULCH OR DORMANT SEEDING.		

TEMPORARY SEEDING DETAIL
SCALE: NONE

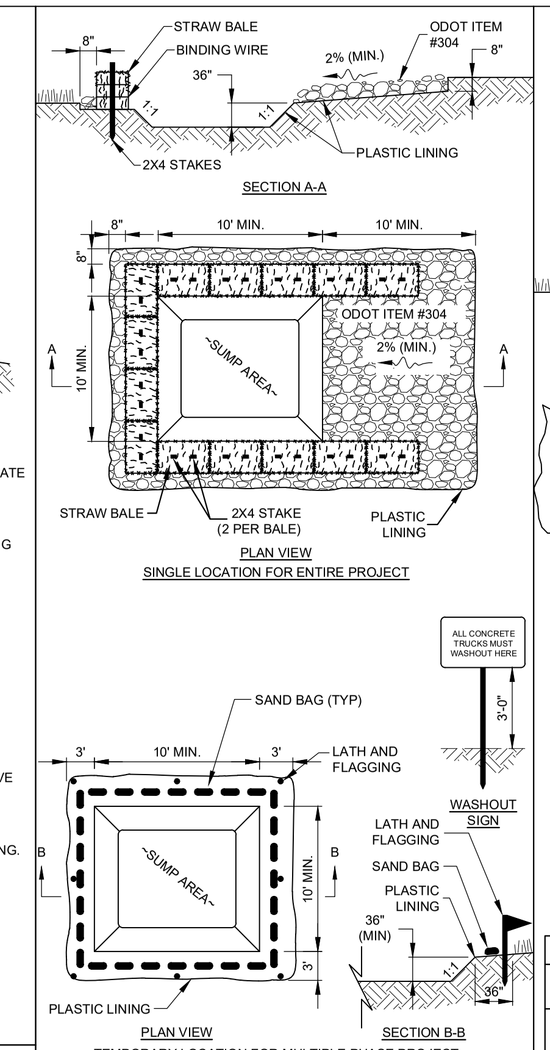

NOTES:
1. WASHOUT PIT SHALL BE LOCATED 100' MINIMUM FROM INLETS, STREAMS, WETLANDS AND ANY OTHER SURFACE WATERS.
2. ALL EXCESS CONCRETE AND CONCRETE WASHOUT, INCLUDING FROM HAND MIXERS AND LIGHT EQUIPMENT, SHALL BE DISPOSED OF IN THE CONCRETE WASHOUT AREA. DISPOSAL OF EXCESS CONCRETE OR CONCRETE WASHOUT ON THE GROUND, OR IN STORM DRAINS, DITCHES OR WATER BODIES, IS PROHIBITED.
3. CONCRETE WASHOUT AREA SHALL BE SUFFICIENT SIZE TO CONTAIN CONCRETE WASTE GENERATED. FOR LARGER SITES, MULTIPLE CONCRETE WASHOUT AREAS MAY BE REQUIRED.
4. IF CONCRETE WASHOUT AREA IS LOCATED AWAY FROM A PAVED SURFACE, CONSTRUCT A GRAVEL ACCESS ROUTE EQUAL IN COMPOSITION TO THE CONSTRUCTION ENTRANCE.
5. PLASTIC LINING SHALL BE DOUBLE-LINED, CONTINUOUS 10-MIL POLYETHYLENE SHEETING FREE OF HOLES, TEARS OR OTHER DEFECTS, AND INSTALLED ON A SMOOTH, LEVEL SURFACE, FREE OF ROCKS OR DEBRIS.
6. CONCRETE WASHOUT SIGNAGE SHALL BE CLEARLY VISIBLE AND LOCATED WITHIN 30 FEET OF EACH WASHOUT AREA.
7. CONCRETE WASHOUT AREAS SHALL BE COVERED DURING INCLEMENT WEATHER TO PREVENT OVERFLOWS.
8. PREFABRICATED, PORTABLE AND RE-USABLE CONCRETE WASHOUT CONTAINERS ARE ACCEPTABLE, BUT MUST BE SPECIFICALLY DESIGNED FOR CONCRETE WASHOUT USE.
9. CONCRETE WASHOUT AREA SHALL BE INSPECTED DAILY TO CHECK FOR DAMAGE AND TO DETERMINE IF IT NEEDS CLEANED OR REPLACED. ANY DAMAGE TO THE SIDEWALLS OR POLYETHYLENE SHEETING SHALL BE REPAIRED IMMEDIATELY. THE CONCRETE WASHOUT AREA SHALL BE CLEANED OR REPLACED WHEN IT IS 75% FULL. THE POLYETHYLENE SHEETING SHALL BE REPLACED AFTER EACH CLEANING.
10. SAW CUT CONCRETE, RESIDUE FROM SAW CUT, AND GRINDINGS SHALL BE DISPOSED OF IN THE WASHOUT PIT.

WA **CONCRETE WASHOUT DETAIL**
SCALE: NONE

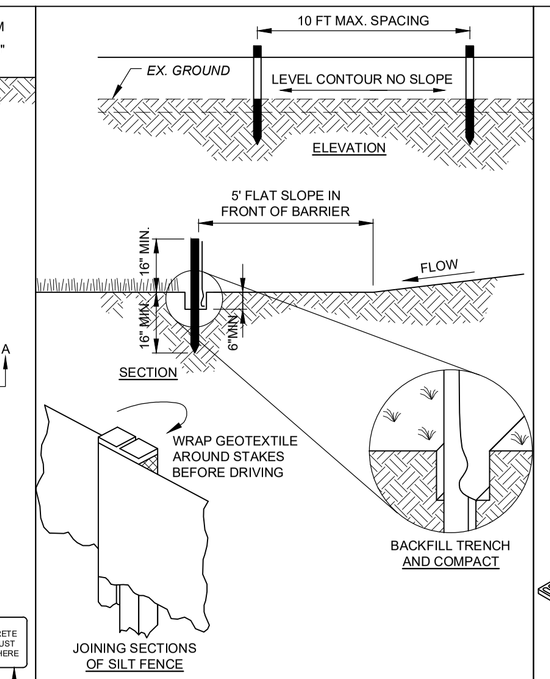

NOTES:
1. PRESERVE VEGETATION FOR 5 FEET, OR AS MUCH AS POSSIBLE, UPSLOPE FROM THE SILT FENCE. IF VEGETATION IS REMOVED, IT SHALL BE RE-ESTABLISHED WITHIN 7 DAYS FROM SILT FENCE INSTALLATION.
2. SILT FENCE SHALL ALLOW RUNOFF TO PASS ONLY AS DIFFUSE FLOW THROUGH THE GEOTEXTILE. PERFORM ONE OF THE FOLLOWING IF RUNOFF OVERTOPS THE SILT FENCE, FLOWS UNDER OR AROUND THE ENDS, OR IN ANY OTHER WAY BECOMES A CONCENTRATED FLOW:
   - CHANGE THE LAYOUT OF THE SILT FENCE.
   - REMOVE ACCUMULATED SEDIMENT.
   - INSTALL OTHER PRACTICES.

FABRIC PROPERTIES	VALUES	TEST METHOD
GRAB TENSILE STRENGTH	90 LB. MIN	ASTM D-1682
MULLEN BURST STRENGTH	190 PSI MIN	ASTM D-3786
SLURRY FLOW RATE	0.3 GAL./MIN./S.F. MAX.	
EQUIVALENT OPENING SIZE	40-80	US STD. SIEVE CW-02215
ULTRAVIOLET RADIATION STABILITY	90% MIN	ASTM-G-26

SF **SILT FENCE**
—— SF ——
SCALE: NONE

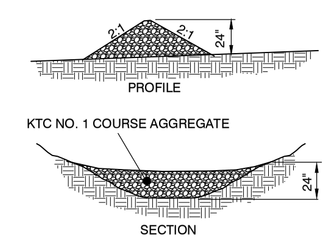

CD **CHECK DAM**
N.T.S.

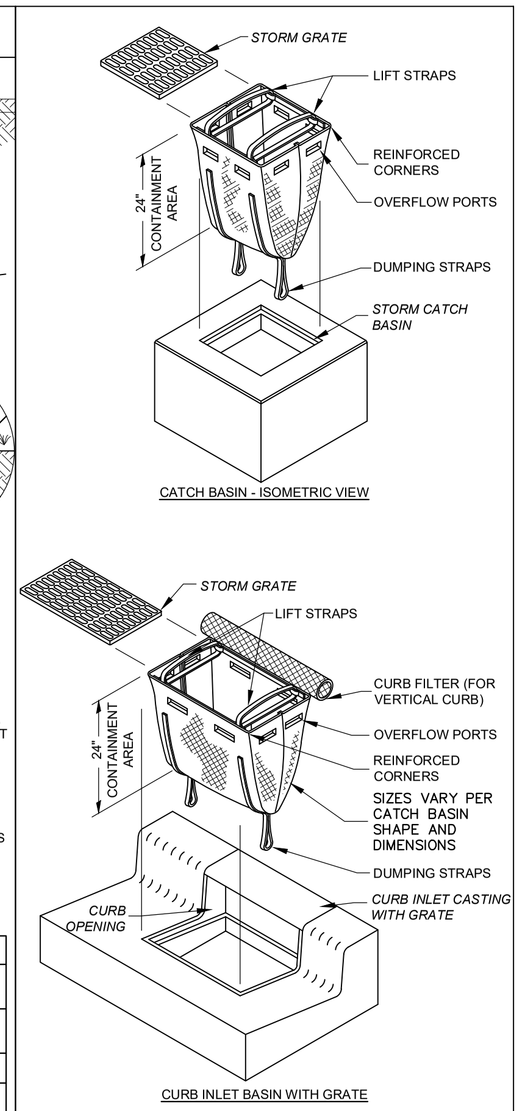

IP **STORM DRAIN INLET PROTECTION DETAIL**
SCALE: NONE

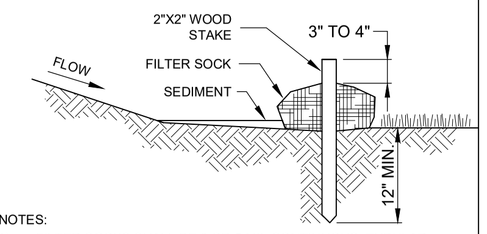

NOTES:
1) FILTER SOCKS SHALL BE 3 OR 5 MIL CONTINUOUS, TUBULAR, HDPE 3/8" KNITTED MESH NETTING MATERIAL, FILLED WITH COMPOST.
2) COMPOST SHALL BE WEED, PATHOGEN AND INSECT FREE, FREE OF ANY REFUSE, CONTAMINANTS OR OTHER MATERIALS TOXIC TO PLANT GROWTH, BE DERIVED FROM A WELL-DECOMPOSED SOURCE OF ORGANIC MATTER, AND CONSIST OF PARTICLES RANGING FROM 3/8" TO 2".
3) FILTER SOCKS SHALL BE PLACED ON A LEVEL LINE ACROSS SLOPES PARALLEL TO THE BASE OF THE SLOPE.
4) FILTER SOCKS SHALL BE PLACED AT LEAST 5' FROM THE TOE OF SLOPE FOR SEDIMENT DEPOSIT.
5) BUILT UP SEDIMENT SHALL BE REMOVED WHEN IT HAS REACHED 1/3 THE FILTER SOCK HEIGHT.
6) WHEN A FILTER SOCK IS NO LONGER REQUIRED, IT SHALL BE DISPERSED ON-SITE.
7) THE MAXIMUM DRAINAGE AREA PER 100 FEET OF FILTER SOCK IS 1/2 ACRE AND IS DEPENDENT ON THE SLOPE:

MAX. SLOPE LENGTH ABOVE FILTER SOCK					
SLOPE	RATIO (H:V)	8"	12"	18"	24"
0% - 2%	0 - 50:1	125'	250'	300'	350'
2% - 10%	50:1 - 10:1	100'	125'	200'	250'
10% - 20%	10:1 - 5:1	75'	100'	150'	200'

FILTER SOCK DETAIL
SCALE: NONE

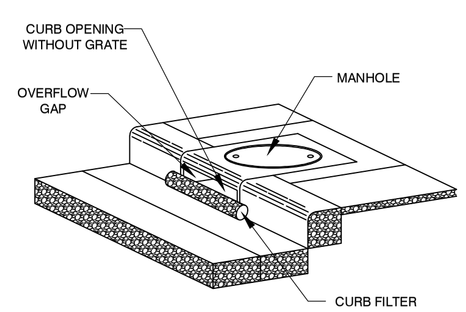

DETAIL OF CURB INLET SEDIMENT CONTROL DEVICE WITH CURB FILTER

IP **DANDY CURB**
SCALE: NONE

verdantas
2161 CHAMBER CENTER DRIVE
FORT MITCHELL, KENTUCKY 41017
TEL. (859) 525-0544
WWW.VERDANTAS.COM

NO	REVISION	DATE

ISSUED FOR:	BID
ISSUE DATE:	APRIL 2025
SCALE:	AS SHOWN
DESIGNED BY:	JCOR
DRAWN BY:	JCOR
CHECKED BY:	JSHU

NORTHERN KENTUCKY WATER DISTRICT
SUBDISTRICT 'O'
-KENTON COUNTY -

EROSION CONTROL DETAILS

PROJECT NO.	
231591	
DISCIPLINE	
CIVIL	
SHEET NAME	
G-06	
SHEET	OF
7	28

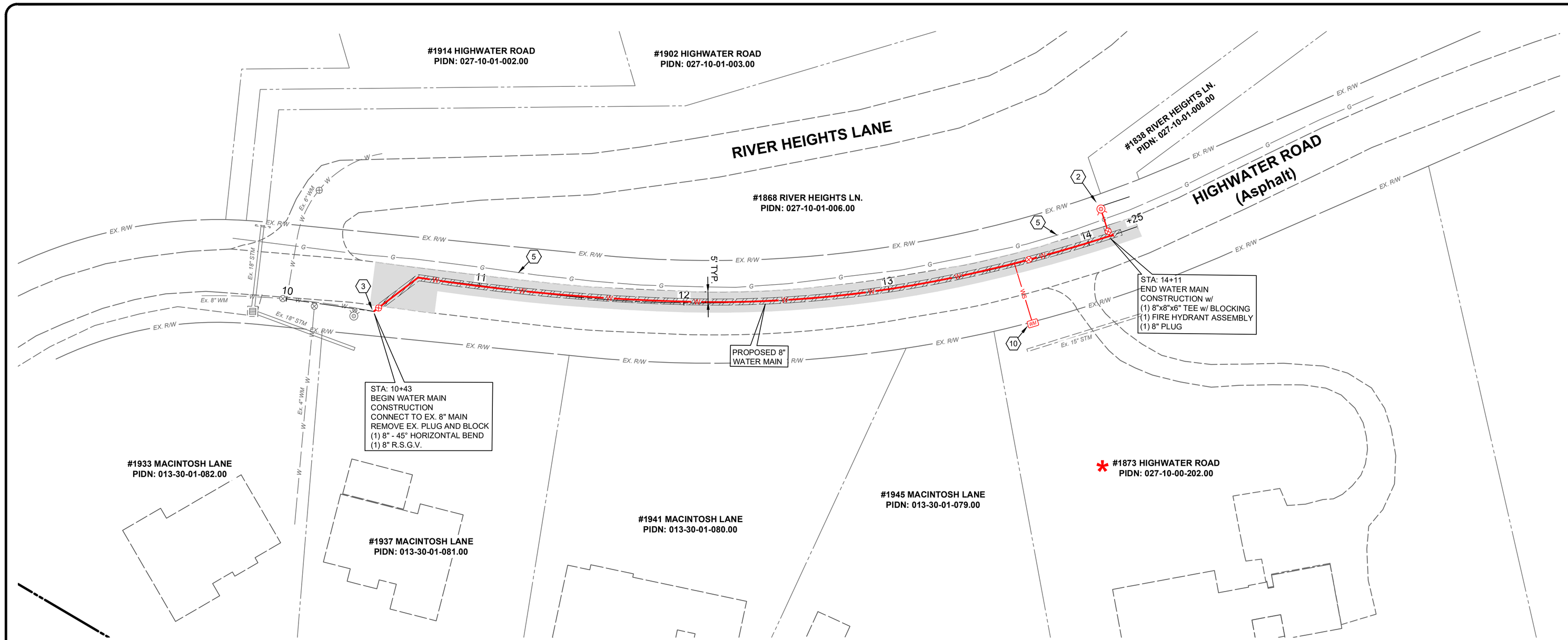

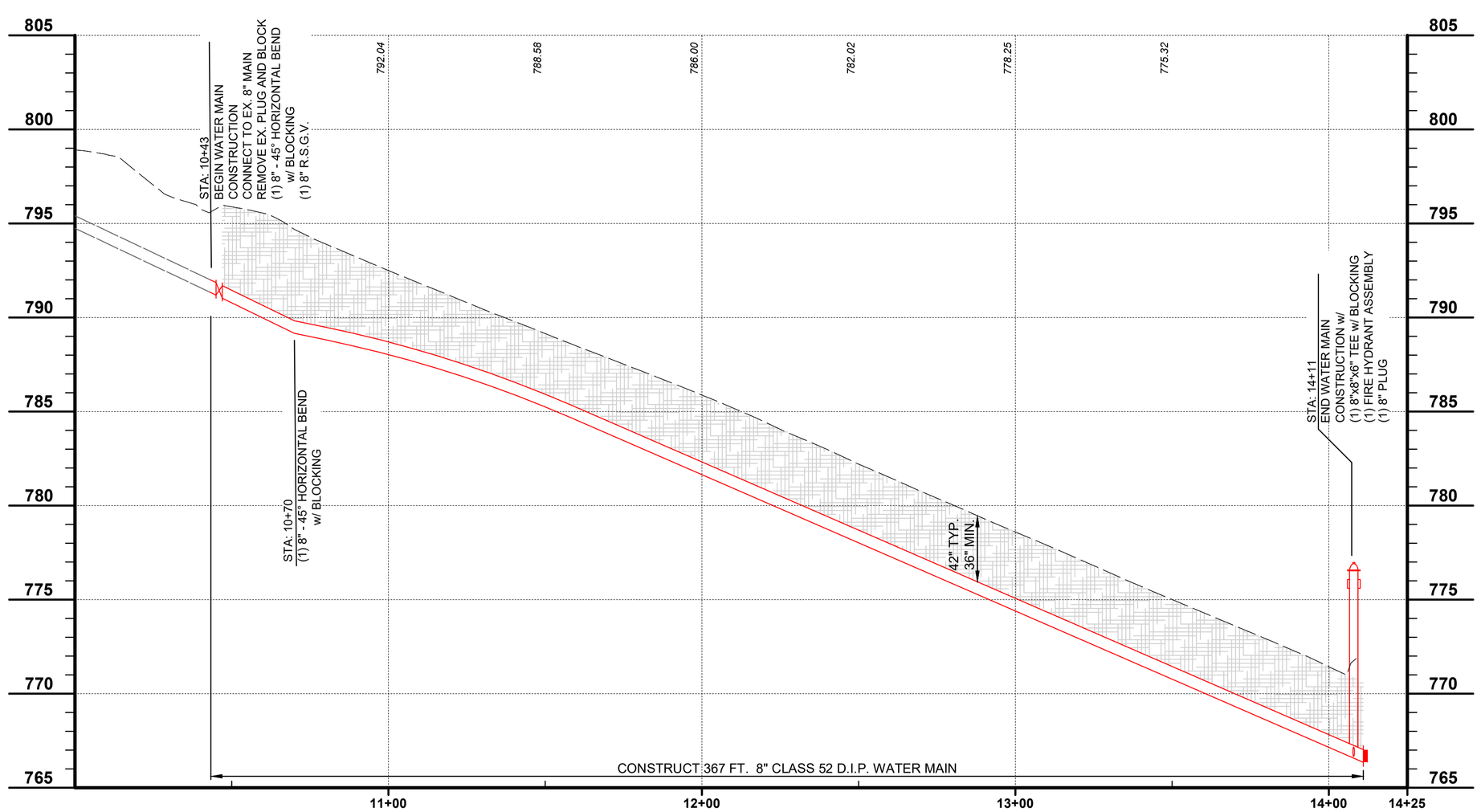

SCALE:
H: 1" = 30'
V: 1" = 5'

0' 30' 60'
SCALE: 1" = 30'

CONSTRUCTION NOTES

1. MAINTAIN MANAGEABLE VERTICAL CLEARANCE BETWEEN THE PROPOSED WATER MAIN AND THE EXISTING STORM SEWER, WATER MAIN, TELEPHONE DUCTS, AND GAS MAIN. CONSTRUCT ALL SANITARY SEWER CROSSINGS PER N.K.W.D. SPECIFICATIONS ITEM 1.14. MAINTAIN MINIMUM 18" BETWEEN THE PROPOSED WATER MAIN AND THE EXISTING SANITARY SEWER, ACTUAL ELEVATION UNKNOWN. CONTRACTOR TO EXCAVATE & VERIFY ACTUAL LOCATION, SIZE AND ELEVATION OF EXISTING UTILITY PRIOR TO BEGINNING WATER MAIN CONSTRUCTION. THE CONTRACTOR SHALL NOTIFY THE ENGINEER PRIOR TO CONSTRUCTION OF ANY POTENTIAL CONFLICT. NO ADDITIONAL PAYMENT WILL BE MADE FOR THIS WORK AND THE COST SHALL BE INCLUDED IN THE BID ITEM FOR WATER MAIN.
2. PROPOSED FIRE HYDRANT ASSEMBLY, VALVE AND BLOCKING AS PER N.K.W.D. STD. DRAWING NO. 109. COORDINATE LOCATION WITH N.K.W.D. INSPECTOR. ANCHOR VALVE TO TEE.
3. CONNECT TO EXISTING WATER MAIN (ACTUAL ELEVATION UNKNOWN). CONTRACTOR TO VERIFY DEPTH PRIOR TO CONSTRUCTION.
4. CHANNEL LINING, CLASS II (18") w/ NON-WOVEN GEOTEXTILE FILTER FABRIC
5. CONTRACTOR TO VERIFY LOCATION AND ELEVATION OF UTILITY PRIOR TO EXCAVATION ACTIVITY AND NOTIFY ENGINEER AND N.K.W.D. OF CONFLICTS. (** SEE NOTE)
6. DO NOT DISTURB
7. CONTRACTOR TO SUPPORT UTILITY POLE DURING PIPE INSTALLATION (** SEE NOTE)
8. REMOVE AND REPLACE SIGN (** SEE NOTE)
9. REMOVE AND REPLACE MAILBOX (** SEE NOTE)
10. INSTALL 5/8" METER SETTING PER NKWD STD. DWG. No. 107. INSTALL WATER SERVICE LINE (3/4" TYPE K COPPER) FROM THE PROPOSED WATER MAIN TO THE METER SETTING. MATERIAL WILL BE PROVIDED BY NKWD FOR THIS WORK. UNIT PRICE INCLUDES LABOR, EQUIPMENT, EXCAVATION, BEDDING, BACKFILL, ASPHALT, CONCRETE AND YARD RESTORATION TO INSTALL SERVICE LINE AS SHOWN ON PLANS OR DIRECTED BY NKWD IN ACCORDANCE WITH SPECS & STD. DWGS., COMPLETE.
11. REMOVE & REPLACE STORM STRUCTURE (CB,HW) AS NEEDED FOR WATER MAIN INSTALLATION (** SEE NOTE)
12. DRIVEWAY RESTORATION (SEE DETAILS)
13. TREE TO BE REMOVED

**** NOTE:**

WORK FOR THIS ITEM SHALL BE CONSIDERED INCIDENTAL TO THE OVERALL PROJECT AND NO ADDITIONAL PAYMENT SHALL BE MADE FOR THIS WORK. COST SHALL BE INCLUDED IN THE BID ITEM FOR WATER MAIN.

HATCH LEGEND

- 1-1/2" ASPHALT PAVEMENT MILL AND OVERLAY AREA
- TRENCH RESTORATION - ASPHALT PAVEMENT - SEE DETAIL SHEET
- TRENCH RESTORATION - CONCRETE PAVEMENT - SEE DETAIL SHEET
- TRENCH RESTORATION - 8" AGGREGATE PAVEMENT
- CONTROL DENSITY FILL - PAV'T TRENCH
- CONCRETE DRIVEWAY REPLACEMENT - SEE DETAIL SHEET
- CONCRETE WALK REPLACEMENT - SEE DETAIL SHEET
- ASPHALT DRIVEWAY REPLACEMENT - SEE DETAIL SHEET
- GRAVEL DRIVEWAY REPLACEMENT - SEE DETAIL SHEET
- CHANNEL LINING, CLASS II - SEE DETAIL SHEET
- * DENOTES PROPERTY WITH NEW SERVICE AND METER SETTING

verdantas
2161 CHAMBER CENTER DRIVE
FORT MITCHELL, KENTUCKY 41017
TEL. (859) 525-0544
WWW.VERDANTAS.COM

NO	REVISION	DATE
-	-	-

ISSUED FOR:	BID
ISSUE DATE:	APRIL 2025
SCALE:	AS SHOWN
DESIGNED BY:	JCOR
DRAWN BY:	JCOR
CHECKED BY:	JSHU

NORTHERN KENTUCKY WATER DISTRICT
SUBDISTRICT 'O'
-KENTON COUNTY -

HIGHWATER ROAD

PROJECT NO. 231591
DISCIPLINE: CIVIL
SHEET NAME: C-01
SHEET 8 OF 28

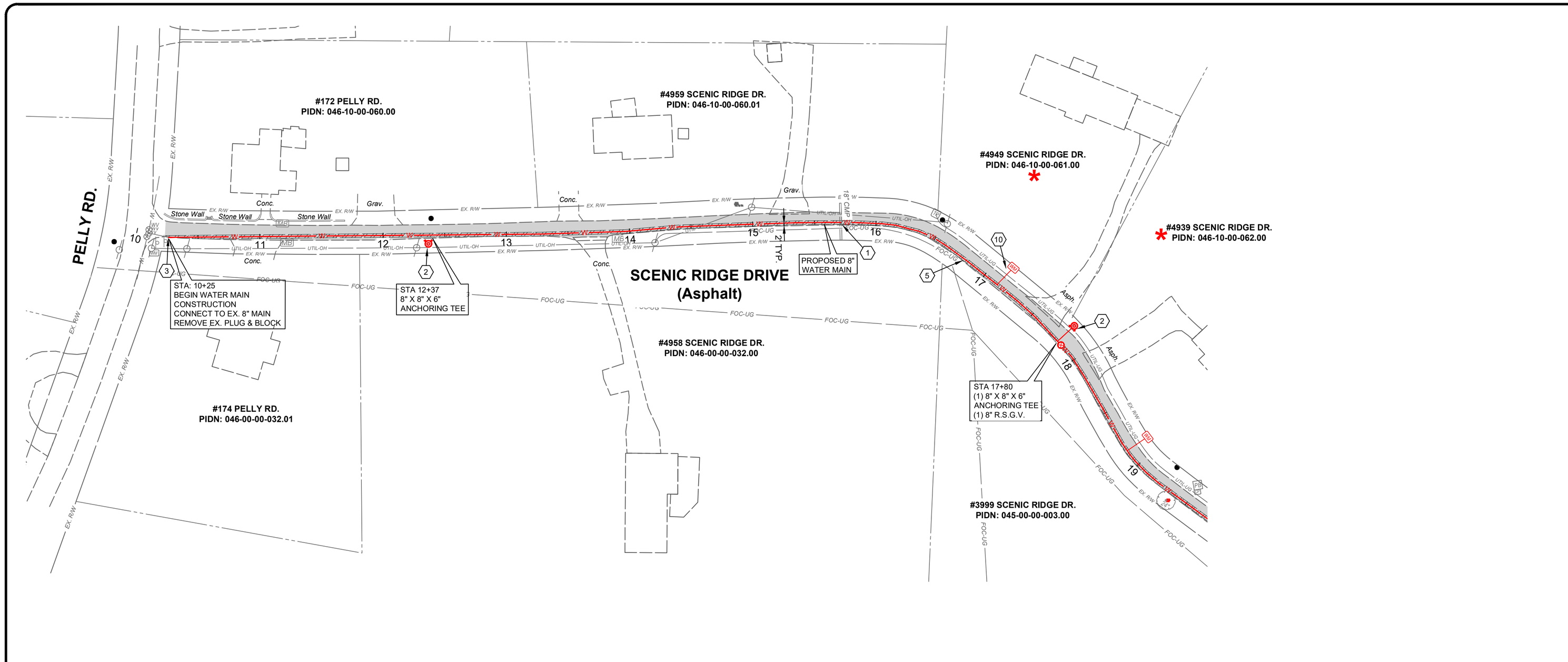

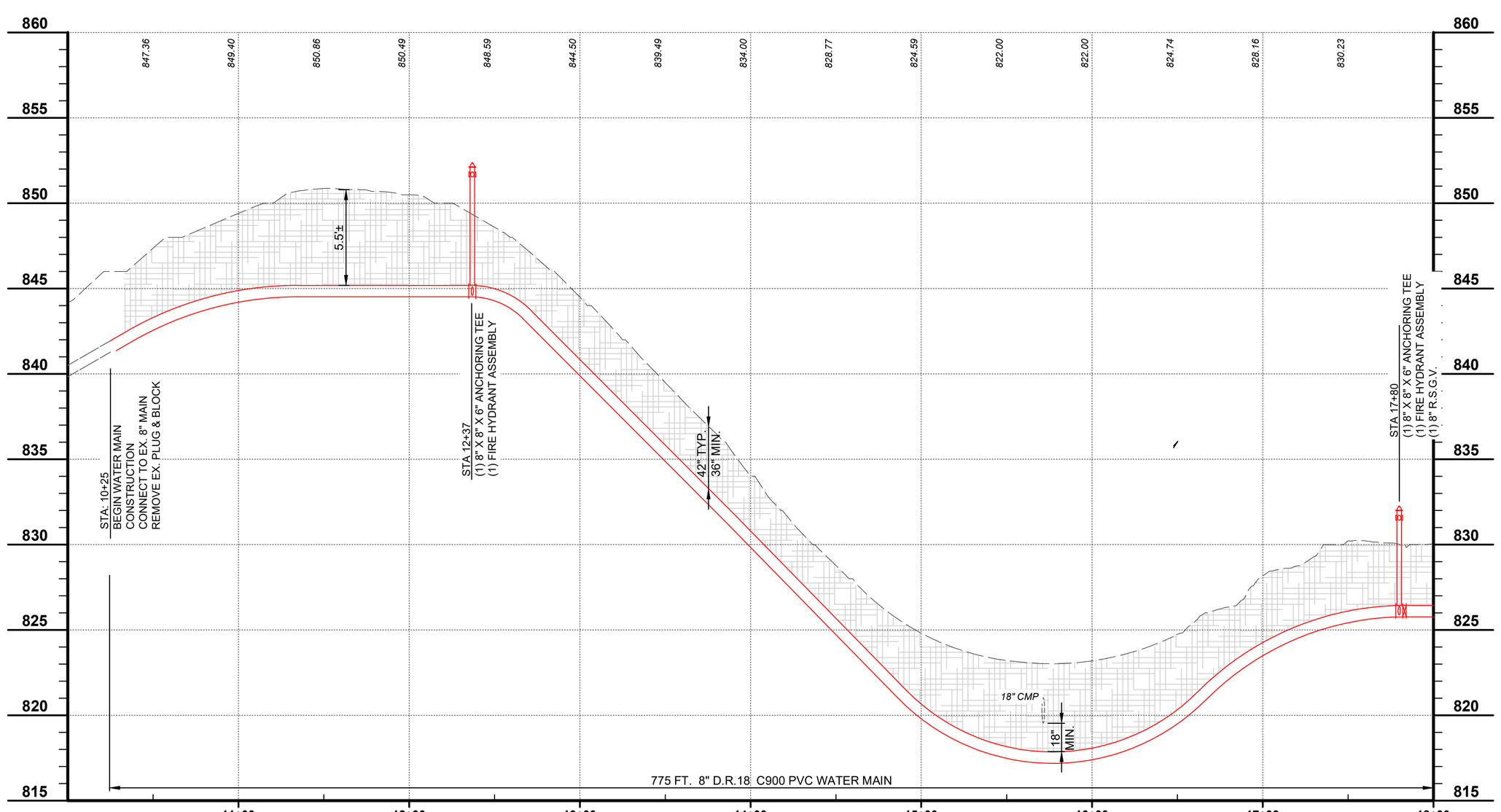

SCALE:
H: 1" = 50'
V: 1" = 5'

0' 50'' 100'
SCALE: 1" = 50

CONSTRUCTION NOTES

1. MAINTAIN MANAGEABLE VERTICAL CLEARANCE BETWEEN THE PROPOSED WATER MAIN AND THE EXISTING STORM SEWER, WATER MAIN, TELEPHONE DUCTS, AND GAS MAIN. CONSTRUCT ALL SANITARY SEWER CROSSINGS PER N.K.W.D. SPECIFICATIONS ITEM 1.14. MAINTAIN MINIMUM 18" BETWEEN THE PROPOSED WATER MAIN AND THE EXISTING SANITARY SEWER, ACTUAL ELEVATION UNKNOWN. CONTRACTOR TO EXCAVATE & VERIFY ACTUAL LOCATION, SIZE AND ELEVATION OF EXISTING UTILITY PRIOR TO BEGINNING WATER MAIN CONSTRUCTION. THE CONTRACTOR SHALL NOTIFY THE ENGINEER PRIOR TO CONSTRUCTION OF ANY POTENTIAL CONFLICT. NO ADDITIONAL PAYMENT WILL BE MADE FOR THIS WORK AND THE COST SHALL BE INCLUDED IN THE BID ITEM FOR WATER MAIN.
2. PROPOSED FIRE HYDRANT ASSEMBLY, VALVE AND BLOCKING AS PER N.K.W.D. STD. DRAWING NO. 109. COORDINATE LOCATION WITH N.K.W.D. INSPECTOR. ANCHOR VALVE TO TEE.
3. CONNECT TO EXISTING WATER MAIN (ACTUAL ELEVATION UNKNOWN). CONTRACTOR TO VERIFY DEPTH PRIOR TO CONSTRUCTION.
4. CHANNEL LINING, CLASS II (18") w/ NON-WOVEN GEOTEXTILE FILTER FABRIC
5. CONTRACTOR TO VERIFY LOCATION AND ELEVATION OF UTILITY PRIOR TO EXCAVATION ACTIVITY AND NOTIFY ENGINEER AND N.K.W.D. OF CONFLICTS. (** SEE NOTE)
6. DO NOT DISTURB
7. CONTRACTOR TO SUPPORT UTILITY POLE DURING PIPE INSTALLATION (** SEE NOTE)
8. REMOVE AND REPLACE SIGN (** SEE NOTE)
9. REMOVE AND REPLACE MAILBOX (** SEE NOTE)
10. INSTALL 5/8" METER SETTING PER NKWD STD. DWG. No. 107. INSTALL WATER SERVICE LINE (3/4" TYPE K COPPER) FROM THE PROPOSED WATER MAIN TO THE METER SETTING. MATERIAL WILL BE PROVIDED BY NKWD FOR THIS WORK. UNIT PRICE INCLUDES LABOR, EQUIPMENT, EXCAVATION, BEDDING, BACKFILL, ASPHALT, CONCRETE AND YARD RESTORATION TO INSTALL SERVICE LINE AS SHOWN ON PLANS OR DIRECTED BY NKWD IN ACCORDANCE WITH SPECS & STD. DWGS., COMPLETE.
11. REMOVE & REPLACE STORM STRUCTURE (CB,HW) AS NEEDED FOR WATER MAIN INSTALLATION (** SEE NOTE)
12. DRIVEWAY RESTORATION (SEE DETAILS)
13. TREE TO BE REMOVED

**** NOTE:**

WORK FOR THIS ITEM SHALL BE CONSIDERED INCIDENTAL TO THE OVERALL PROJECT AND NO ADDITIONAL PAYMENT SHALL BE MADE FOR THIS WORK. COST SHALL BE INCLUDED IN THE BID ITEM FOR WATER MAIN.

HATCH LEGEND

- 1-1/2" ASPHALT PAVEMENT MILL AND OVERLAY AREA
- TRENCH RESTORATION - ASPHALT PAVEMENT - SEE DETAIL SHEET
- TRENCH RESTORATION - CONCRETE PAVEMENT - SEE DETAIL SHEET
- TRENCH RESTORATION - 8" AGGREGATE PAVEMENT
- CONTROL DENSITY FILL - PAV'T TRENCH
- CONCRETE DRIVEWAY REPLACEMENT - SEE DETAIL SHEET
- CONCRETE WALK REPLACEMENT - SEE DETAIL SHEET
- ASPHALT DRIVEWAY REPLACEMENT - SEE DETAIL SHEET
- GRAVEL DRIVEWAY REPLACEMENT - SEE DETAIL SHEET
- CHANNEL LINING, CLASS II - SEE DETAIL SHEET
- * DENOTES PROPERTY WITH NEW SERVICE AND METER SETTING

verdantas
2161 CHAMBER CENTER DRIVE
FORT MITCHELL, KENTUCKY 41017
TEL. (859) 525-0544
WWW.VERDANTAS.COM

NO	REVISION	DATE
-	-	-

ISSUED FOR:	BID
ISSUE DATE:	APRIL 2025
SCALE:	AS SHOWN
DESIGNED BY:	JCOR
DRAWN BY:	JCOR
CHECKED BY:	JSHU

NORTHERN KENTUCKY WATER DISTRICT
SUBDISTRICT 'O'
-KENTON COUNTY -

SCENIC RIDGE DRIVE
STA. 10+25 TO STA. 18+00

PROJECT NO. 231591
DISCIPLINE CIVIL
SHEET NAME C-02
SHEET 9 OF 28

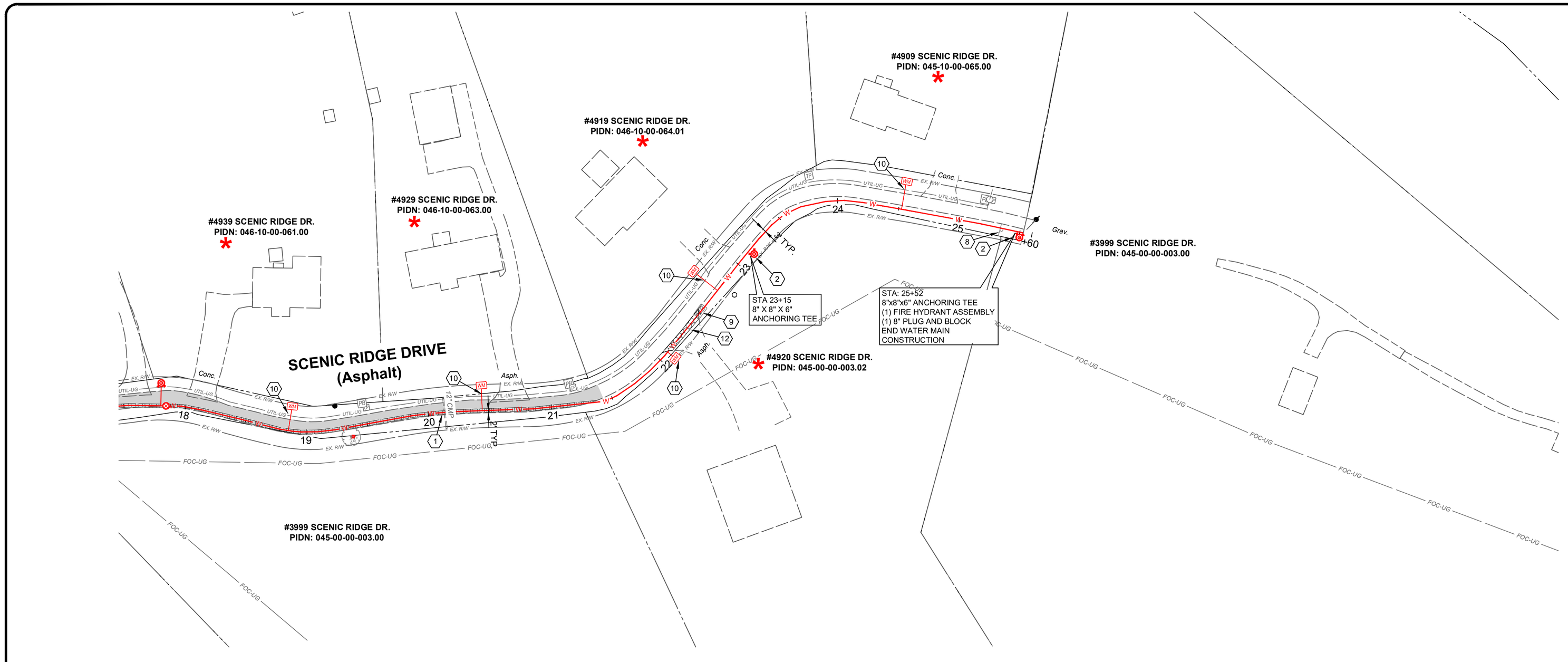

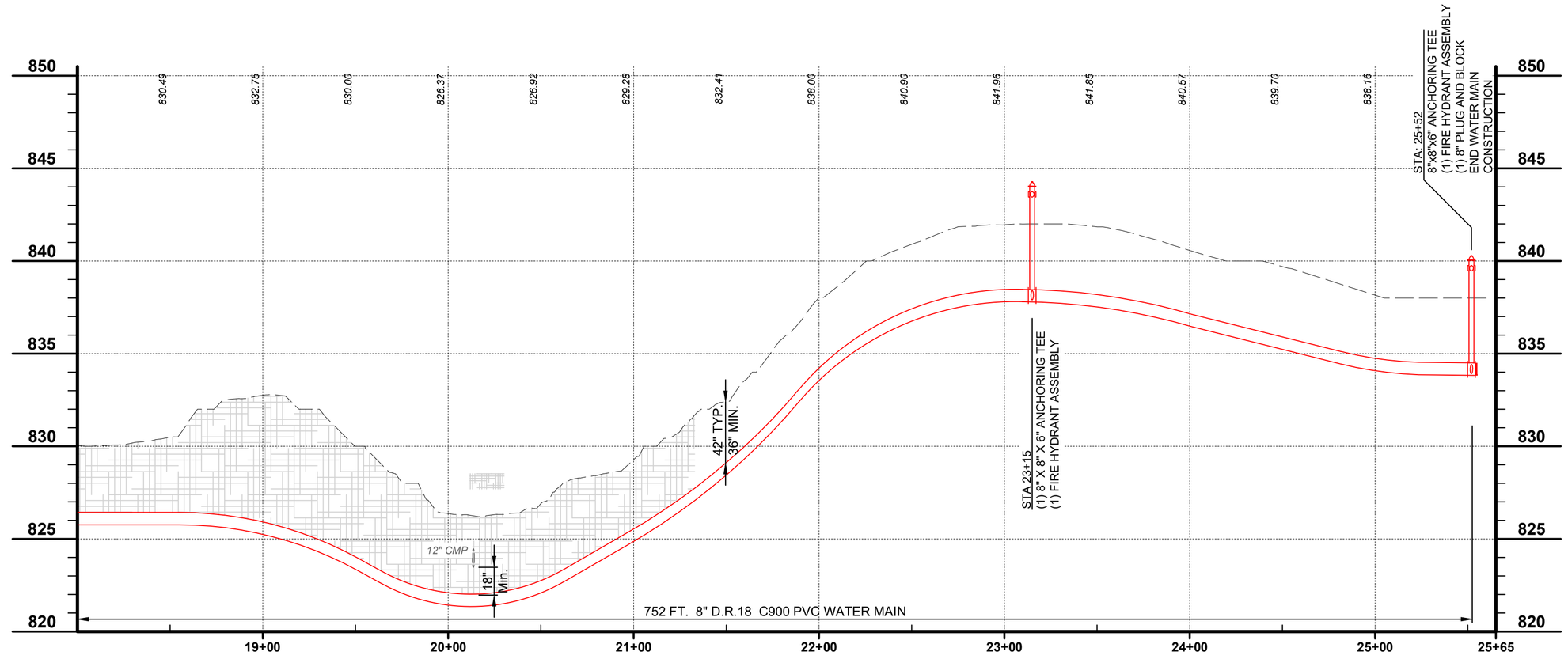

SCALE:
H: 1" = 50'
V: 1" = 5'

0' 50' 100'
SCALE: 1" = 50

CONSTRUCTION NOTES

1. MAINTAIN MANAGEABLE VERTICAL CLEARANCE BETWEEN THE PROPOSED WATER MAIN AND THE EXISTING STORM SEWER, WATER MAIN, TELEPHONE DUCTS, AND GAS MAIN. CONSTRUCT ALL SANITARY SEWER CROSSINGS PER N.K.W.D. SPECIFICATIONS ITEM 1.14. MAINTAIN MINIMUM 18" BETWEEN THE PROPOSED WATER MAIN AND THE EXISTING SANITARY SEWER, ACTUAL ELEVATION UNKNOWN. CONTRACTOR TO EXCAVATE & VERIFY ACTUAL LOCATION, SIZE AND ELEVATION OF EXISTING UTILITY PRIOR TO BEGINNING WATER MAIN CONSTRUCTION. THE CONTRACTOR SHALL NOTIFY THE ENGINEER PRIOR TO CONSTRUCTION OF ANY POTENTIAL CONFLICT. NO ADDITIONAL PAYMENT WILL BE MADE FOR THIS WORK AND THE COST SHALL BE INCLUDED IN THE BID ITEM FOR WATER MAIN.
2. PROPOSED FIRE HYDRANT ASSEMBLY, VALVE AND BLOCKING AS PER N.K.W.D. STD. DRAWING NO. 109. COORDINATE LOCATION WITH N.K.W.D. INSPECTOR. ANCHOR VALVE TO TEE.
3. CONNECT TO EXISTING WATER MAIN (ACTUAL ELEVATION UNKNOWN). CONTRACTOR TO VERIFY DEPTH PRIOR TO CONSTRUCTION.
4. CHANNEL LINING, CLASS II (18") w/ NON-WOVEN GEOTEXTILE FILTER FABRIC
5. CONTRACTOR TO VERIFY LOCATION AND ELEVATION OF UTILITY PRIOR TO EXCAVATION ACTIVITY AND NOTIFY ENGINEER AND N.K.W.D. OF CONFLICTS. (** SEE NOTE)
6. DO NOT DISTURB
7. CONTRACTOR TO SUPPORT UTILITY POLE DURING PIPE INSTALLATION (** SEE NOTE)
8. REMOVE AND REPLACE SIGN (** SEE NOTE)
9. REMOVE AND REPLACE MAILBOX (** SEE NOTE)
10. INSTALL 5/8" METER SETTING PER NKWD STD. DWG. No. 107. INSTALL WATER SERVICE LINE (3/4" TYPE K COPPER) FROM THE PROPOSED WATER MAIN TO THE METER SETTING. MATERIAL WILL BE PROVIDED BY NKWD FOR THIS WORK. UNIT PRICE INCLUDES LABOR, EQUIPMENT, EXCAVATION, BEDDING, BACKFILL, ASPHALT, CONCRETE AND YARD RESTORATION TO INSTALL SERVICE LINE AS SHOWN ON PLANS OR DIRECTED BY NKWD IN ACCORDANCE WITH SPECS & STD. DWGS., COMPLETE.
11. REMOVE & REPLACE STORM STRUCTURE (CB,HW) AS NEEDED FOR WATER MAIN INSTALLATION (** SEE NOTE)
12. DRIVEWAY RESTORATION (SEE DETAILS)
13. TREE TO BE REMOVED

** **NOTE:**

WORK FOR THIS ITEM SHALL BE CONSIDERED INCIDENTAL TO THE OVERALL PROJECT AND NO ADDITIONAL PAYMENT SHALL BE MADE FOR THIS WORK. COST SHALL BE INCLUDED IN THE BID ITEM FOR WATER MAIN.

HATCH LEGEND

- 1-1/2" ASPHALT PAVEMENT MILL AND OVERLAY AREA
- TRENCH RESTORATION - ASPHALT PAVEMENT - SEE DETAIL SHEET
- TRENCH RESTORATION - CONCRETE PAVEMENT - SEE DETAIL SHEET
- TRENCH RESTORATION - 8" AGGREGATE PAVEMENT
- CONTROL DENSITY FILL - PAV'T TRENCH
- CONCRETE DRIVEWAY REPLACEMENT - SEE DETAIL SHEET
- CONCRETE WALK REPLACEMENT - SEE DETAIL SHEET
- ASPHALT DRIVEWAY REPLACEMENT - SEE DETAIL SHEET
- GRAVEL DRIVEWAY REPLACEMENT - SEE DETAIL SHEET
- CHANNEL LINING, CLASS II - SEE DETAIL SHEET
- * DENOTES PROPERTY WITH NEW SERVICE AND METER SETTING

verdantas
2161 CHAMBER CENTER DRIVE
FORT MITCHELL, KENTUCKY 41017
TEL. (859) 525-0544
WWW.VERDANTAS.COM

NO	REVISION	DATE
-	-	-

ISSUED FOR:	BID
ISSUE DATE:	APRIL 2025
SCALE:	AS SHOWN
DESIGNED BY:	JCOR
DRAWN BY:	JCOR
CHECKED BY:	JSHU

NORTHERN KENTUCKY WATER DISTRICT
SUBDISTRICT 'O'
-KENTON COUNTY -

SCENIC RIDGE DRIVE
STA. 18+00 to STA. 25+60

PROJECT NO. 231591
DISCIPLINE: CIVIL
SHEET NAME: C-03
SHEET 10 OF 28

\\VERDANTAS.COM\CT\PROJECTS\2023\231591\DWG\SHEETS\C_231591 PNP_08_STEEP CREEK.DWG - STEEP CREEK_1 - 4/26/2025 12:28:50 AM - JAMES CORNELL

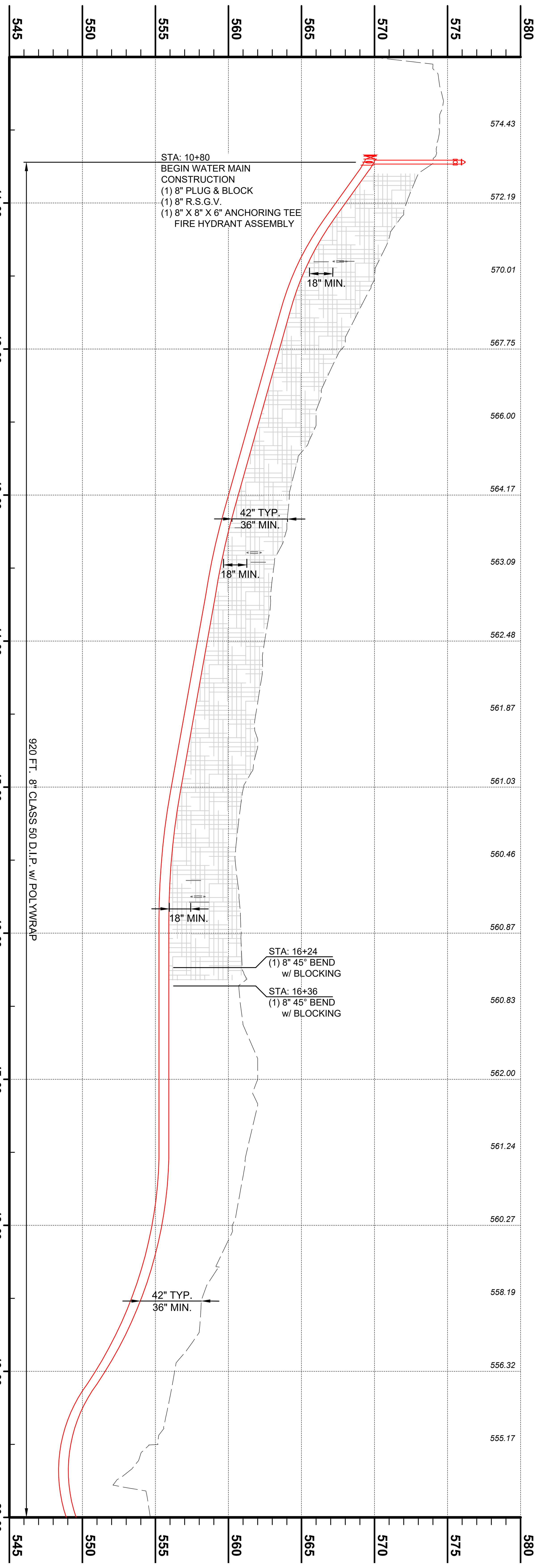

SCALE:
H: 1" = 50'
V: 1" = 5'

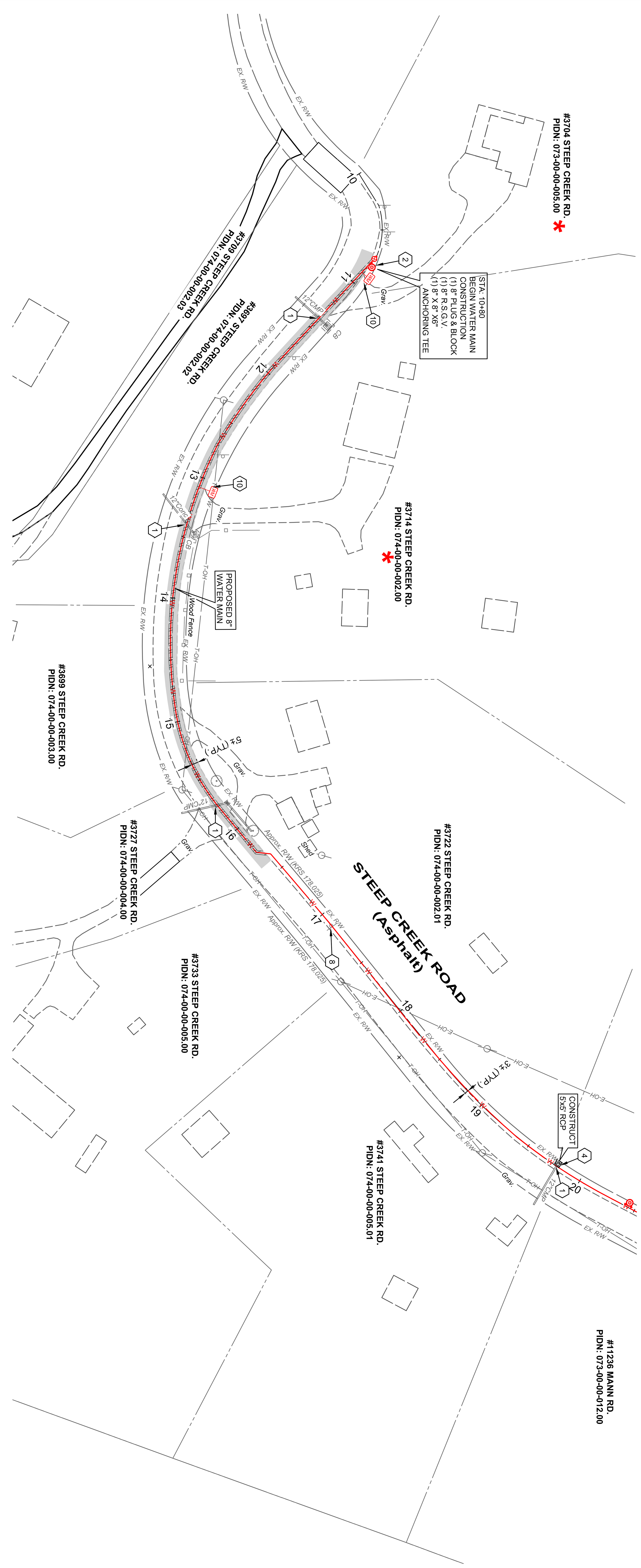

CONSTRUCTION NOTES

SCALE: 1" = 50'

1. MAINTAIN MANAGEABLE VERTICAL CLEARANCE BETWEEN THE PROPOSED WATER MAIN AND THE EXISTING STORM SEWER, WATER MAIN, TELEPHONE DUCTS, AND GAS MAIN. CONSTRUCT ALL SANITARY SEWER CROSSINGS PER N.K.W.D. SPECIFICATIONS ITEM 1.14. MAINTAIN MINIMUM 18" BETWEEN THE PROPOSED WATER MAIN AND THE EXISTING SANITARY SEWER, ACTUAL ELEVATION UNKNOWN. CONTRACTOR TO EXCAVATE & VERIFY ACTUAL LOCATION, SIZE AND ELEVATION OF EXISTING UTILITY PRIOR TO BEGINNING WATER MAIN CONSTRUCTION. THE CONTRACTOR SHALL NOTIFY THE ENGINEER PRIOR TO CONSTRUCTION OF ANY POTENTIAL CONFLICT. NO ADDITIONAL PAYMENT WILL BE MADE FOR THIS WORK AND THE COST SHALL BE INCLUDED IN THE BID ITEM FOR WATER MAIN.
2. PROPOSED FIRE HYDRANT ASSEMBLY, VALVE AND BLOCKING AS PER N.K.W.D. STD. DRAWING NO. 109. COORDINATE LOCATION WITH N.K.W.D. INSPECTOR. ANCHOR VALVE TO TEE.
3. CONNECT TO EXISTING WATER MAIN (ACTUAL ELEVATION UNKNOWN). CONTRACTOR TO VERIFY DEPTH PRIOR TO CONSTRUCTION.
4. CHANNEL LINING, CLASS II (18") w/ NON-WOVEN GEOTEXTILE FILTER FABRIC
5. CONTRACTOR TO VERIFY LOCATION AND ELEVATION OF UTILITY PRIOR TO EXCAVATION ACTIVITY AND NOTIFY ENGINEER AND N.K.W.D. OF CONFLICTS. (** SEE NOTE)
6. DO NOT DISTURB
7. CONTRACTOR TO SUPPORT UTILITY POLE DURING PIPE INSTALLATION (** SEE NOTE)
8. REMOVE AND REPLACE SIGN (** SEE NOTE)
9. REMOVE AND REPLACE MAILBOX (** SEE NOTE)
10. INSTALL 5/8" METER SETTING PER NKWD STD. DWG. No. 107. INSTALL WATER SERVICE LINE (3/4" TYPE K COPPER) FROM THE PROPOSED WATER MAIN TO THE METER SETTING. MATERIAL WILL BE PROVIDED BY NKWD FOR THIS WORK. UNIT PRICE INCLUDES LABOR, EQUIPMENT, EXCAVATION, BEDDING, BACKFILL, ASPHALT, CONCRETE AND YARD RESTORATION TO INSTALL SERVICE LINE AS SHOWN ON PLANS OR DIRECTED BY NKWD IN ACCORDANCE WITH SPECS & STD. DWGS., COMPLETE.
11. REMOVE & REPLACE STORM STRUCTURE (CB,HW) AS NEEDED FOR WATER MAIN INSTALLATION (** SEE NOTE)
12. DRIVEWAY RESTORATION (SEE DETAILS)
13. TREE TO BE REMOVED

**** NOTE:**
WORK FOR THIS ITEM SHALL BE CONSIDERED INCIDENTAL TO THE OVERALL PROJECT AND NO ADDITIONAL PAYMENT SHALL BE MADE FOR THIS WORK. COST SHALL BE INCLUDED IN THE BID ITEM FOR WATER MAIN.

HATCH LEGEND

- 1-1/2" ASPHALT PAVEMENT MILL AND OVERLAY AREA
- TRENCH RESTORATION - ASPHALT PAVEMENT - SEE DETAIL SHEET
- TRENCH RESTORATION - CONCRETE PAVEMENT - SEE DETAIL SHEET
- TRENCH RESTORATION - 8" AGGREGATE PAVEMENT
- CONTROL DENSITY FILL - PAV'T TRENCH
- CONCRETE DRIVEWAY REPLACEMENT - SEE DETAIL SHEET
- CONCRETE WALK REPLACEMENT - SEE DETAIL SHEET
- ASPHALT DRIVEWAY REPLACEMENT - SEE DETAIL SHEET
- GRAVEL DRIVEWAY REPLACEMENT - SEE DETAIL SHEET
- CHANNEL LINING, CLASS II - SEE DETAIL SHEET
- * DENOTES PROPERTY WITH NEW SERVICE AND METER SETTING

NORTHERN KENTUCKY WATER DISTRICT
SUBDISTRICT 'O'
-KENTON COUNTY -

STEEP CREEK ROAD
STA. 10+48 TO STA. 20+00

PROJECT NO.	231591
DISCIPLINE	CIVIL
SHEET NAME	C-04
SHEET	11 OF 28

ISSUED FOR:	BID
ISSUE DATE:	APRIL 2025
SCALE:	AS SHOWN
DESIGNED BY:	JCOR
DRAWN BY:	JCOR
CHECKED BY:	JSHU

NO	REVISION	DATE
.	.	.

verdantas
2161 CHAMBER CENTER DRIVE
FORT MITCHELL, KENTUCKY 41017
TEL. (859) 525-0544
WWW.VERDANTAS.COM

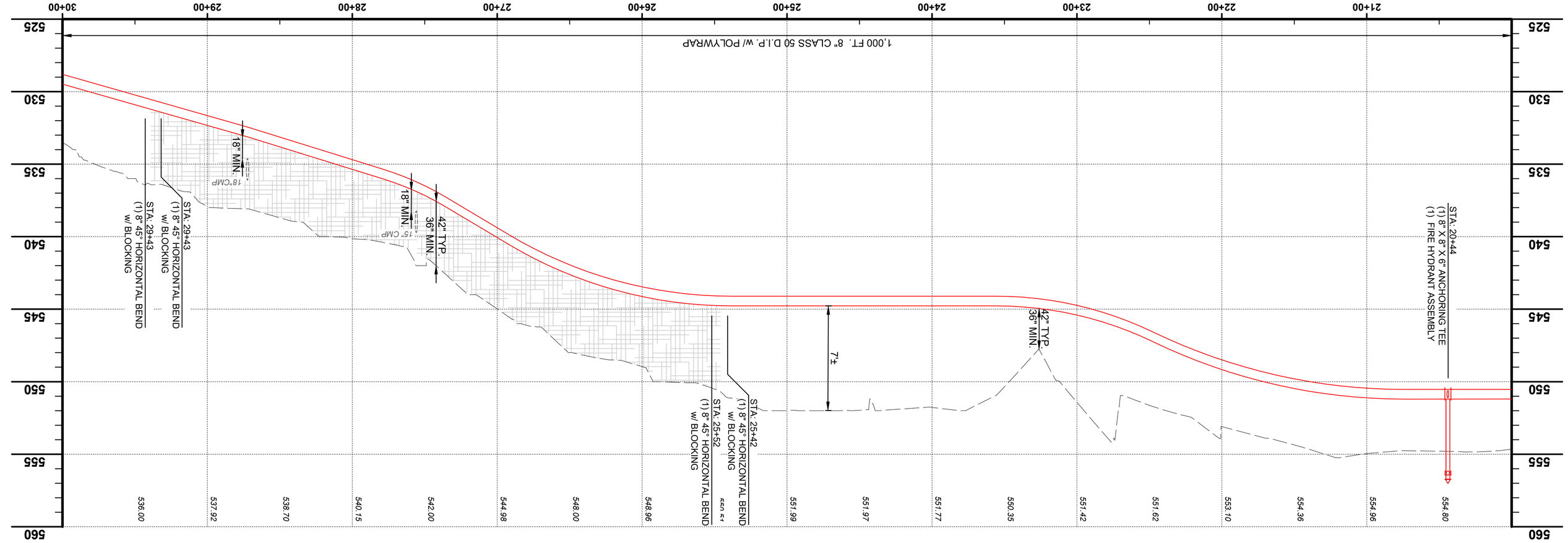

SCALE:
H: 1" = 50'
V: 1" = 5'

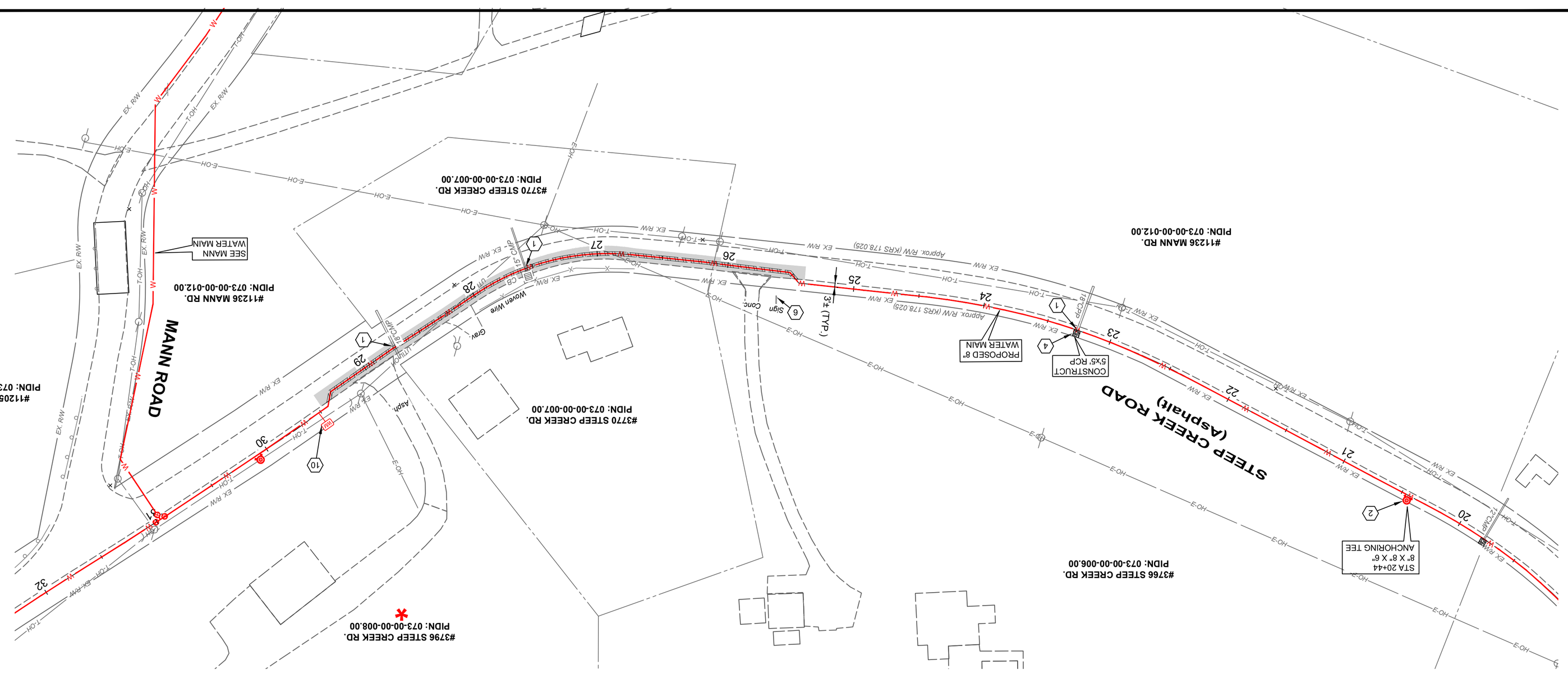

CONSTRUCTION NOTES

1. MAINTAIN MANAGEABLE VERTICAL CLEARANCE BETWEEN THE PROPOSED WATER MAIN AND THE EXISTING STORM SEWER, WATER MAIN, TELEPHONE SEWER CROSSINGS PER K.R.W.D. SPECIFICATIONS DUCTS, AND GAS MAIN. CONSTRUCT ALL SANITARY PROPOSED WATER MAIN AND THE EXISTING SANITARY ITEM 1.14, MAINTAIN MINIMUM 18" BETWEEN THE SEWER. ACTUAL ELEVATION UNKNOWN. CONTRACTOR TO EXCAVATE & VERIFY ACTUAL LOCATION, SIZE AND ELEVATION OF EXISTING UTILITY PRIOR TO BEGINNING SHALL NOTIFY THE ENGINEER PRIOR TO WATER MAIN CONSTRUCTION. THE CONTRACTOR CONSTRUCTION OF ANY POTENTIAL CONFLICT. NO ADDITIONAL PAYMENT WILL BE MADE FOR THIS WORK AND THE COST SHALL BE INCLUDED IN THE BID ITEM FOR WATER MAIN.
2. PROPOSED FIRE HYDRANT ASSEMBLY, VALVE AND BLOCKING AS PER K.R.W.D. STD. DRAWING NO. 109. COORDINATE LOCATION WITH K.R.W.D. INSPECTOR. ANCHOR VALVE TO TEE.
3. CONNECT TO EXISTING WATER MAIN (ACTUAL ELEVATION UNKNOWN). CONTRACTOR TO VERIFY DEPTH PRIOR TO CONSTRUCTION.
4. CHANNEL LINING, CLASS II (18") w/ NON-WOVEN GEOTEXTILE FILTER FABRIC
5. CONTRACTOR TO VERIFY LOCATION AND ELEVATION OF UTILITY PRIOR TO EXCAVATION ACTIVITY AND NOTIFY ENGINEER AND K.R.W.D. OF CONFLICTS. (** SEE NOTE)
6. DO NOT DISTURB
7. CONTRACTOR TO SUPPORT UTILITY POLE DURING PIPE INSTALLATION (** SEE NOTE)
8. REMOVE AND REPLACE SIGN (** SEE NOTE)
9. REMOVE AND REPLACE MAILBOX (** SEE NOTE)
10. INSTALL 5/8" METER SETTING PER NKWD STD. DWG No. 107. INSTALL WATER SERVICE LINE (3/4" TYPE K COPPER) FROM THE PROPOSED WATER MAIN TO THE METER SETTING. MATERIAL WILL BE PROVIDED BY NKWD FOR THIS WORK. UNIT PRICE INCLUDES LABOR, EQUIPMENT, EXCAVATION, BEDDING, BACKFILL, ASPHALT, CONCRETE AND YARD RESTORATION TO DIRECTED BY NKWD IN ACCORDANCE WITH SPECS & STD. DWGS., COMPLETE.
11. REMOVE & REPLACE STORM STRUCTURE (CB,HW) AS NEEDED FOR WATER MAIN INSTALLATION (** SEE NOTE)
12. DRIEWAY RESTORATION (SEE DETAILS)
13. TREE TO BE REMOVED

**NOTE:
WORK FOR THIS ITEM SHALL BE CONSIDERED INCIDENTAL TO THE OVERALL PROJECT AND NO ADDITIONAL PAYMENT SHALL BE MADE FOR THIS WORK. COST SHALL BE INCLUDED IN THE BID ITEM FOR WATER MAIN.

HATCH LEGEND

- 1-1/2" ASPHALT PAVEMENT MILL AND OVERLAY AREA
- TRENCH RESTORATION - ASPHALT PAVEMENT - SEE DETAIL SHEET
- TRENCH RESTORATION - CONCRETE PAVEMENT - SEE DETAIL SHEET
- TRENCH RESTORATION - 8" AGGREGATE PAVEMENT
- CONTROL DENSITY FILL - PAVT TRENCH
- CONCRETE DRIVEWAY REPLACEMENT - SEE DETAIL SHEET
- CONCRETE WALK REPLACEMENT - SEE DETAIL SHEET
- ASPHALT DRIEWAY REPLACEMENT - SEE DETAIL SHEET
- GRAVEL DRIEWAY REPLACEMENT - SEE DETAIL SHEET
- CHANNEL LINING, CLASS II - SEE DETAIL SHEET
- * DENOTES PROPERTY WITH NEW SERVICE AND METER SETTING

SCALE: 1" = 50'
0' 50' 100'

ISSUED FOR:	BID
ISSUE DATE:	APRIL 2025
SCALE:	AS SHOWN
DESIGNED BY:	JCOR
DRAWN BY:	JCOR
CHECKED BY:	JSHU

NO	REVISION	DATE
-	-	-

verdantas
2161 CHAMBER CENTER DRIVE
FORT MITCHELL, KENTUCKY 41017
TEL: (859) 525-0544
WWW.VERDANTAS.COM

NORTHERN KENTUCKY WATER DISTRICT
SUBDISTRICT 'O'
-KENTON COUNTY -

STEEP CREEK ROAD
STA. 20+00 TO STA. 30+00

PROJECT NO.	DISCIPLINE	SHEET NAME	SHEET	OF
231591	CIVIL	C-05	12	28

\\VERDANTAS.COM\CINFW02\CIT\S0\32\231591\DWG\SHEETS\C_20 1591 PNP_SE_STEEP CREEK.DWG - STEEP CREEK.P - 4/28/2025 12:26:50 AM - JAMES CORNELL

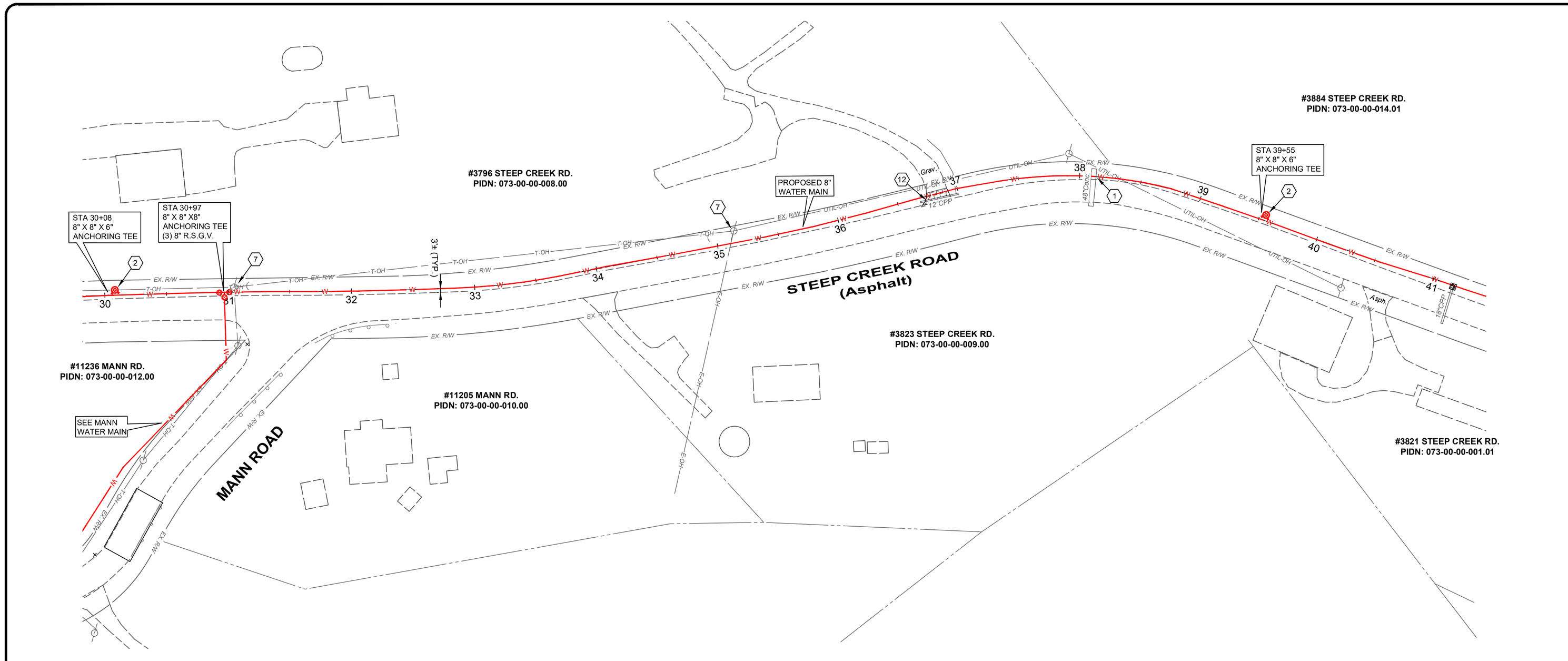

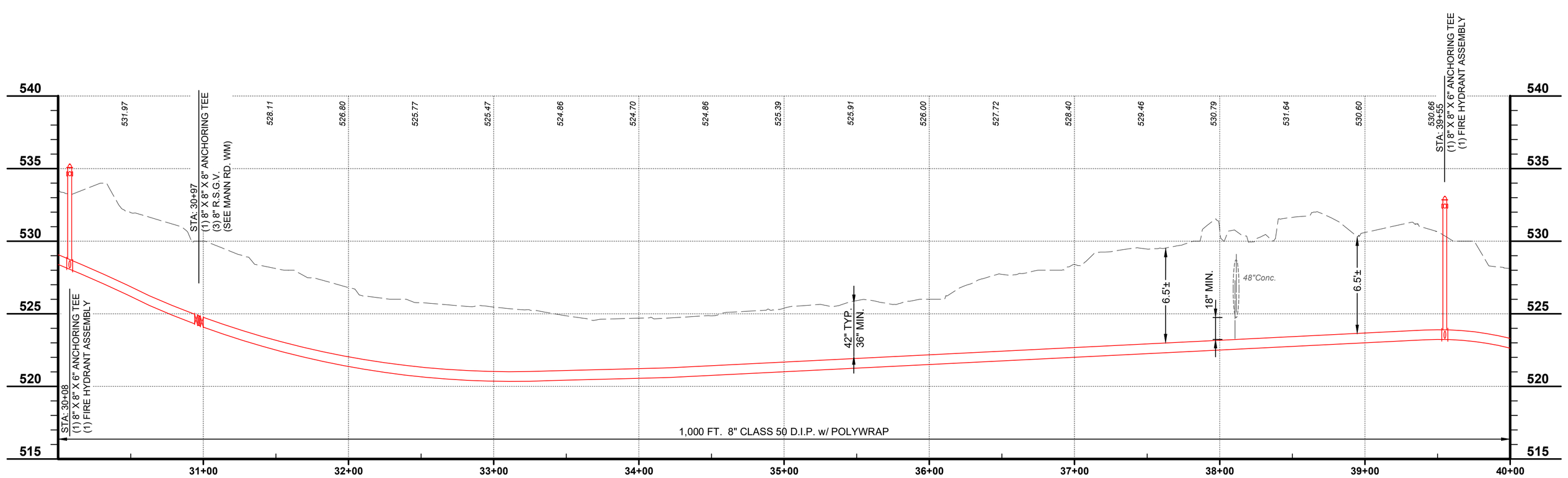

SCALE:
H: 1" = 50'
V: 1" = 5'

0' 50' 100'
SCALE: 1" = 50'

CONSTRUCTION NOTES

1. MAINTAIN MANAGEABLE VERTICAL CLEARANCE BETWEEN THE PROPOSED WATER MAIN AND THE EXISTING STORM SEWER, WATER MAIN, TELEPHONE DUCTS, AND GAS MAIN. CONSTRUCT ALL SANITARY SEWER CROSSINGS PER N.K.W.D. SPECIFICATIONS ITEM 1.14. MAINTAIN MINIMUM 18" BETWEEN THE PROPOSED WATER MAIN AND THE EXISTING SANITARY SEWER, ACTUAL ELEVATION UNKNOWN. CONTRACTOR TO EXCAVATE & VERIFY ACTUAL LOCATION, SIZE AND ELEVATION OF EXISTING UTILITY PRIOR TO BEGINNING WATER MAIN CONSTRUCTION. THE CONTRACTOR SHALL NOTIFY THE ENGINEER PRIOR TO CONSTRUCTION OF ANY POTENTIAL CONFLICT. NO ADDITIONAL PAYMENT WILL BE MADE FOR THIS WORK AND THE COST SHALL BE INCLUDED IN THE BID ITEM FOR WATER MAIN.
2. PROPOSED FIRE HYDRANT ASSEMBLY, VALVE AND BLOCKING AS PER N.K.W.D. STD. DRAWING NO. 109. COORDINATE LOCATION WITH N.K.W.D. INSPECTOR. ANCHOR VALVE TO TEE.
3. CONNECT TO EXISTING WATER MAIN (ACTUAL ELEVATION UNKNOWN). CONTRACTOR TO VERIFY DEPTH PRIOR TO CONSTRUCTION.
4. CHANNEL LINING, CLASS II (18") w/ NON-WOVEN GEOTEXTILE FILTER FABRIC
5. CONTRACTOR TO VERIFY LOCATION AND ELEVATION OF UTILITY PRIOR TO EXCAVATION ACTIVITY AND NOTIFY ENGINEER AND N.K.W.D. OF CONFLICTS. (** SEE NOTE)
6. DO NOT DISTURB
7. CONTRACTOR TO SUPPORT UTILITY POLE DURING PIPE INSTALLATION (** SEE NOTE)
8. REMOVE AND REPLACE SIGN (** SEE NOTE)
9. REMOVE AND REPLACE MAILBOX (** SEE NOTE)
10. INSTALL 5/8" METER SETTING PER NKWD STD. DWG. No. 107. INSTALL WATER SERVICE LINE (3/4" TYPE K COPPER) FROM THE PROPOSED WATER MAIN TO THE METER SETTING. MATERIAL WILL BE PROVIDED BY NKWD FOR THIS WORK. UNIT PRICE INCLUDES LABOR, EQUIPMENT, EXCAVATION, BEDDING, BACKFILL, ASPHALT, CONCRETE AND YARD RESTORATION TO INSTALL SERVICE LINE AS SHOWN ON PLANS OR DIRECTED BY NKWD IN ACCORDANCE WITH SPECS & STD. DWGS., COMPLETE.
11. REMOVE & REPLACE STORM STRUCTURE (CB,HW) AS NEEDED FOR WATER MAIN INSTALLATION (** SEE NOTE)
12. DRIVEWAY RESTORATION (SEE DETAILS)
13. TREE TO BE REMOVED

** **NOTE:**

WORK FOR THIS ITEM SHALL BE CONSIDERED INCIDENTAL TO THE OVERALL PROJECT AND NO ADDITIONAL PAYMENT SHALL BE MADE FOR THIS WORK. COST SHALL BE INCLUDED IN THE BID ITEM FOR WATER MAIN.

HATCH LEGEND

- 1-1/2" ASPHALT PAVEMENT MILL AND OVERLAY AREA
- TRENCH RESTORATION - ASPHALT PAVEMENT - SEE DETAIL SHEET
- TRENCH RESTORATION - CONCRETE PAVEMENT - SEE DETAIL SHEET
- TRENCH RESTORATION - 8" AGGREGATE PAVEMENT
- CONTROL DENSITY FILL - PAV'T TRENCH
- CONCRETE DRIVEWAY REPLACEMENT - SEE DETAIL SHEET
- CONCRETE WALK REPLACEMENT - SEE DETAIL SHEET
- ASPHALT DRIVEWAY REPLACEMENT - SEE DETAIL SHEET
- GRAVEL DRIVEWAY REPLACEMENT - SEE DETAIL SHEET
- CHANNEL LINING, CLASS II - SEE DETAIL SHEET
- * DENOTES PROPERTY WITH NEW SERVICE AND METER SETTING

verdantas
2161 CHAMBER CENTER DRIVE
FORT MITCHELL, KENTUCKY 41017
TEL. (859) 525-0544
WWW.VERDANTAS.COM

NO	REVISION	DATE
-	-	-

ISSUED FOR:	BID
ISSUE DATE:	APRIL 2025
SCALE:	AS SHOWN
DESIGNED BY:	JCOR
DRAWN BY:	JCOR
CHECKED BY:	JSHU

NORTHERN KENTUCKY WATER DISTRICT
SUBDISTRICT 'O'
-KENTON COUNTY -

STEEP CREEK ROAD
STA. 30+00 TO STa. 40+00

PROJECT NO.	
231591	
DISCIPLINE	
CIVIL	
SHEET NAME	
C-06	
SHEET	OF
13	28

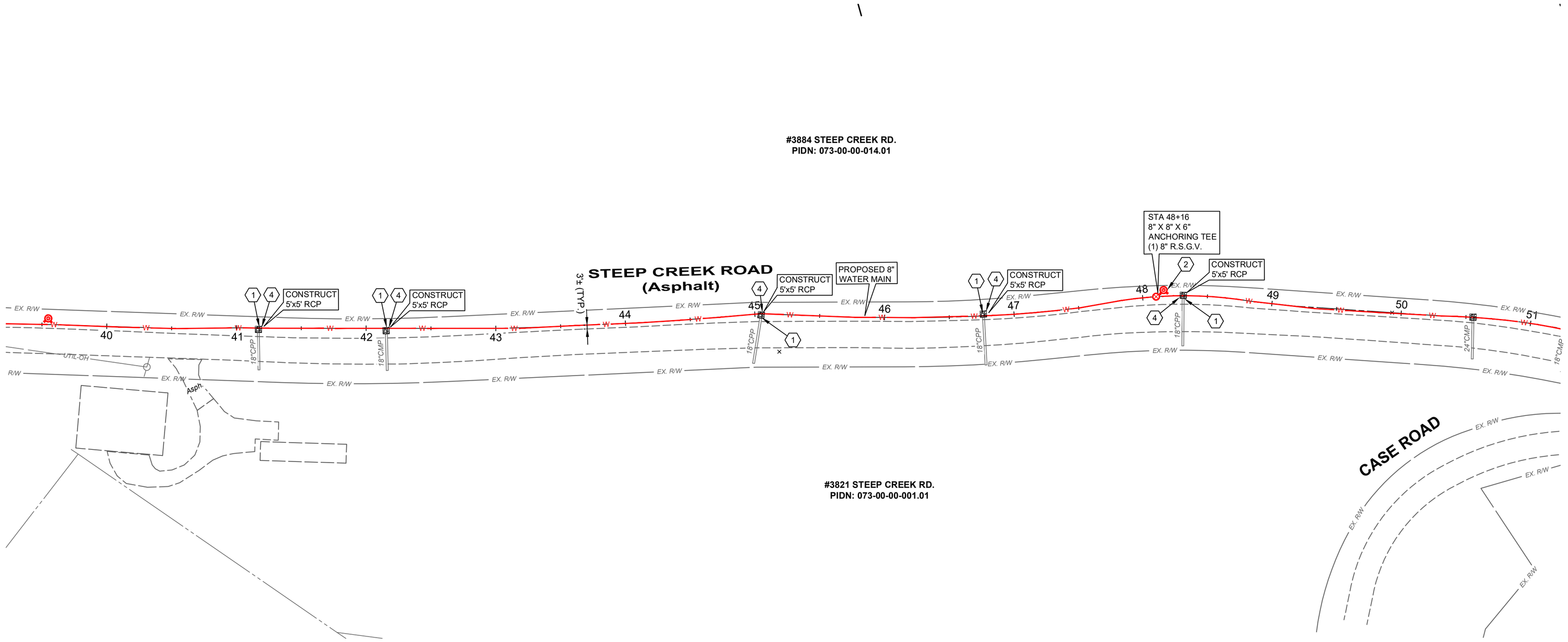

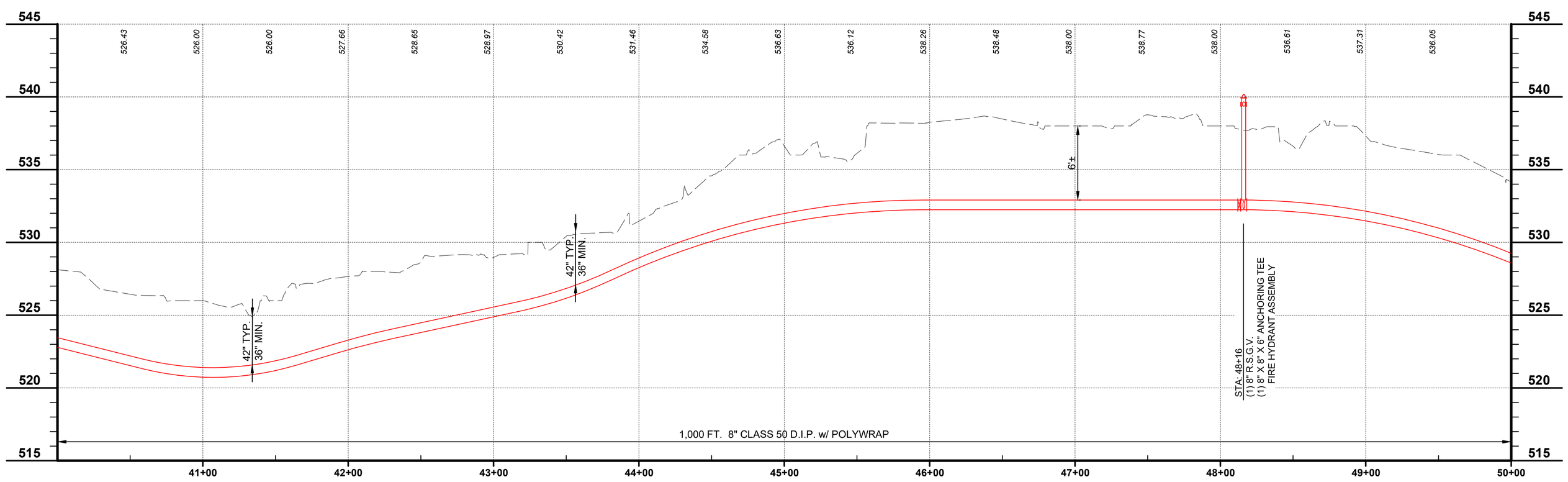

SCALE:
H: 1" = 50'
V: 1" = 5'

0' 50' 100'
SCALE: 1" = 50'

CONSTRUCTION NOTES

1. MAINTAIN MANAGEABLE VERTICAL CLEARANCE BETWEEN THE PROPOSED WATER MAIN AND THE EXISTING STORM SEWER, WATER MAIN, TELEPHONE DUCTS, AND GAS MAIN. CONSTRUCT ALL SANITARY SEWER CROSSINGS PER N.K.W.D. SPECIFICATIONS ITEM 1.14. MAINTAIN MINIMUM 18" BETWEEN THE PROPOSED WATER MAIN AND THE EXISTING SANITARY SEWER, ACTUAL ELEVATION UNKNOWN. CONTRACTOR TO EXCAVATE & VERIFY ACTUAL LOCATION, SIZE AND ELEVATION OF EXISTING UTILITY PRIOR TO BEGINNING WATER MAIN CONSTRUCTION. THE CONTRACTOR SHALL NOTIFY THE ENGINEER PRIOR TO CONSTRUCTION OF ANY POTENTIAL CONFLICT. NO ADDITIONAL PAYMENT WILL BE MADE FOR THIS WORK AND THE COST SHALL BE INCLUDED IN THE BID ITEM FOR WATER MAIN.
2. PROPOSED FIRE HYDRANT ASSEMBLY, VALVE AND BLOCKING AS PER N.K.W.D. STD. DRAWING NO. 109. COORDINATE LOCATION WITH N.K.W.D. INSPECTOR. ANCHOR VALVE TO TEE.
3. CONNECT TO EXISTING WATER MAIN (ACTUAL ELEVATION UNKNOWN). CONTRACTOR TO VERIFY DEPTH PRIOR TO CONSTRUCTION.
4. CHANNEL LINING, CLASS II (18") w/ NON-WOVEN GEOTEXTILE FILTER FABRIC
5. CONTRACTOR TO VERIFY LOCATION AND ELEVATION OF UTILITY PRIOR TO EXCAVATION ACTIVITY AND NOTIFY ENGINEER AND N.K.W.D. OF CONFLICTS. (** SEE NOTE)
6. DO NOT DISTURB
7. CONTRACTOR TO SUPPORT UTILITY POLE DURING PIPE INSTALLATION (** SEE NOTE)
8. REMOVE AND REPLACE SIGN (** SEE NOTE)
9. REMOVE AND REPLACE MAILBOX (** SEE NOTE)
10. INSTALL 5/8" METER SETTING PER NKWD STD. DWG. No. 107. INSTALL WATER SERVICE LINE (3/4" TYPE K COPPER) FROM THE PROPOSED WATER MAIN TO THE METER SETTING. MATERIAL WILL BE PROVIDED BY NKWD FOR THIS WORK. UNIT PRICE INCLUDES LABOR, EQUIPMENT, EXCAVATION, BEDDING, BACKFILL, ASPHALT, CONCRETE AND YARD RESTORATION TO INSTALL SERVICE LINE AS SHOWN ON PLANS OR DIRECTED BY NKWD IN ACCORDANCE WITH SPECS & STD. DWGS., COMPLETE.
11. REMOVE & REPLACE STORM STRUCTURE (CB,HW) AS NEEDED FOR WATER MAIN INSTALLATION (** SEE NOTE)
12. DRIVEWAY RESTORATION (SEE DETAILS)
13. TREE TO BE REMOVED

** **NOTE:**

WORK FOR THIS ITEM SHALL BE CONSIDERED INCIDENTAL TO THE OVERALL PROJECT AND NO ADDITIONAL PAYMENT SHALL BE MADE FOR THIS WORK. COST SHALL BE INCLUDED IN THE BID ITEM FOR WATER MAIN.

HATCH LEGEND

- 1-1/2" ASPHALT PAVEMENT MILL AND OVERLAY AREA
- TRENCH RESTORATION - ASPHALT PAVEMENT - SEE DETAIL SHEET
- TRENCH RESTORATION - CONCRETE PAVEMENT - SEE DETAIL SHEET
- TRENCH RESTORATION - 8" AGGREGATE PAVEMENT
- CONTROL DENSITY FILL - PAV'T TRENCH
- CONCRETE DRIVEWAY REPLACEMENT - SEE DETAIL SHEET
- CONCRETE WALK REPLACEMENT - SEE DETAIL SHEET
- ASPHALT DRIVEWAY REPLACEMENT - SEE DETAIL SHEET
- GRAVEL DRIVEWAY REPLACEMENT - SEE DETAIL SHEET
- CHANNEL LINING, CLASS II - SEE DETAIL SHEET
- * DENOTES PROPERTY WITH NEW SERVICE AND METER SETTING

verdantas
2161 CHAMBER CENTER DRIVE
FORT MITCHELL, KENTUCKY 41017
TEL. (859) 525-0544
WWW.VERDANTAS.COM

NO	REVISION	DATE
-	-	-

ISSUED FOR:	BID
ISSUE DATE:	APRIL 2025
SCALE:	AS SHOWN
DESIGNED BY:	JCOR
DRAWN BY:	JCOR
CHECKED BY:	JSHU

NORTHERN KENTUCKY WATER DISTRICT
SUBDISTRICT 'O'
-KENTON COUNTY -

STEEP CREEK ROAD
sta. 40+00 to sta. 50+00

PROJECT NO. 231591
DISCIPLINE CIVIL
SHEET NAME C-07
SHEET 14 OF 28

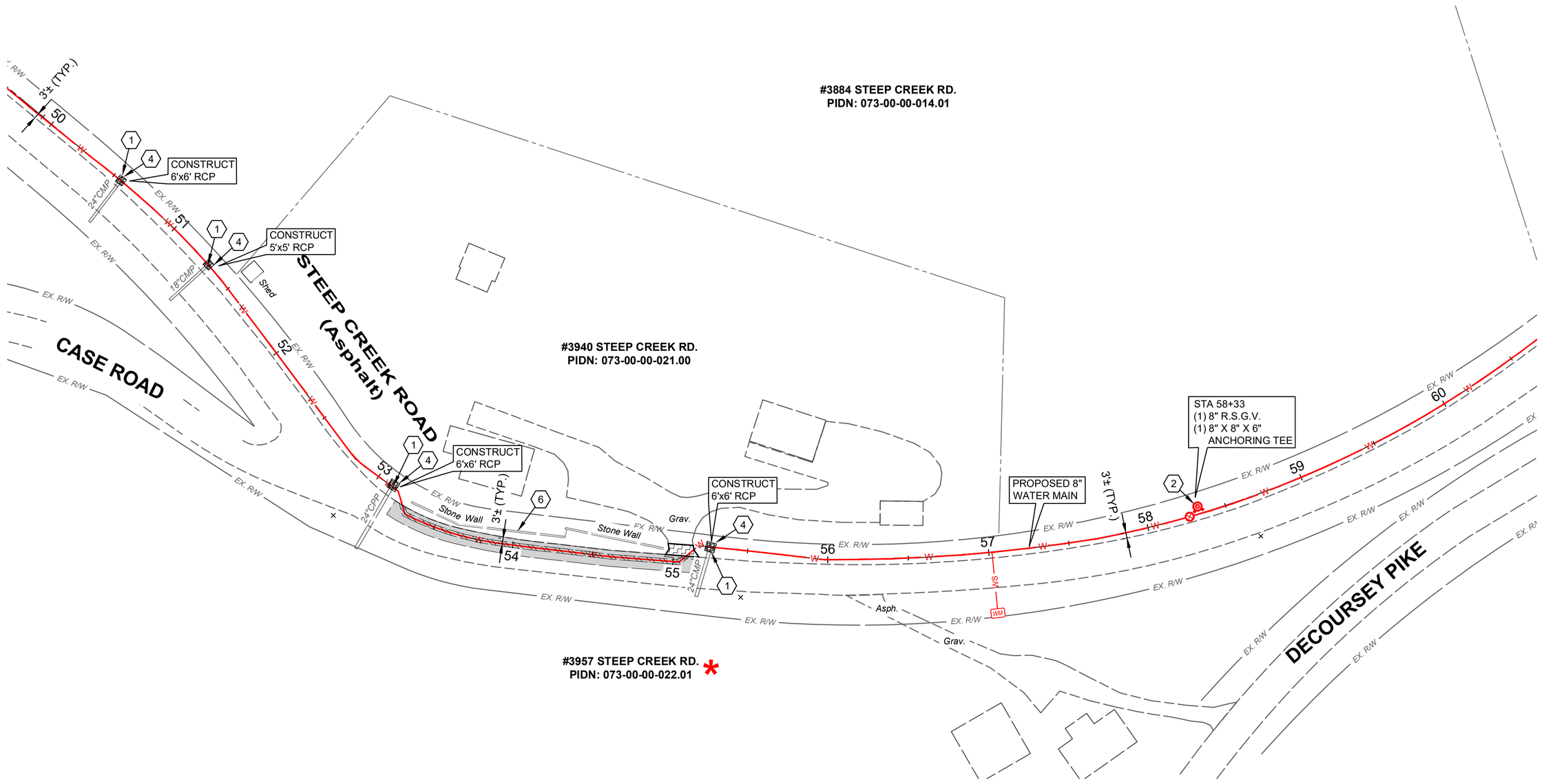

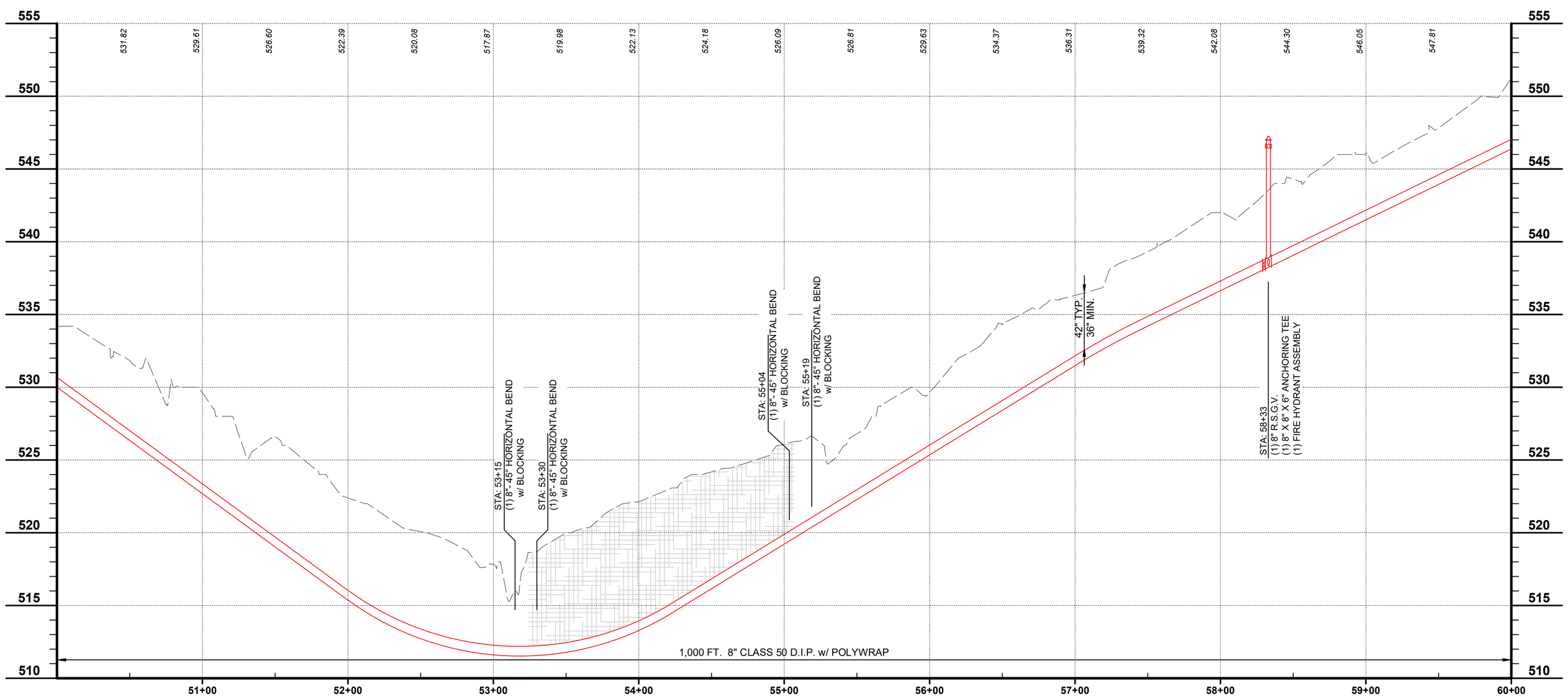

SCALE:
H: 1" = 50'
V: 1" = 5'

0' 50' 100'
SCALE: 1" = 50'

CONSTRUCTION NOTES

1. MAINTAIN MANAGEABLE VERTICAL CLEARANCE BETWEEN THE PROPOSED WATER MAIN AND THE EXISTING STORM SEWER, WATER MAIN, TELEPHONE DUCTS, AND GAS MAIN. CONSTRUCT ALL SANITARY SEWER CROSSINGS PER N.K.W.D. SPECIFICATIONS ITEM 1.14. MAINTAIN MINIMUM 18" BETWEEN THE PROPOSED WATER MAIN AND THE EXISTING SANITARY SEWER, ACTUAL ELEVATION UNKNOWN. CONTRACTOR TO EXCAVATE & VERIFY ACTUAL LOCATION, SIZE AND ELEVATION OF EXISTING UTILITY PRIOR TO BEGINNING WATER MAIN CONSTRUCTION. THE CONTRACTOR SHALL NOTIFY THE ENGINEER PRIOR TO CONSTRUCTION OF ANY POTENTIAL CONFLICT. NO ADDITIONAL PAYMENT WILL BE MADE FOR THIS WORK AND THE COST SHALL BE INCLUDED IN THE BID ITEM FOR WATER MAIN.
2. PROPOSED FIRE HYDRANT ASSEMBLY, VALVE AND BLOCKING AS PER N.K.W.D. STD. DRAWING NO. 109. COORDINATE LOCATION WITH N.K.W.D. INSPECTOR. ANCHOR VALVE TO TEE.
3. CONNECT TO EXISTING WATER MAIN (ACTUAL ELEVATION UNKNOWN). CONTRACTOR TO VERIFY DEPTH PRIOR TO CONSTRUCTION.
4. CHANNEL LINING, CLASS II (18") w/ NON-WOVEN GEOTEXTILE FILTER FABRIC
5. CONTRACTOR TO VERIFY LOCATION AND ELEVATION OF UTILITY PRIOR TO EXCAVATION ACTIVITY AND NOTIFY ENGINEER AND N.K.W.D. OF CONFLICTS. (** SEE NOTE)
6. DO NOT DISTURB
7. CONTRACTOR TO SUPPORT UTILITY POLE DURING PIPE INSTALLATION (** SEE NOTE)
8. REMOVE AND REPLACE SIGN (** SEE NOTE)
9. REMOVE AND REPLACE MAILBOX (** SEE NOTE)
10. INSTALL 5/8" METER SETTING PER NKWD STD. DWG. No. 107. INSTALL WATER SERVICE LINE (3/4" TYPE K COPPER) FROM THE PROPOSED WATER MAIN TO THE METER SETTING. MATERIAL WILL BE PROVIDED BY NKWD FOR THIS WORK. UNIT PRICE INCLUDES LABOR, EQUIPMENT, EXCAVATION, BEDDING, BACKFILL, ASPHALT, CONCRETE AND YARD RESTORATION TO INSTALL SERVICE LINE AS SHOWN ON PLANS OR DIRECTED BY NKWD IN ACCORDANCE WITH SPECS & STD. DWGS., COMPLETE.
11. REMOVE & REPLACE STORM STRUCTURE (CB,HW) AS NEEDED FOR WATER MAIN INSTALLATION (** SEE NOTE)
12. DRIVEWAY RESTORATION (SEE DETAILS)
13. TREE TO BE REMOVED

** **NOTE:**

WORK FOR THIS ITEM SHALL BE CONSIDERED INCIDENTAL TO THE OVERALL PROJECT AND NO ADDITIONAL PAYMENT SHALL BE MADE FOR THIS WORK. COST SHALL BE INCLUDED IN THE BID ITEM FOR WATER MAIN.

HATCH LEGEND

- 1-1/2" ASPHALT PAVEMENT MILL AND OVERLAY AREA
- TRENCH RESTORATION - ASPHALT PAVEMENT - SEE DETAIL SHEET
- TRENCH RESTORATION - CONCRETE PAVEMENT - SEE DETAIL SHEET
- TRENCH RESTORATION - 8" AGGREGATE PAVEMENT
- CONTROL DENSITY FILL - PAV'T TRENCH
- CONCRETE DRIVEWAY REPLACEMENT - SEE DETAIL SHEET
- CONCRETE WALK REPLACEMENT - SEE DETAIL SHEET
- ASPHALT DRIVEWAY REPLACEMENT - SEE DETAIL SHEET
- GRAVEL DRIVEWAY REPLACEMENT - SEE DETAIL SHEET
- CHANNEL LINING, CLASS II - SEE DETAIL SHEET
- * DENOTES PROPERTY WITH NEW SERVICE AND METER SETTING

verdantas
2161 CHAMBER CENTER DRIVE
FORT MITCHELL, KENTUCKY 41017
TEL. (859) 525-0544
WWW.VERDANTAS.COM

NO	REVISION	DATE
-	-	-

ISSUED FOR:	BID
ISSUE DATE:	APRIL 2025
SCALE:	AS SHOWN
DESIGNED BY:	JCOR
DRAWN BY:	JCOR
CHECKED BY:	JSHU

NORTHERN KENTUCKY WATER DISTRICT
SUBDISTRICT 'O'
-KENTON COUNTY -

STEEP CREEK ROAD
STA. 50+00 TO STA. 60+00

PROJECT NO. 231591
DISCIPLINE: CIVIL
SHEET NAME: C-08
SHEET 15 OF 28

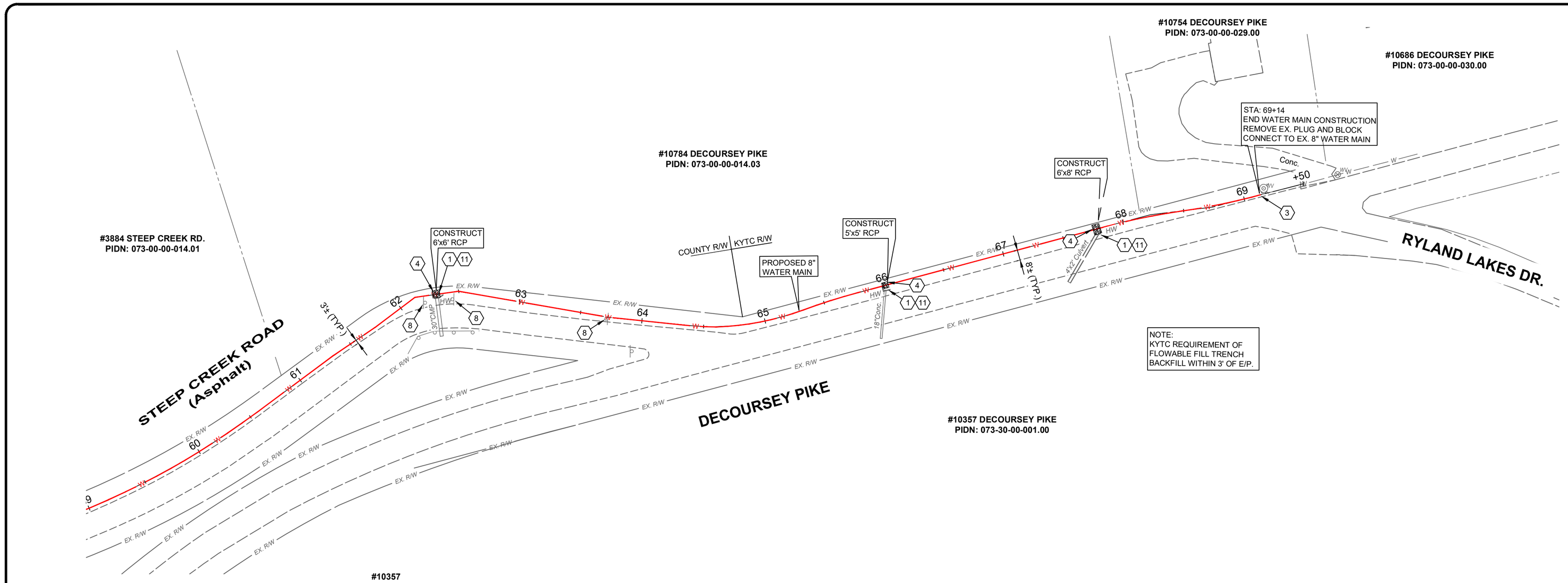

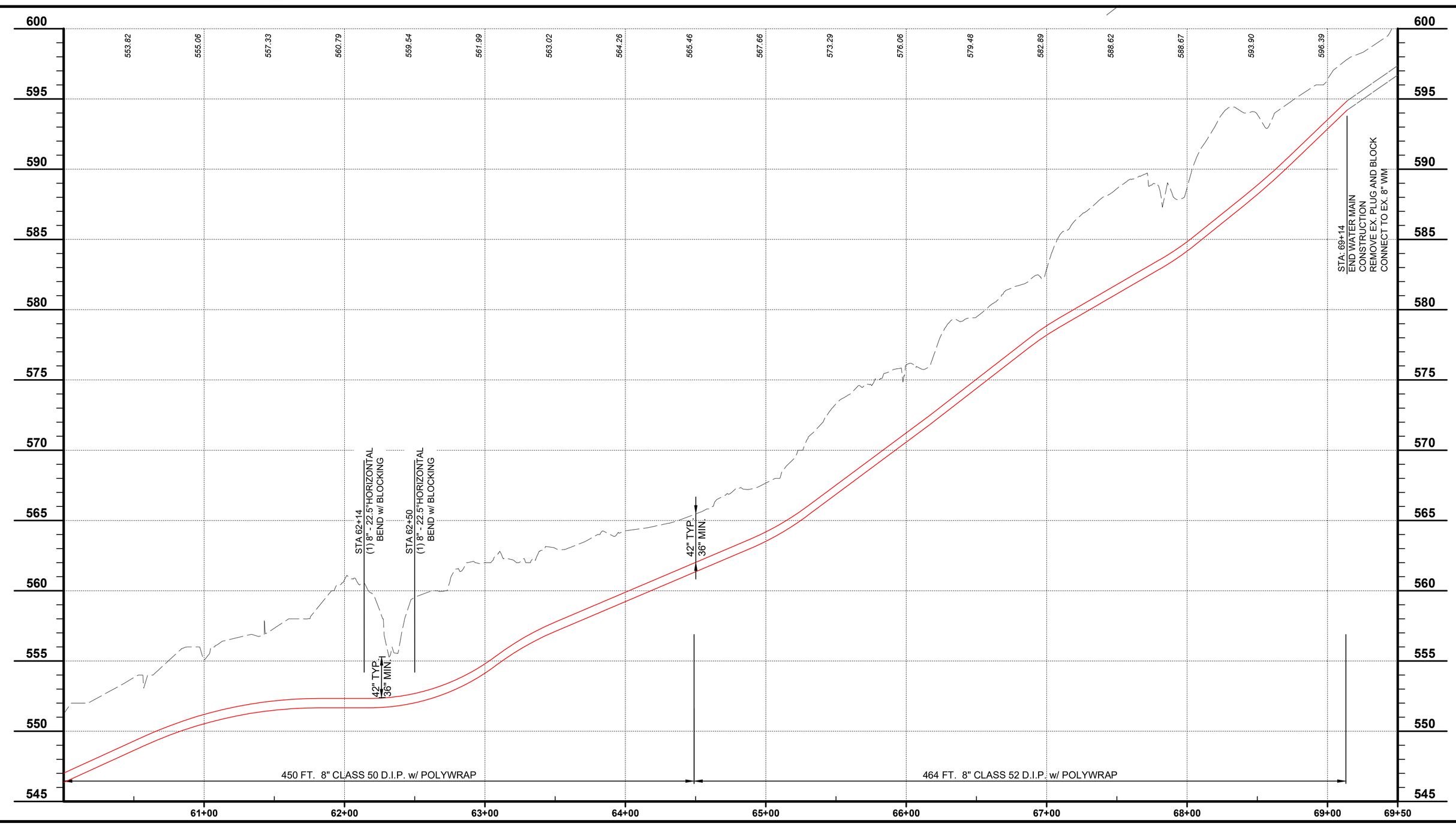

SCALE:
H: 1" = 50'
V: 1" = 5'

CONSTRUCTION NOTES

1. MAINTAIN MANAGEABLE VERTICAL CLEARANCE BETWEEN THE PROPOSED WATER MAIN AND THE EXISTING STORM SEWER, WATER MAIN, TELEPHONE DUCTS, AND GAS MAIN. CONSTRUCT ALL SANITARY SEWER CROSSINGS PER N.K.W.D. SPECIFICATIONS ITEM 1.14. MAINTAIN MINIMUM 18" BETWEEN THE PROPOSED WATER MAIN AND THE EXISTING SANITARY SEWER, ACTUAL ELEVATION UNKNOWN. CONTRACTOR TO EXCAVATE & VERIFY ACTUAL LOCATION, SIZE AND ELEVATION OF EXISTING UTILITY PRIOR TO BEGINNING WATER MAIN CONSTRUCTION. THE CONTRACTOR SHALL NOTIFY THE ENGINEER PRIOR TO CONSTRUCTION OF ANY POTENTIAL CONFLICT. NO ADDITIONAL PAYMENT WILL BE MADE FOR THIS WORK AND THE COST SHALL BE INCLUDED IN THE BID ITEM FOR WATER MAIN.
2. PROPOSED FIRE HYDRANT ASSEMBLY, VALVE AND BLOCKING AS PER N.K.W.D. STD. DRAWING NO. 109. COORDINATE LOCATION WITH N.K.W.D. INSPECTOR. ANCHOR VALVE TO TEE.
3. CONNECT TO EXISTING WATER MAIN (ACTUAL ELEVATION UNKNOWN). CONTRACTOR TO VERIFY DEPTH PRIOR TO CONSTRUCTION.
4. CHANNEL LINING, CLASS II (18") w/ NON-WOVEN GEOTEXTILE FILTER FABRIC
5. CONTRACTOR TO VERIFY LOCATION AND ELEVATION OF UTILITY PRIOR TO EXCAVATION ACTIVITY AND NOTIFY ENGINEER AND N.K.W.D. OF CONFLICTS. (** SEE NOTE)
6. DO NOT DISTURB
7. CONTRACTOR TO SUPPORT UTILITY POLE DURING PIPE INSTALLATION (** SEE NOTE)
8. REMOVE AND REPLACE SIGN (** SEE NOTE)
9. REMOVE AND REPLACE MAILBOX (** SEE NOTE)
10. INSTALL 5/8" METER SETTING PER NKWD STD. DWG. No. 107. INSTALL WATER SERVICE LINE (3/4" TYPE K COPPER) FROM THE PROPOSED WATER MAIN TO THE METER SETTING. MATERIAL WILL BE PROVIDED BY NKWD FOR THIS WORK. UNIT PRICE INCLUDES LABOR, EQUIPMENT, EXCAVATION, BEDDING, BACKFILL, ASPHALT, CONCRETE AND YARD RESTORATION TO INSTALL SERVICE LINE AS SHOWN ON PLANS OR DIRECTED BY NKWD IN ACCORDANCE WITH SPECS & STD. DWGS., COMPLETE.
11. REMOVE & REPLACE STORM STRUCTURE (CB,HW) AS NEEDED FOR WATER MAIN INSTALLATION (** SEE NOTE)
12. DRIVEWAY RESTORATION (SEE DETAILS)
13. TREE TO BE REMOVED

** **NOTE:**

WORK FOR THIS ITEM SHALL BE CONSIDERED INCIDENTAL TO THE OVERALL PROJECT AND NO ADDITIONAL PAYMENT SHALL BE MADE FOR THIS WORK. COST SHALL BE INCLUDED IN THE BID ITEM FOR WATER MAIN.

HATCH LEGEND

- 1-1/2" ASPHALT PAVEMENT MILL AND OVERLAY AREA
- TRENCH RESTORATION - ASPHALT PAVEMENT - SEE DETAIL SHEET
- TRENCH RESTORATION - CONCRETE PAVEMENT - SEE DETAIL SHEET
- TRENCH RESTORATION - 8" AGGREGATE PAVEMENT
- CONTROL DENSITY FILL - PAV'T TRENCH
- CONCRETE DRIVEWAY REPLACEMENT - SEE DETAIL SHEET
- CONCRETE WALK REPLACEMENT - SEE DETAIL SHEET
- ASPHALT DRIVEWAY REPLACEMENT - SEE DETAIL SHEET
- GRAVEL DRIVEWAY REPLACEMENT - SEE DETAIL SHEET
- CHANNEL LINING, CLASS II - SEE DETAIL SHEET
- * DENOTES PROPERTY WITH NEW SERVICE AND METER SETTING

verdantas
2161 CHAMBER CENTER DRIVE
FORT MITCHELL, KENTUCKY 41017
TEL. (859) 525-0544
WWW.VERDANTAS.COM

NO	REVISION	DATE
.	.	.

ISSUED FOR:	BID
ISSUE DATE:	APRIL 2025
SCALE:	AS SHOWN
DESIGNED BY:	JCOR
DRAWN BY:	JCOR
CHECKED BY:	JSHU

NORTHERN KENTUCKY WATER DISTRICT
SUBDISTRICT 'O'
-KENTON COUNTY -

STEEP CREEK ROAD / DECOURSEY PIKE
STA. 60+00 TO STA. 68+80

PROJECT NO.	
231591	
DISCIPLINE	
CIVIL	
SHEET NAME	
C-09	
SHEET	OF
16	28

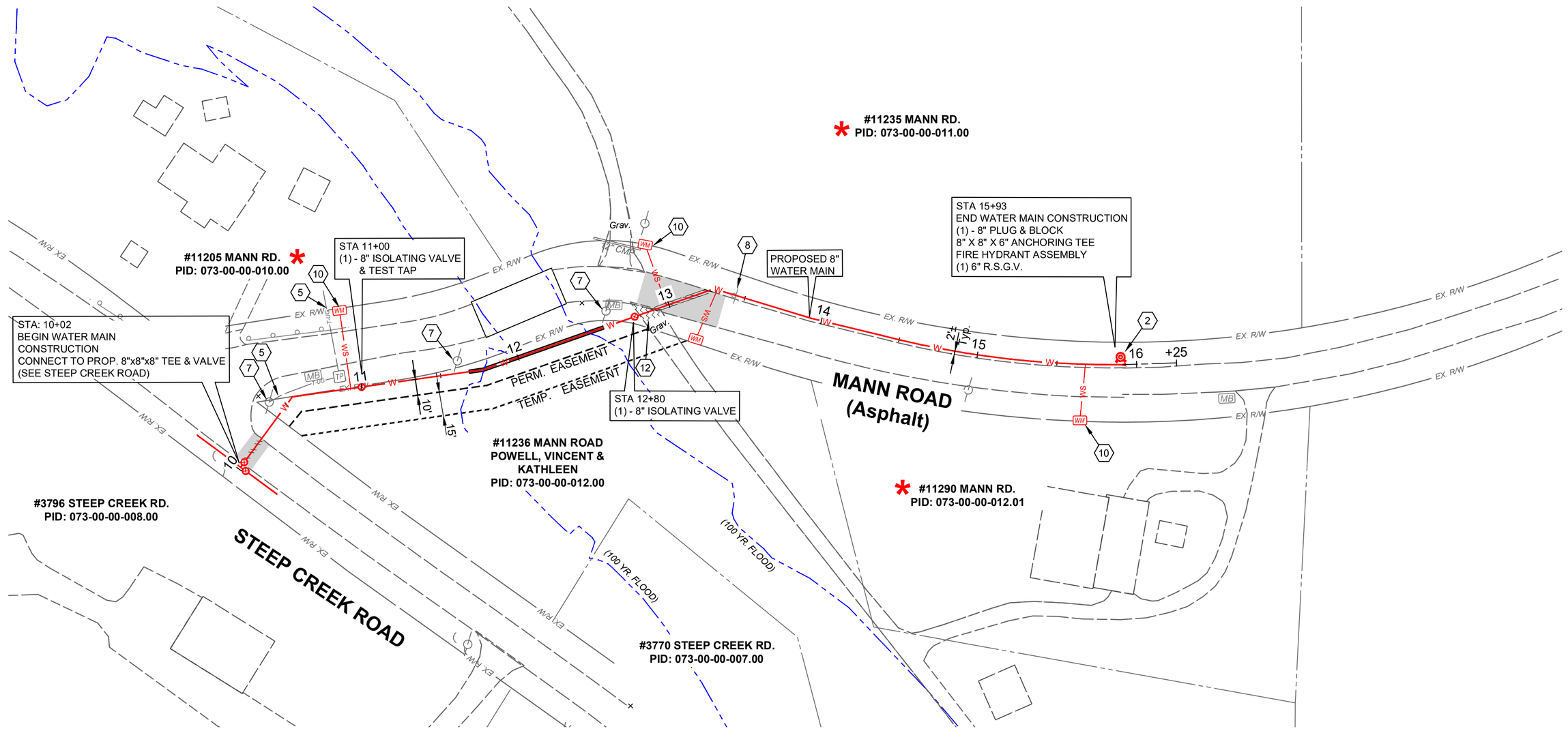

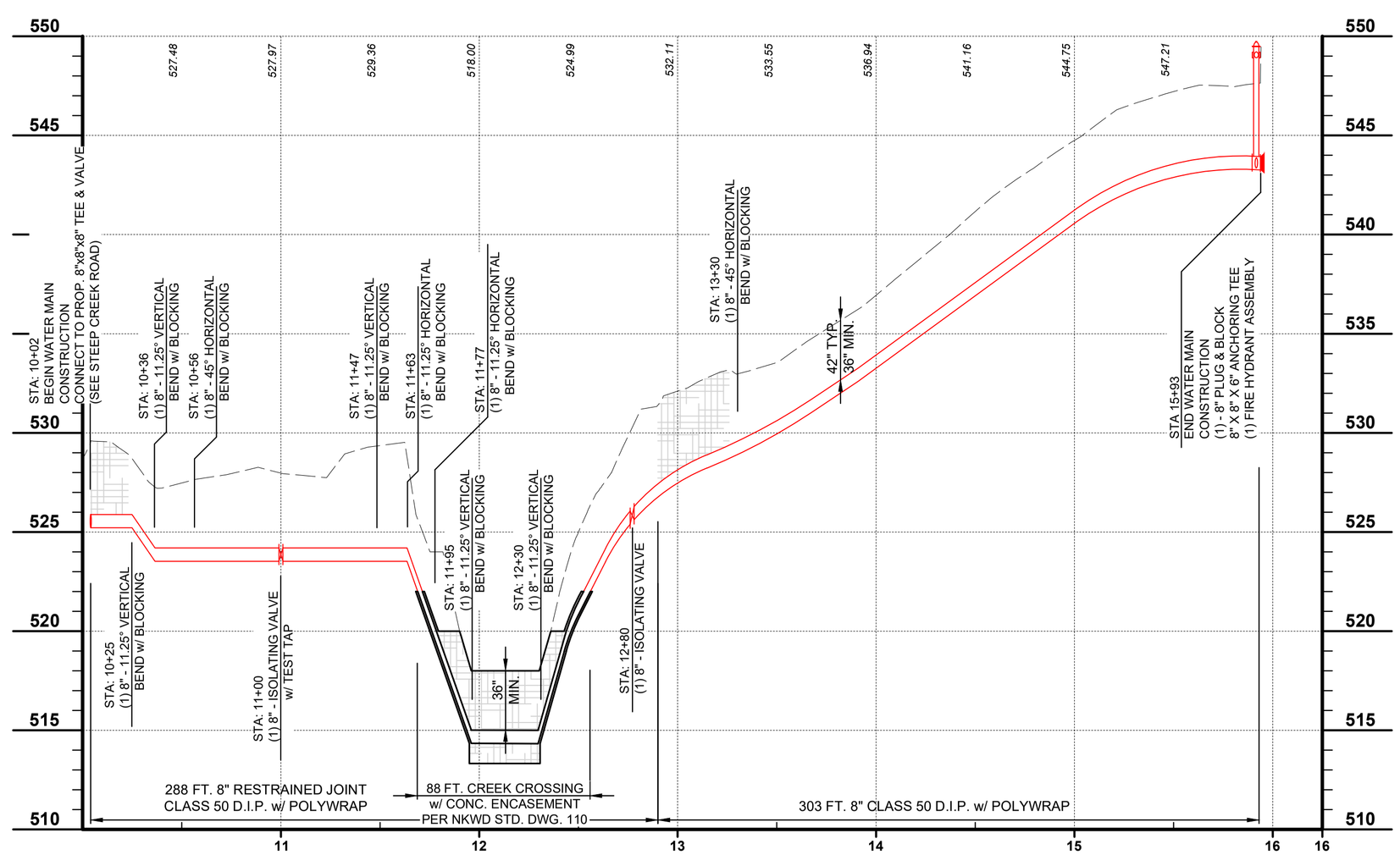

SCALE:
H: 1" = 50'
V: 1" = 5'

0' 50' 100'
SCALE: 1" = 50

CONSTRUCTION NOTES

1. MAINTAIN MANAGEABLE VERTICAL CLEARANCE BETWEEN THE PROPOSED WATER MAIN AND THE EXISTING STORM SEWER, WATER MAIN, TELEPHONE DUCTS, AND GAS MAIN. CONSTRUCT ALL SANITARY SEWER CROSSINGS PER N.K.W.D. SPECIFICATIONS ITEM 1.14. MAINTAIN MINIMUM 18" BETWEEN THE PROPOSED WATER MAIN AND THE EXISTING SANITARY SEWER, ACTUAL ELEVATION UNKNOWN. CONTRACTOR TO EXCAVATE & VERIFY ACTUAL LOCATION, SIZE AND ELEVATION OF EXISTING UTILITY PRIOR TO BEGINNING WATER MAIN CONSTRUCTION. THE CONTRACTOR SHALL NOTIFY THE ENGINEER PRIOR TO CONSTRUCTION OF ANY POTENTIAL CONFLICT. NO ADDITIONAL PAYMENT WILL BE MADE FOR THIS WORK AND THE COST SHALL BE INCLUDED IN THE BID ITEM FOR WATER MAIN.
2. PROPOSED FIRE HYDRANT ASSEMBLY, VALVE AND BLOCKING AS PER N.K.W.D. STD. DRAWING NO. 109. COORDINATE LOCATION WITH N.K.W.D. INSPECTOR. ANCHOR VALVE TO TEE.
3. CONNECT TO EXISTING WATER MAIN (ACTUAL ELEVATION UNKNOWN). CONTRACTOR TO VERIFY DEPTH PRIOR TO CONSTRUCTION.
4. CHANNEL LINING, CLASS II (18") w/ NON-WOVEN GEOTEXTILE FILTER FABRIC
5. CONTRACTOR TO VERIFY LOCATION AND ELEVATION OF UTILITY PRIOR TO EXCAVATION ACTIVITY AND NOTIFY ENGINEER AND N.K.W.D. OF CONFLICTS. (** SEE NOTE)
6. DO NOT DISTURB
7. CONTRACTOR TO SUPPORT UTILITY POLE DURING PIPE INSTALLATION (** SEE NOTE)
8. REMOVE AND REPLACE SIGN (** SEE NOTE)
9. REMOVE AND REPLACE MAILBOX (** SEE NOTE)
10. INSTALL 5/8" METER SETTING PER NKWD STD. DWG. No. 107. INSTALL WATER SERVICE LINE (3/4" TYPE K COPPER) FROM THE PROPOSED WATER MAIN TO THE METER SETTING. MATERIAL WILL BE PROVIDED BY NKWD FOR THIS WORK. UNIT PRICE INCLUDES LABOR, EQUIPMENT, EXCAVATION, BEDDING, BACKFILL, ASPHALT, CONCRETE AND YARD RESTORATION TO INSTALL SERVICE LINE AS SHOWN ON PLANS OR DIRECTED BY NKWD IN ACCORDANCE WITH SPECS & STD. DWGS., COMPLETE.
11. REMOVE & REPLACE STORM STRUCTURE (CB,HW) AS NEEDED FOR WATER MAIN INSTALLATION (** SEE NOTE)
12. DRIVEWAY RESTORATION (SEE DETAILS)
13. TREE TO BE REMOVED

**** NOTE:**

WORK FOR THIS ITEM SHALL BE CONSIDERED INCIDENTAL TO THE OVERALL PROJECT AND NO ADDITIONAL PAYMENT SHALL BE MADE FOR THIS WORK. COST SHALL BE INCLUDED IN THE BID ITEM FOR WATER MAIN.

HATCH LEGEND

- 1-1/2" ASPHALT PAVEMENT MILL AND OVERLAY AREA
- TRENCH RESTORATION - ASPHALT PAVEMENT - SEE DETAIL SHEET
- TRENCH RESTORATION - CONCRETE PAVEMENT - SEE DETAIL SHEET
- TRENCH RESTORATION - 8" AGGREGATE PAVEMENT
- CONTROL DENSITY FILL - PAV'T TRENCH
- CONCRETE DRIVEWAY REPLACEMENT - SEE DETAIL SHEET
- CONCRETE WALK REPLACEMENT - SEE DETAIL SHEET
- ASPHALT DRIVEWAY REPLACEMENT - SEE DETAIL SHEET
- GRAVEL DRIVEWAY REPLACEMENT - SEE DETAIL SHEET
- CHANNEL LINING, CLASS II - SEE DETAIL SHEET
- * DENOTES PROPERTY WITH NEW SERVICE AND METER SETTING

verdantas
2161 CHAMBER CENTER DRIVE
FORT MITCHELL, KENTUCKY 41017
TEL. (859) 525-0544
WWW.VERDANTAS.COM

NO	REVISION	DATE
-	-	-

ISSUED FOR:	BID
ISSUE DATE:	APRIL 2025
SCALE:	AS SHOWN
DESIGNED BY:	JCOR
DRAWN BY:	JCOR
CHECKED BY:	JSHU

NORTHERN KENTUCKY WATER DISTRICT
SUBDISTRICT 'O'
-KENTON COUNTY -

MANN ROAD

PROJECT NO. 231591
DISCIPLINE CIVIL
SHEET NAME C-10
SHEET 17 OF 28

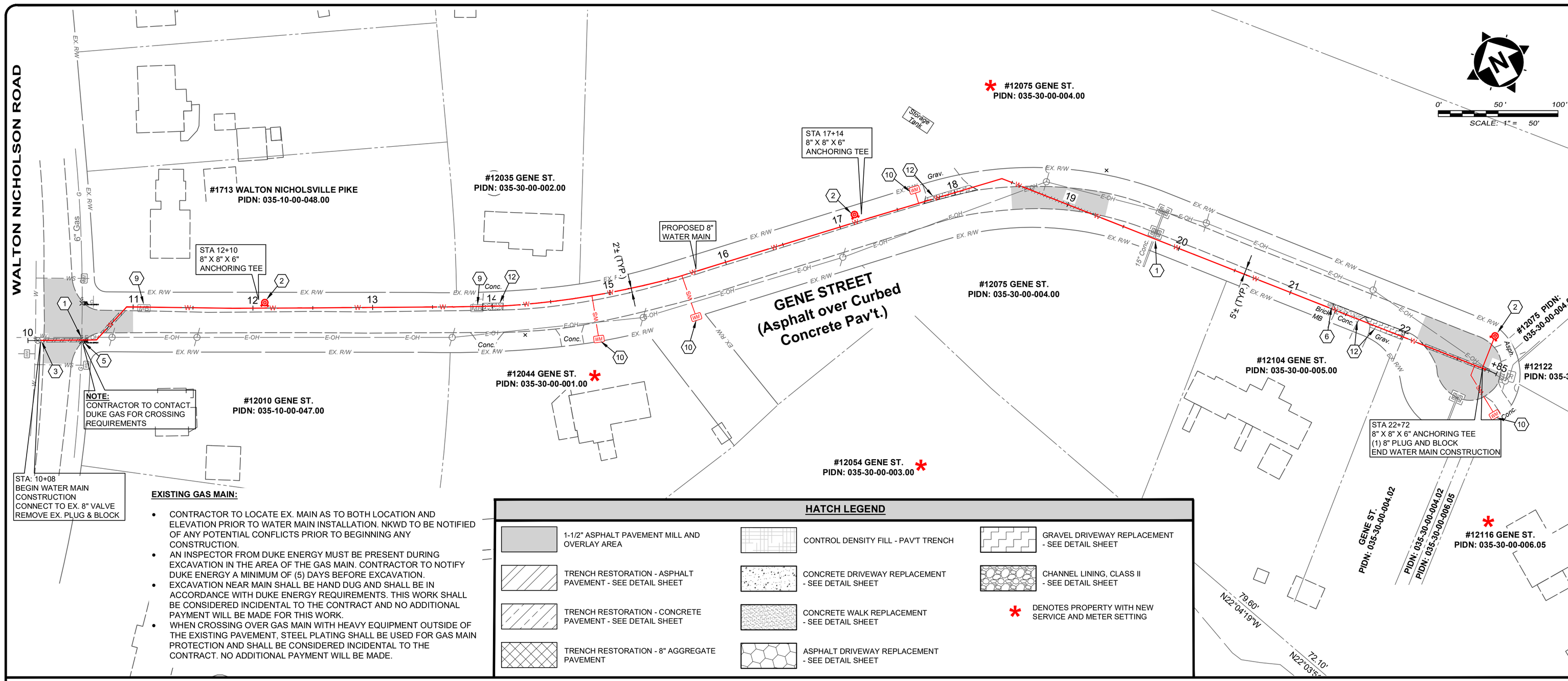

EXISTING GAS MAIN:

- CONTRACTOR TO LOCATE EX. MAIN AS TO BOTH LOCATION AND ELEVATION PRIOR TO WATER MAIN INSTALLATION. NKWD TO BE NOTIFIED OF ANY POTENTIAL CONFLICTS PRIOR TO BEGINNING ANY CONSTRUCTION.
- AN INSPECTOR FROM DUKE ENERGY MUST BE PRESENT DURING EXCAVATION IN THE AREA OF THE GAS MAIN. CONTRACTOR TO NOTIFY DUKE ENERGY A MINIMUM OF (5) DAYS BEFORE EXCAVATION.
- EXCAVATION NEAR MAIN SHALL BE HAND DUG AND SHALL BE IN ACCORDANCE WITH DUKE ENERGY REQUIREMENTS. THIS WORK SHALL BE CONSIDERED INCIDENTAL TO THE CONTRACT AND NO ADDITIONAL PAYMENT WILL BE MADE FOR THIS WORK.
- WHEN CROSSING OVER GAS MAIN WITH HEAVY EQUIPMENT OUTSIDE OF THE EXISTING PAVEMENT, STEEL PLATING SHALL BE USED FOR GAS MAIN PROTECTION AND SHALL BE CONSIDERED INCIDENTAL TO THE CONTRACT. NO ADDITIONAL PAYMENT WILL BE MADE.

HATCH LEGEND

- 1-1/2" ASPHALT PAVEMENT MILL AND OVERLAY AREA
- TRENCH RESTORATION - ASPHALT PAVEMENT - SEE DETAIL SHEET
- TRENCH RESTORATION - CONCRETE PAVEMENT - SEE DETAIL SHEET
- TRENCH RESTORATION - 8" AGGREGATE PAVEMENT
- CONTROL DENSITY FILL - PAV'T TRENCH
- CONCRETE DRIVEWAY REPLACEMENT - SEE DETAIL SHEET
- CONCRETE WALK REPLACEMENT - SEE DETAIL SHEET
- ASPHALT DRIVEWAY REPLACEMENT - SEE DETAIL SHEET
- GRAVEL DRIVEWAY REPLACEMENT - SEE DETAIL SHEET
- CHANNEL LINING, CLASS II - SEE DETAIL SHEET
- * DENOTES PROPERTY WITH NEW SERVICE AND METER SETTING

CONSTRUCTION NOTES

1. MAINTAIN MANAGEABLE VERTICAL CLEARANCE BETWEEN THE PROPOSED WATER MAIN AND THE EXISTING STORM SEWER, WATER MAIN, TELEPHONE DUCTS, AND GAS MAIN. CONSTRUCT ALL SANITARY SEWER CROSSINGS PER N.K.W.D. SPECIFICATIONS ITEM 1.14. MAINTAIN MINIMUM 18" BETWEEN THE PROPOSED WATER MAIN AND THE EXISTING SANITARY SEWER, ACTUAL ELEVATION UNKNOWN. CONTRACTOR TO EXCAVATE & VERIFY ACTUAL LOCATION, SIZE AND ELEVATION OF EXISTING UTILITY PRIOR TO BEGINNING WATER MAIN CONSTRUCTION. THE CONTRACTOR SHALL NOTIFY THE ENGINEER PRIOR TO CONSTRUCTION OF ANY POTENTIAL CONFLICT. NO ADDITIONAL PAYMENT WILL BE MADE FOR THIS WORK AND THE COST SHALL BE INCLUDED IN THE BID ITEM FOR WATER MAIN.
2. PROPOSED FIRE HYDRANT ASSEMBLY, VALVE AND BLOCKING AS PER N.K.W.D. STD. DRAWING NO. 109. COORDINATE LOCATION WITH N.K.W.D. INSPECTOR. ANCHOR VALVE TO TEE.
3. CONNECT TO EXISTING WATER MAIN (ACTUAL ELEVATION UNKNOWN). CONTRACTOR TO VERIFY DEPTH PRIOR TO CONSTRUCTION.
4. CHANNEL LINING, CLASS II (18") w/ NON-WOVEN GEOTEXTILE FILTER FABRIC
5. CONTRACTOR TO VERIFY LOCATION AND ELEVATION OF UTILITY PRIOR TO EXCAVATION ACTIVITY AND NOTIFY ENGINEER AND N.K.W.D. OF CONFLICTS. (** SEE NOTE)
6. DO NOT DISTURB
7. CONTRACTOR TO SUPPORT UTILITY POLE DURING PIPE INSTALLATION (** SEE NOTE)
8. REMOVE AND REPLACE SIGN (** SEE NOTE)
9. REMOVE AND REPLACE MAILBOX (** SEE NOTE)
10. INSTALL 5/8" METER SETTING PER NKWD STD. DWG. No. 107. INSTALL WATER SERVICE LINE (3/4" TYPE K COPPER) FROM THE PROPOSED WATER MAIN TO THE METER SETTING. MATERIAL WILL BE PROVIDED BY NKWD FOR THIS WORK. UNIT PRICE INCLUDES LABOR, EQUIPMENT, EXCAVATION, BEDDING, BACKFILL, ASPHALT, CONCRETE AND YARD RESTORATION TO INSTALL SERVICE LINE AS SHOWN ON PLANS OR DIRECTED BY NKWD IN ACCORDANCE WITH SPECS & STD. DWGS., COMPLETE.
11. REMOVE & REPLACE STORM STRUCTURE (CB,HW) AS NEEDED FOR WATER MAIN INSTALLATION (** SEE NOTE)
12. DRIVEWAY RESTORATION (SEE DETAILS)
13. TREE TO BE REMOVED

** **NOTE:**

WORK FOR THIS ITEM SHALL BE CONSIDERED INCIDENTAL TO THE OVERALL PROJECT AND NO ADDITIONAL PAYMENT SHALL BE MADE FOR THIS WORK. COST SHALL BE INCLUDED IN THE BID ITEM FOR WATER MAIN.

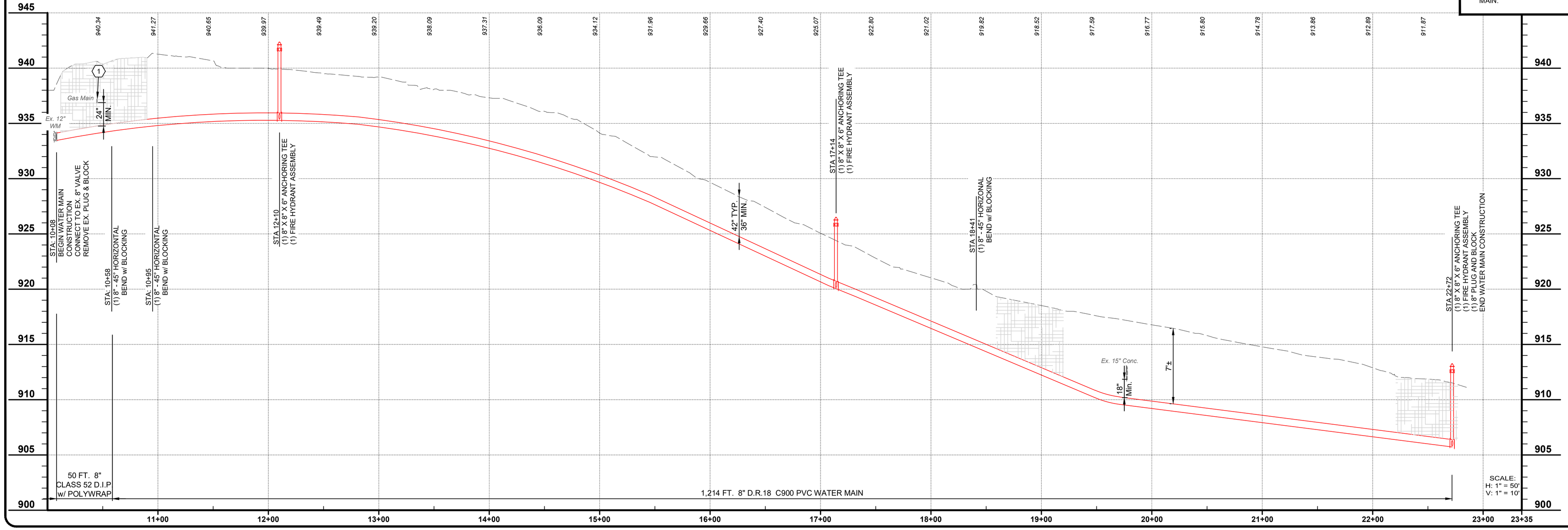

verdantas
2161 CHAMBER CENTER DRIVE
FORT MITCHELL, KENTUCKY 41017
TEL. (859) 525-0544
WWW.VERDANTAS.COM

NO	REVISION	DATE
-	-	-

ISSUED FOR:	BID
ISSUE DATE:	APRIL 2025
SCALE:	AS SHOWN
DESIGNED BY:	JCOR
DRAWN BY:	JCOR
CHECKED BY:	JSHU

NORTHERN KENTUCKY WATER DISTRICT
SUBDISTRICT 'O'
-KENTON COUNTY -

GENE STREET

PROJECT NO.	
231591	
DISCIPLINE	
CIVIL	
SHEET NAME	
C-11	
SHEET	OF
18	28

\\VERDANTAS.COM\CT\PROJECTS\2023\23159\DWG\SHEETS\C_231591 PNP_10_GENE.DWG - GENE - 4/25/2025 10:26:43 AM - JAMES CORNELL

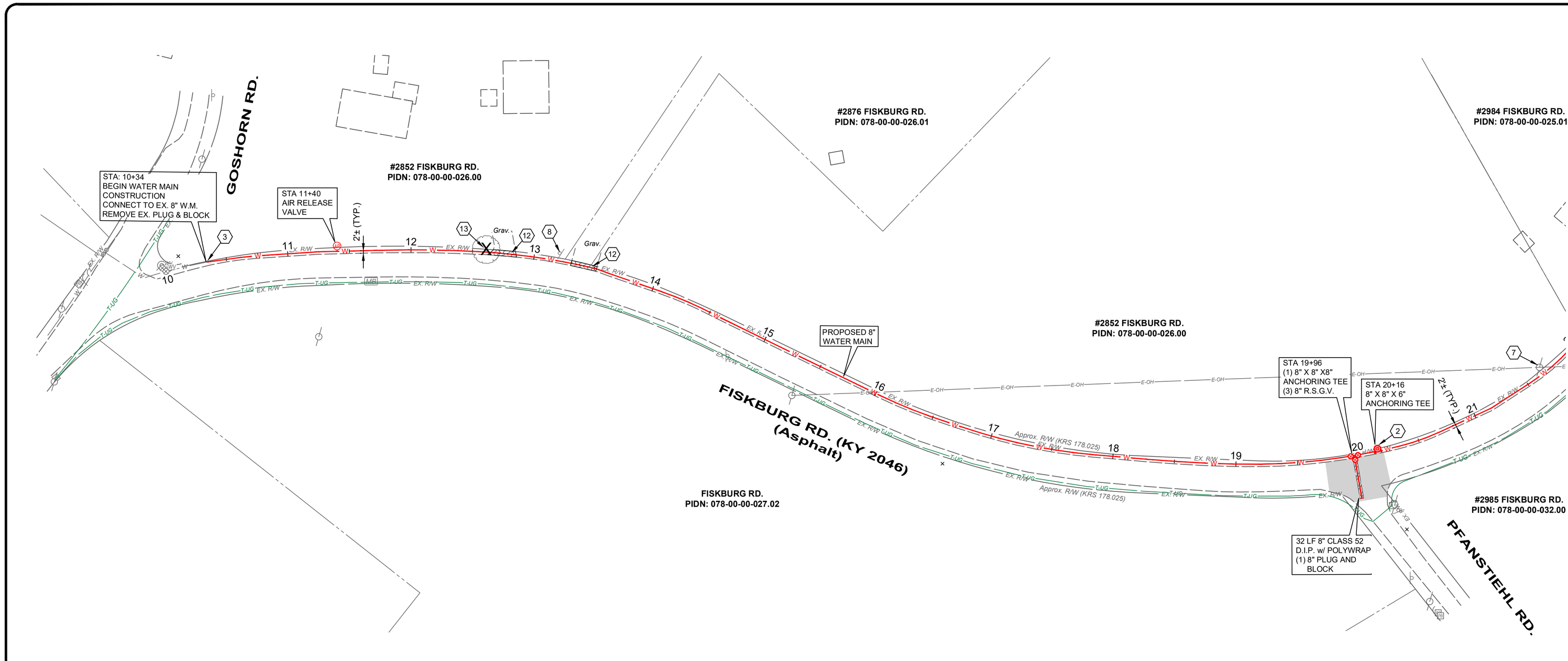

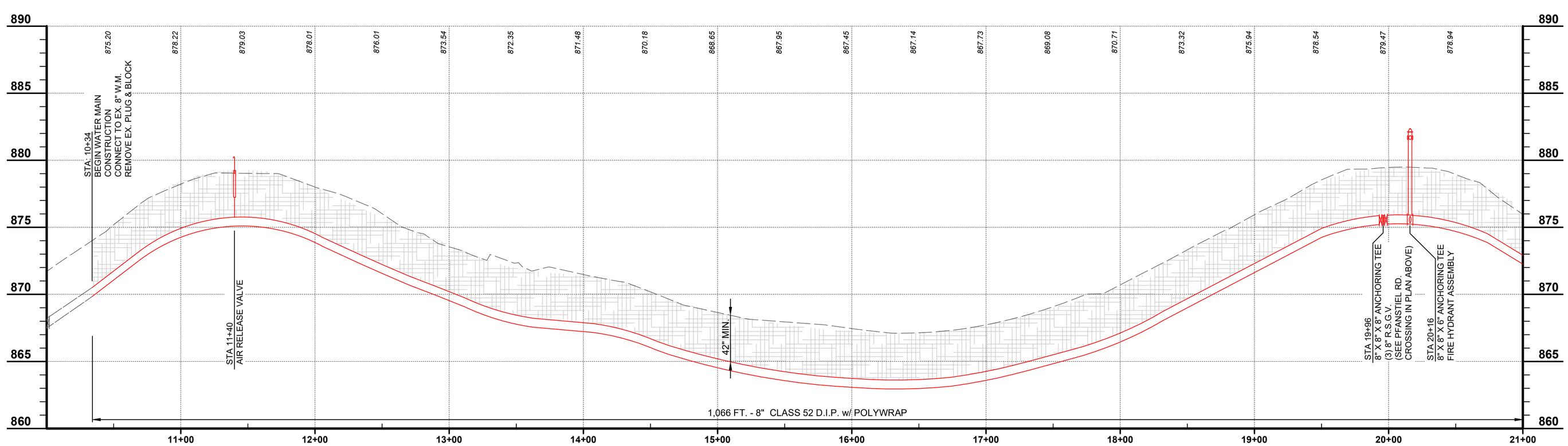

SCALE:
H: 1" = 50'
V: 1" = 5'

0' 50'' 100'
SCALE: 1" = 50

CONSTRUCTION NOTES

1. MAINTAIN MANAGEABLE VERTICAL CLEARANCE BETWEEN THE PROPOSED WATER MAIN AND THE EXISTING STORM SEWER, WATER MAIN, TELEPHONE DUCTS, AND GAS MAIN. CONSTRUCT ALL SANITARY SEWER CROSSINGS PER N.K.W.D. SPECIFICATIONS ITEM 1.14. MAINTAIN MINIMUM 18" BETWEEN THE PROPOSED WATER MAIN AND THE EXISTING SANITARY SEWER, ACTUAL ELEVATION UNKNOWN. CONTRACTOR TO EXCAVATE & VERIFY ACTUAL LOCATION, SIZE AND ELEVATION OF EXISTING UTILITY PRIOR TO BEGINNING WATER MAIN CONSTRUCTION. THE CONTRACTOR SHALL NOTIFY THE ENGINEER PRIOR TO CONSTRUCTION OF ANY POTENTIAL CONFLICT. NO ADDITIONAL PAYMENT WILL BE MADE FOR THIS WORK AND THE COST SHALL BE INCLUDED IN THE BID ITEM FOR WATER MAIN.
2. PROPOSED FIRE HYDRANT ASSEMBLY, VALVE AND BLOCKING AS PER N.K.W.D. STD. DRAWING NO. 109. COORDINATE LOCATION WITH N.K.W.D. INSPECTOR. ANCHOR VALVE TO TEE.
3. CONNECT TO EXISTING WATER MAIN (ACTUAL ELEVATION UNKNOWN). CONTRACTOR TO VERIFY DEPTH PRIOR TO CONSTRUCTION.
4. CHANNEL LINING, CLASS II (18") w/ NON-WOVEN GEOTEXTILE FILTER FABRIC
5. CONTRACTOR TO VERIFY LOCATION AND ELEVATION OF UTILITY PRIOR TO EXCAVATION ACTIVITY AND NOTIFY ENGINEER AND N.K.W.D. OF CONFLICTS. (** SEE NOTE)
6. DO NOT DISTURB
7. CONTRACTOR TO SUPPORT UTILITY POLE DURING PIPE INSTALLATION (** SEE NOTE)
8. REMOVE AND REPLACE SIGN (** SEE NOTE)
9. REMOVE AND REPLACE MAILBOX (** SEE NOTE)
10. INSTALL 5/8" METER SETTING PER NKWD STD. DWG. No. 107. INSTALL WATER SERVICE LINE (3/4" TYPE K COPPER) FROM THE PROPOSED WATER MAIN TO THE METER SETTING. MATERIAL WILL BE PROVIDED BY NKWD FOR THIS WORK. UNIT PRICE INCLUDES LABOR, EQUIPMENT, EXCAVATION, BEDDING, BACKFILL, ASPHALT, CONCRETE AND YARD RESTORATION TO INSTALL SERVICE LINE AS SHOWN ON PLANS OR DIRECTED BY NKWD IN ACCORDANCE WITH SPECS & STD. DWGS., COMPLETE.
11. REMOVE & REPLACE STORM STRUCTURE (CB,HW) AS NEEDED FOR WATER MAIN INSTALLATION (** SEE NOTE)
12. DRIVEWAY RESTORATION (SEE DETAILS)
13. TREE TO BE REMOVED

**** NOTE:**

WORK FOR THIS ITEM SHALL BE CONSIDERED INCIDENTAL TO THE OVERALL PROJECT AND NO ADDITIONAL PAYMENT SHALL BE MADE FOR THIS WORK. COST SHALL BE INCLUDED IN THE BID ITEM FOR WATER MAIN.

HATCH LEGEND

- 1-1/2" ASPHALT PAVEMENT MILL AND OVERLAY AREA
- TRENCH RESTORATION - ASPHALT PAVEMENT - SEE DETAIL SHEET
- TRENCH RESTORATION - CONCRETE PAVEMENT - SEE DETAIL SHEET
- TRENCH RESTORATION - 8" AGGREGATE PAVEMENT
- CONTROL DENSITY FILL - PAV'T TRENCH
- CONCRETE DRIVEWAY REPLACEMENT - SEE DETAIL SHEET
- CONCRETE WALK REPLACEMENT - SEE DETAIL SHEET
- ASPHALT DRIVEWAY REPLACEMENT - SEE DETAIL SHEET
- GRAVEL DRIVEWAY REPLACEMENT - SEE DETAIL SHEET
- CHANNEL LINING, CLASS II - SEE DETAIL SHEET
- * DENOTES PROPERTY WITH NEW SERVICE AND METER SETTING

verdantas
2161 CHAMBER CENTER DRIVE
FORT MITCHELL, KENTUCKY 41017
TEL. (859) 525-0544
WWW.VERDANTAS.COM

NO	REVISION	DATE
-	-	-

ISSUED FOR:	BID
ISSUE DATE:	APRIL 2025
SCALE:	AS SHOWN
DESIGNED BY:	JCOR
DRAWN BY:	JCOR
CHECKED BY:	JSHU

NORTHERN KENTUCKY WATER DISTRICT
SUBDISTRICT 'O'
-KENTON COUNTY -

FISKBURG ROAD
STA. 10+00 TO STA. 21+00

PROJECT NO.
231591
DISCIPLINE
CIVIL
SHEET NAME
C-12
SHEET 19 OF 28

\\VERDANTAS.COM\CFWI\JOB\TS\232\231591\DWG\SHEETS\C_231591.PNP 1:1, PDF\BW.PC3, DWG - FISKBURG-2 - 4/10/2025 4:52:55 PM - JAMES CONNELL

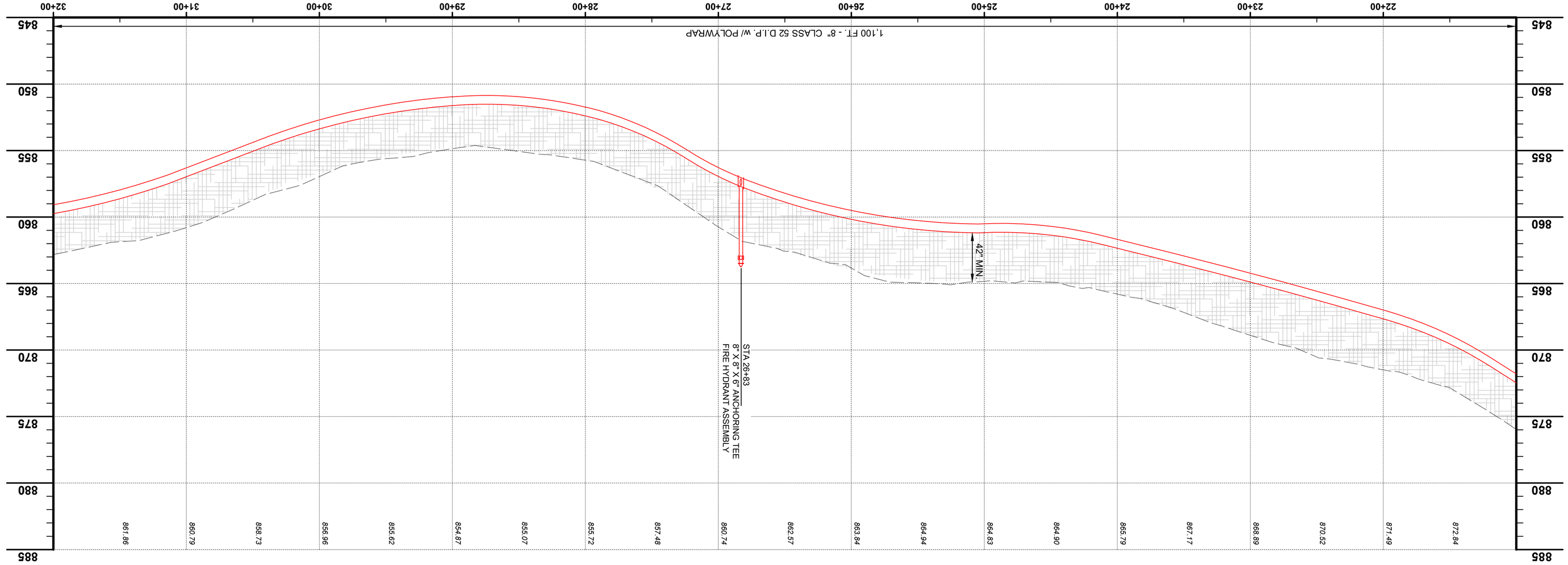

SCALE:
H: 1" = 50'
V: 1" = 5'

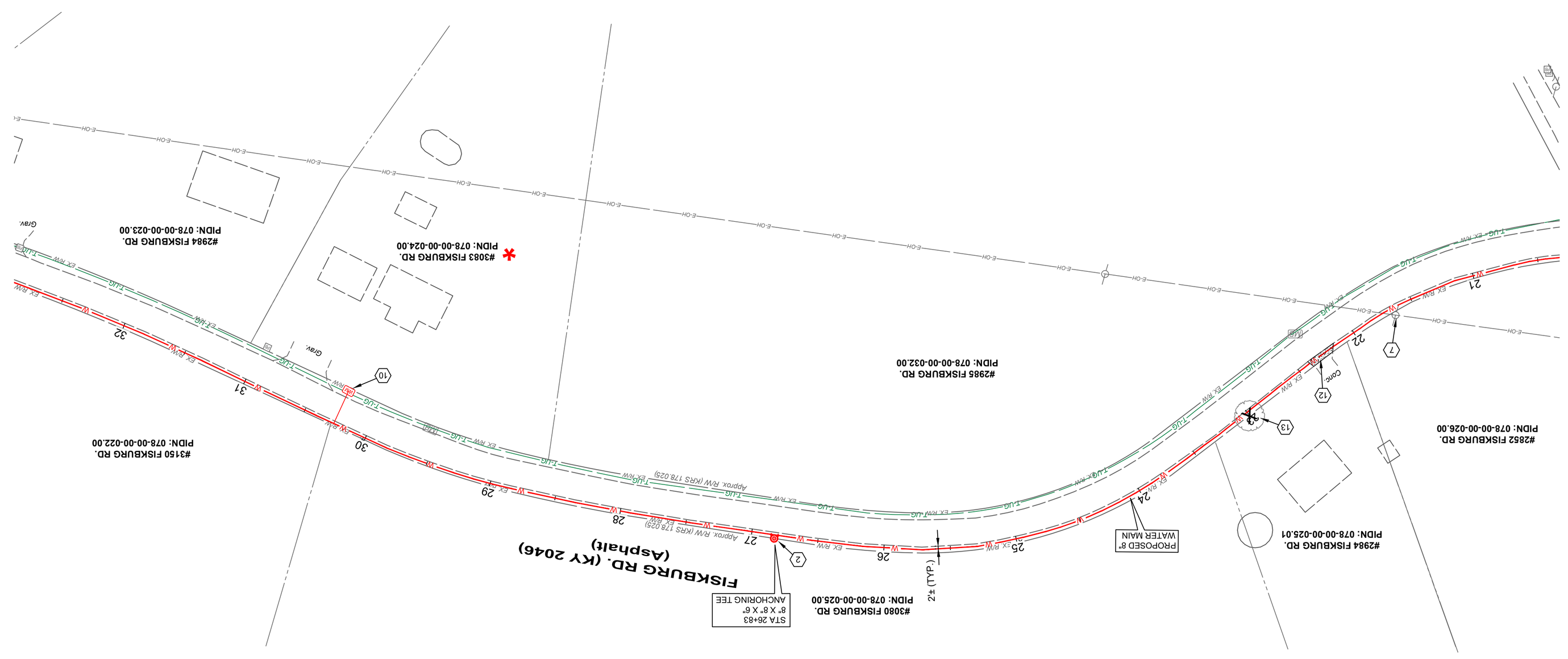

SCALE: 1" = 50'

CONSTRUCTION NOTES

1. MAINTAIN MANAGEABLE VERTICAL CLEARANCE BETWEEN THE PROPOSED WATER MAIN AND THE EXISTING STORM SEWER, WATER MAIN, TELEPHONE DUCTS, AND GAS MAIN. CONSTRUCT ALL SANITARY SEWER CROSSINGS PER N.K.W.D. SPECIFICATIONS ITEM 1.14. MAINTAIN MINIMUM 18" BETWEEN THE PROPOSED WATER MAIN AND THE EXISTING SANITARY SEWER. ACTUAL ELEVATION UNKNOWN. CONTRACTOR TO EXCAVATE & VERIFY ACTUAL LOCATION, SIZE AND ELEVATION OF EXISTING UTILITY PRIOR TO BEGINNING WATER MAIN CONSTRUCTION. THE CONTRACTOR SHALL NOTIFY THE ENGINEER PRIOR TO CONSTRUCTION OF ANY POTENTIAL CONFLICT. NO ADDITIONAL PAYMENT WILL BE MADE FOR THIS WORK AND THE COST SHALL BE INCLUDED IN THE BID ITEM FOR WATER MAIN.
2. PROPOSED FIRE HYDRANT ASSEMBLY, VALVE AND BLOCKING AS PER N.K.W.D. STD. DRAWING NO. 109. COORDINATE LOCATION WITH N.K.W.D. INSPECTOR. ANCHOR VALVE TO TEE.
3. CONNECT TO EXISTING WATER MAIN (ACTUAL ELEVATION UNKNOWN). CONTRACTOR TO VERIFY DEPTH PRIOR TO CONSTRUCTION.
4. CHANNEL LINING, CLASS II (18") w/ NON-WOVEN GEOTEXTILE FILTER FABRIC
5. CONTRACTOR TO VERIFY LOCATION AND ELEVATION OF UTILITY PRIOR TO EXCAVATION ACTIVITY AND NOTIFY ENGINEER AND N.K.W.D. OF CONFLICTS. (** SEE NOTE)
6. DO NOT DISTURB
7. CONTRACTOR TO SUPPORT UTILITY POLE DURING PIPE INSTALLATION (** SEE NOTE)
8. REMOVE AND REPLACE SIGN (** SEE NOTE)
9. REMOVE AND REPLACE MAILBOX (** SEE NOTE)
10. INSTALL 5/8" METER SETTING PER NKWD STD. DWG. No. 107. INSTALL WATER SERVICE LINE (3/4" TYPE K COPPER) FROM THE PROPOSED WATER MAIN TO THE METER SETTING. MATERIAL WILL BE PROVIDED BY NKWD FOR THIS WORK. UNIT PRICE INCLUDES LABOR, EQUIPMENT, EXCAVATION, BEDDING, BACKFILL, ASPHALT, CONCRETE AND YARD RESTORATION TO DIRECTED BY NKWD IN ACCORDANCE WITH SPECS & STD. DWGS.. COMPLETE.
11. REMOVE & REPLACE STORM STRUCTURE (CB,HW) AS NEEDED FOR WATER MAIN INSTALLATION (** SEE NOTE)
12. DRIVEWAY RESTORATION (SEE DETAILS)
13. TREE TO BE REMOVED

**** NOTE:**
WORK FOR THIS ITEM SHALL BE CONSIDERED INCIDENTAL TO THE OVERALL PROJECT AND NO ADDITIONAL PAYMENT SHALL BE MADE FOR THIS WORK. COST SHALL BE INCLUDED IN THE BID ITEM FOR WATER MAIN.

HATCH LEGEND

- 1-1/2" ASPHALT PAVEMENT MILL AND OVERLAY AREA
- TRENCH RESTORATION - ASPHALT PAVEMENT - SEE DETAIL SHEET
- TRENCH RESTORATION - CONCRETE PAVEMENT - SEE DETAIL SHEET
- TRENCH RESTORATION - 6" AGGREGATE PAVEMENT
- CONTROL DENSITY FILL - PAVT TRENCH
- CONCRETE DRIVEWAY REPLACEMENT - SEE DETAIL SHEET
- CONCRETE WALK REPLACEMENT - SEE DETAIL SHEET
- ASPHALT DRIVEWAY REPLACEMENT - SEE DETAIL SHEET
- GRAVEL DRIVEWAY REPLACEMENT - SEE DETAIL SHEET
- CHANNEL LINING, CLASS II - SEE DETAIL SHEET
- * DENOTES PROPERTY WITH NEW SERVICE AND METER SETTING

NORTHERN KENTUCKY WATER DISTRICT
SUBDISTRICT 'O'
-KENTON COUNTY -

FISKBURG ROAD
STA. 21+00 TO STA. 32+00

PROJECT NO.	DISCIPLINE	SHEET NAME	SHEET	OF
231591	CIVIL	C-13	20	28

ISSUED FOR:	BID
ISSUE DATE:	APRIL 2025
SCALE:	AS SHOWN
DESIGNED BY:	JCOR
DRAWN BY:	JCOR
CHECKED BY:	JHSF

NO	REVISION	DATE
-	-	-

verdantas
2161 CHAMBER CENTER DRIVE
FORT MITCHELL, KENTUCKY 41017
TEL: (859) 525-0544
WWW.VERDANTAS.COM

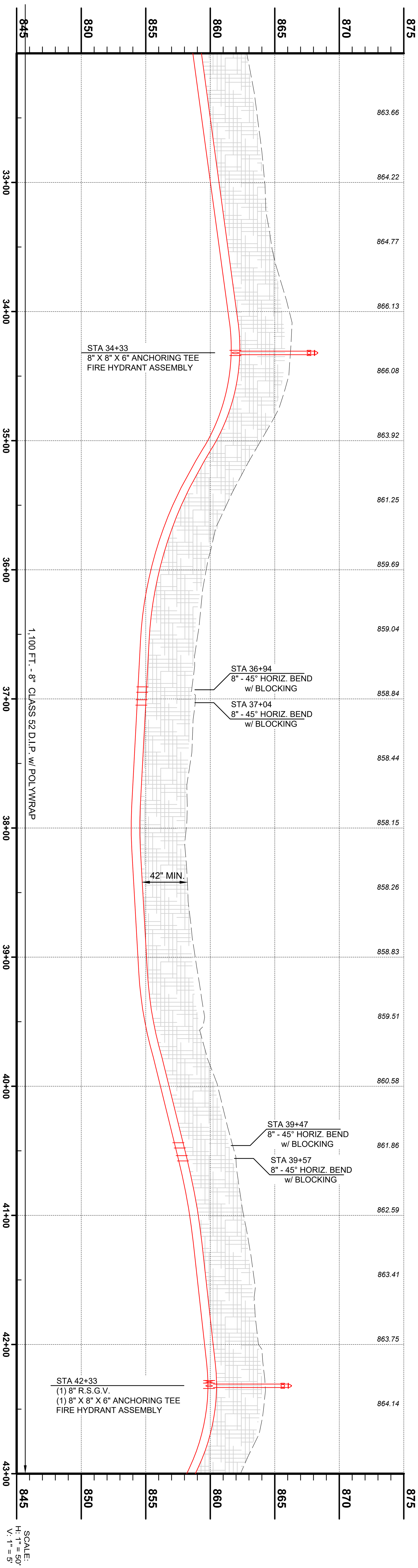

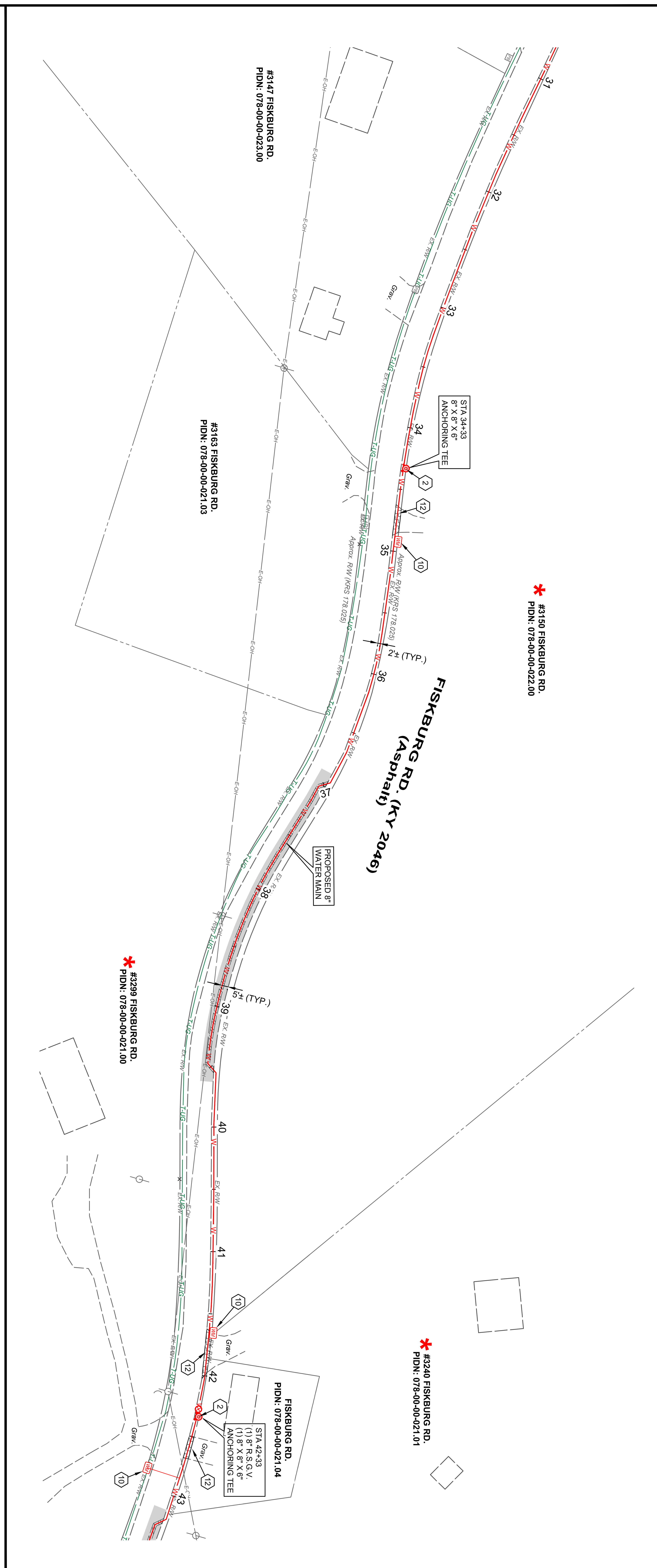

SCALE: 1" = 50

CONSTRUCTION NOTES

1. MAINTAIN MANAGEABLE VERTICAL CLEARANCE BETWEEN THE PROPOSED WATER MAIN AND THE EXISTING STORM SEWER, WATER MAIN, TELEPHONE DUCTS, AND GAS MAIN. CONSTRUCT ALL SANITARY SEWER CROSSINGS PER N.K.W.D. SPECIFICATIONS ITEM 1.14. MAINTAIN MINIMUM 18" BETWEEN THE PROPOSED WATER MAIN AND THE EXISTING SANITARY SEWER, ACTUAL ELEVATION UNKNOWN. CONTRACTOR TO EXCAVATE & VERIFY ACTUAL LOCATION, SIZE AND ELEVATION OF EXISTING UTILITY PRIOR TO BEGINNING WATER MAIN CONSTRUCTION. THE CONTRACTOR SHALL NOTIFY THE ENGINEER PRIOR TO CONSTRUCTION OF ANY POTENTIAL CONFLICT. NO ADDITIONAL PAYMENT WILL BE MADE FOR THIS WORK AND THE COST SHALL BE INCLUDED IN THE BID ITEM FOR WATER MAIN.
2. PROPOSED FIRE HYDRANT ASSEMBLY, VALVE AND BLOCKING AS PER N.K.W.D. STD. DRAWING NO. 109. COORDINATE LOCATION WITH N.K.W.D. INSPECTOR. ANCHOR VALVE TO TEE.
3. CONNECT TO EXISTING WATER MAIN (ACTUAL ELEVATION UNKNOWN). CONTRACTOR TO VERIFY DEPTH PRIOR TO CONSTRUCTION.
4. CHANNEL LINING, CLASS II (18") w/ NON-WOVEN GEOTEXTILE FILTER FABRIC
5. CONTRACTOR TO VERIFY LOCATION AND ELEVATION OF UTILITY PRIOR TO EXCAVATION ACTIVITY AND NOTIFY ENGINEER AND N.K.W.D. OF CONFLICTS. (** SEE NOTE)
6. DO NOT DISTURB
7. CONTRACTOR TO SUPPORT UTILITY POLE DURING PIPE INSTALLATION (** SEE NOTE)
8. REMOVE AND REPLACE SIGN (** SEE NOTE)
9. REMOVE AND REPLACE MAILBOX (** SEE NOTE)
10. INSTALL 5/8" METER SETTING PER NKWD STD. DWG. No. 107. INSTALL WATER SERVICE LINE (3/4" TYPE K COPPER) FROM THE PROPOSED WATER MAIN TO THE METER SETTING. MATERIAL WILL BE PROVIDED BY NKWD FOR THIS WORK. UNIT PRICE INCLUDES LABOR, EQUIPMENT, EXCAVATION, BEDDING, BACKFILL, ASPHALT, CONCRETE AND YARD RESTORATION TO INSTALL SERVICE LINE AS SHOWN ON PLANS OR DIRECTED BY NKWD IN ACCORDANCE WITH SPECS & STD. DWGS., COMPLETE.
11. REMOVE & REPLACE STORM STRUCTURE (CB,HW) AS NEEDED FOR WATER MAIN INSTALLATION (** SEE NOTE)
12. DRIVEWAY RESTORATION (SEE DETAILS)
13. TREE TO BE REMOVED

** **NOTE:**
WORK FOR THIS ITEM SHALL BE CONSIDERED INCIDENTAL TO THE OVERALL PROJECT AND NO ADDITIONAL PAYMENT SHALL BE MADE FOR THIS WORK. COST SHALL BE INCLUDED IN THE BID ITEM FOR WATER MAIN.

HATCH LEGEND

- 1-1/2" ASPHALT PAVEMENT MILL AND OVERLAY AREA
- TRENCH RESTORATION - ASPHALT PAVEMENT - SEE DETAIL SHEET
- TRENCH RESTORATION - CONCRETE PAVEMENT - SEE DETAIL SHEET
- TRENCH RESTORATION - 8" AGGREGATE PAVEMENT
- CONTROL DENSITY FILL - PAV'T TRENCH
- CONCRETE DRIVEWAY REPLACEMENT - SEE DETAIL SHEET
- CONCRETE WALK REPLACEMENT - SEE DETAIL SHEET
- ASPHALT DRIVEWAY REPLACEMENT - SEE DETAIL SHEET
- GRAVEL DRIVEWAY REPLACEMENT - SEE DETAIL SHEET
- CHANNEL LINING, CLASS II - SEE DETAIL SHEET
- * DENOTES PROPERTY WITH NEW SERVICE AND METER SETTING

NORTHERN KENTUCKY WATER DISTRICT
SUBDISTRICT 'O'
-KENTON COUNTY -

FISKBURG ROAD
STA. 32+00 TO STA. 43+00

ISSUED FOR:	BID
ISSUE DATE:	APRIL 2025
SCALE:	AS SHOWN
DESIGNED BY:	JCOR
DRAWN BY:	JCOR
CHECKED BY:	JSHU

NO	REVISION	DATE
.	.	.

PROJECT NO. 231591
DISCIPLINE CIVIL
SHEET NAME C-14
SHEET 21 OF 28

verdantas
2161 CHAMBER CENTER DRIVE
FORT MITCHELL, KENTUCKY 41017
TEL. (859) 525-0544
WWW.VERDANTAS.COM

\\VERDANTAS.COM\CT\PROJECTS\2023\231591\DWG\SHEETS\C_231591 PNP_13_FISKBURG.DWG - FISKBURG-3 - 4/18/2025 4:52:55 PM - JAMES CORNELL

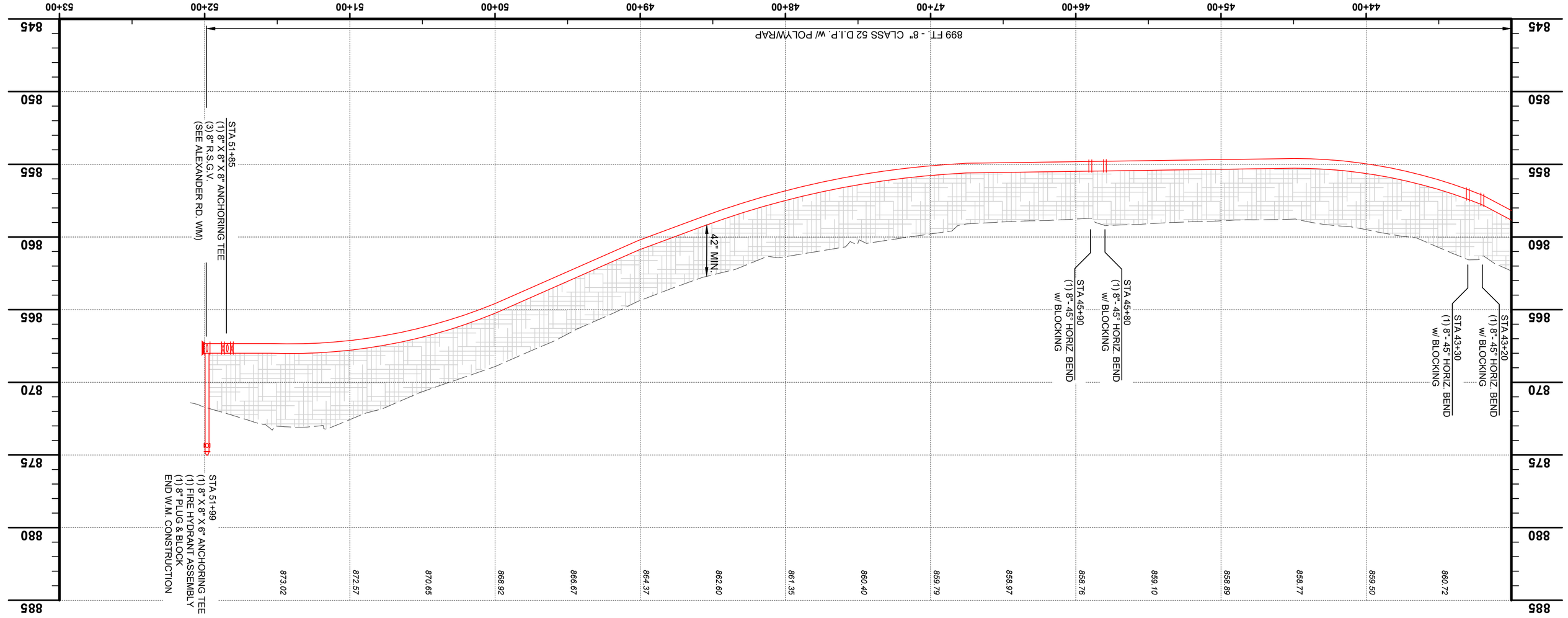

SCALE:
H: 1" = 60'
V: 1" = 5'

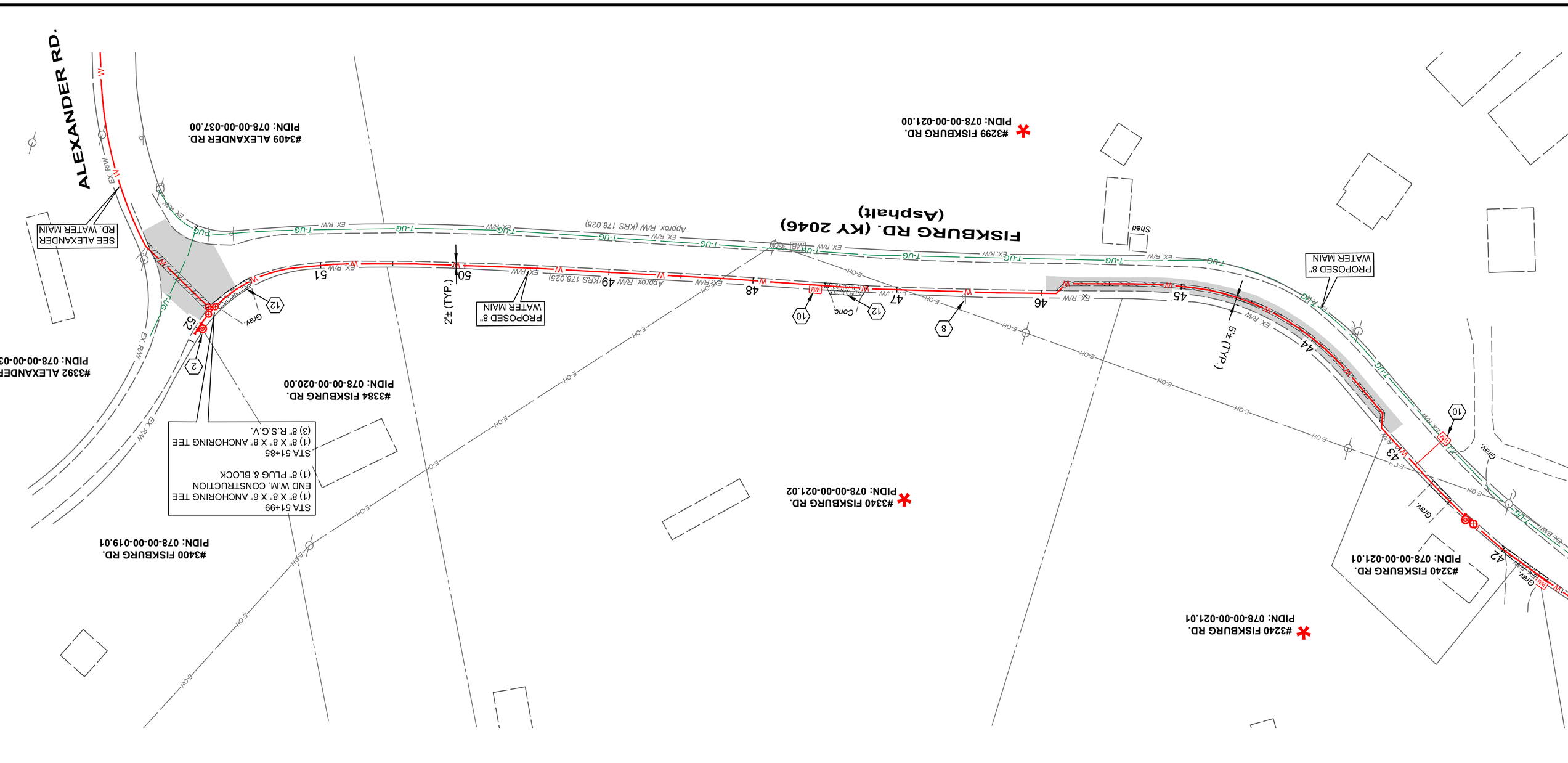

CONSTRUCTION NOTES

1. MAINTAIN MANAGEABLE VERTICAL CLEARANCE BETWEEN THE PROPOSED WATER MAIN AND THE EXISTING STORM SEWER, WATER MAIN, TELEPHONE DUCTS, AND GAS MAIN. CONSTRUCT ALL SANITARY SEWER CROSSINGS PER N.K.W.D. SPECIFICATIONS ITEM 1.14. MAINTAIN MINIMUM 18" BETWEEN THE PROPOSED WATER MAIN AND THE EXISTING SANITARY SEWER. ACTUAL ELEVATION UNKNOWN. CONTRACTOR TO EXCAVATE & VERIFY ACTUAL LOCATION, SIZE AND ELEVATION OF EXISTING UTILITY PRIOR TO BEGINNING WATER MAIN CONSTRUCTION. THE CONTRACTOR SHALL NOTIFY THE ENGINEER PRIOR TO CONSTRUCTION OF ANY POTENTIAL CONFLICT. NO ADDITIONAL PAYMENT WILL BE MADE FOR THIS WORK AND THE COST SHALL BE INCLUDED IN THE BID ITEM FOR WATER MAIN.
2. PROPOSED FIRE HYDRANT ASSEMBLY, VALVE AND BLOCKING AS PER N.K.W.D. STD. DRAWING NO. 109. COORDINATE LOCATION WITH N.K.W.D. INSPECTOR. ANCHOR VALVE TO TEE.
3. CONNECT TO EXISTING WATER MAIN (ACTUAL ELEVATION UNKNOWN). CONTRACTOR TO VERIFY DEPTH PRIOR TO CONSTRUCTION.
4. CHANNEL LINING, CLASS II (18") w/ NON-WOVEN GEOTEXTILE FILTER FABRIC
5. CONTRACTOR TO VERIFY LOCATION AND ELEVATION OF UTILITY PRIOR TO EXCAVATION ACTIVITY AND NOTIFY ENGINEER AND N.K.W.D. OF CONFLICTS. (** SEE NOTE)
6. DO NOT DISTURB
7. CONTRACTOR TO SUPPORT UTILITY POLE DURING PIPE INSTALLATION (** SEE NOTE)
8. REMOVE AND REPLACE SIGN (** SEE NOTE)
9. REMOVE AND REPLACE MAILBOX (** SEE NOTE)
10. INSTALL 5/8" METER SETTING PER NKWD STD. DWG. No. 107. INSTALL WATER SERVICE LINE (3/4" TYPE K COPPER) FROM THE PROPOSED WATER MAIN TO THE METER SETTING. MATERIAL WILL BE PROVIDED BY NKWD FOR THIS WORK. UNIT PRICE INCLUDES LABOR, EQUIPMENT, EXCAVATION, BEDDING, BACKFILL, ASPHALT, CONCRETE AND YARD RESTORATION TO INSTALL SERVICE LINE AS SHOWN ON PLANS OR DIRECTED BY NKWD IN ACCORDANCE WITH SPECS & STD. DWGS., COMPLETE.
11. REMOVE & REPLACE STORM STRUCTURE (GB,HW) AS NEEDED FOR WATER MAIN INSTALLATION (** SEE NOTE)
12. DRIVEWAY RESTORATION (SEE DETAILS)
13. TREE TO BE REMOVED

**** NOTE:**
WORK FOR THIS ITEM SHALL BE CONSIDERED INCIDENTAL TO THE OVERALL PROJECT AND NO ADDITIONAL PAYMENT SHALL BE MADE FOR THIS WORK. COST SHALL BE INCLUDED IN THE BID ITEM FOR WATER MAIN.

HATCH LEGEND

- 1-1/2" ASPHALT PAVEMENT MILL AND OVERLAY AREA
- TRENCH RESTORATION - ASPHALT PAVEMENT - SEE DETAIL SHEET
- TRENCH RESTORATION - CONCRETE PAVEMENT - SEE DETAIL SHEET
- TRENCH RESTORATION - 8" AGGREGATE PAVEMENT
- CONTROL DENSITY FILL - PAVT TRENCH
- CONCRETE DRIVEWAY REPLACEMENT - SEE DETAIL SHEET
- CONCRETE WALK REPLACEMENT - SEE DETAIL SHEET
- ASPHALT DRIVEWAY REPLACEMENT - SEE DETAIL SHEET
- GRAVEL DRIVEWAY REPLACEMENT - SEE DETAIL SHEET
- CHANNEL LINING, CLASS II - SEE DETAIL SHEET
- * DENOTES PROPERTY WITH NEW SERVICE AND METER SETTING

SCALE: 1" = 50'
0' 50' 100'

verdantas
2161 CHAMBER CENTER DRIVE
FORT MITCHELL, KENTUCKY 41017
TEL. (859) 525-0544
WWW.VERDANTAS.COM

NO	REVISION	DATE
.	.	.

ISSUED FOR:	BID
ISSUE DATE:	APRIL 2025
SCALE:	AS SHOWN
DESIGNED BY:	JCOR
DRAWN BY:	JCOR
CHECKED BY:	JSHU

NORTHERN KENTUCKY WATER DISTRICT
SUBDISTRICT 'O'
-KENTON COUNTY -

FISKBURG ROAD
STA. 43+00 TO STA. 52+27

PROJECT NO.
231591
DISCIPLINE
CIVIL
SHEET NAME
C-15
SHEET 22 OF 28

V:\ENGDATA\CONCRTPWO\CTS\32\32231\SRCWD\SHEETS\C_15.DWG PAT:"LT_FIBERLINE.CTB" PAGESETUP:NONE PLOTSTYLE:COLOR.CTB PLOTTED BY: JAMES O'NEILL 4/18/2025 4:52:55 PM

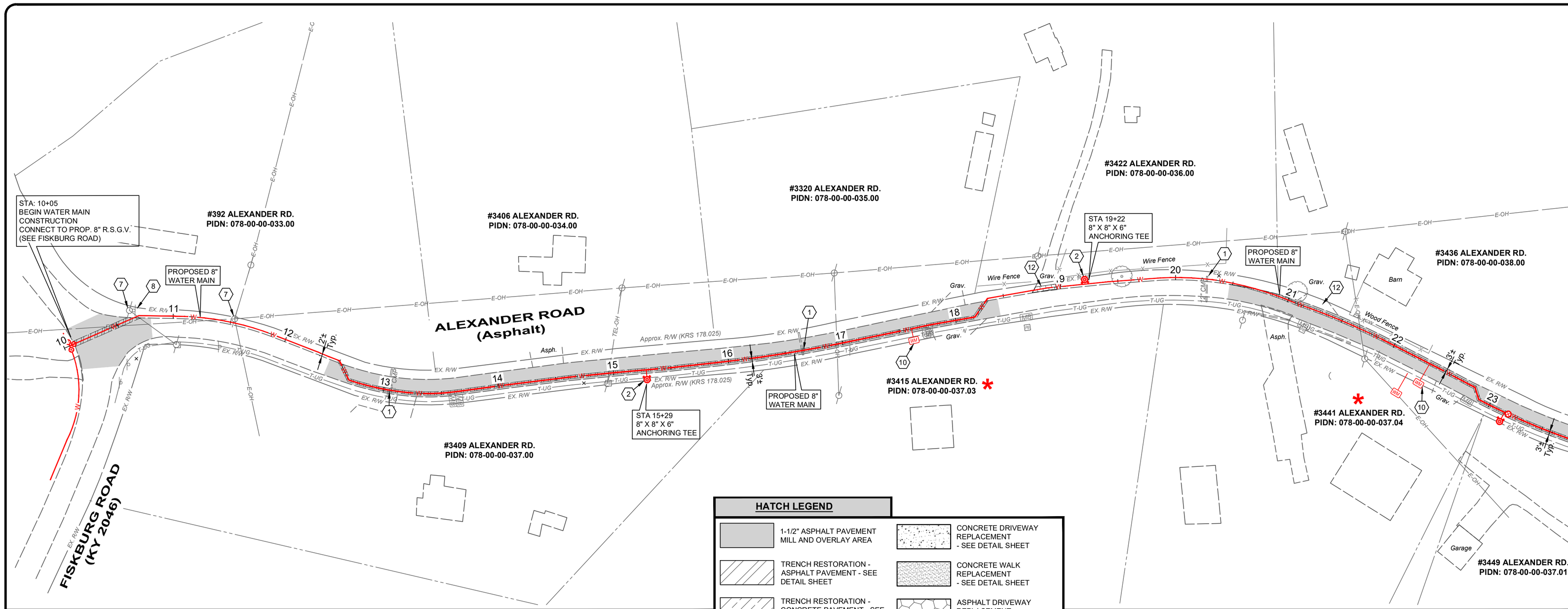

HATCH LEGEND

- 1-1/2" ASPHALT PAVEMENT MILL AND OVERLAY AREA
- TRENCH RESTORATION - ASPHALT PAVEMENT - SEE DETAIL SHEET
- TRENCH RESTORATION - CONCRETE PAVEMENT - SEE DETAIL SHEET
- TRENCH RESTORATION - 8" AGGREGATE PAVEMENT
- CONTROL DENSITY FILL - PAV'T TRENCH
- CONCRETE DRIVEWAY REPLACEMENT - SEE DETAIL SHEET
- CONCRETE WALK REPLACEMENT - SEE DETAIL SHEET
- ASPHALT DRIVEWAY REPLACEMENT - SEE DETAIL SHEET
- GRAVEL DRIVEWAY REPLACEMENT - SEE DETAIL SHEET
- CHANNEL LINING, CLASS II - SEE DETAIL SHEET
- * DENOTES PROPERTY WITH NEW SERVICE AND METER SETTING

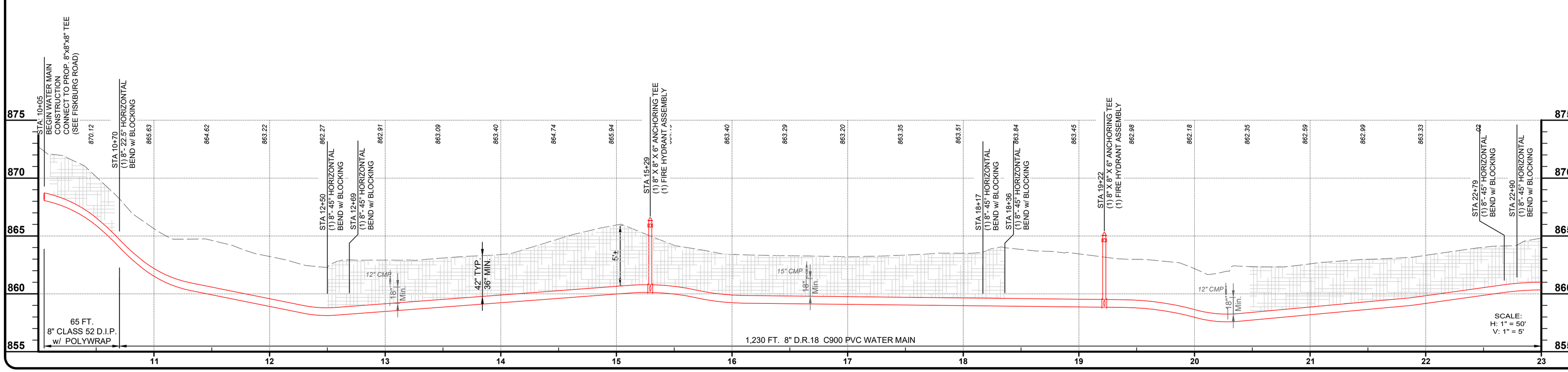

CONSTRUCTION NOTES

1. MAINTAIN MANAGEABLE VERTICAL CLEARANCE BETWEEN THE PROPOSED WATER MAIN AND THE EXISTING STORM SEWER, WATER MAIN, TELEPHONE DUCTS, AND GAS MAIN. CONSTRUCT ALL SANITARY SEWER CROSSINGS PER N.K.W.D. SPECIFICATIONS ITEM 1.14. MAINTAIN MINIMUM 18" BETWEEN THE PROPOSED WATER MAIN AND THE EXISTING SANITARY SEWER, ACTUAL ELEVATION UNKNOWN. CONTRACTOR TO EXCAVATE & VERIFY ACTUAL LOCATION, SIZE AND ELEVATION OF EXISTING UTILITY PRIOR TO BEGINNING WATER MAIN CONSTRUCTION. THE CONTRACTOR SHALL NOTIFY THE ENGINEER PRIOR TO CONSTRUCTION OF ANY POTENTIAL CONFLICT. NO ADDITIONAL PAYMENT WILL BE MADE FOR THIS WORK AND THE COST SHALL BE INCLUDED IN THE BID ITEM FOR WATER MAIN.
2. PROPOSED FIRE HYDRANT ASSEMBLY, VALVE AND BLOCKING AS PER N.K.W.D. STD. DRAWING NO. 109. COORDINATE LOCATION WITH N.K.W.D. INSPECTOR. ANCHOR VALVE TO TEE.
3. CONNECT TO EXISTING WATER MAIN (ACTUAL ELEVATION UNKNOWN). CONTRACTOR TO VERIFY DEPTH PRIOR TO CONSTRUCTION.
4. CHANNEL LINING, CLASS II (18") w/ NON-WOVEN GEOTEXTILE FILTER FABRIC
5. CONTRACTOR TO VERIFY LOCATION AND ELEVATION OF UTILITY PRIOR TO EXCAVATION ACTIVITY AND NOTIFY ENGINEER AND N.K.W.D. OF CONFLICTS. (** SEE NOTE)
6. DO NOT DISTURB
7. CONTRACTOR TO SUPPORT UTILITY POLE DURING PIPE INSTALLATION (** SEE NOTE)
8. REMOVE AND REPLACE SIGN (** SEE NOTE)
9. REMOVE AND REPLACE MAILBOX (** SEE NOTE)
10. INSTALL 5/8" METER SETTING PER NKWD STD. DWG. No. 107. INSTALL WATER SERVICE LINE (3/4" TYPE K COPPER) FROM THE PROPOSED WATER MAIN TO THE METER SETTING. MATERIAL WILL BE PROVIDED BY NKWD FOR THIS WORK. UNIT PRICE INCLUDES LABOR, EQUIPMENT, EXCAVATION, BEDDING, BACKFILL, ASPHALT, CONCRETE AND YARD RESTORATION TO INSTALL SERVICE LINE AS SHOWN ON PLANS OR DIRECTED BY NKWD IN ACCORDANCE WITH SPECS & STD. DWGS., COMPLETE.
11. REMOVE & REPLACE STORM STRUCTURE (CB,HW) AS NEEDED FOR WATER MAIN INSTALLATION (** SEE NOTE)
12. DRIVEWAY RESTORATION (SEE DETAILS)
13. TREE TO BE REMOVED

** **NOTE:**

WORK FOR THIS ITEM SHALL BE CONSIDERED INCIDENTAL TO THE OVERALL PROJECT AND NO ADDITIONAL PAYMENT SHALL BE MADE FOR THIS WORK. COST SHALL BE INCLUDED IN THE BID ITEM FOR WATER MAIN.

verdantas
2161 CHAMBER CENTER DRIVE
FORT MITCHELL, KENTUCKY 41017
TEL. (859) 525-0544
WWW.VERDANTAS.COM

NO	REVISION	DATE
.	.	.

ISSUED FOR:	BID
ISSUE DATE:	APRIL 2025
SCALE:	AS SHOWN
DESIGNED BY:	JCOR
DRAWN BY:	JCOR
CHECKED BY:	JSHU

NORTHERN KENTUCKY WATER DISTRICT
SUBDISTRICT 'O'
-KENTON COUNTY -

ALEXANDER ROAD
STA. 10+00 TO STA. 23+00

PROJECT NO.	
231591	
DISCIPLINE	
CIVIL	
SHEET NAME	
C-16	
SHEET	OF
23	28

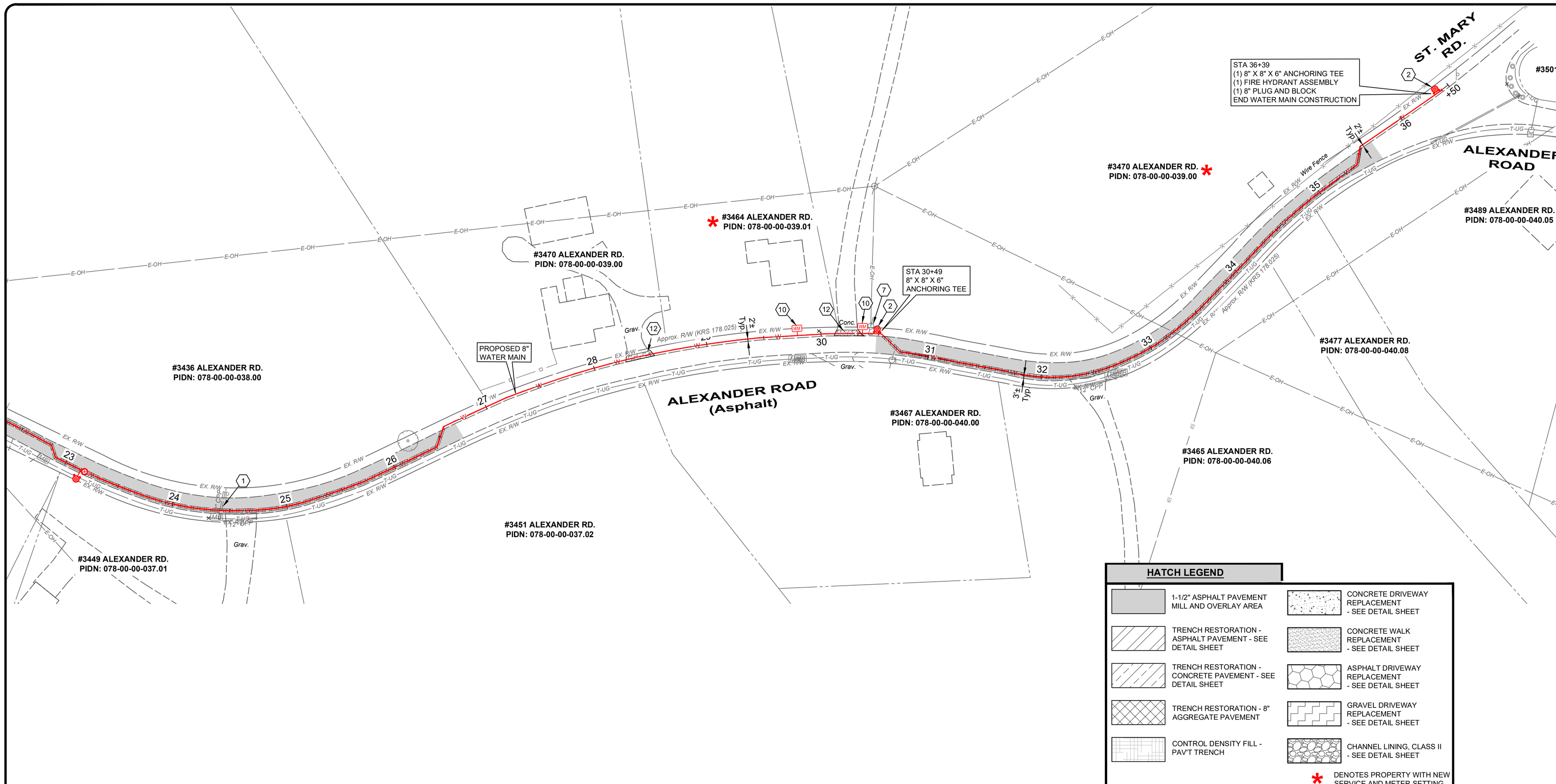

SCALE: 1" = 50'

CONSTRUCTION NOTES

1. MAINTAIN MANAGEABLE VERTICAL CLEARANCE BETWEEN THE PROPOSED WATER MAIN AND THE EXISTING STORM SEWER, WATER MAIN, TELEPHONE DUCTS, AND GAS MAIN. CONSTRUCT ALL SANITARY SEWER CROSSINGS PER N.K.W.D. SPECIFICATIONS ITEM 1.14. MAINTAIN MINIMUM 18" BETWEEN THE PROPOSED WATER MAIN AND THE EXISTING SANITARY SEWER, ACTUAL ELEVATION UNKNOWN. CONTRACTOR TO EXCAVATE & VERIFY ACTUAL LOCATION, SIZE AND ELEVATION OF EXISTING UTILITY PRIOR TO BEGINNING WATER MAIN CONSTRUCTION. THE CONTRACTOR SHALL NOTIFY THE ENGINEER PRIOR TO CONSTRUCTION OF ANY POTENTIAL CONFLICT. NO ADDITIONAL PAYMENT WILL BE MADE FOR THIS WORK AND THE COST SHALL BE INCLUDED IN THE BID ITEM FOR WATER MAIN.
2. PROPOSED FIRE HYDRANT ASSEMBLY, VALVE AND BLOCKING AS PER N.K.W.D. STD. DRAWING NO. 109. COORDINATE LOCATION WITH N.K.W.D. INSPECTOR. ANCHOR VALVE TO TEE.
3. CONNECT TO EXISTING WATER MAIN (ACTUAL ELEVATION UNKNOWN). CONTRACTOR TO VERIFY DEPTH PRIOR TO CONSTRUCTION.
4. CHANNEL LINING, CLASS II (18") w/ NON-WOVEN GEOTEXTILE FILTER FABRIC
5. CONTRACTOR TO VERIFY LOCATION AND ELEVATION OF UTILITY PRIOR TO EXCAVATION ACTIVITY AND NOTIFY ENGINEER AND N.K.W.D. OF CONFLICTS. (** SEE NOTE)
6. DO NOT DISTURB
7. CONTRACTOR TO SUPPORT UTILITY POLE DURING PIPE INSTALLATION (** SEE NOTE)
8. REMOVE AND REPLACE SIGN (** SEE NOTE)
9. REMOVE AND REPLACE MAILBOX (** SEE NOTE)
10. INSTALL 5/8" METER SETTING PER NKWD STD. DWG. No. 107. INSTALL WATER SERVICE LINE (3/4" TYPE K COPPER) FROM THE PROPOSED WATER MAIN TO THE METER SETTING. MATERIAL WILL BE PROVIDED BY NKWD FOR THIS WORK. UNIT PRICE INCLUDES LABOR, EQUIPMENT, EXCAVATION, BEDDING, BACKFILL, ASPHALT, CONCRETE AND YARD RESTORATION TO INSTALL SERVICE LINE AS SHOWN ON PLANS OR DIRECTED BY NKWD IN ACCORDANCE WITH SPECS & STD. DWGS., COMPLETE.
11. REMOVE & REPLACE STORM STRUCTURE (CB,HW) AS NEEDED FOR WATER MAIN INSTALLATION (** SEE NOTE)
12. DRIVEWAY RESTORATION (SEE DETAILS)
13. TREE TO BE REMOVED

** NOTE:

WORK FOR THIS ITEM SHALL BE CONSIDERED INCIDENTAL TO THE OVERALL PROJECT AND NO ADDITIONAL PAYMENT SHALL BE MADE FOR THIS WORK. COST SHALL BE INCLUDED IN THE BID ITEM FOR WATER MAIN.

HATCH LEGEND

- 1-1/2" ASPHALT PAVEMENT MILL AND OVERLAY AREA
- TRENCH RESTORATION - ASPHALT PAVEMENT - SEE DETAIL SHEET
- TRENCH RESTORATION - CONCRETE PAVEMENT - SEE DETAIL SHEET
- TRENCH RESTORATION - 8" AGGREGATE PAVEMENT
- CONTROL DENSITY FILL - PAV'T TRENCH
- CONCRETE DRIVEWAY REPLACEMENT - SEE DETAIL SHEET
- CONCRETE WALK REPLACEMENT - SEE DETAIL SHEET
- ASPHALT DRIVEWAY REPLACEMENT - SEE DETAIL SHEET
- GRAVEL DRIVEWAY REPLACEMENT - SEE DETAIL SHEET
- CHANNEL LINING, CLASS II - SEE DETAIL SHEET
- * DENOTES PROPERTY WITH NEW SERVICE AND METER SETTING

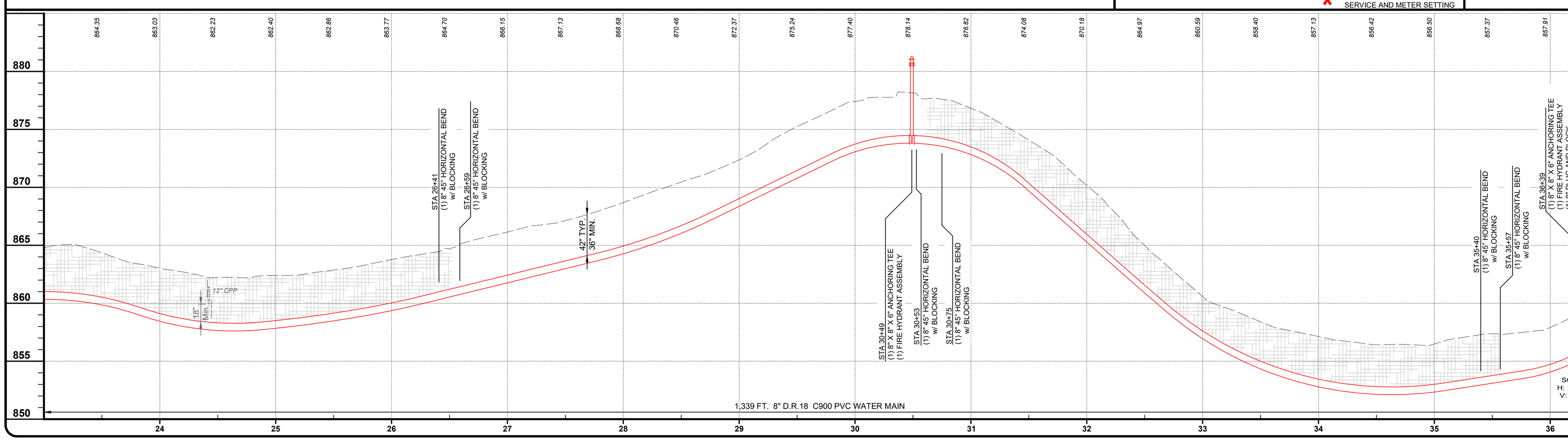

verdantas
2161 CHAMBER CENTER DRIVE
FORT MITCHELL, KENTUCKY 41017
TEL. (859) 525-0544
WWW.VERDANTAS.COM

NO	REVISION	DATE
.	.	.

ISSUED FOR:	BID
ISSUE DATE:	APRIL 2025
SCALE:	AS SHOWN
DESIGNED BY:	JCOR
DRAWN BY:	JCOR
CHECKED BY:	JSHU

NORTHERN KENTUCKY WATER DISTRICT
SUBDISTRICT 'O'
-KENTON COUNTY -

ALEXANDER ROAD
STA. 23+00 TO STA. 36+00

PROJECT NO.	
231591	
DISCIPLINE	
CIVIL	
SHEET NAME	
C-17	
SHEET	OF
24	28

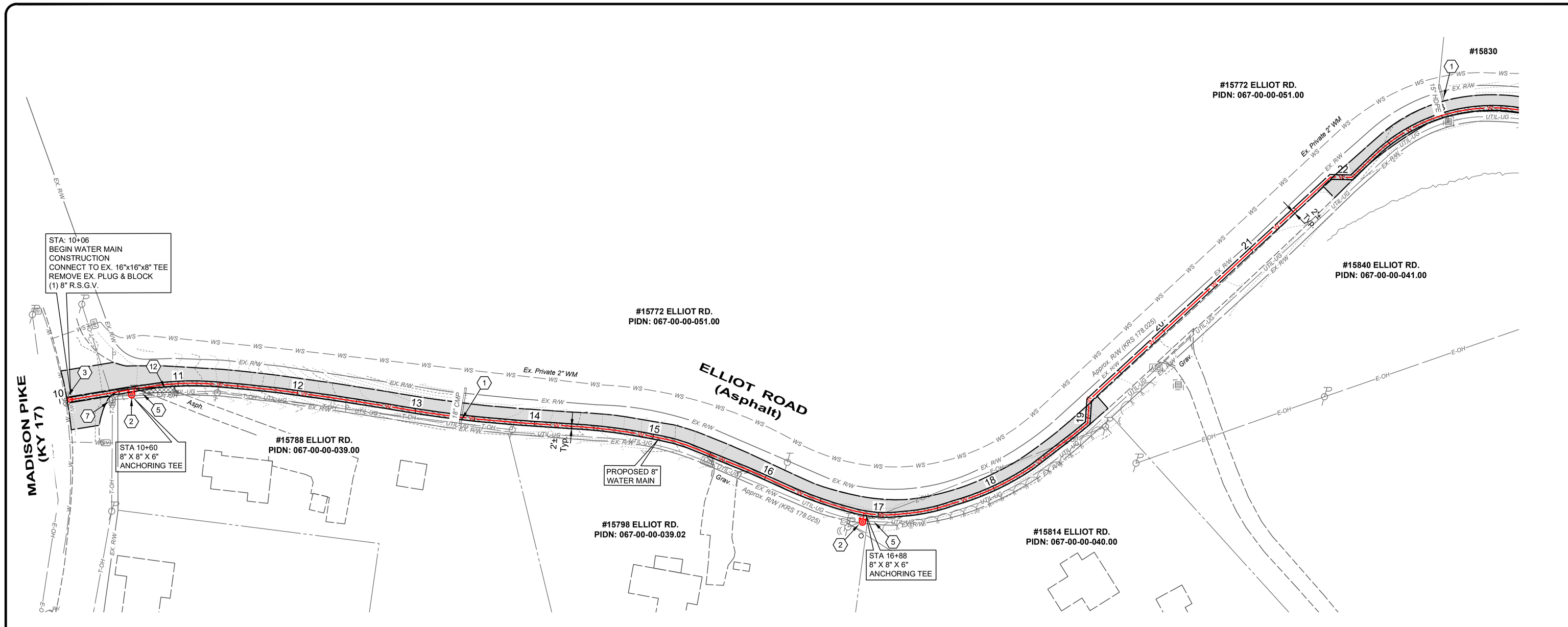

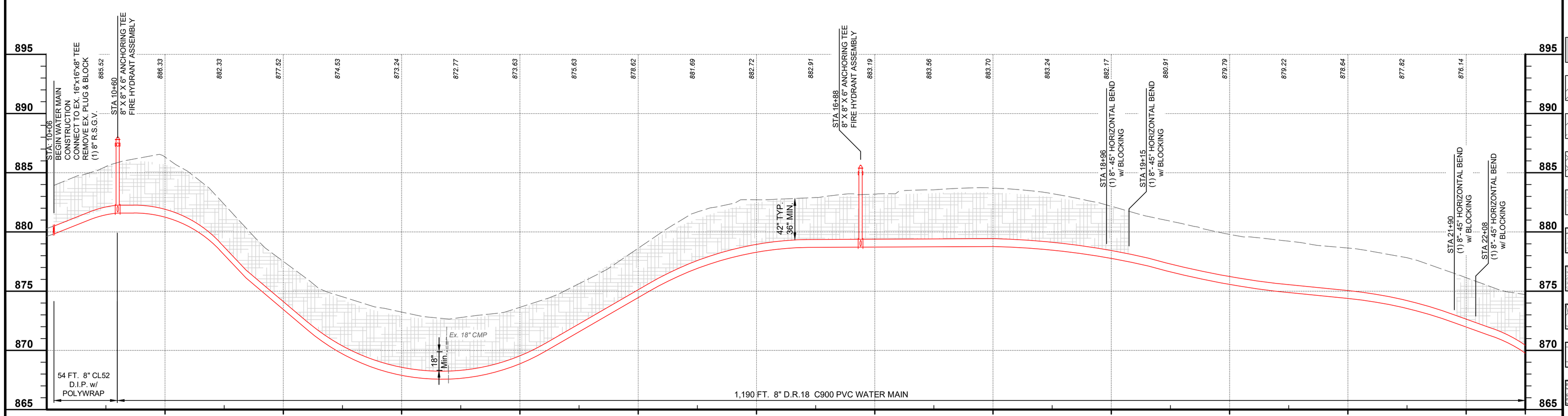

0' 50'' 100'

SCALE: 1" = 50

CONSTRUCTION NOTES

1. MAINTAIN MANAGEABLE VERTICAL CLEARANCE BETWEEN THE PROPOSED WATER MAIN AND THE EXISTING STORM SEWER, WATER MAIN, TELEPHONE DUCTS, AND GAS MAIN. CONSTRUCT ALL SANITARY SEWER CROSSINGS PER N.K.W.D. SPECIFICATIONS ITEM 1.14. MAINTAIN MINIMUM 18" BETWEEN THE PROPOSED WATER MAIN AND THE EXISTING SANITARY SEWER, ACTUAL ELEVATION UNKNOWN. CONTRACTOR TO EXCAVATE & VERIFY ACTUAL LOCATION, SIZE AND ELEVATION OF EXISTING UTILITY PRIOR TO BEGINNING WATER MAIN CONSTRUCTION. THE CONTRACTOR SHALL NOTIFY THE ENGINEER PRIOR TO CONSTRUCTION OF ANY POTENTIAL CONFLICT. NO ADDITIONAL PAYMENT WILL BE MADE FOR THIS WORK AND THE COST SHALL BE INCLUDED IN THE BID ITEM FOR WATER MAIN.
2. PROPOSED FIRE HYDRANT ASSEMBLY, VALVE AND BLOCKING AS PER N.K.W.D. STD. DRAWING NO. 109. COORDINATE LOCATION WITH N.K.W.D. INSPECTOR. ANCHOR VALVE TO TEE.
3. CONNECT TO EXISTING WATER MAIN (ACTUAL ELEVATION UNKNOWN). CONTRACTOR TO VERIFY DEPTH PRIOR TO CONSTRUCTION.
4. CHANNEL LINING, CLASS II (18") w/ NON-WOVEN GEOTEXTILE FILTER FABRIC
5. CONTRACTOR TO VERIFY LOCATION AND ELEVATION OF UTILITY PRIOR TO EXCAVATION ACTIVITY AND NOTIFY ENGINEER AND N.K.W.D. OF CONFLICTS. (** SEE NOTE)
6. DO NOT DISTURB
7. CONTRACTOR TO SUPPORT UTILITY POLE DURING PIPE INSTALLATION (** SEE NOTE)
8. REMOVE AND REPLACE SIGN (** SEE NOTE)
9. REMOVE AND REPLACE MAILBOX (** SEE NOTE)
10. INSTALL 5/8" METER SETTING PER NKWD STD. DWG. No. 107. INSTALL WATER SERVICE LINE (3/4" TYPE K COPPER) FROM THE PROPOSED WATER MAIN TO THE METER SETTING. MATERIAL WILL BE PROVIDED BY NKWD FOR THIS WORK. UNIT PRICE INCLUDES LABOR, EQUIPMENT, EXCAVATION, BEDDING, BACKFILL, ASPHALT, CONCRETE AND YARD RESTORATION TO INSTALL SERVICE LINE AS SHOWN ON PLANS OR DIRECTED BY NKWD IN ACCORDANCE WITH SPECS & STD. DWGS., COMPLETE.
11. REMOVE & REPLACE STORM STRUCTURE (CB,HW) AS NEEDED FOR WATER MAIN INSTALLATION (** SEE NOTE)
12. DRIVEWAY RESTORATION (SEE DETAILS)
13. TREE TO BE REMOVED

**** NOTE:**

WORK FOR THIS ITEM SHALL BE CONSIDERED INCIDENTAL TO THE OVERALL PROJECT AND NO ADDITIONAL PAYMENT SHALL BE MADE FOR THIS WORK. COST SHALL BE INCLUDED IN THE BID ITEM FOR WATER MAIN.

HATCH LEGEND

- 1-1/2" ASPHALT PAVEMENT MILL AND OVERLAY AREA
- TRENCH RESTORATION - ASPHALT PAVEMENT - SEE DETAIL SHEET
- TRENCH RESTORATION - CONCRETE PAVEMENT - SEE DETAIL SHEET
- TRENCH RESTORATION - 8" AGGREGATE PAVEMENT
- CONTROL DENSITY FILL - PAV'T TRENCH
- CONCRETE DRIVEWAY REPLACEMENT - SEE DETAIL SHEET
- CONCRETE WALK REPLACEMENT - SEE DETAIL SHEET
- ASPHALT DRIVEWAY REPLACEMENT - SEE DETAIL SHEET
- GRAVEL DRIVEWAY REPLACEMENT - SEE DETAIL SHEET
- CHANNEL LINING, CLASS II - SEE DETAIL SHEET
- * DENOTES PROPERTY WITH NEW SERVICE AND METER SETTING

verdantas
2161 CHAMBER CENTER DRIVE
FORT MITCHELL, KENTUCKY 41017
TEL. (859) 525-0544
WWW.VERDANTAS.COM

NO	REVISION	DATE
-	-	-

ISSUED FOR:	BID
ISSUE DATE:	APRIL 2025
SCALE:	AS SHOWN
DESIGNED BY:	JCOR
DRAWN BY:	JCOR
CHECKED BY:	JSHU

NORTHERN KENTUCKY WATER DISTRICT
SUBDISTRICT 'O'
-KENTON COUNTY -

ELLIOT ROAD
STA. 10+00 TO STA. 22+50

PROJECT NO.	
231591	
DISCIPLINE	
CIVIL	
SHEET NAME	
C-18	
SHEET	OF
25	28

H:\2023\231591\DWG\SHEETS\C_231591 PNP_16_ELLIOT.DWG - ELLIOT-1 - 4/18/2025 2:35:39 PM - JAMES CORNELL

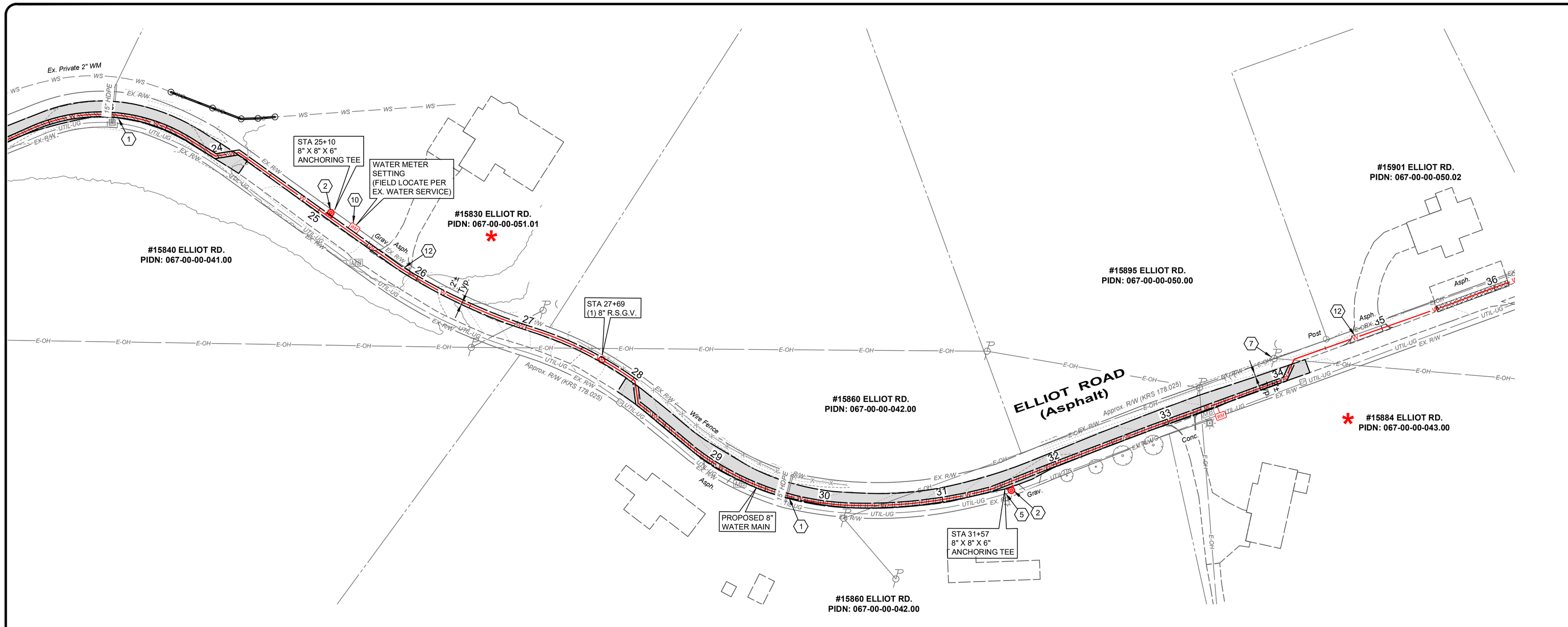

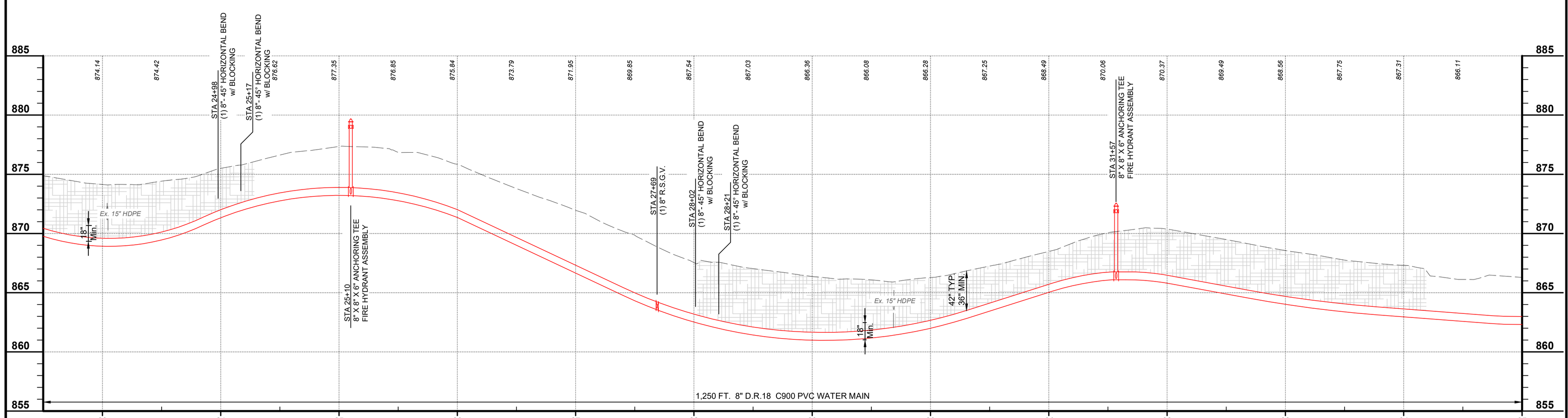

0' 50'' 100'
SCALE: 1" = 50

CONSTRUCTION NOTES

1. MAINTAIN MANAGEABLE VERTICAL CLEARANCE BETWEEN THE PROPOSED WATER MAIN AND THE EXISTING STORM SEWER, WATER MAIN, TELEPHONE DUCTS, AND GAS MAIN. CONSTRUCT ALL SANITARY SEWER CROSSINGS PER N.K.W.D. SPECIFICATIONS ITEM 1.14. MAINTAIN MINIMUM 18" BETWEEN THE PROPOSED WATER MAIN AND THE EXISTING SANITARY SEWER, ACTUAL ELEVATION UNKNOWN. CONTRACTOR TO EXCAVATE & VERIFY ACTUAL LOCATION, SIZE AND ELEVATION OF EXISTING UTILITY PRIOR TO BEGINNING WATER MAIN CONSTRUCTION. THE CONTRACTOR SHALL NOTIFY THE ENGINEER PRIOR TO CONSTRUCTION OF ANY POTENTIAL CONFLICT. NO ADDITIONAL PAYMENT WILL BE MADE FOR THIS WORK AND THE COST SHALL BE INCLUDED IN THE BID ITEM FOR WATER MAIN.
2. PROPOSED FIRE HYDRANT ASSEMBLY, VALVE AND BLOCKING AS PER N.K.W.D. STD. DRAWING NO. 109. COORDINATE LOCATION WITH N.K.W.D. INSPECTOR. ANCHOR VALVE TO TEE.
3. CONNECT TO EXISTING WATER MAIN (ACTUAL ELEVATION UNKNOWN). CONTRACTOR TO VERIFY DEPTH PRIOR TO CONSTRUCTION.
4. CHANNEL LINING, CLASS II (18") w/ NON-WOVEN GEOTEXTILE FILTER FABRIC
5. CONTRACTOR TO VERIFY LOCATION AND ELEVATION OF UTILITY PRIOR TO EXCAVATION ACTIVITY AND NOTIFY ENGINEER AND N.K.W.D. OF CONFLICTS. (** SEE NOTE)
6. DO NOT DISTURB
7. CONTRACTOR TO SUPPORT UTILITY POLE DURING PIPE INSTALLATION (** SEE NOTE)
8. REMOVE AND REPLACE SIGN (** SEE NOTE)
9. REMOVE AND REPLACE MAILBOX (** SEE NOTE)
10. INSTALL 5/8" METER SETTING PER NKWD STD. DWG. No. 107. INSTALL WATER SERVICE LINE (3/4" TYPE K COPPER) FROM THE PROPOSED WATER MAIN TO THE METER SETTING. MATERIAL WILL BE PROVIDED BY NKWD FOR THIS WORK. UNIT PRICE INCLUDES LABOR, EQUIPMENT, EXCAVATION, BEDDING, BACKFILL, ASPHALT, CONCRETE AND YARD RESTORATION TO INSTALL SERVICE LINE AS SHOWN ON PLANS OR DIRECTED BY NKWD IN ACCORDANCE WITH SPECS & STD. DWGS., COMPLETE.
11. REMOVE & REPLACE STORM STRUCTURE (CB,HW) AS NEEDED FOR WATER MAIN INSTALLATION (** SEE NOTE)
12. DRIVEWAY RESTORATION (SEE DETAILS)
13. TREE TO BE REMOVED

** **NOTE:**

WORK FOR THIS ITEM SHALL BE CONSIDERED INCIDENTAL TO THE OVERALL PROJECT AND NO ADDITIONAL PAYMENT SHALL BE MADE FOR THIS WORK. COST SHALL BE INCLUDED IN THE BID ITEM FOR WATER MAIN.

HATCH LEGEND

- 1-1/2" ASPHALT PAVEMENT MILL AND OVERLAY AREA
- TRENCH RESTORATION - ASPHALT PAVEMENT - SEE DETAIL SHEET
- TRENCH RESTORATION - CONCRETE PAVEMENT - SEE DETAIL SHEET
- TRENCH RESTORATION - 8" AGGREGATE PAVEMENT
- CONTROL DENSITY FILL - PAV'T TRENCH
- CONCRETE DRIVEWAY REPLACEMENT - SEE DETAIL SHEET
- CONCRETE WALK REPLACEMENT - SEE DETAIL SHEET
- ASPHALT DRIVEWAY REPLACEMENT - SEE DETAIL SHEET
- GRAVEL DRIVEWAY REPLACEMENT - SEE DETAIL SHEET
- CHANNEL LINING, CLASS II - SEE DETAIL SHEET
- * DENOTES PROPERTY WITH NEW SERVICE AND METER SETTING

verdantas
2161 CHAMBER CENTER DRIVE
FORT MITCHELL, KENTUCKY 41017
TEL. (859) 525-0544
WWW.VERDANTAS.COM

NO	REVISION	DATE
-	-	-

ISSUED FOR:	BID
ISSUE DATE:	APRIL 2025
SCALE:	AS SHOWN
DESIGNED BY:	JCOR
DRAWN BY:	JCOR
CHECKED BY:	JSHU

NORTHERN KENTUCKY WATER DISTRICT
SUBDISTRICT 'O'
-KENTON COUNTY -

ELLIOT ROAD
STA. 22+50 TO STA. 35+00

PROJECT NO. 231591
DISCIPLINE: CIVIL
SHEET NAME: C-19
SHEET 26 OF 28

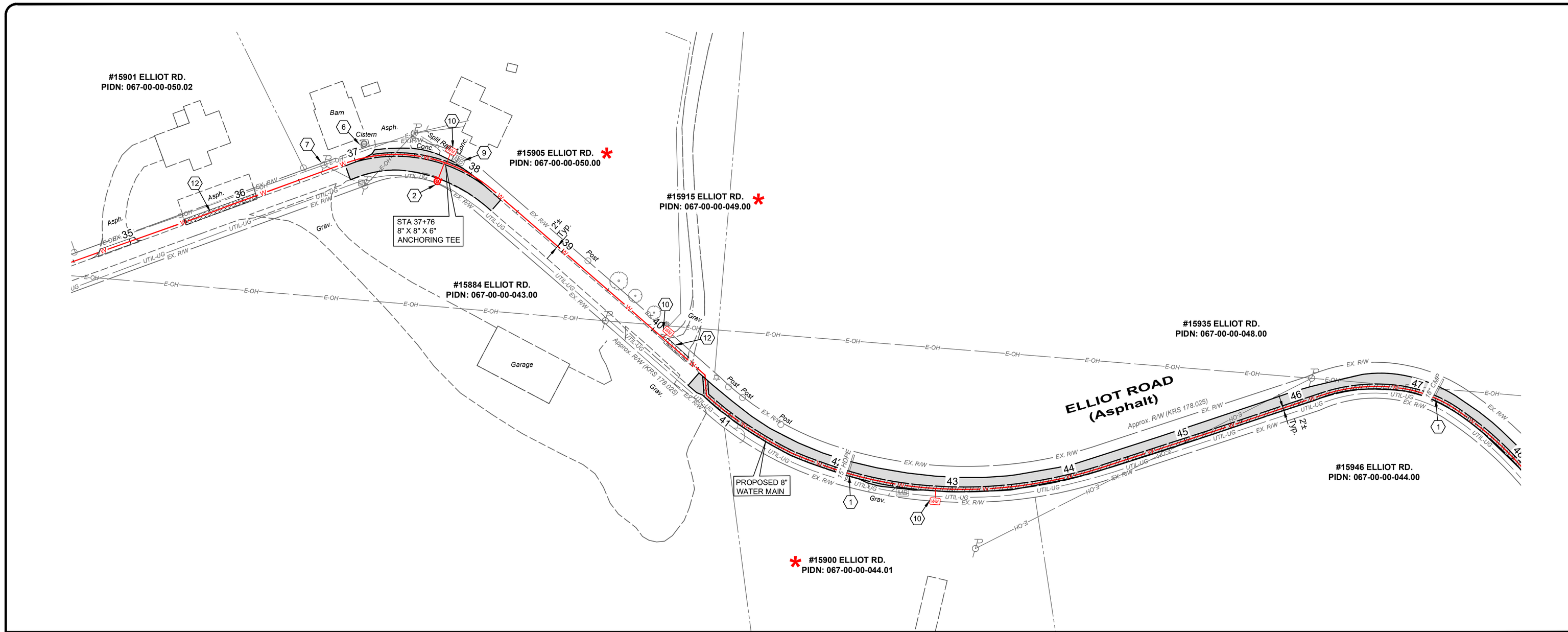

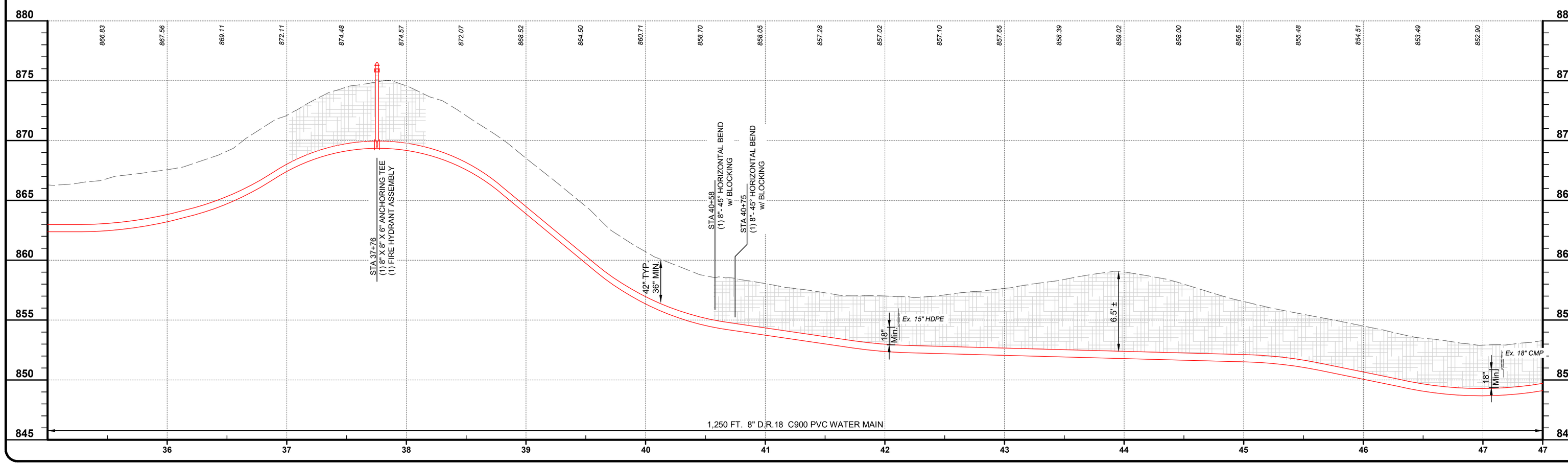

0' 50'' 100'

SCALE: 1" = 50

CONSTRUCTION NOTES

1. MAINTAIN MANAGEABLE VERTICAL CLEARANCE BETWEEN THE PROPOSED WATER MAIN AND THE EXISTING STORM SEWER, WATER MAIN, TELEPHONE DUCTS, AND GAS MAIN. CONSTRUCT ALL SANITARY SEWER CROSSINGS PER N.K.W.D. SPECIFICATIONS ITEM 1.14. MAINTAIN MINIMUM 18" BETWEEN THE PROPOSED WATER MAIN AND THE EXISTING SANITARY SEWER, ACTUAL ELEVATION UNKNOWN. CONTRACTOR TO EXCAVATE & VERIFY ACTUAL LOCATION, SIZE AND ELEVATION OF EXISTING UTILITY PRIOR TO BEGINNING WATER MAIN CONSTRUCTION. THE CONTRACTOR SHALL NOTIFY THE ENGINEER PRIOR TO CONSTRUCTION OF ANY POTENTIAL CONFLICT. NO ADDITIONAL PAYMENT WILL BE MADE FOR THIS WORK AND THE COST SHALL BE INCLUDED IN THE BID ITEM FOR WATER MAIN.
2. PROPOSED FIRE HYDRANT ASSEMBLY, VALVE AND BLOCKING AS PER N.K.W.D. STD. DRAWING NO. 109. COORDINATE LOCATION WITH N.K.W.D. INSPECTOR. ANCHOR VALVE TO TEE.
3. CONNECT TO EXISTING WATER MAIN (ACTUAL ELEVATION UNKNOWN). CONTRACTOR TO VERIFY DEPTH PRIOR TO CONSTRUCTION.
4. CHANNEL LINING, CLASS II (18") w/ NON-WOVEN GEOTEXTILE FILTER FABRIC
5. CONTRACTOR TO VERIFY LOCATION AND ELEVATION OF UTILITY PRIOR TO EXCAVATION ACTIVITY AND NOTIFY ENGINEER AND N.K.W.D. OF CONFLICTS. (** SEE NOTE)
6. DO NOT DISTURB
7. CONTRACTOR TO SUPPORT UTILITY POLE DURING PIPE INSTALLATION (** SEE NOTE)
8. REMOVE AND REPLACE SIGN (** SEE NOTE)
9. REMOVE AND REPLACE MAILBOX (** SEE NOTE)
10. INSTALL 5/8" METER SETTING PER NKWD STD. DWG. No. 107. INSTALL WATER SERVICE LINE (3/4" TYPE K COPPER) FROM THE PROPOSED WATER MAIN TO THE METER SETTING. MATERIAL WILL BE PROVIDED BY NKWD FOR THIS WORK. UNIT PRICE INCLUDES LABOR, EQUIPMENT, EXCAVATION, BEDDING, BACKFILL, ASPHALT, CONCRETE AND YARD RESTORATION TO INSTALL SERVICE LINE AS SHOWN ON PLANS OR DIRECTED BY NKWD IN ACCORDANCE WITH SPECS & STD. DWGS., COMPLETE.
11. REMOVE & REPLACE STORM STRUCTURE (CB,HW) AS NEEDED FOR WATER MAIN INSTALLATION (** SEE NOTE)
12. DRIVEWAY RESTORATION (SEE DETAILS)
13. TREE TO BE REMOVED

** **NOTE:**

WORK FOR THIS ITEM SHALL BE CONSIDERED INCIDENTAL TO THE OVERALL PROJECT AND NO ADDITIONAL PAYMENT SHALL BE MADE FOR THIS WORK. COST SHALL BE INCLUDED IN THE BID ITEM FOR WATER MAIN.

HATCH LEGEND

- 1-1/2" ASPHALT PAVEMENT MILL AND OVERLAY AREA
- TRENCH RESTORATION - ASPHALT PAVEMENT - SEE DETAIL SHEET
- TRENCH RESTORATION - CONCRETE PAVEMENT - SEE DETAIL SHEET
- TRENCH RESTORATION - 8" AGGREGATE PAVEMENT
- CONTROL DENSITY FILL - PAV'T TRENCH
- CONCRETE DRIVEWAY REPLACEMENT - SEE DETAIL SHEET
- CONCRETE WALK REPLACEMENT - SEE DETAIL SHEET
- ASPHALT DRIVEWAY REPLACEMENT - SEE DETAIL SHEET
- GRAVEL DRIVEWAY REPLACEMENT - SEE DETAIL SHEET
- CHANNEL LINING, CLASS II - SEE DETAIL SHEET
- * DENOTES PROPERTY WITH NEW SERVICE AND METER SETTING

verdantas
2161 CHAMBER CENTER DRIVE
FORT MITCHELL, KENTUCKY 41017
TEL. (859) 525-0544
WWW.VERDANTAS.COM

NO	REVISION	DATE
-	-	-

ISSUED FOR:	BID
ISSUE DATE:	APRIL 2025
SCALE:	AS SHOWN
DESIGNED BY:	JCOR
DRAWN BY:	JCOR
CHECKED BY:	JSHU

NORTHERN KENTUCKY WATER DISTRICT
SUBDISTRICT 'O'
-KENTON COUNTY -

ELLIOT ROAD
STA. 35+00 TO STA. 47+50

PROJECT NO. 231591

DISCIPLINE: CIVIL

SHEET NAME: C-20

SHEET 27 OF 28

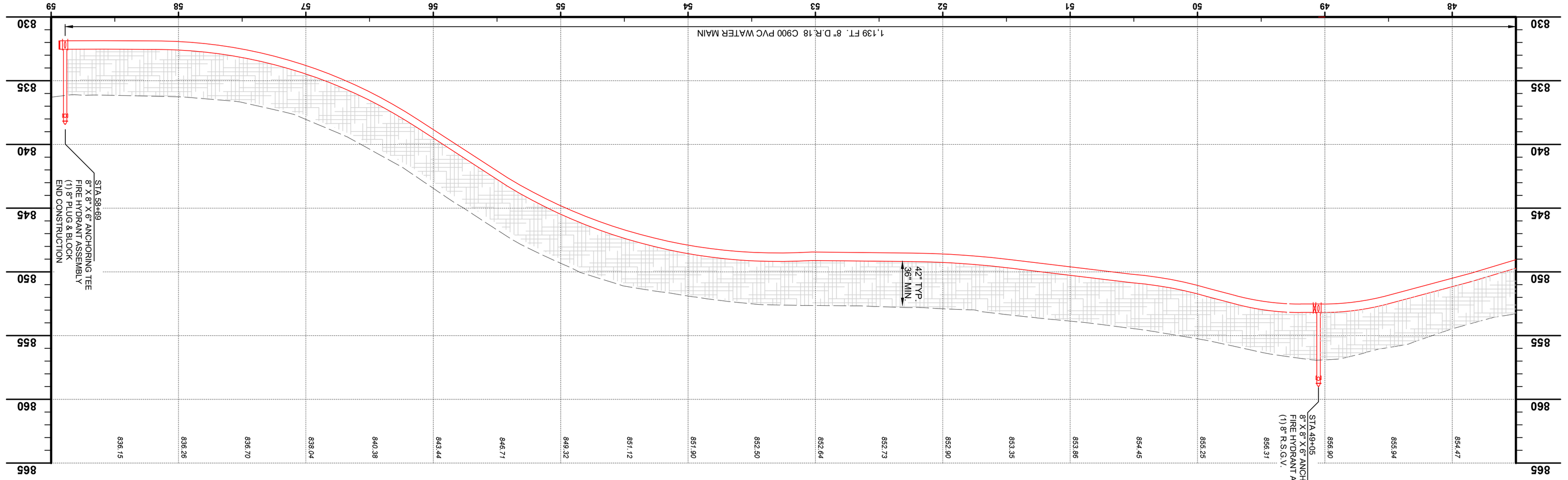

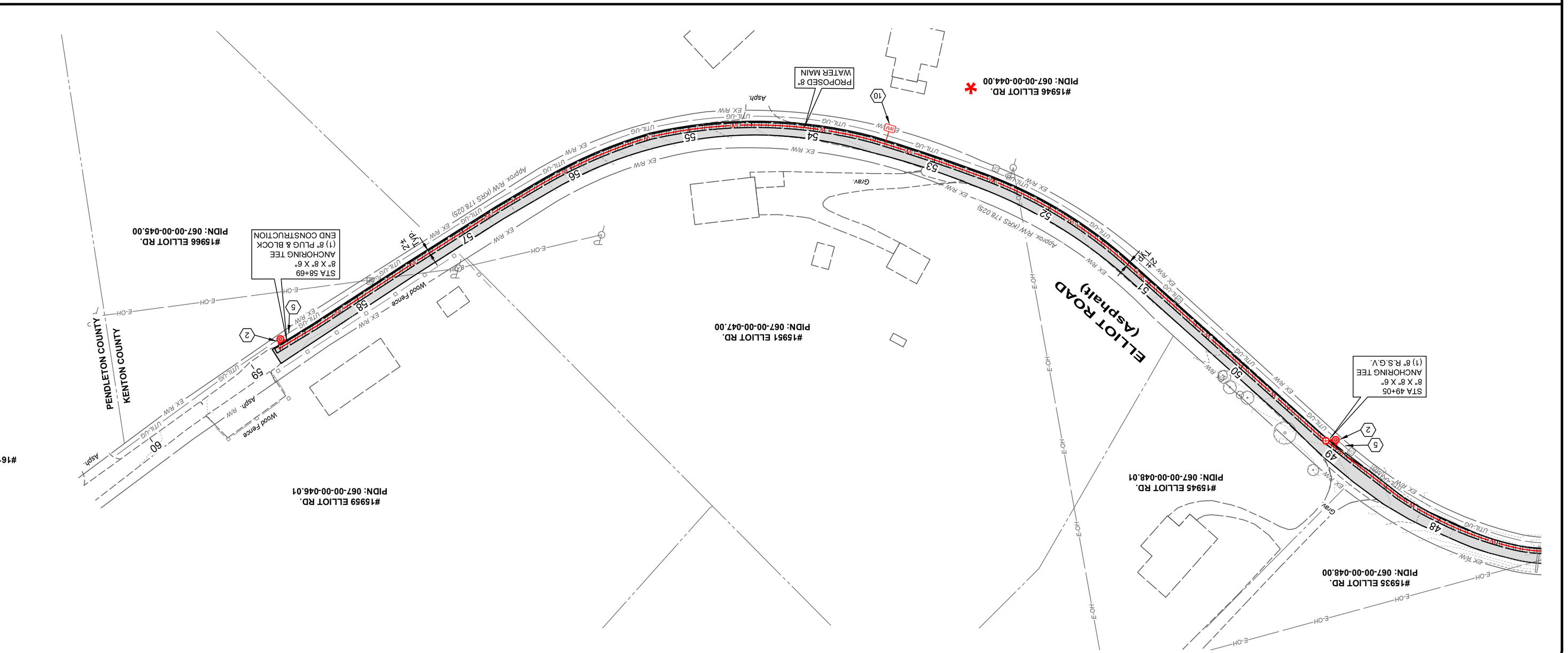

CONSTRUCTION NOTES

1. MAINTAIN MANAGEABLE VERTICAL CLEARANCE BETWEEN THE PROPOSED WATER MAIN AND THE EXISTING STORM SEWER, WATER MAIN, TELEPHONE DUCTS, AND GAS MAIN. CONSTRUCT ALL SANITARY SEWER CROSSINGS PER N.K.W.D. SPECIFICATIONS ITEM 1.14. MAINTAIN MINIMUM 18" BETWEEN THE PROPOSED WATER MAIN AND THE EXISTING SANITARY SEWER. ACTUAL ELEVATION UNKNOWN. CONTRACTOR TO EXCAVATE & VERIFY ACTUAL LOCATION, SIZE AND ELEVATION OF EXISTING UTILITY PRIOR TO BEGINNING WATER MAIN CONSTRUCTION. THE CONTRACTOR SHALL NOTIFY THE ENGINEER PRIOR TO CONSTRUCTION OF ANY POTENTIAL CONFLICT. NO ADDITIONAL PAYMENT WILL BE MADE FOR THIS WORK AND THE COST SHALL BE INCLUDED IN THE BID ITEM FOR WATER MAIN.
2. PROPOSED FIRE HYDRANT ASSEMBLY, VALVE AND BLOCKING AS PER N.K.W.D. STD. DRAWING NO. 109. COORDINATE LOCATION WITH N.K.W.D. INSPECTOR. ANCHOR VALVE TO TEE.
3. CONNECT TO EXISTING WATER MAIN (ACTUAL ELEVATION UNKNOWN). CONTRACTOR TO VERIFY DEPTH PRIOR TO CONSTRUCTION.
4. CHANNEL LINING, CLASS II (18") w/ NON-WOVEN GEOTEXTILE FILTER FABRIC
5. CONTRACTOR TO VERIFY LOCATION AND ELEVATION OF UTILITY PRIOR TO EXCAVATION ACTIVITY AND NOTIFY ENGINEER AND N.K.W.D. OF CONFLICTS. (** SEE NOTE)
6. DO NOT DISTURB
7. CONTRACTOR TO SUPPORT UTILITY POLE DURING PIPE INSTALLATION (** SEE NOTE).
8. REMOVE AND REPLACE SIGN (** SEE NOTE)
9. REMOVE AND REPLACE MAILBOX (** SEE NOTE)
10. INSTALL 5/8" METER SETTING PER NKWD STD. DWG. No. 107. INSTALL WATER SERVICE LINE (3/4" TYPE K COPPER) FROM THE PROPOSED WATER MAIN TO THE METER SETTING. MATERIAL WILL BE PROVIDED BY NKWD FOR THIS WORK. UNIT PRICE INCLUDES LABOR, EQUIPMENT, EXCAVATION, BEDDING, BACKFILL, ASPHALT, CONCRETE AND YARD RESTORATION TO INSTALL SERVICE LINE AS SHOWN ON PLANS OR DIRECTED BY NKWD IN ACCORDANCE WITH SPECS & STD. DWGS., COMPLETE.
11. REMOVE & REPLACE STORM STRUCTURE (CB,HW) AS NEEDED FOR WATER MAIN INSTALLATION (** SEE NOTE)
12. DRIVEWAY RESTORATION (SEE DETAILS)
13. TREE TO BE REMOVED

** NOTE:
WORK FOR THIS ITEM SHALL BE CONSIDERED INCIDENTAL TO THE OVERALL PROJECT AND NO ADDITIONAL PAYMENT SHALL BE MADE FOR THIS WORK COST SHALL BE INCLUDED IN THE BID ITEM FOR WATER MAIN.

HATCH LEGEND

- 1-1/2" ASPHALT PAVEMENT MILL AND OVERLAY AREA
- TRENCH RESTORATION - ASPHALT PAVEMENT - SEE DETAIL SHEET
- TRENCH RESTORATION - CONCRETE PAVEMENT - SEE DETAIL SHEET
- TRENCH RESTORATION - 8" AGGREGATE PAVEMENT
- CONTROL DENSITY FILL - PAVT TRENCH
- CONCRETE DRIVEWAY REPLACEMENT - SEE DETAIL SHEET
- CONCRETE WALK REPLACEMENT - SEE DETAIL SHEET
- ASPHALT DRIVEWAY REPLACEMENT - SEE DETAIL SHEET
- GRAVEL DRIVEWAY REPLACEMENT - SEE DETAIL SHEET
- CHANNEL LINING, CLASS II - SEE DETAIL SHEET
- * DENOTES PROPERTY WITH NEW SERVICE AND METER SETTING

SCALE: 1" = 50'
0' 50' 100'

NORTHERN KENTUCKY WATER DISTRICT
SUBDISTRICT 'O'
-KENTON COUNTY -

ELLIOT ROAD
STA. 47+50 TO STA. 58+69

PROJECT NO.	DISCIPLINE	SHEET NAME	SHEET	OF
231591	CIVIL	C-21	28	28

ISSUED FOR:	BID
ISSUE DATE:	APRIL 2025
SCALE:	AS SHOWN
DESIGNED BY:	JCOR
DRAWN BY:	JCOR
CHECKED BY:	JSHU

NO	REVISION	DATE
.	.	.

verdantas
2161 CHAMBER CENTER DRIVE
FORT MITCHELL, KENTUCKY 41017
TEL. (859) 525-0544
WWW.VERDANTAS.COM

H:\2023\231591\DWG\SHEETS\C_231591 PNP^_H_ELLIOT.DWG - ELLIOT-4 - 4/18/2025 2:39:39 PM - JAMES COMMELL