COMMONWEALTH OF KENTUCKY
BEFORE THE PUBLIC SERVICE COMMISSION

In the Matter of:

THE APPLICATION OF CELLCO PARTNERSHIP D/B/A VERIZON WIRELESS AND TOWERCOM VI-B, LLC FOR ISSUANCE OF A CERTIFICATE OF PUBLIC CONVENIENCE AND NECESSITY TO CONSTRUCT A WIRELESS COMMUNICATIONS FACILITY IN THE COMMONWEALTH OF KENTUCKY IN THE COUNTY OF CLINTON	)))))))	CASE NO. 2025-00032

SITE NAME: AGEE RIDGE

* * * * * * *

APPLICATION FOR
CERTIFICATE OF PUBLIC CONVENIENCE AND NECESSITY
FOR CONSTRUCTION OF A WIRELESS COMMUNICATIONS FACILITY

Cellco Partnership, d/b/a Verizon Wireless and TowerCom VI-B, LLC ("Co-Applicants"), by counsel, pursuant to (i) KRS §§278.020, 278.040, 278.650, 278.665, and other statutory authority, and the rules and regulations applicable thereto, and (ii) the Telecommunications Act of 1996, respectfully submit this Application requesting issuance of a Certificate of Public Convenience and Necessity ("CPCN") from the Kentucky Public Service Commission ("PSC") to construct, maintain, and operate a Wireless Communications Facility ("WCF") to serve the customers of the Co-Applicant with wireless communications services.

In support of this Application, Co-Applicants respectfully provide and state the following information:

1. The complete name and address of the Co-Applicants:

    a. Cellco Partnership, d/b/a Verizon Wireless, having a local address of 2902 Ring Road, Elizabethtown, KY, 42701.

b. TowerCom VI-B, LLC, having a local address of 241 Atlantic Blvd., Ste. 201, Neptune Beach, FL 32266

2. Co-Applicants:

a. Cellco Partnership, d/b/a Verizon Wireless is a Delaware general partnership and a copy of the Statement of Good Standing from Delaware, and the Certificate of Assumed Name is on file with the Secretary of State of the Commonwealth of Kentucky and included as part of **Exhibit A**.

b. TowerCom VI-B, LLC is a Delaware limited liability company and copies of the formulation documents and Statement of Good Standing from Delaware, and the Certificate of Authorization is on file with the Secretary of State of the Commonwealth of Kentucky, are included as part of **Exhibit A**.

3. Co-Applicants propose construction of an antenna tower for communications services, which is to be located in an area outside the jurisdiction of a planning commission, and Co-Applicants submit this application to the PSC for a certificate of public convenience and necessity pursuant to KRS §§ 278.020(1), 278.040, 278.650, 278.665, and other statutory authority.

4. The Co-Applicant operates on frequencies licensed by the Federal Communications Commission ("FCC") pursuant to applicable FCC requirements. A copy of the Co-Applicants' FCC Registration and Licenses with Authorization to provide wireless services are attached to this Application or described as part of **Exhibit B**, and the facility will be constructed and operated in accordance with applicable FCC regulations.

5. The public convenience and necessity require the construction of the proposed WCF. The construction of the WCF will bring or improve the Co-Applicant's services to an area

currently not served or not adequately served by the Co-Applicants by increasing coverage or capacity and thereby enhancing the public's access to innovative and competitive wireless communications services. A statement from Co-Applicant's RF Design Engineer outlining said need is attached as **Exhibit Q** along with Propagation Maps attached as **Exhibit R**. The WCF is an integral link in the Applicant's network design that must be in place to provide adequate coverage to the service area.

6. To address the above-described service needs, Co-Applicants propose to construct a WCF located on the north side of Highway 127, approximately .9 mile east of Crow Creek Road / KY-3063, Albany, KY 42602, (North Latitude: (36° 50' 43.3", West Longitude 85° 11' 00.7"), on a parcel of land located entirely within the county referenced in the caption of this application. The property on which the WCF will be located is owned by Jerry Lynn and Frances Lowhorn pursuant to a Deed recorded in Deed Book 90, Page 605 in the office of the County Clerk. The proposed WCF will consist of a 255-foot tall tower, with an approximately 5-foot tall lightning arrestor attached at the top, for a total height of 260-feet. The WCF will also include concrete foundations and a shelter or cabinets to accommodate the placement of the Co-Applicant's radio electronics equipment and appurtenant equipment. The Co-Applicant's equipment cabinet or shelter will be approved for use in the Commonwealth of Kentucky by the relevant building inspector. The WCF compound will be fenced and all access gate(s) will be secured. A description of the manner in which the proposed WCF will be constructed is attached as **Exhibit C** and **Exhibit D**.

7. A list of utilities, corporations, or persons with whom the proposed WCF is likely to compete along with a map showing the proposed location as well as the identified like facilities is attached as **Exhibit E**.

8. The site development plan and a vertical profile sketch of the WCF signed and sealed by a professional engineer registered in Kentucky depicting the tower height, as well as a proposed configuration for the antennas of the Co-Applicant has also been included as part of **Exhibit C**.

9. Foundation design plans signed and sealed by a professional engineer registered in Kentucky and a description of the standards according to which the tower was designed are included as part of **Exhibit D**.

10. Co-Applicants have considered the likely effects of the installation of the proposed WCF on nearby land uses and values and has concluded that there is no more suitable location reasonably available from which adequate services can be provided, and that there are no reasonably available opportunities to co-locate Co-Applicant's antennas on an existing structure. When suitable towers or structures exist, Co-Applicant attempts to co-locate on existing structures such as communications towers or other structures capable of supporting Co-Applicant's facilities; however, no other suitable or available co-location site was found to be located in the vicinity of the site. A statement from Co-Applicant, Cellco Partnership, d/b/a Verizon Wireless's RF Design Engineer outlining exploration of co-location opportunities is attached as **Exhibit Q**.

11. A copy of the Application for Federal Aviation Administration's ("FAA") and the FAA Determination of No Hazard (DNH) are attached as **Exhibit F**.

12. A copy of the documentation of application submission to the Kentucky Airport Zoning Commission ("KAZC") is attached as **Exhibit G**. The KAZC Approval will be provided as soon as received.

13. A geotechnical engineering report was performed at the WCF site by Engineered Delta Oaks Group 4904 Professional Court, Second Floor, Raleigh, NC, 27609, dated April 23,

2024 and is attached as **Exhibit H**. The name and address of the geotechnical engineering firm and the professional engineer registered in Kentucky who prepared the report are included as part of **Exhibit H and Exhibit S**.

14. Clear directions to the proposed WCF site from the County seat are attached as **Exhibit I**. The name and telephone number of the preparer of **Exhibit I** are included as part of this exhibit.

15. Applicant, pursuant to a written agreement, has acquired the right to use the WCF site and associated property rights. A copy of the agreement or an abbreviated agreement recorded with the County Clerk is attached as **Exhibit J**.

16. Personnel directly responsible for the design and construction of the proposed WCF are well qualified and experienced. The tower and foundation drawings for the proposed tower submitted as part of **Exhibit D** bear the signature and stamp of a professional engineer registered in the Commonwealth of Kentucky. All tower designs meet or exceed the minimum requirements of applicable laws and regulations. The identity and qualifications of each person directly responsible for design and construction of the proposed tower are contained in **Exhibit S**.

17. The Construction Manager for the proposed facility is Jinay Vascocu and the identity and qualifications of each person directly responsible for design and construction of the proposed tower are contained in **Exhibit S**.

18. As noted on the Survey attached as part of **Exhibit C**, the surveyor has determined that the tower site and access easement are not within any flood hazard area per Flood Hazard Boundary Map, Community Panel Number 21053C0035C, Dated July 22, 2010.

19. **Exhibit C** includes a map drawn to an appropriate scale that shows the location of

the proposed tower and identifies every owner of real estate within 500 feet of the proposed tower, every owner of real estate within 200 feet of the access road including intersection with the public street system and all abutting property owners (according to the records maintained by the County Property Valuation Administrator). Attached as **Exhibit K** is the Notification List with screen shots of the PVA records verified and updated using the Clinton County PVA on February 6, 2025. **Exhibit C** also identifies every structure and every easement within 500 feet of the proposed tower or within 200 feet of the access road including intersection with the public street system.

20. Co-Applicants have sent certified notices to every person who, according to the records of the County Property Valuation Administrator, owns property which is within 500 feet of the proposed tower or contiguous to the site property, by certified mail, return receipt requested, of the proposed construction. Each notified property owner has been provided with a map of the location of the proposed construction, the PSC docket number for this application, the address of the PSC, and informed of his or her right to request intervention. A copy of the form of the notice sent by certified mail to each landowner on February 6, 2025, is attached as **Exhibit L-1**. Twelve (12) notices were sent to surrounding property owners; to date nine (9) notice green cards have been returned. USPS tracking indicated that two (2) notices were noted as "delivery attempt" on February 10, 2025 with notice left to reschedule delivery; one (1) notice is noted as "moved, left no forwarding address" and "moving though network". On February 21, 2025, new notice was sent to the three owners, whose February 6th notices have been identified "as working through the system" and "delivery attempt". USPS now shows two (2) of the notices as delivered and one (1) as "refused" and being returned to sender. A copy of the form of the 2nd notice is attached as **Exhibit L-2**. Copies of the mailed envelopes, returned green cards and USPS tracking are included in **Exhibit L-1 and Exhibit L-2**. We will update this information as received.

21. Co-Applicants have notified the applicable County Judge/Executive by certified mail, return receipt requested, of the proposed construction. This notice included the PSC docket number under which the application will be processed and informed the County Judge/Executive of his/her right to request intervention. A copy of this notice along with a copy of the mailed envelope and returned green card is attached as **Exhibit M**.

22. Notice signs meeting the requirements prescribed by 807 KAR 5:063, Section 1(2) that measure at least 2 feet in height and 4 feet in width and that contain all required language in letters of required height, have been posted, one in a visible location on the proposed site and one on the nearest public road. Such signs shall remain posted for at least two weeks after filing of the Application, and a copy of the posted text is attached as **Exhibit N**.

23. A legal notice advertisement regarding the location of the proposed facility has been published in a newspaper of general circulation in the county in which the WCF is proposed to be located. A copy of the newspaper legal notice advertisement is attached as **Exhibit O**.

24. The area of the proposed facility is in the unincorporated area of Clinton County, Kentucky. The site is located on the north side of Highway 127, approximately .9 mile east of Crow Creek Road / KY-3063, Albany, KY 42602. The area is surrounded by treed area. The area is largely wooded with scatted single-family homes. The terrain is hilly. There is no zoning or Plan Commission in this area of Clinton County. The proposed facility is removed a significant distance from any residential structures. The nearest residential structure is 604 feet from the proposed tower site.

25. The process that was used by the Co-Applicant's radio frequency engineers in selecting the site for the proposed WCF was consistent with the general process used for selecting all other existing and proposed WCF facilities within the proposed network design area. Co-

Applicant's radio frequency engineers have conducted studies and tests in order to develop a highly efficient network that is designed to handle voice and data traffic in the service area. The engineers determined an optimum area for the placement of the proposed facility in terms of elevation and location to provide the best quality service to customers in the service area. A radio frequency design search area prepared in reference to these radio frequency studies was considered by the Co-Applicant when searching for sites for its antennas that would provide the coverage deemed necessary by the Co-Applicant. A map of the area in which the tower is proposed to be located which is drawn to scale and clearly depicts the necessary search area within which the site should be located pursuant to radio frequency requirements is attached as **Exhibit P**.

26. The tower must be located at the proposed location and proposed height to provide necessary service to wireless communications users in the subject area, as set out and documented in the RF Design Engineer's Statement of Need and Propagation Maps attached as **Exhibit Q** and **Exhibit R,** respectively. The proposed tower will expand and improve voice and data service for Verizon Wireless customers.

27. Attached hereto as **Exhibit T** please find an Affidavit of Certification for all information contained in this application.

28. All Exhibits to this Application are hereby incorporated by reference as if fully set out as part of the Application.

29. All responses and requests associated with this Application may be directed to:

Russell L. Brown
Clark, Quinn, Moses, Scott & Grahn, LLP
320 North Meridian Street, Suite 1100
Indianapolis, IN 46204
Phone: (317) 637-1321
FAX: (317) 687-2344
Email: rbrown@clarkquinnlaw.com

WHEREFORE, Co-Applicants respectfully request that the PSC accept the foregoing Application for filing and, having met the requirements of KRS §§278.020(1), 278.650, and 278 .665 and all applicable rules and regulations of the PSC, grant a Certificate of Public Convenience and Necessity to construct and operate the WCF at the location set forth herein.

Respectfully submitted,

Russell L. Brown
Clark, Quinn, Moses, Scott & Grahn, LLP
320 North Meridian Street, Suite 1100
Indianapolis, IN 46204
Phone: (317) 637-1321 / FAX: (317) 687-2344
Email: rbrown@clarkquinnlaw.com
Attorney for Cellco Partnership d/b/a Verizon Wireless

LIST OF EXHIBITS

A	Applicant Entities
B	FCC Registration and License Documentation
C	Site Development Plan: 500' Vicinity Map Legal Descriptions Flood Plain Certification Site Plan Vertical Tower Profile
D	Tower and Foundation Design
E	Competing Utilities List and Map
F	FAA Application and Determination of No Hazard
G	KAZC Application
H	Geotechnical Report
I	Directions to WCF Site
J	Real Estate Agreement
K	Notification Listing with PVA Verification
L-1	February 6 Property Owner Notification
L-2	February 21 Property Owner Notification
M	County Judge/Executive notice
N	Posted Notices
O	Newspaper Legal Notice Advertisement
P	Radio Frequency Design Search Area
Q	RF Design Engineer Statement of Need
R	Propagation Maps
S	List of Qualified Professionals
T	Affidavit of Certification

Delaware

The First State

I, JEFFREY W. BULLOCK, SECRETARY OF STATE OF THE STATE OF DELAWARE, DO HEREBY CERTIFY "CELLCO PARTNERSHIP" IS DULY FORMED UNDER THE LAWS OF THE STATE OF DELAWARE AND IS IN GOOD STANDING AND HAS A LEGAL EXISTENCE SO FAR AS THE RECORDS OF THIS OFFICE SHOW, AS OF THE TWENTY-SEVENTH DAY OF APRIL, A.D. 2023.

AND I DO HEREBY FURTHER CERTIFY THAT THE ANNUAL TAXES HAVE BEEN PAID TO DATE.

Jeffrey W. Bullock, Secretary of State

3341134 8300

SR# 20231665976

Authentication: 203227418

Date: 04-27-23

You may verify this certificate online at corp.delaware.gov/authver.shtml

COMMONWEALTH OF KENTUCKY

Michael G. Adams
Secretary of State

Certificate

I, Michael G. Adams, Secretary of State for the Commonwealth of Kentucky, do hereby certify that the foregoing writing has been carefully compared by me with the original thereof, now in my official custody as Secretary of State and remaining on file in my office, and found to be a true and correct copy of

CERTIFICATE OF ASSUMED NAME OF VERIZON WIRELESS ADOPTED BY GENERAL PARTNERS OF CELLCO PARTNERSHIP FILED JUNE 21, 2006.

IN WITNESS WHEREOF, I have hereunto set my hand and affixed my Official Seal at Frankfort, Kentucky, this 10th day of May, 2023.

COMMONWEALTH OF KENTUCKY
OFFICE OF SECRETARY OF STATE

Michael G. Adams
Secretary of State
Commonwealth of Kentucky
kdcoleman/0641227 - Certificate ID: 290787

COMMONWEALTH OF KENTUCKY
TREY GRAYSON
SECRETARY OF STATE

0641227.07 Dcornish C226

Trey Grayson
Secretary of State
Received and Filed
06/21/2006 12:06:09 PM
Fee Receipt: $20.00

CERTIFICATE OF ASSUMED NAME

This certifies that the assumed name of

Verizon Wireless

[Name under which the business will be conducted]

has been adopted by See Addendum

[Real name - KRS 365.015(1)]

which is the "real name" of [YOU MUST CHECK ONE]

- [ ] a Domestic General Partnership
- [ ] a Domestic Registered Limited Liability Partnership
- [ ] a Domestic Limited Partnership
- [ ] a Domestic Business Trust
- [ ] a Domestic Corporation
- [ ] a Domestic Limited Liability Company
- [ ] a Joint Venture
- [✓] a Foreign General Partnership
- [ ] a Foreign Registered Limited Liability Partnership
- [ ] a Foreign Limited Partnership
- [ ] a Foreign Business Trust
- [ ] a Foreign Corporation
- [ ] a Foreign Limited Liability Company

organized and existing in the state or country of Delaware, and whose address is

One Verizon Way	Basking Ridge	NJ	07920
Street address, if any	City	State	Zip Code

The certificate of assumed name is executed by

NYNEX PCS Inc.

Jane A. Schapker

Signature

Jane A. Schapker-Assistant Secretary

Print or type name and title

June 15, 2006

Date

Signature

Print or type name and title

Date

SSC-225 (7/96)

(See attached sheet for instructions)

Addendum

The full name of the Partnership is Cellco Partnership; a Delaware general partnership with its headquarters located One Verizon Way, Basking Ridge NJ 07920-1097.

General Partners of Cellco Partnership	**Address**
Bell Atlantic Cellular Holdings, L.P.	One Verizon Way Basking Ridge, NJ 07920
NYNEX PCS Inc.	One Verizon Way Basking Ridge, NJ 07920
PCSCO Partnership	One Verizon Way Basking Ridge, NJ 07920
GTE Wireless Incorporated	One Verizon Way Basking Ridge, NJ 07920
GTE Wireless of Ohio Incorporated	One Verizon Way Basking Ridge, NJ 07920
PCS Nucleus, L.P.	2999 Oak Road, 7th Floor Walnut Creek, CA 94597
JV PartnerCo, LLC	2999 Oak Road, 7th Floor Walnut Creek, CA 94597

Delaware

The First State

I, JEFFREY W. BULLOCK, SECRETARY OF STATE OF THE STATE OF DELAWARE, DO HEREBY CERTIFY "TOWERCOM VI-B, LLC" IS DULY FORMED UNDER THE LAWS OF THE STATE OF DELAWARE AND IS IN GOOD STANDING AND HAS A LEGAL EXISTENCE SO FAR AS THE RECORDS OF THIS OFFICE SHOW, AS OF THE NINETEENTH DAY OF DECEMBER, A.D. 2023.

AND I DO HEREBY FURTHER CERTIFY THAT THE SAID "TOWERCOM VI-B, LLC" WAS FORMED ON THE TWENTY-SECOND DAY OF NOVEMBER, A.D. 2019.

AND I DO HEREBY FURTHER CERTIFY THAT THE ANNUAL TAXES HAVE BEEN PAID TO DATE.

Jeffrey W. Bullock, Secretary of State

7717883 8300

Authentication: 204851176

SR# 20234265401

Date: 12-19-23

You may verify this certificate online at corp.delaware.gov/authver.shtml

Commonwealth of Kentucky
Michael G. Adams, Secretary of State

Michael G. Adams
Secretary of State
P. O. Box 718
Frankfort, KY 40602-0718
(502) 564-3490
http://www.sos.ky.gov

Certificate of Authorization

Authentication number: 301988
Visit https://web.sos.ky.gov/ftshow/certvalidate.aspx to authenticate this certificate.

I, Michael G. Adams, Secretary of State of the Commonwealth of Kentucky, do hereby certify that according to the records in the Office of the Secretary of State,

TOWERCOM VI-B, LLC

, a limited liability company authorized under the laws of the state of Delaware, is authorized to transact business in the Commonwealth of Kentucky, and received the authority to transact business in Kentucky on October 11, 2021.

I further certify that all fees and penalties owed to the Secretary of State have been paid; that an application for certificate of withdrawal has not been filed; and that the most recent annual report required by KRS 14A.6-010 has been delivered to the Secretary of State.

IN WITNESS WHEREOF, I have hereunto set my hand and affixed my Official Seal at Frankfort, Kentucky, this 19th day of December, 2023, in the 232nd year of the Commonwealth.

Michael G. Adams
Secretary of State
Commonwealth of Kentucky
301988/1172343

ASR Application Search

Application A1277598

Application Detail

File Number	A1277598	Constructed	
Registration Number		Dismantled	
NEPA		EMI	No

Application Information

Status	Pending	Date Received	03/05/2024
Purpose	Amendment	Entered	03/05/2024
Mode	Interactive		

Antenna Structure

Structure Type LTOWER - Lattice Tower

Location (in NAD83 Coordinates)

Lat/Long	36-50-43.3 N 085-11-00.7 W	Address	South Highway 127
City, State	Albany , KY		
Zip	42602	County	CLINTON
Center of AM Array		Position of Tower in Array	

Heights (meters)

Elevation of Site Above Mean Sea Level	Overall Height Above Ground (AGL)
303.2	79.2
Overall Height Above Mean Sea Level	Overall Height Above Ground w/o Appurtenances
382.4	77.7

Proposed Marking and/or Lighting

FAA Style E

FAA Notification

FAA Study	FAA Issue Date

Owner & Contact Information

FRN	0031937808	Owner Entity Type	Limited Liability Company

Owner

TowerCom VI-B, LLC
Attention To: Jinay Vascocu
241 Atlantic Blvd
Suite 201
Neptune Beach , FL 32266

P: (678)679-7122
F:
E: jvascocu@towercomenterprises.com

Contact

Attention To: Jinay Vascocu
241 Atlantic Blvd
Suite 201
Neptune Beach , FL 32266

P: (678)679-7122
F:
E: jvascocu@towercomenterprises.com

Environmental Compliance

Does the applicant request a Waiver of the Commission's rules for environmental notice?	Is the applicant submitting an Environmental Assessment?
No	No
Is another Federal Agency taking responsibility for environmental review?	Does the applicant certify to No Significant Environmental Effect pursuant to Section
No	
Reason for another Federal Agency taking responsibility for environmental review	Basis for Certification
Name of Federal Agency	Local Notice Date
National Notice Date	
03/08/2024	

Certification

Authorized Party	Claspy, Anna C	Title	Architectural Historian, EBI Consulting
Receipt Date	03/05/2024		

Comments

Comments

None

History

Date	Event
02/23/2024	New Application Received

Trans Log

Date	Description	Existing Value	Requested Value

03/05/2024	Environmental Compliance : National Notice Date	04/12/2024	03/08/2024
02/26/2024	Application : Identify the change type as Major or Minor	Minor	Major
02/26/2024	Structure : The type of the antenna structure	MTOWER	LTOWER

Pleadings

Pleading Type	Filer Name	Description	Date Entered
None			

Automated Letters

Date	Description
None	

Attachments

Type	Description	Date Entered
None		

CLOSE WINDOW

Federal Communications Commission
Wireless Telecommunications Bureau

RADIO STATION AUTHORIZATION

LICENSEE: CELLCO PARTNERSHIP

ATTN: REGULATORY
CELLCO PARTNERSHIP
5055 NORTH POINT PKWY, NP2NE ENGINEERING
ALPHARETTA, GA 30022

Call Sign	File Number
KNKN814	0009262182
Radio Service CL - Cellular	
Market Numer CMA447	**Channel Block** B
Sub-Market Designator 0	

FCC Registration Number (FRN): 0003290673

Market Name
Kentucky 5 - Barren

Grant Date	Effective Date	Expiration Date	Five Yr Build-Out Date	Print Date
09-01-2020	01-13-2021	10-01-2030		

Site Information:

Location	Latitude	Longitude	Ground Elevation (meters)	Structure Hgt to Tip (meters)	Antenna Structure Registration No.
1	37-06-37.0 N	085-58-40.0 W	320.0	82.3	1205611

Address: Prewitt's Knob, 4.8 km WSW of
City: CAVE CITY **County:** BARREN **State:** KY **Construction Deadline:**

Antenna: 1
Maximum Transmitting ERP in Watts: 140.820

Azimuth(from true north)	0	45	90	135	180	225	270	315
Antenna Height AAT (meters)	177.600	194.100	184.800	162.400	189.800	184.600	178.000	165.400
Transmitting ERP (watts)	116.290	30.310	1.400	0.270	0.270	0.270	0.700	31.720

Antenna: 2
Maximum Transmitting ERP in Watts: 140.820

Azimuth(from true north)	0	45	90	135	180	225	270	315
Antenna Height AAT (meters)	177.600	194.100	184.800	162.400	189.800	184.600	178.000	165.400
Transmitting ERP (watts)	0.710	17.400	93.440	120.380	32.400	3.090	0.300	0.340

Antenna: 3
Maximum Transmitting ERP in Watts: 140.820

Azimuth(from true north)	0	45	90	135	180	225	270	315
Antenna Height AAT (meters)	177.600	194.100	184.800	162.400	189.800	184.600	178.000	165.400
Transmitting ERP (watts)	1.200	0.310	0.310	4.010	35.100	128.660	96.240	16.600

Conditions:
Pursuant to §309(h) of the Communications Act of 1934, as amended, 47 U.S.C. §309(h), this license is subject to the following conditions: This license shall not vest in the licensee any right to operate the station nor any right in the use of the frequencies designated in the license beyond the term thereof nor in any other manner than authorized herein. Neither the license nor the right granted thereunder shall be assigned or otherwise transferred in violation of the Communications Act of 1934, as amended. See 47 U.S.C. § 310(d). This license is subject in terms to the right of use or control conferred by §706 of the Communications Act of 1934, as amended. See 47 U.S.C. §606.

FCC 601-C
March 2018

Licensee Name: CELLCO PARTNERSHIP

Call Sign: KNKN814 **File Number:** 0009262182 **Print Date:**

Location	Latitude	Longitude	Ground Elevation (meters)	Structure Hgt to Tip (meters)	Antenna Structure Registration No.
2	37-03-16.0 N	085-05-15.0 W	335.3	66.4	1060800

Address: 1.6 km WNW of intersec. of Cumberland Pkwy & US Hwy 127

City: RUSSELL SPRINGS **County:** RUSSELL **State:** KY **Construction Deadline:**

Antenna: 1

Maximum Transmitting ERP in Watts: 140.820

Azimuth(from true north)	0	45	90	135	180	225	270	315
Antenna Height AAT (meters)	111.300	101.700	102.100	123.200	116.700	113.000	135.800	103.700
Transmitting ERP (watts)	157.100	105.670	17.850	1.800	0.480	4.050	25.570	109.870

Antenna: 3

Maximum Transmitting ERP in Watts: 140.820

Azimuth(from true north)	0	45	90	135	180	225	270	315
Antenna Height AAT (meters)	111.300	101.700	102.100	123.200	116.700	113.000	135.800	103.700
Transmitting ERP (watts)	7.280	10.650	18.520	10.350	23.010	5.410	0.740	1.090

Antenna: 4

Maximum Transmitting ERP in Watts: 140.820

Azimuth(from true north)	0	45	90	135	180	225	270	315
Antenna Height AAT (meters)	113.000	101.700	102.100	123.200	116.700	113.000	135.800	103.700
Transmitting ERP (watts)	4.030	0.340	2.430	11.890	72.190	167.790	144.670	35.900

Location	Latitude	Longitude	Ground Elevation (meters)	Structure Hgt to Tip (meters)	Antenna Structure Registration No.
3	37-19-27.0 N	085-55-08.0 W	288.0	82.3	1043058

Address: DIVIDING RIDGE; 5.6 km NNW of

City: MUNFORDVILLE **County:** HART **State:** KY **Construction Deadline:**

Antenna: 1

Maximum Transmitting ERP in Watts: 140.820

Azimuth(from true north)	0	45	90	135	180	225	270	315
Antenna Height AAT (meters)	124.200	120.700	125.700	160.200	151.900	137.900	133.400	146.300
Transmitting ERP (watts)	91.350	124.410	70.660	14.380	1.420	0.610	6.040	27.050

Antenna: 2

Maximum Transmitting ERP in Watts: 140.820

Azimuth(from true north)	0	45	90	135	180	225	270	315
Antenna Height AAT (meters)	124.200	120.700	125.700	160.200	151.900	137.900	133.400	146.300
Transmitting ERP (watts)	1.140	6.890	50.200	154.120	159.580	51.140	6.200	0.410

Antenna: 3

Maximum Transmitting ERP in Watts: 140.820

Azimuth(from true north)	0	45	90	135	180	225	270	315
Antenna Height AAT (meters)	124.200	120.700	125.700	160.200	151.900	137.900	133.400	146.300
Transmitting ERP (watts)	27.250	2.690	0.340	1.880	14.510	77.820	164.920	130.790

Licensee Name: CELLCO PARTNERSHIP

Call Sign: KNKN814 **File Number:** 0009262182 **Print Date:**

Location	Latitude	Longitude	Ground Elevation (meters)	Structure Hgt to Tip (meters)	Antenna Structure Registration No.
4	36-58-37.0 N	085-53-48.0 W	267.0	128.9	1202695

Address: Temple Hill Road, 6.7 mi southeast of Glasgow Municipal Airport

City: GLASGOW **County:** BARREN **State:** KY **Construction Deadline:**

Antenna: 1

Maximum Transmitting ERP in Watts: 140.820

Azimuth(from true north)	0	45	90	135	180	225	270	315
Antenna Height AAT (meters)	113.000	94.500	72.300	103.400	109.800	145.800	136.400	121.300
Transmitting ERP (watts)	74.230	41.180	7.090	0.410	0.310	0.390	7.600	43.080

Antenna: 2

Maximum Transmitting ERP in Watts: 140.820

Azimuth(from true north)	0	45	90	135	180	225	270	315
Antenna Height AAT (meters)	165.400	147.000	124.700	155.800	162.300	198.300	188.800	173.800
Transmitting ERP (watts)	1.760	14.820	66.340	80.440	26.520	3.020	0.330	0.270

Antenna: 3

Maximum Transmitting ERP in Watts: 140.820

Azimuth(from true north)	0	45	90	135	180	225	270	315
Antenna Height AAT (meters)	113.000	94.500	72.300	103.400	109.800	145.800	136.400	121.300
Transmitting ERP (watts)	1.270	0.300	0.410	2.910	34.430	104.650	82.670	15.310

Location	Latitude	Longitude	Ground Elevation (meters)	Structure Hgt to Tip (meters)	Antenna Structure Registration No.
5	36-53-50.0 N	084-57-27.0 W	294.1	128.0	1200492

Address: Lake Cumberland,11.3 km NW of

City: MONTICELLO **County:** WAYNE **State:** KY **Construction Deadline:**

Antenna: 1

Maximum Transmitting ERP in Watts: 140.820

Azimuth(from true north)	0	45	90	135	180	225	270	315
Antenna Height AAT (meters)	120.400	125.800	96.900	52.400	95.800	123.100	148.300	129.500
Transmitting ERP (watts)	90.910	34.180	4.210	0.270	0.310	1.110	14.630	66.270

Antenna: 2

Maximum Transmitting ERP in Watts: 140.820

Azimuth(from true north)	0	45	90	135	180	225	270	315
Antenna Height AAT (meters)	120.400	125.800	96.900	52.400	95.800	123.100	148.300	129.500
Transmitting ERP (watts)	0.830	14.810	83.280	102.460	28.880	2.520	0.320	0.260

Antenna: 3

Maximum Transmitting ERP in Watts: 140.820

Azimuth(from true north)	0	45	90	135	180	225	270	315
Antenna Height AAT (meters)	120.400	125.800	96.900	52.400	95.800	123.100	148.300	129.500
Transmitting ERP (watts)	3.460	0.270	1.950	8.860	44.980	98.820	85.200	24.700

Licensee Name: CELLCO PARTNERSHIP

Call Sign: KNKN814 **File Number:** 0009262182 **Print Date:**

Location	Latitude	Longitude	Ground Elevation (meters)	Structure Hgt to Tip (meters)	Antenna Structure Registration No.
6	36-59-41.0 N	085-33-38.0 W	310.0	128.0	1043059

Address: Hickory Ridge
City: Edmonton **County:** METCALFE **State:** KY **Construction Deadline:**

Antenna: 1
Maximum Transmitting ERP in Watts: 140.820

Azimuth(from true north)	0	45	90	135	180	225	270	315
Antenna Height AAT (meters)	158.100	156.900	114.200	137.500	150.900	131.600	139.600	152.400
Transmitting ERP (watts)	81.690	152.110	56.510	6.340	0.340	0.360	0.450	11.810

Antenna: 2
Maximum Transmitting ERP in Watts: 140.820

Azimuth(from true north)	0	45	90	135	180	225	270	315
Antenna Height AAT (meters)	158.100	156.900	114.200	137.500	150.900	131.600	139.600	152.400
Transmitting ERP (watts)	0.370	0.580	15.570	95.970	145.260	45.940	4.810	0.340

Antenna: 3
Maximum Transmitting ERP in Watts: 140.820

Azimuth(from true north)	0	45	90	135	180	225	270	315
Antenna Height AAT (meters)	158.100	156.900	114.200	137.500	150.900	131.600	139.600	152.400
Transmitting ERP (watts)	13.870	0.940	0.340	0.390	4.390	49.220	145.260	93.790

Location	Latitude	Longitude	Ground Elevation (meters)	Structure Hgt to Tip (meters)	Antenna Structure Registration No.
7	36-43-21.4 N	085-07-37.2 W	410.8	77.7	1239784

Address: On Mountain Lane
City: Albany **County:** CLINTON **State:** KY **Construction Deadline:**

Antenna: 1
Maximum Transmitting ERP in Watts: 140.820

Azimuth(from true north)	0	45	90	135	180	225	270	315
Antenna Height AAT (meters)	224.400	172.000	96.100	151.900	211.500	206.300	193.800	200.600
Transmitting ERP (watts)	214.860	95.980	11.540	0.590	0.480	0.570	12.360	100.500

Antenna: 2
Maximum Transmitting ERP in Watts: 140.820

Azimuth(from true north)	0	45	90	135	180	225	270	315
Antenna Height AAT (meters)	224.400	172.000	96.100	151.900	211.500	206.300	193.800	200.600
Transmitting ERP (watts)	1.150	28.320	152.110	195.960	52.740	5.040	0.480	0.550

Antenna: 3
Maximum Transmitting ERP in Watts: 140.820

Azimuth(from true north)	0	45	90	135	180	225	270	315
Antenna Height AAT (meters)	224.400	172.000	96.100	151.900	211.500	206.300	193.800	200.600
Transmitting ERP (watts)	1.910	0.480	0.570	4.190	56.510	195.960	152.110	25.240

Licensee Name: CELLCO PARTNERSHIP

Call Sign: KNKN814 **File Number:** 0009262182 **Print Date:**

Location	Latitude	Longitude	Ground Elevation (meters)	Structure Hgt to Tip (meters)	Antenna Structure Registration No.
8	36-41-54.0 N	085-41-07.0 W	286.5	90.2	1065560

Address: 403 Martin Subdivision

City: Tompkinsville **County:** MONROE **State:** KY **Construction Deadline:**

Antenna: 1

Maximum Transmitting ERP in Watts: 140.820

Azimuth(from true north)	0	45	90	135	180	225	270	315
Antenna Height AAT (meters)	82.200	93.700	157.900	97.200	83.000	115.700	100.900	88.500
Transmitting ERP (watts)	128.990	56.630	6.540	0.320	0.260	0.340	7.510	59.300

Antenna: 2

Maximum Transmitting ERP in Watts: 140.820

Azimuth(from true north)	0	45	90	135	180	225	270	315
Antenna Height AAT (meters)	82.200	93.700	157.900	97.200	83.000	115.700	100.900	88.500
Transmitting ERP (watts)	0.690	16.910	90.270	116.960	30.240	2.840	0.260	0.330

Antenna: 3

Maximum Transmitting ERP in Watts: 140.820

Azimuth(from true north)	0	45	90	135	180	225	270	315
Antenna Height AAT (meters)	82.200	93.700	157.900	97.200	83.000	115.700	100.900	88.500
Transmitting ERP (watts)	1.070	0.260	0.340	2.530	33.930	116.960	90.270	14.390

Location	Latitude	Longitude	Ground Elevation (meters)	Structure Hgt to Tip (meters)	Antenna Structure Registration No.
9	36-42-45.0 N	084-29-53.0 W	388.0	128.0	1043060

Address: 2.7 KM SOUTHWEST OF

City: Whitley City **County:** MCCREARY **State:** KY **Construction Deadline:**

Antenna: 1

Maximum Transmitting ERP in Watts: 140.820

Azimuth(from true north)	0	45	90	135	180	225	270	315
Antenna Height AAT (meters)	115.300	140.200	111.300	77.100	88.000	150.900	147.400	183.900
Transmitting ERP (watts)	130.970	169.690	43.870	4.120	0.380	0.470	1.010	24.530

Antenna: 2

Maximum Transmitting ERP in Watts: 140.820

Azimuth(from true north)	0	45	90	135	180	225	270	315
Antenna Height AAT (meters)	115.300	140.200	111.300	77.100	88.000	150.900	147.400	183.900
Transmitting ERP (watts)	0.500	3.670	49.220	169.690	130.970	20.880	1.560	0.380

Antenna: 3

Maximum Transmitting ERP in Watts: 140.820

Azimuth(from true north)	0	45	90	135	180	225	270	315
Antenna Height AAT (meters)	115.300	140.200	111.300	77.100	88.000	150.900	147.400	183.900
Transmitting ERP (watts)	9.490	0.470	0.380	0.490	10.890	86.030	187.140	82.160

Licensee Name: CELLCO PARTNERSHIP

Call Sign: KNKN814 **File Number:** 0009262182 **Print Date:**

Location	Latitude	Longitude	Ground Elevation (meters)	Structure Hgt to Tip (meters)	Antenna Structure Registration No.
10	37-07-32.0 N	085-18-48.0 W	243.2	128.0	1043061

Address: 2.1 KM North of

City: COLUMBIA **County:** ADAIR **State:** KY **Construction Deadline:**

Antenna: 1

Maximum Transmitting ERP in Watts: 140.820

Azimuth(from true north)	0	45	90	135	180	225	270	315
Antenna Height AAT (meters)	98.900	97.600	62.700	93.000	69.900	86.900	132.000	98.600
Transmitting ERP (watts)	239.640	126.580	20.700	2.100	0.480	2.050	17.500	119.190

Antenna: 2

Maximum Transmitting ERP in Watts: 140.820

Azimuth(from true north)	0	45	90	135	180	225	270	315
Antenna Height AAT (meters)	98.900	97.600	62.700	93.000	69.900	86.900	132.000	98.600
Transmitting ERP (watts)	3.050	25.240	104.080	134.110	50.730	6.640	0.400	0.300

Antenna: 3

Maximum Transmitting ERP in Watts: 140.820

Azimuth(from true north)	0	45	90	135	180	225	270	315
Antenna Height AAT (meters)	98.900	97.600	62.700	93.000	69.900	86.900	132.000	98.600
Transmitting ERP (watts)	3.170	0.300	0.350	6.140	45.530	132.880	110.500	28.320

Location	Latitude	Longitude	Ground Elevation (meters)	Structure Hgt to Tip (meters)	Antenna Structure Registration No.
11	36-47-11.0 N	085-23-02.0 W	261.5	96.0	1040490

Address: 0.8 KM WEST OF

City: BURKESVILLE **County:** CUMBERLAND **State:** KY **Construction Deadline:**

Antenna: 1

Maximum Transmitting ERP in Watts: 140.820

Azimuth(from true north)	0	45	90	135	180	225	270	315
Antenna Height AAT (meters)	109.300	130.200	87.400	84.800	79.600	143.200	144.000	116.600
Transmitting ERP (watts)	44.180	161.980	121.160	20.900	1.520	0.390	0.390	5.050

Antenna: 2

Maximum Transmitting ERP in Watts: 140.820

Azimuth(from true north)	0	45	90	135	180	225	270	315
Antenna Height AAT (meters)	109.300	130.200	87.400	84.800	79.600	143.200	144.000	116.600
Transmitting ERP (watts)	0.560	1.140	15.410	114.810	250.130	112.190	13.700	0.800

Antenna: 3

Maximum Transmitting ERP in Watts: 140.820

Azimuth(from true north)	0	45	90	135	180	225	270	315
Antenna Height AAT (meters)	109.300	130.200	87.400	84.800	79.600	143.200	144.000	116.600
Transmitting ERP (watts)	42.590	4.040	0.390	0.390	2.230	22.340	121.440	153.980

Licensee Name: CELLCO PARTNERSHIP

Call Sign: KNKN814 **File Number:** 0009262182 **Print Date:**

Location	Latitude	Longitude	Ground Elevation (meters)	Structure Hgt to Tip (meters)	Antenna Structure Registration No.
12	36-59-14.9 N	085-04-03.0 W	300.2	77.4	1249806

Address: 263 N. Main St. (KY13172-A)

City: JAMESTOWN **County:** RUSSELL **State:** KY **Construction Deadline:**

Antenna: 1

Maximum Transmitting ERP in Watts: 140.820

Azimuth(from true north)	0	45	90	135	180	225	270	315
Antenna Height AAT (meters)	57.700	75.100	111.400	128.200	123.100	114.300	81.000	84.000
Transmitting ERP (watts)	131.780	61.330	9.560	0.760	0.650	5.540	28.840	110.190

Antenna: 2

Maximum Transmitting ERP in Watts: 140.820

Azimuth(from true north)	0	45	90	135	180	225	270	315
Antenna Height AAT (meters)	57.700	75.100	111.400	128.200	123.100	114.300	81.000	84.000
Transmitting ERP (watts)	6.950	33.550	98.830	109.490	46.690	7.510	0.630	0.950

Antenna: 3

Maximum Transmitting ERP in Watts: 140.820

Azimuth(from true north)	0	45	90	135	180	225	270	315
Antenna Height AAT (meters)	57.700	75.100	111.400	128.200	123.100	114.300	81.000	84.000
Transmitting ERP (watts)	3.530	0.270	2.170	9.880	52.760	110.760	95.040	27.210

Location	Latitude	Longitude	Ground Elevation (meters)	Structure Hgt to Tip (meters)	Antenna Structure Registration No.
13	36-48-31.1 N	084-50-43.5 W	466.6	61.0	1004214

Address: 3.2 KM SSE OF

City: MONTICELLO **County:** WAYNE **State:** KY **Construction Deadline:**

Antenna: 1

Maximum Transmitting ERP in Watts: 140.820

Azimuth(from true north)	0	45	90	135	180	225	270	315
Antenna Height AAT (meters)	228.300	178.600	196.200	196.600	182.100	180.800	223.600	233.200
Transmitting ERP (watts)	83.280	46.200	7.950	0.460	0.350	0.440	8.520	48.340

Antenna: 2

Maximum Transmitting ERP in Watts: 140.820

Azimuth(from true north)	0	45	90	135	180	225	270	315
Antenna Height AAT (meters)	228.300	178.600	196.200	196.600	182.100	180.800	223.600	233.200
Transmitting ERP (watts)	1.990	19.910	108.240	137.240	37.950	3.600	0.350	0.340

Antenna: 3

Maximum Transmitting ERP in Watts: 140.820

Azimuth(from true north)	0	45	90	135	180	225	270	315
Antenna Height AAT (meters)	228.300	178.600	196.200	196.600	182.100	180.800	223.600	233.200
Transmitting ERP (watts)	1.460	0.330	0.430	3.080	30.780	77.930	65.130	15.620

Licensee Name: CELLCO PARTNERSHIP

Call Sign: KNKN814 **File Number:** 0009262182 **Print Date:**

Location	Latitude	Longitude	Ground Elevation (meters)	Structure Hgt to Tip (meters)	Antenna Structure Registration No.
15	36-48-09.1 N	085-49-35.8 W	307.8	128.0	1215547

Address: Within the City Limits of

City: Mt. Hermon **County:** MONROE **State:** KY **Construction Deadline:**

Antenna: 1

Maximum Transmitting ERP in Watts: 140.820

Azimuth(from true north)	0	45	90	135	180	225	270	315
Antenna Height AAT (meters)	162.800	133.200	119.800	115.200	131.300	145.600	162.100	140.800
Transmitting ERP (watts)	232.350	122.730	20.070	2.030	0.470	1.980	16.970	115.570

Antenna: 2

Maximum Transmitting ERP in Watts: 140.820

Azimuth(from true north)	0	45	90	135	180	225	270	315
Antenna Height AAT (meters)	162.800	133.200	119.800	115.200	131.300	145.600	162.100	140.800
Transmitting ERP (watts)	4.690	38.790	159.940	206.090	77.960	10.200	0.610	0.470

Antenna: 3

Maximum Transmitting ERP in Watts: 140.820

Azimuth(from true north)	0	45	90	135	180	225	270	315
Antenna Height AAT (meters)	162.800	133.200	119.800	115.200	131.300	145.600	162.100	140.800
Transmitting ERP (watts)	3.360	0.320	0.370	6.500	48.220	140.750	117.050	30.000

Location	Latitude	Longitude	Ground Elevation (meters)	Structure Hgt to Tip (meters)	Antenna Structure Registration No.
16	37-11-42.5 N	085-57-13.0 W	267.6	99.1	1224165

Address: Highway 31 E

City: Horse Cave **County:** HART **State:** KY **Construction Deadline:**

Antenna: 1

Maximum Transmitting ERP in Watts: 140.820

Azimuth(from true north)	0	45	90	135	180	225	270	315
Antenna Height AAT (meters)	140.200	157.200	137.200	138.800	124.400	106.600	128.000	139.900
Transmitting ERP (watts)	70.890	131.990	49.040	5.500	0.300	0.310	0.390	10.250

Antenna: 2

Maximum Transmitting ERP in Watts: 140.820

Azimuth(from true north)	0	45	90	135	180	225	270	315
Antenna Height AAT (meters)	140.200	157.200	137.200	138.800	124.400	106.600	128.000	139.900
Transmitting ERP (watts)	0.440	1.350	27.580	128.990	141.440	31.660	2.890	0.370

Antenna: 3

Maximum Transmitting ERP in Watts: 140.820

Azimuth(from true north)	0	45	90	135	180	225	270	315
Antenna Height AAT (meters)	140.200	157.200	137.200	138.800	124.400	106.600	128.000	139.900
Transmitting ERP (watts)	12.040	0.810	0.300	0.340	3.810	42.710	126.050	81.390

Licensee Name: CELLCO PARTNERSHIP

Call Sign: KNKN814 **File Number:** 0009262182 **Print Date:**

Location	Latitude	Longitude	Ground Elevation (meters)	Structure Hgt to Tip (meters)	Antenna Structure Registration No.
17	36-53-08.5 N	086-01-21.5 W	219.5	77.7	1229912

Address: Barren River Lake, 1450 meters southeast of

City: Lucas **County:** BARREN **State:** KY **Construction Deadline:**

Antenna: 1

Maximum Transmitting ERP in Watts: 140.820

Azimuth(from true north)	0	45	90	135	180	225	270	315
Antenna Height AAT (meters)	82.400	76.400	65.300	73.600	82.100	72.000	115.600	93.200
Transmitting ERP (watts)	64.900	199.280	206.330	66.120	8.020	0.530	1.470	8.910

Antenna: 2

Maximum Transmitting ERP in Watts: 140.820

Azimuth(from true north)	0	45	90	135	180	225	270	315
Antenna Height AAT (meters)	82.400	76.400	65.300	73.600	82.100	72.000	115.600	93.200
Transmitting ERP (watts)	0.430	2.430	18.770	100.610	213.240	169.110	35.230	3.480

Antenna: 3

Maximum Transmitting ERP in Watts: 140.820

Azimuth(from true north)	0	45	90	135	180	225	270	315
Antenna Height AAT (meters)	82.400	76.400	65.300	73.600	82.100	72.000	115.600	93.200
Transmitting ERP (watts)	115.020	18.140	1.460	0.580	6.420	36.290	153.840	208.960

Location	Latitude	Longitude	Ground Elevation (meters)	Structure Hgt to Tip (meters)	Antenna Structure Registration No.
18	37-04-08.3 N	084-59-07.6 W	301.8	58.0	

Address: Russell East, in the town of

City: Salem **County:** RUSSELL **State:** KY **Construction Deadline:**

Antenna: 1

Maximum Transmitting ERP in Watts: 140.820

Azimuth(from true north)	0	45	90	135	180	225	270	315
Antenna Height AAT (meters)	81.400	40.400	50.100	92.000	90.100	70.500	49.200	57.100
Transmitting ERP (watts)	45.240	155.980	120.380	19.190	1.430	0.350	0.460	3.370

Antenna: 2

Maximum Transmitting ERP in Watts: 140.820

Azimuth(from true north)	0	45	90	135	180	225	270	315
Antenna Height AAT (meters)	81.400	40.400	50.100	92.000	90.100	70.500	49.200	57.100
Transmitting ERP (watts)	0.350	0.450	10.100	79.080	172.010	75.520	8.720	0.430

Antenna: 3

Maximum Transmitting ERP in Watts: 140.820

Azimuth(from true north)	0	45	90	135	180	225	270	315
Antenna Height AAT (meters)	81.400	40.400	50.100	92.000	90.100	70.500	49.200	57.100
Transmitting ERP (watts)	40.320	3.780	0.350	0.430	0.920	22.550	120.380	155.980

Licensee Name: CELLCO PARTNERSHIP

Call Sign: KNKN814 **File Number:** 0009262182 **Print Date:**

Location	Latitude	Longitude	Ground Elevation (meters)	Structure Hgt to Tip (meters)	Antenna Structure Registration No.
19	37-01-53.2 N	086-02-59.7 W	230.1	53.3	

Address: Barren West, 1.1 km SE of intersection of Route 255 and Cumberland Parkway

City: Bon Ayr **County:** BARREN **State:** KY **Construction Deadline:**

Antenna: 1

Maximum Transmitting ERP in Watts: 140.820

Azimuth(from true north)	0	45	90	135	180	225	270	315
Antenna Height AAT (meters)	48.000	59.100	62.400	62.000	76.300	71.700	67.700	68.900
Transmitting ERP (watts)	10.930	71.760	174.250	150.580	36.510	3.930	0.360	2.010

Antenna: 4

Maximum Transmitting ERP in Watts: 140.820

Azimuth(from true north)	0	45	90	135	180	225	270	315
Antenna Height AAT (meters)	48.000	59.100	62.400	62.000	76.300	71.700	67.700	68.900
Transmitting ERP (watts)	1.660	0.370	3.640	24.330	110.220	166.180	109.490	18.120

Antenna: 5

Maximum Transmitting ERP in Watts: 140.820

Azimuth(from true north)	0	45	90	135	180	225	270	315
Antenna Height AAT (meters)	48.000	59.100	62.400	62.000	76.300	71.700	67.700	68.900
Transmitting ERP (watts)	241.800	133.090	20.990	1.690	0.670	7.430	41.990	187.010

Location	Latitude	Longitude	Ground Elevation (meters)	Structure Hgt to Tip (meters)	Antenna Structure Registration No.
20	36-59-57.9 N	085-42-14.4 W	304.8	38.1	

Address: Barren East, 1.5 km ESE of

City: Wisdom **County:** METCALFE **State:** KY **Construction Deadline:**

Antenna: 1

Maximum Transmitting ERP in Watts: 140.820

Azimuth(from true north)	0	45	90	135	180	225	270	315
Antenna Height AAT (meters)	83.800	114.600	79.500	77.500	56.000	94.100	87.900	92.000
Transmitting ERP (watts)	182.210	79.990	9.240	0.460	0.370	0.480	10.610	83.760

Antenna: 2

Maximum Transmitting ERP in Watts: 140.820

Azimuth(from true north)	0	45	90	135	180	225	270	315
Antenna Height AAT (meters)	83.800	114.600	79.500	77.500	56.000	94.100	87.900	92.000
Transmitting ERP (watts)	3.340	55.130	223.280	203.210	38.060	3.110	0.540	0.700

Antenna: 3

Maximum Transmitting ERP in Watts: 140.820

Azimuth(from true north)	0	45	90	135	180	225	270	315
Antenna Height AAT (meters)	83.800	114.600	79.500	77.500	56.000	94.100	87.900	92.000
Transmitting ERP (watts)	2.970	0.370	0.470	1.480	30.120	143.340	153.910	33.100

Licensee Name: CELLCO PARTNERSHIP

Call Sign: KNKN814 **File Number:** 0009262182 **Print Date:**

Location	Latitude	Longitude	Ground Elevation (meters)	Structure Hgt to Tip (meters)	Antenna Structure Registration No.
21	36-52-38.0 N	085-39-59.1 W	347.5	42.4	

Address: 5 km east of

City: Summer Shade **County:** METCALFE **State:** KY **Construction Deadline:**

Antenna: 1

Maximum Transmitting ERP in Watts: 140.820

Azimuth(from true north)	0	45	90	135	180	225	270	315
Antenna Height AAT (meters)	137.700	116.600	133.500	131.800	89.700	109.800	135.900	112.700
Transmitting ERP (watts)	182.210	79.990	9.240	0.460	0.370	0.480	10.610	83.760

Antenna: 2

Maximum Transmitting ERP in Watts: 140.820

Azimuth(from true north)	0	45	90	135	180	225	270	315
Antenna Height AAT (meters)	137.700	116.600	133.500	131.800	89.700	109.800	135.900	112.700
Transmitting ERP (watts)	2.890	26.340	135.690	168.870	47.270	4.440	0.480	0.380

Antenna: 3

Maximum Transmitting ERP in Watts: 140.820

Azimuth(from true north)	0	45	90	135	180	225	270	315
Antenna Height AAT (meters)	137.700	116.600	133.500	131.800	89.700	109.800	135.900	112.700
Transmitting ERP (watts)	1.520	0.370	0.480	3.570	47.930	165.220	127.520	20.330

Location	Latitude	Longitude	Ground Elevation (meters)	Structure Hgt to Tip (meters)	Antenna Structure Registration No.
22	37-04-40.6 N	085-10-27.6 W	299.0	86.9	1048811

Address: ADAIR EAST, 7955 RUSSELL SPRINGS ROAD

City: RUSSELL SPRINGS **County:** ADAIR **State:** KY **Construction Deadline:**

Antenna: 1

Maximum Transmitting ERP in Watts: 140.820

Azimuth(from true north)	0	45	90	135	180	225	270	315
Antenna Height AAT (meters)	102.600	66.400	51.500	64.800	80.000	101.700	115.200	90.300
Transmitting ERP (watts)	112.350	104.850	19.980	1.660	0.300	0.350	1.660	27.580

Antenna: 2

Maximum Transmitting ERP in Watts: 140.820

Azimuth(from true north)	0	45	90	135	180	225	270	315
Antenna Height AAT (meters)	102.600	66.400	51.500	64.800	80.000	101.700	115.200	90.300
Transmitting ERP (watts)	0.350	5.720	51.470	125.910	71.710	11.750	0.560	0.300

Antenna: 3

Maximum Transmitting ERP in Watts: 140.820

Azimuth(from true north)	0	45	90	135	180	225	270	315
Antenna Height AAT (meters)	102.600	66.400	51.500	64.800	80.000	101.700	115.200	90.300
Transmitting ERP (watts)	4.170	0.300	0.320	0.500	13.510	83.280	126.050	39.860

Licensee Name: CELLCO PARTNERSHIP

Call Sign: KNKN814 **File Number:** 0009262182 **Print Date:**

Location	Latitude	Longitude	Ground Elevation (meters)	Structure Hgt to Tip (meters)	Antenna Structure Registration No.
23	37-00-11.8 N	085-55-24.4 W	245.4	79.2	1223174

Address: Glasgow Downtown, 105 Lincoln Road

City: Glasgow **County:** BARREN **State:** KY **Construction Deadline:**

Antenna: 1

Maximum Transmitting ERP in Watts: 140.820

Azimuth(from true north)	0	45	90	135	180	225	270	315
Antenna Height AAT (meters)	84.400	76.300	52.500	64.900	82.900	99.000	87.700	89.600
Transmitting ERP (watts)	1.130	36.370	134.760	36.800	2.250	0.320	0.320	0.320

Antenna: 2

Maximum Transmitting ERP in Watts: 140.820

Azimuth(from true north)	0	45	90	135	180	225	270	315
Antenna Height AAT (meters)	84.400	76.300	52.500	64.900	82.900	99.000	87.700	89.600
Transmitting ERP (watts)	0.320	0.320	1.130	30.890	105.820	31.270	2.250	0.320

Antenna: 3

Maximum Transmitting ERP in Watts: 140.820

Azimuth(from true north)	0	45	90	135	180	225	270	315
Antenna Height AAT (meters)	84.400	76.300	52.500	64.900	82.900	99.000	87.700	89.600
Transmitting ERP (watts)	4.260	0.320	0.320	0.320	0.470	22.310	148.580	69.130

Location	Latitude	Longitude	Ground Elevation (meters)	Structure Hgt to Tip (meters)	Antenna Structure Registration No.
24	37-02-38.7 N	085-27-43.8 W	296.5	77.7	1242039

Address: Metcalfe East, 8050 Edmonton Road (KY Hwy 80)

City: Edmonton **County:** ADAIR **State:** KY **Construction Deadline:**

Antenna: 1

Maximum Transmitting ERP in Watts: 140.820

Azimuth(from true north)	0	45	90	135	180	225	270	315
Antenna Height AAT (meters)	161.200	138.700	115.200	99.600	89.500	117.700	121.700	113.100
Transmitting ERP (watts)	19.600	120.820	182.880	57.830	6.060	0.430	0.470	0.730

Antenna: 2

Maximum Transmitting ERP in Watts: 140.820

Azimuth(from true north)	0	45	90	135	180	225	270	315
Antenna Height AAT (meters)	161.200	138.700	115.200	99.600	89.500	117.700	121.700	113.100
Transmitting ERP (watts)	0.800	0.430	0.480	7.980	74.500	191.490	102.840	13.560

Antenna: 3

Maximum Transmitting ERP in Watts: 140.820

Azimuth(from true north)	0	45	90	135	180	225	270	315
Antenna Height AAT (meters)	161.200	138.700	115.200	99.600	89.500	117.700	121.700	113.100
Transmitting ERP (watts)	152.110	28.980	2.410	0.430	0.500	2.410	40.010	162.990

Licensee Name: CELLCO PARTNERSHIP

Call Sign: KNKN814 **File Number:** 0009262182 **Print Date:**

Location	Latitude	Longitude	Ground Elevation (meters)	Structure Hgt to Tip (meters)	Antenna Structure Registration No.
25	37-16-37.2 N	085-53-34.8 W	190.0	38.0	

Address: Munfordville Downtown, water tank in the town of

City: Munfordville **County:** HART **State:** KY **Construction Deadline:**

Antenna: 1

Maximum Transmitting ERP in Watts: 140.820

Azimuth(from true north)	0	45	90	135	180	225	270	315
Antenna Height AAT (meters)	29.900	29.900	29.900	29.900	29.900	29.900	29.900	29.900
Transmitting ERP (watts)	63.100	70.030	39.580	9.860	0.660	0.940	8.500	37.380

Antenna: 2

Maximum Transmitting ERP in Watts: 140.820

Azimuth(from true north)	0	45	90	135	180	225	270	315
Antenna Height AAT (meters)	29.900	29.900	29.900	29.900	29.900	29.900	29.900	29.900
Transmitting ERP (watts)	2.430	11.890	72.190	167.790	144.670	35.900	4.030	0.340

Antenna: 3

Maximum Transmitting ERP in Watts: 140.820

Azimuth(from true north)	0	45	90	135	180	225	270	315
Antenna Height AAT (meters)	29.900	29.900	29.900	29.900	29.900	29.900	29.900	29.900
Transmitting ERP (watts)	17.850	1.800	0.480	4.050	25.570	109.870	157.100	105.670

Location	Latitude	Longitude	Ground Elevation (meters)	Structure Hgt to Tip (meters)	Antenna Structure Registration No.
26	36-43-19.8 N	085-57-41.8 W	249.9	35.0	

Address: Fountain Run WT, within the Town of

City: Fountain Run **County:** MONROE **State:** KY **Construction Deadline:**

Antenna: 1

Maximum Transmitting ERP in Watts: 140.820

Azimuth(from true north)	0	45	90	135	180	225	270	315
Antenna Height AAT (meters)	52.200	29.900	29.900	48.100	45.100	49.200	59.500	79.500
Transmitting ERP (watts)	182.210	79.990	9.240	0.460	0.370	0.480	10.610	83.760

Antenna: 2

Maximum Transmitting ERP in Watts: 140.820

Azimuth(from true north)	0	45	90	135	180	225	270	315
Antenna Height AAT (meters)	52.200	29.900	29.900	48.100	45.100	49.200	59.500	79.500
Transmitting ERP (watts)	2.930	27.060	138.120	171.340	47.630	4.290	0.480	0.380

Antenna: 3

Maximum Transmitting ERP in Watts: 140.820

Azimuth(from true north)	0	45	90	135	180	225	270	315
Antenna Height AAT (meters)	52.200	29.900	29.900	48.100	45.100	49.200	59.500	79.500
Transmitting ERP (watts)	0.990	0.260	0.290	1.960	27.370	95.990	74.790	12.850

Licensee Name: CELLCO PARTNERSHIP

Call Sign: KNKN814 **File Number:** 0009262182 **Print Date:**

Location	Latitude	Longitude	Ground Elevation (meters)	Structure Hgt to Tip (meters)	Antenna Structure Registration No.
27	36-38-51.6 N	085-17-33.1 W	320.0	59.4	

Address: Dale Hollow, 2 km SSE of

City: Frogue **County:** CUMBERLAND **State:** KY **Construction Deadline:**

Antenna: 1

Maximum Transmitting ERP in Watts: 140.820

Azimuth(from true north)	0	45	90	135	180	225	270	315
Antenna Height AAT (meters)	113.600	98.300	103.500	120.600	143.900	175.000	143.400	133.400
Transmitting ERP (watts)	142.380	46.500	4.580	0.370	0.300	1.790	16.850	97.650

Antenna: 2

Maximum Transmitting ERP in Watts: 140.820

Azimuth(from true north)	0	45	90	135	180	225	270	315
Antenna Height AAT (meters)	113.600	98.300	103.500	120.600	143.900	175.000	143.400	133.400
Transmitting ERP (watts)	0.260	13.660	49.610	13.050	0.700	0.190	0.190	0.190

Antenna: 3

Maximum Transmitting ERP in Watts: 140.820

Azimuth(from true north)	0	45	90	135	180	225	270	315
Antenna Height AAT (meters)	113.600	98.300	103.500	120.600	143.900	175.000	143.400	133.400
Transmitting ERP (watts)	0.310	0.190	0.190	0.190	0.680	23.200	45.240	7.010

Location	Latitude	Longitude	Ground Elevation (meters)	Structure Hgt to Tip (meters)	Antenna Structure Registration No.
28	37-23-18.7 N	085-45-39.7 W	238.7	77.7	1263443

Address: Jonesville, 3182 Pikeview Road

City: Magnolia **County:** HART **State:** KY **Construction Deadline:**

Antenna: 1

Maximum Transmitting ERP in Watts: 140.820

Azimuth(from true north)	0	45	90	135	180	225	270	315
Antenna Height AAT (meters)	68.600	45.100	99.400	107.600	113.700	79.200	87.100	75.400
Transmitting ERP (watts)	112.340	72.530	10.730	0.730	0.260	0.300	3.390	38.070

Antenna: 2

Maximum Transmitting ERP in Watts: 140.820

Azimuth(from true north)	0	45	90	135	180	225	270	315
Antenna Height AAT (meters)	68.600	45.100	99.400	107.600	113.700	79.200	87.100	75.400
Transmitting ERP (watts)	0.350	9.130	63.170	117.640	43.710	4.900	0.260	0.280

Antenna: 3

Maximum Transmitting ERP in Watts: 140.820

Azimuth(from true north)	0	45	90	135	180	225	270	315
Antenna Height AAT (meters)	68.600	45.100	99.400	107.600	113.700	79.200	87.100	75.400
Transmitting ERP (watts)	2.040	0.260	0.310	0.960	19.520	91.310	100.120	22.420

Licensee Name: CELLCO PARTNERSHIP

Call Sign: KNKN814 **File Number:** 0009262182 **Print Date:**

Location	Latitude	Longitude	Ground Elevation (meters)	Structure Hgt to Tip (meters)	Antenna Structure Registration No.
29	37-07-44.7 N	085-02-39.7 W	324.0	77.7	1257754

Address: Sycamore Flat, 309 Damon Creek Spur Road

City: Russell Springs **County:** RUSSELL **State:** KY **Construction Deadline:**

Antenna: 1

Maximum Transmitting ERP in Watts: 140.820

Azimuth(from true north)	0	45	90	135	180	225	270	315
Antenna Height AAT (meters)	123.600	130.100	81.100	103.900	102.600	103.500	107.800	130.600
Transmitting ERP (watts)	49.220	131.570	80.750	12.800	0.910	0.380	0.430	6.130

Antenna: 2

Maximum Transmitting ERP in Watts: 140.820

Azimuth(from true north)	0	45	90	135	180	225	270	315
Antenna Height AAT (meters)	123.600	130.100	81.100	103.900	102.600	103.500	107.800	130.600
Transmitting ERP (watts)	0.260	0.280	4.180	40.380	104.990	56.880	7.760	0.470

Antenna: 3

Maximum Transmitting ERP in Watts: 140.820

Azimuth(from true north)	0	45	90	135	180	225	270	315
Antenna Height AAT (meters)	123.600	130.100	81.100	103.900	102.600	103.500	107.800	130.600
Transmitting ERP (watts)	28.880	2.760	0.260	0.300	0.630	15.510	83.280	107.290

Location	Latitude	Longitude	Ground Elevation (meters)	Structure Hgt to Tip (meters)	Antenna Structure Registration No.
30	36-40-50.0 N	084-25-12.0 W	429.8	55.0	

Address: Pine Knot WT, 3.7 km NE of

City: Pine Knot **County:** MCCREARY **State:** KY **Construction Deadline:**

Antenna: 1

Maximum Transmitting ERP in Watts: 140.820

Azimuth(from true north)	0	45	90	135	180	225	270	315
Antenna Height AAT (meters)	129.900	144.800	120.800	61.600	48.300	104.400	142.100	119.500
Transmitting ERP (watts)	34.460	120.850	94.160	16.180	1.240	0.330	0.360	2.470

Antenna: 2

Maximum Transmitting ERP in Watts: 140.820

Azimuth(from true north)	0	45	90	135	180	225	270	315
Antenna Height AAT (meters)	129.900	144.800	120.800	61.600	48.300	104.400	142.100	119.500
Transmitting ERP (watts)	0.330	0.370	7.250	61.030	131.990	61.030	7.420	0.400

Antenna: 3

Maximum Transmitting ERP in Watts: 140.820

Azimuth(from true north)	0	45	90	135	180	225	270	315
Antenna Height AAT (meters)	129.900	144.800	120.800	61.600	48.300	104.400	142.100	119.500
Transmitting ERP (watts)	33.670	3.250	0.330	0.350	0.710	16.940	92.010	120.850

Licensee Name: CELLCO PARTNERSHIP

Call Sign: KNKN814 **File Number:** 0009262182 **Print Date:**

Location	Latitude	Longitude	Ground Elevation (meters)	Structure Hgt to Tip (meters)	Antenna Structure Registration No.
31	37-11-40.7 N	085-20-55.2 W	250.5	77.7	1268209

Address: Cane Valley, 1600 Farris Road

City: Columbia **County:** ADAIR **State:** KY **Construction Deadline:**

Antenna: 1

Maximum Transmitting ERP in Watts: 140.820

Azimuth(from true north)	0	45	90	135	180	225	270	315
Antenna Height AAT (meters)	87.700	83.900	79.000	67.800	85.300	97.600	112.100	124.200
Transmitting ERP (watts)	33.690	28.880	6.680	0.500	0.270	0.720	7.520	29.560

Antenna: 2

Maximum Transmitting ERP in Watts: 140.820

Azimuth(from true north)	0	45	90	135	180	225	270	315
Antenna Height AAT (meters)	87.700	83.900	79.000	67.800	85.300	97.600	112.100	124.200
Transmitting ERP (watts)	1.670	19.770	92.360	113.930	32.500	3.360	0.270	0.400

Antenna: 3

Maximum Transmitting ERP in Watts: 140.820

Azimuth(from true north)	0	45	90	135	180	225	270	315
Antenna Height AAT (meters)	87.700	83.900	79.000	67.800	85.300	97.600	112.100	124.200
Transmitting ERP (watts)	1.070	0.280	0.270	3.570	31.280	114.670	85.770	14.800

Location	Latitude	Longitude	Ground Elevation (meters)	Structure Hgt to Tip (meters)	Antenna Structure Registration No.
32	37-18-59.5 N	086-03-19.7 W	277.4	50.0	

Address: Cub Run WT, 1.25 km NNE of

City: Cub Run **County:** HART **State:** KY **Construction Deadline:**

Antenna: 1

Maximum Transmitting ERP in Watts: 140.820

Azimuth(from true north)	0	45	90	135	180	225	270	315
Antenna Height AAT (meters)	120.300	94.100	62.500	94.500	93.900	94.900	119.500	122.500
Transmitting ERP (watts)	148.100	66.150	7.950	0.410	0.330	0.390	8.520	69.270

Antenna: 2

Maximum Transmitting ERP in Watts: 140.820

Azimuth(from true north)	0	45	90	135	180	225	270	315
Antenna Height AAT (meters)	120.300	94.100	62.500	94.500	93.900	94.900	119.500	122.500
Transmitting ERP (watts)	0.800	19.520	104.850	135.070	36.350	3.470	0.330	0.380

Antenna: 3

Maximum Transmitting ERP in Watts: 140.820

Azimuth(from true north)	0	45	90	135	180	225	270	315
Antenna Height AAT (meters)	120.300	94.100	62.500	94.500	93.900	94.900	119.500	122.500
Transmitting ERP (watts)	1.320	0.330	0.390	2.890	38.950	135.070	104.850	17.400

Licensee Name: CELLCO PARTNERSHIP

Call Sign: KNKN814 **File Number:** 0009262182 **Print Date:**

Location	Latitude	Longitude	Ground Elevation (meters)	Structure Hgt to Tip (meters)	Antenna Structure Registration No.
33	36-57-06.3 N	084-49-13.8 W	251.1	91.1	1203422

Address: Conley Bottom, 13.3 km North of

City: Monticello **County:** WAYNE **State:** KY **Construction Deadline:**

Antenna: 1

Maximum Transmitting ERP in Watts: 140.820

Azimuth(from true north)	0	45	90	135	180	225	270	315
Antenna Height AAT (meters)	29.900	48.500	30.900	29.900	29.900	46.300	82.000	44.500
Transmitting ERP (watts)	117.640	52.550	6.320	0.320	0.260	0.310	6.770	55.020

Antenna: 2

Maximum Transmitting ERP in Watts: 140.820

Azimuth(from true north)	0	45	90	135	180	225	270	315
Antenna Height AAT (meters)	29.900	48.500	30.900	29.900	29.900	46.300	82.000	44.500
Transmitting ERP (watts)	2.050	18.640	96.060	119.550	33.460	3.140	0.340	0.270

Antenna: 3

Maximum Transmitting ERP in Watts: 140.820

Azimuth(from true north)	0	45	90	135	180	225	270	315
Antenna Height AAT (meters)	29.900	48.500	30.900	29.900	29.900	46.300	82.000	44.500
Transmitting ERP (watts)	1.050	0.260	0.310	2.290	30.940	107.290	83.280	13.820

Location	Latitude	Longitude	Ground Elevation (meters)	Structure Hgt to Tip (meters)	Antenna Structure Registration No.
34	36-38-23.0 N	085-46-38.0 W	271.3	45.0	

Address: Gamaliel WT, 1.75 km East of

City: Gamaliel **County:** MONROE **State:** KY **Construction Deadline:**

Antenna: 1

Maximum Transmitting ERP in Watts: 140.820

Azimuth(from true north)	0	45	90	135	180	225	270	315
Antenna Height AAT (meters)	45.300	35.300	29.900	36.900	61.400	52.700	77.300	68.100
Transmitting ERP (watts)	263.850	136.600	17.700	1.020	0.540	0.670	11.130	103.240

Antenna: 2

Maximum Transmitting ERP in Watts: 140.820

Azimuth(from true north)	0	45	90	135	180	225	270	315
Antenna Height AAT (meters)	45.300	35.300	29.900	36.900	61.400	52.700	77.300	68.100
Transmitting ERP (watts)	5.290	57.720	173.330	110.860	15.750	1.050	0.370	0.470

Antenna: 3

Maximum Transmitting ERP in Watts: 140.820

Azimuth(from true north)	0	45	90	135	180	225	270	315
Antenna Height AAT (meters)	45.300	35.300	29.900	36.900	61.400	52.700	77.300	68.100
Transmitting ERP (watts)	9.240	0.460	0.370	0.480	10.610	83.760	182.210	79.990

Licensee Name: CELLCO PARTNERSHIP

Call Sign: KNKN814 **File Number:** 0009262182 **Print Date:**

Location	Latitude	Longitude	Ground Elevation (meters)	Structure Hgt to Tip (meters)	Antenna Structure Registration No.
35	36-50-27.1 N	084-28-44.2 W	425.5	79.6	1233359

Address: 165 HWY 90 (KY13162-A)

City: Parkers Lake **County:** MCCREARY **State:** KY **Construction Deadline:**

Antenna: 1

Maximum Transmitting ERP in Watts: 140.820

Azimuth(from true north)	0	45	90	135	180	225	270	315
Antenna Height AAT (meters)	163.500	149.600	145.400	136.000	86.200	163.400	148.700	171.200
Transmitting ERP (watts)	2.890	33.620	100.380	66.750	9.990	0.680	0.260	0.280

Antenna: 2

Maximum Transmitting ERP in Watts: 140.820

Azimuth(from true north)	0	45	90	135	180	225	270	315
Antenna Height AAT (meters)	163.500	149.600	145.400	136.000	86.200	163.400	148.700	171.200
Transmitting ERP (watts)	0.260	0.260	0.330	7.940	56.880	104.990	40.380	4.580

Antenna: 3

Maximum Transmitting ERP in Watts: 140.820

Azimuth(from true north)	0	45	90	135	180	225	270	315
Antenna Height AAT (meters)	163.500	149.600	145.400	136.000	86.200	163.400	148.700	171.200
Transmitting ERP (watts)	20.870	16.620	3.640	0.420	0.450	1.630	14.750	20.590

Location	Latitude	Longitude	Ground Elevation (meters)	Structure Hgt to Tip (meters)	Antenna Structure Registration No.
36	36-59-34.1 N	084-56-03.7 W	291.7	77.7	1259175

Address: Alligator, 15.3 km southeast of

City: Russell Springs **County:** RUSSELL **State:** KY **Construction Deadline:**

Antenna: 1

Maximum Transmitting ERP in Watts: 140.820

Azimuth(from true north)	0	45	90	135	180	225	270	315
Antenna Height AAT (meters)	54.100	59.700	88.000	102.000	98.600	134.200	90.900	67.000
Transmitting ERP (watts)	152.110	67.940	8.170	0.420	0.340	0.400	8.750	71.150

Antenna: 2

Maximum Transmitting ERP in Watts: 140.820

Azimuth(from true north)	0	45	90	135	180	225	270	315
Antenna Height AAT (meters)	54.100	59.700	88.000	102.000	98.600	134.200	90.900	67.000
Transmitting ERP (watts)	0.690	14.430	63.180	78.560	25.130	2.880	0.260	0.340

Antenna: 3

Maximum Transmitting ERP in Watts: 140.820

Azimuth(from true north)	0	45	90	135	180	225	270	315
Antenna Height AAT (meters)	54.100	59.700	88.000	102.000	98.600	134.200	90.900	67.000
Transmitting ERP (watts)	1.140	0.260	0.340	2.400	26.930	78.560	63.180	12.860

Licensee Name: CELLCO PARTNERSHIP

Call Sign: KNKN814 **File Number:** 0009262182 **Print Date:**

Location	Latitude	Longitude	Ground Elevation (meters)	Structure Hgt to Tip (meters)	Antenna Structure Registration No.
37	37-19-35.7 N	085-45-55.6 W	227.1	77.7	1257254

Address: 5553 North Jackson Highway

City: Munfordville **County:** HART **State:** KY **Construction Deadline:**

Antenna: 1

Maximum Transmitting ERP in Watts: 140.820

Azimuth(from true north)	0	45	90	135	180	225	270	315
Antenna Height AAT (meters)	51.400	77.900	102.200	109.800	95.200	105.800	54.500	60.400
Transmitting ERP (watts)	122.700	78.480	11.150	0.740	0.260	0.340	3.750	40.860

Antenna: 2

Maximum Transmitting ERP in Watts: 140.820

Azimuth(from true north)	0	45	90	135	180	225	270	315
Antenna Height AAT (meters)	51.400	77.900	102.200	109.800	95.200	105.800	54.500	60.400
Transmitting ERP (watts)	0.280	0.380	9.920	69.800	128.750	47.020	5.070	0.260

Antenna: 3

Maximum Transmitting ERP in Watts: 140.820

Azimuth(from true north)	0	45	90	135	180	225	270	315
Antenna Height AAT (meters)	51.400	77.900	102.200	109.800	95.200	105.800	54.500	60.400
Transmitting ERP (watts)	6.540	0.320	0.260	0.340	7.510	59.300	128.990	56.630

Location	Latitude	Longitude	Ground Elevation (meters)	Structure Hgt to Tip (meters)	Antenna Structure Registration No.
38	36-47-19.7 N	084-28-52.0 W	407.2	77.7	1258597

Address: Flat Rock, 72 Bryant Mill Road

City: Whitley CIty **County:** MCCREARY **State:** KY **Construction Deadline:**

Antenna: 1

Maximum Transmitting ERP in Watts: 140.820

Azimuth(from true north)	0	45	90	135	180	225	270	315
Antenna Height AAT (meters)	126.900	132.400	146.800	120.400	90.700	160.300	195.600	179.100
Transmitting ERP (watts)	100.380	66.750	9.990	0.680	0.260	0.280	2.890	33.620

Antenna: 2

Maximum Transmitting ERP in Watts: 140.820

Azimuth(from true north)	0	45	90	135	180	225	270	315
Antenna Height AAT (meters)	126.900	132.400	146.800	120.400	90.700	160.300	195.600	179.100
Transmitting ERP (watts)	0.260	0.410	10.460	65.230	100.380	32.860	3.400	0.260

Antenna: 3

Maximum Transmitting ERP in Watts: 140.820

Azimuth(from true north)	0	45	90	135	180	225	270	315
Antenna Height AAT (meters)	126.900	132.400	146.800	120.400	90.700	160.300	195.600	179.100
Transmitting ERP (watts)	5.900	0.320	0.260	0.290	5.760	48.480	104.840	48.480

Licensee Name: CELLCO PARTNERSHIP

Call Sign: KNKN814 **File Number:** 0009262182 **Print Date:**

Location	Latitude	Longitude	Ground Elevation (meters)	Structure Hgt to Tip (meters)	Antenna Structure Registration No.
39	36-53-52.1 N	084-47-02.5 W	353.6	94.2	1238700

Address: Wayne NE, RR 2, Box 9516 (KY13178-A)
City: Monticello **County:** WAYNE **State:** KY **Construction Deadline:**

Antenna: 1
Maximum Transmitting ERP in Watts: 140.820

Azimuth(from true north)	0	45	90	135	180	225	270	315
Antenna Height AAT (meters)	152.800	156.600	111.800	106.100	61.800	118.700	147.100	144.800
Transmitting ERP (watts)	73.090	95.990	26.740	2.580	0.260	0.270	0.570	13.450

Antenna: 2
Maximum Transmitting ERP in Watts: 140.820

Azimuth(from true north)	0	45	90	135	180	225	270	315
Antenna Height AAT (meters)	152.800	156.600	111.800	106.100	61.800	118.700	147.100	144.800
Transmitting ERP (watts)	1.050	0.260	0.310	2.290	30.940	107.290	83.280	13.820

Location	Latitude	Longitude	Ground Elevation (meters)	Structure Hgt to Tip (meters)	Antenna Structure Registration No.
40	36-48-41.0 N	085-07-47.0 W	297.2	91.1	1063507

Address: Grider Hill, in the City of
City: ALBANY **County:** CLINTON **State:** KY **Construction Deadline:**

Antenna: 1
Maximum Transmitting ERP in Watts: 140.820

Azimuth(from true north)	0	45	90	135	180	225	270	315
Antenna Height AAT (meters)	139.900	128.800	89.600	29.900	76.500	89.400	129.500	148.400
Transmitting ERP (watts)	187.140	82.160	9.490	0.470	0.380	0.490	10.890	86.030

Antenna: 2
Maximum Transmitting ERP in Watts: 140.820

Azimuth(from true north)	0	45	90	135	180	225	270	315
Antenna Height AAT (meters)	139.900	128.800	89.600	29.900	76.500	89.400	129.500	148.400
Transmitting ERP (watts)	1.010	24.530	130.970	169.690	43.870	4.120	0.380	0.470

Antenna: 3
Maximum Transmitting ERP in Watts: 140.820

Azimuth(from true north)	0	45	90	135	180	225	270	315
Antenna Height AAT (meters)	139.900	128.800	89.600	29.900	76.500	89.400	129.500	148.400
Transmitting ERP (watts)	1.560	0.380	0.500	3.670	49.220	169.690	130.970	20.880

Location	Latitude	Longitude	Ground Elevation (meters)	Structure Hgt to Tip (meters)	Antenna Structure Registration No.
41	36-50-24.2 N	085-56-34.3 W	236.8	77.7	1267267

Address: Cooktown, 47 Pitcock School Road
City: Austin **County:** BARREN **State:** KY **Construction Deadline:**

Antenna: 1
Maximum Transmitting ERP in Watts: 140.820

Azimuth(from true north)	0	45	90	135	180	225	270	315
Antenna Height AAT (meters)	102.100	83.800	69.100	67.600	75.700	91.300	106.100	110.000
Transmitting ERP (watts)	44.890	155.660	120.830	20.050	1.520	0.380	0.450	3.330

Licensee Name: CELLCO PARTNERSHIP

Call Sign: KNKN814 **File Number:** 0009262182 **Print Date:**

Location	Latitude	Longitude	Ground Elevation (meters)	Structure Hgt to Tip (meters)	Antenna Structure Registration No.
41	36-50-24.2 N	085-56-34.3 W	236.8	77.7	1267267

Address: Cooktown, 47 Pitcock School Road

City: Austin **County:** BARREN **State:** KY **Construction Deadline:**

Antenna: 2

Maximum Transmitting ERP in Watts: 140.820

Azimuth(from true north)	0	45	90	135	180	225	270	315
Antenna Height AAT (meters)	102.100	83.800	69.100	67.600	75.700	91.300	106.100	110.000
Transmitting ERP (watts)	0.260	0.310	6.770	55.020	117.640	52.550	6.320	0.320

Antenna: 3

Maximum Transmitting ERP in Watts: 140.820

Azimuth(from true north)	0	45	90	135	180	225	270	315
Antenna Height AAT (meters)	102.100	83.800	69.100	67.600	75.700	91.300	106.100	110.000
Transmitting ERP (watts)	28.880	2.760	0.260	0.300	0.630	15.510	83.280	107.290

Location	Latitude	Longitude	Ground Elevation (meters)	Structure Hgt to Tip (meters)	Antenna Structure Registration No.
42	37-05-29.1 N	085-36-52.2 W	242.9	77.7	1266731

Address: Sulphur Well, 9037 Greensburg Road

City: Edmonton **County:** METCALFE **State:** KY **Construction Deadline:**

Antenna: 1

Maximum Transmitting ERP in Watts: 140.820

Azimuth(from true north)	0	45	90	135	180	225	270	315
Antenna Height AAT (meters)	88.600	85.300	71.200	80.200	58.000	51.600	79.800	80.200
Transmitting ERP (watts)	59.300	128.990	56.630	6.540	0.320	0.260	0.340	7.510

Antenna: 2

Maximum Transmitting ERP in Watts: 140.820

Azimuth(from true north)	0	45	90	135	180	225	270	315
Antenna Height AAT (meters)	88.600	85.300	71.200	80.200	58.000	51.600	79.800	80.200
Transmitting ERP (watts)	0.280	0.380	9.920	69.800	128.750	47.020	5.070	0.260

Antenna: 3

Maximum Transmitting ERP in Watts: 140.820

Azimuth(from true north)	0	45	90	135	180	225	270	315
Antenna Height AAT (meters)	88.600	85.300	71.200	80.200	58.000	51.600	79.800	80.200
Transmitting ERP (watts)	18.570	1.520	0.260	0.340	1.630	26.900	108.950	99.160

Location	Latitude	Longitude	Ground Elevation (meters)	Structure Hgt to Tip (meters)	Antenna Structure Registration No.
43	37-13-36.2 N	085-48-48.7 W	214.6	77.7	1257256

Address: Bunnell Crossing, 2485 South Jackson Highway

City: Horse Cave **County:** HART **State:** KY **Construction Deadline:**

Antenna: 1

Maximum Transmitting ERP in Watts: 140.820

Azimuth(from true north)	0	45	90	135	180	225	270	315
Antenna Height AAT (meters)	68.900	94.700	77.500	69.300	79.200	71.800	80.500	77.900
Transmitting ERP (watts)	69.800	128.750	47.020	5.070	0.260	0.280	0.380	9.920

Licensee Name: CELLCO PARTNERSHIP

Call Sign: KNKN814 **File Number:** 0009262182 **Print Date:**

Location	Latitude	Longitude	Ground Elevation (meters)	Structure Hgt to Tip (meters)	Antenna Structure Registration No.
43	37-13-36.2 N	085-48-48.7 W	214.6	77.7	1257256

Address: Bunnell Crossing, 2485 South Jackson Highway

City: Horse Cave **County:** HART **State:** KY **Construction Deadline:**

Antenna: 2

Maximum Transmitting ERP in Watts: 140.820

Azimuth(from true north)	0	45	90	135	180	225	270	315
Antenna Height AAT (meters)	68.900	94.700	77.500	69.300	79.200	71.800	80.500	77.900
Transmitting ERP (watts)	0.260	0.340	3.750	40.860	122.700	78.480	11.150	0.740

Antenna: 3

Maximum Transmitting ERP in Watts: 140.820

Azimuth(from true north)	0	45	90	135	180	225	270	315
Antenna Height AAT (meters)	68.900	94.700	77.500	69.300	79.200	71.800	80.500	77.900
Transmitting ERP (watts)	23.430	2.100	0.260	0.330	1.050	21.320	101.470	108.950

Location	Latitude	Longitude	Ground Elevation (meters)	Structure Hgt to Tip (meters)	Antenna Structure Registration No.
44	36-45-08.2 N	085-46-41.1 W	307.2	77.7	1263385

Address: Cedar Flats, 5612 Old Glasgow Road

City: Tompkinsville **County:** MONROE **State:** KY **Construction Deadline:**

Antenna: 1

Maximum Transmitting ERP in Watts: 140.820

Azimuth(from true north)	0	45	90	135	180	225	270	315
Antenna Height AAT (meters)	127.400	99.600	106.800	108.800	139.200	126.700	120.300	112.600
Transmitting ERP (watts)	106.060	51.260	7.470	0.440	0.270	0.880	9.090	54.930

Antenna: 2

Maximum Transmitting ERP in Watts: 140.820

Azimuth(from true north)	0	45	90	135	180	225	270	315
Antenna Height AAT (meters)	127.400	99.600	106.800	108.800	139.200	126.700	120.300	112.600
Transmitting ERP (watts)	2.230	17.650	79.600	97.130	30.270	3.270	0.390	0.270

Antenna: 3

Maximum Transmitting ERP in Watts: 140.820

Azimuth(from true north)	0	45	90	135	180	225	270	315
Antenna Height AAT (meters)	127.400	99.600	106.800	108.800	139.200	126.700	120.300	112.600
Transmitting ERP (watts)	1.220	0.420	0.270	4.470	33.110	100.320	76.550	15.620

Location	Latitude	Longitude	Ground Elevation (meters)	Structure Hgt to Tip (meters)	Antenna Structure Registration No.
45	37-14-29.3 N	085-11-59.5 W	262.4	77.7	1274206

Address: Knifely, Tucker Warren Road

City: Knifley **County:** ADAIR **State:** KY **Construction Deadline:**

Antenna: 1

Maximum Transmitting ERP in Watts: 140.820

Azimuth(from true north)	0	45	90	135	180	225	270	315
Antenna Height AAT (meters)	68.500	61.000	48.800	63.400	69.100	84.500	114.900	92.200
Transmitting ERP (watts)	114.480	130.660	49.070	6.770	0.450	0.620	5.460	32.920

Licensee Name: CELLCO PARTNERSHIP

Call Sign: KNKN814 **File Number:** 0009262182 **Print Date:**

Location	Latitude	Longitude	Ground Elevation (meters)	Structure Hgt to Tip (meters)	Antenna Structure Registration No.
45	37-14-29.3 N	085-11-59.5 W	262.4	77.7	1274206

Address: Knifely, Tucker Warren Road

City: Knifley **County:** ADAIR **State:** KY **Construction Deadline:**

Antenna: 2

Maximum Transmitting ERP in Watts: 140.820

Azimuth(from true north)	0	45	90	135	180	225	270	315
Antenna Height AAT (meters)	68.500	61.000	48.800	63.400	69.100	84.500	114.900	92.200
Transmitting ERP (watts)	5.460	32.920	114.480	130.660	49.070	6.770	0.450	0.620

Antenna: 3

Maximum Transmitting ERP in Watts: 140.820

Azimuth(from true north)	0	45	90	135	180	225	270	315
Antenna Height AAT (meters)	68.500	61.000	48.800	63.400	69.100	84.500	114.900	92.200
Transmitting ERP (watts)	0.890	0.350	3.940	22.290	94.500	128.360	70.660	11.140

Location	Latitude	Longitude	Ground Elevation (meters)	Structure Hgt to Tip (meters)	Antenna Structure Registration No.
46	37-05-19.7 N	084-54-47.3 W	331.6	106.3	1232264

Address: Font Hill, 1101 Pine Top Road

City: RUSSELL SPRINGS **County:** RUSSELL **State:** KY **Construction Deadline:**

Antenna: 1

Maximum Transmitting ERP in Watts: 140.820

Azimuth(from true north)	0	45	90	135	180	225	270	315
Antenna Height AAT (meters)	94.800	38.800	79.400	108.300	120.800	98.900	92.100	104.300
Transmitting ERP (watts)	130.640	34.360	1.400	0.270	0.270	0.270	0.700	35.980

Antenna: 3

Maximum Transmitting ERP in Watts: 140.820

Azimuth(from true north)	0	45	90	135	180	225	270	315
Antenna Height AAT (meters)	94.800	38.800	79.400	108.300	120.800	98.900	92.100	104.300
Transmitting ERP (watts)	10.130	0.720	0.520	5.460	30.020	118.460	146.650	67.150

Antenna: 4

Maximum Transmitting ERP in Watts: 140.820

Azimuth(from true north)	0	45	90	135	180	225	270	315
Antenna Height AAT (meters)	94.800	38.800	79.400	108.300	120.800	98.900	92.100	104.300
Transmitting ERP (watts)	0.270	0.270	0.700	35.980	130.640	34.360	1.400	0.270

Location	Latitude	Longitude	Ground Elevation (meters)	Structure Hgt to Tip (meters)	Antenna Structure Registration No.
47	36-58-11.8 N	085-26-00.6 W	343.8	77.7	1261657

Address: Sparksville, 330 Fire Dept Lane

City: Breeding **County:** ADAIR **State:** KY **Construction Deadline:**

Antenna: 1

Maximum Transmitting ERP in Watts: 140.820

Azimuth(from true north)	0	45	90	135	180	225	270	315
Antenna Height AAT (meters)	174.500	151.700	149.500	180.100	175.600	143.900	152.100	163.400
Transmitting ERP (watts)	63.170	117.640	43.710	4.900	0.260	0.280	0.350	9.130

Licensee Name: CELLCO PARTNERSHIP

Call Sign: KNKN814 **File Number:** 0009262182 **Print Date:**

Location	Latitude	Longitude	Ground Elevation (meters)	Structure Hgt to Tip (meters)	Antenna Structure Registration No.
47	36-58-11.8 N	085-26-00.6 W	343.8	77.7	1261657

Address: Sparksville, 330 Fire Dept Lane

City: Breeding **County:** ADAIR **State:** KY **Construction Deadline:**

Antenna: 2

Maximum Transmitting ERP in Watts: 140.820

Azimuth(from true north)	0	45	90	135	180	225	270	315
Antenna Height AAT (meters)	174.500	151.700	149.500	180.100	175.600	143.900	152.100	163.400
Transmitting ERP (watts)	0.310	0.960	19.520	91.310	100.120	22.420	2.040	0.260

Antenna: 3

Maximum Transmitting ERP in Watts: 140.820

Azimuth(from true north)	0	45	90	135	180	225	270	315
Antenna Height AAT (meters)	174.500	151.700	149.500	180.100	175.600	143.900	152.100	163.400
Transmitting ERP (watts)	6.320	0.320	0.260	0.310	6.770	55.020	117.640	52.550

Location	Latitude	Longitude	Ground Elevation (meters)	Structure Hgt to Tip (meters)	Antenna Structure Registration No.
48	37-07-03.1 N	085-52-50.8 W	232.0	77.7	1250179

Address: Barren North, 645 Jack Turner Road

City: Cave City **County:** BARREN **State:** KY **Construction Deadline:**

Antenna: 1

Maximum Transmitting ERP in Watts: 140.820

Azimuth(from true north)	0	45	90	135	180	225	270	315
Antenna Height AAT (meters)	88.600	97.500	78.800	56.400	66.700	81.000	89.000	73.900
Transmitting ERP (watts)	55.020	117.640	52.550	6.320	0.320	0.260	0.310	6.770

Antenna: 2

Maximum Transmitting ERP in Watts: 140.820

Azimuth(from true north)	0	45	90	135	180	225	270	315
Antenna Height AAT (meters)	88.600	97.500	78.800	56.400	66.700	81.000	89.000	73.900
Transmitting ERP (watts)	0.260	0.300	3.390	38.070	112.340	72.530	10.730	0.730

Antenna: 3

Maximum Transmitting ERP in Watts: 140.820

Azimuth(from true north)	0	45	90	135	180	225	270	315
Antenna Height AAT (meters)	88.600	97.500	78.800	56.400	66.700	81.000	89.000	73.900
Transmitting ERP (watts)	44.460	8.510	0.650	0.280	0.460	6.050	35.340	67.700

Location	Latitude	Longitude	Ground Elevation (meters)	Structure Hgt to Tip (meters)	Antenna Structure Registration No.
49	37-12-16.2 N	085-44-03.5 W	214.9	77.7	1263048

Address: Pascal, 2510 Hundred Acre Pond Road

City: Hardyville **County:** HART **State:** KY **Construction Deadline:**

Antenna: 1

Maximum Transmitting ERP in Watts: 140.820

Azimuth(from true north)	0	45	90	135	180	225	270	315
Antenna Height AAT (meters)	97.900	96.700	73.200	62.000	53.400	78.500	81.200	83.500
Transmitting ERP (watts)	101.470	108.950	23.430	2.100	0.260	0.330	1.050	21.320

Licensee Name: CELLCO PARTNERSHIP

Call Sign: KNKN814 **File Number:** 0009262182 **Print Date:**

Location	Latitude	Longitude	Ground Elevation (meters)	Structure Hgt to Tip (meters)	Antenna Structure Registration No.
49	37-12-16.2 N	085-44-03.5 W	214.9	77.7	1263048

Address: Pascal, 2510 Hundred Acre Pond Road
City: Hardyville **County:** HART **State:** KY **Construction Deadline:**

Antenna: 2
Maximum Transmitting ERP in Watts: 140.820

Azimuth(from true north)	0	45	90	135	180	225	270	315
Antenna Height AAT (meters)	97.900	96.700	73.200	62.000	53.400	78.500	81.200	83.500
Transmitting ERP (watts)	0.340	7.510	59.300	128.990	56.630	6.540	0.320	0.260

Antenna: 3
Maximum Transmitting ERP in Watts: 140.820

Azimuth(from true north)	0	45	90	135	180	225	270	315
Antenna Height AAT (meters)	97.900	96.700	73.200	62.000	53.400	78.500	81.200	83.500
Transmitting ERP (watts)	1.520	0.260	0.340	1.630	26.900	108.950	99.160	18.570

Location	Latitude	Longitude	Ground Elevation (meters)	Structure Hgt to Tip (meters)	Antenna Structure Registration No.
50	37-03-12.3 N	085-22-03.7 W	261.2	49.1	

Address: Flatwood, 1850 Bliss Road
City: Columbia **County:** ADAIR **State:** KY **Construction Deadline:**

Antenna: 1
Maximum Transmitting ERP in Watts: 140.820

Azimuth(from true north)	0	45	90	135	180	225	270	315
Antenna Height AAT (meters)	78.200	61.100	61.900	52.600	38.500	29.900	48.000	88.900
Transmitting ERP (watts)	183.340	121.920	18.240	1.250	0.480	0.510	5.290	61.410

Antenna: 2
Maximum Transmitting ERP in Watts: 140.820

Azimuth(from true north)	0	45	90	135	180	225	270	315
Antenna Height AAT (meters)	78.200	61.100	61.900	52.600	38.500	29.900	48.000	88.900
Transmitting ERP (watts)	3.440	31.560	132.880	120.360	23.780	1.930	0.370	0.340

Antenna: 3
Maximum Transmitting ERP in Watts: 140.820

Azimuth(from true north)	0	45	90	135	180	225	270	315
Antenna Height AAT (meters)	78.200	61.100	61.900	52.600	38.500	29.900	48.000	88.900
Transmitting ERP (watts)	0.330	0.380	0.800	19.520	104.850	135.070	36.350	3.470

Location	Latitude	Longitude	Ground Elevation (meters)	Structure Hgt to Tip (meters)	Antenna Structure Registration No.
51	36-45-53.9 N	085-18-31.2 W	198.1	77.7	1257755

Address: Bear Creek, 4888 Albany Road
City: Burkesville **County:** CUMBERLAND **State:** KY **Construction Deadline:**

Antenna: 1
Maximum Transmitting ERP in Watts: 140.820

Azimuth(from true north)	0	45	90	135	180	225	270	315
Antenna Height AAT (meters)	54.100	35.900	29.900	29.900	29.900	29.900	82.300	58.000
Transmitting ERP (watts)	9.130	63.170	117.640	43.710	4.900	0.260	0.280	0.350

Licensee Name: CELLCO PARTNERSHIP

Call Sign: KNKN814 **File Number:** 0009262182 **Print Date:**

Location	Latitude	Longitude	Ground Elevation (meters)	Structure Hgt to Tip (meters)	Antenna Structure Registration No.
51	36-45-53.9 N	085-18-31.2 W	198.1	77.7	1257755

Address: Bear Creek, 4888 Albany Road
City: Burkesville **County:** CUMBERLAND **State:** KY **Construction Deadline:**

Antenna: 2
Maximum Transmitting ERP in Watts: 140.820

Azimuth(from true north)	0	45	90	135	180	225	270	315
Antenna Height AAT (meters)	54.100	35.900	29.900	29.900	29.900	29.900	82.300	58.000
Transmitting ERP (watts)	0.250	0.530	4.420	61.030	116.290	16.050	0.380	0.570

Antenna: 3
Maximum Transmitting ERP in Watts: 140.820

Azimuth(from true north)	0	45	90	135	180	225	270	315
Antenna Height AAT (meters)	54.100	35.900	29.900	29.900	29.900	29.900	82.300	58.000
Transmitting ERP (watts)	2.040	0.260	0.310	0.960	19.520	91.310	100.120	22.420

Location	Latitude	Longitude	Ground Elevation (meters)	Structure Hgt to Tip (meters)	Antenna Structure Registration No.
52	36-42-44.7 N	085-21-54.1 W	278.3	77.7	1275245

Address: Burkesville II, Clover Creek Drive
City: Burkesville **County:** CUMBERLAND **State:** KY **Construction Deadline:**

Antenna: 1
Maximum Transmitting ERP in Watts: 140.820

Azimuth(from true north)	0	45	90	135	180	225	270	315
Antenna Height AAT (meters)	159.000	107.500	71.900	97.500	110.200	122.500	135.900	132.300
Transmitting ERP (watts)	11.530	61.810	130.990	103.880	21.640	2.140	0.270	1.490

Antenna: 2
Maximum Transmitting ERP in Watts: 140.820

Azimuth(from true north)	0	45	90	135	180	225	270	315
Antenna Height AAT (meters)	159.000	107.500	71.900	97.500	110.200	122.500	135.900	132.300
Transmitting ERP (watts)	0.640	0.460	4.860	26.750	105.570	130.690	59.850	9.030

Antenna: 3
Maximum Transmitting ERP in Watts: 140.820

Azimuth(from true north)	0	45	90	135	180	225	270	315
Antenna Height AAT (meters)	159.000	107.500	71.900	97.500	110.200	122.500	135.900	132.300
Transmitting ERP (watts)	130.690	59.850	9.030	0.640	0.460	4.860	26.750	105.570

Location	Latitude	Longitude	Ground Elevation (meters)	Structure Hgt to Tip (meters)	Antenna Structure Registration No.
53	36-46-19.7 N	084-57-43.8 W	320.0	60.7	

Address: Zula, Route 4 Box 330A
City: Monticello **County:** WAYNE **State:** KY **Construction Deadline:**

Antenna: 1
Maximum Transmitting ERP in Watts: 140.820

Azimuth(from true north)	0	45	90	135	180	225	270	315
Antenna Height AAT (meters)	98.300	79.400	64.000	29.900	47.800	39.400	81.000	143.200
Transmitting ERP (watts)	80.300	122.700	38.140	3.840	0.260	0.300	0.480	13.100

Licensee Name: CELLCO PARTNERSHIP

Call Sign: KNKN814 **File Number:** 0009262182 **Print Date:**

Location	Latitude	Longitude	Ground Elevation (meters)	Structure Hgt to Tip (meters)	Antenna Structure Registration No.
53	36-46-19.7 N	084-57-43.8 W	320.0	60.7	

Address: Zula, Route 4 Box 330A
City: Monticello **County:** WAYNE **State:** KY **Construction Deadline:**

Antenna: 2
Maximum Transmitting ERP in Watts: 140.820

Azimuth(from true north)	0	45	90	135	180	225	270	315
Antenna Height AAT (meters)	98.300	79.400	64.000	29.900	47.800	39.400	81.000	143.200
Transmitting ERP (watts)	0.340	3.750	40.860	122.700	78.480	11.150	0.740	0.260

Antenna: 3
Maximum Transmitting ERP in Watts: 140.820

Azimuth(from true north)	0	45	90	135	180	225	270	315
Antenna Height AAT (meters)	98.300	79.400	64.000	29.900	47.800	39.400	81.000	143.200
Transmitting ERP (watts)	2.840	0.260	0.330	0.690	16.910	90.270	116.960	30.240

Location	Latitude	Longitude	Ground Elevation (meters)	Structure Hgt to Tip (meters)	Antenna Structure Registration No.
54	36-44-16.2 N	085-39-31.8 W	316.4	45.1	1273499

Address: Tompkinsville II, 182 Tom Ford Road
City: Tompkinsville **County:** MONROE **State:** KY **Construction Deadline:**

Antenna: 1
Maximum Transmitting ERP in Watts: 140.820

Azimuth(from true north)	0	45	90	135	180	225	270	315
Antenna Height AAT (meters)	52.700	96.000	157.600	122.400	67.800	99.700	86.100	98.800
Transmitting ERP (watts)	157.100	105.670	17.850	1.800	0.480	4.050	25.570	109.870

Antenna: 2
Maximum Transmitting ERP in Watts: 140.820

Azimuth(from true north)	0	45	90	135	180	225	270	315
Antenna Height AAT (meters)	52.700	96.000	157.600	122.400	67.800	99.700	86.100	98.800
Transmitting ERP (watts)	7.940	44.270	150.440	165.870	63.900	9.040	0.700	1.050

Antenna: 3
Maximum Transmitting ERP in Watts: 140.820

Azimuth(from true north)	0	45	90	135	180	225	270	315
Antenna Height AAT (meters)	52.700	96.000	157.600	122.400	67.800	99.700	86.100	98.800
Transmitting ERP (watts)	4.030	0.340	2.430	11.890	72.190	167.790	144.670	35.900

Location	Latitude	Longitude	Ground Elevation (meters)	Structure Hgt to Tip (meters)	Antenna Structure Registration No.
55	37-06-16.0 N	085-26-55.1 W	242.0	77.7	1272696

Address: Milltown, 294 Ben Smith Road
City: Columbia **County:** ADAIR **State:** KY **Construction Deadline:**

Antenna: 1
Maximum Transmitting ERP in Watts: 140.820

Azimuth(from true north)	0	45	90	135	180	225	270	315
Antenna Height AAT (meters)	95.100	80.000	94.100	60.700	39.400	50.000	64.200	80.400
Transmitting ERP (watts)	124.610	82.100	13.580	1.250	0.280	2.730	18.240	82.650

Licensee Name: CELLCO PARTNERSHIP

Call Sign: KNKN814 **File Number:** 0009262182 **Print Date:**

Location	Latitude	Longitude	Ground Elevation (meters)	Structure Hgt to Tip (meters)	Antenna Structure Registration No.
55	37-06-16.0 N	085-26-55.1 W	242.0	77.7	1272696

Address: Milltown, 294 Ben Smith Road

City: Columbia **County:** ADAIR **State:** KY **Construction Deadline:**

Antenna: 2

Maximum Transmitting ERP in Watts: 140.820

Azimuth(from true north)	0	45	90	135	180	225	270	315
Antenna Height AAT (meters)	95.100	80.000	94.100	60.700	39.400	50.000	64.200	80.400
Transmitting ERP (watts)	5.460	32.920	114.480	130.660	49.070	6.770	0.450	0.620

Antenna: 4

Maximum Transmitting ERP in Watts: 140.820

Azimuth(from true north)	0	45	90	135	180	225	270	315
Antenna Height AAT (meters)	95.100	80.000	94.100	60.700	39.400	50.000	64.200	80.400
Transmitting ERP (watts)	2.950	0.270	1.500	8.200	53.810	130.660	112.910	27.380

Location	Latitude	Longitude	Ground Elevation (meters)	Structure Hgt to Tip (meters)	Antenna Structure Registration No.
56	36-49-54.0 N	085-30-26.8 W	259.7	77.4	1263396

Address: Marrowbone, 9970 Glasgow Road (KY 11775-A)

City: Burkesville **County:** CUMBERLAND **State:** KY **Construction Deadline:**

Antenna: 1

Maximum Transmitting ERP in Watts: 140.820

Azimuth(from true north)	0	45	90	135	180	225	270	315
Antenna Height AAT (meters)	57.500	59.800	109.700	100.500	118.200	69.900	45.800	67.300
Transmitting ERP (watts)	107.290	83.280	13.820	1.050	0.260	0.310	2.290	30.940

Antenna: 2

Maximum Transmitting ERP in Watts: 140.820

Azimuth(from true north)	0	45	90	135	180	225	270	315
Antenna Height AAT (meters)	57.500	59.800	109.700	100.500	118.200	69.900	45.800	67.300
Transmitting ERP (watts)	0.630	15.510	83.280	107.290	28.880	2.760	0.260	0.300

Antenna: 3

Maximum Transmitting ERP in Watts: 140.820

Azimuth(from true north)	0	45	90	135	180	225	270	315
Antenna Height AAT (meters)	57.500	59.800	109.700	100.500	118.200	69.900	45.800	67.300
Transmitting ERP (watts)	6.320	0.320	0.260	0.310	6.770	55.020	117.640	52.550

Location	Latitude	Longitude	Ground Elevation (meters)	Structure Hgt to Tip (meters)	Antenna Structure Registration No.
57	36-49-02.3 N	084-54-11.6 W	308.8	67.1	1256099

Address: Monticello West, 3.2 km west of

City: Monticello **County:** WAYNE **State:** KY **Construction Deadline:**

Antenna: 1

Maximum Transmitting ERP in Watts: 140.820

Azimuth(from true north)	0	45	90	135	180	225	270	315
Antenna Height AAT (meters)	100.700	71.600	33.000	29.900	29.900	44.700	87.700	110.900
Transmitting ERP (watts)	13.100	80.300	122.700	38.140	3.840	0.260	0.300	0.480

Licensee Name: CELLCO PARTNERSHIP

Call Sign: KNKN814 **File Number:** 0009262182 **Print Date:**

Location	Latitude	Longitude	Ground Elevation (meters)	Structure Hgt to Tip (meters)	Antenna Structure Registration No.
57	36-49-02.3 N	084-54-11.6 W	308.8	67.1	1256099

Address: Monticello West, 3.2 km west of
City: Monticello **County:** WAYNE **State:** KY **Construction Deadline:**

Antenna: 2
Maximum Transmitting ERP in Watts: 140.820

Azimuth(from true north)	0	45	90	135	180	225	270	315
Antenna Height AAT (meters)	100.700	71.600	33.000	29.900	29.900	44.700	87.700	110.900
Transmitting ERP (watts)	0.260	0.280	0.380	9.920	69.800	128.750	47.020	5.070

Antenna: 3
Maximum Transmitting ERP in Watts: 140.820

Azimuth(from true north)	0	45	90	135	180	225	270	315
Antenna Height AAT (meters)	100.700	71.600	33.000	29.900	29.900	44.700	87.700	110.900
Transmitting ERP (watts)	73.680	13.650	1.130	0.260	0.370	2.600	30.680	93.270

Location	Latitude	Longitude	Ground Elevation (meters)	Structure Hgt to Tip (meters)	Antenna Structure Registration No.
58	37-21-53.4 N	085-59-06.7 W	224.3	77.7	1279268

Address: Priceville, 6465 Raider Hollow Road
City: Munfordville **County:** HART **State:** KY **Construction Deadline:**

Antenna: 1
Maximum Transmitting ERP in Watts: 140.820

Azimuth(from true north)	0	45	90	135	180	225	270	315
Antenna Height AAT (meters)	86.300	57.200	63.000	84.200	63.900	76.100	93.500	93.100
Transmitting ERP (watts)	122.420	126.750	40.620	4.930	0.330	0.900	5.470	39.870

Antenna: 2
Maximum Transmitting ERP in Watts: 140.820

Azimuth(from true north)	0	45	90	135	180	225	270	315
Antenna Height AAT (meters)	86.300	57.200	63.000	84.200	63.900	76.100	93.500	93.100
Transmitting ERP (watts)	1.490	11.530	61.810	130.990	103.880	21.640	2.140	0.270

Antenna: 3
Maximum Transmitting ERP in Watts: 140.820

Azimuth(from true north)	0	45	90	135	180	225	270	315
Antenna Height AAT (meters)	86.300	57.200	63.000	84.200	63.900	76.100	93.500	93.100
Transmitting ERP (watts)	11.140	0.890	0.350	3.940	22.290	94.500	128.360	70.660

Location	Latitude	Longitude	Ground Elevation (meters)	Structure Hgt to Tip (meters)	Antenna Structure Registration No.
59	36-55-11.8 N	085-46-09.4 W	281.6	60.7	

Address: 640 Spears Road
City: Eighty Eight **County:** BARREN **State:** KY **Construction Deadline:**

Antenna: 1
Maximum Transmitting ERP in Watts: 140.820

Azimuth(from true north)	0	45	90	135	180	225	270	315
Antenna Height AAT (meters)	73.700	80.500	60.000	52.300	80.600	106.300	140.000	84.000
Transmitting ERP (watts)	83.280	107.290	28.880	2.760	0.260	0.300	0.630	15.510

Licensee Name: CELLCO PARTNERSHIP

Call Sign: KNKN814 **File Number:** 0009262182 **Print Date:**

Location	Latitude	Longitude	Ground Elevation (meters)	Structure Hgt to Tip (meters)	Antenna Structure Registration No.
59	36-55-11.8 N	085-46-09.4 W	281.6	60.7	

Address: 640 Spears Road
City: Eighty Eight **County:** BARREN **State:** KY **Construction Deadline:**

Antenna: 2
Maximum Transmitting ERP in Watts: 140.820

Azimuth(from true north)	0	45	90	135	180	225	270	315
Antenna Height AAT (meters)	73.700	80.500	60.000	52.300	80.600	106.300	140.000	84.000
Transmitting ERP (watts)	0.300	4.900	45.770	117.640	63.170	8.330	0.490	0.260

Antenna: 3
Maximum Transmitting ERP in Watts: 140.820

Azimuth(from true north)	0	45	90	135	180	225	270	315
Antenna Height AAT (meters)	73.700	80.500	60.000	52.300	80.600	106.300	140.000	84.000
Transmitting ERP (watts)	10.730	0.730	0.260	0.300	3.390	38.070	112.340	72.530

Location	Latitude	Longitude	Ground Elevation (meters)	Structure Hgt to Tip (meters)	Antenna Structure Registration No.
60	36-47-29.1 N	085-41-06.2 W	304.8	77.7	1258492

Address: Monroe North, 2543 John Eaton Road
City: Tompkinsville **County:** MONROE **State:** KY **Construction Deadline:**

Antenna: 1
Maximum Transmitting ERP in Watts: 140.820

Azimuth(from true north)	0	45	90	135	180	225	270	315
Antenna Height AAT (meters)	74.500	125.700	119.500	131.700	96.800	116.700	93.400	125.200
Transmitting ERP (watts)	112.340	72.530	10.730	0.730	0.260	0.300	3.390	38.070

Antenna: 2
Maximum Transmitting ERP in Watts: 140.820

Azimuth(from true north)	0	45	90	135	180	225	270	315
Antenna Height AAT (meters)	74.500	125.700	119.500	131.700	96.800	116.700	93.400	125.200
Transmitting ERP (watts)	0.290	0.450	12.040	74.220	112.340	35.530	3.720	0.260

Antenna: 3
Maximum Transmitting ERP in Watts: 140.820

Azimuth(from true north)	0	45	90	135	180	225	270	315
Antenna Height AAT (meters)	74.500	125.700	119.500	131.700	96.800	116.700	93.400	125.200
Transmitting ERP (watts)	6.320	0.320	0.260	0.310	6.770	55.020	117.640	52.550

Location	Latitude	Longitude	Ground Elevation (meters)	Structure Hgt to Tip (meters)	Antenna Structure Registration No.
61	36-53-03.2 N	085-06-05.4 W	287.7	77.7	1254846

Address: Lake Cumberland Dam, 3.2 km south of
City: Freedom **County:** RUSSELL **State:** KY **Construction Deadline:**

Antenna: 1
Maximum Transmitting ERP in Watts: 140.820

Azimuth(from true north)	0	45	90	135	180	225	270	315
Antenna Height AAT (meters)	74.300	122.800	93.300	119.500	87.000	111.600	154.900	86.500
Transmitting ERP (watts)	170.670	76.240	9.170	0.470	0.380	0.450	9.820	79.830

Licensee Name: CELLCO PARTNERSHIP

Call Sign: KNKN814 **File Number:** 0009262182 **Print Date:**

Location	Latitude	Longitude	Ground Elevation (meters)	Structure Hgt to Tip (meters)	Antenna Structure Registration No.
61	36-53-03.2 N	085-06-05.4 W	287.7	77.7	1254846

Address: Lake Cumberland Dam, 3.2 km south of
City: Freedom **County:** RUSSELL **State:** KY **Construction Deadline:**

Antenna: 2
Maximum Transmitting ERP in Watts: 140.820

Azimuth(from true north)	0	45	90	135	180	225	270	315
Antenna Height AAT (meters)	74.300	122.800	93.300	119.500	87.000	111.600	154.900	86.500
Transmitting ERP (watts)	0.920	22.500	120.830	155.660	41.900	4.000	0.380	0.440

Antenna: 3
Maximum Transmitting ERP in Watts: 140.820

Azimuth(from true north)	0	45	90	135	180	225	270	315
Antenna Height AAT (meters)	74.300	122.800	93.300	119.500	87.000	111.600	154.900	86.500
Transmitting ERP (watts)	1.520	0.380	0.450	3.330	44.890	155.660	120.830	20.050

Location	Latitude	Longitude	Ground Elevation (meters)	Structure Hgt to Tip (meters)	Antenna Structure Registration No.
62	36-45-30.5 N	085-12-09.6 W	306.6	77.7	1258453

Address: Ida, Route 5, Box 473AA
City: Albany **County:** CLINTON **State:** KY **Construction Deadline:**

Antenna: 1
Maximum Transmitting ERP in Watts: 140.820

Azimuth(from true north)	0	45	90	135	180	225	270	315
Antenna Height AAT (meters)	153.900	117.200	66.500	76.800	116.300	109.600	166.800	149.300
Transmitting ERP (watts)	78.620	88.210	8.620	0.340	0.240	0.240	0.240	4.520

Antenna: 2
Maximum Transmitting ERP in Watts: 140.820

Azimuth(from true north)	0	45	90	135	180	225	270	315
Antenna Height AAT (meters)	153.900	117.200	66.500	76.800	116.300	109.600	166.800	149.300
Transmitting ERP (watts)	0.630	15.510	83.280	107.290	28.880	2.760	0.260	0.300

Antenna: 3
Maximum Transmitting ERP in Watts: 140.820

Azimuth(from true north)	0	45	90	135	180	225	270	315
Antenna Height AAT (meters)	153.900	117.200	66.500	76.800	116.300	109.600	166.800	149.300
Transmitting ERP (watts)	17.800	1.480	0.260	0.310	1.480	24.580	100.120	93.440

Location	Latitude	Longitude	Ground Elevation (meters)	Structure Hgt to Tip (meters)	Antenna Structure Registration No.
63	37-00-27.8 N	085-15-14.6 W	286.5	77.7	1278367

Address: 340 J. Brummett Road
City: Glens Fork **County:** ADAIR **State:** KY **Construction Deadline:**

Antenna: 1
Maximum Transmitting ERP in Watts: 140.820

Azimuth(from true north)	0	45	90	135	180	225	270	315
Antenna Height AAT (meters)	108.300	86.800	79.000	82.200	122.700	100.800	68.500	113.500
Transmitting ERP (watts)	133.000	105.720	22.590	2.360	0.270	1.950	13.040	65.860

Licensee Name: CELLCO PARTNERSHIP

Call Sign: KNKN814 **File Number:** 0009262182 **Print Date:**

Location	Latitude	Longitude	Ground Elevation (meters)	Structure Hgt to Tip (meters)	Antenna Structure Registration No.
63	37-00-27.8 N	085-15-14.6 W	286.5	77.7	1278367

Address: 340 J. Brummett Road

City: Glens Fork **County:** ADAIR **State:** KY **Construction Deadline:**

Antenna: 2

Maximum Transmitting ERP in Watts: 140.820

Azimuth(from true north)	0	45	90	135	180	225	270	315
Antenna Height AAT (meters)	108.300	86.800	79.000	82.200	122.700	100.800	68.500	113.500
Transmitting ERP (watts)	4.510	24.420	99.090	128.840	72.230	11.760	1.030	0.510

Antenna: 3

Maximum Transmitting ERP in Watts: 140.820

Azimuth(from true north)	0	45	90	135	180	225	270	315
Antenna Height AAT (meters)	108.300	86.800	79.000	82.200	122.700	100.800	68.500	113.500
Transmitting ERP (watts)	5.350	0.420	1.180	6.560	42.490	126.600	128.390	42.400

Location	Latitude	Longitude	Ground Elevation (meters)	Structure Hgt to Tip (meters)	Antenna Structure Registration No.
64	37-05-35.9 N	086-03-49.8 W	215.2	77.7	1275870

Address: 23190 Louisville Road

City: Park City **County:** BARREN **State:** KY **Construction Deadline:**

Antenna: 1

Maximum Transmitting ERP in Watts: 140.820

Azimuth(from true north)	0	45	90	135	180	225	270	315
Antenna Height AAT (meters)	71.400	55.000	74.000	71.800	65.900	95.700	105.600	98.500
Transmitting ERP (watts)	57.340	133.270	114.910	28.510	3.200	0.270	1.930	9.450

Antenna: 2

Maximum Transmitting ERP in Watts: 140.820

Azimuth(from true north)	0	45	90	135	180	225	270	315
Antenna Height AAT (meters)	71.400	55.000	74.000	71.800	65.900	95.700	105.600	98.500
Transmitting ERP (watts)	0.310	1.620	6.890	49.700	131.390	122.590	35.260	4.140

Antenna: 3

Maximum Transmitting ERP in Watts: 140.820

Azimuth(from true north)	0	45	90	135	180	225	270	315
Antenna Height AAT (meters)	71.400	55.000	74.000	71.800	65.900	95.700	105.600	98.500
Transmitting ERP (watts)	72.230	11.760	1.030	0.510	4.510	24.420	99.090	128.840

Location	Latitude	Longitude	Ground Elevation (meters)	Structure Hgt to Tip (meters)	Antenna Structure Registration No.
65	37-04-01.1 N	085-50-36.0 W	249.3	74.4	1250180

Address: Hiseville, 26 Jack Smith Road

City: Glasgow **County:** BARREN **State:** KY **Construction Deadline:**

Antenna: 1

Maximum Transmitting ERP in Watts: 140.820

Azimuth(from true north)	0	45	90	135	180	225	270	315
Antenna Height AAT (meters)	112.300	98.100	70.600	54.300	71.800	96.100	89.000	109.300
Transmitting ERP (watts)	74.790	99.710	12.510	0.540	0.240	0.240	0.240	5.280

Licensee Name: CELLCO PARTNERSHIP

Call Sign: KNKN814 **File Number:** 0009262182 **Print Date:**

Location	Latitude	Longitude	Ground Elevation (meters)	Structure Hgt to Tip (meters)	Antenna Structure Registration No.
65	37-04-01.1 N	085-50-36.0 W	249.3	74.4	1250180

Address: Hiseville, 26 Jack Smith Road

City: Glasgow **County:** BARREN **State:** KY **Construction Deadline:**

Antenna: 2

Maximum Transmitting ERP in Watts: 140.820

Azimuth(from true north)	0	45	90	135	180	225	270	315
Antenna Height AAT (meters)	112.300	98.100	70.600	54.300	71.800	96.100	89.000	109.300
Transmitting ERP (watts)	3.940	22.290	94.500	128.360	70.660	11.140	0.890	0.350

Antenna: 3

Maximum Transmitting ERP in Watts: 140.820

Azimuth(from true north)	0	45	90	135	180	225	270	315
Antenna Height AAT (meters)	112.300	98.100	70.600	54.300	71.800	96.100	89.000	109.300
Transmitting ERP (watts)	0.890	0.350	3.940	22.290	94.500	128.360	70.660	11.140

Location	Latitude	Longitude	Ground Elevation (meters)	Structure Hgt to Tip (meters)	Antenna Structure Registration No.
66	37-19-28.6 N	085-51-23.6 W	261.5	77.7	1263442

Address: Hinesdale, 785 Kirt Logsdon Road

City: Munfordville **County:** HART **State:** KY **Construction Deadline:**

Antenna: 1

Maximum Transmitting ERP in Watts: 140.820

Azimuth(from true north)	0	45	90	135	180	225	270	315
Antenna Height AAT (meters)	98.200	83.500	121.800	134.000	140.300	151.300	92.900	107.500
Transmitting ERP (watts)	83.280	107.290	28.880	2.760	0.260	0.300	0.630	15.510

Antenna: 2

Maximum Transmitting ERP in Watts: 140.820

Azimuth(from true north)	0	45	90	135	180	225	270	315
Antenna Height AAT (meters)	98.200	83.500	121.800	134.000	140.300	151.300	92.900	107.500
Transmitting ERP (watts)	0.350	9.130	63.170	117.640	43.710	4.900	0.260	0.280

Antenna: 3

Maximum Transmitting ERP in Watts: 140.820

Azimuth(from true north)	0	45	90	135	180	225	270	315
Antenna Height AAT (meters)	98.200	83.500	121.800	134.000	140.300	151.300	92.900	107.500
Transmitting ERP (watts)	3.720	0.260	0.290	0.450	12.040	74.220	112.340	35.530

Location	Latitude	Longitude	Ground Elevation (meters)	Structure Hgt to Tip (meters)	Antenna Structure Registration No.
67	37-10-38.0 N	085-55-14.4 W	280.1	77.7	1267522

Address: Horse Cave Downtown, 413 West Main Street

City: Horse Cave **County:** HART **State:** KY **Construction Deadline:**

Antenna: 1

Maximum Transmitting ERP in Watts: 140.820

Azimuth(from true north)	0	45	90	135	180	225	270	315
Antenna Height AAT (meters)	144.700	148.100	149.200	139.100	134.300	143.800	130.200	158.900
Transmitting ERP (watts)	2.790	65.390	98.980	12.180	0.450	0.240	0.240	0.240

Licensee Name: CELLCO PARTNERSHIP

Call Sign: KNKN814 **File Number:** 0009262182 **Print Date:**

Location	Latitude	Longitude	Ground Elevation (meters)	Structure Hgt to Tip (meters)	Antenna Structure Registration No.
67	37-10-38.0 N	085-55-14.4 W	280.1	77.7	1267522

Address: Horse Cave Downtown, 413 West Main Street

City: Horse Cave **County:** HART **State:** KY **Construction Deadline:**

Antenna: 2

Maximum Transmitting ERP in Watts: 140.820

Azimuth(from true north)	0	45	90	135	180	225	270	315
Antenna Height AAT (meters)	144.700	148.100	149.200	139.100	134.300	143.800	130.200	158.900
Transmitting ERP (watts)	0.240	0.240	0.270	16.050	108.530	50.760	2.790	0.240

Antenna: 3

Maximum Transmitting ERP in Watts: 140.820

Azimuth(from true north)	0	45	90	135	180	225	270	315
Antenna Height AAT (meters)	144.700	148.100	149.200	139.100	134.300	143.800	130.200	158.900
Transmitting ERP (watts)	39.400	1.890	0.240	0.240	0.240	0.360	22.670	113.640

Location	Latitude	Longitude	Ground Elevation (meters)	Structure Hgt to Tip (meters)	Antenna Structure Registration No.
68	37-04-25.0 N	085-42-47.2 W	246.2	77.7	1260710

Address: 243 Harold Poynter Road

City: Knob Lick **County:** METCALFE **State:** KY **Construction Deadline:**

Antenna: 1

Maximum Transmitting ERP in Watts: 140.820

Azimuth(from true north)	0	45	90	135	180	225	270	315
Antenna Height AAT (meters)	89.000	88.700	80.700	66.000	38.100	60.300	78.700	107.700
Transmitting ERP (watts)	116.290	30.590	1.250	0.240	0.240	0.240	0.620	32.030

Antenna: 2

Maximum Transmitting ERP in Watts: 140.820

Azimuth(from true north)	0	45	90	135	180	225	270	315
Antenna Height AAT (meters)	89.000	88.700	80.700	66.000	38.100	60.300	78.700	107.700
Transmitting ERP (watts)	12.040	74.220	112.340	35.530	3.720	0.260	0.290	0.450

Antenna: 3

Maximum Transmitting ERP in Watts: 140.820

Azimuth(from true north)	0	45	90	135	180	225	270	315
Antenna Height AAT (meters)	89.000	88.700	80.700	66.000	38.100	60.300	78.700	107.700
Transmitting ERP (watts)	8.330	0.490	0.260	0.300	4.900	45.770	117.640	63.170

Location	Latitude	Longitude	Ground Elevation (meters)	Structure Hgt to Tip (meters)	Antenna Structure Registration No.
69	37-01-03.9 N	085-54-42.3 W	254.8	68.5	1230168

Address: Glasgow II, 156 Robert Bishop Road

City: Glasgow **County:** BARREN **State:** KY **Construction Deadline:**

Antenna: 1

Maximum Transmitting ERP in Watts: 140.820

Azimuth(from true north)	0	45	90	135	180	225	270	315
Antenna Height AAT (meters)	101.800	97.200	66.700	75.200	101.000	116.100	103.100	98.800
Transmitting ERP (watts)	80.450	63.170	11.630	0.910	0.260	0.260	1.680	22.420

Licensee Name: CELLCO PARTNERSHIP

Call Sign: KNKN814 **File Number:** 0009262182 **Print Date:**

Location	Latitude	Longitude	Ground Elevation (meters)	Structure Hgt to Tip (meters)	Antenna Structure Registration No.
69	37-01-03.9 N	085-54-42.3 W	254.8	68.5	1230168

Address: Glasgow II, 156 Robert Bishop Road

City: Glasgow **County:** BARREN **State:** KY **Construction Deadline:**

Antenna: 2

Maximum Transmitting ERP in Watts: 140.820

Azimuth(from true north)	0	45	90	135	180	225	270	315
Antenna Height AAT (meters)	101.800	97.200	66.700	75.200	101.000	116.100	103.100	98.800
Transmitting ERP (watts)	0.510	11.360	61.740	82.330	23.470	2.370	0.260	0.260

Antenna: 3

Maximum Transmitting ERP in Watts: 140.820

Azimuth(from true north)	0	45	90	135	180	225	270	315
Antenna Height AAT (meters)	101.800	97.200	66.700	75.200	101.000	116.100	103.100	98.800
Transmitting ERP (watts)	1.060	0.240	0.240	0.240	2.850	44.210	63.910	11.630

Location	Latitude	Longitude	Ground Elevation (meters)	Structure Hgt to Tip (meters)	Antenna Structure Registration No.
70	36-59-35.6 N	085-46-20.7 W	256.3	106.4	1248189

Address: Slick Rock, 1636 Beaver Creek Road

City: Glasgow **County:** BARREN **State:** KY **Construction Deadline:**

Antenna: 1

Maximum Transmitting ERP in Watts: 140.820

Azimuth(from true north)	0	45	90	135	180	225	270	315
Antenna Height AAT (meters)	93.300	80.400	81.500	50.600	92.700	113.300	106.000	103.200
Transmitting ERP (watts)	13.820	74.230	95.620	25.740	2.460	0.240	0.270	0.560

Antenna: 2

Maximum Transmitting ERP in Watts: 140.820

Azimuth(from true north)	0	45	90	135	180	225	270	315
Antenna Height AAT (meters)	93.300	80.400	81.500	50.600	92.700	113.300	106.000	103.200
Transmitting ERP (watts)	0.240	0.280	6.030	49.040	104.850	46.830	5.630	0.290

Antenna: 3

Maximum Transmitting ERP in Watts: 140.820

Azimuth(from true north)	0	45	90	135	180	225	270	315
Antenna Height AAT (meters)	93.300	80.400	81.500	50.600	92.700	113.300	106.000	103.200
Transmitting ERP (watts)	10.240	0.670	0.240	0.240	4.070	34.450	104.820	65.670

Location	Latitude	Longitude	Ground Elevation (meters)	Structure Hgt to Tip (meters)	Antenna Structure Registration No.
71	36-53-29.8 N	085-50-49.9 W	237.4	60.6	

Address: Temple Hill, 215 Peden-Matthews Road

City: Glasgow **County:** BARREN **State:** KY **Construction Deadline:**

Antenna: 1

Maximum Transmitting ERP in Watts: 140.820

Azimuth(from true north)	0	45	90	135	180	225	270	315
Antenna Height AAT (meters)	47.300	45.800	38.900	59.200	48.200	58.600	85.800	82.100
Transmitting ERP (watts)	30.940	107.290	83.280	13.820	1.050	0.260	0.310	2.290

Licensee Name: CELLCO PARTNERSHIP

Call Sign: KNKN814 **File Number:** 0009262182 **Print Date:**

Location	Latitude	Longitude	Ground Elevation (meters)	Structure Hgt to Tip (meters)	Antenna Structure Registration No.
71	36-53-29.8 N	085-50-49.9 W	237.4	60.6	

Address: Temple Hill, 215 Peden-Matthews Road
City: Glasgow **County:** BARREN **State:** KY **Construction Deadline:**

Antenna: 2
Maximum Transmitting ERP in Watts: 140.820

Azimuth(from true north)	0	45	90	135	180	225	270	315
Antenna Height AAT (meters)	47.300	45.800	38.900	59.200	48.200	58.600	85.800	82.100
Transmitting ERP (watts)	0.380	0.450	9.820	79.830	170.670	76.240	9.170	0.470

Antenna: 3
Maximum Transmitting ERP in Watts: 140.820

Azimuth(from true north)	0	45	90	135	180	225	270	315
Antenna Height AAT (meters)	47.300	45.800	38.900	59.200	48.200	58.600	85.800	82.100
Transmitting ERP (watts)	41.900	4.000	0.380	0.440	0.920	22.500	120.830	155.660

Location	Latitude	Longitude	Ground Elevation (meters)	Structure Hgt to Tip (meters)	Antenna Structure Registration No.
72	36-50-21.2 N	085-36-18.3 W	268.2	77.7	1261655

Address: Willow Shade, 680 N.C. Hurt Road
City: Tompkinsville **County:** MONROE **State:** KY **Construction Deadline:**

Antenna: 1
Maximum Transmitting ERP in Watts: 140.820

Azimuth(from true north)	0	45	90	135	180	225	270	315
Antenna Height AAT (meters)	78.200	72.500	122.700	127.900	90.600	44.500	58.900	42.500
Transmitting ERP (watts)	19.520	91.310	100.120	22.420	2.040	0.260	0.310	0.960

Antenna: 2
Maximum Transmitting ERP in Watts: 140.820

Azimuth(from true north)	0	45	90	135	180	225	270	315
Antenna Height AAT (meters)	78.200	72.500	122.700	127.900	90.600	44.500	58.900	42.500
Transmitting ERP (watts)	0.260	0.300	3.390	38.070	112.340	72.530	10.730	0.730

Antenna: 3
Maximum Transmitting ERP in Watts: 140.820

Azimuth(from true north)	0	45	90	135	180	225	270	315
Antenna Height AAT (meters)	78.200	72.500	122.700	127.900	90.600	44.500	58.900	42.500
Transmitting ERP (watts)	28.880	2.760	0.260	0.300	0.630	15.510	83.280	107.290

Location	Latitude	Longitude	Ground Elevation (meters)	Structure Hgt to Tip (meters)	Antenna Structure Registration No.
73	36-45-21.5 N	085-03-35.7 W	353.6	78.6	1258266

Address: Cartwright, Old Hwy 90 (KY10655-A)
City: Albany **County:** CLINTON **State:** KY **Construction Deadline:**

Antenna: 1
Maximum Transmitting ERP in Watts: 140.820

Azimuth(from true north)	0	45	90	135	180	225	270	315
Antenna Height AAT (meters)	156.900	140.200	105.000	45.800	77.300	86.000	132.200	171.200
Transmitting ERP (watts)	131.390	122.590	35.260	4.140	0.310	1.620	6.890	49.700

Licensee Name: CELLCO PARTNERSHIP

Call Sign: KNKN814 **File Number:** 0009262182 **Print Date:**

Location	Latitude	Longitude	Ground Elevation (meters)	Structure Hgt to Tip (meters)	Antenna Structure Registration No.
73	36-45-21.5 N	085-03-35.7 W	353.6	78.6	1258266

Address: Cartwright, Old Hwy 90 (KY10655-A)
City: Albany **County:** CLINTON **State:** KY **Construction Deadline:**

Antenna: 2
Maximum Transmitting ERP in Watts: 140.820

Azimuth(from true north)	0	45	90	135	180	225	270	315
Antenna Height AAT (meters)	156.900	140.200	105.000	45.800	77.300	86.000	132.200	171.200
Transmitting ERP (watts)	2.180	16.200	75.640	129.140	95.070	17.850	1.750	0.270

Antenna: 3
Maximum Transmitting ERP in Watts: 140.820

Azimuth(from true north)	0	45	90	135	180	225	270	315
Antenna Height AAT (meters)	156.900	140.200	105.000	45.800	77.300	86.000	132.200	171.200
Transmitting ERP (watts)	9.560	0.760	0.650	5.540	28.840	110.190	131.780	61.330

Location	Latitude	Longitude	Ground Elevation (meters)	Structure Hgt to Tip (meters)	Antenna Structure Registration No.
74	37-05-28.2 N	085-18-03.9 W	251.4	93.2	1228813

Address: Columbia II, 1117 Gaston Ave.
City: Columbia **County:** ADAIR **State:** KY **Construction Deadline:**

Antenna: 1
Maximum Transmitting ERP in Watts: 140.820

Azimuth(from true north)	0	45	90	135	180	225	270	315
Antenna Height AAT (meters)	84.700	76.800	55.100	72.700	59.500	47.200	97.600	100.900
Transmitting ERP (watts)	3.730	15.320	11.730	14.350	8.940	0.760	0.260	0.260

Antenna: 2
Maximum Transmitting ERP in Watts: 140.820

Azimuth(from true north)	0	45	90	135	180	225	270	315
Antenna Height AAT (meters)	84.700	76.800	55.100	72.700	59.500	47.200	97.600	100.900
Transmitting ERP (watts)	0.490	0.260	0.300	4.900	45.770	117.640	63.170	8.330

Antenna: 3
Maximum Transmitting ERP in Watts: 140.820

Azimuth(from true north)	0	45	90	135	180	225	270	315
Antenna Height AAT (meters)	84.700	76.800	55.100	72.700	59.500	47.200	97.600	100.900
Transmitting ERP (watts)	12.770	12.150	3.620	0.260	0.270	0.520	7.080	13.060

Location	Latitude	Longitude	Ground Elevation (meters)	Structure Hgt to Tip (meters)	Antenna Structure Registration No.
75	36-39-32.1 N	085-36-54.3 W	314.6	77.7	1278911

Address: Hestand, 150 H. Spears Road
City: Hestand **County:** MONROE **State:** KY **Construction Deadline:**

Antenna: 1
Maximum Transmitting ERP in Watts: 140.820

Azimuth(from true north)	0	45	90	135	180	225	270	315
Antenna Height AAT (meters)	126.100	199.100	169.300	169.200	113.100	113.800	129.800	107.000
Transmitting ERP (watts)	124.610	82.100	13.580	1.250	0.280	2.730	18.240	82.650

Licensee Name: CELLCO PARTNERSHIP

Call Sign: KNKN814 **File Number:** 0009262182 **Print Date:**

Location	Latitude	Longitude	Ground Elevation (meters)	Structure Hgt to Tip (meters)	Antenna Structure Registration No.
75	36-39-32.1 N	085-36-54.3 W	314.6	77.7	1278911

Address: Hestand, 150 H. Spears Road
City: Hestand **County:** MONROE **State:** KY **Construction Deadline:**

Antenna: 2
Maximum Transmitting ERP in Watts: 140.820

Azimuth(from true north)	0	45	90	135	180	225	270	315
Antenna Height AAT (meters)	126.100	199.100	169.300	169.200	113.100	113.800	129.800	107.000
Transmitting ERP (watts)	0.230	4.050	48.030	38.780	3.370	0.230	0.230	0.230

Antenna: 3
Maximum Transmitting ERP in Watts: 140.820

Azimuth(from true north)	0	45	90	135	180	225	270	315
Antenna Height AAT (meters)	126.100	199.100	169.300	169.200	113.100	113.800	129.800	107.000
Transmitting ERP (watts)	0.300	0.270	0.270	0.270	7.860	98.980	82.330	6.390

Location	Latitude	Longitude	Ground Elevation (meters)	Structure Hgt to Tip (meters)	Antenna Structure Registration No.
76	37-01-28.9 N	085-56-25.6 W	200.3	38.1	1271460

Address: Glasgow III, 3576 Vetrans Outer Loop
City: Glasgow **County:** BARREN **State:** KY **Construction Deadline:**

Antenna: 1
Maximum Transmitting ERP in Watts: 140.820

Azimuth(from true north)	0	45	90	135	180	225	270	315
Antenna Height AAT (meters)	29.900	29.900	29.900	29.900	29.900	46.700	29.900	29.900
Transmitting ERP (watts)	2.050	33.870	137.170	124.840	23.380	1.910	0.330	0.430

Antenna: 2
Maximum Transmitting ERP in Watts: 140.820

Azimuth(from true north)	0	45	90	135	180	225	270	315
Antenna Height AAT (meters)	29.900	29.900	29.900	29.900	29.900	46.700	29.900	29.900
Transmitting ERP (watts)	0.630	0.330	0.410	6.840	63.420	162.090	83.920	10.870

Antenna: 3
Maximum Transmitting ERP in Watts: 140.820

Azimuth(from true north)	0	45	90	135	180	225	270	315
Antenna Height AAT (meters)	29.900	29.900	29.900	29.900	29.900	46.700	29.900	29.900
Transmitting ERP (watts)	154.470	48.010	4.830	0.330	0.380	0.600	16.490	101.100

Location	Latitude	Longitude	Ground Elevation (meters)	Structure Hgt to Tip (meters)	Antenna Structure Registration No.
77	36-56-37.0 N	086-00-52.0 W	218.9	91.1	1063506

Address: BARREN RIVER LAKE
City: HAYWOOD **County:** BARREN **State:** KY **Construction Deadline:**

Antenna: 1
Maximum Transmitting ERP in Watts: 140.820

Azimuth(from true north)	0	45	90	135	180	225	270	315
Antenna Height AAT (meters)	87.800	87.700	78.400	83.300	98.200	130.100	114.100	96.200
Transmitting ERP (watts)	101.050	42.130	4.720	0.240	0.240	0.610	5.870	42.130

Licensee Name: CELLCO PARTNERSHIP

Call Sign: KNKN814 **File Number:** 0009262182 **Print Date:**

Location	Latitude	Longitude	Ground Elevation (meters)	Structure Hgt to Tip (meters)	Antenna Structure Registration No.
77	36-56-37.0 N	086-00-52.0 W	218.9	91.1	1063506

Address: BARREN RIVER LAKE
City: HAYWOOD **County:** BARREN **State:** KY **Construction Deadline:**

Antenna: 2
Maximum Transmitting ERP in Watts: 140.820

Azimuth(from true north)	0	45	90	135	180	225	270	315
Antenna Height AAT (meters)	87.800	87.700	78.400	83.300	98.200	130.100	114.100	96.200
Transmitting ERP (watts)	3.390	28.830	96.130	59.190	8.040	0.390	0.240	0.350

Antenna: 3
Maximum Transmitting ERP in Watts: 140.820

Azimuth(from true north)	0	45	90	135	180	225	270	315
Antenna Height AAT (meters)	87.800	87.700	78.400	83.300	98.200	130.100	114.100	96.200
Transmitting ERP (watts)	0.620	0.240	0.340	2.410	23.740	91.110	68.010	10.650

Location	Latitude	Longitude	Ground Elevation (meters)	Structure Hgt to Tip (meters)	Antenna Structure Registration No.
78	36-58-44.0 N	085-36-47.0 W	249.9	45.7	

Address: Edmonton Downtown Water Tank, in the town of
City: Edmonton **County:** METCALFE **State:** KY **Construction Deadline:**

Antenna: 1
Maximum Transmitting ERP in Watts: 140.820

Azimuth(from true north)	0	45	90	135	180	225	270	315
Antenna Height AAT (meters)	48.500	29.900	29.900	29.900	29.900	29.900	29.900	42.000
Transmitting ERP (watts)	117.640	52.550	6.320	0.320	0.260	0.310	6.770	55.020

Antenna: 2
Maximum Transmitting ERP in Watts: 140.820

Azimuth(from true north)	0	45	90	135	180	225	270	315
Antenna Height AAT (meters)	48.500	29.900	29.900	29.900	29.900	29.900	29.900	42.000
Transmitting ERP (watts)	0.630	15.510	83.280	107.290	28.880	2.760	0.260	0.300

Antenna: 3
Maximum Transmitting ERP in Watts: 140.820

Azimuth(from true north)	0	45	90	135	180	225	270	315
Antenna Height AAT (meters)	48.500	29.900	29.900	29.900	29.900	29.900	29.900	42.000
Transmitting ERP (watts)	1.050	0.260	0.310	2.290	30.940	107.290	83.280	13.820

Location	Latitude	Longitude	Ground Elevation (meters)	Structure Hgt to Tip (meters)	Antenna Structure Registration No.
79	36-52-32.5 N	085-24-08.7 W	265.2	77.7	1275158

Address: Smith Bridge, 7031 Columbia Road
City: Burkesville **County:** CUMBERLAND **State:** KY **Construction Deadline:**

Antenna: 1
Maximum Transmitting ERP in Watts: 140.820

Azimuth(from true north)	0	45	90	135	180	225	270	315
Antenna Height AAT (meters)	50.900	83.800	118.700	123.800	120.900	128.700	92.600	76.800
Transmitting ERP (watts)	5.460	32.920	114.480	130.660	49.070	6.770	0.450	0.620

Licensee Name: CELLCO PARTNERSHIP

Call Sign: KNKN814 **File Number:** 0009262182 **Print Date:**

Location	Latitude	Longitude	Ground Elevation (meters)	Structure Hgt to Tip (meters)	Antenna Structure Registration No.
79	36-52-32.5 N	085-24-08.7 W	265.2	77.7	1275158

Address: Smith Bridge, 7031 Columbia Road

City: Burkesville **County:** CUMBERLAND **State:** KY **Construction Deadline:**

Antenna: 2

Maximum Transmitting ERP in Watts: 140.820

Azimuth(from true north)	0	45	90	135	180	225	270	315
Antenna Height AAT (meters)	50.900	83.800	118.700	123.800	120.900	128.700	92.600	76.800
Transmitting ERP (watts)	1.250	0.280	2.730	18.240	82.650	124.610	82.100	13.580

Antenna: 3

Maximum Transmitting ERP in Watts: 140.820

Azimuth(from true north)	0	45	90	135	180	225	270	315
Antenna Height AAT (meters)	50.900	83.800	118.700	123.800	120.900	128.700	92.600	76.800
Transmitting ERP (watts)	93.210	17.180	1.520	0.270	1.720	14.250	71.470	128.360

Location	Latitude	Longitude	Ground Elevation (meters)	Structure Hgt to Tip (meters)	Antenna Structure Registration No.
80	36-46-19.8 N	084-45-59.0 W	351.7	77.7	1271461

Address: Coopersville, 145 Abbott Road

City: Monticello **County:** WAYNE **State:** KY **Construction Deadline:**

Antenna: 1

Maximum Transmitting ERP in Watts: 140.820

Azimuth(from true north)	0	45	90	135	180	225	270	315
Antenna Height AAT (meters)	67.900	149.400	100.200	78.600	97.200	29.900	101.300	118.700
Transmitting ERP (watts)	3.330	29.550	115.490	103.170	20.970	1.630	0.360	0.270

Antenna: 2

Maximum Transmitting ERP in Watts: 140.820

Azimuth(from true north)	0	45	90	135	180	225	270	315
Antenna Height AAT (meters)	67.900	149.400	100.200	78.600	97.200	29.900	101.300	118.700
Transmitting ERP (watts)	0.280	0.270	3.570	31.280	114.670	85.770	14.800	1.070

Antenna: 3

Maximum Transmitting ERP in Watts: 140.820

Azimuth(from true north)	0	45	90	135	180	225	270	315
Antenna Height AAT (meters)	67.900	149.400	100.200	78.600	97.200	29.900	101.300	118.700
Transmitting ERP (watts)	11.150	0.740	0.260	0.340	3.750	40.860	122.700	78.480

Control Points:

Control Pt. No. 1

Address: 316-W LINCOLN TRAIL

City: RADCLIFF **County:** **State:** KY **Telephone Number:**

Waivers/Conditions:

NONE

Federal Communications Commission

Wireless Telecommunications Bureau

RADIO STATION AUTHORIZATION

LICENSEE: CELLCO PARTNERSHIP

ATTN: REGULATORY
CELLCO PARTNERSHIP
5055 NORTH POINT PKWY, NP2NE ENGINEERING
ALPHARETTA, GA 30022

Call Sign	File Number
WPWU920	0009262037
Radio Service	
WZ - 700 MHz Lower Band (Blocks C, D)	

FCC Registration Number (FRN): 0003290673

Grant Date	Effective Date	Expiration Date	Print Date
07-12-2019	01-13-2021	06-13-2029	03-10-2021

Market Number	Channel Block	Sub-Market Designator
CMA447	C	0

Market Name
Kentucky 5 - Barren

1st Build-out Date	2nd Build-out Date	3rd Build-out Date	4th Build-out Date
06-13-2019			

Waivers/Conditions:

If the facilities authorized herein are used to provide broadcast operations, whether exclusively or in combination with other services, the licensee must seek renewal of the license either within eight years from the commencement of the broadcast service or within the term of the license had the broadcast service not been provided, whichever period is shorter in length. See 47 CFR §27.13(b).

Operation of the facilities authorized herein, are subject to the condition that harmful interference may not be caused to, but must be accepted from UHF TV transmitters in Canada and Mexico as identified in existing and any future agreements with those countries.

Conditions:
Pursuant to §309(h) of the Communications Act of 1934, as amended, 47 U.S.C. §309(h), this license is subject to the following conditions: This license shall not vest in the licensee any right to operate the station nor any right in the use of the frequencies designated in the license beyond the term thereof nor in any other manner than authorized herein. Neither the license nor the right granted thereunder shall be assigned or otherwise transferred in violation of the Communications Act of 1934, as amended. See 47 U.S.C. § 310(d). This license is subject in terms to the right of use or control conferred by §706 of the Communications Act of 1934, as amended. See 47 U.S.C. §606.

This license may not authorize operation throughout the entire geographic area or spectrum identified on the hardcopy version. To view the specific geographic area and spectrum authorized by this license, refer to the Spectrum and Market Area information under the Market Tab of the license record in the Universal Licensing System (ULS). To view the license record, go to the ULS homepage at http://wireless.fcc.gov/uls/index.htm?job=home and select “License Search”. Follow the instructions on how to search for license information.

Licensee Name: CELLCO PARTNERSHIP

Call Sign: WPWU920 **File Number:** 0009262037 **Print Date:** 03-10-2021

700 MHz Relicensed Area Information:

Market	Market Name	Buildout Deadline	Buildout Notification	Status

Federal Communications Commission

Wireless Telecommunications Bureau

RADIO STATION AUTHORIZATION

LICENSEE: CELLCO PARTNERSHIP

ATTN: REGULATORY
CELLCO PARTNERSHIP
5055 NORTH POINT PKWY, NP2NE ENGINEERING
ALPHARETTA, GA 30022

Call Sign	File Number
WPZV473	0010160221
Radio Service	
CW - PCS Broadband	

FCC Registration Number (FRN): 0003290673

Grant Date	Effective Date	Expiration Date	Print Date
06-23-2015	09-23-2022	06-23-2025	02-15-2023

Market Number	Channel Block	Sub-Market Designator
MTA026	A	27

Market Name
Louisville-Lexington-Evansvill

1st Build-out Date	2nd Build-out Date	3rd Build-out Date	4th Build-out Date
06-23-2000	06-23-2005		

Waivers/Conditions:

This authorization is subject to the condition that, in the event that systems using the same frequencies as granted herein are authorized in an adjacent foreign territory (Canada/United States), future coordination of any base station transmitters within 72 km (45 miles) of the United States/Canada border shall be required to eliminate any harmful interference to operations in the adjacent foreign territory and to ensure continuance of equal access to the frequencies by both countries.

Conditions:
Pursuant to §309(h) of the Communications Act of 1934, as amended, 47 U.S.C. §309(h), this license is subject to the following conditions: This license shall not vest in the licensee any right to operate the station nor any right in the use of the frequencies designated in the license beyond the term thereof nor in any other manner than authorized herein. Neither the license nor the right granted thereunder shall be assigned or otherwise transferred in violation of the Communications Act of 1934, as amended. See 47 U.S.C. § 310(d). This license is subject in terms to the right of use or control conferred by §706 of the Communications Act of 1934, as amended. See 47 U.S.C. §606.

This license may not authorize operation throughout the entire geographic area or spectrum identified on the hardcopy version. To view the specific geographic area and spectrum authorized by this license, refer to the Spectrum and Market Area information under the Market Tab of the license record in the Universal Licensing System (ULS). To view the license record, go to the ULS homepage at http://wireless.fcc.gov/uls/index.htm?job=home and select “License Search”. Follow the instructions on how to search for license information.

FCC 601-MB
August 2021

Licensee Name: CELLCO PARTNERSHIP

Call Sign: WPZV473 **File Number:** 0010160221 **Print Date:** 02-15-2023

700 MHz Relicensed Area Information:

Market	Market Name	Buildout Deadline	Buildout Notification	Status

Federal Communications Commission

Wireless Telecommunications Bureau

RADIO STATION AUTHORIZATION

LICENSEE: CELLCO PARTNERSHIP

CELLCO PARTNERSHIP
5055 NORTH POINT PKWY, NP2NE NETWORK ENGINEERING
ALPHARETTA, GA 30022

Call Sign	File Number
WQGA718	0009793647
Radio Service	
AW - AWS (1710-1755 MHz and 2110-2155 MHz)	

FCC Registration Number (FRN): 0003290673

Grant Date	Effective Date	Expiration Date	Print Date
02-22-2022	02-22-2022	11-29-2036	02-23-2022

Market Number	Channel Block	Sub-Market Designator
REA004	F	15

Market Name
Mississippi Valley

1st Build-out Date	2nd Build-out Date	3rd Build-out Date	4th Build-out Date

Waivers/Conditions:

This authorization is conditioned upon the licensee, prior to initiating operations from any base or fixed station, making reasonable efforts to coordinate frequency usage with known co-channel and adjacent channel incumbent federal users operating in the 1710-1755 MHz band whose facilities could be affected by the proposed operations. See, e.g., FCC and NTIA Coordination Procedures in the 1710-1755 MHz Band, Public Notice, FCC 06-50, WTB Docket No. 02-353, rel. April 20, 2006.

Conditions:
Pursuant to §309(h) of the Communications Act of 1934, as amended, 47 U.S.C. §309(h), this license is subject to the following conditions: This license shall not vest in the licensee any right to operate the station nor any right in the use of the frequencies designated in the license beyond the term thereof nor in any other manner than authorized herein. Neither the license nor the right granted thereunder shall be assigned or otherwise transferred in violation of the Communications Act of 1934, as amended. See 47 U.S.C. § 310(d). This license is subject in terms to the right of use or control conferred by §706 of the Communications Act of 1934, as amended. See 47 U.S.C. §606.

This license may not authorize operation throughout the entire geographic area or spectrum identified on the hardcopy version. To view the specific geographic area and spectrum authorized by this license, refer to the Spectrum and Market Area information under the Market Tab of the license record in the Universal Licensing System (ULS). To view the license record, go to the ULS homepage at http://wireless.fcc.gov/uls/index.htm?job=home and select "License Search". Follow the instructions on how to search for license information.

Licensee Name: CELLCO PARTNERSHIP

Call Sign: WQGA718 **File Number:** 0009793647 **Print Date:** 02-23-2022

700 MHz Relicensed Area Information:

Market	Market Name	Buildout Deadline	Buildout Notification	Status

Federal Communications Commission

Wireless Telecommunications Bureau

RADIO STATION AUTHORIZATION

LICENSEE: CELLCO PARTNERSHIP

CELLCO PARTNERSHIP
5055 NORTH POINT PKWY, NP2NE NETWORK ENGINEERING
ALPHARETTA, GA 30022

Call Sign	File Number
WQGA940	0009774996
Radio Service	
AW - AWS (1710-1755 MHz and 2110-2155 MHz)	

FCC Registration Number (FRN): 0003290673

Grant Date	Effective Date	Expiration Date	Print Date
12-21-2021	12-21-2021	11-29-2036	12-21-2021

Market Number	Channel Block	Sub-Market Designator
BEA047	B	11

Market Name
Lexington, KY-TN-VA-WV

1st Build-out Date	2nd Build-out Date	3rd Build-out Date	4th Build-out Date

Waivers/Conditions:

This authorization is conditioned upon the licensee, prior to initiating operations from any base or fixed station, making reasonable efforts to coordinate frequency usage with known co-channel and adjacent channel incumbent federal users operating in the 1710-1755 MHz band whose facilities could be affected by the proposed operations. See, e.g., FCC and NTIA Coordination Procedures in the 1710-1755 MHz Band, Public Notice, FCC 06-50, WTB Docket No. 02-353, rel. April 20, 2006.

Conditions:
Pursuant to §309(h) of the Communications Act of 1934, as amended, 47 U.S.C. §309(h), this license is subject to the following conditions: This license shall not vest in the licensee any right to operate the station nor any right in the use of the frequencies designated in the license beyond the term thereof nor in any other manner than authorized herein. Neither the license nor the right granted thereunder shall be assigned or otherwise transferred in violation of the Communications Act of 1934, as amended. See 47 U.S.C. § 310(d). This license is subject in terms to the right of use or control conferred by §706 of the Communications Act of 1934, as amended. See 47 U.S.C. §606.

This license may not authorize operation throughout the entire geographic area or spectrum identified on the hardcopy version. To view the specific geographic area and spectrum authorized by this license, refer to the Spectrum and Market Area information under the Market Tab of the license record in the Universal Licensing System (ULS). To view the license record, go to the ULS homepage at http://wireless.fcc.gov/uls/index.htm?job=home and select “License Search”. Follow the instructions on how to search for license information.

FCC 601-MB
August 2021

Licensee Name: CELLCO PARTNERSHIP

Call Sign: WQGA940 **File Number:** 0009774996 **Print Date:** 12-21-2021

700 MHz Relicensed Area Information:

Market	Market Name	Buildout Deadline	Buildout Notification	Status

Federal Communications Commission

Wireless Telecommunications Bureau

RADIO STATION AUTHORIZATION

LICENSEE: CELLCO PARTNERSHIP

ATTN: REGULATORY
CELLCO PARTNERSHIP
5055 NORTH POINT PKWY, NP2NE ENGINEERING
ALPHARETTA, GA 30022

Call Sign	File Number
WQIZ368	0009262040
Radio Service	
WY - 700 MHz Lower Band (Blocks A, B & E)	

FCC Registration Number (FRN): 0003290673

Grant Date	Effective Date	Expiration Date	Print Date
09-20-2019	01-13-2021	06-13-2029	03-10-2021

Market Number	Channel Block	Sub-Market Designator
CMA447	B	0

Market Name
Kentucky 5 - Barren

1st Build-out Date	2nd Build-out Date	3rd Build-out Date	4th Build-out Date
12-13-2016	06-13-2019		

Waivers/Conditions:

If the facilities authorized herein are used to provide broadcast operations, whether exclusively or in combination with other services, the licensee must seek renewal of the license either within eight years from the commencement of the broadcast service or within the term of the license had the broadcast service not been provided, whichever period is shorter in length. See 47 CFR §27.13(b).

The interim construction benchmark has been extended to December 13, 2013 pursuant to Public Notice DA 13-680 released April 10, 2013. The extension is non-transferrable and any proposed assignee or transferee seeking Commission approval to acquire thislicense may independently seek relief justifying an extension of the interim construction benchmark set forth in 47 C.F.R. § 27.14(g).

Conditions:
Pursuant to §309(h) of the Communications Act of 1934, as amended, 47 U.S.C. §309(h), this license is subject to the following conditions: This license shall not vest in the licensee any right to operate the station nor any right in the use of the frequencies designated in the license beyond the term thereof nor in any other manner than authorized herein. Neither the license nor the right granted thereunder shall be assigned or otherwise transferred in violation of the Communications Act of 1934, as amended. See 47 U.S.C. § 310(d). This license is subject in terms to the right of use or control conferred by §706 of the Communications Act of 1934, as amended. See 47 U.S.C. §606.

This license may not authorize operation throughout the entire geographic area or spectrum identified on the hardcopy version. To view the specific geographic area and spectrum authorized by this license, refer to the Spectrum and Market Area information under the Market Tab of the license record in the Universal Licensing System (ULS). To view the license record, go to the ULS homepage at http://wireless.fcc.gov/uls/index.htm?job=home and select “License Search”. Follow the instructions on how to search for license information.

Licensee Name: CELLCO PARTNERSHIP

Call Sign: WQIZ368 **File Number:** 0009262040 **Print Date:** 03-10-2021

700 MHz Relicensed Area Information:

Market	Market Name	Buildout Deadline	Buildout Notification	Status

Federal Communications Commission

Wireless Telecommunications Bureau

RADIO STATION AUTHORIZATION

LICENSEE: CELLCO PARTNERSHIP

ATTN: REGULATORY
CELLCO PARTNERSHIP
5055 NORTH POINT PKWY, NP2NE NETWORK ENGINEERING
ALPHARETTA, GA 30022

Call Sign	File Number
WQJQ692	
Radio Service	
WU - 700 MHz Upper Band (Block C)	

FCC Registration Number (FRN): 0003290673

Grant Date	Effective Date	Expiration Date	Print Date
01-10-2020	02-11-2021	06-13-2029	

Market Number	Channel Block	Sub-Market Designator
REA004	C	0

Market Name
Mississippi Valley

1st Build-out Date	2nd Build-out Date	3rd Build-out Date	4th Build-out Date
06-13-2013	06-13-2019		

Waivers/Conditions:

If the facilities authorized herein are used to provide broadcast operations, whether exclusively or in combination with other services, the licensee must seek renewal of the license either within eight years from the commencement of the broadcast service or within the term of the license had the broadcast service not been provided, whichever period is shorter in length. See 47 CFR §27.13(b).

This authorization is conditioned upon compliance with section 27.16 of the Commission's rules

Conditions:
Pursuant to §309(h) of the Communications Act of 1934, as amended, 47 U.S.C. §309(h), this license is subject to the following conditions: This license shall not vest in the licensee any right to operate the station nor any right in the use of the frequencies designated in the license beyond the term thereof nor in any other manner than authorized herein. Neither the license nor the right granted thereunder shall be assigned or otherwise transferred in violation of the Communications Act of 1934, as amended. See 47 U.S.C. § 310(d). This license is subject in terms to the right of use or control conferred by §706 of the Communications Act of 1934, as amended. See 47 U.S.C. §606.

This license may not authorize operation throughout the entire geographic area or spectrum identified on the hardcopy version. To view the specific geographic area and spectrum authorized by this license, refer to the Spectrum and Market Area information under the Market Tab of the license record in the Universal Licensing System (ULS). To view the license record, go to the ULS homepage at http://wireless.fcc.gov/uls/index.htm?job=home and select “License Search”. Follow the instructions on how to search for license information.

Licensee Name: CELLCO PARTNERSHIP

Call Sign: WQJQ692 **File Number:** **Print Date:**

700 MHz Relicensed Area Information:

Market	Market Name	Buildout Deadline	Buildout Notification	Status

Federal Communications Commission

Wireless Telecommunications Bureau

RADIO STATION AUTHORIZATION

LICENSEE: CELLCO PARTNERSHIP

ATTN: REGULATORY
CELLCO PARTNERSHIP
5055 NORTH POINT PKWY, NP2NE ENGINEERING
ALPHARETTA, GA 30022

Call Sign	File Number
WRAM732	0009262182
Radio Service	
WT - 600 MHz Band	

FCC Registration Number (FRN): 0003290673

Grant Date	Effective Date	Expiration Date	Print Date
01-09-2018	01-13-2021	01-09-2030	03-11-2021

Market Number	Channel Block	Sub-Market Designator
PEA096	A	1

Market Name
Richmond, KY

1st Build-out Date	2nd Build-out Date	3rd Build-out Date	4th Build-out Date
01-09-2024			

Waivers/Conditions:

NONE

Conditions:
Pursuant to §309(h) of the Communications Act of 1934, as amended, 47 U.S.C. §309(h), this license is subject to the following conditions: This license shall not vest in the licensee any right to operate the station nor any right in the use of the frequencies designated in the license beyond the term thereof nor in any other manner than authorized herein. Neither the license nor the right granted thereunder shall be assigned or otherwise transferred in violation of the Communications Act of 1934, as amended. See 47 U.S.C. § 310(d). This license is subject in terms to the right of use or control conferred by §706 of the Communications Act of 1934, as amended. See 47 U.S.C. §606.

This license may not authorize operation throughout the entire geographic area or spectrum identified on the hardcopy version. To view the specific geographic area and spectrum authorized by this license, refer to the Spectrum and Market Area information under the Market Tab of the license record in the Universal Licensing System (ULS). To view the license record, go to the ULS homepage at http://wireless.fcc.gov/uls/index.htm?job=home and select "License Search". Follow the instructions on how to search for license information.

Licensee Name: CELLCO PARTNERSHIP

Call Sign: WRAM732 **File Number:** 0009262182 **Print Date:** 03-11-2021

700 MHz Relicensed Area Information:

Market	Market Name	Buildout Deadline	Buildout Notification	Status

Federal Communications Commission

Wireless Telecommunications Bureau

RADIO STATION AUTHORIZATION

LICENSEE: CELLCO PARTNERSHIP

ATTN: REGULATORY
CELLCO PARTNERSHIP
5055 NORTH POINT PKWY, NP2NE ENGINEERING
ALPHARETTA, GA 30022

Call Sign	File Number
WRBB972	0009262037
Radio Service	
UU - Upper Microwave Flexible Use Service	

FCC Registration Number (FRN): 0003290673

Grant Date	Effective Date	Expiration Date	Print Date
07-09-2019	01-13-2021	08-09-2029	03-10-2021

Market Number	Channel Block	Sub-Market Designator
BTA052	L1	0

Market Name
Bowling Green-Glasgow, KY

1st Build-out Date	2nd Build-out Date	3rd Build-out Date	4th Build-out Date
06-01-2024			

Waivers/Conditions:

NONE

Conditions:
Pursuant to §309(h) of the Communications Act of 1934, as amended, 47 U.S.C. §309(h), this license is subject to the following conditions: This license shall not vest in the licensee any right to operate the station nor any right in the use of the frequencies designated in the license beyond the term thereof nor in any other manner than authorized herein. Neither the license nor the right granted thereunder shall be assigned or otherwise transferred in violation of the Communications Act of 1934, as amended. See 47 U.S.C. § 310(d). This license is subject in terms to the right of use or control conferred by §706 of the Communications Act of 1934, as amended. See 47 U.S.C. §606.

This license may not authorize operation throughout the entire geographic area or spectrum identified on the hardcopy version. To view the specific geographic area and spectrum authorized by this license, refer to the Spectrum and Market Area information under the Market Tab of the license record in the Universal Licensing System (ULS). To view the license record, go to the ULS homepage at http://wireless.fcc.gov/uls/index.htm?job=home and select “License Search”. Follow the instructions on how to search for license information.

Licensee Name: CELLCO PARTNERSHIP

Call Sign: WRBB972 **File Number:** 0009262037 **Print Date:** 03-10-2021

700 MHz Relicensed Area Information:

Market	Market Name	Buildout Deadline	Buildout Notification	Status

Federal Communications Commission

Wireless Telecommunications Bureau

RADIO STATION AUTHORIZATION

LICENSEE: CELLCO PARTNERSHIP

ATTN: REGULATORY
CELLCO PARTNERSHIP
5055 NORTH POINT PKWY, NP2NE ENGINEERING
ALPHARETTA, GA 30022

Call Sign	File Number
WREV443	0009262182
Radio Service	
UU - Upper Microwave Flexible Use Service	

FCC Registration Number (FRN): 0003290673

Grant Date	Effective Date	Expiration Date	Print Date
12-11-2019	01-13-2021	12-11-2029	03-11-2021

Market Number	Channel Block	Sub-Market Designator
PEA096	A	3

Market Name
Richmond, KY

1st Build-out Date	2nd Build-out Date	3rd Build-out Date	4th Build-out Date

Waivers/Conditions:

NONE

Conditions:
Pursuant to §309(h) of the Communications Act of 1934, as amended, 47 U.S.C. §309(h), this license is subject to the following conditions: This license shall not vest in the licensee any right to operate the station nor any right in the use of the frequencies designated in the license beyond the term thereof nor in any other manner than authorized herein. Neither the license nor the right granted thereunder shall be assigned or otherwise transferred in violation of the Communications Act of 1934, as amended. See 47 U.S.C. § 310(d). This license is subject in terms to the right of use or control conferred by §706 of the Communications Act of 1934, as amended. See 47 U.S.C. §606.

This license may not authorize operation throughout the entire geographic area or spectrum identified on the hardcopy version. To view the specific geographic area and spectrum authorized by this license, refer to the Spectrum and Market Area information under the Market Tab of the license record in the Universal Licensing System (ULS). To view the license record, go to the ULS homepage at http://wireless.fcc.gov/uls/index.htm?job=home and select “License Search”. Follow the instructions on how to search for license information.

Licensee Name: CELLCO PARTNERSHIP

Call Sign: WREV443 **File Number:** 0009262182 **Print Date:** 03-11-2021

700 MHz Relicensed Area Information:

Market	Market Name	Buildout Deadline	Buildout Notification	Status

Federal Communications Commission

Wireless Telecommunications Bureau

RADIO STATION AUTHORIZATION

LICENSEE: CELLCO PARTNERSHIP

ATTN: REGULATORY
CELLCO PARTNERSHIP
5055 NORTH POINT PKWY, NP2NE ENGINEERING
ALPHARETTA, GA 30022

Call Sign	File Number
WREV444	0009262182
Radio Service	
UU - Upper Microwave Flexible Use Service	

FCC Registration Number (FRN): 0003290673

Grant Date	Effective Date	Expiration Date	Print Date
12-11-2019	01-13-2021	12-11-2029	03-11-2021

Market Number	Channel Block	Sub-Market Designator
PEA096	B	1

Market Name
Richmond, KY

1st Build-out Date	2nd Build-out Date	3rd Build-out Date	4th Build-out Date

Waivers/Conditions:

NONE

Conditions:
Pursuant to §309(h) of the Communications Act of 1934, as amended, 47 U.S.C. §309(h), this license is subject to the following conditions: This license shall not vest in the licensee any right to operate the station nor any right in the use of the frequencies designated in the license beyond the term thereof nor in any other manner than authorized herein. Neither the license nor the right granted thereunder shall be assigned or otherwise transferred in violation of the Communications Act of 1934, as amended. See 47 U.S.C. § 310(d). This license is subject in terms to the right of use or control conferred by §706 of the Communications Act of 1934, as amended. See 47 U.S.C. §606.

This license may not authorize operation throughout the entire geographic area or spectrum identified on the hardcopy version. To view the specific geographic area and spectrum authorized by this license, refer to the Spectrum and Market Area information under the Market Tab of the license record in the Universal Licensing System (ULS). To view the license record, go to the ULS homepage at http://wireless.fcc.gov/uls/index.htm?job=home and select “License Search”. Follow the instructions on how to search for license information.

FCC 601-MB
August 2021

Licensee Name: CELLCO PARTNERSHIP

Call Sign: WREV444 **File Number:** 0009262182 **Print Date:** 03-11-2021

700 MHz Relicensed Area Information:

Market	Market Name	Buildout Deadline	Buildout Notification	Status

Federal Communications Commission

Wireless Telecommunications Bureau

RADIO STATION AUTHORIZATION

LICENSEE: CELLCO PARTNERSHIP

ATTN: REGULATORY
CELLCO PARTNERSHIP
5055 NORTH POINT PKWY, NP2NE ENGINEERING
ALPHARETTA, GA 30022

Call Sign	File Number
WRHE833	0010283156
Radio Service	
UU - Upper Microwave Flexible Use Service	

FCC Registration Number (FRN): 0003290673

Grant Date	Effective Date	Expiration Date	Print Date
06-04-2020	11-18-2022	06-04-2030	03-15-2023

Market Number	Channel Block	Sub-Market Designator
PEA096	M1	0

Market Name
Richmond, KY

1st Build-out Date	2nd Build-out Date	3rd Build-out Date	4th Build-out Date

Waivers/Conditions:

NONE

Conditions:
Pursuant to §309(h) of the Communications Act of 1934, as amended, 47 U.S.C. §309(h), this license is subject to the following conditions: This license shall not vest in the licensee any right to operate the station nor any right in the use of the frequencies designated in the license beyond the term thereof nor in any other manner than authorized herein. Neither the license nor the right granted thereunder shall be assigned or otherwise transferred in violation of the Communications Act of 1934, as amended. See 47 U.S.C. § 310(d). This license is subject in terms to the right of use or control conferred by §706 of the Communications Act of 1934, as amended. See 47 U.S.C. §606.

This license may not authorize operation throughout the entire geographic area or spectrum identified on the hardcopy version. To view the specific geographic area and spectrum authorized by this license, refer to the Spectrum and Market Area information under the Market Tab of the license record in the Universal Licensing System (ULS). To view the license record, go to the ULS homepage at http://wireless.fcc.gov/uls/index.htm?job=home and select "License Search". Follow the instructions on how to search for license information.

FCC 601-MB
August 2021

Licensee Name: CELLCO PARTNERSHIP

Call Sign: WRHE833 **File Number:** 0010283156 **Print Date:** 03-15-2023

700 MHz Relicensed Area Information:

Market	Market Name	Buildout Deadline	Buildout Notification	Status

Federal Communications Commission

Wireless Telecommunications Bureau

RADIO STATION AUTHORIZATION

LICENSEE: CELLCO PARTNERSHIP

ATTN: REGULATORY
CELLCO PARTNERSHIP
5055 NORTH POINT PKWY, NP2NE NETWORK ENGINEERING
ALPHARETTA, GA 30022

Call Sign	File Number
WRNF549	
Radio Service	
PM - 3.7 GHz Service	

FCC Registration Number (FRN): 0003290673

Grant Date	Effective Date	Expiration Date	Print Date
07-23-2021	07-23-2021	07-23-2036	

Market Number	Channel Block	Sub-Market Designator
PEA096	A1	0

Market Name
Richmond, KY

1st Build-out Date	2nd Build-out Date	3rd Build-out Date	4th Build-out Date
07-23-2029	07-23-2033		

Waivers/Conditions:

This final license provides authorization during the full 15-year license term. Operation under this final license may begin on the earlier of (1) 12/5/2025 or (2) the date that the certification for accelerated relocation for this PEA is validated by the FCC pursuant to 47 CFR § 27.1412(g).

License is conditioned on compliance with all applicable FCC rules and regulations, including licensee making payments required by 47 C.F.R. §§ 27.1401- 27.1424 as described in FCC 20-22. See FCC 20-22, paras. 178-331.

Conditions:
Pursuant to §309(h) of the Communications Act of 1934, as amended, 47 U.S.C. §309(h), this license is subject to the following conditions: This license shall not vest in the licensee any right to operate the station nor any right in the use of the frequencies designated in the license beyond the term thereof nor in any other manner than authorized herein. Neither the license nor the right granted thereunder shall be assigned or otherwise transferred in violation of the Communications Act of 1934, as amended. See 47 U.S.C. § 310(d). This license is subject in terms to the right of use or control conferred by §706 of the Communications Act of 1934, as amended. See 47 U.S.C. §606.

This license may not authorize operation throughout the entire geographic area or spectrum identified on the hardcopy version. To view the specific geographic area and spectrum authorized by this license, refer to the Spectrum and Market Area information under the Market Tab of the license record in the Universal Licensing System (ULS). To view the license record, go to the ULS homepage at http://wireless.fcc.gov/uls/index.htm?job=home and select “License Search”. Follow the instructions on how to search for license information.

Licensee Name: CELLCO PARTNERSHIP

Call Sign: WRNF549 **File Number:** **Print Date:**

700 MHz Relicensed Area Information:

Market	Market Name	Buildout Deadline	Buildout Notification	Status

Federal Communications Commission

Wireless Telecommunications Bureau

RADIO STATION AUTHORIZATION

LICENSEE: CELLCO PARTNERSHIP

ATTN: REGULATORY
CELLCO PARTNERSHIP
5055 NORTH POINT PKWY, NP2NE NETWORK ENGINEERING
ALPHARETTA, GA 30022

Call Sign	File Number
WRNF554	
Radio Service	
PM - 3.7 GHz Service	

FCC Registration Number (FRN): 0003290673

Grant Date	Effective Date	Expiration Date	Print Date
07-23-2021	07-23-2021	07-23-2036	

Market Number	Channel Block	Sub-Market Designator
PEA096	B1	0

Market Name
Richmond, KY

1st Build-out Date	2nd Build-out Date	3rd Build-out Date	4th Build-out Date
07-23-2029	07-23-2033		

Waivers/Conditions:

This final license provides authorization during the full 15-year license term. Operation under this final license may begin on the earlier of (1) 12/5/2025 or (2) the date that the certification for accelerated relocation for this PEA is validated by the FCC pursuant to 47 CFR § 27.1412(g).

License is conditioned on compliance with all applicable FCC rules and regulations, including licensee making payments required by 47 C.F.R. §§ 27.1401- 27.1424 as described in FCC 20-22. See FCC 20-22, paras. 178-331.

Conditions:
Pursuant to §309(h) of the Communications Act of 1934, as amended, 47 U.S.C. §309(h), this license is subject to the following conditions: This license shall not vest in the licensee any right to operate the station nor any right in the use of the frequencies designated in the license beyond the term thereof nor in any other manner than authorized herein. Neither the license nor the right granted thereunder shall be assigned or otherwise transferred in violation of the Communications Act of 1934, as amended. See 47 U.S.C. § 310(d). This license is subject in terms to the right of use or control conferred by §706 of the Communications Act of 1934, as amended. See 47 U.S.C. §606.

This license may not authorize operation throughout the entire geographic area or spectrum identified on the hardcopy version. To view the specific geographic area and spectrum authorized by this license, refer to the Spectrum and Market Area information under the Market Tab of the license record in the Universal Licensing System (ULS). To view the license record, go to the ULS homepage at http://wireless.fcc.gov/uls/index.htm?job=home and select “License Search”. Follow the instructions on how to search for license information.

Licensee Name: CELLCO PARTNERSHIP

Call Sign: WRNF554 **File Number:** **Print Date:**

700 MHz Relicensed Area Information:

Market	Market Name	Buildout Deadline	Buildout Notification	Status

Federal Communications Commission

Wireless Telecommunications Bureau

RADIO STATION AUTHORIZATION

LICENSEE: CELLCO PARTNERSHIP

ATTN: REGULATORY
CELLCO PARTNERSHIP
5055 NORTH POINT PKWY, NP2NE ENGINEERING
ALPHARETTA, GA 30022

Call Sign	File Number
WRWF637	0010170298
Radio Service	
AW - AWS (1710-1755 MHz and 2110-2155 MHz)	

FCC Registration Number (FRN): 0003290673

Grant Date	Effective Date	Expiration Date	Print Date
09-23-2022	09-23-2022	12-18-2036	02-16-2023

Market Number	Channel Block	Sub-Market Designator
BEA047	C	16

Market Name
Lexington, KY-TN-VA-WV

1st Build-out Date	2nd Build-out Date	3rd Build-out Date	4th Build-out Date

Waivers/Conditions:

This authorization is conditioned upon the licensee, prior to initiating operations from any base or fixed station, making reasonable efforts to coordinate frequency usage with known co-channel and adjacent channel incumbent federal users operating in the 1710-1755 MHz band whose facilities could be affected by the proposed operations. See, e.g., FCC and NTIA Coordination Procedures in the 1710-1755 MHz Band, Public Notice, FCC 06-50, WTB Docket No. 02-353, rel. April 20, 2006.

Grant of the request to update licensee name is conditioned on it not reflecting an assignment or transfer of control (see Rule 1.948); if an assignment or transfer occurred without proper notification or FCC approval, the grant is void and the station islicensed under the prior name.

Conditions:
Pursuant to §309(h) of the Communications Act of 1934, as amended, 47 U.S.C. §309(h), this license is subject to the following conditions: This license shall not vest in the licensee any right to operate the station nor any right in the use of the frequencies designated in the license beyond the term thereof nor in any other manner than authorized herein. Neither the license nor the right granted thereunder shall be assigned or otherwise transferred in violation of the Communications Act of 1934, as amended. See 47 U.S.C. § 310(d). This license is subject in terms to the right of use or control conferred by §706 of the Communications Act of 1934, as amended. See 47 U.S.C. §606.

This license may not authorize operation throughout the entire geographic area or spectrum identified on the hardcopy version. To view the specific geographic area and spectrum authorized by this license, refer to the Spectrum and Market Area information under the Market Tab of the license record in the Universal Licensing System (ULS). To view the license record, go to the ULS homepage at http://wireless.fcc.gov/uls/index.htm?job=home and select “License Search”. Follow the instructions on how to search for license information.

FCC 601-MB
August 2021

Licensee Name: CELLCO PARTNERSHIP

Call Sign: WRWF637 **File Number:** 0010170298 **Print Date:** 02-16-2023

700 MHz Relicensed Area Information:

Market	Market Name	Buildout Deadline	Buildout Notification	Status

CK AGEE RIDGE

724991

13401 N. HWY 127
ALBANY, KY 42602
CLINTON COUNTY
TENANT: CELLCO PARTNERSHIP d/b/a VERIZON WIRELESS
"CK AGEE RIDGE"

TOWERCOM

241 ATLANTIC BLVD, STE 201
NEPTUNE BEACH, FL 32266

NEW 255' TYPE TOWER
w/5' LIGHTNING ROD
TOTAL TOWER HEIGHT 260'

FROM DIRECTIONS FROM THE COUNTY OFFICE (100 SOUTH CROSS STREET, SUITE 115. ALBANY KY 42602):

HEAD SOUTH ON US–127 S / S CROSS ST TOWARD W JEFFERSON ST 95 FT, TURN LEFT ONTO W JEFFERSON ST, THEN IMMEDIATELY TURN LEFT ONTO US–127 N / S WASHINGTON ST 2.8 MI, TURN RIGHT ONTO US–127 N / CROSS ST 1.7 MI, TURN LEFT ONTO US–127 N / KY–90 / S HIGHWAY 127 8.5 MI, ARRIVE AT HIGHWAY 127, ALBANY, KY 42602.

PROJECT SUMMARY

TOWER OWNER SITE
CK AGEE RIDGE
SITE #: 724991

VERIZON WIRELESS SITE
CK AGEE RIDGE
PROJECT#: 16933258
MARKET ID: INKY
MDG#: 5000908532

SITE ADDRESS
13401 N. HWY 127
ALBANY, KY 42602
CLINTON COUNTY
E911 ADDRESS:
13401 N. HWY 127
ALBANY, KY 42602

TOWER OWNER
TOWERCOM
241 ATLANTIC BLVD, STE 201
NEPTUNE BEACH, FL 32266

PROPERTY OWNER
LOWHORN JERRY LYNN & FRANCES
1406 SPECK RD
ALBANY, KY 42602

POLICE
CLINTON COUNTY SHERIFF
PHONE: (606) 387–5111

FIRE
ALBANY FIRE DEPARTMENT
PHONE: (606) 387–9163

GENERAL INFORMATION
LATITUDE – 36° 50' 43.3" N
LONGITUDE – 85° 11' 00.7" W
1983 (NAD83)
ELEVATION – 994.8' AMSL
1988 (NAVD88)

TOWER OWNER LEASE AREA
100'–0" x 100'–0"
(10000 SF)

VERIZON WIRELESS LEASE AREA
500 SF

PROJECT TOTAL DISTURBED AREA
COMPOUND: (2500 SF) =(0.0573921 ACRE)
ACCESS DRIVE: (2654.50 SF) = (0.0609389348 ACRE)
GROSS AREA: (5154.5 SF) = (0.118331035 ACRE)

ALL CONSTRUCTION ITEMS ARE TO BE COMPLETED BY THE TOWER OWNER GENERAL CONTRACTOR UNLESS NOTED AS **(VZW GC)** WHICH SHALL BE COMPLETED BY THE VERIZON WIRELESS GENERAL CONTRACTOR

PROJECT DESCRIPTION

PROJECT DESCRIPTION:
NOTE: ALL ITEMS WITHIN THESE CONSTRUCTION DOCUMENTS ARE BY TOWER OWNER'S GENERAL CONTRACTOR AND HIS SUB–CONTRACTORS UNLESS NOTED AS **(VZW GC)** WHICH SHALL INCLUDE VERIZON WIRELESS GENERAL CONTRACTOR AND HIS SUB–CONTRACTORS. GENERALLY DESCRIBED BELOW:

TOWER OWNER SCOPE:
- INSTALL A NEW 255' SELF SUPPORT TOWER w/ 5' LIGHTNING ROD (TOTAL 260')
- INSTALL A NEW TOWER FOUNDATION SYSTEM
- INSTALL A NEW 50'X50' FENCED GRAVEL COMPOUND
- INSTALL A NEW ELECTRICAL SERVICE RUN TO SITE UTILITY H–FRAME
- INSTALL A NEW GRAVEL ACCESS DRIVE
- NO WATER OR SEWAGE SERVICES RUN TO SITE
- INSTALL NEW TOWER & SITE GROUNDING SYSTEM
- INSTALL NEW VZW SUBSURFACE GROUNDING SYSTEM
- INSTALL A NEW VZW CONCRETE EQUIPMENT AND GENERATOR PADS
- INSTALL VZW ICE BRIDGE AND FOUNDATIONS
- INSTALL VZW EQUIPMENT H–FRAME AND FOUNDATIONS
- INSTALL ELECTRICAL SERVICE CONDUIT WITH PULL TAPES FROM ILC ENCLOSURE STUB–UP TO UTILITY H–FRAME
- INSTALL NEW CONDUITS WITH PULL TAPES FROM VZW ILC STUB–UP LOCATION TO THE GENERATOR STUB–UP AT VZW GENERATOR PAD
- INSTALL (2) 1–1/4" SMOOTHWALL SDR–11 HDPE FIBER OPTIC CONDUITS w/PULL TAPES AND TRACER WIRE FROM **"VERIZON WIRELESS ONLY"** HAND HOLE OUTSIDE COMPOUND TO VZW EQUIPMENT PAD
- INSTALL (3) NEW **"VERIZON WIRELESS ONLY"** 1–1/4" SMOOTHWALL SDR–11 HDPE FIBER OPTIC CONDUITS WITH PULL TAPES AND TRACER WIRE FROM NEW **"VERIZON WIRELESS ONLY"** 24"X36" HAND HOLE OUTSIDE COMPOUND TO NEW **"VERIZON WIRELESS ONLY" 24"X36"** HAND HOLE AT R.O.W.
- PERMANENT ELECTRIC POWER MUST BE AVAILABLE FOR **VERIZON WIRELESS** AT THE METER BASE PRIOR TO THE SITE BEING RELEASED AS TENANT READY

VERIZON WIRELESS SCOPE **(VZW GC)**:
- INSTALL VZW PREFABRICATED CANOPY AND FOUNDATIONS
- INSTALL VZW ANTENNA MOUNTING SUPPORT STRUCTURE ON TOWER
- INSTALL VZW ANTENNAS, LINES, COAX, GPS ANTENNA AND RADIO EQUIPMENT
- INSTALL EXISTING SUBSURFACE GROUND LEADS TO VZW EQUIPMENT & FACILITIES
- INSTALL VZW ELECTRIC SERVICE CONDUCTORS FROM UTILITY H–FRAME TO VZW ILC ENCLOSURE
- INSTALL NEW CONDUITS WITH PULL TAPES FROM RF CABINET TO OVP H–FRAME LIT FIBER LOCATION
- INSTALL NEW CONDUITS AND CIRCUITS FROM VZW ILC ENCLOSURE TO EQUIPMENT ENCLOSURES AT VZW EQUIPMENT PAD
- INSTALL VZW GENERATOR CIRCUITS FROM VZW ILC & EQUIPMENT ENCLOSURES TO VZW GENERATOR
- INSTALL NEW OUTDOOR OVPs AND CABLING ON VERIZON EQUIPMENT H–FRAME

APPLICABLE CODES

ALL WORK AND MATERIALS SHALL BE PERFORMED AND INSTALLED IN ACCORDANCE WITH THE CURRENT EDITIONS OF THE FOLLOWING CODES AS ADOPTED BY THE LOCAL GOVERNING AUTHORITIES. NOTHING IN THESE PLANS IS TO BE CONSTRUCTED TO PERMIT WORK NOT CONFORMING TO THESE CODES.

BUILDING CODE	2018 KENTUCKY BUILDING CODE (IBC 2015)
STRUCTURAL CODE	TIA/EIA–222 – REVISION G (INCLUDES ADDENDUM #2)
MECHANICAL CODE	2015 INTERNATIONAL MECHANICAL CODE (IMC 2015)
PLUMBING CODE	KENTUCKY STATE PLUMBING CODE (815 KAR CHAP. 20)
ELECTRICAL CODE	2017 NATIONAL ELECTRICAL CODE (NEC) – NFPA 70
FIRE/LIFE SAFETY CODE	2015 INTERNATIONAL FIRE CODE (2015 IFC)
ENERGY CODE	2012 INTERNATIONAL ENERGY CODE (COMMERCIAL)
GAS CODE	2012 NATIONAL FUEL GAS CODE (NFPA 54)

ACCESSIBILITY REQUIREMENTS:
FACILITY IS UNMANNED AND NOT FOR HUMAN HABITATION. HANDICAPPED ACCESS REQUIREMENTS ARE NOT REQUIRED IN ACCORDANCE WITH THE 2015 IBC BUILDING CODE.

CONSULTANT TEAM

SURVEYOR
FASTAN
1012 S 4TH STREET, SUITE 101
LOUISVILLE, KY 40203

ELECTRICAL
SOUTH KENTUCKY RECC

ENGINEER
DMITRIY ALBUL, P.E.
OFFICE PH: (716) 800–1364
MOBILE PH: (716) 650–8147
EMAIL: DALBUL@ALBULENG.COM

ELECTRICAL UTILITY COORDINATION IS NOT FINALIZED. DO NOT PROCEED WITH CONSTRUCTION.

SHEET NUMBER	DESCRIPTION
T–1	PROJECT INFORMATION, SITE MAPS, SHEET INDEX
LS–1	SURVEY PLAN
LS–2	SURVEY PLAN
LS–3	SURVEY PLAN
CIVIL	
C–0	OVERALL SITE PLAN
C–1	OVERALL SITE PLAN w/AERIAL OVERLAY
C–1A	OVERALL SITE PLAN w/TOWER LEG DISTANCE TO PROPERTY LINES
C–1B	OVERALL SITE PLAN w/TOWER LEG DISTANCE TO RESIDENTIAL STRUCTURES
C–2	GRADING AND E&S CONTROL PLAN
C–3	DETAILED SITE PLAN
C–4	DIMENSIONED SITE PLAN
C–5	DETAILED EQUIPMENT PAD PLAN
C–6	GENERAL SITE CONSTRUCTION NOTES
C–7	BEST MANAGEMENT PRACTICES & EROSION CONTROL DETAILS AND NOTES
SITE DETAILS	
D–1	FENCE DETAILS AND NOTES
D–2	SITE DETAILS
D–3	EQUIPMENT PAD & CANOPY ELEVATIONS
D–4	VERIZON WIRELESS SIGNAGE (REFERENCE ONLY)
D–5	TOWER OWNER SITE FENCE SIGNAGE (REFERENCE ONLY)
STRUCTURAL	
S–1	EQUIPMENT PAD FOUNDATION PLAN, DETAILS AND STRUCTURAL NOTES
S–2	ICE BRIDGE PLAN AND DETAILS
S–3	FOUNDATION PLAN AND DETAILS
TOWER ELEVATION	
TE–1	TOWER ELEVATION
ELECTRICAL	
E–1	SITE UTILITY PLAN
E–2	PANEL SCHEDULE, ONE LINE DIAGRAM, ELECTRICAL NOTES AND DETAILS
E–3	EQUIPMENT PAD UTILITY PLAN & EQUIPMENT PAD TRENCH SECTIONS
E–4	OVP & INTEGRATED LOAD CENTER H–FRAME ELEVATIONS AND DETAILS
E–5	ELECTRICAL DETAILS
E–6	EQUIPMENT CABINET ELEVATIONS
E–7	EQUIPMENT PAD LIGHTING PLAN
E–8	ALARMING TABLE, DIAGRAMS AND DETAILS (REFERENCE ONLY)
E–9	ALARM AND FIBER CABLE ROUTING (REFERENCE ONLY)
GROUNDING	
G–1	GROUNDING SITE PLAN
G–2	GROUNDING NOTES
G–3	VERIZON WIRELESS GROUNDING PLAN AND NOTES
G–4	GROUNDING DETAILS
G–5	GROUNDING DETAILS
G–6	GROUNDING DETAILS
REFERENCE DRAWINGS	
RF–1	ANTENNA PLAN AND DETAILS (REFERENCE ONLY)
REF–1	GENERATOR SPECIFICATIONS (REFERENCE ONLY)
PSC MAP	
PSC MAP –1	
PSC MAP –2	

VICINITY MAP

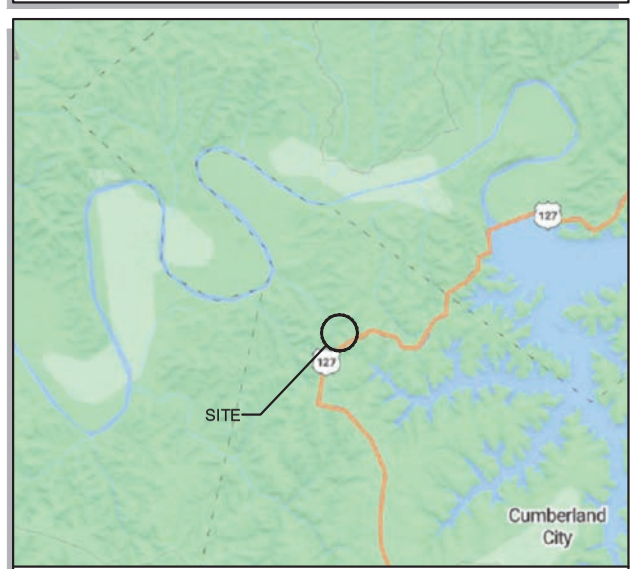

LOCATION MAP

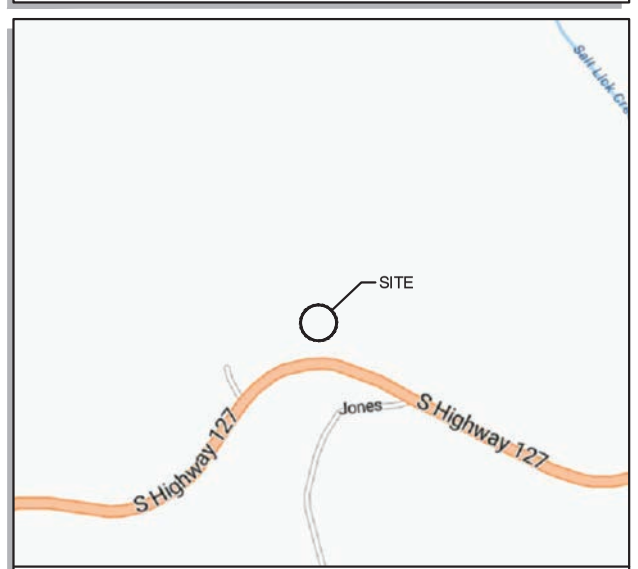

AERIAL

TOWERCOM
241 ATLANTIC BLVD, STE 201
NEPTUNE BEACH, FL 32266

LAB
49030 Pontiac Trail, Suite 100
Wixom, Michigan 48393
PHONE: (248) 705-9212

REV.	DATE	DESCRIPTION
A	08/09/23	ISSUED FOR REVIEW
B	08/21/23	REVISED CD
0	08/24/23	FINAL CD
1	01/25/24	REVISED FINAL CD
2	05/29/24	REVISED FINAL CD
3	02/20/25	REVISED FINAL CD

STATE OF KENTUCKY
DMITRIY V. ALBUL
25093
LICENSED PROFESSIONAL ENGINEER
02-21-25

SITE INFORMATION:
CK AGEE RIDGE
13401 N. HWY 127
ALBANY, KY 42602
CLINTON COUNTY

SITE NUMBER:
724991

SITE NAME:
CK AGEE RIDGE

PID NUMBER: 16933258

DRAWN BY: RC
CHECKED BY: PL
DATE: 08.09.23

SHEET TITLE:
PROJECT INFORMATION, SITE MAPS, SHEET INDEX

SHEET NUMBER:
T–1

MK PAD & CANOPY REV 4.3.1 02/03/25

SHEET 1

S1/1 – PREMISES

S1/2 – TITLE NOTES

S1/3 – FLOOD ZONE DATA

S1/4 – VICINITY MAP

COORDINATE POINT LOCATION

NAD 1983
LATITUDE: 36° 50' 43.33" N
LONGITUDE: 85° 11' 00.66" W
NAVD 1988
ELEVATION: 994.8
SINGLE STATE PLANE COORDINATE (BLUE MARBLE GEOGRAPHIC CALCULATOR VERSION 3.0)
NORTHING: 3467785.199
EASTING: 5087025.536

PROJECT BENCHMARK

NORTH: 3467613.029
EAST: 5087106.117
ELEVATION: 980.51
LOCATION: BEING A 5/8" REBAR W/CAP STAMPED "CONTROL PNT." 126' SOUTHEAST OF THE SOUTHEAST CORNER OF THE LEASE AREA.

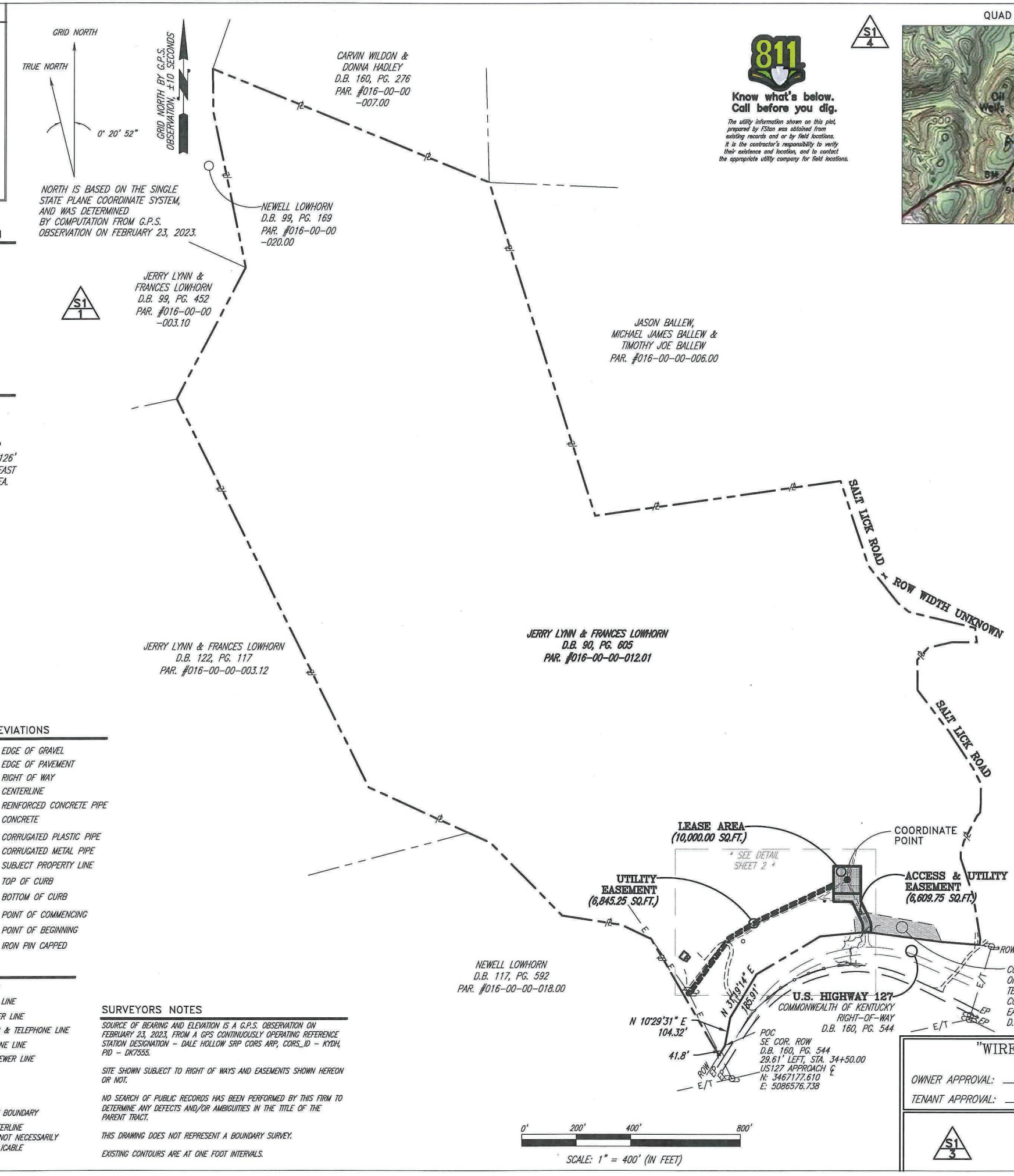

811
Know what's below. Call before you dig.

The utility information shown on this plat, prepared by FSTan was obtained from existing records and or by field locations. It is the contractor's responsibility to verify their existence and location, and to contact the appropriate utility company for field locations.

QUAD MAP SCALE: 1" = 2000'

LOCATION DESCRIPTION

LOCATED ON THE PROPERTY CONVEYED TO JERRY LYNN & FRANCES LOWHORN IN DEED BOOK 90, PAGE 605, , AND BE LOCATED ON US HIGHWAY 127, 2.5 MILES SOUTHWEST OF WOLF CREEK DAM OF LAKE CUMBERLAND, CLINTON COUNTY, KENTUCKY.

THIS SITE IS LOCATED ON THE WOLF CREEK DAM KENNTUCKY USGS QUADRANGLE SHEET.

The horizontal datum (coordinates) is referenced to the North American Datum 1983 (NAD 83) and is expressed in terms of Latitude and Longitude in degrees, minutes, seconds, and decimal parts thereof, and is accurate to within 15 feet horizontally. The site vertical datum (elevations and benchmark) is in terms of the North American Vertical Datum of 1988 (NAVD 88) and is accurate to within +/- 3 feet vertically.

SURVEYOR'S REVIEW OF "SPECIAL EXCEPTIONS"

NOTES CORRESPONDING TO THE FIDELITY NATIONAL TITLE INSURANCE COMPANY, "REPORT OF TITLE", ORDER NUMBER: 38030616 AND REFERENCE NUMBER: CK AGEE RIDGE, EFFECTIVE DATE: 10/20/2022.

2. Terms and conditions of Oil and Gas Lease by and between Jerry Lowhorn and wife, Frances Lowhorn, and Reuben Leveridge, recorded on May 25, 2006 in Deed Book 82, Page 26. *(BLANKET LEASE DOES AFFECT THE LEASE AREA, THE ACCESS & UTILITY EASEMENT AND THE UTILITY EASEMENT SHOWN PER THIS SURVEY)*

3. Real Estate Mortgage from Jerry Lynn Lowhorn and his wife Frances Lowhorn, Grantor(s), in favor of Monticello Banking Company, a banking corporation, dated May 22, 2020, and recorded May 26, 2020 in Deed Book 195, Page 475, in the original amount of $165,286.70. *(NOT A SURVEY ISSUE)*

4. Property conveyed to Commonwealth of Kentucky from Jerry Lynn Lowhorn, and Frances Lowhorn by deed of conveyance dated December 15, 2017 and recorded January 9, 2018 in Deed Book 160, Page 544. *(DOES NOT AFFECT THE LEASE AREA, THE ACCESS & UTILITY EASEMENT OR THE UTILITY EASEMENT SHOWN PER THIS SURVEY)*

STATE OF KENTUCKY
FRANK L. SELLINGER
3282
LICENSED PROFESSIONAL LAND SURVEYOR

SYMBOL LEGEND

- WOOD POWER POLE
- CONCRETE POWER POLE
- METAL TRAFFIC POLE
- LIGHT POLE
- GUY POLE
- TELEPHONE PEDESTAL
- GUY ANCHOR
- MANHOLE
- WATER VALVE
- WATER METER
- FIRE HYDRANT
- ELECTRIC BOX
- F.P. FENCE POST
- XXX.XX SPOT ELEVATION
- SET #5 REBAR (UNLESS OTHERWISE NOTED)
- EXISTING #5 REBAR (UNLESS OTHERWISE NOTED)

ABBREVIATIONS

EG	EDGE OF GRAVEL
EP	EDGE OF PAVEMENT
ROW	RIGHT OF WAY
℄	CENTERLINE
RCP	REINFORCED CONCRETE PIPE
CONC	CONCRETE
CPP	CORRUGATED PLASTIC PIPE
CMP	CORRUGATED METAL PIPE
⅊	SUBJECT PROPERTY LINE
TC	TOP OF CURB
BC	BOTTOM OF CURB
POC	POINT OF COMMENCING
POB	POINT OF BEGINNING
IPC	IRON PIN CAPPED

LINE LEGEND

- OVERHEAD ELECTRIC
- UNDERGROUND GAS LINE
- UNDERGROUND WATER LINE
- OVERHEAD ELECTRIC & TELEPHONE LINE
- OVERHEAD TELEPHONE LINE
- DRAINAGE/STORM SEWER LINE
- EXISTING FENCE
- PROPOSED FENCE
- ℄ DITCH / SWALE
- SUBJECT PROPERTY BOUNDARY
- RIGHT OF WAY CENTERLINE

NOTE: SYMBOLS, ABBREVIATIONS, OR LINESTYLES DO NOT NECESSARILY APPEAR ON DRAWING(S). USE ONLY AS APPLICABLE

SURVEYORS NOTES

SOURCE OF BEARING AND ELEVATION IS A G.P.S. OBSERVATION ON FEBRUARY 23, 2023, FROM A GPS CONTINUOUSLY OPERATING REFERENCE STATION DESIGNATION – DALE HOLLOW SRP CORS ARP, CORS_ID – KY0H, PID – DK7555.

SITE SHOWN SUBJECT TO RIGHT OF WAYS AND EASEMENTS SHOWN HEREON OR NOT.

NO SEARCH OF PUBLIC RECORDS HAS BEEN PERFORMED BY THIS FIRM TO DETERMINE ANY DEFECTS AND/OR AMBIGUITIES IN THE TITLE OF THE PARENT TRACT.

THIS DRAWING DOES NOT REPRESENT A BOUNDARY SURVEY.

EXISTING CONTOURS ARE AT ONE FOOT INTERVALS.

LAND SURVEYOR'S CERTIFICATE

TYPE "A" SURVEY: UNADJUSTED TRAVERSE CLOSURE BETTER THAN 1 IN 10,000.

TO ALL PARTIES INTERESTED IN TITLE TO PREMISES SURVEYED
I hereby certify that this plat and survey were made under my supervision, and that the angular and linear measurements, as witnessed by monuments shown hereon, are true and correct to the best of my knowledge and belief.
This survey and plat meets or exceeds the minimum standards of the governing authorities.
This property is subject to any recorded easements or right of ways not shown hereon.

Frank L. Sellinger, KY. Reg. No. 3282 — 3-17-23

"WIRELESS COMMUNICATION SITE SURVEY"

OWNER APPROVAL: _____ DATE: _____

TENANT APPROVAL: _____ DATE: _____

I HAVE REVIEWED THE FLOOD INSURANCE RATE MAPS (FIRM) MAP NO. 21053C0035C DATED 07/22/2010 AND THE LEASE AREA DOES NOT APPEAR TO BE IN A FLOOD PRONE AREA. THE LEASE AREA IS LOCATED IN ZONE "X".

PREPARED FOR:

verizon
Verizon Wireless

SMJ INTERNATIONAL

FSTAN

1012 S 4th Street, Suite 101
Louisville, Ky 40203
Phone: (502) 636-5111
Fax: (502) 636-5263

SITE NUMBER: 724991

SITE NAME: CK AGEE RIDGE

SITE ADDRESS: HWY 127 ALBANY, KY 42602

LEASE AREA: 10,000.00 SQ.FT.

PROPERTY OWNER: JERRY LYNN & FRANCES LOWHORN 1406 SPECK RD ALBANY, KY 42602

PARCEL NUMBER: 016-00-00-012.01

SOURCE OF TITLE: D.B. 90, PG. 605

DWG BY: SNS	FIELD DATE:	DRAFT DATE:
CHKD BY: FLS	02.23.23	03.14.23

FSTAN PROJECT NO.: 22-11665

SHEET 1 OF 3

REVISIONS:

RAWLAND

SHEET 2

- S2/1 – PREMISES
- S2/2 – LEGAL DESCRIPTIONS
- S2/3 – FLOOD ZONE DATA
- S2/4 – VICINITY MAP

GRID NORTH

TRUE NORTH

0° 20' 52"

GRID NORTH BY G.P.S. OBSERVATION, ±10 SECONDS

NORTH IS BASED ON THE SINGLE STATE PLANE COORDINATE SYSTEM, AND WAS DETERMINED BY COMPUTATION FROM G.P.S. OBSERVATION ON FEBRUARY 23, 2023.

811

Know what's below. Call before you dig.

The utility information shown on this plat, prepared by FStan was obtained from existing records and or by field locations. It is the contractor's responsibility to verify their existence and location, and to contact the appropriate utility company for field locations.

S2/1

COORDINATE POINT LOCATION

NAD 1983
LATITUDE: 36° 50' 43.33" N
LONGITUDE: 85° 11' 00.66" W
NAVD 1988
ELEVATION: 994.8
SINGLE STATE PLANE COORDINATE (BLUE MARBLE GEOGRAPHIC CALCULATOR VERSION 3.0)
NORTHING: 3467785.199
EASTING: 5087025.536

PROJECT BENCHMARK

NORTH: 3467613.029
EAST: 5087106.117
ELEVATION: 980.51
LOCATION: BEING A 5/8" REBAR W/CAP STAMPED "CONTROL PNT." 126' SOUTHEAST OF THE SOUTHEAST CORNER OF THE LEASE AREA.

LINE	BEARING	DISTANCE
L1	N 04°36'13" E	13.76'
L2	N 00°00'00" W	30.00'
L3	S 00°00'00" E	28.48'
L4	S 04°36'13" W	11.87'
L5	N 82°24'37" W	15.19'
L6	S 84°21'27" W	15.07'
L7	S 44°45'44" W	19.15'
L8	N 45°14'16" W	10.00'
L9	N 44°45'44" E	18.37'
L10	N 00°00'00" W	25.32'
L11	S 00°00'00" E	11.06'

CURVE	RADIUS	CHORD BEARING	CHORD LENGTH
C1	50.00'	N 10°35'25" W	26.21'
C2	80.00'	S 10°35'25" E	41.93'

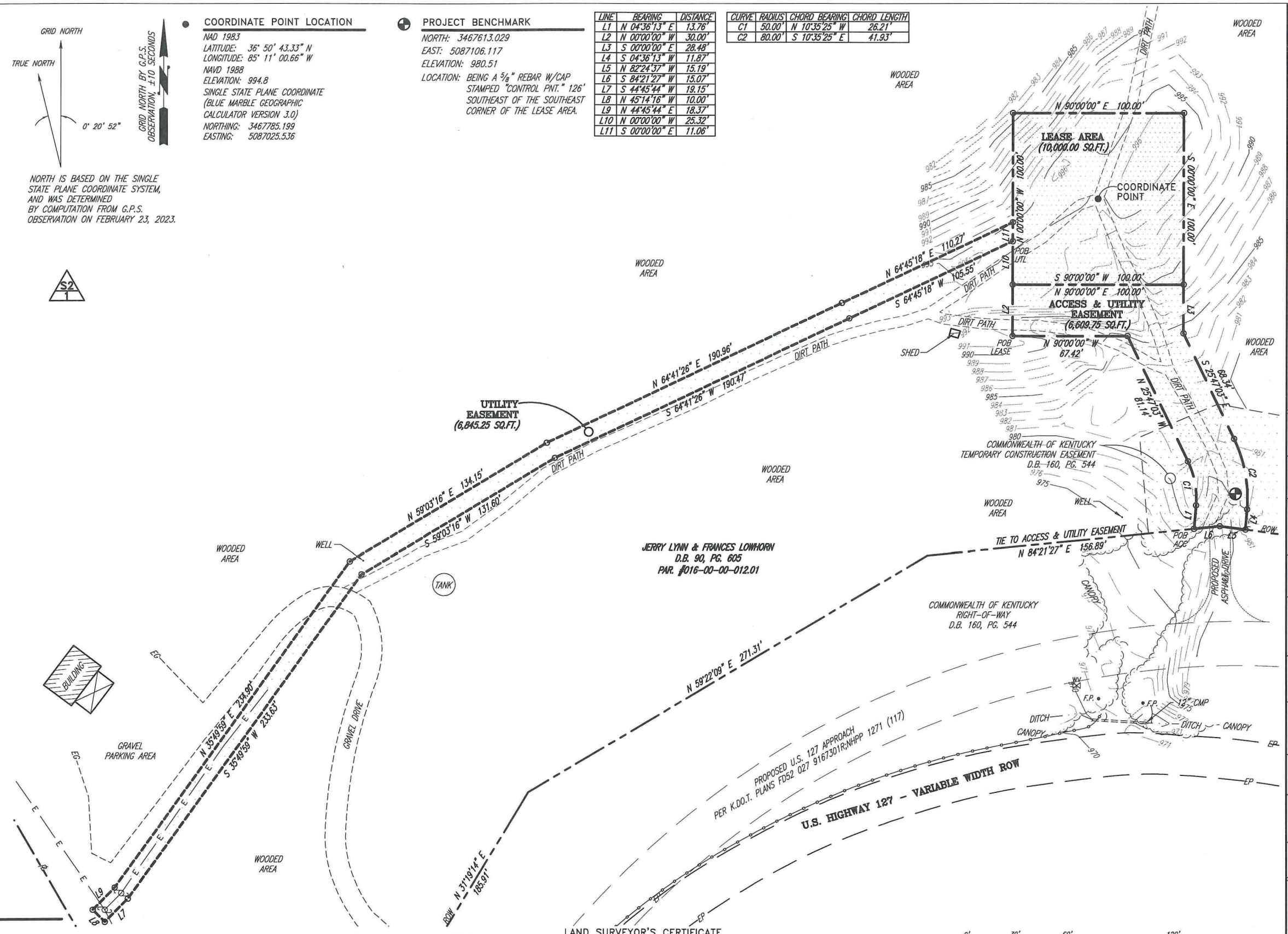

SYMBOL LEGEND

- WOOD POWER POLE
- CONCRETE POWER POLE
- METAL TRAFFIC POLE
- LIGHT POLE
- GUY POLE
- TELEPHONE PEDESTAL
- GUY ANCHOR
- MANHOLE
- WATER VALVE
- WATER METER
- FIRE HYDRANT
- ELECTRIC BOX
- F.P. FENCE POST
- XXX.XX SPOT ELEVATION
- SET #5 REBAR (UNLESS OTHERWISE NOTED)
- EXISTING #5 REBAR (UNLESS OTHERWISE NOTED)

ABBREVIATIONS

EG	EDGE OF GRAVEL
EP	EDGE OF PAVEMENT
ROW	RIGHT OF WAY
℄	CENTERLINE
RCP	REINFORCED CONCRETE PIPE
CONC	CONCRETE
CPP	CORRUGATED PLASTIC PIPE
CMP	CORRUGATED METAL PIPE
PL	SUBJECT PROPERTY LINE
TC	TOP OF CURB
BC	BOTTOM OF CURB
POC	POINT OF COMMENCING
POB	POINT OF BEGINNING
IPC	IRON PIN CAPPED

LINE LEGEND

- E — OVERHEAD ELECTRIC
- G — UNDERGROUND GAS LINE
- W — UNDERGROUND WATER LINE
- E/T — OVERHEAD ELECTRIC & TELEPHONE LINE
- T — OVERHEAD TELEPHONE LINE
- D — DRAINAGE/STORM SEWER LINE
- X — EXISTING FENCE
- XX — PROPOSED FENCE
- ℄ DITCH / SWALE
- SUBJECT PROPERTY BOUNDARY
- RIGHT OF WAY CENTERLINE

NOTE: SYMBOLS, ABBREVIATIONS, AND LINESTYLES DO NOT NECESSARILY APPEAR ON DRAWING(S). USE ONLY AS APPLICABLE

SURVEYORS NOTES

SOURCE OF BEARING AND ELEVATION IS A G.P.S. OBSERVATION ON FEBRUARY 23, 2023, FROM A GPS CONTINUOUSLY OPERATING REFERENCE STATION DESIGNATION – DALE HOLLOW SRP CORS ARP, CORS_ID – KYDH, PID – DK7555.

SITE SHOWN SUBJECT TO RIGHT OF WAYS AND EASEMENTS SHOWN HEREON OR NOT.

NO SEARCH OF PUBLIC RECORDS HAS BEEN PERFORMED BY THIS FIRM TO DETERMINE ANY DEFECTS AND/OR AMBIGUITIES IN THE TITLE OF THE PARENT TRACT.

THIS DRAWING DOES NOT REPRESENT A BOUNDARY SURVEY.

EXISTING CONTOURS ARE AT ONE FOOT INTERVALS.

STATE OF KENTUCKY
FRANK L. SELLINGER 3282
LICENSED PROFESSIONAL LAND SURVEYOR

LAND SURVEYOR'S CERTIFICATE

TYPE "A" SURVEY: UNADJUSTED TRAVERSE CLOSURE BETTER THAN 1 IN 10,000.

TO ALL PARTIES INTERESTED IN TITLE TO PREMISES SURVEYED
I hereby certify that this plat and survey were made under my supervision, and that the angular and linear measurements, as witnessed by monuments shown hereon, are true and correct to the best of my knowledge and belief.
This survey and plat meets or exceeds the minimum standards of the governing authorities.
This property is subject to any recorded easements or right of ways not shown hereon.

3-17-23

Frank L. Sellinger, II — KY. Reg. No. 3282

0' 30' 60' 120'

SCALE: 1" = 60' (IN FEET)

"WIRELESS COMMUNICATION SITE SURVEY"

OWNER APPROVAL: _____ DATE: _____

TENANT APPROVAL: _____ DATE: _____

S2/3

I HAVE REVIEWED THE FLOOD INSURANCE RATE MAPS (FIRM) MAP NO. 21053C0035C DATED 07/22/2010 AND THE LEASE AREA DOES NOT APPEAR TO BE IN A FLOOD PRONE AREA. THE LEASE AREA IS LOCATED IN ZONE "X".

PREPARED FOR:

verizon
Verizon Wireless

SMJ INTERNATIONAL

FSTAN

1012 S 4th Street, Suite 101
Louisville, Ky 40203
Phone: (502) 636-5111
Fax: (502) 636-5263

SITE NUMBER: 724991

SITE NAME: CK AGEE RIDGE

SITE ADDRESS: HWY 127 ALBANY, KY 42602

LEASE AREA: 10,000.00 SQ.FT.

PROPERTY OWNER: JERRY LYNN & FRANCES LOWHORN 1406 SPECK RD ALBANY, KY 42602

PARCEL NUMBER: 016-00-00-012.01

SOURCE OF TITLE: D.B. 90, PG. 605

DWG BY: SNS	FIELD DATE:	DRAFT DATE:
CHKD BY: FLS	02.23.23	03.14.23

FSTAN PROJECT NO.: 22-11665

SHEET 2 OF 3

REVISIONS:

RAWLAND

SHEET 3

S3 1 – LEGAL DESCRIPTIONS (LEASE AREA)

S3 2 – LEGAL DESCRIPTIONS (ACCESS ESMT)

S3 3 – LEGAL DESCRIPTIONS (UTILITY ESMT)

S3 4 – LEGAL DESCRIPTIONS (PARENT TRACT)

LEGAL DESCRIPTIONS:

This is a description for Verizon Wireless, of a lease area to be located on the property conveyed to Jerry Lynn & Frances Lowhorn in Deed Book 90, Page 605, and be located on US Highway 127, 2.5 miles southwest of Wolf Creek Dam at Lake Cumberland, Clinton County, Kentucky which is further described as follows:

S3 1 LEASE AREA

Being on the property conveyed to Jerry Lynn & Frances Lowhorn in Deed Book 90, Page 605, and being located on US Highway 127, 2.5 miles southwest of Wolf Creek Dam at Lake Cumberland, Clinton County, Kentucky which is further described as follows:

Commencing at the southwest corner of the U.S. 127 right-of-way conveyed to the Commonwealth of Kentucky in Deed Book 160, Page 544, and being 29.61' left of the centerline of the U.S. Highway 127 Approach Station Number 34-50.00 as shown on Highway Plans Number FD52 027 9167301R;NHPP 1271 (117), and being 41.8' northeast measured along the existing right-of-way of said U.S. 127 from the southwest corner of said Lowhorn property;

Thence with the north right-of way line of said U.S. 127 and the south line of said Lowhorn property for the next four (4) calls: (1) N 10°29'31" E – 104.32' to a point;

Thence (2) N 31°19'14" E – 185.91' to a point;

Thence (3) N 59°22'09" E – 271.31' to a point;

Thence (4) N 84°21'27" E – 156.89' to a set iron rod with a cap stamped "FStan 3282", and being the southwest corner of the Access & Utility Easement;

Thence leaving said U.S. 127 and traversing said Lowhorn property with the perimeter of said Access & Utility Easement for the next five (5) calls: (1) N 04°36'13" E – 13.76' to a set iron rod with a cap stamped "FStan 3282";

Thence (2) along a curve to the left with a radius of 50.00' and a chord of N 10°35'25" W – 26.21' to a set iron rod with a cap stamped "FStan 3282";

Thence (3) N 25°47'03" W – 81.14' to a set iron rod with a cap stamped "FStan 3282";

Thence (4) N 90°00'00" W – 67.42' to a set iron rod with a cap stamped "FStan 3282";

Thence (5) N 00°00'00" W – 30.00' to a set iron rod with a cap stamped "FStan 3282", and being the True Point of Beginning of the Lease Area;

Thence leaving said Access & Utility Easement N 00°00'00" W – 100.00' to a set iron rod with a cap stamped "FStan 3282";

Thence N 90°00'00" E – 100.00' to a set iron rod with a cap stamped "FStan 3282";

Thence S 00°00'00" E – 100.00' to a set iron rod with a cap stamped "FStan 3282";

Thence S 90°00'00" W – 100.00' to the point of beginning, containing 10,000.00 square feet as per survey by Frank L. Sellinger, II dated March 14, 2023.

S3 2 ACCESS & UTILITY EASEMENT

Being on the property conveyed to Jerry Lynn & Frances Lowhorn in Deed Book 90, Page 605, and being located on US Highway 127, 2.5 miles southwest of Wolf Creek Dam at Lake Cumberland, Clinton County, Kentucky which is further described as follows:

Commencing at the southwest corner of the U.S. 127 right-of-way conveyed to the Commonwealth of Kentucky in Deed Book 160, Page 544, and being 29.61' left of the centerline of the U.S. Highway 127 Approach Station Number 34-50.00 as shown on Highway Plans Number FD52 027 9167301R;NHPP 1271 (117), and being 41.8' northeast measured along the existing right-of-way of said U.S. 127 from the southwest corner of said Lowhorn property;

Thence with the north right-of way line of said U.S. 127 and the south line of said Lowhorn property for the next four (4) calls: (1) N 10°29'31" E – 104.32' to a point;

Thence (2) N 31°19'14" E – 185.91' to a point;

Thence (3) N 59°22'09" E – 271.31' to a point;

Thence (4) N 84°21'27" E – 156.89' to a set iron rod with a cap stamped "FStan 3282", and being the True Point of Beginning of the Access & Utility Easement;

Thence leaving said U.S. 127 and traversing said Lowhorn property N 04°36'13" E – 13.76' to a set iron rod with a cap stamped "FStan 3282";

Thence along a curve to the left with a radius of 50.00' and a chord of N 10°35'25" W – 26.21' to a set iron rod with a cap stamped "FStan 3282";

Thence N 25°47'03" W – 81.14' to a set iron rod with a cap stamped "FStan 3282";

Thence N 90°00'00" W – 67.42' to a set iron rod with a cap stamped "FStan 3282";

Thence N 00°00'00" W – 30.00' to a set iron rod with a cap stamped "FStan 3282", and being the southwest corner of the Lease Area;

Thence with the south line of said Lease Area N 90°00'00" E – 100.00' to a set iron rod with a cap stamped "FStan 3282", and being the southeast corner of said Lease Area;

Thence leaving said Lease Area S 00°00'00" E – 28.48' to a set iron rod with a cap stamped "FStan 3282";

Thence S 25°47'03" E – 68.34' to a set iron rod with a cap stamped "FStan 3282";

Thence along a curve to the right with a radius of 80.00' of S 10°35'25" E – 41.93' to a set iron rod with a cap stamped "FStan 3282";

Thence S 04°36'13" W – 11.87' to a set iron rod with a cap stamped "FStan 3282" on said U.S. 127 right-of-way;

Thence with said right-of-way for the next two (2) calls: (1) N 82°24'37" W – 15.19' to a point;

Thence (2) S 84°21'27" W – 15.07' to the point of beginning, containing 6,609.75 square feet as per survey by Frank L. Sellinger, II dated March 14, 2023.

S3 2 UTILITY EASEMENT

Being on the property conveyed to Jerry Lynn & Frances Lowhorn in Deed Book 90, Page 605, and being located on US Highway 127, 2.5 miles southwest of Wolf Creek Dam at Lake Cumberland, Clinton County, Kentucky which is further described as follows:

Commencing at the southwest corner of the U.S. 127 right-of-way conveyed to the Commonwealth of Kentucky in Deed Book 160, Page 544, and being 29.61' left of the centerline of the U.S. Highway 127 Approach Station Number 34-50.00 as shown on Highway Plans Number FD52 027 9167301R;NHPP 1271 (117), and being 41.8' northeast measured along the existing right-of-way of said U.S. 127 from the southwest corner of said Lowhorn property;

Thence with the north right-of way line of said U.S. 127 and the south line of said Lowhorn property for the next four (4) calls: (1) N 10°29'31" E – 104.32' to a point;

Thence (2) N 31°19'14" E – 185.91' to a point;

Thence (3) N 59°22'09" E – 271.31' to a point;

Thence (4) N 84°21'27" E – 156.89' to a set iron rod with a cap stamped "FStan 3282", and being the southwest corner of the Access & Utility Easement;

Thence leaving said U.S. 127 and traversing said Lowhorn property with the perimeter of said Access & Utility Easement for the next five (5) calls: (1) N 04°36'13" E – 13.76' to a set iron rod with a cap stamped "FStan 3282";

Thence (2) along a curve to the left with a radius of 50.00' and a chord of N 10°35'25" W – 26.21' to a set iron rod with a cap stamped "FStan 3282";

Thence (3) N 25°47'03" W – 81.14' to a set iron rod with a cap stamped "FStan 3282";

Thence (4) N 90°00'00" W – 67.42' to a set iron rod with a cap stamped "FStan 3282";

Thence (5) N 00°00'00" W – 30.00' to a set iron rod with a cap stamped "FStan 3282", and being the southeast corner of the Lease Area;

Thence leaving said Access & Utility Easement with the west line of said Lease Area N 00°00'00" W – 25.32' to a set iron rod with a cap stamped "FStan 3282", and being the True Point of Beginning of the Utility Easement;

Thence leaving said Lease Area S 64°45'18" W – 105.55' to a set iron rod with a cap stamped "FStan 3282";

Thence S 64°41'26" W – 190.47' to a set iron rod with a cap stamped "FStan 3282";

Thence S 59°03'16" W – 131.60' to a set iron rod with a cap stamped "FStan 3282";

Thence S 35°49'59" W – 233.63' to a set iron rod with a cap stamped "FStan 3282";

Thence S 44°45'44" W – 19.15' to a set iron rod with a cap stamped "FStan 3282";

Thence N 45°14'16" W – 10.00' to a set iron rod with a cap stamped "FStan 3282";

Thence N 44°45'44" E – 18.37' to a set iron rod with a cap stamped "FStan 3282";

Thence N 35°49'59" E – 234.90' to a set iron rod with a cap stamped "FStan 3282";

Thence N 59°03'16" E – 134.15' to a set iron rod with a cap stamped "FStan 3282";

Thence N 64°41'26" E – 190.96' to a set iron rod with a cap stamped "FStan 3282";

Thence N 64°45'18" E – 110.27' to a set iron rod with a cap stamped "FStan 3282" on the west line of said Lease Area;

Thence S 00°00'00" E – 11.06' to the point of beginning, containing 6,845.25 square feet as per survey by Frank L. Sellinger, II dated March 14, 2023.

S3 3 PARENT TRACT DESCRIPTION (PROVIDED BY OTHERS)

Property located in Clinton County, Kentucky

Certain real estate located and being in Clinton, County, Kentucky and more particularly described as follows, to-wit:

Beginning on a elm on the old road; on a flat place; Jason Ballou's line. Thence with his line as follows: N. 85 degrees 00 W. 1122 feet to a marked beech. Thence N. 32 degrees 00 W. 660 feet to a hickory and white oak. Thence N. 04 degrees 00 E. 660 feet to a hickory and white oak. Thence leaving Ballou and with Cummings land N. 64 degrees 00 W. 1090 feet, to a cedar on top of a hill and on the dividing ridge a corner of Bobby Wells, and the dividing ridge as follows: South 166 feet; S. 24 degrees 00 W. 400 feet S. 20 degrees 15 E. 774 feet. S. 02 degrees 00 E. 280 feet, S. 31 degrees 00 E. 500 feet. S. 03 degrees 00 E. 175 feet. S 84 degrees 00 E. 180 feet. S. 63 degrees 00 E. 218 feet. S. 30 degrees 30 E. 240 feet. S. 16 degrees 39' E. 689 feet to the low gap. Thence with the Bell heirs as follows: S. 77 degrees 30 E. 222 feet. S. 59 degrees 30' E. 200 feet. Thence S. 12 degrees 00 W. 630 feet to the edge of the R/W of US 127 this point is 80 feet from the center line. Thence parallel with the center line 1025 feet to the center of an old road. Thence with the center of the road as follows: N. 44 degrees 00 E. 100 feet, N 20 degrees 00 E. 100 feet, N 09 degrees 30 W. 100 feet, N 12 degrees 30' W. 100 feet, N 10
degrees 00 W. 100 feet, N 32 degrees 00 E. 100 feet, N 39 degrees 30 E. 100 feet, N. 12 degrees 30' E. 100 feet, N 25 degrees 30 W. 100 feet, N. 26 degrees 30 W. 100 feet, N. 38 degrees 15 W 100 feet, N 31 degrees 00 W. 100 feet, N. 04 degrees 00' W. 100 feet, N 45 degrees 30' E. 100 feet, N. 88 degrees 00 E. 100 feet, N. 81 degrees 30' E. 50 feet, N. 32 degrees 00 E. 50 feet, N. 25 degrees 00 W. 100 feet, N. 73 degrees 00 W. 100 feet, N. 70 degrees 00 W. 100 feet, N. 27 degrees 00 W. 100 feet, N. 16 degrees 30 W. 100 feet, N 14 degrees 45 W. 100 feet, N. 27 degrees 30' E. 100 feet, N. 50 degrees 00 W. 20 feet to the beginning, containing 96 acres more or less, survey by Charles Campbell. This is a part of Will 4, Page 313.

LESS AND EXCEPT that portion of property conveyed to Commonwealth of Kentucky from Jerry Lynn Lowhorn, and Frances Lowhorn by Deed of Conveyance dated December 15, 2017 and recorded January 9, 2018 in Deed Book 160, Page 544.

AND BEING A PORTION OF the same property conveyed to Jerry Lynn Lowhorn and wife, Frances Lowhorn from Charles Campbell and wife, Nannie Campbell, James Campbell and wife, Florence Campbell, Flora Campbell by Judy C. York, Attorney in Fact, Grace Campbell, a widow and Carlos Mann, a widower by General Warranty Deed dated January 12, 1993 and recorded January 12, 1993 in Deed Book 90, Page 605.

Tax Parcel No. 016-00-00-012.01

STATE OF KENTUCKY
FRANK L. SELLINGER
3282
LICENSED PROFESSIONAL LAND SURVEYOR

LAND SURVEYOR'S CERTIFICATE

TYPE "A" SURVEY: UNADJUSTED TRAVERSE CLOSURE BETTER THAN 1 IN 10,000.

TO ALL PARTIES INTERESTED IN TITLE TO PREMISES SURVEYED
I hereby certify that this plat and survey were made under my supervision, and that the angular and linear measurements, as witnessed by monuments shown hereon, are true and correct to the best of my knowledge and belief.
This survey and plat meets or exceeds the minimum standards of the governing authorities.
This property is subject to any recorded easements or right of ways not shown hereon.

3-17-23

Frank L. Sellinger, II *KY. Reg. No. 3282*

PREPARED FOR:

verizon
Verizon Wireless

SMJ INTERNATIONAL

FSTAN

1012 S 4th Street, Suite 101
Louisville, Ky 40203
Phone: (502) 636-5111
Fax: (502) 636-5263

SITE NUMBER: 724991

SITE NAME: CK AGEE RIDGE

SITE ADDRESS: HWY 127 ALBANY, KY 42602

LEASE AREA: 10,000.00 SQ.FT.

PROPERTY OWNER: JERRY LYNN & FRANCES LOWHORN 1406 SPECK RD ALBANY, KY 42602

PARCEL NUMBER: 016-00-00-012.01

SOURCE OF TITLE: D.B. 90, PG. 605

DWG BY: SNS	FIELD DATE:	DRAFT DATE:
CHKD BY: FLS	02.23.23	03.14.23

FSTAN PROJECT NO.: 22-11665

SHEET 3 OF 3

REVISIONS:

RAWLAND

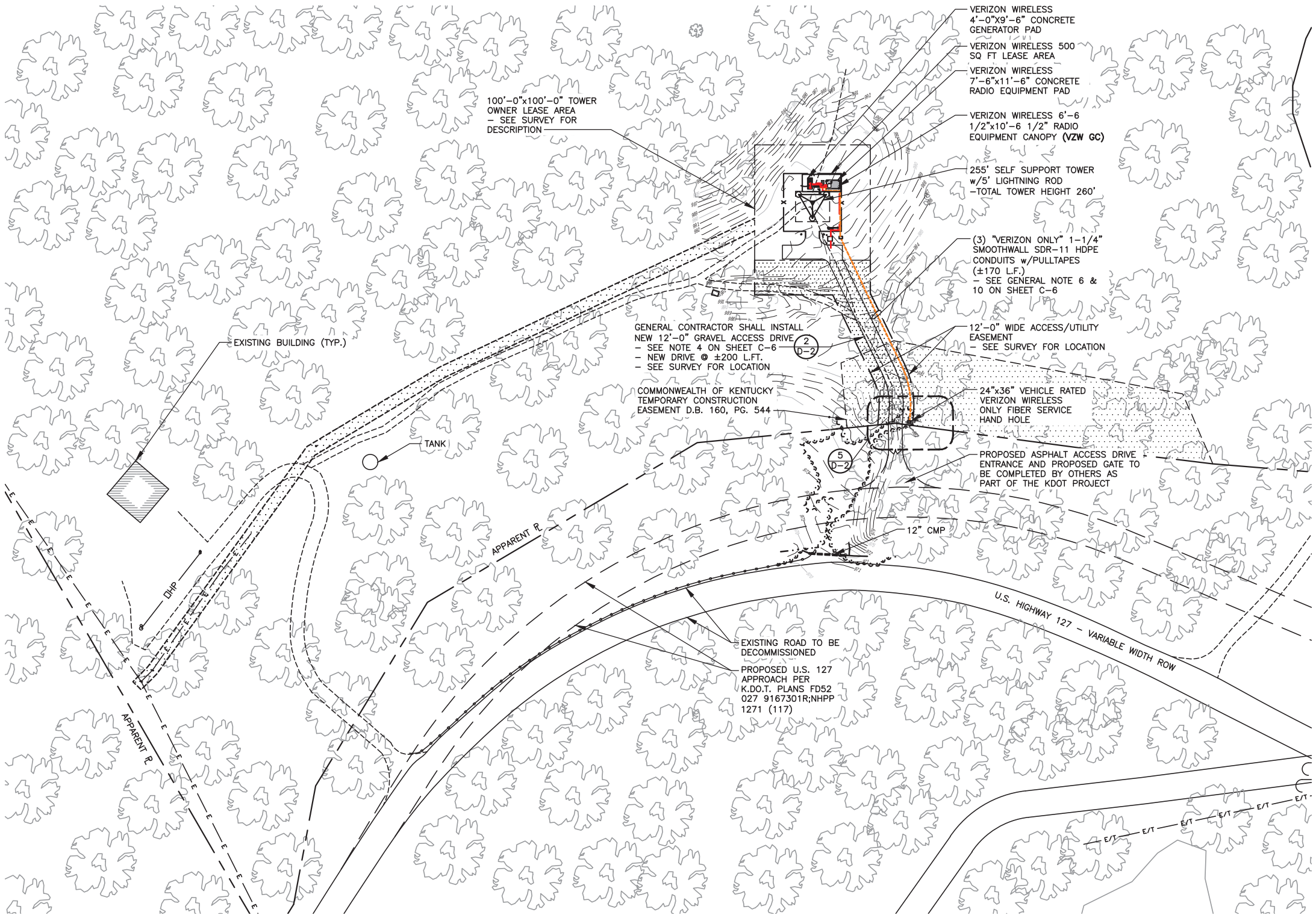

Kentucky 811
Know what's below.
Call before you dig.
Call Monday thru Friday - 7 am. to 6 pm.
1-800-752-6007
PER KENTUCKY STATE LAW, IT IS AGAINST THE LAW TO EXCAVATE WITHOUT NOTIFYING THE UNDERGROUND LOCATION SERVICE TWO (2) WORKING DAYS BEFORE COMMENCING WORK.

GRAPHIC SCALE
100 0 50 100 200

OVERALL SITE PLAN

SCALE: 1" = 100'

NORTH

TOWERCOM
241 ATLANTIC BLVD, STE 201
NEPTUNE BEACH, FL 32266

LAB
49030 Pontiac Trail, Suite 100
Wixom, Michigan 48393
PHONE: (248) 705-9212

REV.	DATE	DESCRIPTION
A	08/09/23	ISSUED FOR REVIEW
B	08/21/23	REVISED CD
0	08/24/23	FINAL CD
1	01/25/24	REVISED FINAL CD
2	05/29/24	REVISED FINAL CD
3	02/20/25	REVISED FINAL CD

STATE OF KENTUCKY
DMITRIY V. ALBUL
25093
LICENSED PROFESSIONAL ENGINEER
02-21-25

SITE INFORMATION:
CK AGEE RIDGE
13401 N. HWY 127
ALBANY, KY 42602
CLINTON COUNTY

SITE NUMBER:
724991

SITE NAME:
CK AGEE RIDGE

PID NUMBER: 16933258
DRAWN BY: RC
CHECKED BY: PL
DATE: 08.09.23

SHEET TITLE:
OVERALL SITE PLAN

SHEET NUMBER:
C-0

MIK PAD & CANOPY REV 4.3.1 02/03/25

Kentucky 811
Know what's below.
Call before you dig.
Call Monday thru Friday - 7 am. to 6 pm.
1-800-752-6007
PER KENTUCKY STATE LAW, IT IS AGAINST THE LAW TO EXCAVATE WITHOUT NOTIFYING THE UNDERGROUND LOCATION SERVICE TWO (2) WORKING DAYS BEFORE COMMENCING WORK.

GRAPHIC SCALE
50 0 25 50 100

OVERALL SITE PLAN W/AERIAL OVERLAY

SCALE: 1" = 50'

NORTH

TOWERCOM
241 ATLANTIC BLVD, STE 201
NEPTUNE BEACH, FL 32266

LAB
49030 Pontiac Trail, Suite 100
Wixom, Michigan 48393
PHONE: (248) 705-9212

REV.	DATE	DESCRIPTION
A	08/09/23	ISSUED FOR REVIEW
B	08/21/23	REVISED CD
0	08/24/23	FINAL CD
1	01/25/24	REVISED FINAL CD
2	05/29/24	REVISED FINAL CD
3	02/20/25	REVISED FINAL CD

STATE OF KENTUCKY
DMITRIY V. ALBUL
25093
LICENSED PROFESSIONAL ENGINEER
02-21-25

SITE INFORMATION:
CK AGEE RIDGE
13401 N. HWY 127
ALBANY, KY 42602
CLINTON COUNTY

SITE NUMBER:
724991

SITE NAME:
CK AGEE RIDGE

PID NUMBER: 16933258

DRAWN BY: RC
CHECKED BY: PL
DATE: 08.09.23

SHEET TITLE:
OVERALL SITE PLAN w/AERIAL OVERLAY

SHEET NUMBER:
C-1

MIK PAD & CANOPY REV 4.3.1 02/03/25

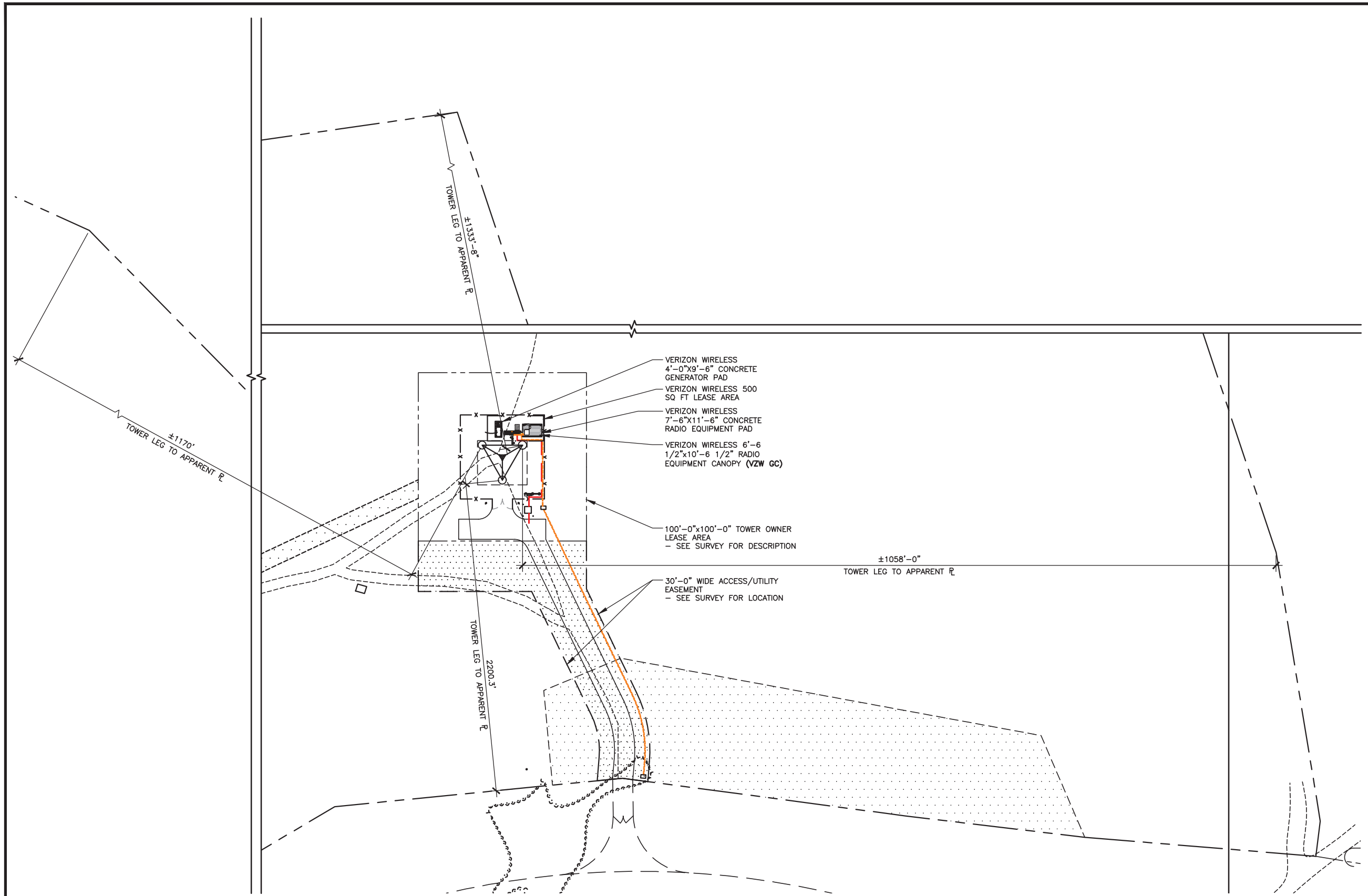

GRAPHIC SCALE

60 0 30 60 120

OVERALL SITE PLAN w/TOWER LEG DISTANCE TO PROPERTY LINES

SCALE: 1" = 60'

NORTH

Kentucky 811
Know what's below.
Call before you dig.
Call Monday thru Friday - 7 am. to 6 pm.
1-800-752-6007
PER KENTUCKY STATE LAW, IT IS AGAINST THE LAW TO EXCAVATE WITHOUT NOTIFYING THE UNDERGROUND LOCATION SERVICE TWO (2) WORKING DAYS BEFORE COMMENCING WORK.

TOWERCOM
241 ATLANTIC BLVD, STE 201
NEPTUNE BEACH, FL 32266

LAB
49030 Pontiac Trail, Suite 100
Wixom, Michigan 48393
PHONE: (248) 705-9212

REV.	DATE	DESCRIPTION
A	08/09/23	ISSUED FOR REVIEW
B	08/21/23	REVISED CD
0	08/24/23	FINAL CD
1	01/25/24	REVISED FINAL CD
2	05/29/24	REVISED FINAL CD
3	02/20/25	REVISED FINAL CD

STATE OF KENTUCKY
DMITRIY V. ALBUL
25093
LICENSED PROFESSIONAL ENGINEER
02-21-25

SITE INFORMATION:
CK AGEE RIDGE
13401 N. HWY 127
ALBANY, KY 42602
CLINTON COUNTY

SITE NUMBER:
724991

SITE NAME:
CK AGEE RIDGE

PID NUMBER: 16933258

DRAWN BY: RC
CHECKED BY: PL
DATE: 08.09.23

SHEET TITLE:
OVERALL SITE PLAN w/TOWER LEG DISTANCE TO PROPERTY LINES

SHEET NUMBER:
C-1A
MK PAD & CANOPY REV 4.3.1 02/03/25

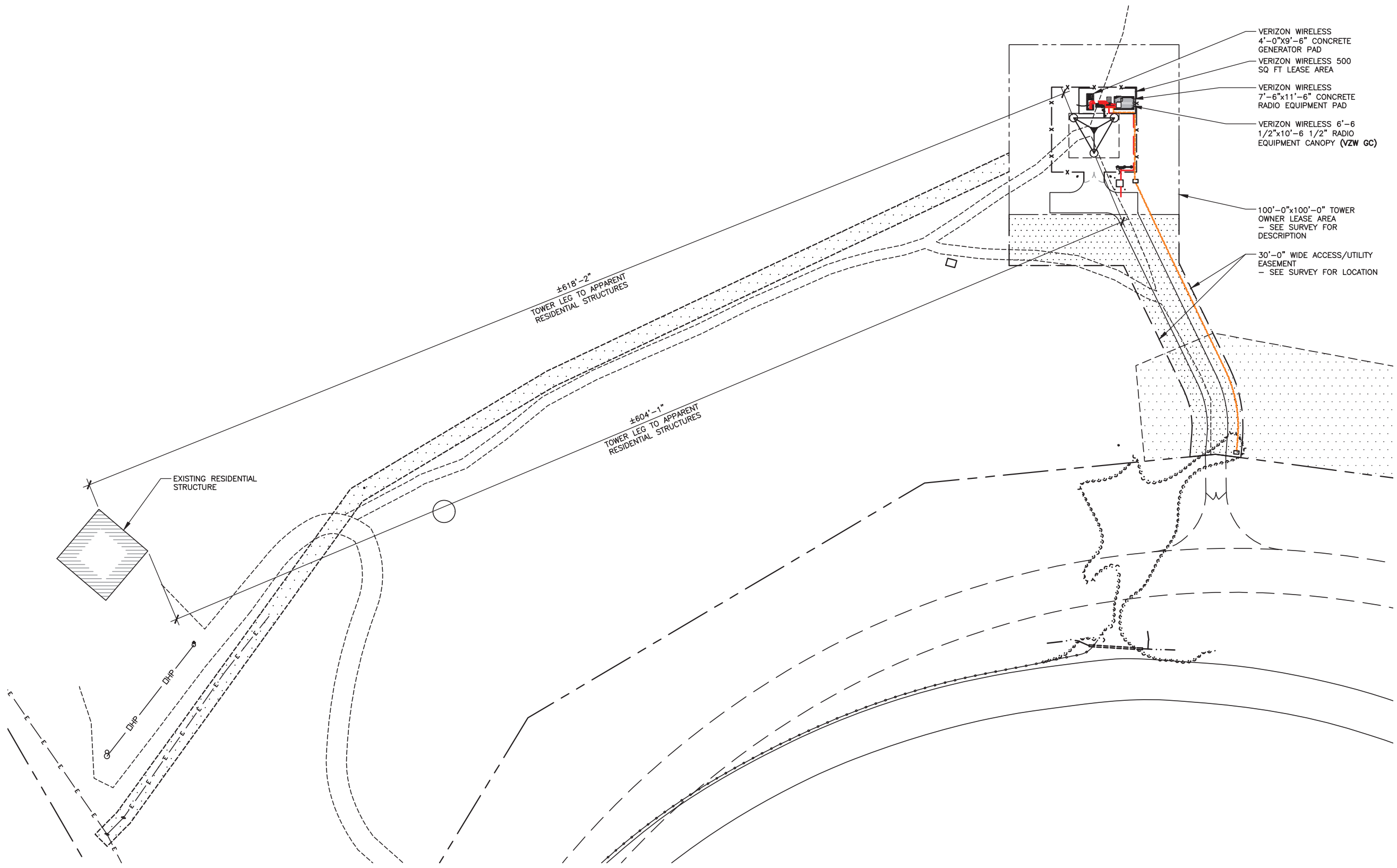

Kentucky 811

Know what's below.
Call before you dig.

Call Monday thru Friday - 7 am. to 6 pm.

1-800-752-6007

PER KENTUCKY STATE LAW, IT IS AGAINST THE LAW TO EXCAVATE WITHOUT NOTIFYING THE UNDERGROUND LOCATION SERVICE TWO (2) WORKING DAYS BEFORE COMMENCING WORK.

GRAPHIC SCALE

60 0 30 60 120

OVERALL SITE PLAN w/TOWER LEG DISTANCE TO RESIDENTIAL STRUCTURES

SCALE: 1" = 60'

NORTH

TOWERCOM

241 ATLANTIC BLVD, STE 201
NEPTUNE BEACH, FL 32266

LAB

49030 Pontiac Trail, Suite 100
Wixom, Michigan 48393
PHONE: (248) 705-9212

REV.	DATE	DESCRIPTION
A	08/09/23	ISSUED FOR REVIEW
B	08/21/23	REVISED CD
0	08/24/23	FINAL CD
1	01/25/24	REVISED FINAL CD
2	05/29/24	REVISED FINAL CD
3	02/20/25	REVISED FINAL CD

STATE OF KENTUCKY
DMITRIY V. ALBUL
25093
LICENSED PROFESSIONAL ENGINEER

02-21-25

SITE INFORMATION:

CK AGEE RIDGE

13401 N. HWY 127
ALBANY, KY 42602
CLINTON COUNTY

SITE NUMBER:
724991

SITE NAME:
CK AGEE RIDGE

PID NUMBER: 16933258

DRAWN BY: RC
CHECKED BY: PL
DATE: 08.09.23

SHEET TITLE:

OVERALL SITE PLAN w/TOWER LEG DISTANCE TO RESIDENTIAL STRUCTURES

SHEET NUMBER:

C-1B

MIK PAD & CANOPY REV 4.3.1 02/03/25

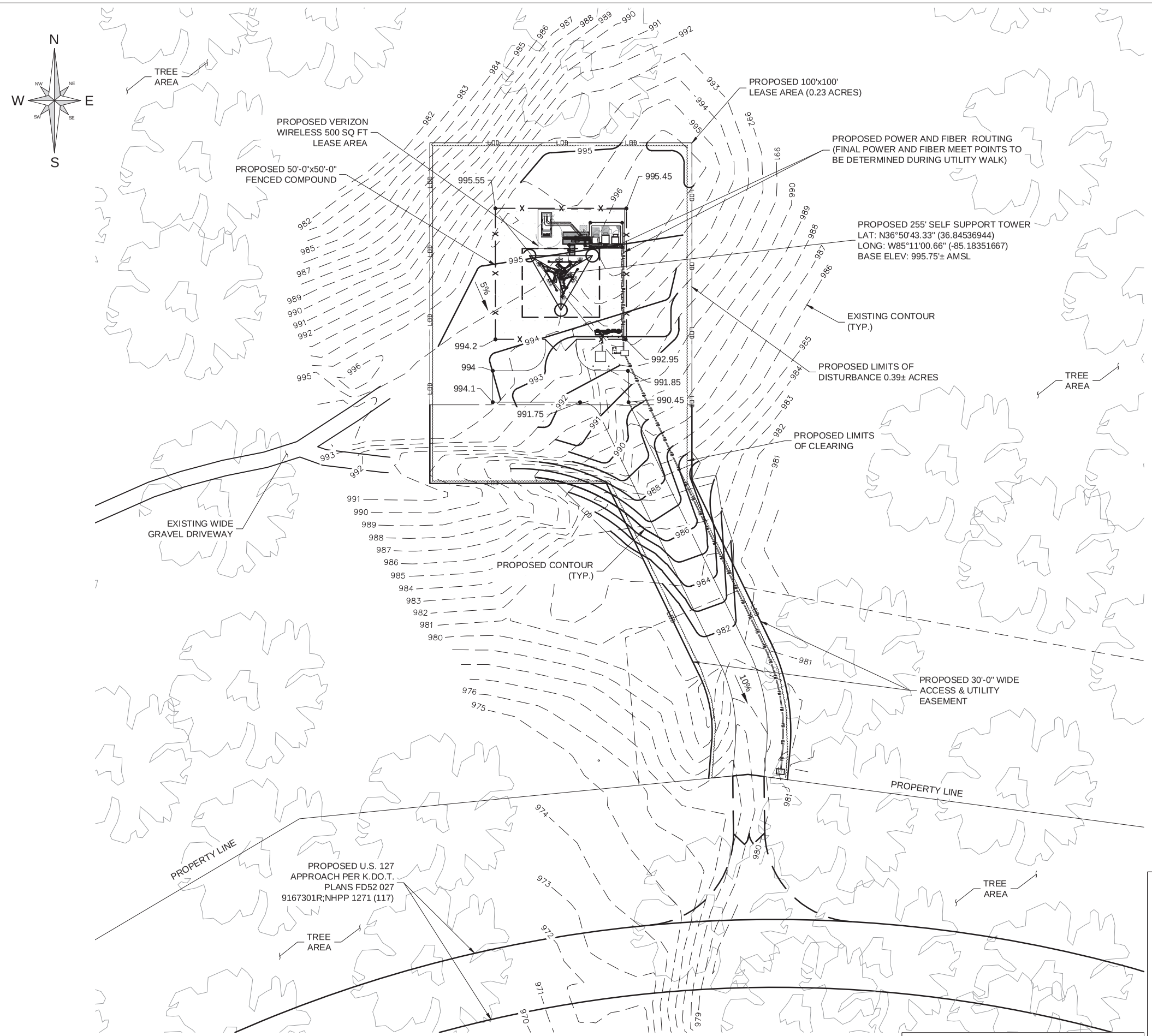

1 GRADING & EROSION CONTROL OVERALL PLAN

SCALE 1"=40 FOR 11"x17"
1"=20 FOR 22"x34"

EROSION AND SEDIMENT CONTROL LEGEND

—SF—SF— (SF)	PROPOSED SILT FENCE
—LOD—	LIMITS OF DISTURBANCE
~~	LIMITS OF CLEARING

NOTES:

1. SEE NOTES ON SHEETS C-6 & GN-12.
2. NO CUT OR FILL SLOPE SHALL BE STEEPER THAT 3H:1V.
3. CONTRACTOR TO ADHERE TO ALL KENTUKY DEPARTMENT OF TRANSPORTATION REQUIREMENTS AND SPECIFICATIONS DURING CONSTRUCTION

LEGEND

993'	EXISTING CONTOUR
991'	PROPOSED CONTOUR
	EXISTING EASEMENT
	PROPOSED EASEMENT
	PROPOSED LEASE AREA
X	PROPOSED FENCE
	EXISTING EDGE OF PAVEMENT
FO FO	UNDERGROUND FIBER CONDUIT
E E	UNDERGROUND ELECTRICAL CONDUIT
10%	PROPOSED DRIVEWAY SLOPE
5%	PROPOSED SITE SLOPE
	PROPOSED DITCH
995.75	PROPOSED SPOT ELEV

CARRIER:

verizon

250E 96TH ST, STE 175
INDIANAPOLIS, IN 46240-3753

CLIENT:

LAB

49030 PONTIAC TRAIL, SUITE 400
WIXOM, MICHIGAN 48393
PHONE: (248) 705-9212

CONTRACTOR:

ALBUL ENGINEERING

3840 E. ROBINSON ROAD
AMHERST, NY 14228
WWW.ALBULENG.COM

STATE OF KENTUCKY
DMITRIY V. ALBUL
25093
LICENSED
PROFESSIONAL ENGINEER

02-21-25
DMITRIY ALBUL
KY LICENSE NO. 25093

REV	DATE	DESCRIPTION	DRAWN BY	CHECKED BY
9				
8				
7				
6				
5				
4				
3				
2				
1	02/21/25	ISSUED FOR REVIEW	AIK	AAN
0	07/31/23	PRELIMINARY	YAY	AAN

SITE INFORMATION:

CK AGEE RIDGE

724991

13401 N. HWY 127

ALBANY, KY 42602

CLINTON COUNTY

PROJECT NUMBER:

34752.LAB.GDP.V58082.0

SHEET NAME:

GRADING & EROSION CONTROL OVERALL PLAN

SHEET NUMBER: C-2

SCALE: AS SHOWN

SHEET SIZE - 22"x34"

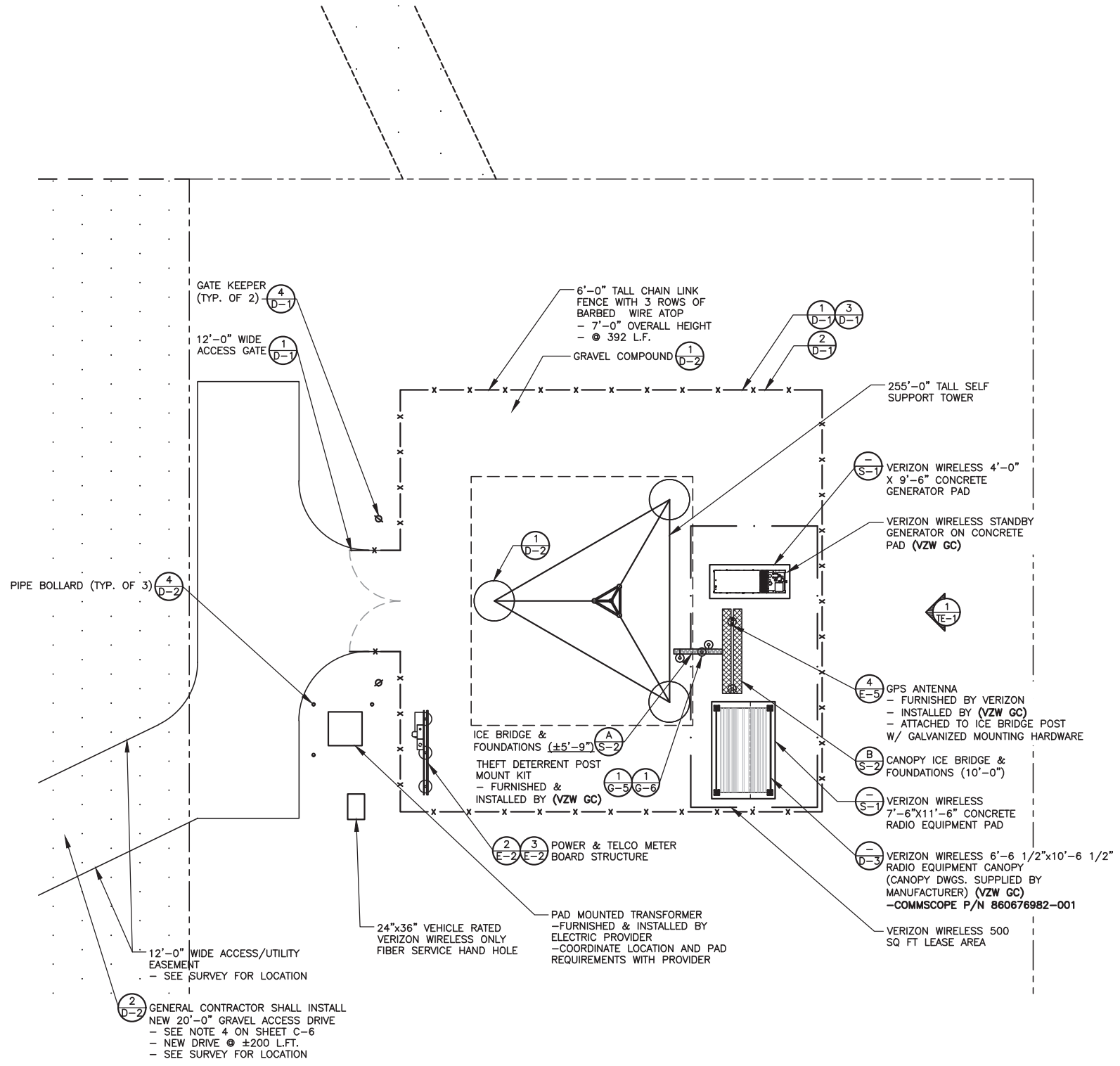

DETAILED SITE PLAN

SCALE: 1/16" = 1'-0"

NORTH

LEGEND

	IRON PIN
+XXX.XX	DRAINAGE LINE / SPOT ELEVATION
	GRAVEL COMPOUND
	CENTER LINE
—X—X—X—X—X—	NEW FENCE LINE
	NEW SILT FENCE LINE
— — OE — — OE — — OE —	POWER POLEw/OVERHEAD ELEC./TELE.
	EDGE OF NEW DRIVE
	UNDERGROUND ELECTRICAL CONDUIT
	UNDERGROUND TELEPHONE CONDUIT
	EXISTING CONTOURS
	NEW CONTOURS
	FENCED COMPOUND
	CONCRETE
	ACCESS DRIVE

Kentucky 811

Know what's below. Call before you dig.

Call Monday thru Friday - 7 am. to 6 pm.

1-800-752-6007

PER KENTUCKY STATE LAW, IT IS AGAINST THE LAW TO EXCAVATE WITHOUT NOTIFYING THE UNDERGROUND LOCATION SERVICE TWO (2) WORKING DAYS BEFORE COMMENCING WORK.

*NOTE:
GENERAL CONTRACTOR IS TO ENSURE THERE IS NO DISTURBANCE OF PROPERTY, SOIL, ETC. OUTSIDE OF THE STAKED LEASE AREA WITHOUT APPROVAL FROM VERIZON WIRELESS CONSTRUCTION MANAGER

TOWERCOM
241 ATLANTIC BLVD, STE 201
NEPTUNE BEACH, FL 32266

LAB
49030 Pontiac Trail, Suite 100
Wixom, Michigan 48393
PHONE: (248) 705-9212

REV.	DATE	DESCRIPTION
A	08/09/23	ISSUED FOR REVIEW
B	08/21/23	REVISED CD
0	08/24/23	FINAL CD
1	01/25/24	REVISED FINAL CD
2	05/29/24	REVISED FINAL CD
3	02/20/25	REVISED FINAL CD

STATE OF KENTUCKY
DMITRIY V. ALBUL
25093
LICENSED PROFESSIONAL ENGINEER
02-21-25

SITE INFORMATION:

CK AGEE RIDGE

13401 N. HWY 127
ALBANY, KY 42602
CLINTON COUNTY

SITE NUMBER: 724991

SITE NAME: CK AGEE RIDGE

PID NUMBER: 16933258

DRAWN BY: RC
CHECKED BY: PL
DATE: 08.09.23

SHEET TITLE: DETAILED SITE PLAN

SHEET NUMBER: C-3

MIK PAD & CANOPY REV 4.3.1 02/03/25

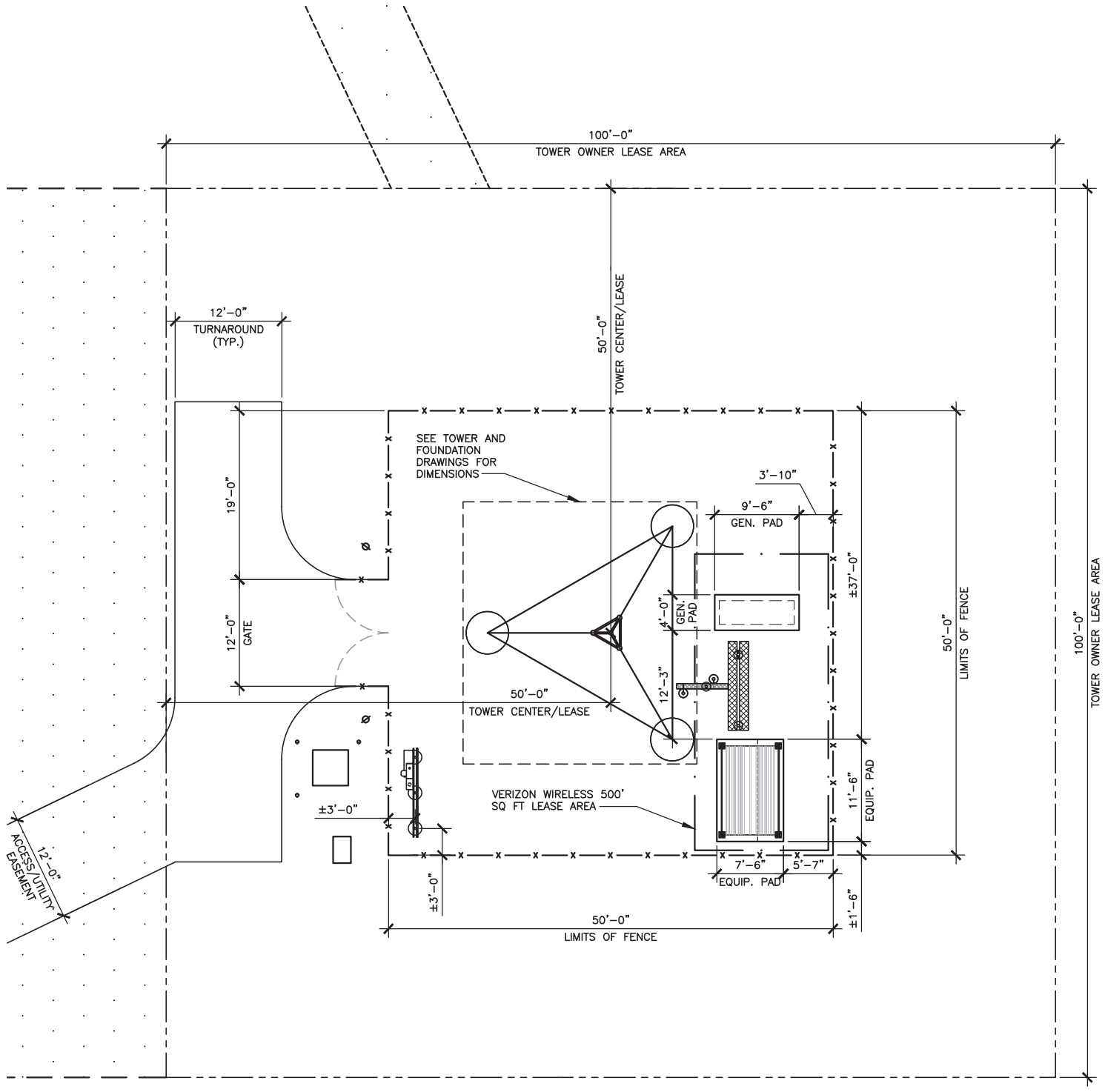

LEGEND

●	IRON PIN
←— +XXX.XX	DRAINAGE LINE SPOT ELEVATION
	GRAVEL COMPOUND
	CENTER LINE
—X—X—X—X—X—	NEW FENCE LINE
—□—□—□—	NEW SILT FENCE LINE
— — DE — — DE — — DE —	POWER POLEw/OVERHEAD ELEC./TELE.
	EDGE OF NEW DRIVE
	UNDERGROUND ELECTRICAL CONDUIT
	UNDERGROUND TELEPHONE CONDUIT
	EXISTING CONTOURS
	NEW CONTOURS
— · — · — · —	NEW LEASE AREA AND EASEMENT
	FENCED COMPOUND
	CONCRETE
	ACCESS DRIVE

Kentucky 811
Know what's below.
Call before you dig.
Call Monday thru Friday - 7 am. to 6 pm.
1-800-752-6007
PER KENTUCKY STATE LAW, IT IS AGAINST THE LAW TO EXCAVATE WITHOUT NOTIFYING THE UNDERGROUND LOCATION SERVICE TWO (2) WORKING DAYS BEFORE COMMENCING WORK.

*NOTE:
GENERAL CONTRACTOR IS TO ENSURE THERE IS NO DISTURBANCE OF PROPERTY, SOIL, ETC. OUTSIDE OF THE STAKED LEASE AREA WITHOUT APPROVAL FROM VERIZON WIRELESS CONSTRUCTION MANAGER

DIMENSIONED SITE PLAN

SCALE: 1/16" = 1'-0"

NORTH

TOWERCOM
241 ATLANTIC BLVD, STE 201
NEPTUNE BEACH, FL 32266

LAB
49030 Pontiac Trail, Suite 100
Wixom, Michigan 48393
PHONE: (248) 705-9212

REV.	DATE	DESCRIPTION
A	08/09/23	ISSUED FOR REVIEW
B	08/21/23	REVISED CD
0	08/24/23	FINAL CD
1	01/25/24	REVISED FINAL CD
2	05/29/24	REVISED FINAL CD
3	02/20/25	REVISED FINAL CD

STATE OF KENTUCKY
DMITRIY V. ALBUL
25093
LICENSED PROFESSIONAL ENGINEER
02-21-25

SITE INFORMATION:
CK AGEE RIDGE
13401 N. HWY 127
ALBANY, KY 42602
CLINTON COUNTY

SITE NUMBER:
724991

SITE NAME:
CK AGEE RIDGE

PID NUMBER: 16933258
DRAWN BY: RC
CHECKED BY: PL
DATE: 08.09.23

SHEET TITLE:
DIMENSIONED SITE PLAN

SHEET NUMBER:
C-4

MIK PAD & CANOPY REV 4.3.1 02/03/25

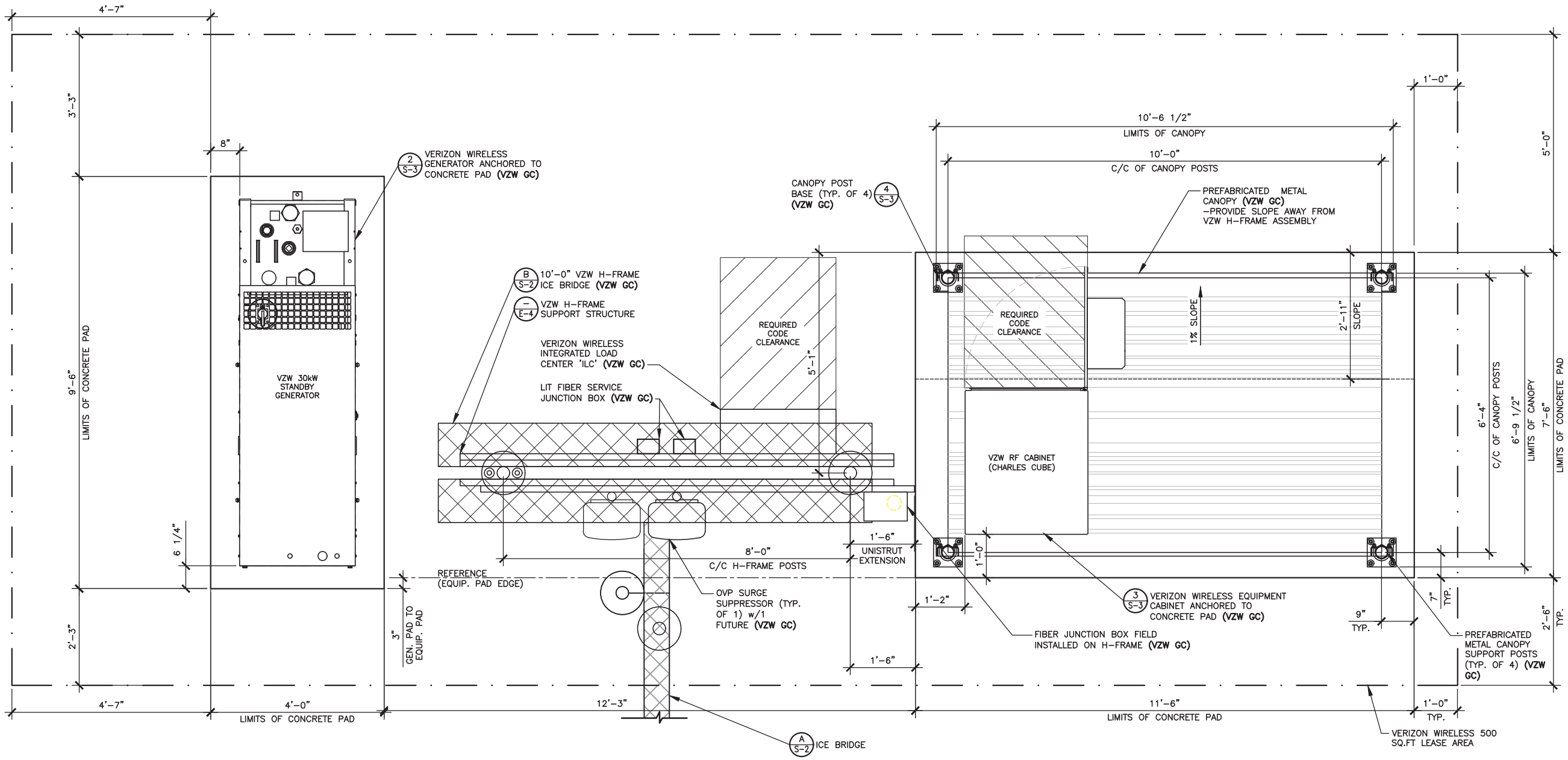

DETAILED VZW EQUIPMENT PLAN

SCALE: 3/8" = 1'-0"

NORTH

Kentucky 811
Know what's below. Call before you dig.
Call Monday thru Friday – 7 am. to 6 pm.
1-800-752-6007
PER KENTUCKY STATE LAW, IT IS AGAINST THE LAW TO EXCAVATE WITHOUT NOTIFYING THE UNDERGROUND LOCATION SERVICE TWO (2) WORKING DAYS BEFORE COMMENCING WORK.

*NOTE:
GENERAL CONTRACTOR IS TO ENSURE THERE IS NO DISTURBANCE OF PROPERTY, SOIL, ETC. OUTSIDE OF THE STAKED LEASE AREA WITHOUT APPROVAL FROM VERIZON WIRELESS CONSTRUCTION MANAGER

TOWERCOM
241 ATLANTIC BLVD, STE 201
NEPTUNE BEACH, FL 32266

LAB
49030 Pontiac Trail, Suite 100
Wixom, Michigan 48393
PHONE: (248) 705-9212

REV.	DATE	DESCRIPTION
A	08/09/23	ISSUED FOR REVIEW
B	08/21/23	REVISED CD
0	08/24/23	FINAL CD
1	01/25/24	REVISED FINAL CD
2	05/29/24	REVISED FINAL CD
3	02/20/25	REVISED FINAL CD

STATE OF KENTUCKY
DMITRIY V. ALBUL
25093
LICENSED PROFESSIONAL ENGINEER
02-21-25

SITE INFORMATION:
CK AGEE RIDGE
13401 N. HWY 127
ALBANY, KY 42602
CLINTON COUNTY

SITE NUMBER:
724991

SITE NAME:
CK AGEE RIDGE

PID NUMBER: 16933258

DRAWN BY: RC
CHECKED BY: PL
DATE: 08.09.23

SHEET TITLE:
DETAILED VZW EQUIPMENT PLAN

SHEET NUMBER:
C-5

MIK PAD & CANOPY REV 4.3.1 02/03/25

GENERAL SITE CONSTRUCTION NOTES

1. SCHEDULE:

THE CONSTRUCTION OF THE SITE REQUIRES A CERTAIN SEQUENCE OF EVENTS TO MINIMIZE CONSTRUCTION TIME REQUIRED UNTIL AVAILABILITY OF CELLULAR TELEPHONE SERVICE. VERIFY SCHEDULE DURING BID WALK.

2. TOWER OWNER REPRESENTATIVE:

TOWERCOM
241 ATLANTIC BLVD, STE 201
NEPTUNE BEACH, FL 32266

PROPERTY OWNER REPRESENTATIVE:

LOWHORN JERRY LYNN & FRANCES
1406 SPECK RD
ALBANY, KY 42602

3. ANTENNA INSTALLATION:

THE **VERIZON WIRELESS CONTRACTOR (VZW GC)** INSTALLING THE FRAME/PLATFORM SHALL ENSURE THAT THE PLATFORM IS ALIGNED BASED ON THE VERIZON WIRELESS RF PLAN. DURING THIS WORK, THE GENERAL CONTRACTOR SHALL BE LIMITED TO THE WORK WHICH CAN BE PERFORMED OUTSIDE THE VICINITY OF THE TOWER.

4. ACCESS DRIVEWAY:

THE GENERAL CONTRACTOR SHALL CONSTRUCT THE ACCESS DRIVE PER THE ALIGNMENT AS SHOWN ON THESE DRAWINGS. IF ANY AREA OF CONSTRUCTION REQUIRES ADDITIONAL FILL OF AGGREGATE STONE THAN SHOWN ON THE DRAWINGS, THE GENERAL CONTRACTOR SHALL NOTIFY THE ENGINEER FOR APPROVAL OF THE SIZE, TYPE AND QUANTITY OF STONE/FILL NECESSARY AND SHALL NOT BE USED UNTIL APPROVAL BY THE ENGINEER. THE GENERAL CONTRACTOR SHALL ALSO OBTAIN DRIVE PERMIT FOR NEW ACCESS DRIVE.

5. PREFABRICATED EQUIPMENT CABINETS, CANOPY AND GENERATOR:

THIS **VERIZON WIRELESS CONTRACTOR (VZW GC)** SHALL PROVIDE ALL LABOR, EQUIPMENT AND MATERIALS FOR THE PROPER LIFTING, TRANSPORTING AND ASSEMBLY OF THE PREFABRICATED EQUIPMENT CANOPY FROM THE TRANSPORT TRUCK BED TO THE FINAL POSITION. THE EQUIPMENT CABINETS SHALL BE LIFTED INTO PLACE ON THE CONCRETE EQUIPMENT PAD. THE GENERATOR SHALL BE LIFTED INTO PLACE BY USING TWO SPREADER BAR ASSEMBLIES. EACH SPREADER BAR SHALL BE A MINIMUM 3' WIDE (RATED TO CARRY 3 TONS). THE GENERATOR WEIGHT IS 1,425# WITH TANK PEDESTAL. **VERIZON WIRELESS CONTRACTOR (VZW GC)** SHALL ANCHOR THE EQUIPMENT CABINETS AND GENERATOR BASE TO THE CONCRETE SLAB USING ANCHOR BOLTS. EXTREME CAUTION SHALL BE TAKEN IN THE INSTALLATION OF ALL EQUIPMENT TO AVOID CONTACT WITH EXISTING OVERHEAD UTILITY LINES.

THE **VERIZON WIRELESS CONTRACTOR (VZW GC)** IS RESPONSIBLE FOR ATTACHING, SECURING OR ASSEMBLING ANY ACCESSORY OR LOOSE ITEMS THAT ARE SHIPPED WITH THE PREFABRICATED EQUIPMENT CABINETS, CANOPY AND GENERATOR AND SHALL INCLUDE THIS WORK IN THE VZW EQUIPMENT INSTALLATION PORTION OF THE BID.

6. UTILITIES:

THE CONTRACTOR SHALL BE RESPONSIBLE FOR THE EXCAVATION AND PROPER BACKFILLING OF TRENCHES AND SUPPLY CONDUIT REQUIRED FOR UNDERGROUND TELEPHONE & ELECTRICAL UTILITIES. ALL TRENCHING SHALL BE COMPACTED TO 95% MAXIMUM DRY DENSITY IN ACCORDANCE W/ASTM D–1557.

THE CONTRACTOR SHALL RUN AN ELECTRICAL TRENCH WITH 2 1/2" CONDUIT AND DETECTABLE PULL TAPE FROM THE NEW RADIO EQUIPMENT PAD AND END AT THE NEW METER BOARD STRUCTURE. THE CONTRACTOR SHALL THEN RUN (2) TWO 4" CONDUIT WITH PULL TAPE FROM THE METER BOARD TO THE NEW PAD MOUNTED TRANSFORMER LOCATION AND STUB UP 6" ABOVE GRADE. THE ELECTRICAL PROVIDER WILL THEN RUN UNDERGROUND CONDUIT FROM THE NEW TRANSFORMER TO THE NEW UTILITY POLE, CONTACT ------- @ ###-###-####, WITH ???????? BEFORE BEGINNING CONSTRUCTION TO VERIFY LOCATION OF CONDUIT AND TRANSFORMER. CONDUITS MUST HAVE A MINIMUM DEPTH OF 36". CONTRACTOR SHALL CONTACT ELECTRIC PROVIDER TO HAVE TRENCH AND CONDUIT INSPECTED BEFORE THE TRENCH IS COVERED, THE ELECTRIC PROVIDER SHALL SUPPLY SERVICE TO THE NEW METER BOARD STRUCTURE. THE CONTRACTOR SHALL CONTACT ----- ENERGY TO SETUP AN INSPECTION OF THE TRENCHES BEFORE THEY ARE BACKFILLED. THE CONTRACTOR SHALL PROPERLY BACKFILL THE TRENCHES AFTER INSPECTION AND SETTLEMENT. CONTACT ELECTRIC PROVIDER THREE TO FOUR WEEKS PRIOR TO CONSTRUCTION FOR NEW SERVICE AND COORDINATION OF ACCESS TO SITE. THE CONTRACTOR SHALL CONTACT ---------- FOR A COPY OF THEIR SPECIFICATIONS BEFORE CONSTRUCTION

THE TOWER OWNER SHALL ENSURE PERMANENT ELECTRIC POWER IS AVAILABLE FOR **VERIZON WIRELESS** AT THE METER BASE PRIOR TO THE SITE BEING RELEASED TO **VERIZON WIRELESS** AS TENANT READY.

THE **VERIZON WIRELESS GENERAL CONTRACTOR (VZW GC)** SHALL RUN ELECTRICAL CONDUCTORS FROM NEW METER CENTER TO NEW VZW INTEGRATED LOAD CENTER WITHIN TOWER OWNER INSTALLED 2 1/2" CONDUIT CONTACT ELECTRIC PROVIDER TO HAVE NEW METER INSTALLED.

THE **VERIZON WIRELESS GENERAL CONTRACTOR (VZW GC)** SHALL BE RESPONSIBLE FOR THE ORDERING AND COORDINATING THE DELIVERY OF A FIBER OPTIC SERVICE LINE TO THE RADIO EQUIPMENT ENCLOSURE. COORDINATE WITH THE FIBER PROVIDER AND THE VERIZON WIRELESS FACILITY ENGINEER.

1. (3) 1–1/4" SMOOTHWALL SDR–11 HDPE CONDUITS AND PULLTAPES SHALL BE INSTALLED FROM HANDHOLE OUTSIDE COMPOUND TO MEET POINT AT THE PUBLIC RIGHT–OF–WAY WITHIN UTILITY EASEMENT WITH PULL TAPE THE HANDHOLE MODEL AS FOLLOWS:
   - THE VERIZON FIBER CONDUIT HANDHOLES SHALL BE OLDCASTLE INFRASTRUCTURE MODEL 24361480 PC2436–30 T22 – VERIZON LOGO OR QUAZITE|HUBBELL POWER SYSTEMS MODEL PG2436Z1857B4 ASSY T22 SW OB 24x36x30 VERIZON V, OR APPROVED EQUALS. ALTERNATIVE HANDHOLES MAY BE USED IF MEETING THE DESIGNATED LOADING AND HAVING DIMENSIONS OF AT LEAST 2'x3'x2.5'. ALL VERIZON HANDHOLES TO HAVE "VERIZON" LOGO ON COVER.
   - THE GENERAL USE FIBER CONDUIT HANDHOLE SHALL BE A MODEL AS APPROVED BY THE CONSTRUCTION MANAGER.
2. CONTRACTOR SHALL PLACE ADDITIONAL HANDHOLES ALONG ROUTE, AS NECESSARY, SO THAT SPACING BETWEEN HANDHOLES IS NO GREATER THAN 500 FEET.
3. CONTRACTOR SHALL PLACE (1) COPPERHEAD INDUSTRIES ORANGE TRACER WIRE (PART NO. 1230N–HS) OR APPROVED EQUIVALENT ABOVE PROPOSED FIBER CONDUIT(S)
4. (2) 1–1/4" SMOOTHWALL SDR–11 HDPE CONDUITS w/PULLTAPES SHALL BE INSTALLED FROM VERIZON WIRELESS ONLY HANDHOLE OUTSIDE COMPOUND TO VERIZON WIRELESS EQUIPMENT PAD LOCATION (PER PLANS)

ELECTRIC SERVICE PROVIDED BY:
SOUTH KENTUCKY RECC

FIBER OPTIC SERVICE PROVIDED BY:
FIBER PROVIDER TO BE DETERMINED BY VERIZON WIRELESS

7. SITE GRADING

A. UNIFORMLY GRADE AREA TO BE SMOOTH SURFACE FREE FROM IRREGULAR SURFACE CHANGES. COMPLY WITH COMPACTION REQUIREMENTS AND GRADE TO CROSS SECTION, TOPO LINES AND ELEVATIONS INDICATED.

1. COMPOUND SURFACE GRADES ARE TO BE SLOPED TO DIRECT WATER AWAY FROM EQUIPMENT PAD AND TOWER TO PREVENT STANDING AND PONDING WATER.

2. COMPOUND SURFACE SHALL BE COMPACTED TO A 95% MAXIMUM DRY DENSITY TO ALLOW PROPER STERILIZATION FOR ACCESS TO ALL CUSTOMERS DENSITY TESTING MAY BE REQUIRED AT VERIZON WIRELESS' DISCRETION DUE TO QUESTIONABLE COMPACTION OF FINISH SURFACE GRADE OR SUB–GRADE.

3. DITCHES/SWALES AROUND THE COMPOUND AREA AND ALONG ACCESS ROAD SHALL BE CONSTRUCTED SO TO PROVIDE A SMOOTH TRANSITION BETWEEN EXISTING GRADES/SLOPE AND NEW PROPOSED GRADES.

4. SITE GRADING AND DRAINAGE SHOULD BE CONSTRUCTED TO PREVENT WATER FROM ENTERING THE COMPOUND SURFACE OR THE ACCESS ROAD SUB–GRADE.

B. MOISTURE CONTROL – UNIFORMLY MOISTEN OR AERATE SUB–GRADE AND EACH SUBSEQUENT FILL OR BACK FILL LAYER BEFORE COMPACTION TO WITHIN 90% OF OPTIMUM MOISTURE CONTENT. DO NOT PLACE BACK FILL OR FILL MATERIAL ON SURFACES THAT ARE MUDDY, FROZEN OR CONTAIN FROST, SNOW OR ICE.

C. STOCKPILING MATERIAL (TOP SOIL OR FILL DIRT) – SHOULD BE PLACED IN AN AREA THAT CAN BE CONTROLLED TO PREVENT WATER, SNOW, OR ICE FROM EFFECTING MOISTURE CONTENT. STOCKPILES MAY HAVE TO BE COVERED TO PREVENT ADDITIONAL MOISTURE FROM ACCUMULATING SO ACCEPTABLE FILL CAN BE USED.

D. DE–WATERING – PREVENT SURFACE WATER AND SUBSURFACE OR GROUND WATER FROM ENTERING EXCAVATIONS, FROM PONDING ON PREPARED SUB–GRADE, AND FROM FLOODING PROJECT OR BUILD AREA.

E. EROSION CONTROL – MEASURES SHALL BE MAINTAINED THROUGHOUT THE DURATION OF THE PROJECT.
1. ALL INLETS, DRAINS, PIPES, SWELLS, AND ROADS SHALL BE KEPT CLEAN AND FREE OF DIRT AND SILT.

F. GEOTEXTILE FABRIC – AFTER PLACEMENT AND COMPACTION OF FILL WITHIN THE WORK AREA AND BEFORE THE PLACEMENT OF LIMESTONE AGGREGATE, (SEE SITE AREA SURFACING DETAIL ON D–1), THE ENTIRE DISTURBED WORK AREA SHALL BE COVERED WITH A GEOTEXTILE FABRIC. THIS FABRIC SHALL BE "TENCATE (MIRAFI 500X) WOVEN ENGINEERING FABRIC" INSTALLED ACCORDING TO THE MANUFACTURERS RECOMMENDATIONS.

8. TRASH REMOVAL & SANITATION:

THE GENERAL CONTRACTOR AND **VERIZON WIRELESS GENERAL CONTRACTOR (VZW GC)** SHALL REMOVE ALL TRASH AS CREATED BY THEMSELVES AND THEIR SUBCONTRACTORS. TRASH SHALL BE REMOVED FROM THE SITE IN A TIMELY FASHION TO A LEGAL DISPOSAL AREA. THE GENERAL CONTRACTOR SHALL ALSO REMOVE ALL TRASH CREATED BY OTHER CONTRACTORS INCLUDING CABLE REELS, CARDBOARD BOXES AND PACKING. NO BURNING OR BURYING OF TRASH IS PERMITTED.

THE GENERAL CONTRACTOR SHALL PROVIDE AND MAINTAIN A PORTABLE TOILET FOR THE DURATION OF THE CONSTRUCTION PROJECT.

A. THE GENERAL CONTRACTOR SHALL VERIFY THE EQUIPMENT PAD FOUNDATION IS LOCATED CORRECTLY WITH RESPECT TO THE TOWER FOUNDATION. THE CONTRACTOR MUST NOTIFY THE ARCHITECT/ENGINEER OF ANY DISCREPANCIES PRIOR TO POURING CONCRETE.

B. TOWER & FOUNDATION DESIGN ARE BY OTHERS FOR TOWER OWNER. PRIOR TO CONSTRUCTION THE CONTRACTOR SHALL VERIFY IN WRITING FROM TOWER OWNER THAT THE TOWER IS STRUCTURALLY SUFFICIENT TO SUPPORT ALL LOADINGS AS OUTLINED IN THESE DOCUMENTS. TOWER AND FOUNDATION DESIGN SHALL BE PERFORMED BY A LICENSED ENGINEER.

C. THE GENERAL CONTRACTOR SHALL VERIFY THE TOP OF FOUNDATION MATCHES THE FAA APPROVAL LETTER.

10. EXCAVATION OF UTILITIES:

A. FIELD VERIFY THE LOCATION OF ANY EXISTING UNDERGROUND UTILITIES PRIOR TO EXCAVATING IN THE VICINITY OF THE SITE. ALL EXCAVATIONS SHALL BE MADE BY HAND OVER OR UNDER OR IMMEDIATELY ADJACENT TO ANY EXISTING UTILITIES & GROUNDING.

B. ALL UTILITY COMPANIES SHALL BE NOTIFIED AT LEAST 48 HOURS PRIOR TO ANY CONSTRUCTION ON THIS PROJECT. CONTACT UNDERGROUND UTILITY PROTECTION SERVICE BEFORE YOU DIG AT 1–800–382–5544 OR 811.

C. EXISTING UTILITIES ARE SHOWN FROM THE SURVEY AND ARE NOT NECESSARILY COMPLETE AND ACCURATE. THE CONTRACTOR SHALL BE RESPONSIBLE TO LOCATE, EXPOSE AND DETERMINE IF CONFLICTS EXIST WITH THE NEW IMPROVEMENTS. THE CONTRACTOR SHALL NOTIFY THE ENGINEER (A&E FIRM) IN ORDER TO RESOLVE ANY CONFLICTS.

11. CONTRACTOR'S LICENSE:

THE GENERAL CONTRACTOR, **VERIZON WIRELESS GENERAL CONTRACTOR (VZW GC)** AND ALL OF THEIR SUBCONTRACTORS THAT DO ANY WORK ON THIS PROJECT SHALL BE CURRENTLY LICENSED TO PERFORM WORK IN THE LOCATION OF THIS SITE. PROOF OF LICENSES SHALL BE SUPPLIED TO VERIZON WIRELESS PRIOR TO THE COMMENCEMENT OF ANY WORK.

12. SEEDING:

ALL DISTURBED AREAS SHALL BE REPAIRED AND SEEDED BY THE GENERAL CONTRACTOR, UNLESS OTHERWISE NOTED. SEED DISTURBED AREAS W/4 POUNDS/1000 SQ. FT. – 60% KENTUCKY BLUEGRASS, 18% CREEPING RED FESCUE, 22% ANNUAL RYEGRASS.

13. TRAFFIC CONTROL:

THE CONTRACTOR SHALL FURNISH, INSTALL AND MAINTAIN ALL REQUIRED TRAFFIC CONTROL DEVICES IN ACCORDANCE WITH THE MANUAL OF UNIFORM TRAFFIC CONTROL DEVICES OR GOVERNING LOCAL AGENCIES.

14. CONSTRUCTION STAKING:

THE CONTRACTOR SHALL BE RESPONSIBLE FOR ALL CONSTRUCTION STAKING NEEDED TO COMPLETE ALL THE CONSTRUCTION SHOWN HEREON. CONTACT DESIGN ENGINEER TO SCHEDULE CONSTRUCTION STAKING.

15. THE CONTRACTOR SHALL BE RESPONSIBLE FOR ANY DAMAGE TO EXISTING PROPERTY RESULTING FROM THE CONSTRUCTION ACTIVITIES, INCLUDING BUT NOT LIMITED TO PAVEMENT, FINISHED GRADES, LANDSCAPING, BUILDINGS, SURVEY MARKERS, FIELD TILES, CULVERTS, ETC.

16. IN THE EVENT ANY DISCREPANCIES OR ERRORS ARE FOUND ON THESE PLANS OR ANY CONFLICT OR PROBLEMS ARE ENCOUNTERED DURING CONSTRUCTION, THE GENERAL CONTRACTOR OR **VERIZON WIRELESS GENERAL CONTRACTOR (VZW GC)** SHALL NOTIFY THE ENGINEER BEFORE PROCEEDING WITH THE WORK. NO ADDITIONAL COMPENSATION WILL BE PAID TO THE GENERAL CONTRACTOR OR **VERIZON WIRELESS GENERAL CONTRACTOR (VZW GC)** FOR WORK HAVING TO BE REDONE FOR GRADE OR GEOMETRIC DISCREPANCIES IF NOTICE TO THE ENGINEER HAS NOT BEEN PROVIDED. THE ENGINEER RESERVES THE RIGHT TO MAKE MINOR ADJUSTMENTS AS NECESSARY TO ACCOMPLISH THE INTENT OF THESE PLANS.

17. ALL SITE WORK AND CONSTRUCTION SHALL CONFORM TO ANY AND ALL APPLICABLE CODES AND VERIZON WIRELESS STANDARDS AND SPECIFICATIONS.

18. ALL ELEVATIONS AND TOPOGRAPHIC INFORMATION WAS TAKEN FROM A SURVEY SUPPLIED TO A&E FIRM BY SURVEYING FIRM. A&E FIRM HAS NOT VERIFIED THIS INFORMATION AND DOES NOT WARRANT ANY INFORMATION SUPPLIED BY OTHERS.

19. THE GENERAL CONTRACTOR SHALL MAINTAIN A COMPLETE AS–BUILT SET OF PLANS AND CONDITIONS, AND SUBMIT SAME TO THE ENGINEER WITHIN 7 DAYS OF COMPLETION OF CONSTRUCTION. AS–BUILT PLANS SUBMITTED TO THE ENGINEER SHALL INCLUDE A DRAWING WITH DIMENSIONS SHOWING THE LOCATION OF THE UNDERGROUND UTILITIES, GROUNDING GRID, EQUIPMENT PAD, TOWER FOUNDATION, TOWER PLATFORM ORIENTATION, AND FENCE WITHIN THE LEASE AREA OR PROPERTY AND BE CERTIFIED BY A LICENSED PROFESSIONAL SURVEYOR.

20. THE GENERAL CONTRACTOR AND **VERIZON WIRELESS GENERAL CONTRACTOR (VZW GC)** SHALL BE RESPONSIBLE FOR NOTIFICATION OF ALL GOVERNING AGENCIES THAT REQUIRE SITE INSPECTION OF THE WORK AND/OR SIMPLY NOTIFICATION.

21. THE GENERAL CONTRACTOR AND **VERIZON WIRELESS GENERAL CONTRACTOR (VZW GC)** SHALL BE RESPONSIBLE FOR NOTIFICATION AND COORDINATION OF ALL TESTING AGENCIES THAT REQUIRE SITE INSPECTION OR TESTING OF THE WORK AS DIRECTED IN THESE PLANS, GOVERNING AGENCIES AND ALL APPLICABLE CODES.

22. PRIOR TO THE SUBMISSION OF BIDS, THE GENERAL CONTRACTOR AND HIS SUBCONTRACTORS SHALL VERIFY ALL DETAILS AND SCHEDULES ON THE DRAWINGS AND SPECIFICATIONS PROVIDED BY THE OWNER, FOR MEANING OF ABBREVIATIONS AND ADDITIONAL REQUIREMENTS AND INFORMATION. CHECK ALL CONSTRUCTION DOCUMENTS TO INCLUDE, BUT NOT LIMITED TO, GEOTECHNICAL REPORT, STRUCTURAL ANALYSIS, TOWER, MECHANICAL AND ELECTRICAL DRAWINGS, FOR SCALE, SPACE LIMITATIONS, DOOR SWINGS, ADJACENT CARRIER EQUIPMENT COORDINATION AND ADDITIONAL INFORMATION, ETC. REPORT ANY DISCREPANCIES, CONFLICTS, ETC. TO THE OWNER BEFORE SUBMITTING BIDS.

24. WORK SITE SAFETY:

A. CONSTRUCTION WORK PRESENTS UNIQUE THREATS TO HEALTH AND SAFETY. THE CONTRACTOR AND **VERIZON WIRELESS CONTRACTOR (VZW GC)** ARE RESPONSIBLE TO EDUCATE THEIR WORK FORCE OF THESE DANGERS AND LIMIT THEIR EXPOSURE TO HAZARDS. THIS EDUCATION SHALL INCLUDE BUT NOT BE LIMITED TO APPLICABLE TRAINING COURSES AND CERTIFICATIONS, PROPER PERSONAL PROTECTIVE EQUIPMENT USAGE, DAILY TAILGATE MEETINGS AND ANY OTHER PREVENTATIVE MEASURES WHICH MAY BE REASONABLY EXPECTED. THE CONTRACTOR, **VERIZON WIRELESS CONTRACTOR (VZW GC)** AND ALL SUB–CONTRACTORS SHALL BE RESPONSIBLE FOR THE SAFETY OF THE WORK AREA, ADJACENT AREAS AND ANY PROPERTY OCCUPANTS WHO MAY BE AFFECTED BY THE WORK UNDER CONTRACT. ALL CONTRACTORS SHALL REVIEW ALL LANDOWNER, PRIME CONTRACTOR, CARRIER, OSHA, AND LOCAL SAFETY GUIDELINES AND AT ALL TIMES SHALL CONFORM TO THE MOST RESTRICTIVE OF THESE STANDARDS TO ENSURE A SAFE WORKPLACE.

B. TOWER WORK PRESENTS ADDITIONAL THREATS TO HEALTH AND SAFETY. ALL TOWER WORKERS WORKING ON A TOWER MUST BE ADEQUATELY TRAINED AND MONITORED TO ENSURE THAT SAFE WORK PRACTICES ARE LEARNED AND FOLLOWED. AS REQUIRED BY OSHA, WHEN WORKING ON EXISTING COMMUNICATION TOWERS, EMPLOYEES MUST BE PROVIDED WITH APPROPRIATE FALL PROTECTION, TRAINED TO USE THIS FALL PROTECTION PROPERLY, AND THE USE OF FALL PROTECTION MUST BE CONSISTENTLY SUPERVISED AND ENFORCED BY THE CONTRACTOR.

C. ALL SAFETY EQUIPMENT SHALL BE INSPECTED ACCORDING TO ALL OSHA AND INDUSTRY SCHEDULED INTERVALS AND ALL INSPECTIONS SHALL BE DOCUMENTED PER APPLICABLE CODES AND STANDARDS.

D. ALL ANCHORS, CONNECTORS, CLAMPS, TIE WRAPS, ETC. WHEN FIELD CUT SHALL BE DONE SO WITH APPROVED CUTTING TOOLS TO REMOVE ALL SHARP EDGES AND BURRS.

TOWERCOM
241 ATLANTIC BLVD, STE 201
NEPTUNE BEACH, FL 32266

LAB
49030 Pontiac Trail, Suite 100
Wixom, Michigan 48393
PHONE: (248) 705-9212

REV.	DATE	DESCRIPTION
A	08/09/23	ISSUED FOR REVIEW
B	08/21/23	REVISED CD
0	08/24/23	FINAL CD
1	01/25/24	REVISED FINAL CD
2	05/29/24	REVISED FINAL CD
3	02/20/25	REVISED FINAL CD

STATE OF KENTUCKY
DMITRIY V. ALBUL
25093
LICENSED PROFESSIONAL ENGINEER
02-21-25

SITE INFORMATION:
CK AGEE RIDGE
13401 N. HWY 127
ALBANY, KY 42602
CLINTON COUNTY

SITE NUMBER:
724991

SITE NAME:
CK AGEE RIDGE

PID NUMBER: 16933258

DRAWN BY: RC
CHECKED BY: PL
DATE: 08.09.23

SHEET TITLE:
GENERAL SITE CONSTRUCTION NOTES

SHEET NUMBER:
C–6

MK PAD & CANOPY REV 4.3.1 02/03/25

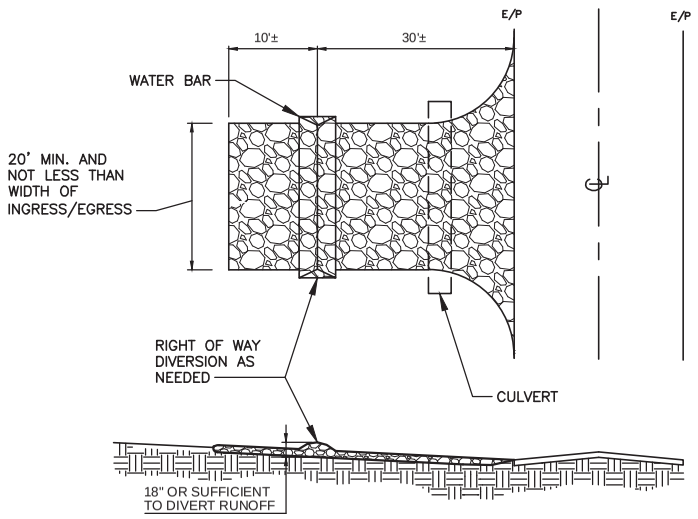

NOTES:

1. STONE SIZE – TWO INCH STONE SHALL BE USED, OR RECYCLED CONCRETE EQUIVALENT.
2. THE CONSTRUCTION ENTRANCE SHALL COINCIDE WITH THE PROPOSED DRIVE AS SHOWN ON THE PLAN.
3. PAVEMENT THICKNESS – STONE LAYER SHALL BE AT LEAST 6" THICK.
4. DRIVEWAY WIDTH – THE ENTRANCE SHALL BE AT LEAST 10' WIDE, BUT NOT LESS THAN FULL WIDTH AT POINTS WHERE INGRESS/EGRESS OCCURS.
5. BEDDING – A GEOTEXTILE SHALL BE PLACED OVER THE ENTIRE AREA PRIOR TO PLACING STONE. IT SHALL HAVE A GRAB TENSILE STRENGTH OF AT LEAST 200 LBS. AND A MULLEN BURST STRENGTH OF AT LEAST 190 LBS.
6. CULVERT – A PIPE OR CULVERT SHALL BE CONSTRUCTED UNDER THE ENTRANCE IF NEEDED TO PREVENT SURFACE WATER FLOWING ACROSS THE ENTRANCE FROM BEING DIRECTED OUT ONTO PAVED SURFACES.
7. WATER BAR – A WATER BAR SHALL BE CONSTRUCTED AS PART OF THE CONSTRUCTION ENTRANCE IF NEEDED TO PREVENT SURFACE RUNOFF FROM FLOWING THE LENGTH OF THE CONSTRUCTION ENTRANCE AND OUT ONTO PAVED SURFACES.
8. MAINTENANCE – TOP DRESSING OF ADDITIONAL STONE SHALL BE APPLIED AS CONDITIONS DEMAND, MUD SPILLED, DROPPED, WASHED OR TRACKED ONTO PUBLIC ROADS, OR ANY SURFACE WHERE RUNOFF OS NOT CHECKED BY SEDIMENT CONTROLS, SHALL BE REMOVED IMMEDIATELY, REMOVAL SHALL BE ACCOMPLISHED BY SCRAPING OR SWEEPING.
9. CONSTRUCTIONS ENTRANCES SHALL NOT BE RELIED UPON TO REMOVE MUD FROM VEHICLES AND PREVENT OFF SITE TRACKING. VEHICLES THAT ENTER AND LEAVE THE CONSTRUCTION SHALL BE RESTRICTED FROM MUDDY AREAS.

TEMPORARY STABILIZED CONSTRUCTION ENTRANCE

1 / C–7

SCALE: N.T.S.

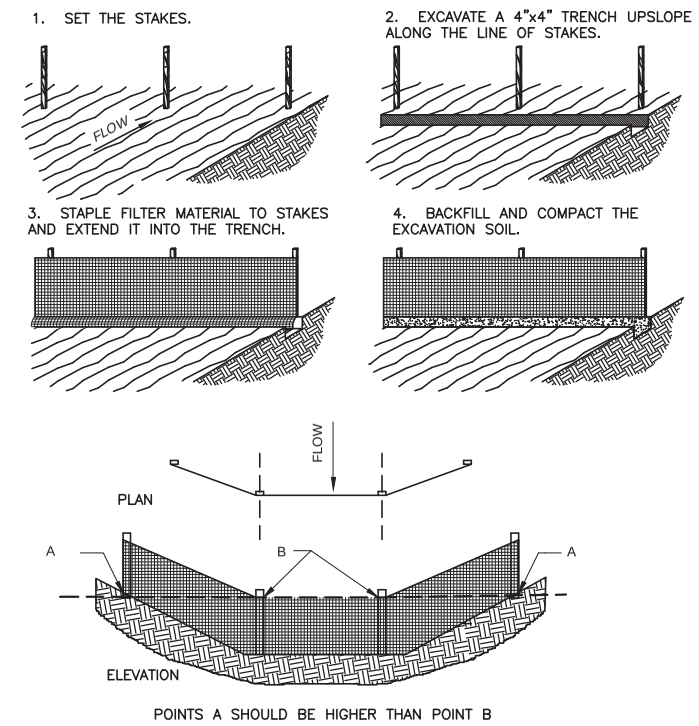

POINTS A SHOULD BE HIGHER THAN POINT B

SILT FENCE DETAIL

2 / C–7

SCALE: N.T.S.

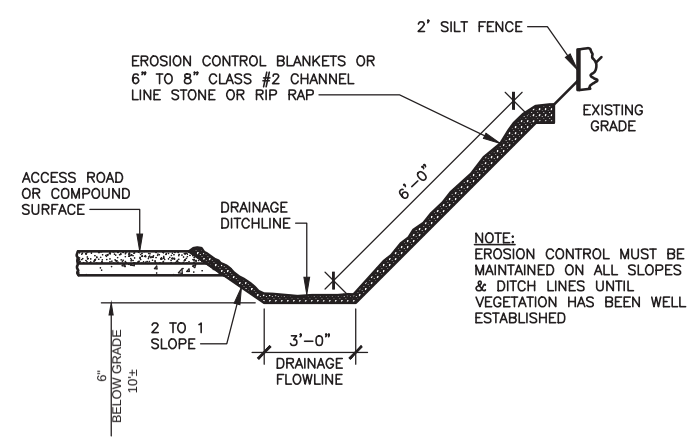

NOTE:
EROSION CONTROL MUST BE MAINTAINED ON ALL SLOPES & DITCH LINES UNTIL VEGETATION HAS BEEN WELL ESTABLISHED

NOTES:

1. WHEN FACED WITH SLOPES LESS THAN 2 TO 1 SLOPES, ALL SLOPES SHOULD BE DOZER TRACKED PRIOR TO SEEDING. ALL SLOPES SHOULD HAVE EROSION CONTROL BLANKETS OR RIP RAP EMBEDDED ON SLOPES SURFACES TO REDUCE EROSION.
2. ALL FLOWLINES MUST BE INSTALLED BELOW SUB–GRADE OF COMPOUND. (AT MINIMUM OF 6" BELOW)

DRAINAGE DITCHLINE DETAIL (SWALE)

3 / C–7

SCALE: N.T.S.

EROSION & SEDIMENT CONTROL NOTES

1. ALL WORK SPECIFIED AS A/AN DOT ITEM SHALL BE GOVERNED BY THE STATE OF INDIANA OF DEPARTMENT OF TRANSPORTATION CONSTRUCTION AND MATERIAL SPECIFICATION HANDBOOK. IT IS CONTRACTORS RESPONSIBILITY TO POSSESS AND BE FAMILIAR WITH APPLICABLE SECTIONS.
2. THIS CONTRACT DRAWING SHALL BE MADE AVAILABLE ON SITE AT ALL TIMES AND PRESENTED UPON REQUEST. IF UNFORESEEN STORM WATER POLLUTION PREVENTION IS ENCOUNTERED, ADDITIONAL STORM WATER POLLUTION PREVENTION (SWPP) MEASURES MAY BE REQUESTED BY THE OWNER, COUNTY ENGINEER, PROJECT ENGINEER OR SOIL CONSERVATION SERVICE REPRESENTATIVE AT ANYTIME. SUCH REQUESTS SHALL BE IMPLEMENTED IMMEDIATELY AT CONTRACTOR'S EXPENSE.
3. ALL STORM WATER POLLUTION PREVENTION ITEMS SHALL BE INSTALLED AS SHOWN OR NOTED ON THIS SHEET.
4. PLANT TEMPORARY SEEDING AND MULCHING IN ALL AREAS THAT SHALL BE INACTIVE FOR 7 DAYS OR MORE. ALL DISTURBED AND ERODED EARTH SHALL BE REGRADED AND SEEDED WITHIN 14 DAYS WITH SEEDING, AS DEFINED ABOVE AND AS SHOWN ON THE TABLE BELOW. TO ESTABLISH STABILITY AND PROVIDE SEDIMENT CONTROL, WHERE POSSIBLE. TEMPORARY SEEDING GROWTH SHALL NOT BE MOWED UNTIL IT HAS GONE TO SEED FOR 1 YEAR.

	JAN.	FEB.	MAR.	APR.	MAY	JUN.	JUL.	AUG.	SEP.	OCT.	NOV.	DEC.
PERMANENT SEEDINGS			A			*	*		*–			
DORMANT SEEDINGS	B									B		
TEMPORARY SEEDINGS			C			D						
SODDING			E**									
MULCHING	F											

A. KENTUCKY BLUEGRASS 90 LBS./AC/MIXED PERENNIAL RYEGRASS 30 LBS./ACRE

B. KENTUCKY BLUEGRASS 135 LBS./AC/MIXED PERENNIAL RYEGRASS 45 LBS./AC. 2 TON STRAW MULCH PER ACRE

C. SPRING OATS 100 LBS./ACRE

D. WHEAT OR CEREAL RYE 150 LBS./ACRE

E. SOD (NURSERY CROWN KENTUCKY BLUEGRASS) 150 LBS./ACRE

F. STRAW MULCH 2 TONS PER ACRE

* IRRIGATION NEEDED DURING JUNE, JULY & SEPTEMBER

** IRRIGATION NEEDED FOR 2–3 WEEKS AFTER SODDING

5. PERMANENT VEGETATION SHALL BE INSTALLED WITHIN 10 DAYS AT THE COMPLETION OF ANY GRADED AREAS, WEATHER PERMITTING. ALL PERMANENT VEGETATION SHALL CONSIST OF PLANTING AND SOD
6. AT SUCH TIME ROUGH GRADING OF THE SITE IS COMPLETE AND DRAINAGE DIVERTS TO INLETS, INLET SEDIMENT FILTERS SHALL BE INSTALLED AT ALL INLET STRUCTURES TO KEEP PIPING SYSTEMS FREE OF SILTATION.
7. SILT BARRIERS SHALL BE INSTALLED AROUND ALL EXISTING OR NEW STORM INLETS, CATCH BASINS, AND YARD DRAINS. INSTALL ROCK CHECK DAMS FOR HEADWALL INLETS FOR STORM WATER POLLUTION PREVENTION.
8. STORM WATER POLLUTION PREVENTION MEASURES SHALL BE INSTALLED OR TOPSOIL STOCKPILES AND OTHER TEMPORARILY DISTURBED AREAS AS SHOWN ON THESE PLANS AND AS DIRECTED BY THE ENGINEER.
9. CONTRACTOR SHALL INSPECT ALL SWPP MEASURES DAILY AND REPAIR AS NECESSARY TO PREVENT EROSION. SILTATION SHALL BE REMOVED FROM AREAS WHERE FAILURES HAVE OCCURRED AND CORRECTIVE ACTION TAKEN WITHIN 24 HOURS TO MAINTAIN ALL SWPP.
10. SILT BARRIERS, CONSTRUCTION ENTRANCES, AND SILT FENCES SHALL REMAIN IN PLACE UNTIL A GOOD STAND OF GRASS HAS BEEN OBTAINED AND/OR PAVING OPERATIONS ARE COMPLETE. CONTRACTOR SHALL KEEP SILT FROM ENTERING ANY STORM DRAINAGE SYSTEM. ONCE SITE HAS BEEN COMPLETELY STABILIZED, ANY SILT IN PIPES AND DRAINAGE SWALES SHALL BE REMOVED WITHIN 10 DAYS.
11. TEMPORARY SEDIMENTATION AND STORM WATER POLLUTION PREVENTION MEASURES MUST BE INSPECTED AND LOGGED BY THE CONTRACTOR FOR INSPECTION, LOGGING SHALL BE WEEKLY AND AFTER RAIN STORMS.
12. UTILITY COMPANIES MUST COMPLY WITH ALL STORM WATER POLLUTION PREVENTION MEASURES AS DEFINED ON THE STORM WATER PREVENTION PLANS, DETAILS AND NOTES.
13. THE TOTAL AREA OF DISTURBANCE FOR THIS PROJECT IS APPROXIMATELY 0.96 ACRES.
14. ALL EXISTING WATER COURSES WITHIN THE PROJECT LIMITS SHALL BE TEMPORARILY PROTECTED DURING LAND CLEARING AND GRADING OPERATIONS. SOILS WITHIN 50 FEET OF SAID WATER COURSES SHALL BE STABILIZED WITHIN 2 DAYS OF THE INITIAL CLEARING / GRADING OPERATION AS SHOWN ON PLANS.
15. ALL DISTURBED AREAS SHALL BE STABILIZED WITHIN 7 DAYS OF FINAL GRADING.
16. IT IS THE CONTRACTOR'S RESPONSIBILITY TO MAINTAIN ALL SEDIMENTATION AND STORM WATER POLLUTION PREVENTION ITEMS AT ALL TIMES.
17. ALL STORM WATER POLLUTION PREVENTION PRACTICES WILL BE INSTALLED BEFORE ANY OTHER EARTH MOVING OCCURS.
18. THE FOLLOWING STORM WATER POLLUTION PREVENTION AND SEDIMENT CONTROL MEASURES WILL BE USED ON THIS SITE:
    1. SILT BARRIERS
    2. SILT FENCE
    3. CONSTRUCTION ENTRANCE
    4. EROSION CONTROL SEED BLANKETS – SPEC FOR TEMPORARY EROSION CONTROL BLANKETS ON SLOPES/DITCHES

CONSTRUCTION SEQUENCE

1. STAKE AND/OR FLAG LIMITS OF CLEARING
2. DURING PRECONSTRUCTION MEETING ALL EROSION & SEDIMENT CONTROL FACILITIES & PROCEDURES SHALL BE DISCUSSED.
3. CLEARING & GRUBBING, AS NECESSARY, FOR INSTALLATION OF PERIMETER CONTROLS.
4. INSTALL SILT FENCE PERIMETER CONTROLS AS SHOWN ON PLANS.
5. INSTALL CONSTRUCTION ENTRANCE, IF CONDITIONS ARE SUCH THAT MUD IS COLLECTION ON VEHICLE TIRES, THE TIRES MUST BE CLEANED BEFORE THE VEHICLES ENTER THE PUBLIC ROADWAY. THE SITE ENTRANCE SHALL BE MAINTAINED IN A CONDITION THAT WILL PREVENT THE TRACKING OR FLOW OF MUD INTO THE PUBLIC RIGHT–OF–WAY. ALL MATERIALS SPILLED, DROPPED, WASHED OR TRACKED FROM VEHICLES ONTO THE ROADWAY MUST BE REMOVED PROMPTLY.
6. CLEARING & GRUBBING THE REMAINING SITE AS NECESSARY.
7. BEGIN FILLING & GRADING AS REQUIRED TO REACH SUBGRADE.
8. CONSTRUCT AND MAINTAIN TEMPORARY DRAINAGE SWALES DURING FILLING AND GRADING ACTIVITIES.
9. CONSTRUCT SITE WORK INCLUDING STORM DRAINAGE FACILITIES.
10. MAINTAIN EROSION & SEDIMENTATION CONTROL MEASURES UNTIL THE SITE HAS BEEN COMPLETELY STABILIZED.
11. REMOVE SEDIMENT CONTROLS.

TOWERCOM

241 ATLANTIC BLVD, STE 201
NEPTUNE BEACH, FL 32266

LAB

49030 Pontiac Trail, Suite 100
Wixom, Michigan 48393
PHONE: (248) 705-9212

REV.	DATE	DESCRIPTION
A	08/09/23	ISSUED FOR REVIEW
B	08/21/23	REVISED CD
0	08/24/23	FINAL CD
1	01/25/24	REVISED FINAL CD
2	05/29/24	REVISED FINAL CD
3	02/20/25	REVISED FINAL CD

STATE OF KENTUCKY
DMITRIY V. ALBUL
25093
LICENSED PROFESSIONAL ENGINEER

02-21-25

SITE INFORMATION:

CK AGEE RIDGE

13401 N. HWY 127
ALBANY, KY 42602
CLINTON COUNTY

SITE NUMBER:
724991

SITE NAME:
CK AGEE RIDGE

PID NUMBER: 16933258

DRAWN BY: RC
CHECKED BY: PL
DATE: 08.09.23

SHEET TITLE:
BEST MANAGEMENT PRACTICES & EROSION CONTROL DETAILS AND NOTES

SHEET NUMBER:
C–7

MIK PAD & CANOPY REV 4.3.1 02/03/25

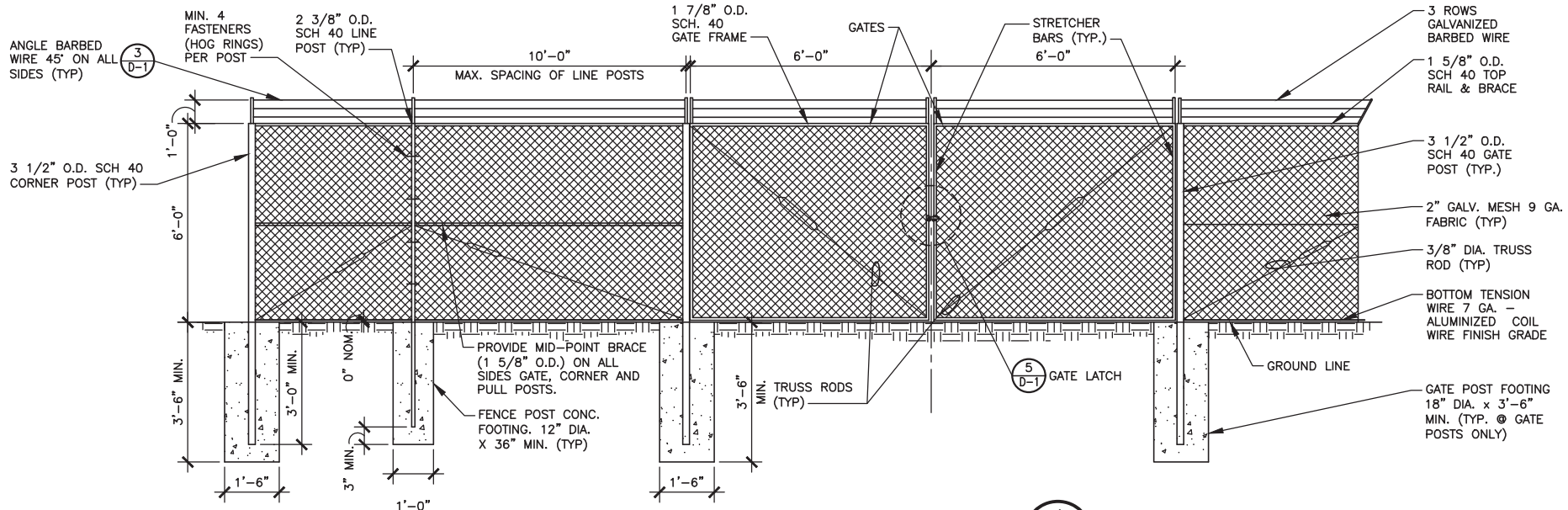

CHAIN LINK FENCE & POST DETAIL 1 D-1

SCALE: N.T.S.

CHAIN LINK FENCING NOTES

1. ALL FENCE AND FABRIC SHALL BE HOT DIPPED GALVANIZED WITH A MINIMUM OF 2 OZ. PER SQUARE FOOT, 9 GAUGE WIRE (MIN. BREAKING STRENGTH OF 1,290 LBS) WITH 2" MESH. ALL BARBED WIRE SHALL BE ALUMINUM OR COATED PER NOTE #4.
2. BOTTOM EDGE OF FENCE FABRIC SHALL EXTEND TO FINISHED GRADE.
3. SITE FENCE SHALL BE 6'-0" FABRIC W/ 3 STRAND BARBED WIRE FOR TOTAL HEIGHT OF 7'-0".
4. BARBED WIRE SHALL MEET ASTM A 121, CLASS 3 GALV. OR ASTM A 585, TYPE I, CLASS 2 COATING (NOT LESS THAN 0.8 OZ. PER SQ. FT.) AND SHALL BE THREE STRAND 12.5 GAGE w/4 POINT BARBS AT 5" O/C.
5. BOTTOM OF CONCRETE BASE SHALL BE SET BELOW FROSTLINE (SEE LOCAL CODE). WHERE SOIL BEARING CAPACITY IS LESS THAN 2000 PSF, INCREASE CONCRETE SURROUNDING FENCE POST FOUNDATION DIAMETERS BY 8", PROVIDE CONCRETE WITH A 28 DAY STRENGTH OF 3000 PSI (MIN.)
6. PROVIDE A DIAGONAL BRACE ROD AND TURN BUCKLE ON BOTH GATE LEAFS.
7. ALL RAILS AND BRACES SHALL BE SCHEDULE 40 STEEL PIPE, AND ALL FENCE POSTS SHALL BE SCHEDULE 40 STEEL PIPE, AND BE 2 OZ. GALVANIZED COATED.
8. CONTRACTOR SHALL ENSURE ALL POSTS ARE PLUMB.
9. ALL FENCE SHALL BE FABRICATED AND INSTALLED PER ASTM F2611-15, ASTM F567-14a AND CHAIN LINK FENCE MANUFACTURES INSTITUTE CLFMI-PM 2445.
10. CONTRACTOR SHALL FURNISH AND INSTALL ONE (1) MASTER LOCK LONG SHANK #175LH COMBINATION PADLOCK. COMBINATION TO BE SET AT 7011.

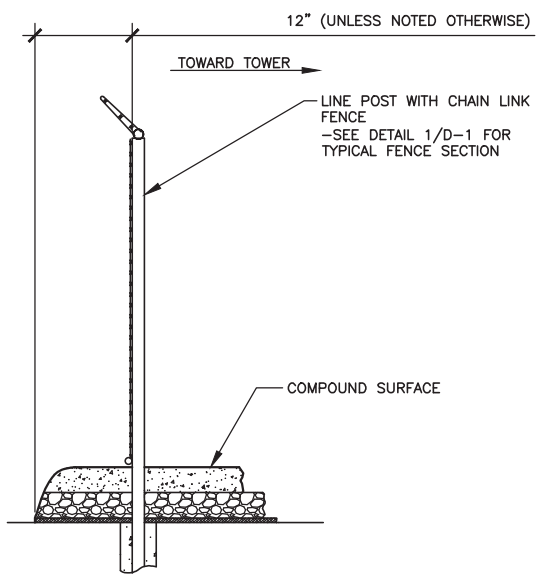

SITE AREA SURFACING 2 D-1

SCALE: N.T.S.

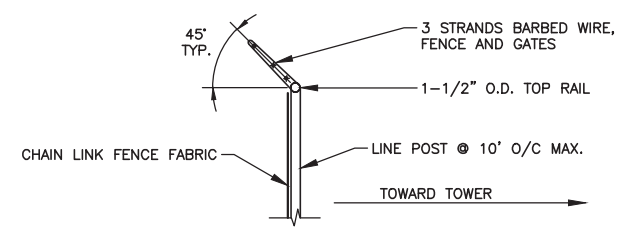

TYPICAL BARBED WIRE DETAIL 3 D-1

SCALE: N.T.S.

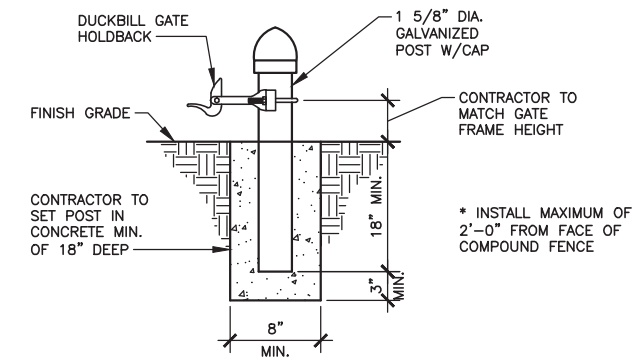

GATE KEEPER DETAIL 4 D-1

SCALE: N.T.S.

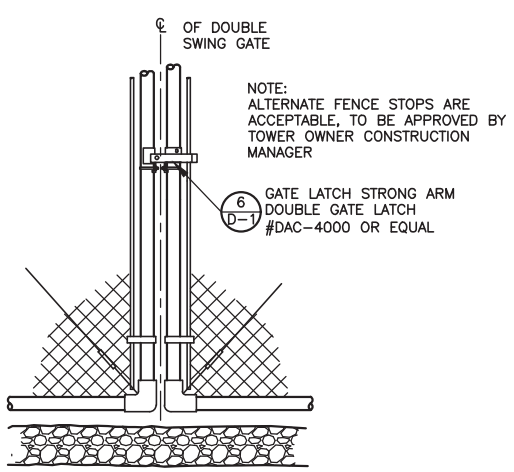

GATE LATCH DETAIL 5 D-1

SCALE: N.T.S.

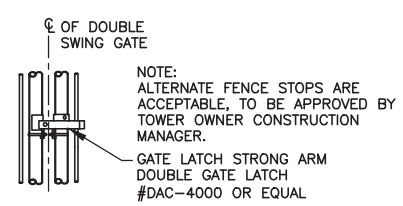

GATE LATCH DETAIL 6 D-1

SCALE: N.T.S.

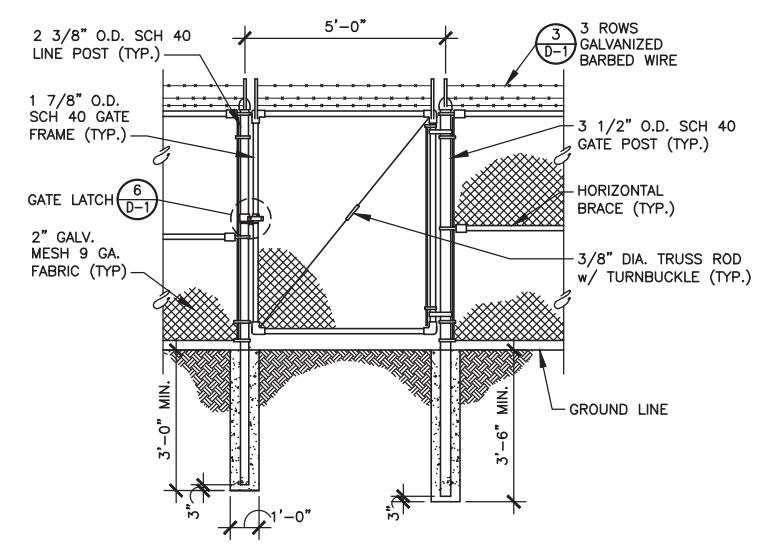

MAN GATE DETAIL 7 D-1

SCALE: N.T.S.

TOWERCOM
241 ATLANTIC BLVD, STE 201
NEPTUNE BEACH, FL 32266

LAB
49030 Pontiac Trail, Suite 100
Wixom, Michigan 48393
PHONE: (248) 705-9212

REV.	DATE	DESCRIPTION
A	08/09/23	ISSUED FOR REVIEW
B	08/21/23	REVISED CD
0	08/24/23	FINAL CD
1	01/25/24	REVISED FINAL CD
2	05/29/24	REVISED FINAL CD
3	02/20/25	REVISED FINAL CD

STATE OF KENTUCKY
DMITRIY V. ALBUL
25093
LICENSED PROFESSIONAL ENGINEER
02-21-25

SITE INFORMATION:
CK AGEE RIDGE
13401 N. HWY 127
ALBANY, KY 42602
CLINTON COUNTY

SITE NUMBER:
724991

SITE NAME:
CK AGEE RIDGE

PID NUMBER: 16933258
DRAWN BY: RC
CHECKED BY: PL
DATE: 08.09.23

SHEET TITLE:
FENCE DETAILS & NOTES

SHEET NUMBER:
D-1

MIK PAD & CANOPY REV 4.3.1 02/03/25

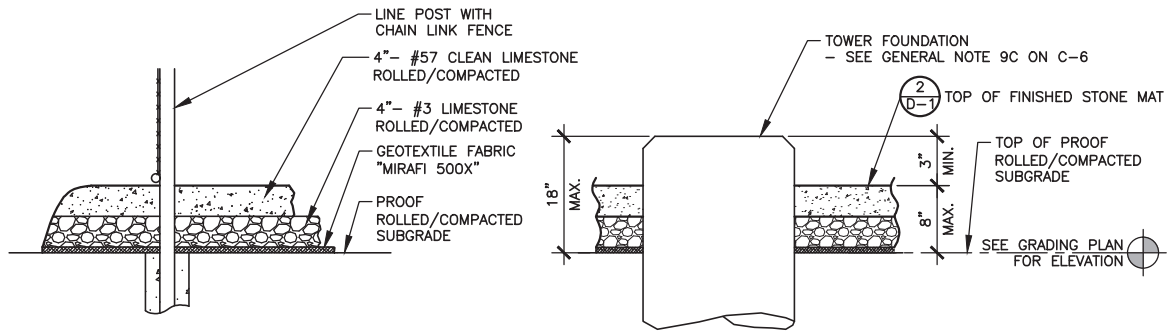

PARTIAL COMPOUND SECTION (1 / D–2)

SCALE: N.T.S.

NOTE:

1. CONTRACTOR SHALL PRIME & PAINT BOLLARDS OSHA YELLOW

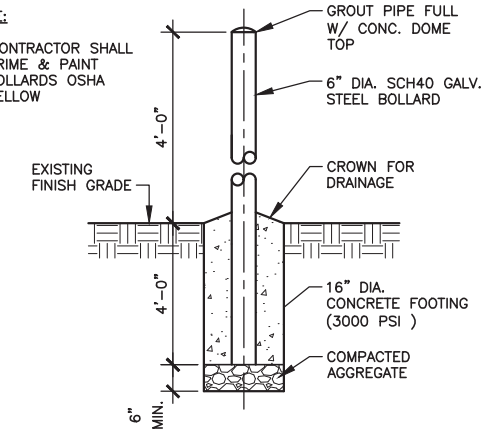

BOLLARD DETAIL (4 / D–2)

SCALE: N.T.S.

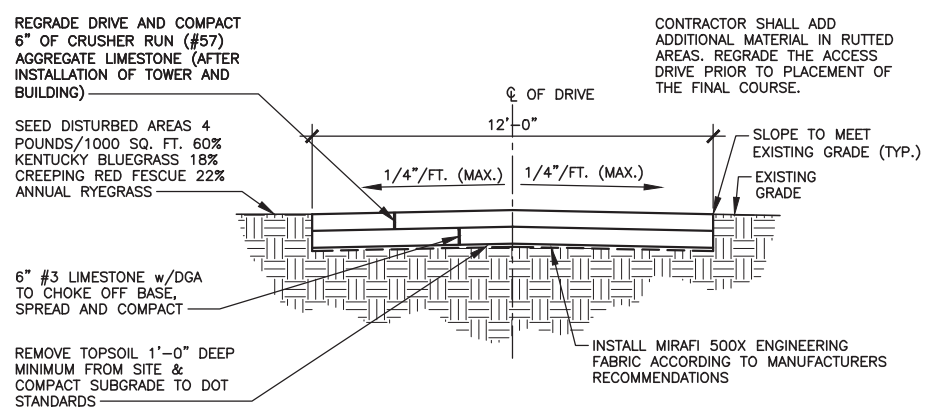

ACCESS DRIVE TYPICAL SECTION (2 / D–2)

SCALE: N.T.S.

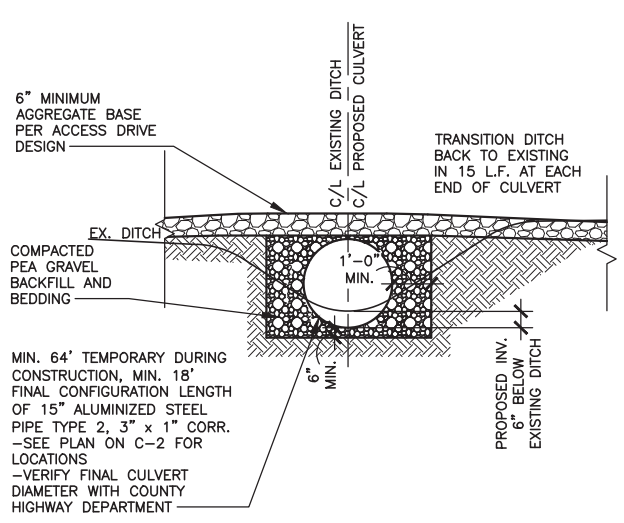

CULVERT DETAIL (3 / D–2)

SCALE: N.T.S.

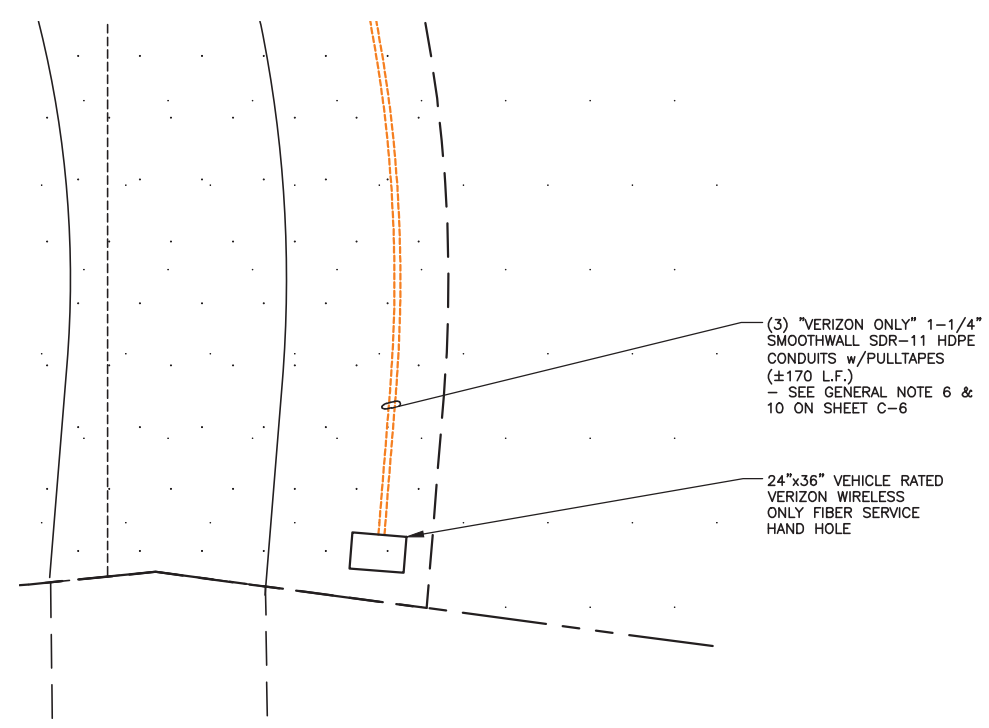

ENLARGED FIBER HAND HOLE PLAN AT R.O.W. (5 / D–2)

SCALE: 1/16" = 1'–0"

NORTH

TOWERCOM

241 ATLANTIC BLVD, STE 201
NEPTUNE BEACH, FL 32266

LAB

49030 Pontiac Trail, Suite 100
Wixom, Michigan 48393
PHONE: (248) 705-9212

REV.	DATE	DESCRIPTION
A	08/09/23	ISSUED FOR REVIEW
B	08/21/23	REVISED CD
0	08/24/23	FINAL CD
1	01/25/24	REVISED FINAL CD
2	05/29/24	REVISED FINAL CD
3	02/20/25	REVISED FINAL CD

STATE OF KENTUCKY
DMITRIY V. ALBUL
25093
LICENSED PROFESSIONAL ENGINEER

02-21-25

SITE INFORMATION:

CK AGEE RIDGE

13401 N. HWY 127
ALBANY, KY 42602
CLINTON COUNTY

SITE NUMBER:
724991

SITE NAME:
CK AGEE RIDGE

PID NUMBER: 16933258

DRAWN BY: RC
CHECKED BY: PL
DATE: 08.09.23

SHEET TITLE:

SITE DETAILS

SHEET NUMBER:

D–2

MIK PAD & CANOPY REV 4.3.1 02/03/25

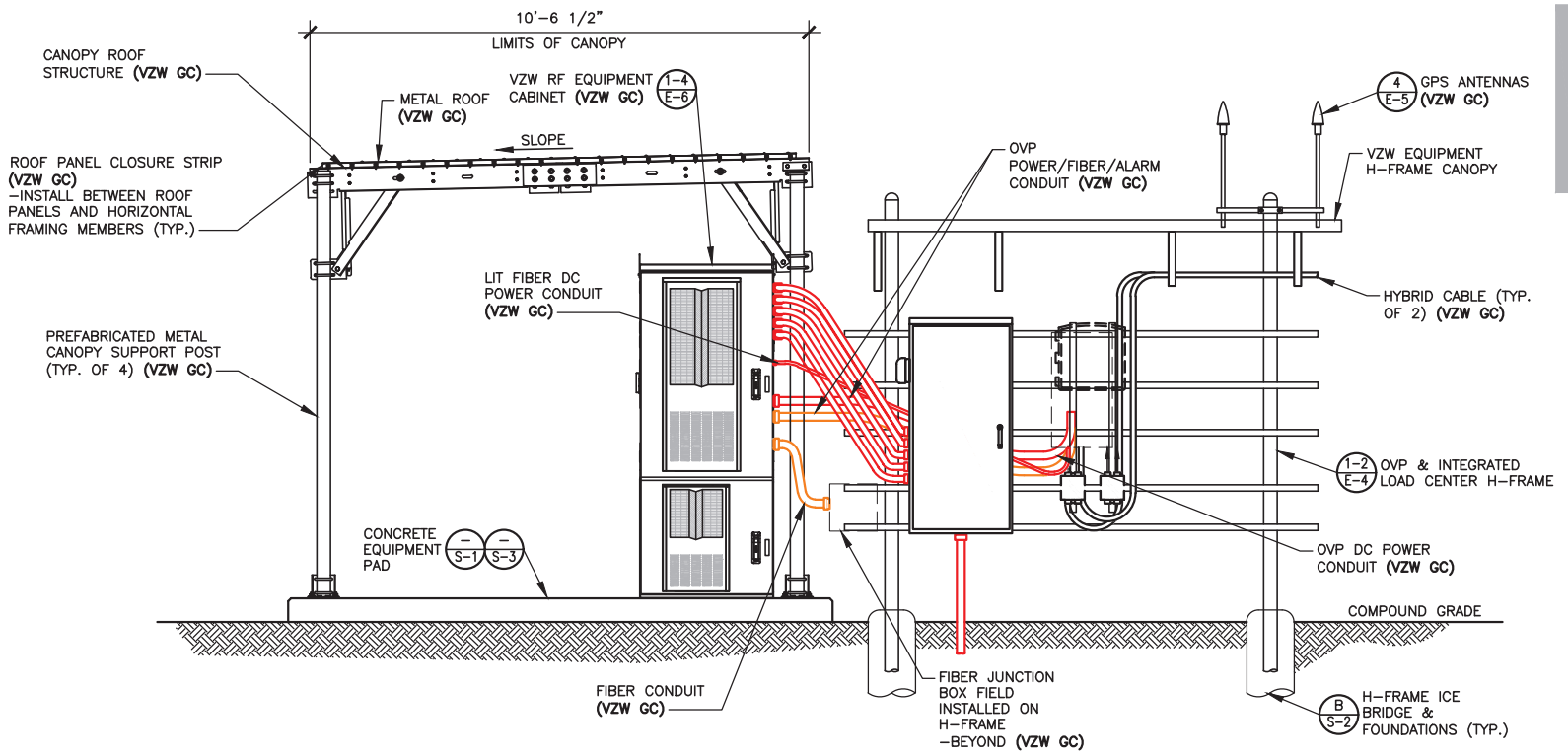

NOTE:

VERIZON WIRELESS 6'-6"x10'-6" RADIO EQUIPMENT CANOPY (CANOPY DWGS. SUPPLIED BY MANUFACTURER) (VZW GC) -COMMSCOPE P/N 860676982-001

FRONT ELEVATION

SCALE: 1/4" = 1'-0"

NOTE:

CANOPY ROOF PANELS PROFILE R/PBR. PROVIDE 1.7lb DENSITY POLYETHYLENE FOAM PANEL CLOSURE STRIPS TO MATCH PROFILE. AS MANUFACTURED BY: SEALTITE BUILDING FASTENERS "ST CLOSURE" STRIPS OR EQUAL (VERIFY PROFILE WITH ROOF PANELS SUPPLIED WITH CANOPY)

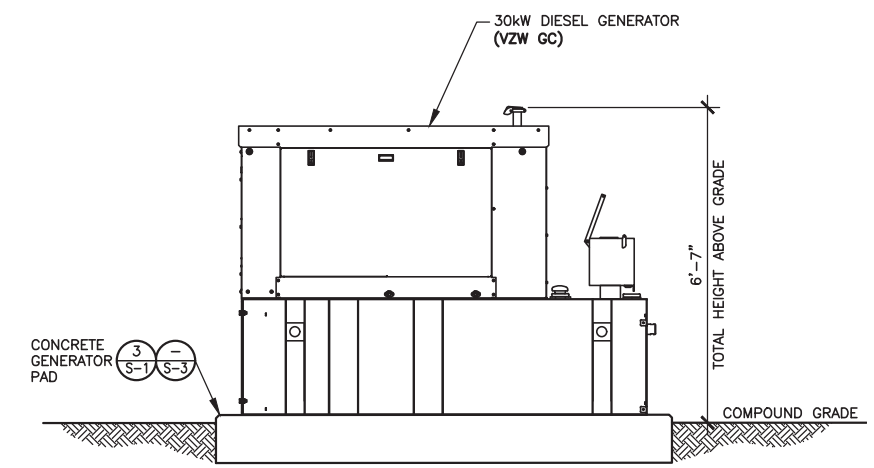

GENERATOR ELEVATION

SCALE: 1/4" = 1'-0"

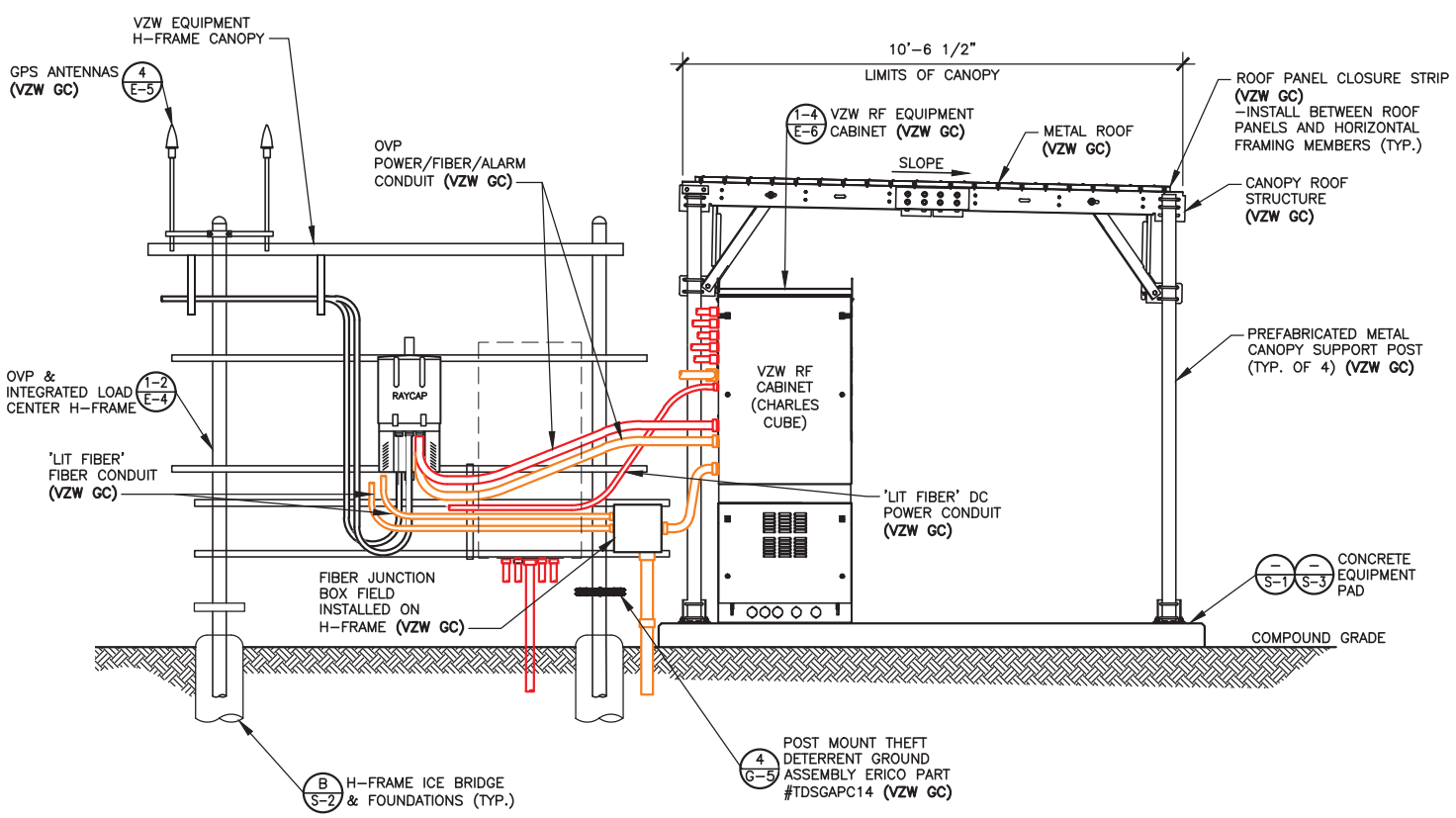

REAR ELEVATION

SCALE: 1/4" = 1'-0"

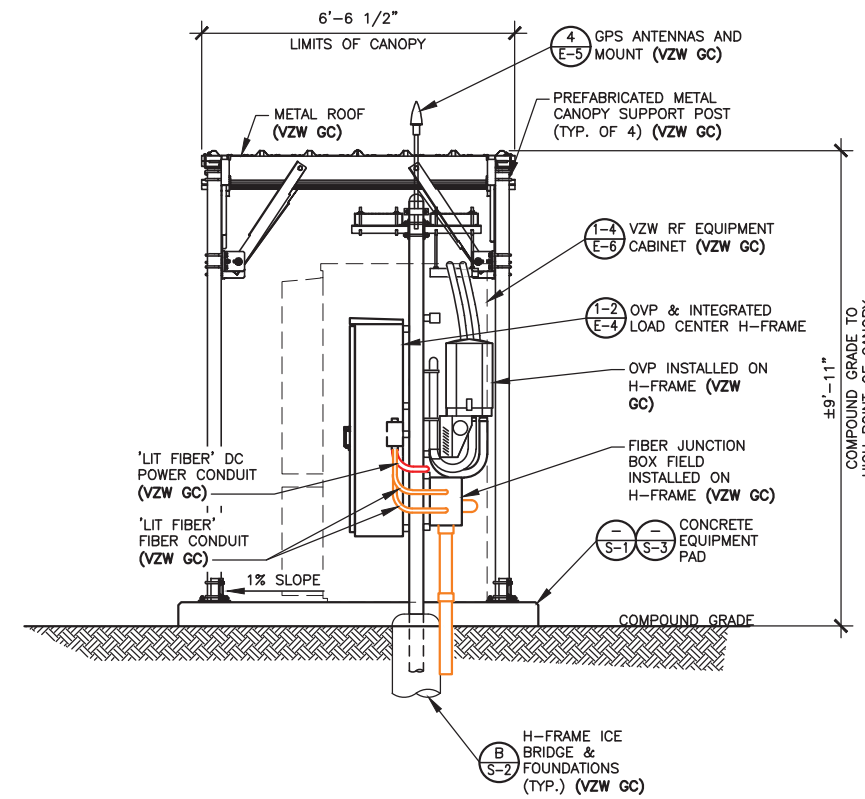

RIGHT ELEVATION

SCALE: 1/4" = 1'-0"

TOWERCOM

241 ATLANTIC BLVD, STE 201
NEPTUNE BEACH, FL 32266

LAB

49030 Pontiac Trail, Suite 100
Wixom, Michigan 48393
PHONE: (248) 705-9212

REV.	DATE	DESCRIPTION
A	08/09/23	ISSUED FOR REVIEW
B	08/21/23	REVISED CD
0	08/24/23	FINAL CD
1	01/25/24	REVISED FINAL CD
2	05/29/24	REVISED FINAL CD
3	02/20/25	REVISED FINAL CD

STATE OF KENTUCKY
DMITRIY V. ALBUL
25093
LICENSED PROFESSIONAL ENGINEER

02-21-25

SITE INFORMATION:

CK AGEE RIDGE

13401 N. HWY 127
ALBANY, KY 42602
CLINTON COUNTY

SITE NUMBER:

724991

SITE NAME:

CK AGEE RIDGE

PID NUMBER: 16933258

DRAWN BY: RC
CHECKED BY: PL
DATE: 08.09.23

SHEET TITLE:

EQUIPMENT PAD & CANOPY ELEVATIONS

SHEET NUMBER:

D-3

MIK PAD & CANOPY REV 4.3.1 02/03/25

STANDARD SITE SIGNAGE:

	REQUIRED SIGNS:	LOCATIONS:
C1	• N.O.C. "IN CASE OF EMERGENCY"	FRONT ACCESS DOOR OF CABINET (SEE FIGURE 1)
C2	• NOTICE (CONTACT INFO)	
C3	• COMBINATION WARNING (SEE NOTE 2)	FRONT ACCESS DOOR OF EACH CABINET WITH BATTERIES (SEE FIGURE 1)
C4	• COMBINATION WARNING (SEE NOTE 2)	
C5	• S.D.S.	INSIDE FRONT ACCESS DOOR OF EACH CABINET WITH BATTERIES

–N.O.C. STANDS FOR "NETWORK OPERATIONS CENTER"
–S.D.S. STANDS FOR "SAFETY DATA SHEET"

NOTES:

1. CONTRACTOR SHALL INSTALL ALL SIGNS ON THE FRONT OF EACH CABINET. ALL SIGNS CAN BE PLACED ON ONLY THE UPPER DOOR, IF SPACE IS AVAILABLE.
2. CONTRACTOR SHALL INSTALL SIGN C3 OR C4 BASED ON THE TYPE OF BATTERY THAT IS BEING INSTALLED.

C1

C2

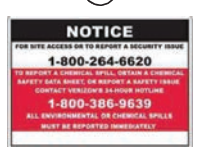

C5

C3

C4

FRONT

REAR

FIGURE 1 – EQUIPMENT CABINET SIGNAGE

N/A

FIGURE 5 – EME SIGN

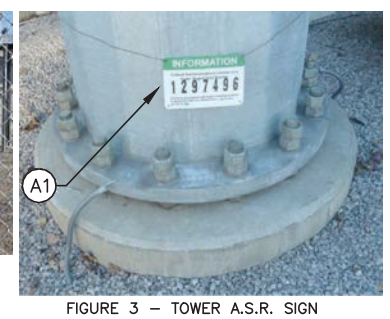

FIGURE 3 – TOWER A.S.R. SIGN

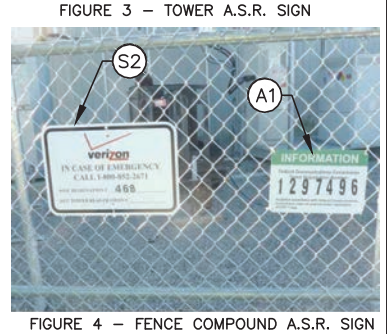

FIGURE 4 – FENCE COMPOUND A.S.R. SIGN

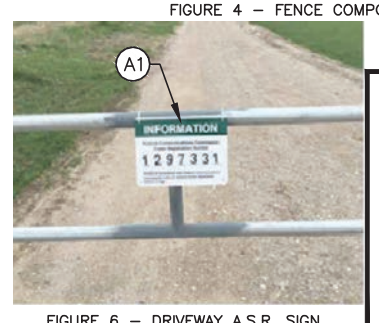

FIGURE 6 – DRIVEWAY A.S.R. SIGN

SIGNAGE FOR EACH GENERATOR FUEL TYPE:

DIESEL GENERATOR

	REQUIRED SIGNS:	LOCATIONS:
D1	• "DANGER DIESEL FUEL"	INSTALL ON GENERATOR (SEE FIGURE 6)
D2	• HAZARD DIAMOND	
D3	• NOTICE SIGN	
D4	• FUEL TANK CAPACITY	INSTALL ON FUEL TANK

*SIGNS D1 AND D2 MAY BE COMBINED TO A SINGLE SIGN

D1

D2

D3

D4

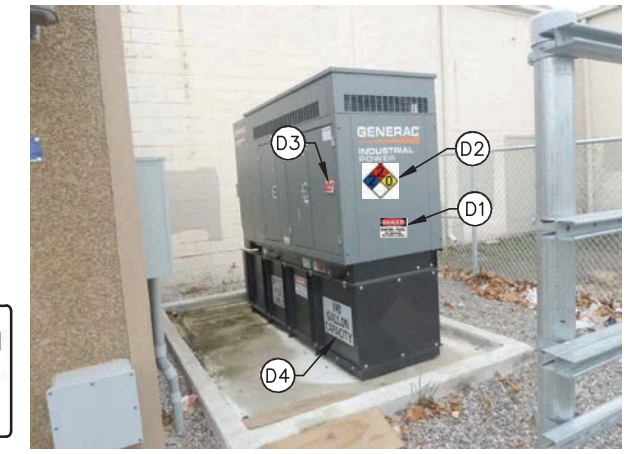

FIGURE 6 – DIESEL GENERATOR SIGNAGE

E.M.E. SIGNAGE NOTES:

1. CONTRACTOR SHALL AT A MINIMUM INSTALL "NOTICE" ELECTROMAGNETIC ENVIRONMENT (E.M.E.) SIGNAGE ON COMPOUND FENCE AT ALL SITES. (SEE FIGURE 5)
2. CONTRACTOR SHALL VERIFY WITH THE VERIZON CONSTRUCTION MANAGER IF ANY ADDITIONAL E.M.E. SIGNAGE IS REQUIRED AT A SITE PRIOR TO SIGNAGE INSTALLATION. (SEE FIGURE 9)

S1

E1

E2

E3

E4

B1

FIGURE 9 – TYPICAL E.M.E. SIGNAGE

TOWERCOM
241 ATLANTIC BLVD, STE 201
NEPTUNE BEACH, FL 32266

LAB
49030 Pontiac Trail, Suite 100
Wixom, Michigan 48393
PHONE: (248) 705-9212

REV.	DATE	DESCRIPTION
A	08/09/23	ISSUED FOR REVIEW
B	08/21/23	REVISED CD
0	08/24/23	FINAL CD
1	01/25/24	REVISED FINAL CD
2	05/29/24	REVISED FINAL CD
3	02/20/25	REVISED FINAL CD

STATE OF KENTUCKY
DMITRIY V. ALBUL
25093
LICENSED PROFESSIONAL ENGINEER
02-21-25

SITE INFORMATION:
CK AGEE RIDGE
13401 N. HWY 127
ALBANY, KY 42602
CLINTON COUNTY

SITE NUMBER:
724991

SITE NAME:
CK AGEE RIDGE

PID NUMBER: 16933258

DRAWN BY: RC
CHECKED BY: PL
DATE: 08.09.23

SHEET TITLE:
VERIZON WIRELESS SIGNAGE (REFERENCE ONLY)

SHEET NUMBER:
D–4

MIK PAD & CANOPY REV 4.3.1 02/03/25

NOTES:

VERIZON WIRELESS SITE ID SIGN, RFE SIGNS, NOC INFORMATION SIGN AND ALL OTHER SIGNAGE NOT REFERENCED IN THIS DRAWING WILL BE FURNISHED AND INSTALLED BY VERIZON WIRELESS PERSONELL PER VERIZON WIRELESS RFC SIGNAGE & DEMARCATION POLICY.

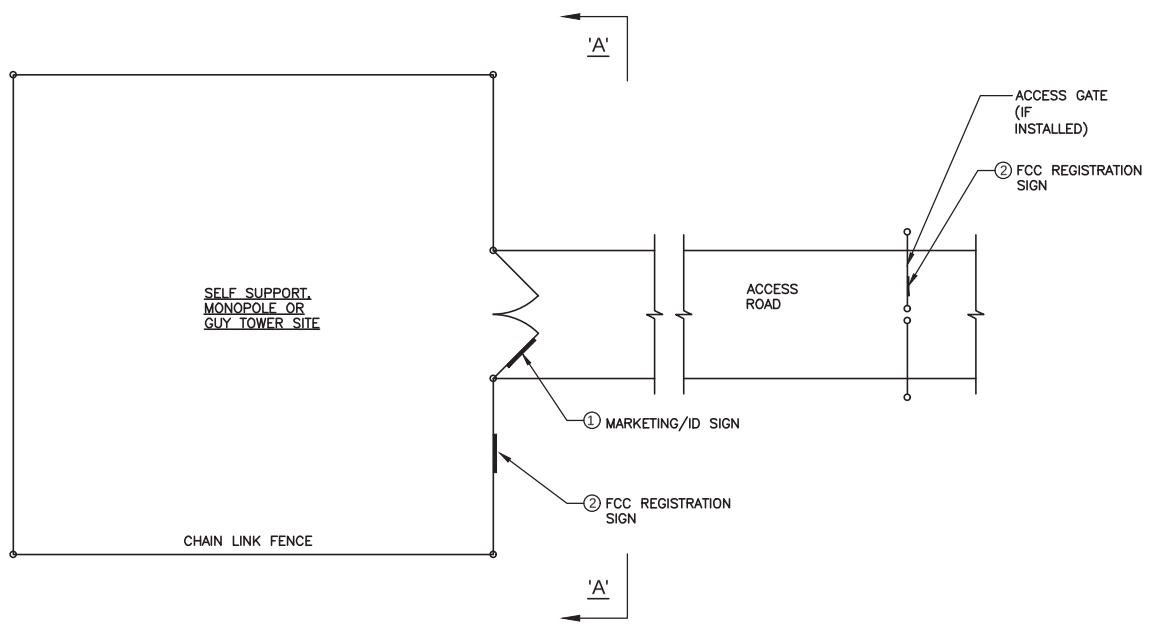

TYPICAL SITE FENCE SIGNAGE PLAN

SCALE: N. T. S.

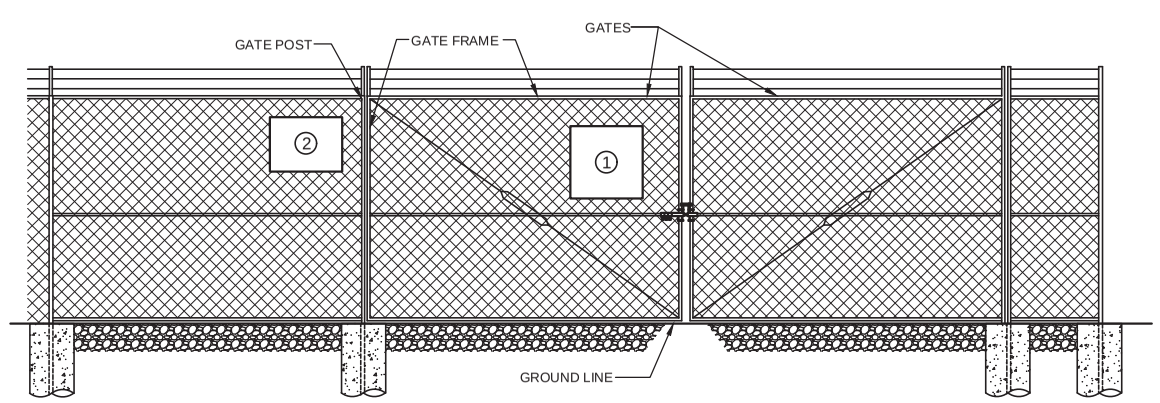

ELEVATION "A–A"

SCALE: N. T. S.

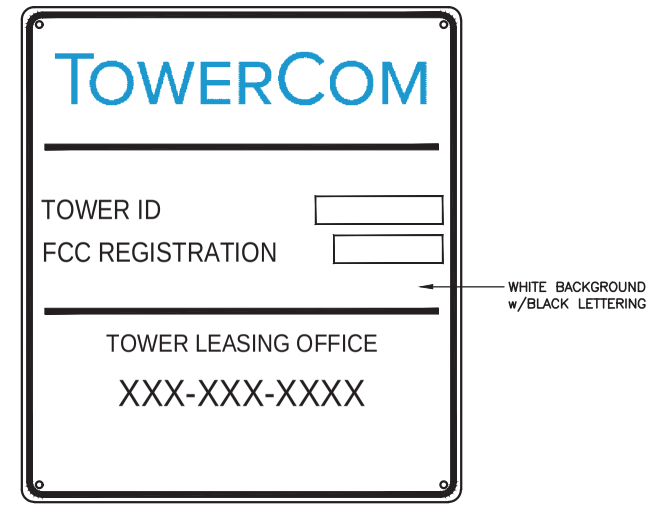

MARKETING/ID SIGN 1

24" WIDE x 24" HIGH

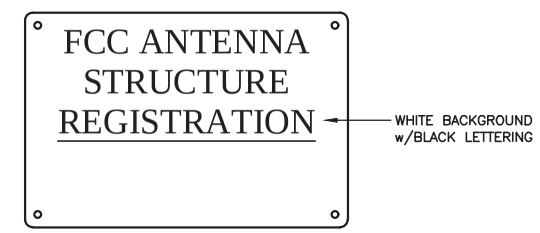

FCC REGISTRATION SIGN 2

24" WIDE x 18" HIGH

TOWERCOM

241 ATLANTIC BLVD, STE 201
NEPTUNE BEACH, FL 32266

LAB

49030 Pontiac Trail, Suite 100
Wixom, Michigan 48393
PHONE: (248) 705-9212

REV.	DATE	DESCRIPTION
A	08/09/23	ISSUED FOR REVIEW
B	08/21/23	REVISED CD
0	08/24/23	FINAL CD
1	01/25/24	REVISED FINAL CD
2	05/29/24	REVISED FINAL CD
3	02/20/25	REVISED FINAL CD

STATE OF KENTUCKY
DMITRIY V. ALBUL
25093
LICENSED PROFESSIONAL ENGINEER

02-21-25

SITE INFORMATION:

CK AGEE RIDGE

13401 N. HWY 127
ALBANY, KY 42602
CLINTON COUNTY

SITE NUMBER:
724991

SITE NAME:
CK AGEE RIDGE

PID NUMBER: 16933258

DRAWN BY: RC
CHECKED BY: PL
DATE: 08.09.23

SHEET TITLE:
TOWER OWNER SITE FENCE SIGNAGE (REFERENCE ONLY)

SHEET NUMBER:
D–5

MIK PAD & CANOPY REV 4.3.1 02/03/25

NOTE:

ALL GENERATOR CONDUITS SHALL BE INSTALLED AND CAPPED WEATHERTIGHT FOR FUTURE GENERATOR INSTALLATION IF REQUIRED

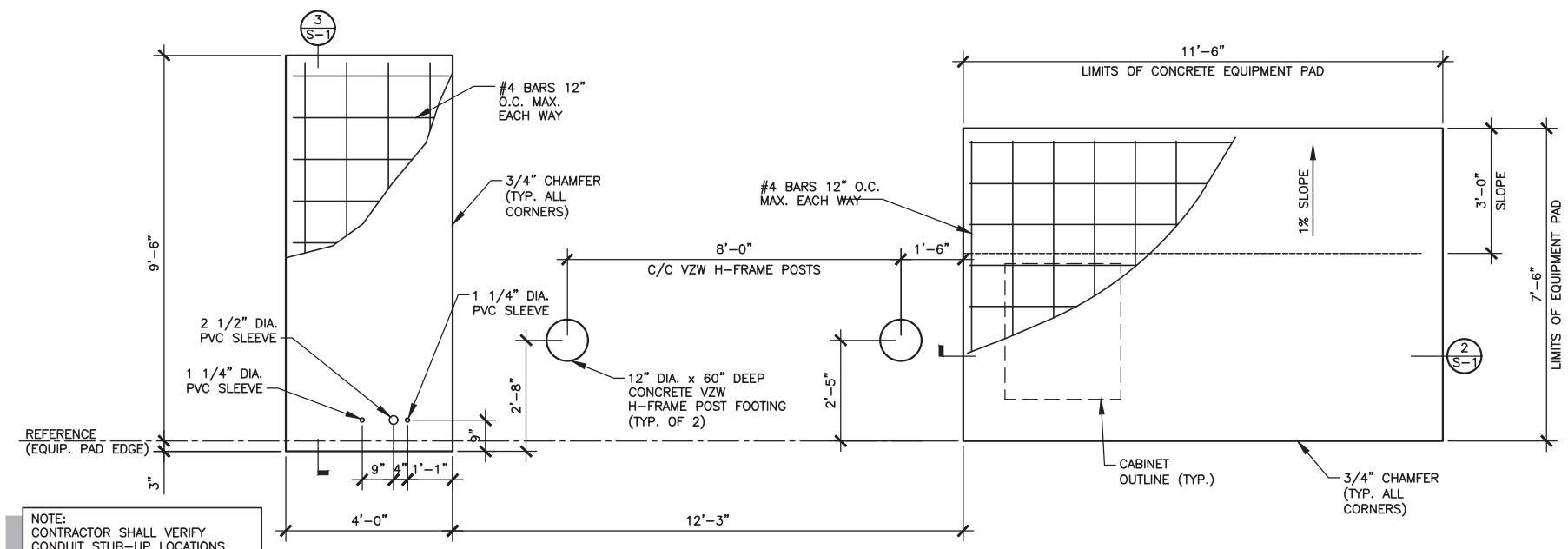

NOTE:
CONTRACTOR SHALL VERIFY CONDUIT STUB-UP LOCATIONS WITH VERIZON WIRELESS SPECIFIED GENERATOR PRIOR TO INSTALLATION

EQUIPMENT AND GENERATOR PAD FOUNDATIONS PLAN

1 / S-1

SCALE: 1/4" = 1'-0"

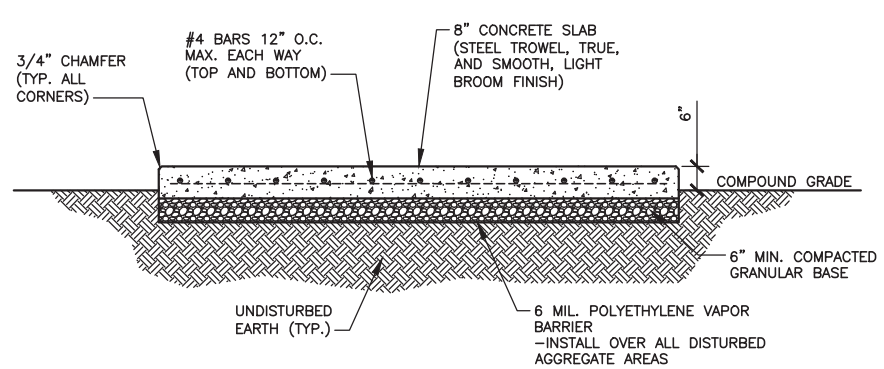

EQUIPMENT PAD FOUNDATION SECTION

2 / S-1

SCALE: 1/4" = 1'-0"

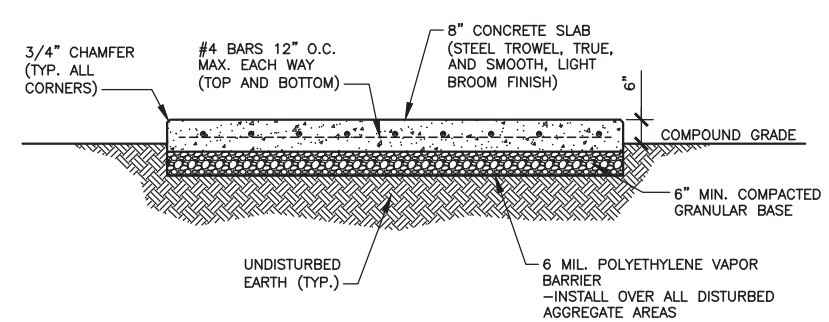

GENERATOR PAD FOUNDATION SECTION

3 / S-1

SCALE: 1/4" = 1'-0"

STRUCTURAL NOTES

1. CANOPY SYSTEM DESIGN LOADINGS:

ROOF SNOW LOAD	60 PSF
DEAD LOADS	ACTUAL MATERIAL WEIGHTS
BASIC WIND SPEED	110 MPH

DESIGN CODES
BUILDINGS AND OTHER STRUCTURES: ASCE 7-10, ASCE 7-16
ANTENNA SUPPORTS, RELATED APPURTENANCES AND TOWERS: TIA-5053, TIA-222-H AND TIA-222-G

2. BUILDING FOUNDATION SYSTEM:

THE SUBSURFACE REPORT WAS PROVIDED BY XYZ ENGINEERING, INC., DATED MONTH DAY, YEAR.

ALLOWABLE BEARING CAPACITY BLDG. FOOTINGS **** PSF

ALL CONTRACTORS SHALL EXERCISE GREAT CARE DURING EXCAVATION. ALL CONTRACTORS SHALL PREDETERMINE UTILITY LOCATIONS AND NOTIFY THE ENGINEER IMMEDIATELY IF DEVIATION FROM PLANS EXIST.

THE SUBSURFACE REPORT IS NOT TO BE CONSIDERED AS A COMPLETE RECORD OF THE EXISTING CONDITIONS AT THE SITE. THE CONTRACTOR SHALL VERIFY ALL EXISTING SITE CONDITIONS, INCLUDING SUBSURFACE CONDITIONS. THE CONTRACTOR SHALL OBTAIN PERMISSION FROM THE OWNER PRIOR TO SITE ENTRY FOR THE PURPOSE OF CONDUCTING SOIL TESTING AND VERIFICATION OF EXISTING CONDITIONS.

FOUNDATION SUBGRADES SHALL BE HAND TRIMMED AND COMPACTED. ALL BACKFILL TO BE COMPACTED TO 95% MAXIMUM DRY DENSITY IN ACCORDANCE WITH ASTM D-1557.

3. CONCRETE WORK:

CONCRETE CYLINDERS SHALL BE TAKEN AND TESTED BY A QUALIFIED CONCRETE TESTING COMPANY. THE GENERAL CONTRACTOR SHALL PROVIDE ONE (1) CYLINDER SAMPLE TAKEN PER TRUCK OR FOUR (4) TOTAL FOR BUILDING FOUNDATION AND THE CONCRETE MUST MEET A 4" SLUMP. THE GENERAL CONTRACTOR SHALL PROVIDE THREE (3) COPIES OF TESTING RESULTS TO VERIZON WIRELESS AND TOWER OWNER CONSTRUCTION MANAGERS. FAILURE TO PROVIDE WRITTEN DOCUMENTATION WILL RESULT IN A DEDUCTION FROM THE CONTRACT. THE CONTRACTOR WILL BE HELD RESPONSIBLE FOR ANY ADDITIONAL COSTS IN TESTING DUE TO DELAYS BY THE GENERAL CONTRACTOR OR HIS SUBCONTRACTORS. USE AIR ENTRAINMENT IN EXTERIOR SLABS.

SPECIFICATIONS	– LATEST EDITION OF ACI-318 AS ADOPTED BY THE STATE OF KENTUCKY 2"-4" SLUMP	– BLDG. FOUNDATION F'c = 4000 PSI @ 28 DAYS
MATERIALS	– REINFORCING – ANCHOR BOLTS	ASTM A615, GRADE 60 ASTM F1554 A36
REINFORCING COVERS	– FOOTINGS TOP BOTTOM/SIDES	 2" 3"

REINFORCING EMBEDMENT AND LAP SPLICES (INCHES) FOR 4000 PSI CONCRETE

BAR SIZE	ANCHORAGE	SPLICE (OTHER)	ANCHORAGE (TOP)	SPLICE (TOP)
#4	12"	25"	25"	33"

CHAMFER TOP CORNERS OF ALL FOUNDATIONS (3/4")

4. BURIED CABLE LOCATIONS INFORMATION

CONTACT KENTUCKY 811 48 HR. PRIOR TO DIGGING, GRADING, OR DRILLING 1-800-752-6007 OR 811

ADDITIONAL CONCRETE NOTES:

1. ALL CONCRETE CONSTRUCTION SHALL CONFORM TO ACI*96, "STANDARD SPECIFICATION FOR STRUCTURAL CONCRETE" AND ACI 305, 306 AND 307 UNLESS NOTED OTHERWISE.
2. ALL DETAILING, FABRICATION AND PLACING OF CONCRETE SHALL CONFORM TO ACI 318-11.
3. ALL CONCRETE EXPOSED TO WEATHER SHALL CONTAIN 6% (±1%) AIR ENTRAINMENT.
4. PROVIDE CORNER BARS AT ALL LOCATIONS WHERE REINFORCEMENT CHANGES DIRECTION.

Kentucky 811
Know what's below. Call before you dig.
Call Monday thru Friday – 7 am. to 6 pm.
1-800-752-6007
PER KENTUCKY STATE LAW, IT IS AGAINST THE LAW TO EXCAVATE WITHOUT NOTIFYING THE UNDERGROUND LOCATION SERVICE TWO (2) WORKING DAYS BEFORE COMMENCING WORK.

TOWERCOM
241 ATLANTIC BLVD, STE 201
NEPTUNE BEACH, FL 32266

LAB
49030 Pontiac Trail, Suite 100
Wixom, Michigan 48393
PHONE: (248) 705-9212

REV.	DATE	DESCRIPTION
A	08/09/23	ISSUED FOR REVIEW
B	08/21/23	REVISED CD
0	08/24/23	FINAL CD
1	01/25/24	REVISED FINAL CD
2	05/29/24	REVISED FINAL CD
3	02/20/25	REVISED FINAL CD

STATE OF KENTUCKY
DMITRIY V. ALBUL
25093
LICENSED PROFESSIONAL ENGINEER
02-21-25

SITE INFORMATION:
CK AGEE RIDGE
13401 N. HWY 127
ALBANY, KY 42602
CLINTON COUNTY

SITE NUMBER:
724991

SITE NAME:
CK AGEE RIDGE

PID NUMBER: 16933258

DRAWN BY: RC
CHECKED BY: PL
DATE: 08.09.23

SHEET TITLE:
EQUIPMENT PAD FOUNDATION PLAN, DETAILS AND STRUCTURAL NOTES

SHEET NUMBER:
S-1

MIK PAD & CANOPY REV 4.3.1 02/03/25

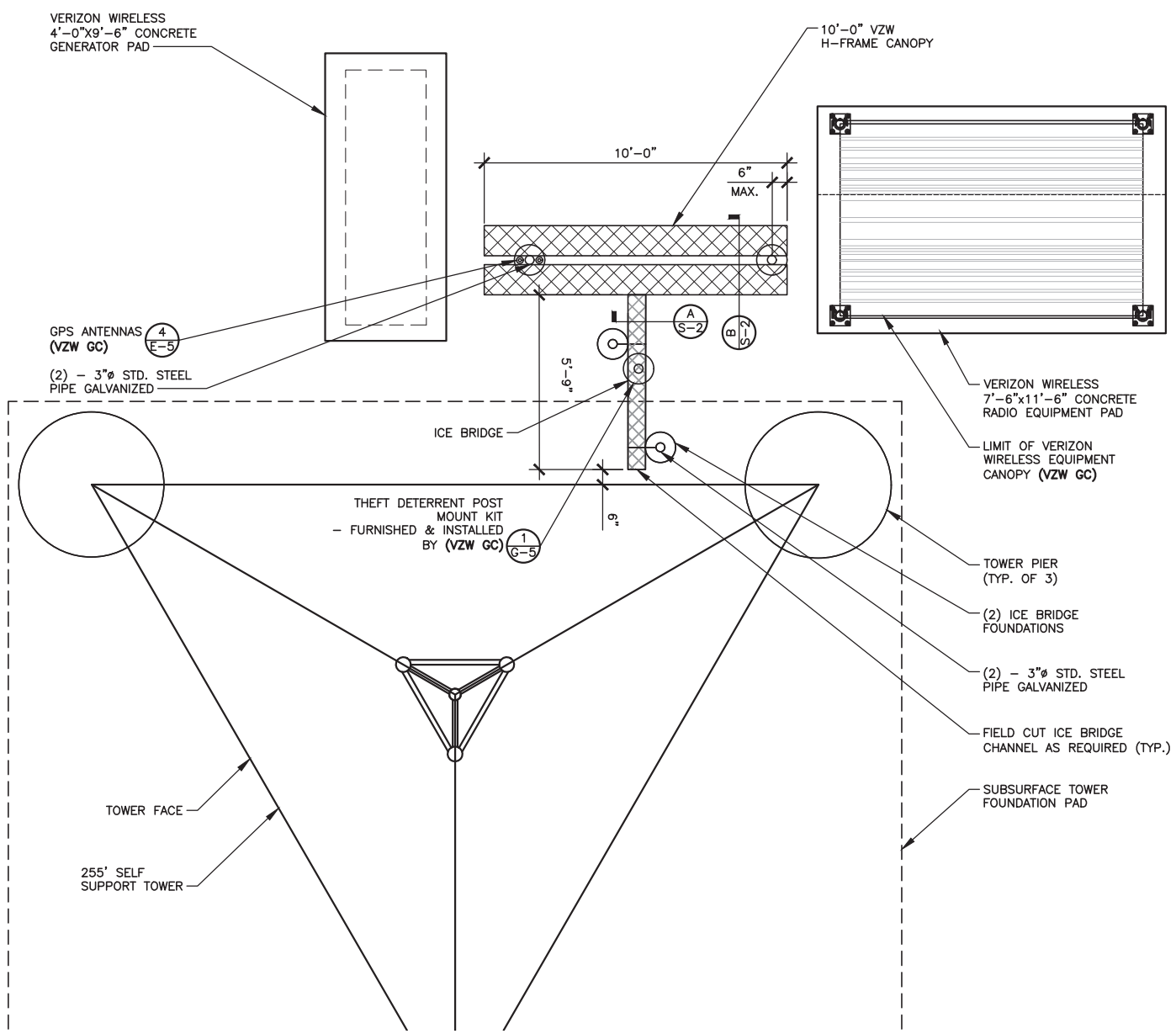

ICE BRIDGE PLAN

SCALE: 3/16" = 1'–0"

NORTH

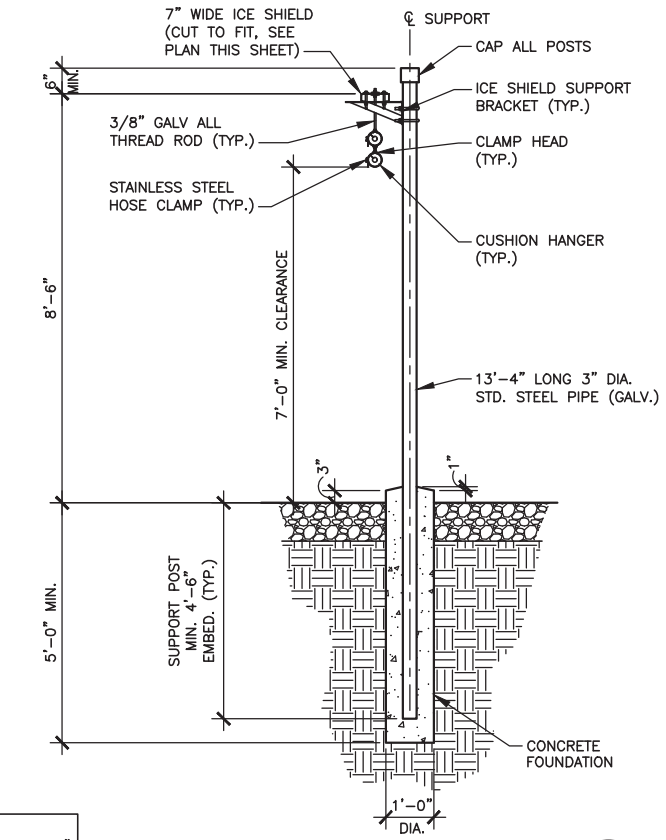

NOTE:
CONTRACTOR MAY SUBSTITUTE 12" ICE BRIDGE FOR THE 7" SECTION TO THE TOWER IF NO ADDITIONAL COST TO VZW

ICE BRIDGE SECTION

SCALE: 1/4" = 1'–0"

A
S–2

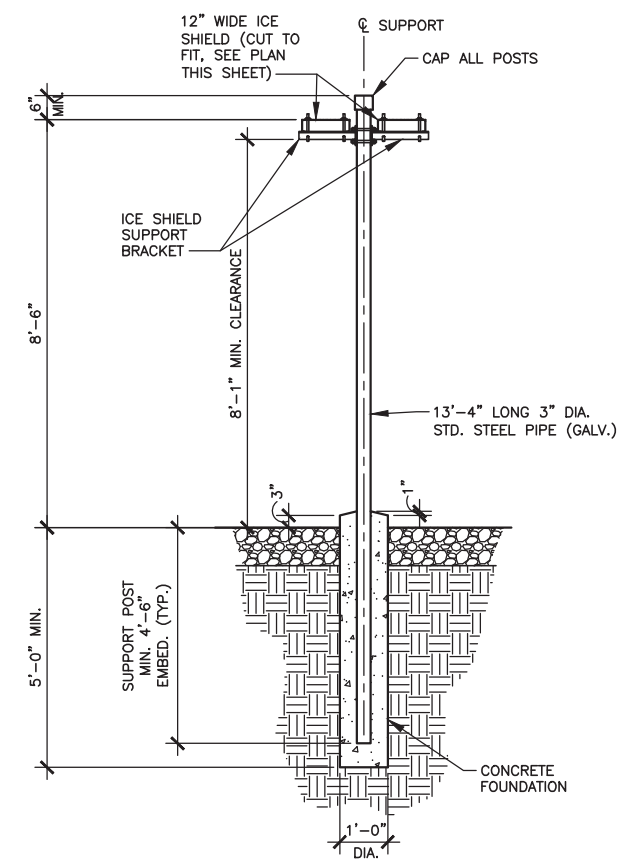

VZW H–FRAME CANOPY SECTION

SCALE: 1/4" = 1'–0"

B
S–2

Kentucky 811
Know what's below.
Call before you dig.
Call Monday thru Friday – 7 am. to 6 pm.
1-800-752-6007
PER KENTUCKY STATE LAW, IT IS AGAINST THE LAW TO EXCAVATE WITHOUT NOTIFYING THE UNDERGROUND LOCATION SERVICE TWO (2) WORKING DAYS BEFORE COMMENCING WORK.

TOWERCOM
241 ATLANTIC BLVD, STE 201
NEPTUNE BEACH, FL 32266

LAB
49030 Pontiac Trail, Suite 100
Wixom, Michigan 48393
PHONE: (248) 705-9212

REV.	DATE	DESCRIPTION
A	08/09/23	ISSUED FOR REVIEW
B	08/21/23	REVISED CD
0	08/24/23	FINAL CD
1	01/25/24	REVISED FINAL CD
2	05/29/24	REVISED FINAL CD
3	02/20/25	REVISED FINAL CD

STATE OF KENTUCKY
DMITRIY V. ALBUL
25093
LICENSED PROFESSIONAL ENGINEER
02-21-25

SITE INFORMATION:
CK AGEE RIDGE
13401 N. HWY 127
ALBANY, KY 42602
CLINTON COUNTY

SITE NUMBER:
724991

SITE NAME:
CK AGEE RIDGE

PID NUMBER: 16933258
DRAWN BY: RC
CHECKED BY: PL
DATE: 08.09.23

SHEET TITLE:
ICE BRIDGE PLAN DETAILS

SHEET NUMBER:
S–2

MIK PAD & CANOPY REV 4.3.1 02/03/25

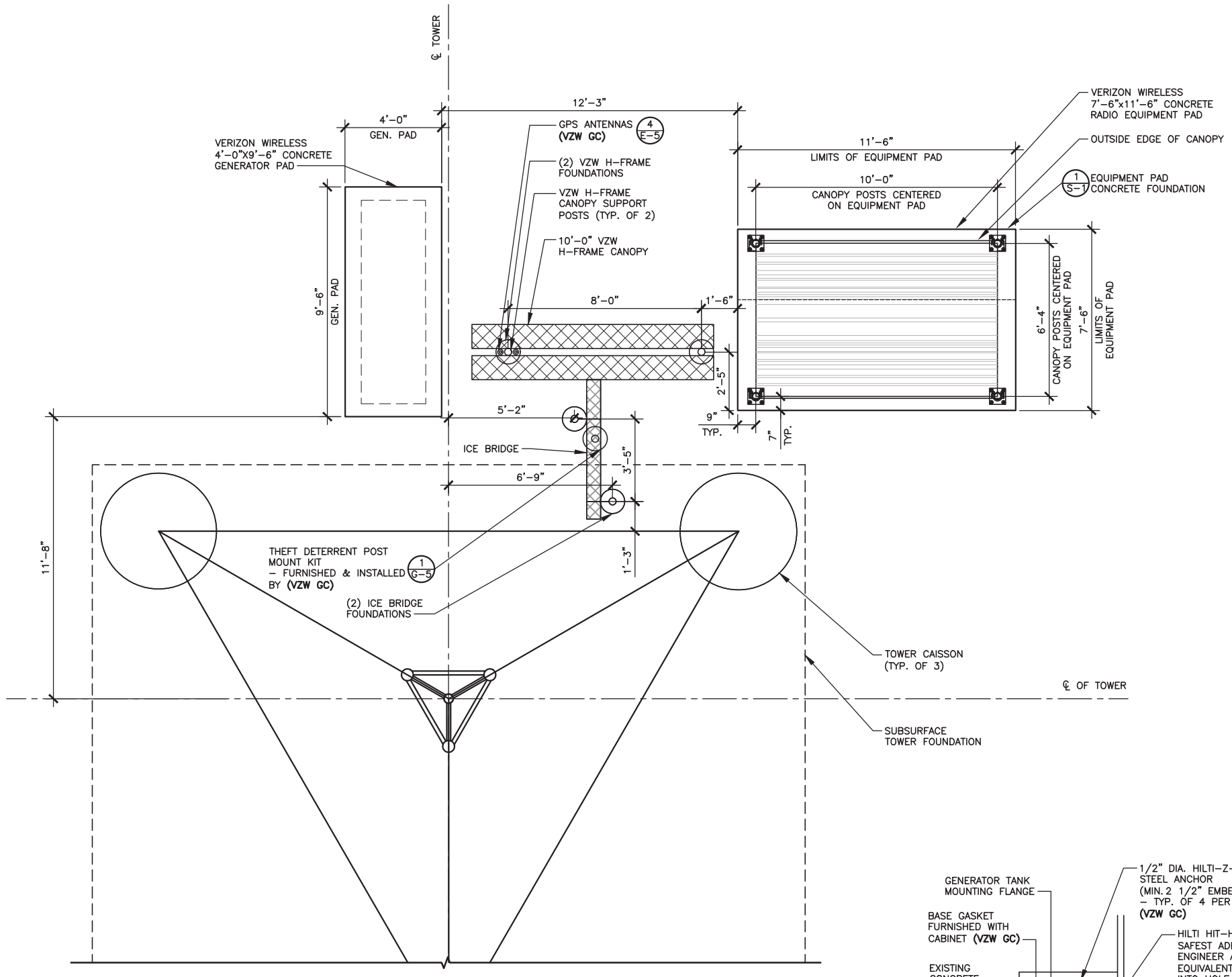

FOUNDATION PLAN

SCALE: 3/16" = 1'-0"

NORTH

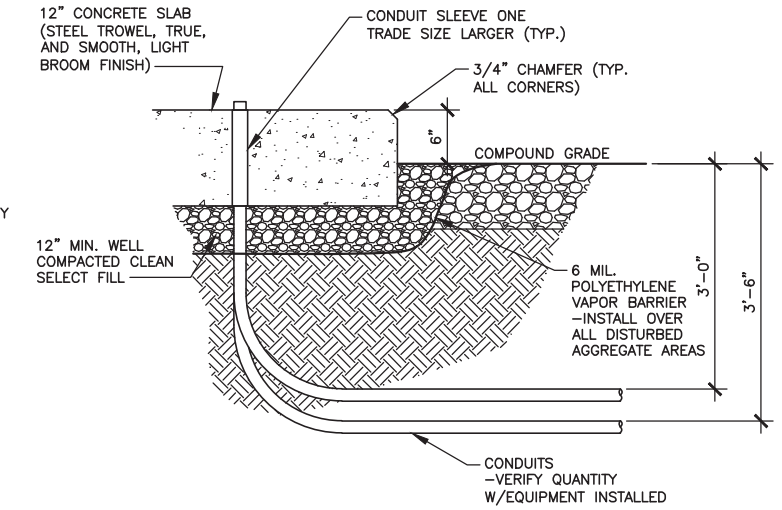

CONDUIT PENETRATION DETAIL

SCALE: N.T.S.

1 S-3

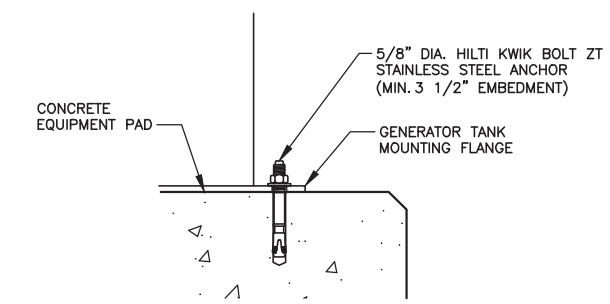

GENERATOR ANCHOR DETAIL

SCALE: N. T. S.
(VZW GC)

2 S-3

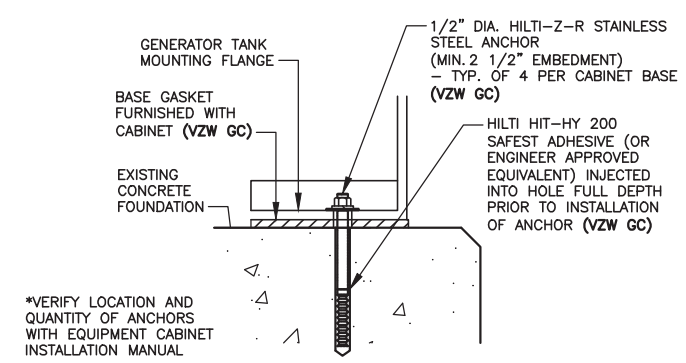

EQUIPMENT CABINET MOUNTING DETAIL

SCALE: N. T. S.

3 S-3

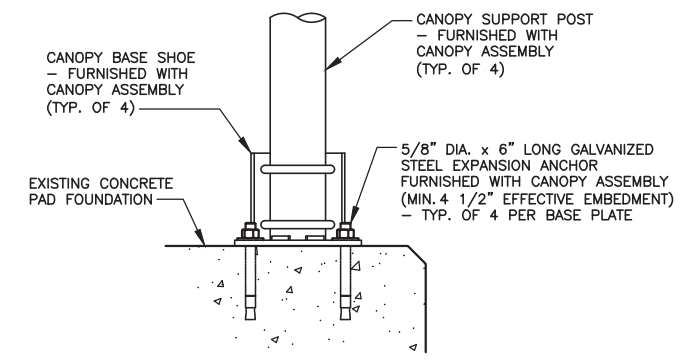

CANOPY BASE PLATE ANCHORING DETAIL

SCALE: N. T. S.

4 S-3

Kentucky 811
Know what's below. Call before you dig.
Call Monday thru Friday - 7 am. to 6 pm.
1-800-752-6007
PER KENTUCKY STATE LAW, IT IS AGAINST THE LAW TO EXCAVATE WITHOUT NOTIFYING THE UNDERGROUND LOCATION SERVICE TWO (2) WORKING DAYS BEFORE COMMENCING WORK.

TOWERCOM
241 ATLANTIC BLVD, STE 201
NEPTUNE BEACH, FL 32266

LAB
49030 Pontiac Trail, Suite 100
Wixom, Michigan 48393
PHONE: (248) 705-9212

REV.	DATE	DESCRIPTION
A	08/09/23	ISSUED FOR REVIEW
B	08/21/23	REVISED CD
0	08/24/23	FINAL CD
1	01/25/24	REVISED FINAL CD
2	05/29/24	REVISED FINAL CD
3	02/20/25	REVISED FINAL CD

STATE OF KENTUCKY
DMITRIY V. ALBUL
25093
LICENSED PROFESSIONAL ENGINEER
02-21-25

SITE INFORMATION:
CK AGEE RIDGE
13401 N. HWY 127
ALBANY, KY 42602
CLINTON COUNTY

SITE NUMBER:
724991

SITE NAME:
CK AGEE RIDGE

PID NUMBER: 16933258

DRAWN BY: RC
CHECKED BY: PL
DATE: 08.09.23

SHEET TITLE:
FOUNDATION PLAN DETAILS

SHEET NUMBER:
S-3

MIK PAD & CANOPY REV 4.3.1 02/03/25

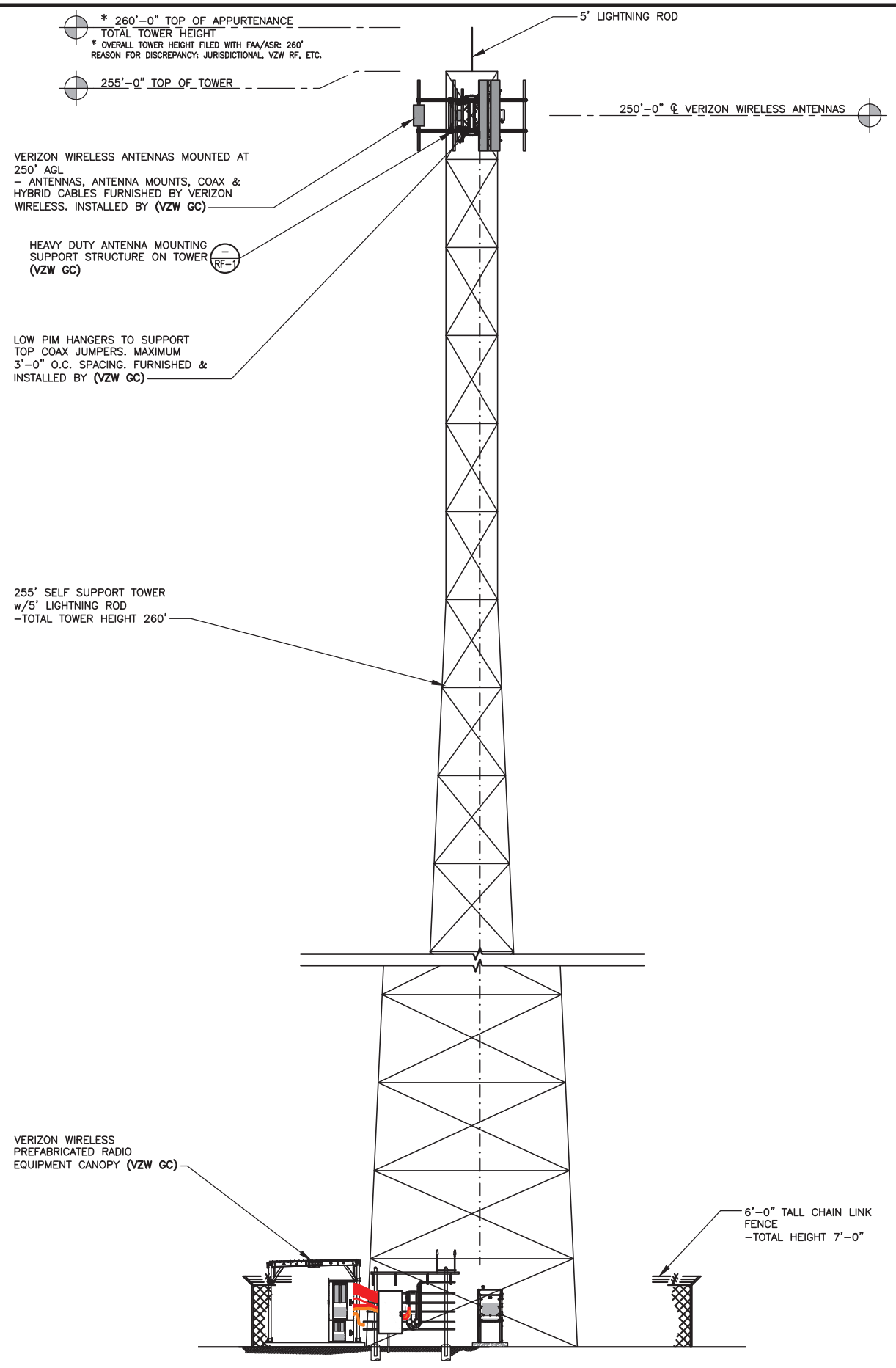

TOWER ELEVATION

SCALE: N.T.S.

1
TE-1

NOTE:

1. IT IS THE INSTALLING CONTRACTOR'S RESPONSIBILITY TO VERIFY ALL ANTENNA INFORMATION AGAINST FINAL RADIO ENGINEERING PLAN PROVIDED BY CELLCO PARTNERSHIP d/b/a VERIZON WIRELESS **(VZW GC)**

2. ALL TOWER LIGHTING SHALL BE INSTALLED AS REQUIRED BY THE FEDERAL AVIATION ADMINISTRATION AND RECOMMENDED BY THE USFWS INTERIM GUIDELINES (2000) FOR LIGHTING OF TOWERS OVER 200' IN HEIGHT.

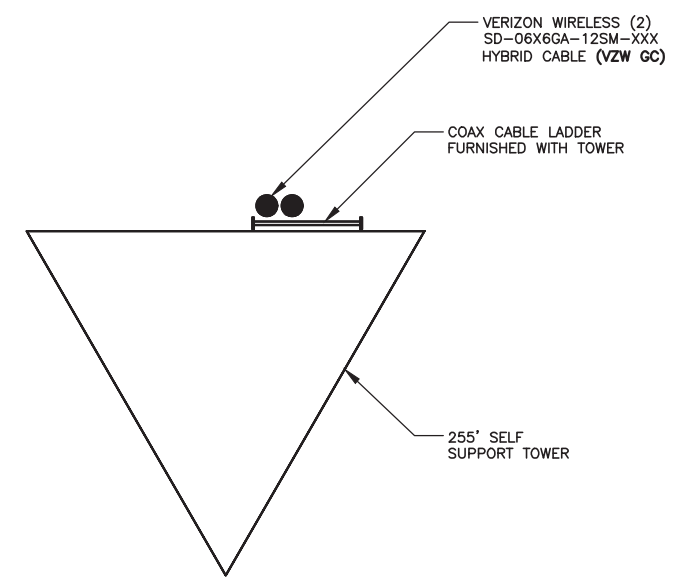

COAX PLAN

SCALE: N.T.S.

NORTH

TOWERCOM

241 ATLANTIC BLVD, STE 201
NEPTUNE BEACH, FL 32266

LAB

49030 Pontiac Trail, Suite 100
Wixom, Michigan 48393
PHONE: (248) 705-9212

REV.	DATE	DESCRIPTION
A	08/09/23	ISSUED FOR REVIEW
B	08/21/23	REVISED CD
0	08/24/23	FINAL CD
1	01/25/24	REVISED FINAL CD
2	05/29/24	REVISED FINAL CD
3	02/20/25	REVISED FINAL CD

STATE OF KENTUCKY
DMITRIY V. ALBUL
25093
LICENSED PROFESSIONAL ENGINEER

02-21-25

SITE INFORMATION:

CK AGEE RIDGE

13401 N. HWY 127
ALBANY, KY 42602
CLINTON COUNTY

SITE NUMBER:
724991

SITE NAME:
CK AGEE RIDGE

PID NUMBER: 16933258

DRAWN BY: RC
CHECKED BY: PL
DATE: 08.09.23

SHEET TITLE:

TOWER ELEVATION

SHEET NUMBER:

TE-1

MIK PAD & CANOPY REV 4.3.1 02/03/25

ALTERNATE FIBER CONDUIT BID SPECIFICATION

1. ONE 4" SCH40 PVC FIBER CONDUIT WITH PULLTAPE FOR FUTURE FIBER SERVICE OR AS SPECIFIED BY THE TOWER OWNER FOR THEIR OWNED FIBER CONDUIT AND (3) 1-1/4" PVC CONDUITS AND PULLTAPES SHALL BE INSTALLED FROM H-FRAME HOFFMAN BOX TO HANDHOLE MEET POINTS AT THE PUBLIC RIGHT-OF-WAY. EACH FIBER CONDUIT ROUTE SHALL HAVE ITS OWN DEDICATED HANDHOLE MODEL AS FOLLOWS:
   - THE VERIZON FIBER CONDUIT HANDHOLES SHALL BE OLDCASTLE INFRASTRUCTURE MODEL 24361480 PC2436-30 T22 – VERIZON LOGO OR QUAZITE|HUBBELL POWER SYSTEMS MODEL PG2436Z1857B4 ASSY T22 SW OB 24x36x30 VERIZON V, OR APPROVED EQUALS. ALTERNATIVE HANDHOLES MAY BE USED IF MEETING THE DESIGNATED LOADING AND HAVING DIMENSIONS OF AT LEAST 2'x3'x2.5'. ALL VERIZON HANDHOLES TO HAVE "VERIZON" LOGO ON COVER.
   - THE GENERAL USE FIBER CONDUIT HANDHOLE SHALL BE A MODEL AS APPROVED BY THE CONSTRUCTION MANAGER.
2. CONTRACTOR SHALL PLACE ADDITIONAL HANDHOLES ALONG ROUTE, AS NECESSARY, SO THAT SPACING BETWEEN HANDHOLES IS NO GREATER THAN 500 FEET.
3. CONTRACTOR SHALL PLACE (1) COPPERHEAD INDUSTRIES ORANGE TRACER WIRE (PART NO. 1230N-HS) OR APPROVED EQUIVALENT ABOVE PROPOSED FIBER CONDUIT(S)
4. (2) 1-1/4" PVC FIBER CONDUITS w/PULLTAPES AND TRACER WIRE SHALL BE INSTALLED FROM H-FRAME HOFFMAN BOX TO VERIZON WIRELESS EQUIPMENT PAD LOCATION (PER PLANS)
5. IF WET GROUND CONDITIONS ARE ENCOUNTERED ONE 4" SCH40 PVC FIBER CONDUIT w/(3) 1" HDPE SMOOTH WALL INNERDUCTS AND PULLTAPES MAY BE INSTALLED FROM HANDHOLE OUTSIDE COMPOUND MEET POINT AT THE PUBLIC RIGHT-OF-WAY WITHIN UTILITY EASEMENT WITH PULL TAPE.

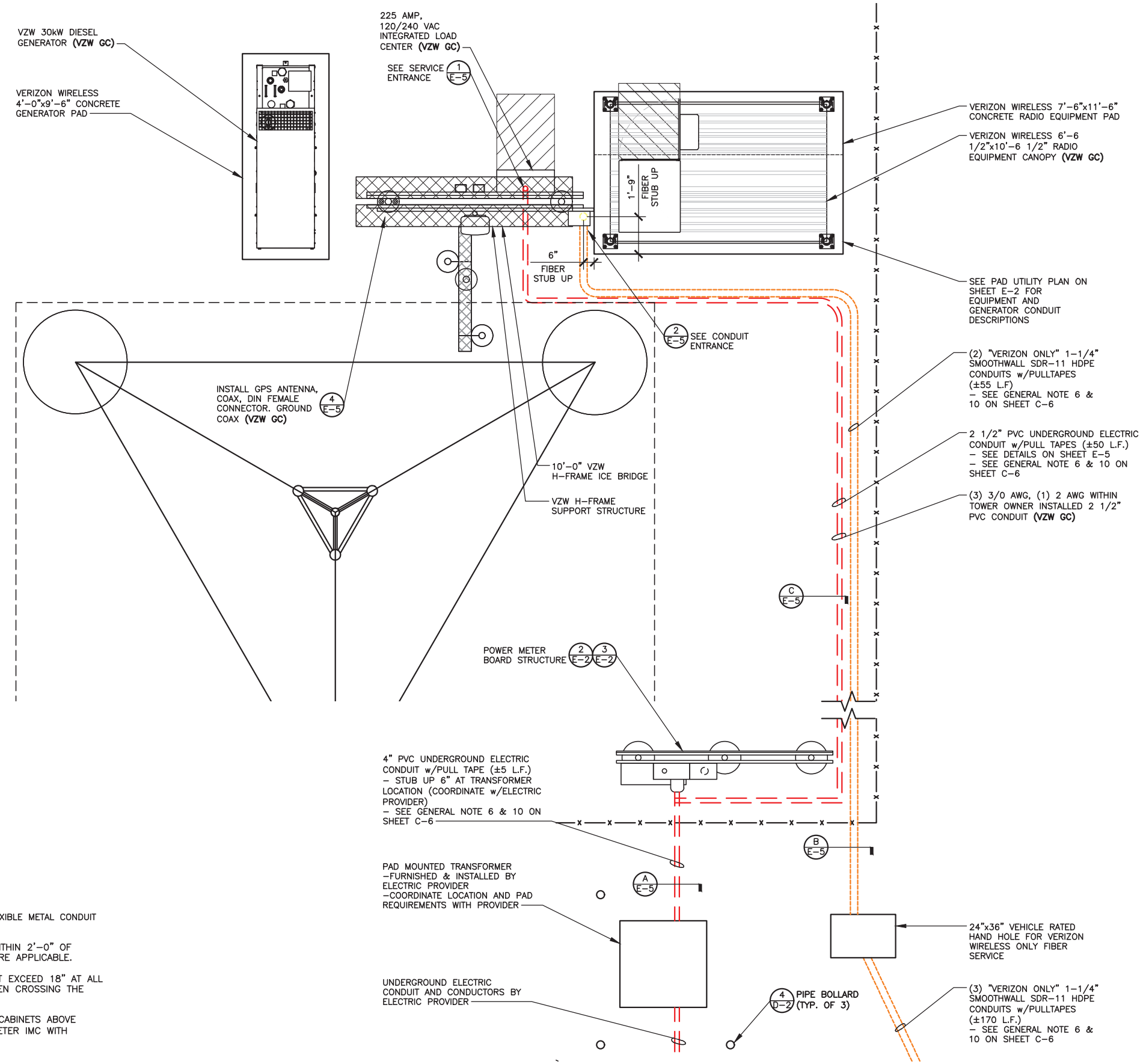

ELECTRICAL NOTES:

1. PROVIDE 6'-0" MAX. LIQUIDTIGHT FLEXIBLE METAL CONDUIT AT ALL EQUIPMENT CONNECTIONS.
2. ALL CONDUIT SHALL BE ROUTED WITHIN 2'-0" OF PERIMETER COMPOUND FENCE WHERE APPLICABLE.
3. CONDUIT TRENCH WIDTH SHALL NOT EXCEED 18" AT ALL ACCESS DRIVE LOCATIONS AND WHEN CROSSING THE COMPOUND GATE OPENING.
4. ALL CONDUIT RACEWAYS BETWEEN CABINETS ABOVE CONCRETE PAD SHALL BE 2" DIAMETER IMC WITH WEATHERPROOF FITTINGS.

Kentucky 811
Know what's below. Call before you dig.
Call Monday thru Friday – 7 am. to 6 pm.
1-800-752-6007
PER KENTUCKY STATE LAW, IT IS AGAINST THE LAW TO EXCAVATE WITHOUT NOTIFYING THE UNDERGROUND LOCATION SERVICE TWO (2) WORKING DAYS BEFORE COMMENCING WORK.

SITE UTILITY PLAN

SCALE: N.T.S.

TOWERCOM
241 ATLANTIC BLVD, STE 201
NEPTUNE BEACH, FL 32266

LAB
49030 Pontiac Trail, Suite 100
Wixom, Michigan 48393
PHONE: (248) 705-9212

REV.	DATE	DESCRIPTION
A	08/09/23	ISSUED FOR REVIEW
B	08/21/23	REVISED CD
0	08/24/23	FINAL CD
1	01/25/24	REVISED FINAL CD
2	05/29/24	REVISED FINAL CD
3	02/20/25	REVISED FINAL CD

STATE OF KENTUCKY
DMITRIY V. ALBUL
25093
LICENSED PROFESSIONAL ENGINEER
02-21-25

SITE INFORMATION:
CK AGEE RIDGE
13401 N. HWY 127
ALBANY, KY 42602
CLINTON COUNTY

SITE NUMBER:
724991

SITE NAME:
CK AGEE RIDGE

PID NUMBER: 16933258
DRAWN BY: RC
CHECKED BY: PL
DATE: 08.09.23

SHEET TITLE:
SITE UTILITY PLAN

SHEET NUMBER:
E-1
MIK PAD & CANOPY REV 4.3.1 02/03/25

VERIZON PANEL "A" SCHEDULE

MAIN: 225/2 VOLTAGE: 120/240 PHASE: 1 WIRE: 3

TO AUTOMATIC TRANSFER SWITCH — 225A — S/G A B — S/N

DESCRIPTION	BRKR.	WATTS					WATTS	BRKR.	DESCRIPTION
RECTIFIER #1	30/2	1800 / 1800	1	3		2	4	1800 / 1800	30/2	RECTIFIER #2
RECTIFIER #3	30/2	1800 / 1800	5	7		6	8	1800 / 1800	30/2	RECTIFIER #4
RECTIFIER #5	30/2	1800 / 1800	9	11		10	12	1800 / 1800	30/2	RECTIFIER #6
RECTIFIER #7	30/2	1800 / 1800	13	15		14	16	1800 / 1800	30/2	RECTIFIER #8
SPACE			17			18				SPACE
SPACE			19			20				SPACE
SPACE			21			22				SPACE
SPACE			23			24				SPACE
SPACE			25			26				SPACE
SPACE			27			28				SPACE
SPACE			29			30				SPACE
GFCI RECEPTACLE (RF CABINET)	15/1	180	31			32				SPACE
GEN. BLOCK HEATER	20/1	1500	33			34	180	15/1	GFCI RECEPTACLE
CANOPY LIGHTS	15/1	126	35			36	250	20/1	GEN. BATTERY CHARGER

SURGE ARRESTOR

SURFACE MOUNTED NEMA 3R w/DOOR
22K AIC BREAKERS
(E.C. SHALL VERIFY AIC RATINGS W/LOCAL POWER CO.)

PANEL LOADING SUMMARY:

MAXIMUM LOADING ON 200A PANEL SHALL BE 160A CONTINUOUS. RECTIFIERS SHALL BE CONSIDERED A CONTINUOUS LOAD. MAXIMUM NUMBER OF RECTIFIERS SHALL NOT EXCEED 8. LOADING WILL VARY BASED ON QUANTITY OF RECTIFIERS/CABINETS AND WILL NOT BE DETERMINED UNTIL TIME OF BUILD BY VERIZON. VERIZON TO ENSURE THE MAXIMUM TOTAL PANEL LOAD DOES NOT EXCEED 160A CONTINUOUS LOAD. VERIZON SHALL ALSO VERIFY THAT THE GENERATORTOR IS CAPABLE OF TRANSFERING THE ENTIRE PLANNED LOAD. VERIZON SHALL LOAD SHED AS REQUIRED IN ORDER TO ENSURE GENERATOR RATING IS NOT EXCEEDED.

PANEL SCHEDULE "A"

SCALE: N.T.S.

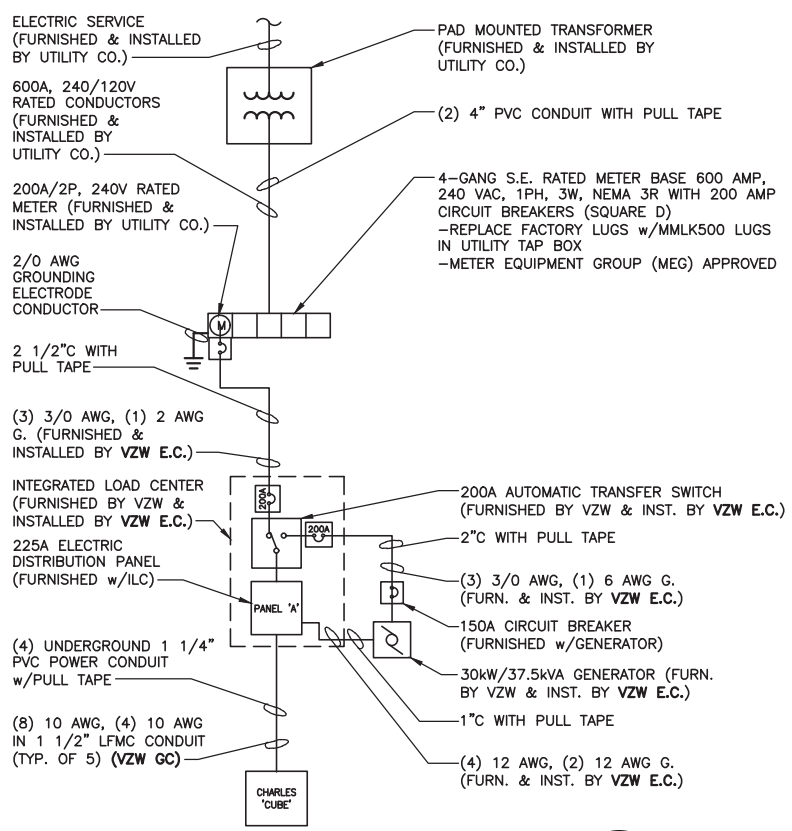

ONE LINE DIAGRAM

1 / E-2

SCALE: N.T.S.

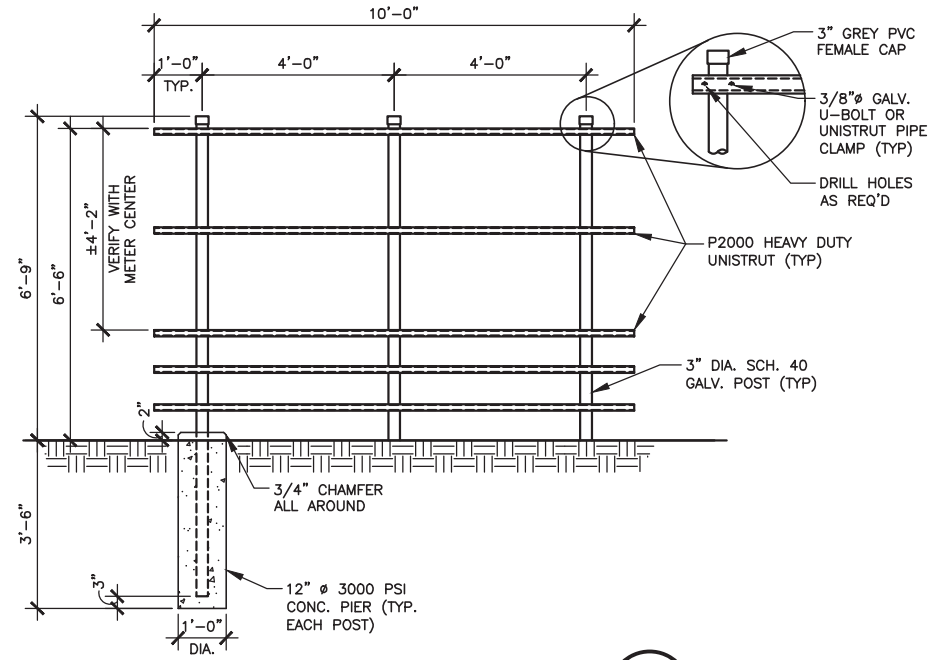

METER BOARD STRUCTURE

2 / E-2

SCALE: 1/4" = 1'-0"

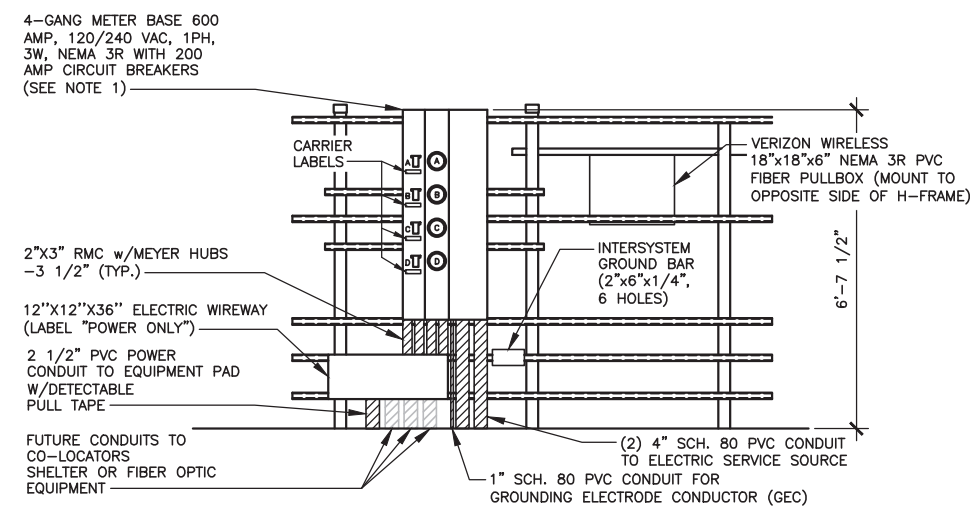

METER BOARD STRUCTURE-ELECTRIC SIDE

3 / E-2

SCALE: 1/4" = 1'-0"

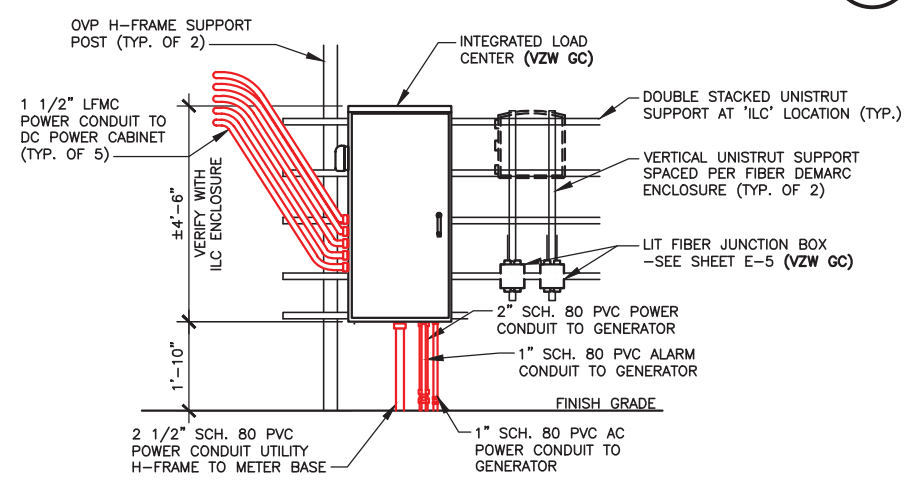

VZW ILC MOUNTING DETAIL

4 / E-2

SCALE: 1/4" = 1'-0"

GENERAL ELECTRICAL NOTES

1. UNLESS NOTED AS VERIZON WIRELESS GENERAL CONTRACTOR OR VZW GC, ALL WORK ITEMS ON ELECTRICAL "E" & GROUNDING "G" SHEETS SHALL BE PERFORMED BY THE GENERAL CONTRACTOR'S ELECTRICAL CONTRACTOR. ALL WORK SHOWN AS NEW UNLESS NOTED EXISTING.
2. THE GENERAL CONTRACTOR AND VERIZON WIRELESS ELECTRICAL CONTRACTORS SHALL BE LICENSED TO PERFORM WORK IN THE COUNTY OF THIS PROJECT AND SHALL BE RESPONSIBLE FOR OBTAINING AN ELECTRICAL PERMIT FROM THE COUNTY.
3. UNDERGROUND CONDUIT SHALL BE SCH. 40 (SCH. 80 UNDER ROADWAY) PVC PLASTIC DUCT WITH ALL BENDS MINIMUM 24" RADIUS 90° SWEEP SCH. 80 UNLESS OTHERWISE NOTED ON DRAWINGS. ELECTRICAL AND FIBER UTILITY LATERAL CONDUITS SHALL BE MINIMUM 36" RADIUS 90° SWEEP SCH. 80. ALL PVC SCH80 PIPING AND FITTINGS SHALL USE BELL END WHERE FEASIBLE.
4. ABOVE GRADE RISER CONDUIT SHALL BE RIGID SCH. 80 PVC WITH MATCHING FITTINGS UNLESS NOTED OTHERWISE.
5. ALL CONDUITS SHALL BE PLACED WITH 200 LB POLYETHYLENE PULL TAPES. PULL TAPES SHALL BE SECURELY FASTENED AT EACH END OF CONDUIT. (THIS SHALL ALSO APPLY FOR ALL FIBER CONDUITS).
6. PRIOR TO TRENCHING AND FOR COORDINATING OF THE FIBER AND ELECTRICAL SERVICES, SEE SHEET C-6 GENERAL NOTE #6 FOR UTILITY CONTACT NAMES & PHONE NUMBERS TO ALSO INCLUDE VERIZON WIRELESS CONSTRUCTION MANAGER.
7. ALL WORK SHALL BE IN ACCORDANCE WITH N.F.P.A. AND N.E.C. CODES, NEMA STANDARDS AND ALL LOCAL CODES.
8. ALL WIRE SHALL BE COPPER, 600V THHN-2/THWN-2 OR XHHW-2 90°C UNLESS NOTED OTHERWISE.
9. ALL ELECTRICAL CONTRACTORS SHALL ABIDE BY ALL GUIDELINES REQUIRED BY TOWER OWNER AND VERIZON WIRELESS, INCLUDING BUT NOT LIMITED TO, a) STAGE CONSTRUCTION AND REPORT WHEN ON AND OFF THE SITE. b) PROVIDE LOG BOOK RECORDS OF PERSONNEL ON TOWER. c) PROVIDE R.F. MONITORING DEVICES TO TOWER PERSONNEL. d) VERIZON WIRELESS TO INSPECT ALL TRENCHING BEFORE BACKFILLING.
10. THE ELECTRICAL CONTRACTOR SHALL INSTALL ALL UNDERGROUND CONDUITS SHOWN ON PLANS UNLESS NOTED OTHERWISE. ALL UNDERGROUND CONDUIT SHALL BE STUBBED-UP AND CAPPED AT THE LOCATION INDICATED ON PLANS. VZW CONTRACTOR SHALL COMPLETE ALL CONDUIT TERMINATIONS TO VZW ENCLOSURES SHOWN ON PLANS AND ELECTRICAL PROVIDER DESIGN .
11. THE VZW ELECTRICAL CONTRACTOR SHALL VERIFY ELECTRICAL SERVICE REQUIRED – 120/240V, SINGLE PHASE, 200 AMP BEFORE ROUGH IN.
12. GENERAL CONTRACTOR AND VZW ELECTRICAL CONTRACTORS SHALL PROVIDE FIRE WATCH DURING ALL WELDING OPERATIONS. TWO (2) HAND HELD 30 LB. FIRE EXTINGUISHERS & ADEQUATE WATER SUPPLY SHALL BE APPROVED BY THE CLIENT AND THE TOWNSHIP WATER AUTHORITY.
13. SEAL ALL PENETRATIONS WITH SILICONE SEALANT.
14. ELECTRICAL WORK PRESENTS SPECIFIC THREATS TO THE HEALTH AND SAFETY OF WORKERS ON SITE. SPECIFICALLY ELECTROCUTIONS ARE THE FOURTH LEADING CAUSE OF DEATH ON CONSTRUCTION SITES. ALL ELECTRICAL WORKERS SHALL HAVE CURRENT CERTIFICATIONS WHICH SATISFY ALL TRAINING REQUIREMENTS FOR THE ELECTRICAL WORK THEY ARE PERFORMING PER OSHA STANDARDS. ALL ELECTRICAL WORKERS SHALL ADHERE TO ALL SAFETY RULES AND REGULATIONS FOR WORKER AND PUBLIC SAFETY. ALL WORK SHALL BE PERFORMED BY QUALIFIED ELECTRICIANS TRAINED FOR THE TYPE OF WORK AND THE VOLTAGES PRESENT FOR EACH TASK. THE CONTRACTOR SHALL REVIEW ALL LANDOWNER, PRIME CONTRACTOR, CARRIER, OSHA, NFPA 70E, AND LOCAL SAFETY GUIDELINES AND AT ALL TIMES SHALL CONFORM TO THE MOST RESTRICTIVE OF THESE STANDARDS TO ENSURE A SAFE WORKPLACE.
15. CONNECT NEUTRAL TERMINAL IN SERVICE DISCONNECTING DEVICE TO GROUNDING ELECTRODE. (2/0 AWG TINNED STRANDED COPPER GROUNDING ELECTRODE CONDUCTOR IN 1" PVC CONDUIT). CONNECT FIRST GROUNDING ELECTRODE TO SECOND GROUNDING ELECTRODE WITH 2/0 AWG TINNED STRANDED COPPER CONDUCTOR EXOTHERMICALLY WELDED TO ELECTRODES.
16. VZW E.C. SHALL VERIFY SUFFICIENT CAPACITY EXISTS AT EXISTING METER CENTER. NOTIFY ENGINEER IMMEDIATELY IF SERVICE IS NOT ADEQUATE.
17. REFER TO ELECTRICAL SITE PLAN FOR CONDUIT AND WIRE EQUIREMENTS.
18. ALL ELECTRICAL EQUIPMENT PLACARDS MUST BE ENGRAVED PLASTIC LABELS ONLY, NO P-TOUCH LABELS ARE TO BE USED. PLACARDS SHALL BE 1 1/2" × 5" IN SIZE AND PERMANENTLY AFFIXED TO THE ENCLOSURES EASILY VISIBLE LOCATIONS.
19. VERIZON WIRELESS ELECTRICAL PLACARD REQUIREMENTS:
    a) AVAILABLE FAULT CURRENT RATING FROM UTILITY PROVIDER WITH DATE.
    b) VERIZON WIRELESS SERVICE DISCONNECT AT METER BASE.
    c) VERIZON MAIN BREAKER AT INTEGRATED LOAD CENTER 'ILC'.
    d) GENERATOR NEUTRAL CONDUCTOR BONDED TO SERVICE GROUNDING ELECTRODE IN THIS ENCLOSURE AT METER CENTER AND AUTOMATIC TRANSFER SWITCH "ATS" NEUTRAL BAR.
    e) VERIZON WIRELESS GENERATOR
    f) 'ACCESS PROPERTY OF VERIZON WIRELESS' AT ALL VERIZON WIRELESS FIBER HAND HOLES FASTENED TO INSIDE WALL OF HAND HOLE.
20. ALL EQUIPMENT SHALL BE GROUNDED PER LATEST EDITION OF NEC AND AS INDICATED ON GROUNDING PLAN.
21. ELECTRICAL EQUIPMENT SHALL BE MIN 3'-0" FROM ANY STRUCTURE AND AS REQUIRED BY LOCAL UTILITY COMPANIES.
22. 2 AWG BARE SOLID TINNED COPPER WIRE LEADS FROM NEW H-FRAME STRUCTURE TO BE BONDED TO EXISTING GROUNDING SYSTEM (TYP)
23. ALL METALLIC CABINETS & ENCLOSURES MUST BE GROUNDED WITH 2 AWG TO GROUND RING.
24. ALL ABOVE GRADE GROUND VZW CONNECTIONS SHALL BE IN 1/2" FLEXIBLE PVC CONDUIT w/ANTI-THEFT COMPOUND. ALL OTHER LEADS SHALL BE IN 1/2" PVC CONDUIT.
25. ALL HARDWARE USED MUST BE GALVANIZED OR STAINLESS STEEL, NO ZINC OR OTHER MATERIAL IS TO BE USED.
26. VERIZON WIRELESS FURNISH & INSTALL ALL INNER CONNECTING CONDUITS BETWEEN CABINETS AND LAND ALL AC POWER TO VZW EQUIPMENT.
27. ALL CONDUIT RUNS SHALL HAVE A CONTINUOUS SLOPE DOWNWARD AND AWAY FROM THE METERBOARD SO THAT WATER WILL NOT FLOW FROM THE EQUIPMENT. TRENCHES SHALL BE EXCAVATED ALONG STRAIGHT LINES BEFORE CONDUIT ARE INSTALLED SO THE ELEVATION CAN BE ADJUSTED, IF NECESSARY, TO AVOID UNSEEN OBSTACLES.
28. PRIOR TO THE SUBMISSION OF BIDS, THE GENERAL CONTRACTOR AND HIS SUBCONTRACTORS SHALL VERIFY ALL DETAILS AND SCHEDULES ON THE DRAWINGS AND SPECIFICATIONS PROVIDED BY THE OWNER, FOR MEANING OF ABBREVIATIONS AND ADDITIONAL REQUIREMENTS AND INFORMATION, CHECK STRUCTURAL AND OTHER MECHANICAL AND ELECTRICAL DRAWINGS FOR SCALE, SPACE LIMITATIONS, DOOR SWINGS, ADJACENT CARRIER EQUIPMENT COORDINATION AND ADDITIONAL INFORMATION, ETC. REPORT ANY DISCREPANCIES, CONFLICTS, ETC. TO THE OWNER BEFORE SUBMITTING BIDS.

TOWERCOM
241 ATLANTIC BLVD, STE 201
NEPTUNE BEACH, FL 32266

LAB
49030 Pontiac Trail, Suite 100
Wixom, Michigan 48393
PHONE: (248) 705-9212

REV.	DATE	DESCRIPTION
A	08/09/23	ISSUED FOR REVIEW
B	08/21/23	REVISED CD
0	08/24/23	FINAL CD
1	01/25/24	REVISED FINAL CD
2	05/29/24	REVISED FINAL CD
3	02/20/25	REVISED FINAL CD

STATE OF KENTUCKY
DMITRIY V. ALBUL
25093
LICENSED PROFESSIONAL ENGINEER
02-21-25

SITE INFORMATION:
CK AGEE RIDGE
13401 N. HWY 127
ALBANY, KY 42602
CLINTON COUNTY

SITE NUMBER: 724991

SITE NAME: CK AGEE RIDGE

PID NUMBER: 16933258

DRAWN BY: RC
CHECKED BY: PL
DATE: 08.09.23

SHEET TITLE:
PANEL SCHEDULE, ONE LINE DIAGRAM, ELECTRICAL NOTES AND DETAILS

SHEET NUMBER:
E-2

MIK PAD & CANOPY REV 4.3.1 02/03/25

NOTE:

ALL GENERATOR CONDUITS SHALL BE INSTALLED AND CAPPED WEATHERTIGHT FOR FUTURE GENERATOR INSTALLATION IF REQUIRED

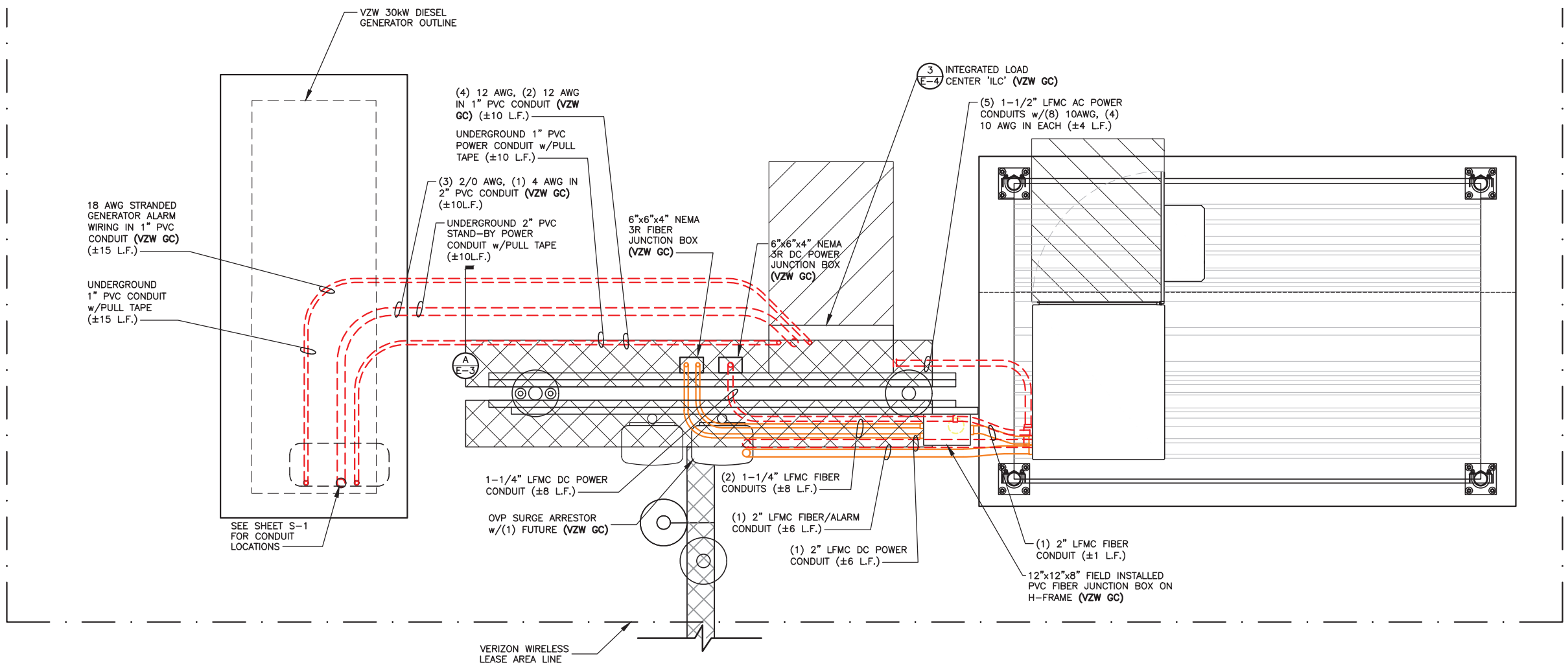

EQUIPMENT PAD UTILITY PLAN

SCALE: 3/8" = 1'-0"

NORTH

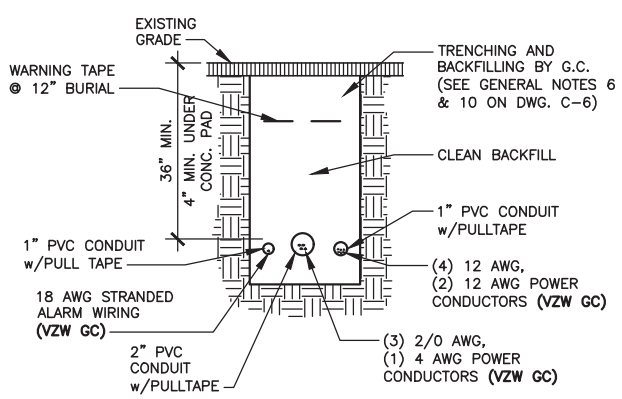

GENERATOR FEEDER TRENCH SECTION DETAIL

SCALE: N.T.S.

A E-3

ELECTRICAL NOTES:

1. EMERGENCY GENERATOR SHALL BE AS MANUFACTURED BY HOFFMAN ENCLOSURE (P/N A865JFGQRPWR) OR APPROVED EQUAL
2. GENERATOR EMERGENCY STOP SWITCH SHALL BE OF A SINGLE PUSH BUTTON OPERATING MODE USING A MAINTAINED PUSH/PULL ACTUATOR AS MANUFACTURED BY PILLA ELECTRICAL PRODUCTS (P/N GS120) OR APPROVED EQUAL.
3. CONTACT BLOCKS SHALL BE RATED AT CONTINUOUS CURRENT OF 10A @ 120 VAC
4. PROVIDE 6'-0" MAX. LIQUIDTIGHT FLEXIBLE METAL CONDUIT AT ALL EQUIPMENT AND GENERATOR CONNECTIONS.
5. ALL CONDUIT SHALL BE ROUTED WITHIN 2'-0" OF PERIMETER COMPOUND FENCE WHERE APPLICABLE.
6. CONDUIT TRENCH WIDTH SHALL NOT EXCEED 18" AT ALL ACCESS DRIVE LOCATIONS AND WHEN CROSSING THE COMPOUND GATE OPENING.
7. ALL CONDUIT RACEWAYS BETWEEN CABINETS CABINETS AND EQUIPMENT ABOVE CONCRETE PAD SHALL BE LFMC WITH DIAMETER AS NOTED ON PLAN WITH WEATHERPROOF FITTINGS.
8. ALL GENERATOR CONDUITS SHALL BE INSTALLED REGARDLESS OF INITIAL GENERATOR INSTALLATION.

TOWERCOM

241 ATLANTIC BLVD, STE 201
NEPTUNE BEACH, FL 32266

LAB

49030 Pontiac Trail, Suite 100
Wixom, Michigan 48393
PHONE: (248) 705-9212

REV.	DATE	DESCRIPTION
A	08/09/23	ISSUED FOR REVIEW
B	08/21/23	REVISED CD
0	08/24/23	FINAL CD
1	01/25/24	REVISED FINAL CD
2	05/29/24	REVISED FINAL CD
3	02/20/25	REVISED FINAL CD

STATE OF KENTUCKY
DMITRIY V. ALBUL
25093
LICENSED PROFESSIONAL ENGINEER

02-21-25

SITE INFORMATION:

CK AGEE RIDGE

13401 N. HWY 127
ALBANY, KY 42602
CLINTON COUNTY

SITE NUMBER:
724991

SITE NAME:
CK AGEE RIDGE

PID NUMBER: 16933258

DRAWN BY: RC
CHECKED BY: PL
DATE: 08.09.23

SHEET TITLE:
EQUIPMENT PAD UTILITY PLAN & EQUIPMENT PAD TRENCH SECTIONS

SHEET NUMBER:
E-3

MIK PAD & CANOPY REV 4.3.1 02/03/25

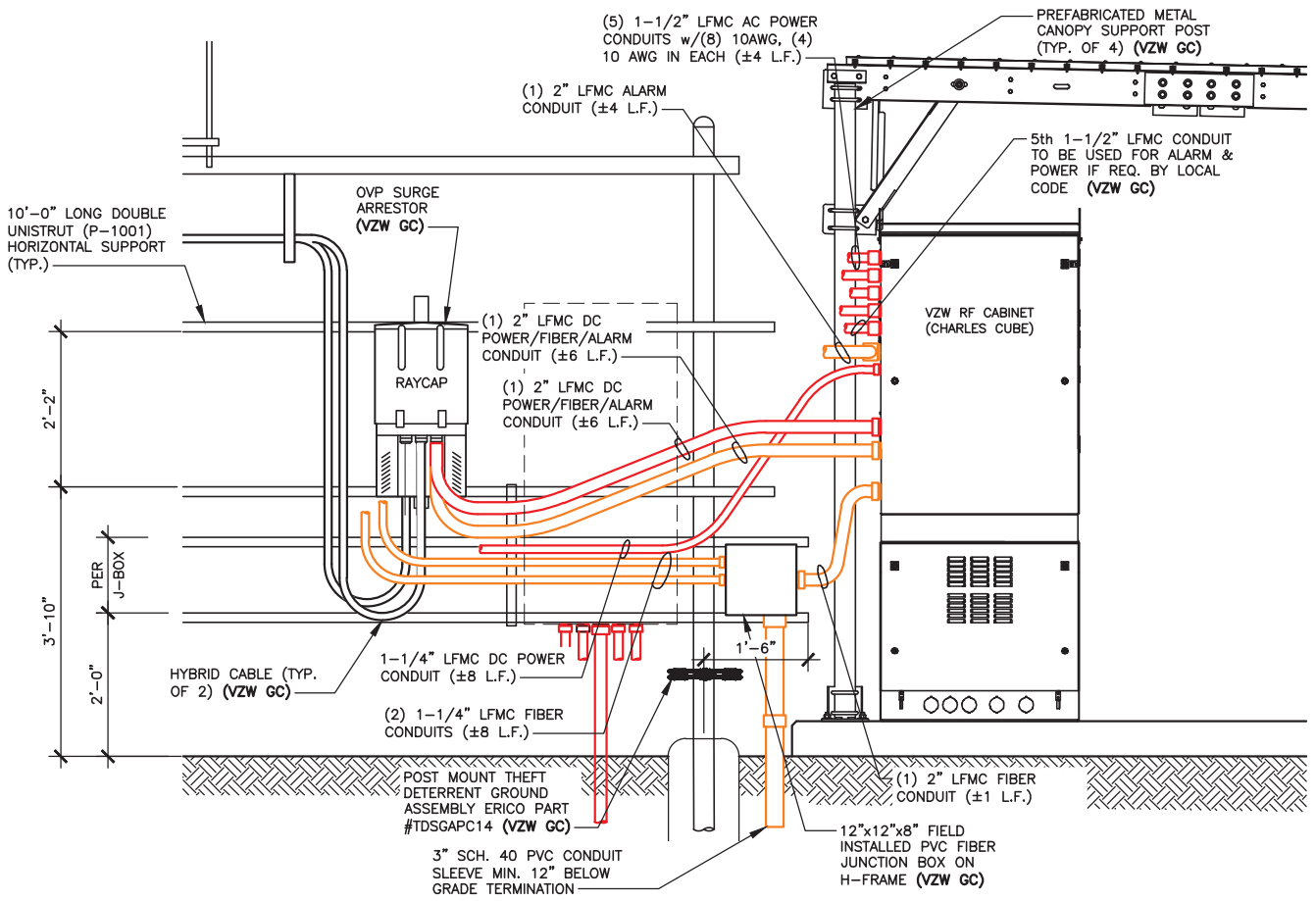

OUTDOOR OVP EQUIPMENT ELEVATION (OVP SIDE) – REAR (1 / E-4)

SCALE: 3/8" = 1'-0"

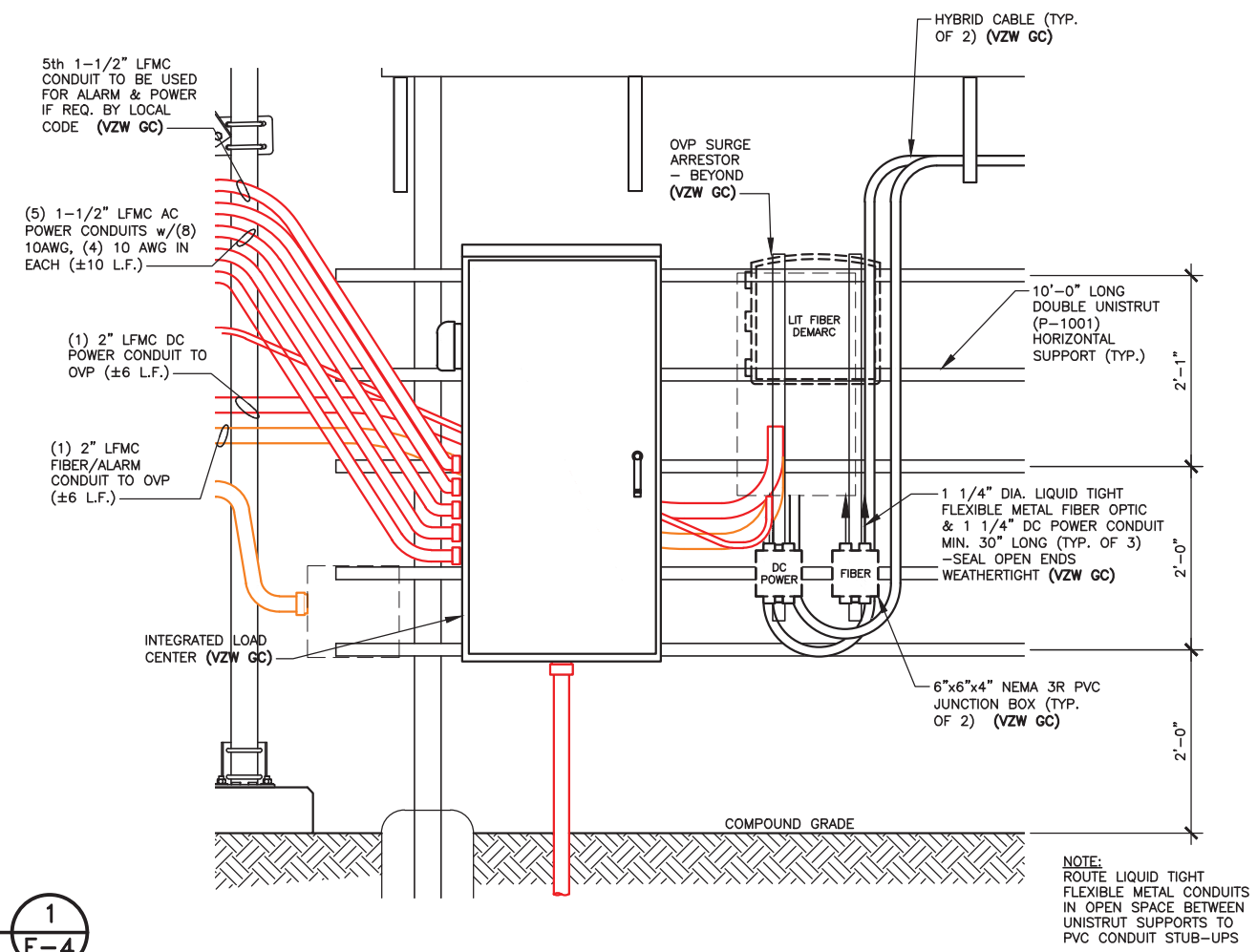

NOTE:
ROUTE LIQUID TIGHT FLEXIBLE METAL CONDUITS IN OPEN SPACE BETWEEN UNISTRUT SUPPORTS TO PVC CONDUIT STUB-UPS

ENLARGERD OVP H-FRAME ELEVATION (LIT FIBER DEMARC) (3 / E-4)

SCALE: 1/2" = 1'-0"

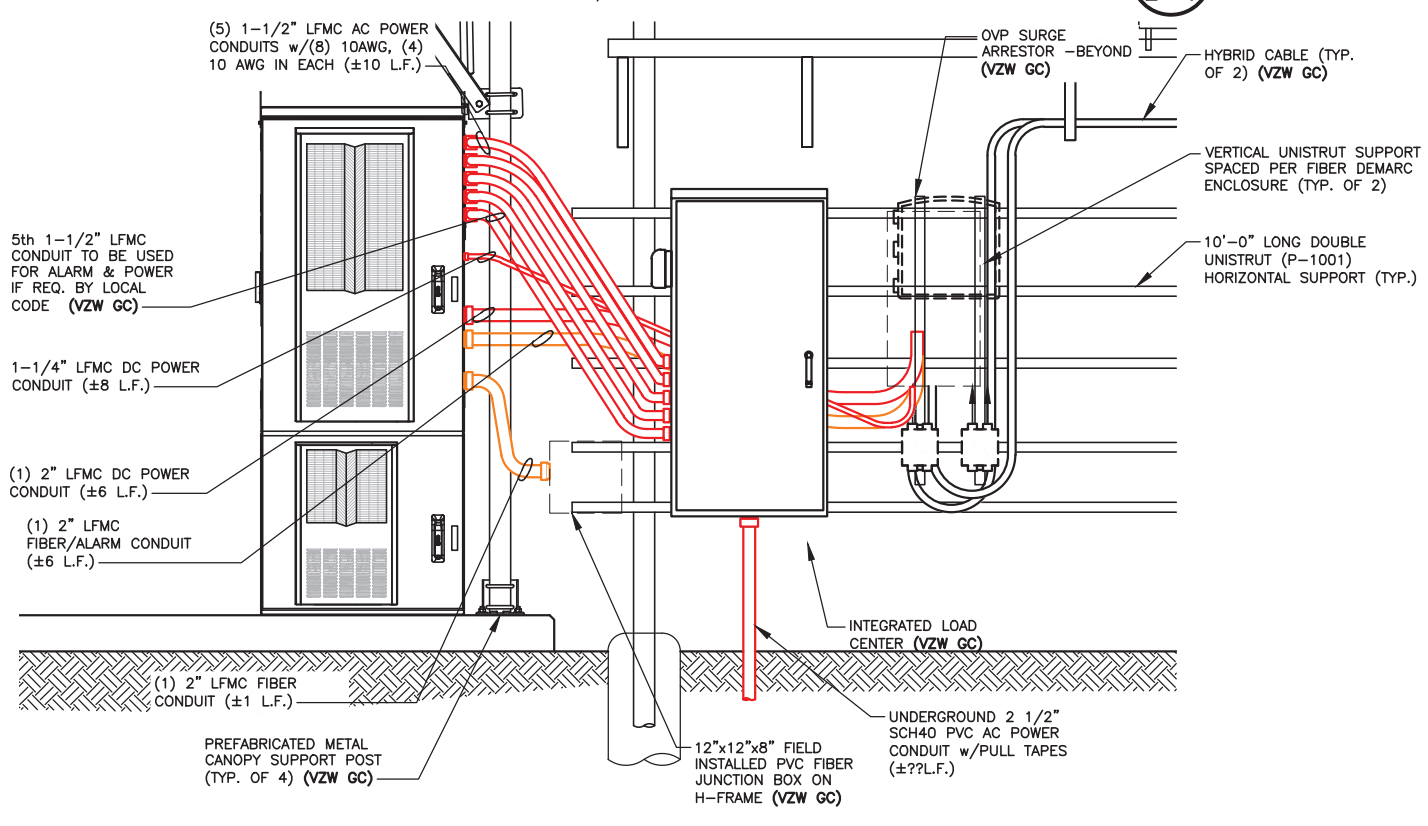

OUTDOOR OVP EQUIPMENT ELEVATION (ILC SIDE) – FRONT (2 / E-4)

SCALE: 3/8" = 1'-0"

TOWERCOM
241 ATLANTIC BLVD, STE 201
NEPTUNE BEACH, FL 32266

LAB
49030 Pontiac Trail, Suite 100
Wixom, Michigan 48393
PHONE: (248) 705-9212

REV.	DATE	DESCRIPTION
A	08/09/23	ISSUED FOR REVIEW
B	08/21/23	REVISED CD
0	08/24/23	FINAL CD
1	01/25/24	REVISED FINAL CD
2	05/29/24	REVISED FINAL CD
3	02/20/25	REVISED FINAL CD

STATE OF KENTUCKY
DMITRIY V. ALBUL
25093
LICENSED PROFESSIONAL ENGINEER
02-21-25

SITE INFORMATION:
CK AGEE RIDGE
13401 N. HWY 127
ALBANY, KY 42602
CLINTON COUNTY

SITE NUMBER:
724991

SITE NAME:
CK AGEE RIDGE

PID NUMBER: 16933258

DRAWN BY: RC
CHECKED BY: PL
DATE: 08.09.23

SHEET TITLE:
OVP & INTEGRATED LOAD CENTER H-FRAME ELEVATIONS AND DETAILS

SHEET NUMBER:
E-4

MIK PAD & CANOPY REV 4.3.1 02/03/25

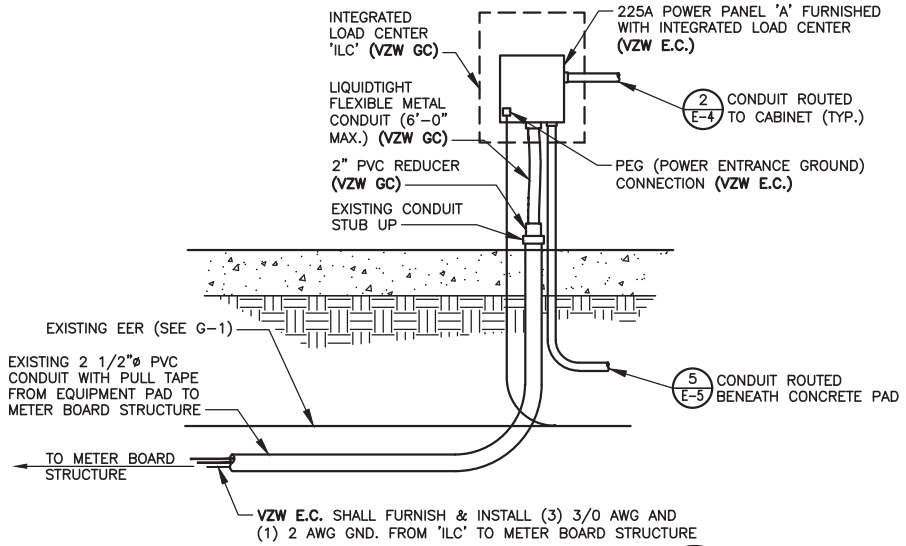

SERVICE ENTRANCE DETAIL (1 / E-5)

SCALE: N.T.S.

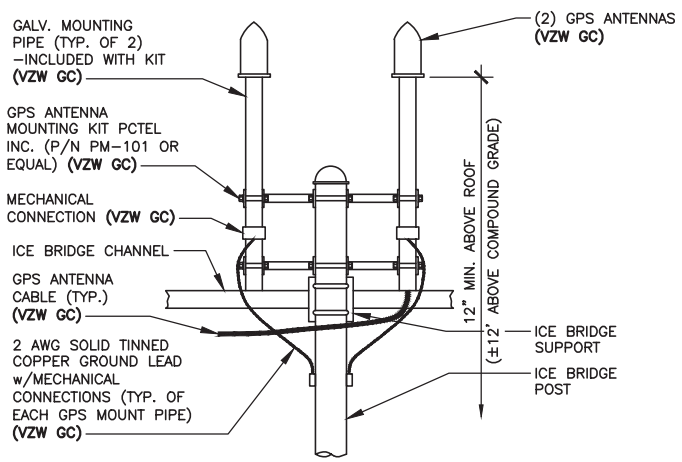

*ALL GPS ANTENNA INSTALLATION BY VZW GC

NOTE:

GPS ANTENNA MUST BE INSTALLED IN SUCH A MANNER AS TO PROVIDE A 360° CLEAR VIEW OF THE SKY AT ITS LOWEST MOUNTING POINT

GPS MOUNT DETAIL (4 / E-5)

SCALE: N.T.S.
(BY VZW GC)

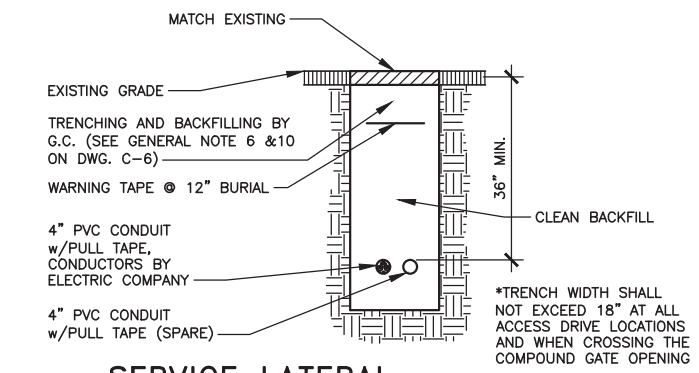

SERVICE LATERAL TRENCH SECTION DETAIL (A / E-5)

SCALE: N.T.S.

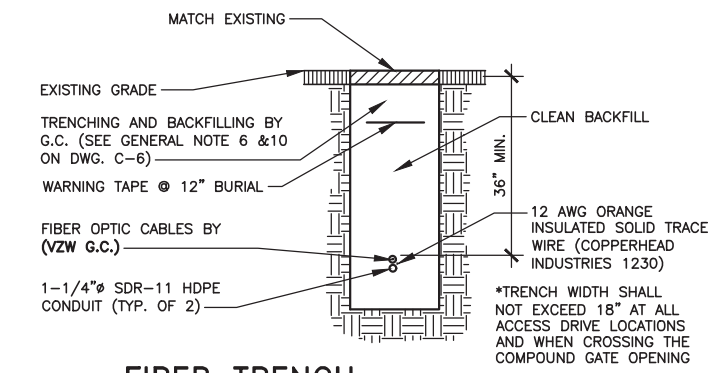

FIBER TRENCH SECTION DETAIL (B / E-5)

SCALE: N.T.S.

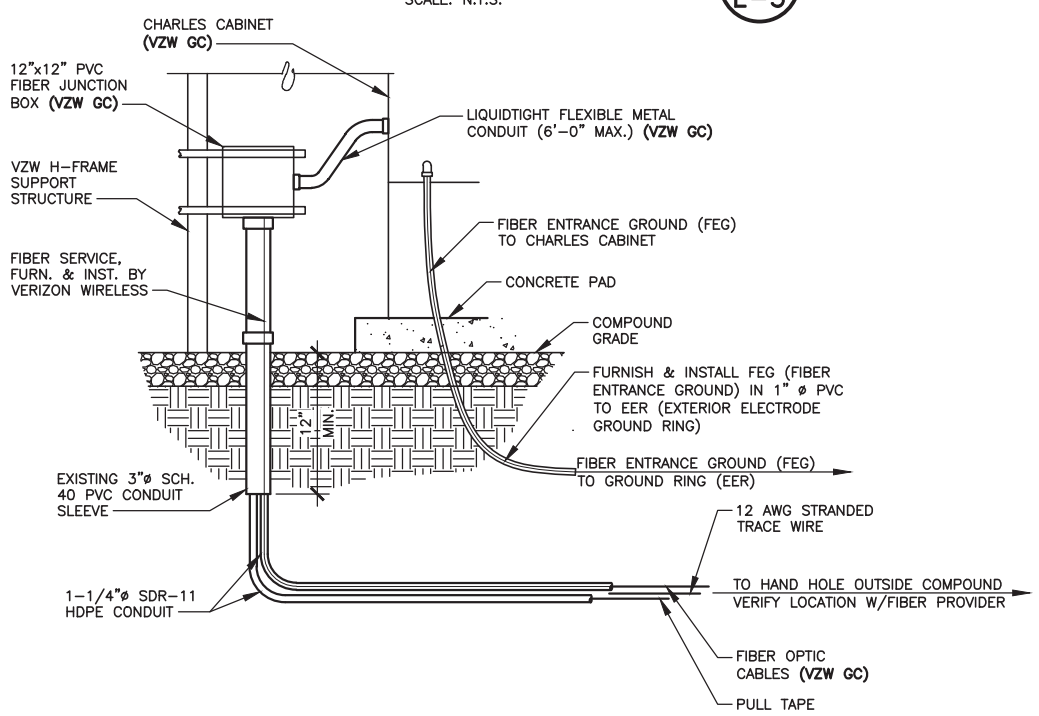

FIBER CONDUIT ENTRANCE DETAIL (2 / E-5)

SCALE: N.T.S.

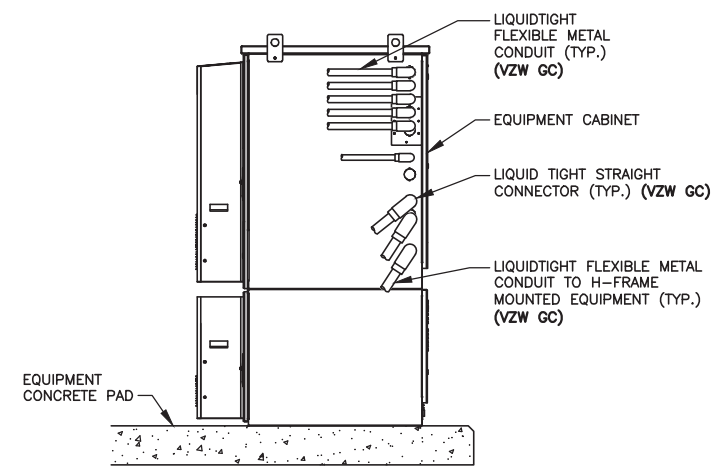

TYP. CABINET CONDUIT ENTRANCE DETAIL (5 / E-5)

SCALE: N.T.S.
(BY VZW GC)

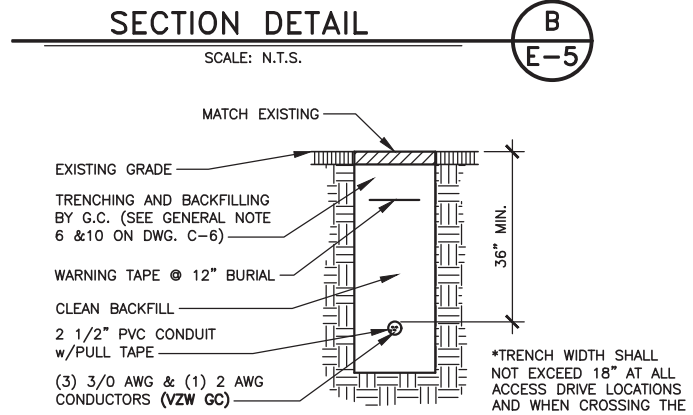

ELECTRIC FEEDER TRENCH SECTION DETAIL (C / E-5)

SCALE: N.T.S.

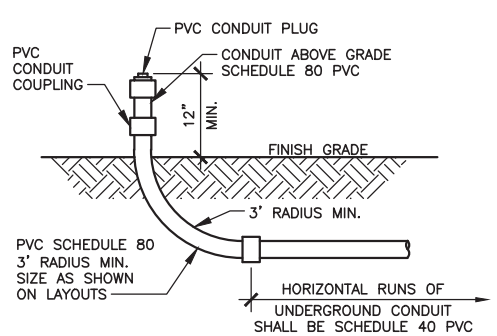

UNDERGROUND CONDUIT STUB-UP DETAIL (3 / E-5)

SCALE: N. T. S.

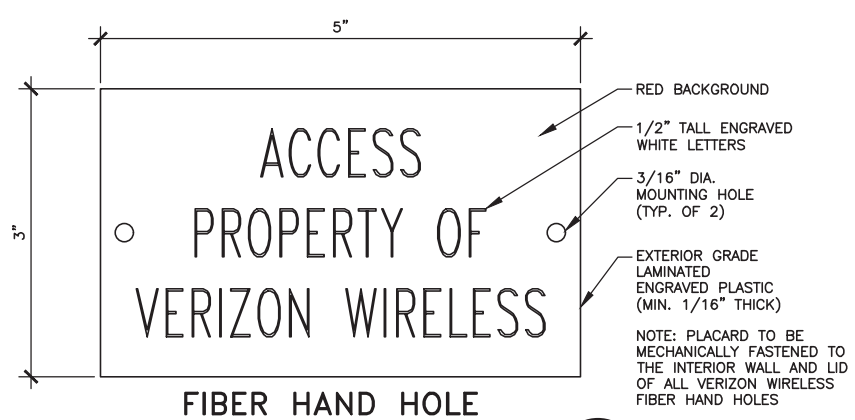

NOTE: PLACARD TO BE MECHANICALLY FASTENED TO THE INTERIOR WALL AND LID OF ALL VERIZON WIRELESS FIBER HAND HOLES

FIBER HAND HOLE PLACARD DETAIL (6 / E-5)

SCALE: N.T.S.

TOWERCOM
241 ATLANTIC BLVD, STE 201
NEPTUNE BEACH, FL 32266

LAB
49030 Pontiac Trail, Suite 100
Wixom, Michigan 48393
PHONE: (248) 705-9212

REV.	DATE	DESCRIPTION
A	08/09/23	ISSUED FOR REVIEW
B	08/21/23	REVISED CD
0	08/24/23	FINAL CD
1	01/25/24	REVISED FINAL CD
2	05/29/24	REVISED FINAL CD
3	02/20/25	REVISED FINAL CD

STATE OF KENTUCKY
DMITRIY V. ALBUL
25093
LICENSED PROFESSIONAL ENGINEER
02-21-25

SITE INFORMATION:

CK AGEE RIDGE

13401 N. HWY 127
ALBANY, KY 42602
CLINTON COUNTY

SITE NUMBER: 724991

SITE NAME: CK AGEE RIDGE

PID NUMBER: 16933258

DRAWN BY: RC
CHECKED BY: PL
DATE: 08.09.23

SHEET TITLE:

ELECTRICAL DETAILS

SHEET NUMBER:

E-5

MIK PAD & CANOPY REV 4.3.1 02/03/25

NOTE:

FIBER OPTIC INNERDUCTS SHALL TERMINATE INSIDE CHARLES CABINET ONLY

NOTE:

VERIFY INTERIOR EQUIPMENT LOCATION PRIOR TO JUNCTION BOX FASTENER INSTALLATION. NO SHARP FASTENER EDGES PERMITTED WITHIN CHARLES CABINET

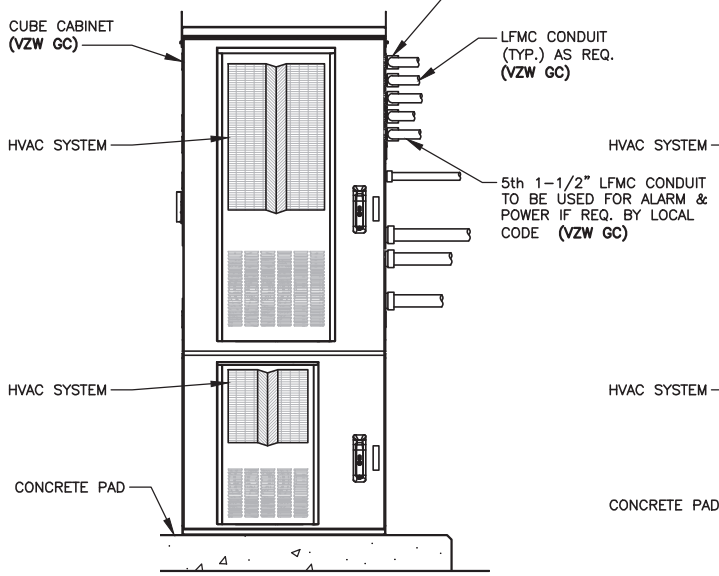

RF CABINET FRONT ELEVATION 1 E-6

SCALE: N.T.S.

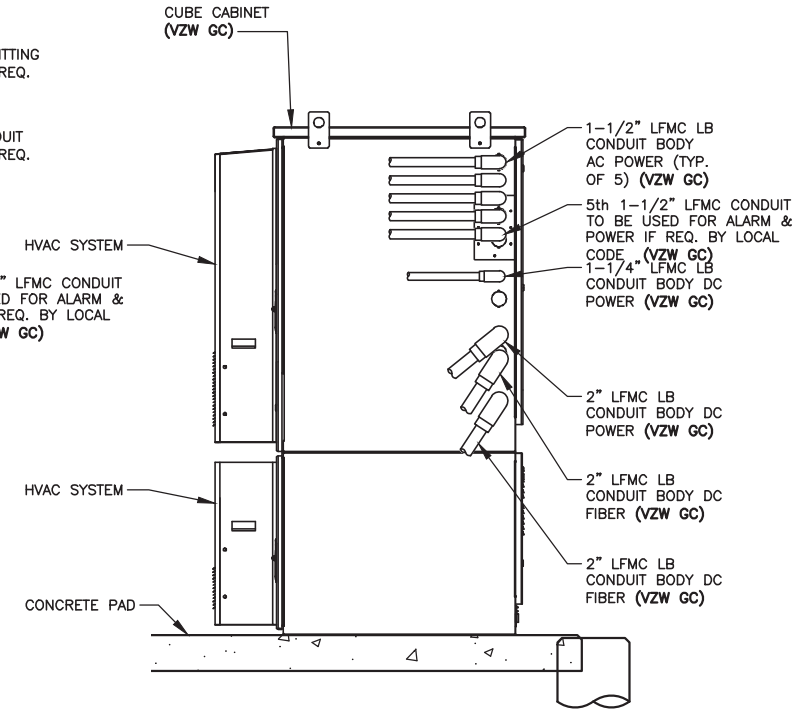

RF CABINET RIGHT ELEVATION 2 E-6

SCALE: N.T.S.

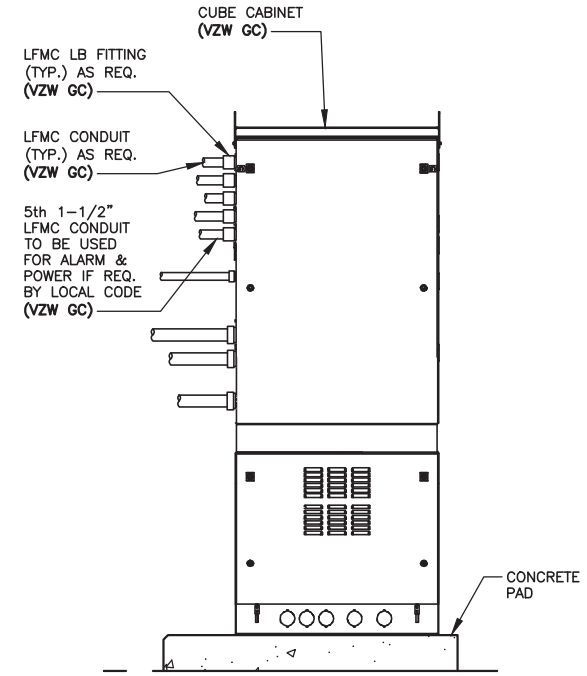

RF CABINET REAR ELEVATION 3 E-6

SCALE: N.T.S.

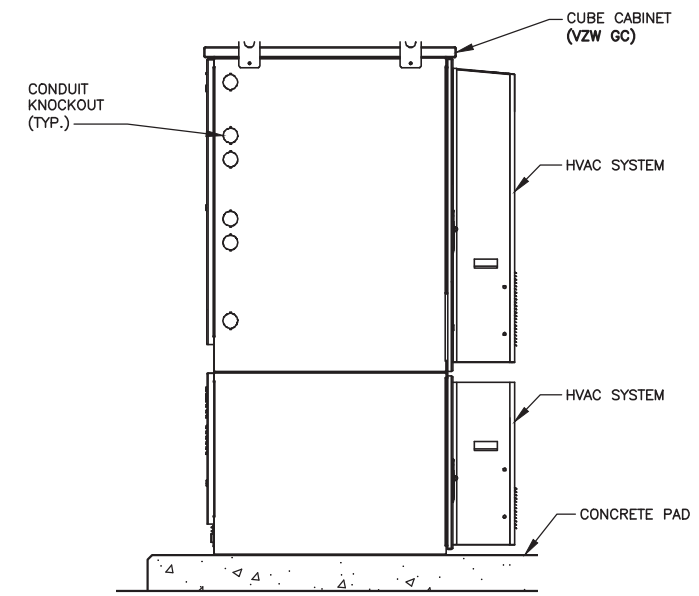

RF CABINET LEFT ELEVATION 4 E-6

SCALE: N.T.S.

TOWERCOM

241 ATLANTIC BLVD, STE 201
NEPTUNE BEACH, FL 32266

LAB

49030 Pontiac Trail, Suite 100
Wixom, Michigan 48393
PHONE: (248) 705-9212

REV.	DATE	DESCRIPTION
A	08/09/23	ISSUED FOR REVIEW
B	08/21/23	REVISED CD
0	08/24/23	FINAL CD
1	01/25/24	REVISED FINAL CD
2	05/29/24	REVISED FINAL CD
3	02/20/25	REVISED FINAL CD

STATE OF KENTUCKY
DMITRIY V. ALBUL
25093
LICENSED PROFESSIONAL ENGINEER

02-21-25

SITE INFORMATION:

CK AGEE RIDGE

13401 N. HWY 127
ALBANY, KY 42602
CLINTON COUNTY

SITE NUMBER:
724991

SITE NAME:
CK AGEE RIDGE

PID NUMBER: 16933258

DRAWN BY: RC
CHECKED BY: PL
DATE: 08.09.23

SHEET TITLE:

EQUIPMENT CABINET ELEVATIONS

SHEET NUMBER:

E-6

MIK PAD & CANOPY REV 4.3.1 02/03/25

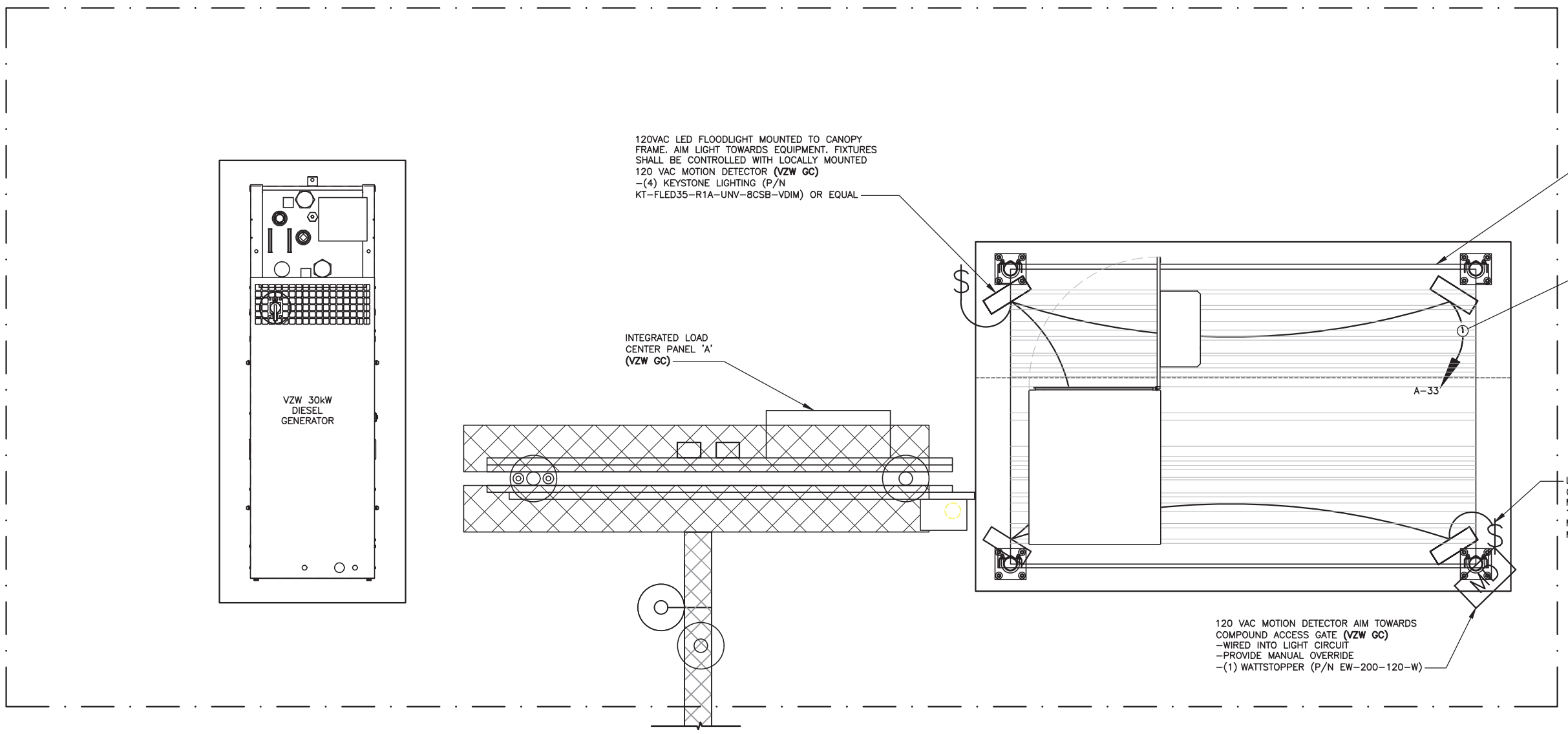

EQUIPMENT PAD LIGHTING PLAN

SCALE: N.T.S.

1 / E–7

NORTH

TOWERCOM

241 ATLANTIC BLVD, STE 201
NEPTUNE BEACH, FL 32266

LAB

49030 Pontiac Trail, Suite 100
Wixom, Michigan 48393
PHONE: (248) 705-9212

REV.	DATE	DESCRIPTION
A	08/09/23	ISSUED FOR REVIEW
B	08/21/23	REVISED CD
0	08/24/23	FINAL CD
1	01/25/24	REVISED FINAL CD
2	05/29/24	REVISED FINAL CD
3	02/20/25	REVISED FINAL CD

STATE OF KENTUCKY
DMITRIY V. ALBUL
25093
LICENSED PROFESSIONAL ENGINEER

02-21-25

SITE INFORMATION:

CK AGEE RIDGE

13401 N. HWY 127
ALBANY, KY 42602
CLINTON COUNTY

SITE NUMBER:
724991

SITE NAME:
CK AGEE RIDGE

PID NUMBER: 16933258

DRAWN BY: RC
CHECKED BY: PL
DATE: 08.09.23

SHEET TITLE:
EQUIPMENT PAD LIGHTING PLAN

SHEET NUMBER:
E–7

MIK PAD & CANOPY REV 4.3.1 02/03/25

Alarm wiring table

	RMX - 4000 Wiring Install on right side of panel when facing front of panel				Misc Wiring - left side of panel		
Alarm block Pos	Wire color	Alarm	RMX-4000	Wire Color	Wire Color	Alarm	Conn/Pos
1	White/Orange	Door Intrusion	1-4	White or Blue	Orange	Intrusion Alarm	
2	Orange				White Orange		
3	White/Green	Commercial Power Failure	1-4	White or Blue	N/A	N/A	
4	Green				N/A		
5	White/Blue	Surge Suppressor Lightning Arrestor	1-4	White or Blue	N/A	N/A	
6	Blue				N/A		
7	White/Brown	Rectifier Failure	1-4	White or Blue	Green/White	Rectifier Failure	J4 Pos 8
8	Brown				Red/Green		J4 Pos 18
9	White/Orange	Multiple Rectifier Failure	5-8	Red or Blue	White/Red	Multiple Rectifier Failure	J4 Pos 9
10	Orange				Red/White		J4 Pos 19
11	White/Green	Battery Discharge	5-8	Red or Blue	White	Battery Discharge	J4 Pos 4
12	Green				White/Black		J4 Pos 14
13	White/Blue	Low Voltage	5-8	Red or Blue	Black	Low Voltage	J4 Pos 5
14	Blue				Black/White		J4 Pos 15
15	White/Brown	DC Power Failure	5-8	Red or Blue	Blue/White	Fuse	J4 Pos 6
16	Brown				Red/Black	High Voltage	J4 Pos 20
17	White/Orange	Generator Running	9-12	Black or Blue	N/A	N/A	
18	Orange				N/A		
19	White/Green	Generator Low Fuel	9-12	Black or Blue	N/A	N/A	
20	Green				N/A		
21	White/Blue	Generator Failure	9-12	Black or Blue	N/A	N/A	
22	Blue				N/A		
23	White/Brown	HVAC Failure	9-12	Black or Blue	Black	HVAC Failure	
24	Brown				White/Blue		
25	White/Orange	High Temp	13-16	Yellow or Blue	Green	Overheat Alarm	
26	Orange				White/Green		
27	White/Green	Low Temp	13-16	Yellow or Blue	N/A	N/A	
28	Green				N/A		
29	White/Blue	Tower Light	13-16	Yellow or Blue	N/A	N/A	
30	Blue				N/A		
31	White/Brown	Tower Light Side	13-16	Yellow or Blue	N/A	N/A	
32	Brown				N/A		
33	White/Orange	RRH Upconverter Failure	17-20	Violet or Blue	White/Blue	RRH Upconverter Failure	
34	Orange				Blue		
35	White/Green	RRH Power Failure	17-20	Violet or Blue	N/A	N/A	
36	Green				N/A		
37	White/Blue	RRH High Humidity	17-20	Violet or Blue	N/A	N/A	
38	Blue				N/A		
39	White/Brown	RRH Intrusion	17-20	Violet or Blue	N/A	N/A	
40	Brown				N/A		
41	White/Orange	Smoke Fire	21-24	Blue	N/A	N/A	
42	Orange				N/A		
43	White/Green	Bus Bar Theft	21-24	Blue	N/A	N/A	
44	Green				N/A		
45	White/Blue	N/A	21-24	Blue	N/A	N/A	
46	Blue				N/A		
47	White/Brown	N/A	21-24	Blue	N/A	N/A	
48	Brown				N/A		
49	White/Orange	Microwave Critical	25-28	Orange or Blue	N/A	N/A	
50	Orange				N/A		
51	White/Green	Microwave Major	25-28	Orange or Blue	N/A	N/A	
52	Green				N/A		
53	White/Blue	Dehydrator Alarm	25-28	Orange or Blue	N/A	N/A	
54	Blue				N/A		
55	White/Brown	Fire Suppression Discharge	25-28	Orange or Blue	N/A	N/A	
56	Brown				N/A		
57	White/Orange	Fire Suppression Trouble	29-32	Green or Blue	N/A	N/A	
58	Orange				N/A		
59	White/Green	Secondary HVAC Running	29-32	Green or Blue	N/A	N/A	
60	Green				N/A		
61	White/Blue	Explosive gas	29-32	Green or Blue	N/A	N/A	
62	Blue				N/A		
63	White/Brown	High Humidity	29-32	Green or Blue	N/A	N/A	
64	Brown				N/A		
65-84	N/A	N/A	N/A	N/A	N/A	N/A	

ALARM WIRING TABLE (1 / E-8)

SCALE: N.T.S.

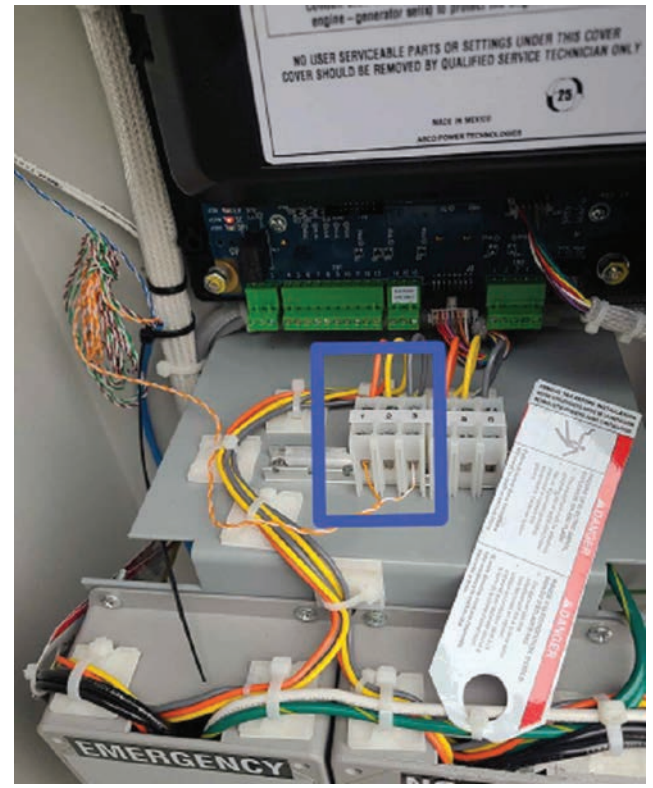

INTEGRATED LOAD CENTER "SURGE" DETAIL (2 / E-8)

SCALE: N.T.S.

INTEGRATED LOAD CENTER "COMMERCIAL POWER" DETAIL (3 / E-8)

SCALE: N.T.S.

CONTRACTOR SHALL COIL ALARMING CONDUCTORS AND PLACE ADJACENT TO ANNUNCIATOR PANEL

CONTRACTOR SHALL INDIVIDUALLY LABEL ALL ALARMING CONDUCTORS COORDINATED TO APPROPRIATE CONTACT POSITION

GENERATOR ANNUNCIATOR PANEL

GENERATOR ALARM PANEL DETAIL (4 / E-8)

SCALE: N.T.S.

TOWERCOM

241 ATLANTIC BLVD, STE 201
NEPTUNE BEACH, FL 32266

LAB

49030 Pontiac Trail, Suite 100
Wixom, Michigan 48393
PHONE: (248) 705-9212

REV.	DATE	DESCRIPTION
A	08/09/23	ISSUED FOR REVIEW
B	08/21/23	REVISED CD
0	08/24/23	FINAL CD
1	01/25/24	REVISED FINAL CD
2	05/29/24	REVISED FINAL CD
3	02/20/25	REVISED FINAL CD

STATE OF KENTUCKY
DMITRIY V. ALBUL
25093
LICENSED PROFESSIONAL ENGINEER

02-21-25

SITE INFORMATION:

CK AGEE RIDGE

13401 N. HWY 127
ALBANY, KY 42602
CLINTON COUNTY

SITE NUMBER: 724991

SITE NAME: CK AGEE RIDGE

PID NUMBER: 16933258

DRAWN BY: RC
CHECKED BY: PL
DATE: 08.09.23

SHEET TITLE:

ALARMING TABLE, DIAGRAMS AND DETAILS (REFERENCE ONLY)

SHEET NUMBER:

E-8

MIK PAD & CANOPY REV 4.3.1 02/03/25

Scope and test fibers.
Install fibers

Label each end of fibers per label template. Labels should be the same on each end of fiber. Labels should be installed 3-4 inches from end of fiber.

Route fibers out the backside of fiber tray. Separate fibers into Alpha, Beta, and Gamma. Route fibers out of fiber tray as shown.

Route fibers **UNDER** the 6630/6648 Shelf #1 to front side of the cabinet

Note: Only install/label Module #4 if fibers are provided.

Note: Only install Aqua fibers if instructed by a supervisor. Otherwise ship loose

Label Template

Updated template

4449 ALPHA	4449 BETA	4449 GAMMA	8843 ALPHA	8843 BETA	8843 GAMMA
6449 ALPHA LINK 1	6449 ALPHA LINK 2	6449 BETA LINK 1	6449 BETA LINK 2	6449 GAMMA LINK 1	6449 GAMMA LINK 2
4408 ALPHA	4408 BETA	4408 GAMMA			

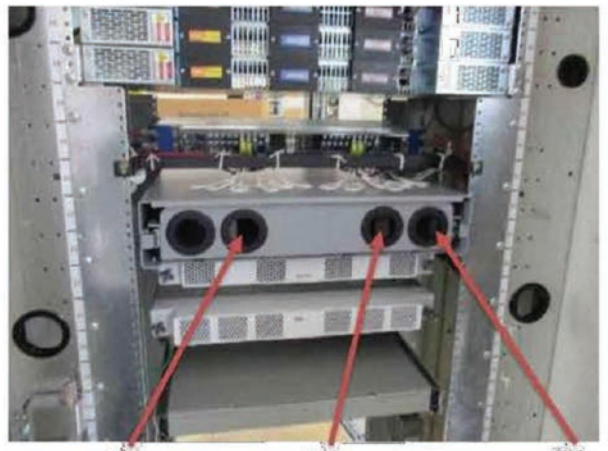

Aqua Fibers if installed- label each end the same
Fiber 1
Fiber 2
Fiber 3

FIBER ROUTING DETAIL (1 / E-10)
SCALE: N.T.S.

Alarm wiring for Cabinet

Remove old alarm block and install new panel DRP4722SW

Route wiring from RMX4000 to alarm panel. Wiring will be various colors or all blue as shown

If connector is connected to old alarm block, remove connector and wire to alarm panel

Note: See wiring table on next page

Place alarm block label template on door

Jumper Office Alarm cable wires. Connector J4 position 16 (Blue/Red) and position 10 (Black/red)

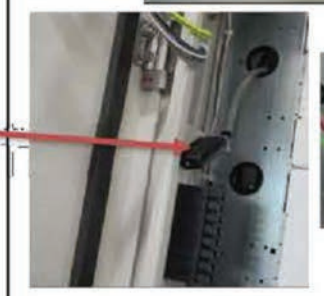

ALARM WIRING CONNECTIONS (2 / E-10)
SCALE: N.T.S.

TOWERCOM
241 ATLANTIC BLVD, STE 201
NEPTUNE BEACH, FL 32266

LAB
49030 Pontiac Trail, Suite 100
Wixom, Michigan 48393
PHONE: (248) 705-9212

REV.	DATE	DESCRIPTION
A	08/09/23	ISSUED FOR REVIEW
B	08/21/23	REVISED CD
0	08/24/23	FINAL CD
1	01/25/24	REVISED FINAL CD
2	05/29/24	REVISED FINAL CD
3	02/20/25	REVISED FINAL CD

STATE OF KENTUCKY
DMITRIY V. ALBUL
25093
LICENSED PROFESSIONAL ENGINEER
02-21-25

SITE INFORMATION:
CK AGEE RIDGE
13401 N. HWY 127
ALBANY, KY 42602
CLINTON COUNTY

SITE NUMBER: 724991

SITE NAME: CK AGEE RIDGE

PID NUMBER: 16933258
DRAWN BY: RC
CHECKED BY: PL
DATE: 08.09.23

SHEET TITLE:
ALARM AND FIBER CABLE ROUTING (REFERENCE ONLY)

SHEET NUMBER:
E-9

MIK PAD & CANOPY REV 4.3.1 02/03/25

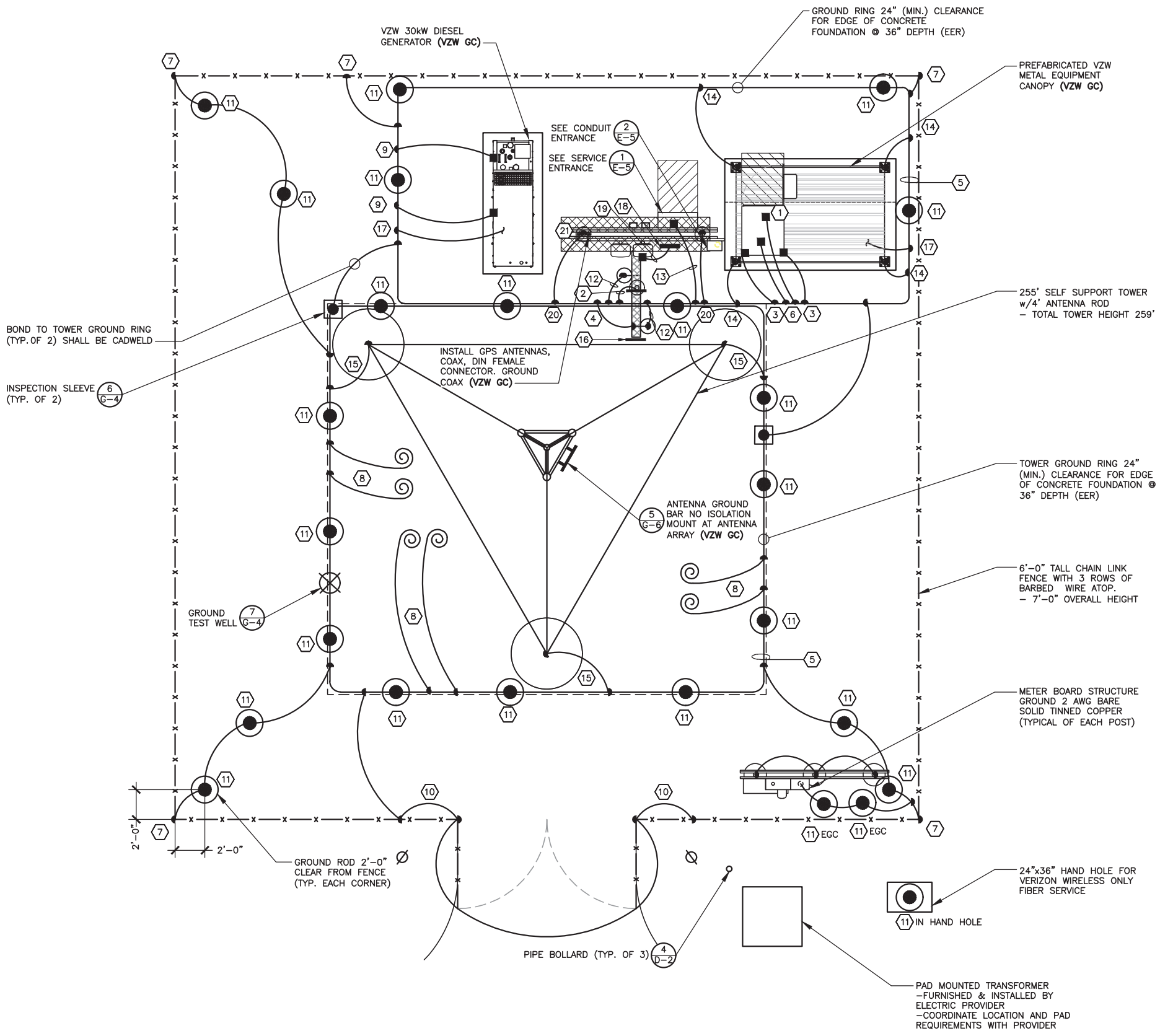

NOTES:
1. ALL ABOVE GRADE GROUND LEADS TO BE INSTALLED IN 1/2" NON-CONDUCTIVE FLEXIBLE PVC CONDUIT WITH ANTI-THEFT COMPOUND.
2. COORDINATE ICE BRIDGE POST GROUND LEAD INSTALLATION WITH ICE BRIDGE POST LOCATIONS ON SHEET S-1.
3. SEE SHEET G-2 FOR GROUNDING KEYED NOTES.

GROUNDING SITE PLAN

SCALE: N.T.S.

NORTH

TOWER GROUND RING NOTES:

1. GROUNDING PLAN SHOWN IS FOR A PAD AND PIER TOWER FOUNDATION. IF THE TOWER OWNER ELECTS TO INSTALL A CAISSON FOUNDATION THE TOWER GROUND RING (EER) WILL BE MODIFIED. THE TOWER GROUND RING (EER) SHALL BE INSTALLED PER VERIZON WIRELESS STANDARDS. 24" MIN. CLEARANCE FROM THE TOWER FOUNDATIONS AT 36" MIN. BELOW GRADE.
2. ALL GROUND RODS SHALL BE INSTALLED PER VERIZON WIRELESS STANDARDS.
3. ALL GROUND LEADS DEPICTED ON THIS PLAN SHALL BE MODIFIED TO CONNECT TO THE MODIFIED TOWER GROUND RING (EER) LOCATION.

TOWERCOM
241 ATLANTIC BLVD, STE 201
NEPTUNE BEACH, FL 32266

LAB
49030 Pontiac Trail, Suite 100
Wixom, Michigan 48393
PHONE: (248) 705-9212

REV.	DATE	DESCRIPTION
A	08/09/23	ISSUED FOR REVIEW
B	08/21/23	REVISED CD
0	08/24/23	FINAL CD
1	01/25/24	REVISED FINAL CD
2	05/29/24	REVISED FINAL CD
3	02/20/25	REVISED FINAL CD

STATE OF KENTUCKY
DMITRIY V. ALBUL
25093
LICENSED PROFESSIONAL ENGINEER
02-21-25

SITE INFORMATION:
CK AGEE RIDGE
13401 N. HWY 127
ALBANY, KY 42602
CLINTON COUNTY

SITE NUMBER:
724991

SITE NAME:
CK AGEE RIDGE

PID NUMBER: 16933258
DRAWN BY: RC
CHECKED BY: PL
DATE: 08.09.23

SHEET TITLE:
GROUNDING SITE PLAN

SHEET NUMBER:
G-1

MIK PAD & CANOPY REV 4.3.1 02/03/25

TOWER OWNER GROUNDING KEYED NOTES

1. BBG: FURN. & INST. 1 – 2/0 AWG INSULATED STRANDED COPPER GND. WIRE FOR BATTERY BAY GROUND (BBG) TO (EER). COIL UP 6' ABOVE GRADE. CONNECTION TO (EER) SHALL BE CADWELD.
2. CEPSG: FURN. & INST. 1 – 2 AWG BARE SOLID TINNED COPPER GND. WIRE FOR CEPSG POST TO (EER). CONNECTION (EER) SHALL BE CADWELD.
3. CG: FURN. & INST. 2 – 2 AWG BARE SOLID TINNED COPPER GND. WIRE FOR CABINET GROUND (CG) TO (EER). COIL UP 6' ABOVE GRADE. CONNECTION (EER) SHALL BE CADWELD.
4. CSG: FURN. & INST. 1 – 2 AWG BARE SOLID TINNED COPPER GND WIRE FOR ICE BRIDGE CHANNEL TO (EER). CONNECTION (EER) SHALL BE CADWELD.
5. EER: FURN. & INST. 2 AWG BARE SOLID TINNED COPPER BURIED EXTERIOR ELECTRODE GROUND RING (EER) AROUND RADIO EQUIPMENT PAD AND TOWER BURIED AT 36" OR 6" BELOW FROST LINE (WHICHEVER IS GREATER). MAINTAIN 24" FROM EQUIPMENT PAD AND TOWER FOUNDATIONS MINIMUM.
6. FEG: FURN. & INST. 1 – 2 AWG BARE SOLID TINNED COPPER GND. WIRE FOR FIBER ENTRANCE GROUND (FEG) TO (TGE). COIL UP 10' ABOVE GRADE. CONNECTION TO (EER) SHALL BE CADWELD.
7. FG: FURN. & INST. 1 – 2 AWG BARE SOLID TINNED COPPER GND WIRE FROM NEW FENCING TO GROUND RING (EER). CONNECTION TO FENCING SHALL BE AT THE BASE OF FENCE POST USING CADWELD AND WEAVE GND. WIRE THRU FABRIC AND ATTACH TO TOP RAIL WITH CADWELD. CONNECTION TO (EER) SHALL BE CADWELD.
8. FTWGL: FURN. & INST. FUTURE TOWER WAVEGUIDE GROUND BAR LEADS. CONTRACTOR SHALL COIL UP TEN (10') OF 2 AWG SOLID TINNED COPPER GROUND (TYP.)
9. GEG: FURN. & INST. 1 – 2 AWG BARE SOLID TINNED COPPER GND. WIRE FOR THE GENERATOR ENCLOSURE TO (EER). COIL UP 6' ABOVE GRADE. CONNECTION (EER) SHALL BE CADWELD. *GENERATOR SERVICE GROUND WHERE REQUIRED BY JURISDICTION HAVING AUTHORITY
10. GG: FURN. & INST. 1 – 2 AWG BARE SOLID TINNED COPPER GND WIRE AT EACH GATE POST AND PROVIDE GROUND WIRE TO BONDING JUMPER FROM GATE POST TO FENCE POST.
11. GRE: FURN. & INST. GROUND RODS TO 36" BELOW FINISH GRADE (OR 6" BELOW FROST LINE, WHICHEVER IS GREATER) AT A MINIMUM SPACING OF 10'–0" AT RADIO EQUIPMENT PAD, TOWER AND SITE EXTERIOR GROUND SYSTEM. CONNECTION TO (EER) SHALL BE CADWELD. REFER TO DETAIL 5 ON SHEET G–4.
12. IBSG: FURN. & INST. 1 – 2 AWG BARE SOLID TINNED COPPER GND. WIRE FROM ICE BRIDGE SUPPORT POST TO (EER). CONNECTION (EER) SHALL BE CADWELD. SEE SHEET S–1 FOR ICE BRIDGE POST LOCATIONS.
13. PEG: FURN. & INST. 1 – 2 AWG BARE SOLID TINNED COPPER GND. WIRE FOR THE 'ILC' GROUND BAR TO (EER). COIL UP 6' ABOVE GRADE. CONNECTION (EER) SHALL BE CADWELD.
14. PCSG: FURN. & INST. 1 – 2 AWG BARE SOLID TINNED COPPER GND. WIRE FOR EACH PAD CANOPY SUPPORT BASE TO (EER). COIL UP 6' ABOVE GRADE. CONNECTION TO (EER) SHALL BE CADWELD.
15. TBG: FURN. & INST. 1– 2 AWG BARE SOLID TINNED COPPER GND. WIRE FROM TOWER LEG BASE PLATE TO (EER). CONNECTION TO TOWER LEG BASE PLATE SHALL BE CADWELD OR MECHANICAL TO LEG AND (EER) SHALL BE CADWELD.
16. TWG: **BY VZW E.C.**
17. UG: FURN. & INST. 1 – 2 AWG BARE SOLID TINNED COPPER GND. WIRE (UFER GROUND) FOR PAD FOUNDATION REINFORCEMENT STEEL CONNECTION TO (EER) SHALL BE CADWELD. PROVIDE HEAT SHRINK TUBING OR ELECTRICAL TAPE PROTECTION FOR CONDUCTOR AT TRANSITION BETWEEN CONCRETE AND SOIL.
18. OGA: **BY VZW E.C.**
19. OGL: **BY VZW E.C.**
20. OHG: FURN. & INST. 2 – 2 AWG BARE SOLID TINNED COPPER GND. WIRE FOR THE 'OVP' H–FRAME TO (EER). (TYP. OF 2 POSTS). CONNECTION (EER) SHALL BE CADWELD.
21. GPSG: **BY VZW E.C.**

TOWER OWNER GROUNDING NOTES

1. ALL UNDERGROUND CONNECTIONS ON THE LIGHTNING PROTECTION SYSTEM SHALL BE EXOTHERMIC WELDED USING THE CADWELD PROCESS. THE **TOWER OWNER E.C.** SHALL FURN. & INST. ALL THESE CONNECTIONS, INCLUDING WELD METALS, MOLDS AND TOOLS. THE **TOWER OWNER E.C.** SHALL FURN. & INST. 5/8" x 10' COPPER CLAD STEEL (COPPER JACKET 0.0012" MIN.) GROUND RODS, DRIVEN VERTICAL TO 36" BELOW FIN. GRADE (OR 6" BELOW FROSTLINE, WHICHEVER IS GREATER) @ 10'–0" O.C. MINIMUM.
2. THE **TOWER OWNER E.C.** SHALL FURN. & INST. 2 AWG BARE SOLID TINNED COPPER GND. WIRE AT A DEPTH OF 36" BELOW FIN. GRADE FOR THE EQUIPMENT PAD (EER) AND ICE BRIDGE (CSG).
3. ALL EXTERIOR GND. CONNECTIONS SHALL BE EXOTHERMIC CADWELD (U.N.O).
4. UPON COMPLETION OF THE EQUIPMENT PAD GROUNDING RING AND BEFORE BONDING TO THE TOWER GROUND RING, THE **TOWER OWNER E.C.** SHALL MEGGER TEST THIS GROUNDING FIELD. THE REQUIRED RESISTANCE LEVEL IS 5 OHMS OR LESS. THE **TOWER OWNER E.C.** SHALL NOTIFY THE ENGINEER IF THESE REQUIREMENTS ARE NOT ACHIEVED. THE **TOWER OWNER E.C.** SHALL SUBMIT PRICING TO TOWER OWNER FOR THE INSTALLATION OF ADDITIONAL GROUND RODS REQUIRED FOR PROPER RESISTANCE. UPON APPROVAL FROM TOWER OWNER, THE **TOWER OWNER E.C.** SHALL INSTALL ADDITIONAL GROUND RODS AS REQUIRED. AFTER PASSING TEST, THE **TOWER OWNER E.C.** SHALL BOND THE EQUIPMENT PAD RING TO THE TOWER RING. THE **TOWER OWNER E.C.** SHALL NOTIFY VERIZON WIRELESS CONSTRUCTION MANAGER AND TOWER OWNER CONSTRUCTION MANAGER 48 HOURS PRIOR TO BACKFILLING TRENCHES, POURING CONCRETE FOR FOUNDATIONS, TO INSPECT BONDS AND INSPECT ANY/ALL BREAKS AND REPAIRS TO THE GROUND RING.
5. GROUND SYSTEM SHALL BE VISUALLY INSPECTED BY A TOWER OWNER AND VERIZON WIRELESS CONSTRUCTION ENGINEER BEFORE BACKFILLING IF REQUESTED.
6. NO SHARP 90° BENDS SHALL BE USED. A LONG SWINGING RADIUS BEND REQUIRED.
7. ALL EQUIPMENT PAD AND EQUIPMENT GROUNDING SHALL BE IN ACCORDANCE WITH VERIZON WIRELESS SPECIFICATIONS.
8. ALL ABOVE GROUND BARE COPPER CONDUCTORS BELOW 10' ABOVE GRADE SHALL BE INSTALLED IN FLEXIBLE PVC CONDUIT. CONDUIT SHALL BE FILLED WITH THEFT DETERRENT COMPOUND (ELECTRIC MOTION COMPANY ANTI–THEFT COMPOUND EM–5101).
9. CONNECTION OF COPPER CONDUCTORS TO GALVANIZED METAL OR ALUMINUM SHALL BE AVOIDED. BRASS OR STAINLESS STEEL LUGS OR BARS SHALL BE USED FOR THESE CONNECTIONS.
10. BARE COPPER CONDUCTORS SHALL NOT BE INSTALLED WHERE THEY MAY BE IN CONTACT WITH GALVANIZED METALS. THE CONDUCTORS SHALL BE INSULATED OR ENCLOSED IN PVC CONDUIT, PLASTIC SEALTIGHT OR INSTALLED WITH STANDOFF SUCH THAT NO CONTACT BETWEEN DISSIMILAR METALS MAY TAKE PLACE.

LEGEND

BBG	BATTERY BAY GROUND
CEPSG	COAX ENTRY PROTECTION SYSTEM GROUND
CG	CABINET GROUND
CSG	CABLE SUPPORT GROUND
EER	BURIED EXTERIOR ELECTRODE GROUND RING
EGC	EQUIPMENT GROUNDING CONDUCTOR (NEC DESIGNATION)
FEG	FIBER ENTRANCE GROUND
FG	FENCE GROUND
FTWGL	FUTURE TOWER WAVEGUIDE GROUND LEAD
GEC	GROUNDING ELECTRODE CONDUCTOR (NEC DESIGNATION)
GEG	GENERATOR ENCLOSURE GROUND
GES	GROUNDING ELECTRODE SYSTEM (NEC DESIGNATION)
GG	GATE GROUND
GPSG	GPS ANTENNA MOUNT GROUND
GRE	GROUND ROD ELECTRODE
IBSG	ICE BRIDGE SUPPORT GROUND
OGA	OVP GROUND ASSEMBLY
OGL	OVP GROUND LEAD
OHG	OVP H–FRAME SUPPORT GROUND
PEG	POWER ENTRANCE GROUND
PCSG	PAD CANOPY SUPPORT GROUND DOWN LEAD
TBG	TOWER BASE GROUND
TWG	TOWER WAVEGUIDE GROUND ASSEMBLY
UG	UFER GROUND (PIER FOUNDATION)
●	CABLE TO CABLE CADWELD CONNECTION
◉	CABLE TO GND. ROD CADWELD CONNECTION
⊠	TEST WELL
▣	INSPECTION PORT CABLE TO CABLE CADWELD CONNECTION

TOWERCOM

241 ATLANTIC BLVD, STE 201
NEPTUNE BEACH, FL 32266

LAB

49030 Pontiac Trail, Suite 100
Wixom, Michigan 48393
PHONE: (248) 705-9212

REV.	DATE	DESCRIPTION
A	08/09/23	ISSUED FOR REVIEW
B	08/21/23	REVISED CD
0	08/24/23	FINAL CD
1	01/25/24	REVISED FINAL CD
2	05/29/24	REVISED FINAL CD
3	02/20/25	REVISED FINAL CD

STATE OF KENTUCKY
DMITRIY V. ALBUL
25093
LICENSED PROFESSIONAL ENGINEER

02-21-25

SITE INFORMATION:

CK AGEE RIDGE

13401 N. HWY 127
ALBANY, KY 42602
CLINTON COUNTY

SITE NUMBER:
724991

SITE NAME:
CK AGEE RIDGE

PID NUMBER: 16933258

DRAWN BY: RC
CHECKED BY: PL
DATE: 08.09.23

SHEET TITLE:

GROUNDING NOTES

SHEET NUMBER:

G–2

MIK PAD & CANOPY REV 4.3.1 02/03/25

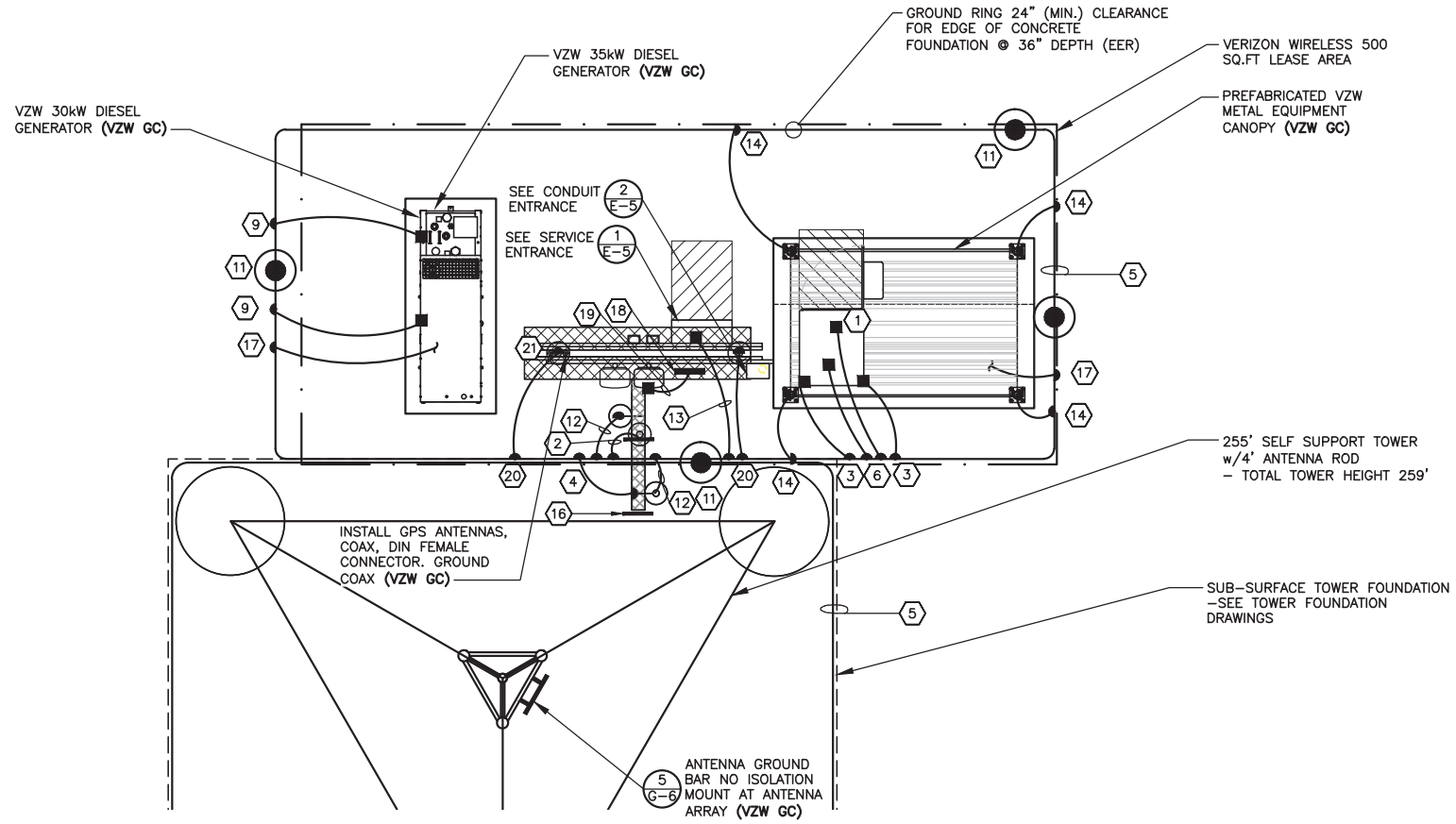

LEGEND	
BBG	BATTERY BAY GROUND
CEPSG	COAX ENTRY PROTECTION SYSTEM GROUND
CG	CABINET GROUND
CSG	CABLE SUPPORT GROUND
EER	BURIED EXTERIOR ELECTRODE GROUND RING
EGC	EQUIPMENT GROUNDING CONDUCTOR (NEC DESIGNATION)
FEG	FIBER ENTRANCE GROUND
FG	FENCE GROUND
FTWGL	FUTURE TOWER WAVEGUIDE GROUND LEAD
GEC	GROUNDING ELECTRODE CONDUCTOR (NEC DESIGNATION)
GEG	GENERATOR ENCLOSURE GROUND
GES	GROUNDING ELECTRODE SYSTEM (NEC DESIGNATION)
GG	GATE GROUND
GPSG	GPS ANTENNA MOUNT GROUND
GRE	GROUND ROD ELECTRODE
IBSG	ICE BRIDGE SUPPORT GROUND
OGA	OVP GROUND ASSEMBLY
OGL	OVP GROUND LEAD
OHG	OVP H-FRAME SUPPORT GROUND
PEG	POWER ENTRANCE GROUND
PCSG	PAD CANOPY SUPPORT GROUND DOWN LEAD
TBG	TOWER BASE GROUND
TWG	TOWER WAVEGUIDE GROUND ASSEMBLY
UG	UFER GROUND (PIER FOUNDATION)
●	CABLE TO CABLE CADWELD CONNECTION
◉	CABLE TO GND. ROD CADWELD CONNECTION
⊠	TEST WELL
▣	INSPECTION PORT CABLE TO CABLE CADWELD CONNECTION

VERIZON WIRELESS GROUNDING PLAN

SCALE: N.T.S.

NORTH

VERIZON WIRELESS GROUNDING KEYED NOTES

1. BBG: VZW E.C. SHALL CONNECT THE 1 – 2/0 AWG INSULATED STRANDED COPPER GND. WIRE COILED UP BY THE TOWER OWNER E.C. FOR THE BATTERY BAY GROUND (BBG). CONNECTION TO THE GROUND BAR IN THE BATTERY BAY SHALL BE MECHANICAL. ROUTE LEAD IN LIQUIDTIGHT FLEXIBLE NONMETALLIC CONDUIT w/ANTI–THEFT COMPOUND.
2. CEPSG: VZW E.C. SHALL FURNISH & INSTALL THE THEFT DETERRENT GROUND POST ASSEMBLY PART #TDSGAPC14 FOR THE COAX ENTRY PROTECTION SYSTEM (AS MFG'D. BY ERICO GROUNDING AND SUPPLIED BY VZW E.C.) TO THE POST. CONNECT THE 2 AWG BARE SOLID TINNED COPPER COILED UP BY TOWER OWNER E.C. TO THE POST. THE CONNECTION TO POST SHALL BE CADWELD. REFER TO THE GENERAL INSTALLATION GUIDE AS SUPPLIED WITH THEFT DETERRENT POST MOUNT GROUND ASSEMBLY. SEE DETAIL 1 ON SHEET G–5 FOR DETAILS.
3. CG: VZW E.C. SHALL FURNISH & INSTALL TWO HOLE LONG BARREL LUGS ON EXISTING 2 AWG BARE TINNED COPPER LEADS. VZW E.C. SHALL FURNISH & INSTALL DRAGON TOOTH WASHERS AND #8 STAINLESS STEEL FASTENERS ON ALL EQUIPMENT CABINET EXTERIOR GROUND LOCATIONS (TYP. 2 PER CABINET). REMOVE ALL SURFACE PAINT AND USE ANTIOXIDENT COMPOUND BETWEEN METAL AND WASHER. ALL LEADS SHALL BE DRESSED TO REDUCE TRIP HAZARDS. DETAIL 3 ON SHEET G–5 FOR DETAILS.
4. CSG: BY TOWER OWNER E.C.
5. EER: BY TOWER OWNER E.C.
6. FEG: VZW E.C. SHALL BRING THE 2 AWG BARE SOLID TINNED COPPER GND. WIRE COILED UP BY TOWER OWNER E.C. FOR (FIBER ENTRANCE GROUND) INTO THE POWER PLANT CABINET AND MAKE A MECHANICAL CONNECTION TO THE FIBER SERVICE GROUND POINT. ROUTE LEAD IN FLEXIBLE NONMETALLIC CONDUIT w/ANTI–THEFT COMPOUND.
7. FG: BY TOWER OWNER E.C.
8. FTWGL: BY TOWER OWNER E.C.
9. GEG: VZW E.C. SHALL CONNECT THE 1 – 2 AWG BARE SOLID TINNED COPPER GND. WIRE COILED UP BY TOWER OWNER E.C. FOR THE GENERATOR ENCLOSURE. CONNECTION TO GENERATOR ENCLOSURE SHALL BE MECHANICAL. ROUTE LEAD IN FLEXIBLE NONMETALLIC CONDUIT w/ANTI–THEFT COMPOUND. *GENERATOR SERVICE GROUND WHERE REQUIRED BY JURISDICTION HAVING AUTHORITY
10. GG: BY TOWER OWNER E.C.
11. GRE: BY TOWER OWNER E.C.
12. IBSG: BY TOWER OWNER E.C.
13. PEG: VZW E.C. SHALL CONNECT 1 – 2 AWG BARE SOLID TINNED COPPER GND WIRE FOR THE POWER ENTRANCE GROUND (PEG) COILED UP BY TOWER OWNER E.C. CONNECTION OF THE COILED WIRE TO THE INTEGRATED LOAD CENTER GROUND BAR SHALL BE MECHANICAL. ROUTE LEAD IN FLEXIBLE NONMETALLIC CONDUIT w/ANTI–THEFT COMPOUND.
14. PCSG: VZW E.C. SHALL CONNECT SOLID TINNED COPPER ONE HOLE GROUND TAB TO COILED UP GROUND WIRE BY TOWER OWNER E.C. WITH AN EXOTHERMIC CONNECTION. THE CONNECTION OF THE COILED GROUND WIRE AND LUG TO THE CANOPY SUPPORT BASE SHALL BE MECHANICAL. SEE DETAIL 3 ON SHEET G–5. ROUTE LEAD IN FLEXIBLE NONMETALLIC CONDUIT w/ANTI–THEFT COMPOUND.
15. TBG: BY TOWER OWNER E.C.
16. TWG: VZW E.C. SHALL FURN. & INST. THEFT DETERRENT GROUND ASSEMBLY KIT PART #TDSGABC14 FOR THE TOWER WAVEGUIDE GROUND (TWG) DIRECTLY TO THE TOWER (SEE SITE SPECIFIC GROUNDING PLAN OF DESIGN DRAWINGS).
17. UG: BY TOWER OWNER E.C.
18. OGA: VZW E.C. SHALL FURN. & INST. THE THEFT DETERRENT GROUND ASSEMBLY KIT PART #TDSGAPC14 FOR THE OVP GROUND (OGL) DIRECTLY TO THE OVP H–FRAME POST. SEE DETAIL 4 ON SHEET G–5.
19. OGL: VZW E.C. SHALL FURN. & INST. 1 – 6 AWG GREEN INSULATED STRANDED COPPER GND. WIRE FROM OVP GROUND POINT TO OVP GROUND ASSEMBLY (OGA). CONNECTION TO GROUND BAR SHALL BE MECHANICAL.
20. OHG: BY TOWER OWNER E.C.
21. GPSG: VZW E.C. SHALL FURN. & INST. 1 – 2 AWG BARE SOLID TINNED COPPER GND. WIRE FOR GPS ANTENNA MOUNT PIPE TO H–FRAME SUPPORT POST (TYP. OF 2). CONNECTION TO PIPE AND POST SHALL BE CADWELD.

VERIZON WIRELESS GROUNDING NOTES

1. ALL UNDERGROUND CONNECTIONS ON THE LIGHTNING PROTECTION SYSTEM SHALL BE EXOTHERMIC WELDED USING THE CADWELD PROCESS. THE VZW E.C. AND GENERAL CONTRACTOR E.C. SHALL FURN. & INST. ALL THESE CONNECTIONS, INCLUDING WELD METALS, MOLDS AND TOOLS. THE E.C. SHALL FURN. & INST. 5/8" x 10' COPPER CLAD STEEL (COPPER JACKET 0.0012" MIN.) GROUND RODS, DRIVEN VERTICAL TO 36" BELOW FIN. GRADE (OR 6" BELOW FROSTLINE, WHICHEVER IS GREATER) @ 10'–0" O.C. MINIMUM.
2. THE VZW E.C. SHALL FURN. & INST. 2 AWG BARE SOLID TINNED COPPER GND. WIRE AT A DEPTH OF 36" BELOW FIN. GRADE FOR THE EQUIPMENT PAD (EER) AND ICE BRIDGE (CSG).
3. THE GENERAL CONTRACTOR E.C. SHALL FURN. & INST. 2 AWG BARE SOLID TINNED COPPER GND. WIRE AT A DEPTH OF 36" BELOW FIN. GRADE FOR THE TOWER (EER), FUTURE TOWER WAVEGUIDE GROUND LEADS (FTWGL), GATE GROUND (GG), FENCE (FG), TOWER BASE GROUND (TBG) AND TOWER WAVEGUIDE GROUND (TWG).
4. ALL EXTERIOR GND. CONNECTIONS SHALL BE EXOTHERMIC CADWELD (U.N.O.).
5. ALL CRIMP LUG CONNECTIONS TO ALL GROUND BARS SHALL BE LUBRICATED WITH A CORROSION INHIBITER ("OXY–GREASE") OR APPROVED EQUAL.
6. UPON COMPLETION OF THE TOWER GROUNDING RING, THE GENERAL CONTRACTOR E.C. SHALL MEGGER TEST THE COUMPOUND GROUNDING FIELD. THE REQUIRED RESISTANCE LEVEL IS 5 OHMS OR LESS. THE GENERAL CONTRACTOR E.C. SHALL NOTIFY THE ENGINEER IF THESE REQUIREMENTS ARE NOT ACHIEVED. THE GENERAL CONTRACTOR E.C. SHALL SUBMIT PRICING TO TOWER OWNER FOR THE INSTALLATION OF ADDITIONAL GROUND RODS REQUIRED FOR PROPER RESISTANCE. UPON APPROVAL FROM TOWER OWNER, THE GENERAL CONTRACTOR E.C. SHALL INSTALL ADDITIONAL GROUND RODS AS REQUIRED. AFTER PASSING TEST, THE GENERAL CONTRACTOR E.C. SHALL NOTIFY TOWER OWNER 48 HOURS PRIOR TO BACKFILLING TRENCHES, POURING CONCRETE FOR FOUNDATIONS, TO INSPECT BONDS AND INSPECT ANY/ALL BREAKS AND REPAIRS TO THE GROUND RING.
7. UPON COMPLETION OF THE RADIO EQUIPMENT PAD GROUNDING RING AND BEFORE BONDING TO THE TOWER GROUNDING RING, THE VZW E.C. SHALL MEGGER TEST THE EQUIPMENT PAD GROUNDING FIELD. THE REQUIRED RESISTANCE LEVEL IS 5 OHMS OR LESS. THE VZW E.C. SHALL NOTIFY THE ENGINEER IF THESE REQUIREMENTS ARE NOT ACHIEVED. THE VZW E.C. SHALL SUBMIT PRICING TO VERIZON WIRELESS FOR THE INSTALLATION OF ADDITIONAL GROUND RODS REQUIRED FOR PROPER RESISTANCE. UPON APPROVAL FROM VERIZON WIRELESS, THE VZW E.C. SHALL INSTALL ADDITIONAL GROUND RODS AS REQUIRED. AFTER PASSING TEST, THEN THE VZW E.C. SHALL BOND THE RADIO EQUIPMENT PAD GROUND RING TO THE TOWER GROUND RING. THE VZW E.C. SHALL NOTIFY VERIZON WIRELESS 48 HOURS PRIOR TO BACKFILLING TRENCHES, POURING CONCRETE FOR FOUNDATIONS, TO INSPECT BONDS AND INSPECT ANY/ALL BREAKS AND REPAIRS TO THE GROUND RING.
8. GROUND SYSTEM SHALL BE VISUALLY INSPECTED BY A TOWER OWNER AND VERIZON WIRELESS CONSTRUCTION ENGINEER BEFORE BACKFILLING IF REQUESTED.
9. GROUND ASSEMBLIES SHALL BE THEFT DETERRENT DESIGN AS MANUFACTURED BY ERICO INC. AND FURNISHED BY VERIZON WIRELESS. PROVIDE TWO (2) LUG HOLES PER VERIZON WIRELESS STANDARDS. UNLESS NOTED OTERWISE.
10. ALL ABOVE GROUND BARE COPPER CONDUCTORS BELOW 10' ABOVE GRADE SHALL BE INSTALLED IN FLEXIBLE PVC CONDUIT. CONDUIT SHALL BE FILLED WITH THEFT DETERRENT COMPOUND (ELECTRIC MOTION COMPANY ANTI–THEFT COMPOUND EM–5101).
11. BARE COPPER CONDUCTORS SHALL NOT BE INSTALLED WHERE THEY MAY BE IN CONTACT WITH GALVANIZED METALS. THE CONDUCTORS SHALL BE INSULATED OR ENCLOSED IN PVC CONDUIT, PLASTIC SEALTIGHT OR INSTALLED WITH STANDOFF SUCH THAT NO CONTACT BETWEEN DISSIMILAR METALS MAY TAKE PLACE.
12. CONNECTION OF COPPER CONDUCTORS TO GALVANIZED METAL OR ALUMINUM SHALL BE AVOIDED. BRASS OR STAINLESS STEEL LUGS OR BARS SHALL BE USED FOR THESE CONNECTIONS.
13. NO SHARP 90° BENDS SHALL BE USED. A LONG SWINGING RADIUS BEND REQUIRED.
14. ALL GROUNDING SHALL BE IN ACCORDANCE WITH VERIZON WIRELESS SPECIFICATIONS.

TOWERCOM
241 ATLANTIC BLVD, STE 201
NEPTUNE BEACH, FL 32266

LAB
49030 Pontiac Trail, Suite 100
Wixom, Michigan 48393
PHONE: (248) 705-9212

REV.	DATE	DESCRIPTION
A	08/09/23	ISSUED FOR REVIEW
B	08/21/23	REVISED CD
0	08/24/23	FINAL CD
1	01/25/24	REVISED FINAL CD
2	05/29/24	REVISED FINAL CD
3	02/20/25	REVISED FINAL CD

STATE OF KENTUCKY
DMITRIY V. ALBUL
25093
LICENSED PROFESSIONAL ENGINEER
02-21-25

SITE INFORMATION:
CK AGEE RIDGE
13401 N. HWY 127
ALBANY, KY 42602
CLINTON COUNTY

SITE NUMBER:
724991

SITE NAME:
CK AGEE RIDGE

PID NUMBER:	16933258
DRAWN BY:	RC
CHECKED BY:	PL
DATE:	08.09.23

SHEET TITLE:
VERIZON WIRELESS GROUNDING PLAN & NOTES

SHEET NUMBER:
G–3

MIK PAD & CANOPY REV 4.3.1 02/03/25

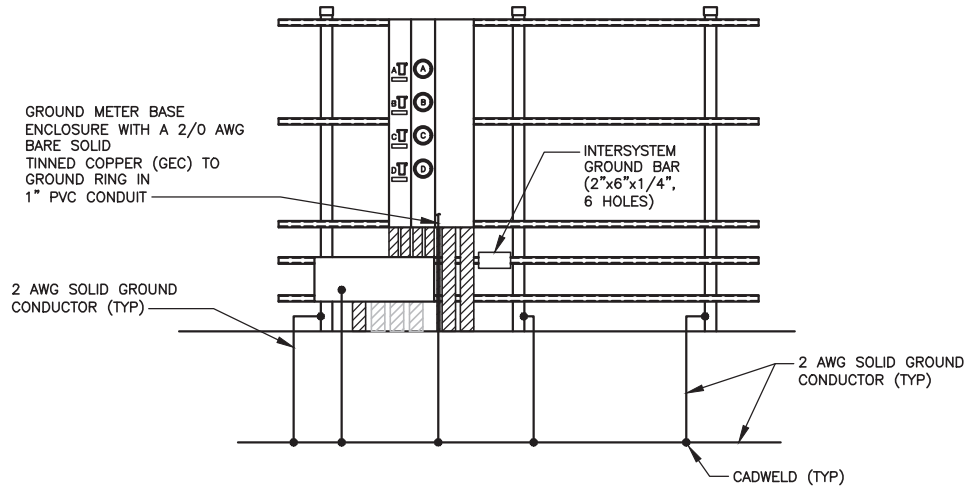

METER BOARD STRUCTURE GROUNDING

SCALE: 1/4" = 1'-0"

1 / G-4

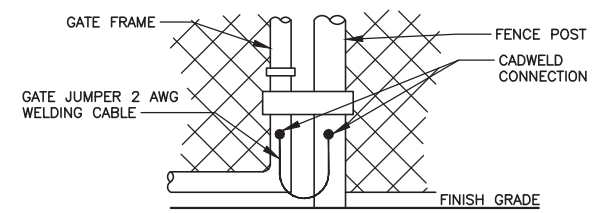

GATE GROUNDING DETAIL

SCALE: N.T.S.

4 / G-4

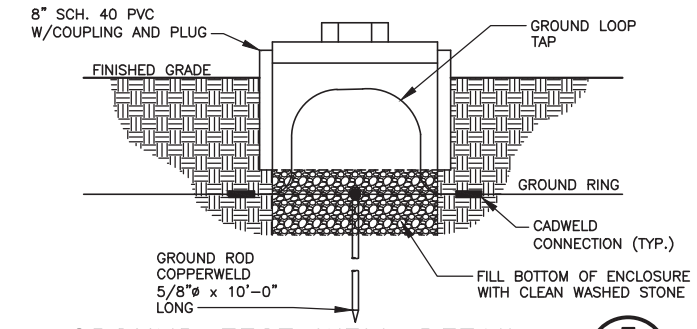

GROUND TEST WELL DETAIL

SCALE: N.T.S.

7 / G-4

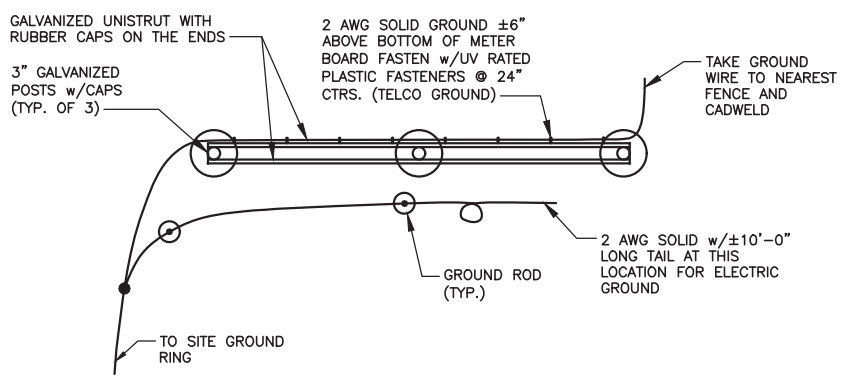

METER BOARD STRUCTURE GROUND PLAN

SCALE: N.T.S.

2 / G-4

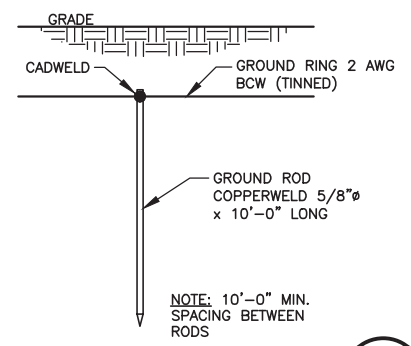

GROUND ROD DETAIL

SCALE: N.T.S.

(TYP. FOR CONTRACTOR AND VZW GC)

5 / G-4

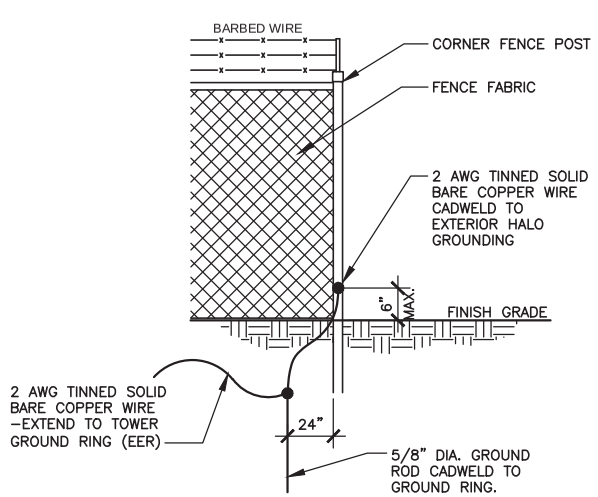

FENCE GROUNDING DETAIL

SCALE: N.T.S.

3 / G-4

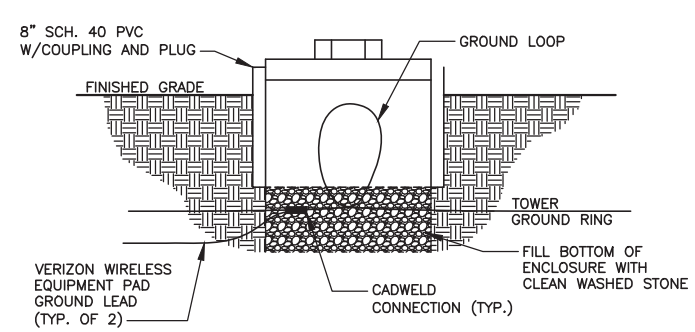

INSPECTION SLEEVE DETAIL

SCALE: N.T.S.

6 / G-4

TOWERCOM

241 ATLANTIC BLVD, STE 201
NEPTUNE BEACH, FL 32266

LAB

49030 Pontiac Trail, Suite 100
Wixom, Michigan 48393
PHONE: (248) 705-9212

REV.	DATE	DESCRIPTION
A	08/09/23	ISSUED FOR REVIEW
B	08/21/23	REVISED CD
0	08/24/23	FINAL CD
1	01/25/24	REVISED FINAL CD
2	05/29/24	REVISED FINAL CD
3	02/20/25	REVISED FINAL CD

STATE OF KENTUCKY
DMITRIY V. ALBUL
25093
LICENSED PROFESSIONAL ENGINEER

02-21-25

SITE INFORMATION:

CK AGEE RIDGE

13401 N. HWY 127
ALBANY, KY 42602
CLINTON COUNTY

SITE NUMBER:
724991

SITE NAME:
CK AGEE RIDGE

PID NUMBER: 16933258

DRAWN BY: RC
CHECKED BY: PL
DATE: 08.09.23

SHEET TITLE:

GROUNDING DETAILS

SHEET NUMBER:

G-4

MIK PAD & CANOPY REV 4.3.1 02/03/25

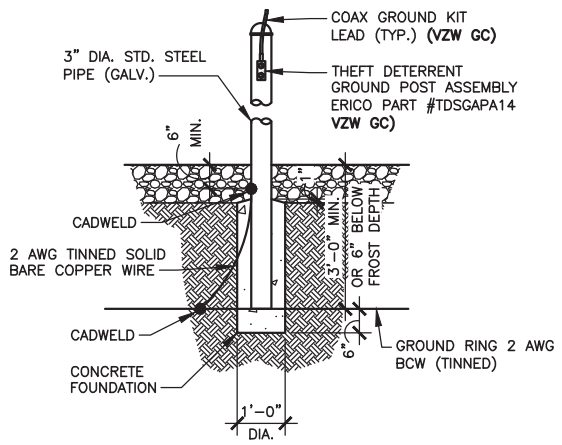

THEFT DETERRENT POST MOUNT GROUND DETAIL (CEPSG)

1 / G-5

SCALE: N.T.S.
(BY VZW GC)

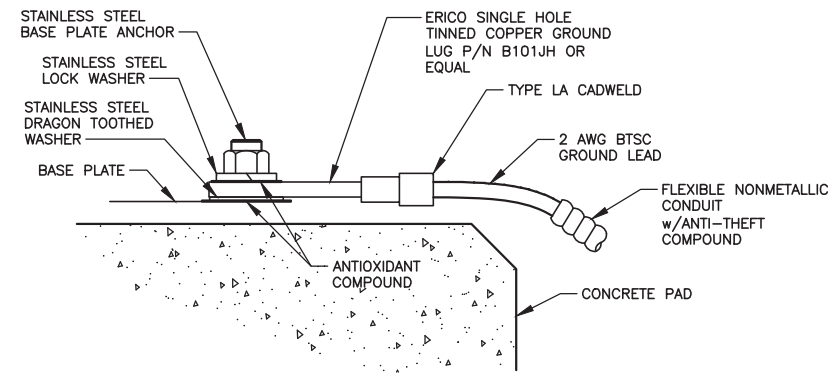

1. ALL HARDWARE SHALL BE 18-8 STAINLESS STEEL.
2. INSTALL ANCHOR LENGTH TO ALLOW EXPOSURE OF AT LEAST TWO THREADS.
3. AT CONNECTIONS MADE TO STEEL OR ANY OTHER DISSIMILAR METALS, A DRAGON TOOTH WASHER SHALL BE USED BETWEEN THE CONNECTOR AND METAL.
4. IF NO DRAGON TOOTH WASHER IS USED, THOROUGHLY REMOVE A SECTION OF THE COATING APPROXIMATELY THE SIZE OF THE CONNECTOR WITH AND ABRASIVE STYLE TOOL.
5. No-Ox-ID ANTI-OXIDATION COMPOUND (SANCHEM) SHALL BE USED AT ALL COPPER TO COPPER CONNECTIONS.
6. A ZINC BASED (GRAY COLORED) ANTI-OXIDATION COMPOUND SHALL BE USED AT ALL COPPER TO STEEL CONNECTIONS.
7. PENTROX OR EQUAL ANTI-OXIDATION COMPOUND SHALL BE USED AT ALL COPPER TO ALUMINUM CONNECTIONS.

GROUND LUG TO BASEPLATE INSTALLATION DETAIL

3 / G-5

SCALE: N.T.S.

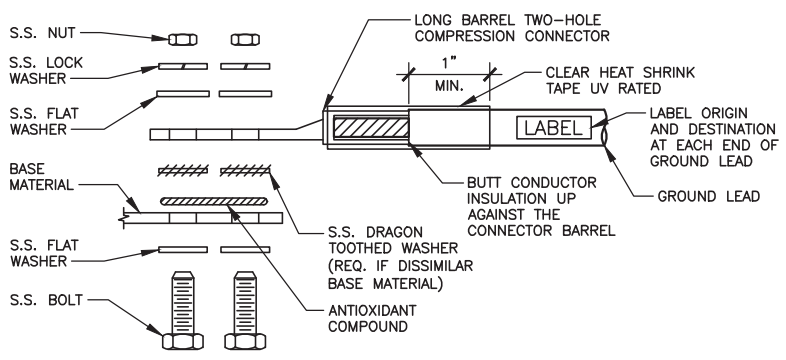

1. ALL HARDWARE SHALL BE 18-8 STAINLESS STEEL.
2. CHOOSE BOLT LENGTH TO ALLOW EXPOSURE OF AT LEAST TWO THREADS.
3. BACK TO BACK LUG CONNECTIONS ARE ACCEPTABLE WHEN BONDED TO A GROUND BAR OR STEEL OBJECT.
4. AT CONNECTIONS MADE TO STEEL OR ANY OTHER DISSIMILAR METALS, A DRAGON TOOTH WASHER SHALL BE USED BETWEEN THE CONNECTOR AND METAL.
5. IF NO DRAGON TOOTH WASHER IS USED, THOROUGHLY REMOVE A SECTION OF THE COATING APPROXIMATELY THE SIZE OF THE CONNECTOR WITH AND ABRASIVE STYLE TOOL.
6. No-Ox-ID ANTI-OXIDATION COMPOUND (SANCHEM) SHALL BE USED AT ALL COPPER TO COPPER CONNECTIONS.
7. A ZINC BASED (GRAY COLORED) ANTI-OXIDATION COMPOUND SHALL BE USED AT ALL COPPER TO STEEL CONNECTIONS.
8. PENTROX OR EQUAL ANTI-OXIDATION COMPOUND SHALL BE USED AT ALL COPPER TO ALUMINUM CONNECTIONS.

GROUND LUG INSTALLATION DETAIL

2 / G-5

SCALE: N.T.S.

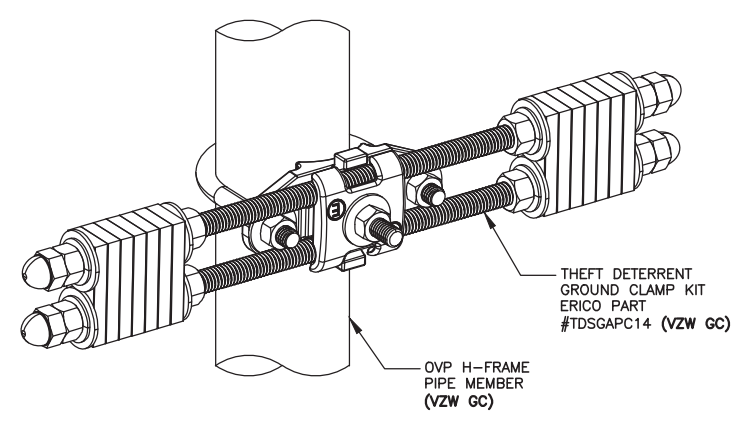

OVP GROUND ASSEMBLY (OGA)

4 / G-5

SCALE: N.T.S.
(BY VZW GC)

TOWERCOM
241 ATLANTIC BLVD, STE 201
NEPTUNE BEACH, FL 32266

LAB
49030 Pontiac Trail, Suite 100
Wixom, Michigan 48393
PHONE: (248) 705-9212

REV.	DATE	DESCRIPTION
A	08/09/23	ISSUED FOR REVIEW
B	08/21/23	REVISED CD
0	08/24/23	FINAL CD
1	01/25/24	REVISED FINAL CD
2	05/29/24	REVISED FINAL CD
3	02/20/25	REVISED FINAL CD

STATE OF KENTUCKY
DMITRIY V. ALBUL
25093
LICENSED PROFESSIONAL ENGINEER
02-21-25

SITE INFORMATION:
CK AGEE RIDGE
13401 N. HWY 127
ALBANY, KY 42602
CLINTON COUNTY

SITE NUMBER:
724991

SITE NAME:
CK AGEE RIDGE

PID NUMBER: 16933258

DRAWN BY: RC
CHECKED BY: PL
DATE: 08.09.23

SHEET TITLE:
GROUNDING DETAILS

SHEET NUMBER:
G-5

MIK PAD & CANOPY REV 4.3.1 02/03/25

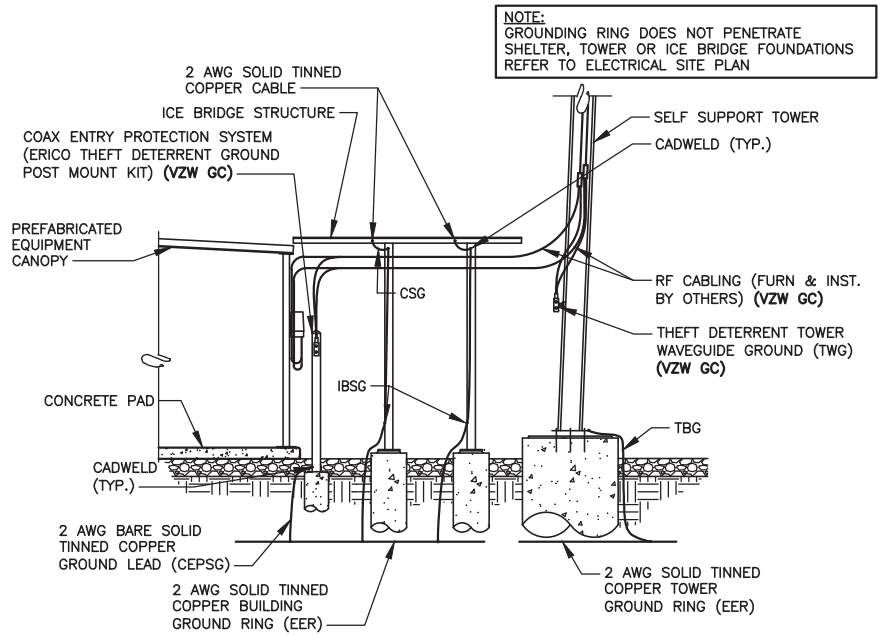

INTERIOR/EXTERIOR GROUNDING DETAIL

SCALE: N.T.S.

1 / G-6

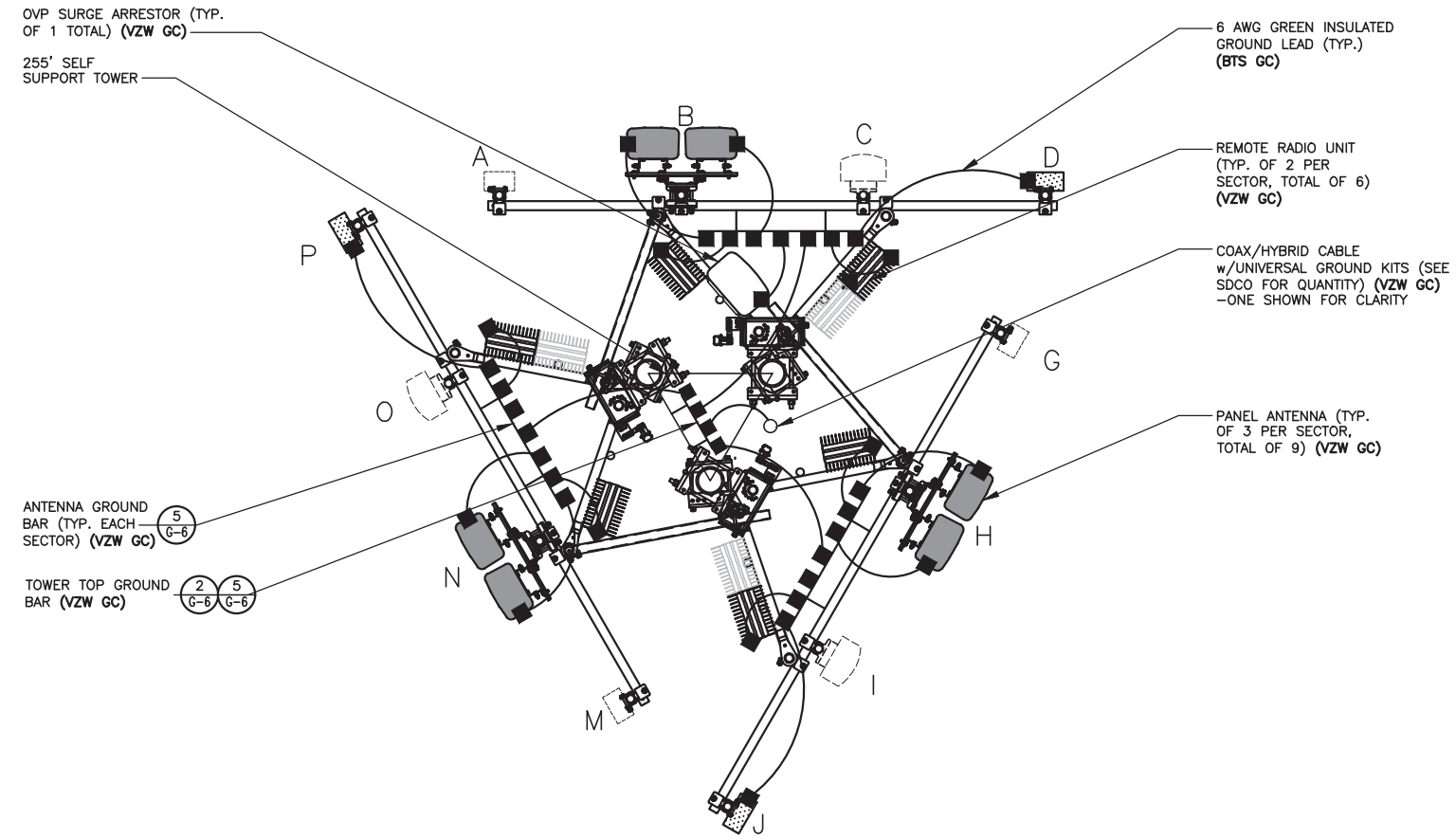

ANTENNA LEVEL GROUNDING PLAN

SCALE: N.T.S.

3 / G-6

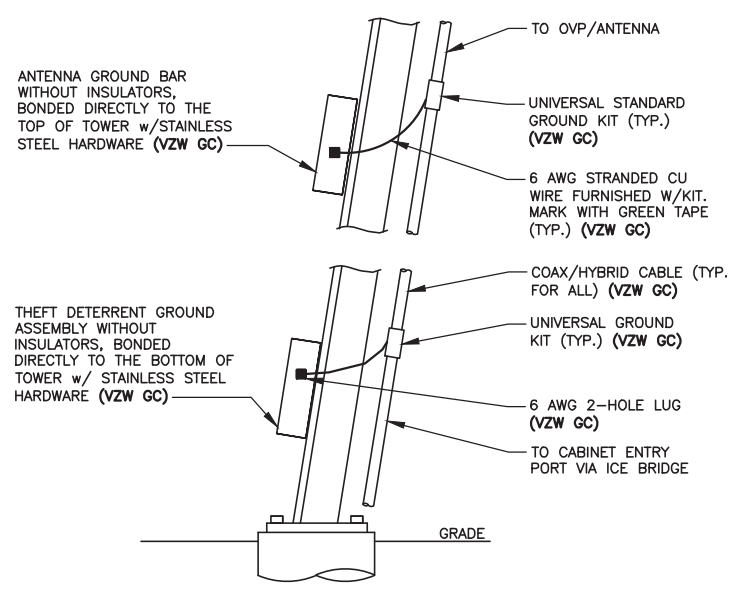

NOTE:
1. NUMBER OF GROUNDING BARS MAY VARY DEPENDING ON THE TYPE OF TOWER, ANTENNA LOCATIONS AND CONNECTION ORIENTATION. PROVIDE AS REQUIRED (VZW GC)
2. INSTALL UNIVERSAL GROUND KITS AT ALL GROUND BAR LOCATIONS. (VZW GC)

ANTENNA CABLE GROUNDING INSTALLATION DETAIL

SCALE: N.T.S.

2 / G-6

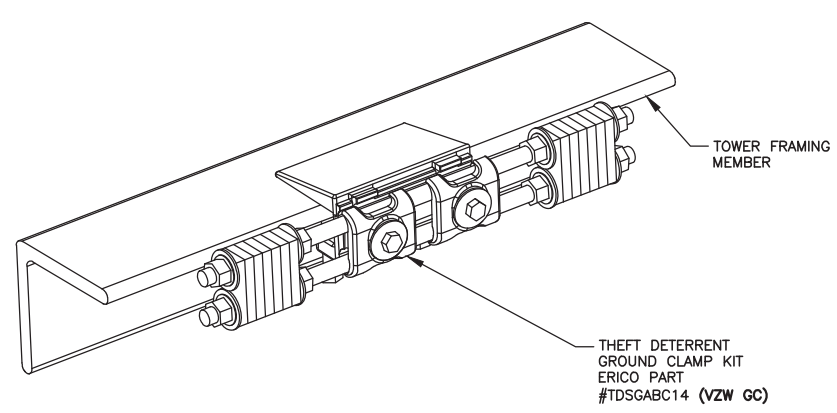

TOWER BOTTOM GROUND ASSEMBLY

SCALE: N.T.S.
(BY VZW GC)

4 / G-6

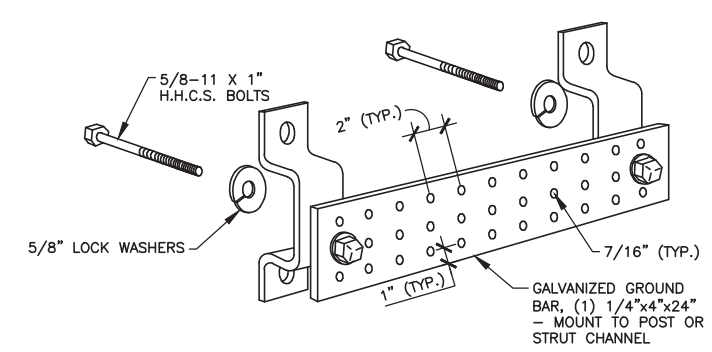

ANTENNA & TOWER TOP GROUND BAR

SCALE: N.T.S.
(BY VZW GC)

5 / G-6

TOWERCOM
241 ATLANTIC BLVD, STE 201
NEPTUNE BEACH, FL 32266

LAB
49030 Pontiac Trail, Suite 100
Wixom, Michigan 48393
PHONE: (248) 705-9212

REV.	DATE	DESCRIPTION
A	08/09/23	ISSUED FOR REVIEW
B	08/21/23	REVISED CD
0	08/24/23	FINAL CD
1	01/25/24	REVISED FINAL CD
2	05/29/24	REVISED FINAL CD
3	02/20/25	REVISED FINAL CD

STATE OF KENTUCKY
DMITRIY V. ALBUL
25093
LICENSED PROFESSIONAL ENGINEER
02-21-25

SITE INFORMATION:
CK AGEE RIDGE
13401 N. HWY 127
ALBANY, KY 42602
CLINTON COUNTY

SITE NUMBER:
724991

SITE NAME:
CK AGEE RIDGE

PID NUMBER: 16933258
DRAWN BY: RC
CHECKED BY: PL
DATE: 08.09.23

SHEET TITLE:
ANTENNA LEVEL GROUNDING PLAN & DETAILS

SHEET NUMBER:
G–6

MIK PAD & CANOPY REV 4.3.1 02/03/25

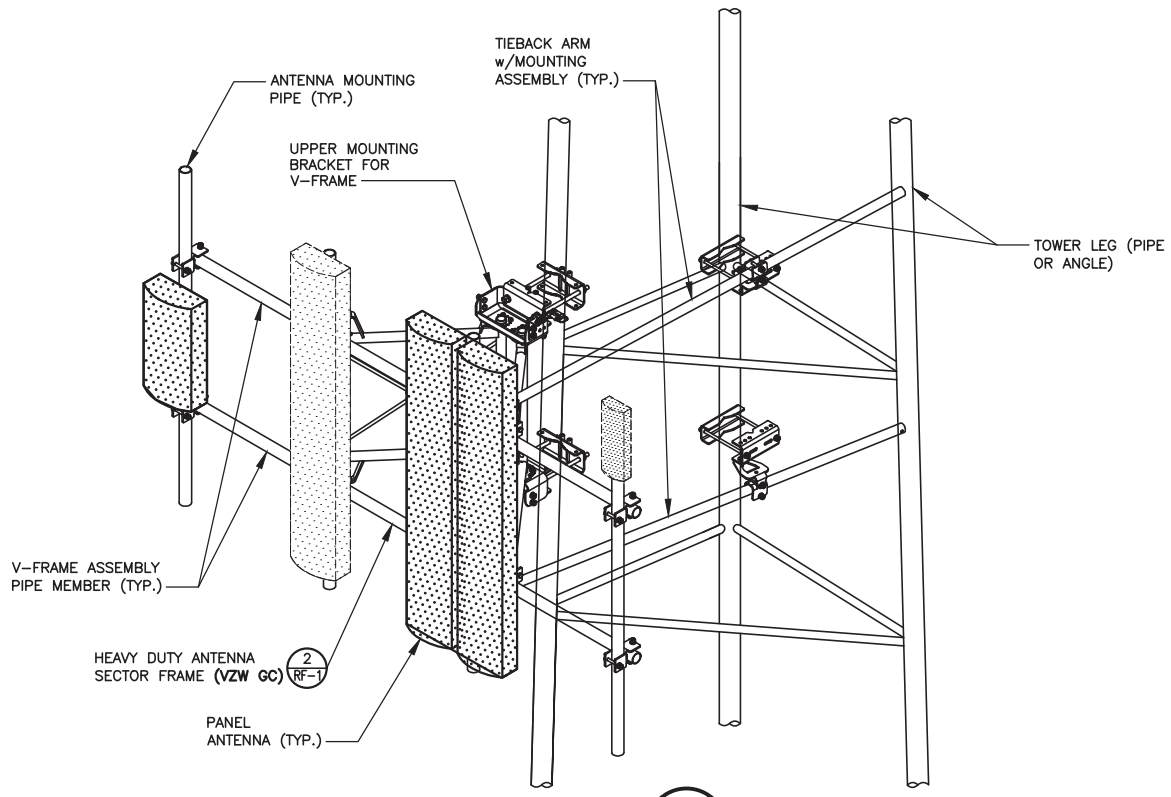

ANTENNA MOUNT 1 RF-1

SCALE: N.T.S.
(BY VZW GC)

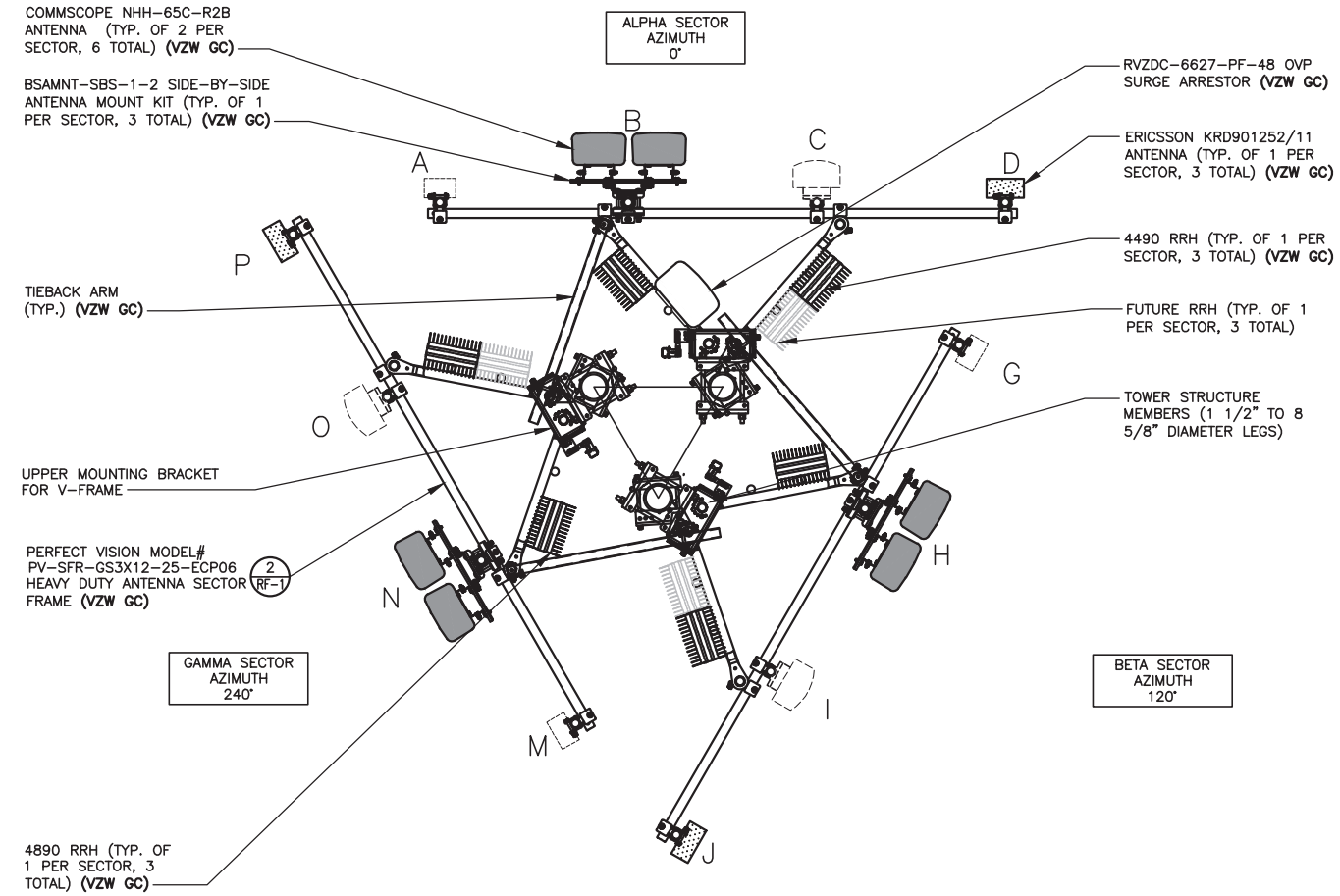

ANTENNA AND HYBRID CABLES

CONTRACTOR MAY SUBSTITUTE AN ALTERNATE METHOD TO SUPPORT THE HYBRID CABLES, BUT SHALL SUBMIT DETAILING OF THE ALTERNATE METHOD TO STRUCTURAL ENGINEER FOR APPROVAL PRIOR TO PROCEEDING WITH THE INSTALLATION OF THE CABLES.

THE CONTRACTOR IS RESPONSIBLE TO REVIEW THE STRUCTURAL ANALYSIS FOR REQUIRED HYBRID CABLE SUPPORT CONFIGURATIONS NOT INDICATED ON THE DETAIL. I.E. BUNDLED CABLES.

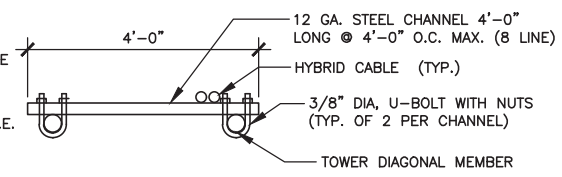

HYBRID CABLE SUPPORT DETAIL

NOTE:
FINAL ANTENNA LEVEL PLAN AND PASSING MOUNT ANALYSIS MUST MATCH. NOTIFY VZW CONSTRUCTION MANAGER IF DISCREPANCY EXISTS.

ANTENNA LAYOUT – PLAN VIEW 2 RF-1

SCALE: N.T.S.
(BY VZW GC)

GENERAL NOTES:

1. VERIFY EACH HYBRID CABLE LENGTH, DIAMETER, ROUTING, AND ALL MOUNTING APPURTENANCES WITH OWNER PRIOR TO ORDER.
2. THE MAXIMUM HYBRID CABLE LENGTH HAS BEEN ESTIMATED AT ____ FEET, APPROXIMATELY. ACTUAL ANTENNA CABLE LENGTH MAY VARY FROM ESTIMATED MAXIMUM LENGTH AND MUST BE VERIFIED.
3. TAG ALL MAIN CABLES AT TWO (2) LOCATIONS. 1) AT ANTENNAS 2) OUTSIDE EQUIPMENT CABINET NEAR THE WAVEGUIDE ENTRY PORT.
4. EACH CABLE SHALL BE GROUNDED AT (3) THREE LOCATIONS. ANTENNA LEVEL ON TOWER, TOWER BASE, AND EQUIPMENT H-FRAME.
5. HYBRID CABLES TO BE SUPPORTED EVERY 36" OFF MOUNTING FRAMES WITH STAINLESS STEEL HANGERS.
6. JUMPER CABLES TO BE SUPPORTED EVERY 18" WITH STAINLESS STEEL HANGERS.

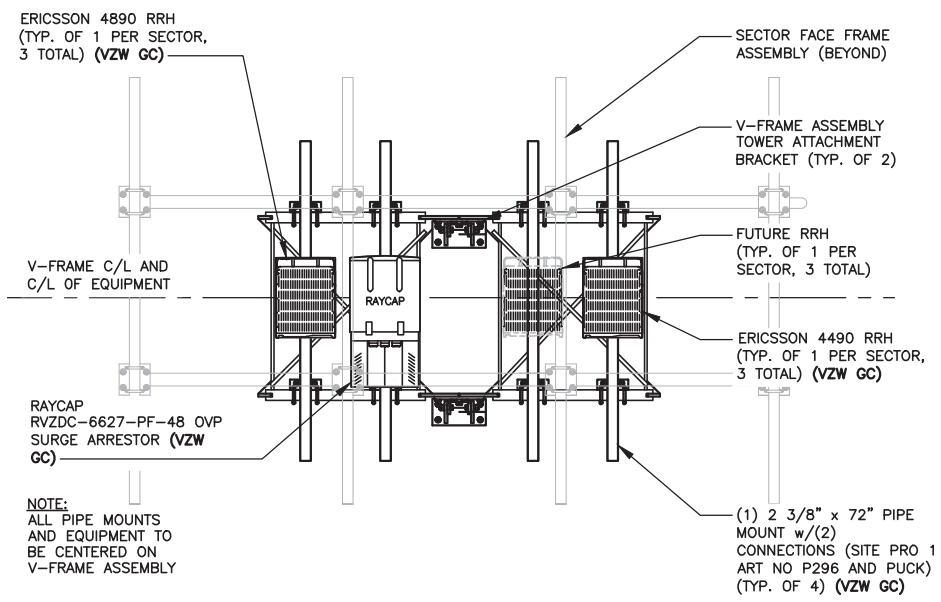

ANTENNA MOUNT – REAR VIEW (FLATTENED) 3 RF-1

SCALE: N.T.S.
(BY VZW GC)

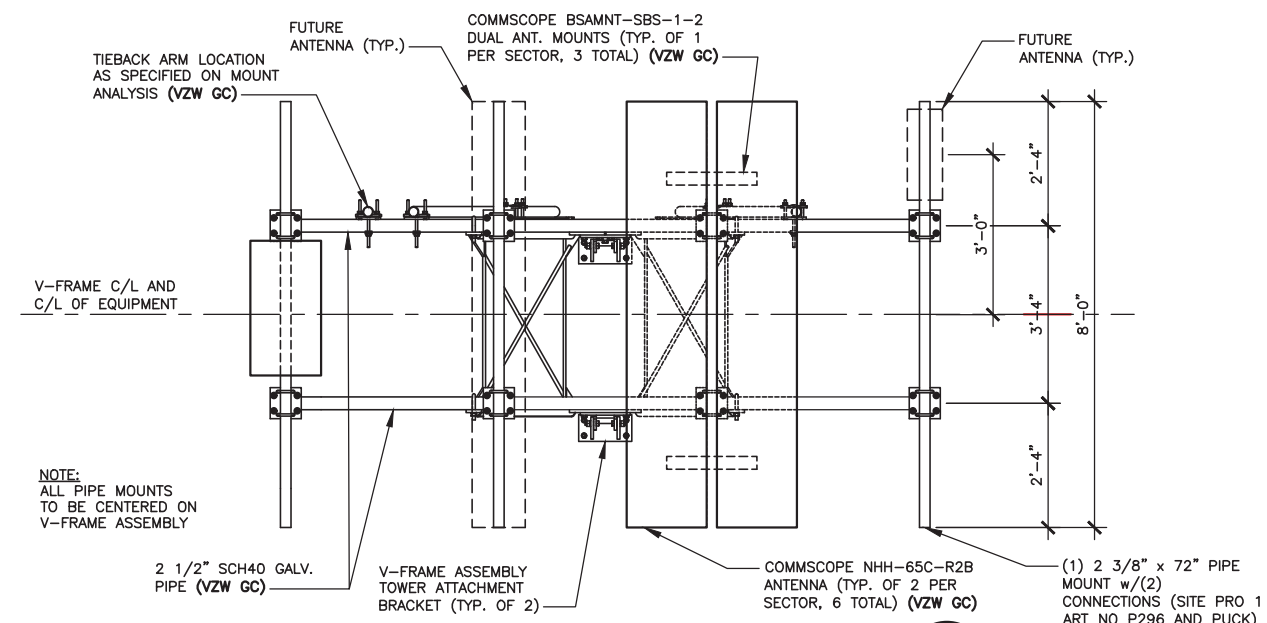

ANTENNA MOUNT – FRONT VIEW 4 RF-1

SCALE: N.T.S.
(BY VZW GC)

TOWERCOM
241 ATLANTIC BLVD, STE 201
NEPTUNE BEACH, FL 32266

LAB
49030 Pontiac Trail, Suite 100
Wixom, Michigan 48393
PHONE: (248) 705-9212

REV.	DATE	DESCRIPTION
A	08/09/23	ISSUED FOR REVIEW
B	08/21/23	REVISED CD
0	08/24/23	FINAL CD
1	01/25/24	REVISED FINAL CD
2	05/29/24	REVISED FINAL CD
3	02/20/25	REVISED FINAL CD

STATE OF KENTUCKY
DMITRIY V. ALBUL
25093
LICENSED PROFESSIONAL ENGINEER
02-21-25

SITE INFORMATION:
CK AGEE RIDGE
13401 N. HWY 127
ALBANY, KY 42602
CLINTON COUNTY

SITE NUMBER:
724991

SITE NAME:
CK AGEE RIDGE

PID NUMBER: 16933258

DRAWN BY: RC
CHECKED BY: PL
DATE: 08.09.23

SHEET TITLE:
ANTENNA PLAN & DETAILS (REFERENCE ONY)

SHEET NUMBER:
RF-1

MIK PAD & CANOPY REV 4.3.1 02/03/25

NOTES:
1. THE RIGHT SIDE OF THE GENERATOR IS SERVICE ACCESSIBLE.
2. 6 AMP BATTERY CHARGER.
3. 120VAC ENGINE BLOCK HEATER.
4. GENERATOR MUST BE GROUNDED.
5. SOUND ATTENUATED ENCLOSURE STANDARD WITH GENERATOR.
6. MUST ALLOW FREE FLOW OF DISCHARGE AIR AND EXHAUST.
7. MUST ALLOW FREE FLOW OF INTAKE AIR.
8. EASY ACCESS SERVICE PANEL IS LOCATED ON THE RIGHT SIDE OF THE GENERATOR ONLY.
9. BASE TANK REQUIRES ALL STUB-UPS TO BE IN THE REAR TANK STUB-UP AREA.
10. SEE TABLE FOR SUBBASE FUEL TANK CAPACITY.
11. TANK EQUIPPED WITH FIRE SAFETY VALVE ON FUEL SUPPLY LINE.
12. IT IS THE RESPONSIBILITY OF THE INSTALLATION TECHNICIAN TO ENSURE THAT THE GENERATOR INSTALLATION COMPLIES WITH ALL APPLICABLE CODES, STANDARDS, AND REGULATIONS.
13. GENERATOR IS INSTALLED ON A UL-142 RATE DOUBLE WALL SUBBASE FUEL TANK.
14. DRAWING SHOWS STATE TANK CONFIGURATION WITH DUAL 12' NORMAL VENTS USED ON THE WA. STATE TANK. STANDARD NORMAL VENT HEIGHT IS 2" ABOVE FUEL FILL HIEGHT.

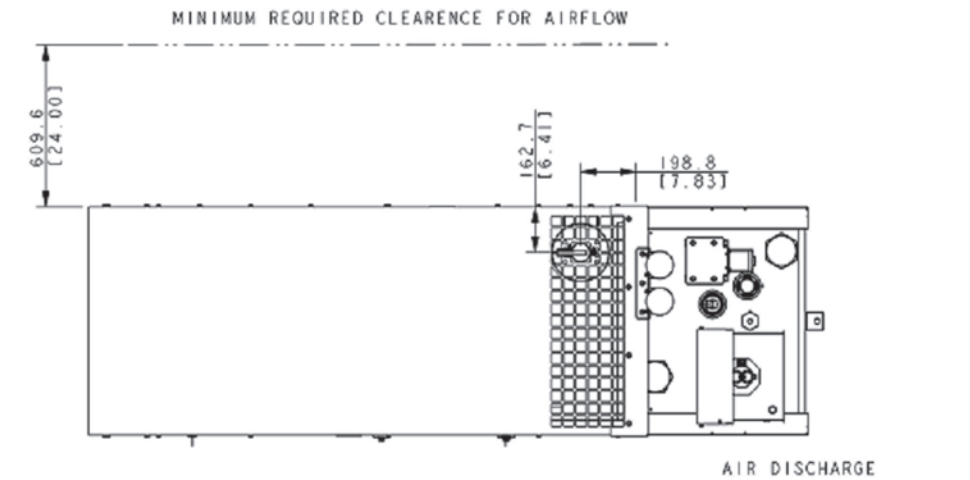

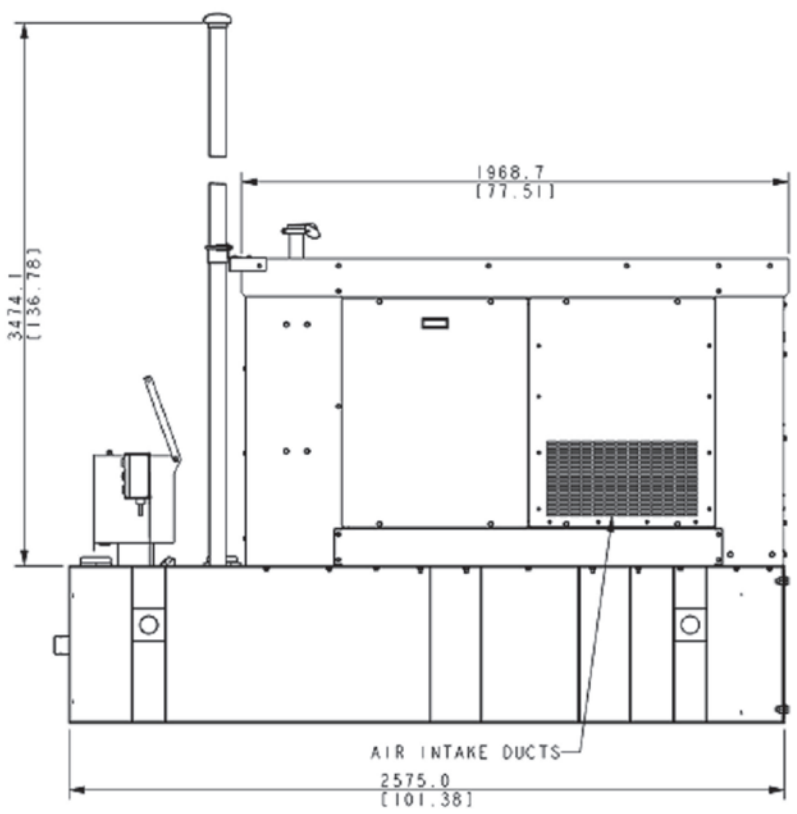

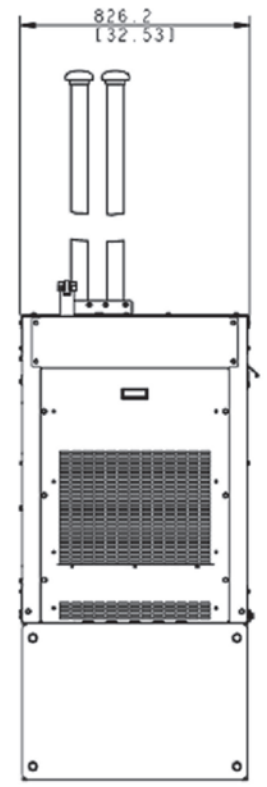

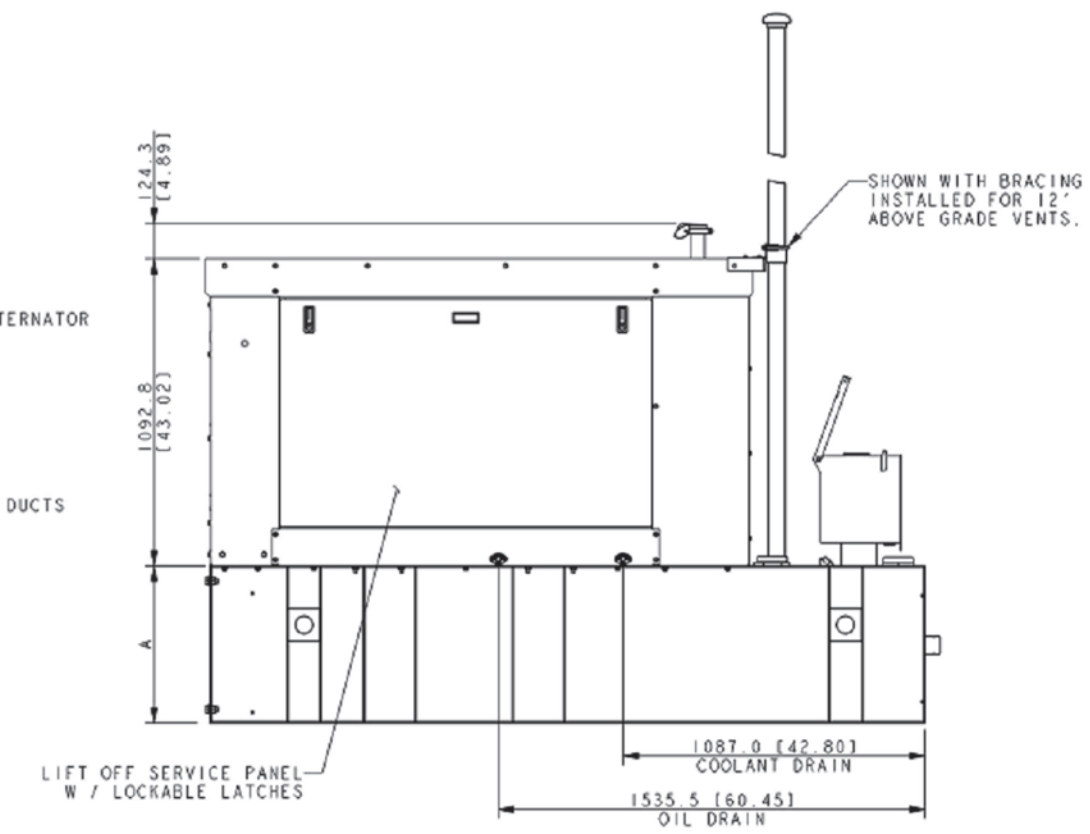

GENSET	TANK P/N	TANK HT (A) MM [IN]	DESCRIPTION	ASSY WEIGHT
20REOZK	GM99199-MA1	558.8 [22.0]	SKID/WA ST TANK 148 GAL	984 KG [2170 LBS]
20REOZK	GM99199-MA2	736.6 [29.0]	SKID/WA ST TANK 210 GAL	1147 KG [2529 LBS]
20REOZK	GM99199-MA3	736.6 [29.0]	SKID/PH ST TANK 210 GAL	1113 KG [2454 LBS]
20REOZK	GM99199-MA4	736.6 [29.0]	SKID/ST TANK 210 GAL	1079 KG [2379 LBS]
20REOZK	GM99199-MA5	558.8 [22.0]	SKID/ST TANK 148 GAL	984 KG [2170 LBS]
20REOZK	GM99199-MA6	736.6 [29.0]	SKID/MI ST TANK 210 GAL	1079 KG [2379 LBS]
30REOZK	GM99199-MA1	558.8 [22.0]	SKID/WA ST TANK 148 GAL	1051 KG [2316 LBS]
30REOZK	GM99199-MA2	736.6 [29.0]	SKID/WA ST TANK 210 GAL	1212 KG [2671 LBS]
30REOZK	GM99199-MA3	736.6 [29.0]	SKID/PH ST TANK 210 GAL	1179 KG [2600 LBS]
30REOZK	GM99199-MA4	736.6 [29.0]	SKID/ST TANK 210 GAL	1145 KG [2525 LBS]
30REOZK	GM99199-MA5	558.8 [22.0]	SKID/ST TANK 148 GAL	984 KG [2170 LBS]
30REOZK	GM99199-MA6	736.6 [29.0]	SKID/MI ST TANK 210 GAL	1145 KG [2525 LBS]

20-30KW KOHLER DIESEL
SOUND ENCL W/ LIFT OFF PANEL

NOTE: TANK SHOWN IN THESE DRAWING VIEWS IS CONFIGURED FOR WA. STATE WITH DUAL 120' ABOVE GRADE NORMAL VENTS, THESE ITEMS NOT INCLUDED IN ALL STATE CONFIGURATIONS.

REV	DATE	ON COMPOSITE DWGS, SEE PART NO. FOR REVISION LEVEL	BY
-	2-3-16	NEW DRAWING. [CT138365]	JMB
A	5-4-17	SEE SHEET 2 & 3 FOR CHANGE. [CT173550]	JMB
B	2-22-18	(A-8) ADDED GM99199-MA6 TO TABLE. [CT184584]	JMB

UNLESS OTHERWISE SPECIFIED: IN DIMENSIONS ARE IN MILLIMETERS
IN TOLERANCES ARE:
X.XX ± 0.25
X.X ± 1.0
X ± 1.5
ANGLES ± 0° 30'
SURFACE FINISH 125 MAX.
THIRD ANGLE PROJECTION

APPROVALS		DATE
DRAWN	JMB	2-3-16
CHECKED	JMB	2-3-16
APPROVED	KLC	2-3-16

KOHLER CO. METRIC | PRO-E
POWER SYSTEMS, KOHLER, WI 53044 U.S.A.

TITLE: DIMENSION PRINT, KDI2504TM VERIZON ST TANK W/SOUND ENCL.
SCALE 0.09 | CAD NO. | SHEET 1 of 3
DWG NO. ADV-8856 | D

TOWERCOM
241 ATLANTIC BLVD, STE 201
NEPTUNE BEACH, FL 32266

LAB
49030 Pontiac Trail, Suite 100
Wixom, Michigan 48393
PHONE: (248) 705-9212

REV.	DATE	DESCRIPTION
A	08/09/23	ISSUED FOR REVIEW
B	08/21/23	REVISED CD
0	08/24/23	FINAL CD
1	01/25/24	REVISED FINAL CD
2	05/29/24	REVISED FINAL CD
3	02/20/25	REVISED FINAL CD

STATE OF KENTUCKY
DMITRIY V. ALBUL
25093
LICENSED PROFESSIONAL ENGINEER
02-21-25

SITE INFORMATION:
CK AGEE RIDGE
13401 N. HWY 127
ALBANY, KY 42602
CLINTON COUNTY

SITE NUMBER: 724991

SITE NAME: CK AGEE RIDGE

PID NUMBER: 16933258
DRAWN BY: RC
CHECKED BY: PL
DATE: 08.09.23

SHEET TITLE: GENERATOR SPECIFICATIONS (REFERENCE ONY)

SHEET NUMBER: REF—1

MIK PAD & CANOPY REV 4.3.1 02/03/25

CELLCO PARTNERSHIP
D/B/A

verizon

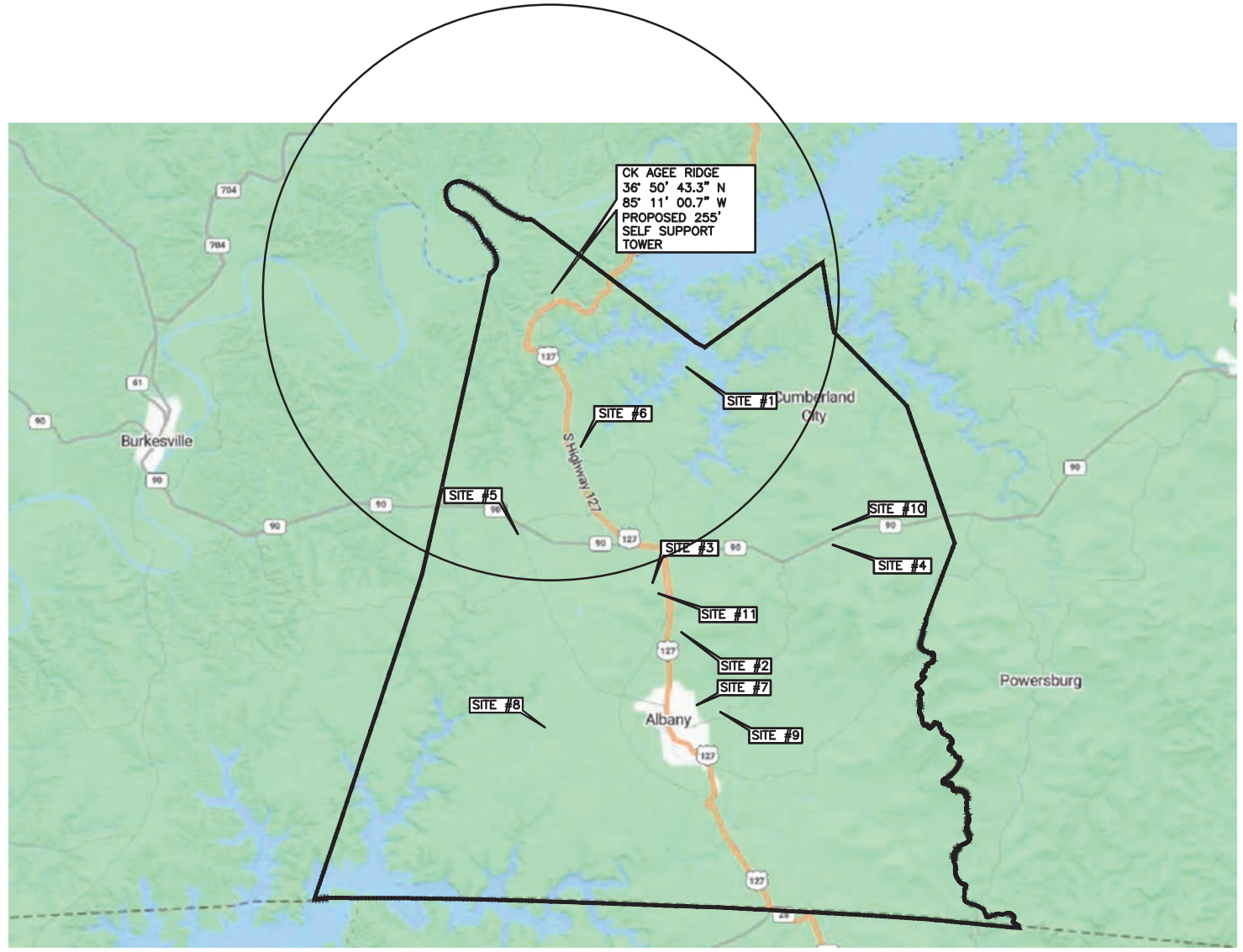

MAP NOT TO SCALE

CITY OF ALBANY
CLINTON COUNTY, KENTUCKY
VERIZON WIRELESS SITE
CK AGEE RIDGE
TOWER LOCATION EXHIBIT

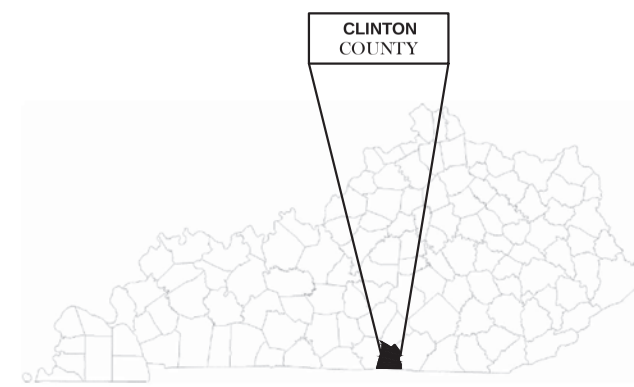

KENTUCKY

SITE#1: FCC# 1063507, GLOBAL TOWER, LLC. THROUGH AMERICAN TOWERS, LLC 36° 48' 41.0"N, 085° 07' 47.0"W

SITE#2: FCC# 1239784, CELLCO PARTNERSHIP 36° 43' 21.4"N, 085° 07' 37.2"W

SITE#3: FCC# 1258265, SBA TOWERS VII, LLC 36° 44' 36.2"N, 085° 08' 34.1"W

SITE#4: FCC# 1258266, SBA TOWERS II LLC 36° 45' 21.5" N, 085° 03' 35.7"W

SITE#5: FCC# 1258453, CELLCO PARTNERSHIP 36° 45' 30.5"N, 085° 12' 09.6"W

SITE#6: FCC# 1265526, SOUTH KENTUCKY RURAL ELECTRIC COOPERATIVE CORPORATION 36° 47' 12.7"N, 085° 10' 31.1"W

SITE#7: FCC# 1273817, AMERICAN TOWERS LLC 36° 41' 51.7"N, 085° 07' 19.1"W

SITE#8: FCC# 1291700, CELLCO PARTNERSHIP 36° 40' 59.7"N, 085° 10' 55.2"W

SITE#9: FCC# 1311145, CELLCO PARTNERSHIP 36° 41' 34.4"N, 085° 06' 52.9"W

SITE#10: FCC# 1321412, HARMONI TOWERS, LLC 36° 45' 38.2"N, 085° 03' 32.6"W

SITE#11: FCC# 1322513, HARMONI TOWERS, LLC 36° 44' 26.3"N, 085° 08' 17.5"W

TOWERCOM

241 ATLANTIC BLVD, STE 201
NEPTUNE BEACH, FL 32266

LAB

49030 Pontiac Trail, Suite 100
Wixom, Michigan 48393
PHONE: (248) 705-9212

REV.	DATE	DESCRIPTION
A	08/09/23	ISSUED FOR REVIEW
B	08/21/23	REVISED CD
0	08/24/23	FINAL CD
1	01/25/24	REVISED FINAL CD
2	05/29/24	REVISED FINAL CD
3	02/20/25	REVISED FINAL CD

STATE OF KENTUCKY
DMITRIY V. ALBUL
25093
LICENSED
PROFESSIONAL ENGINEER

02-21-25

SITE INFORMATION:

CK AGEE RIDGE

13401 N. HWY 127
ALBANY, KY 42602
CLINTON COUNTY

SITE NUMBER:
724991

SITE NAME:
CK AGEE RIDGE

PID NUMBER:	16933258
DRAWN BY:	RC
CHECKED BY:	PL
DATE:	08.09.23

SHEET TITLE:

PSC MAP

SHEET NUMBER:

PSC—1

MIK PAD & CANOPY REV 4.3.1 02/03/25

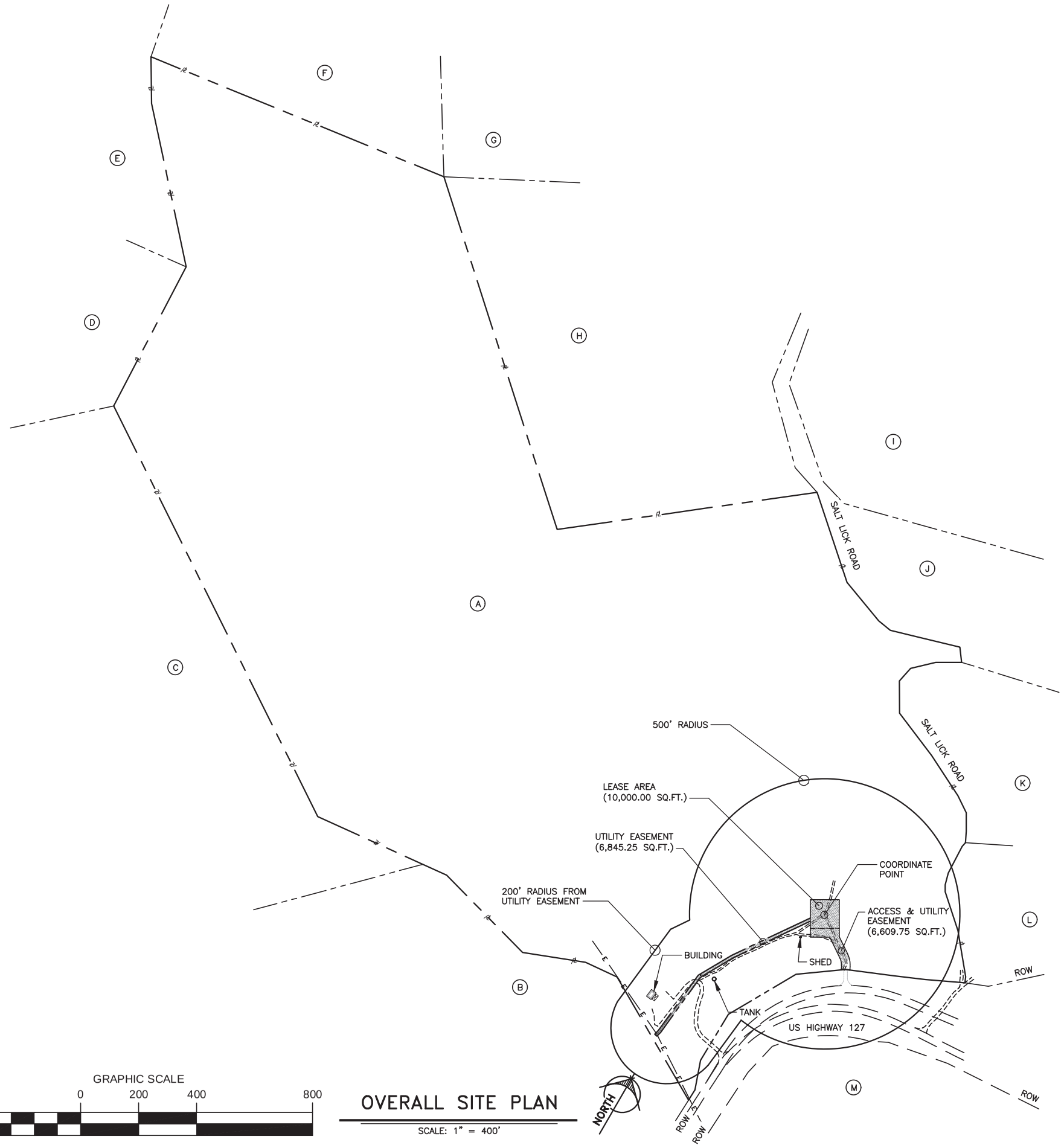

OVERALL SITE PLAN

SCALE: 1" = 400'

A. MAP 016-00-00-01201
LOWHORN, JERRY LYNN & FRANCES
1406 SPECK RO
ALBANY, KY 42602

B. MAP 16-00-00-018.00
LOWHORN, NEWELL
1282 SPECK RD
ALBANY, KY 42602

C. MAP 016-00-00-003.12
LOWHORN, JERRY LYNN & FRANCES
1406 SPECK RD
ALBANY, KY 42602

D. MAP 016-00-00-003.10
LOWHORN, JERRY LYNN & FRANCES
1406 SPECK RD
ALBANY, KY 42602

E. MAP 016-00-00-020.00
LOWHORN, NEWELL
1406 SPECK RD
ALBANY, KY 42602

F. MAP 016-00-00-007.00
HADLEY, CARVIN WILDON & DONNA
1080 CLIFTY CREEK RD
JAMESTOWN, KY 42629

G. MAP 016-00-00-009.00
PRICE, JOAN & JANET BALLEW
1715 MANSRELD LUCAS RD
MANSRELO, OH 44903

H. MAP 016-00-00-006.00
BALLEW, JASON/ BALLEW, MICHAEL
JAMES/BALLEW, TIMOTHY JOE
5754 RESIK DR
HUBER HEIGHTS, OH 45424

I. MAP 016-00-00-011.00
BALLEW, JANET & PRICE, JOAN
BALLEW, JERRY
1715 MANSFIELD LUCAS RD
MANSFIELD, OH 44903

J. MAP 016-00-00-0/208
MELTON, LONNIE
PO BOX 603
ALBANY, KY 42602

K. MAP 016-00-00-01211
GOSSAGE, GLORIA
PO BOX 592
BURKESVILLE, KY 42717

L. MAP 016-00-00-012.00
CONNER, BRYAN
C/O FUENTES, MARIA E &
CAMPOS, PAUL A
690 BLUEBIRD DR
RUSSELL SPRING, KY 42642

M. MAP 016-00-00-0/202, LOT XX
HAUNTED ROCK PROPERTIES
PO BOX 35
ALBANY, KY 42602

TOWERCOM
241 ATLANTIC BLVD, STE 201
NEPTUNE BEACH, FL 32266

LAB
49030 Pontiac Trail, Suite 100
Wixom, Michigan 48393
PHONE: (248) 705-9212

REV.	DATE	DESCRIPTION
A	08/09/23	ISSUED FOR REVIEW
B	08/21/23	REVISED CD
0	08/24/23	FINAL CD
1	01/25/24	REVISED FINAL CD
2	05/29/24	REVISED FINAL CD
3	02/20/25	REVISED FINAL CD

STATE OF KENTUCKY
DMITRIY V. ALBUL
25093
LICENSED PROFESSIONAL ENGINEER
02-21-25

SITE INFORMATION:
CK AGEE RIDGE
13401 N. HWY 127
ALBANY, KY 42602
CLINTON COUNTY

SITE NUMBER:
724991

SITE NAME:
CK AGEE RIDGE

PID NUMBER: 16933258

DRAWN BY: RC
CHECKED BY: PL
DATE: 08.09.23

SHEET TITLE:
PSC MAP

SHEET NUMBER:
PSC-2

MIK PAD & CANOPY REV 4.3.1 02/03/25

Sabre Industries™
INNOVATION DELIVERED

Structural Design Report

255' S3TL Series HD1 Self-Supporting Tower
Site: CK Agee Ridge, KY

Prepared for: TOWERCOM VI-B, LLC
by: Sabre Industries ™

Job Number: 543014

May 20, 2024

STATE OF KENTUCKY
KEITH J. TINDALL
20897
LICENSED
PROFESSIONAL ENGINEER

5/20/24

Digitally Signed By Keith Tindall
DN: C=US,SERIALNUMBER=MAS20240205295307,ST=Texas,L=Alvarado,O=SABRE INDUSTRIES\, INC.,CN=Keith Tindall Date: 2024.05.20 12:42:36

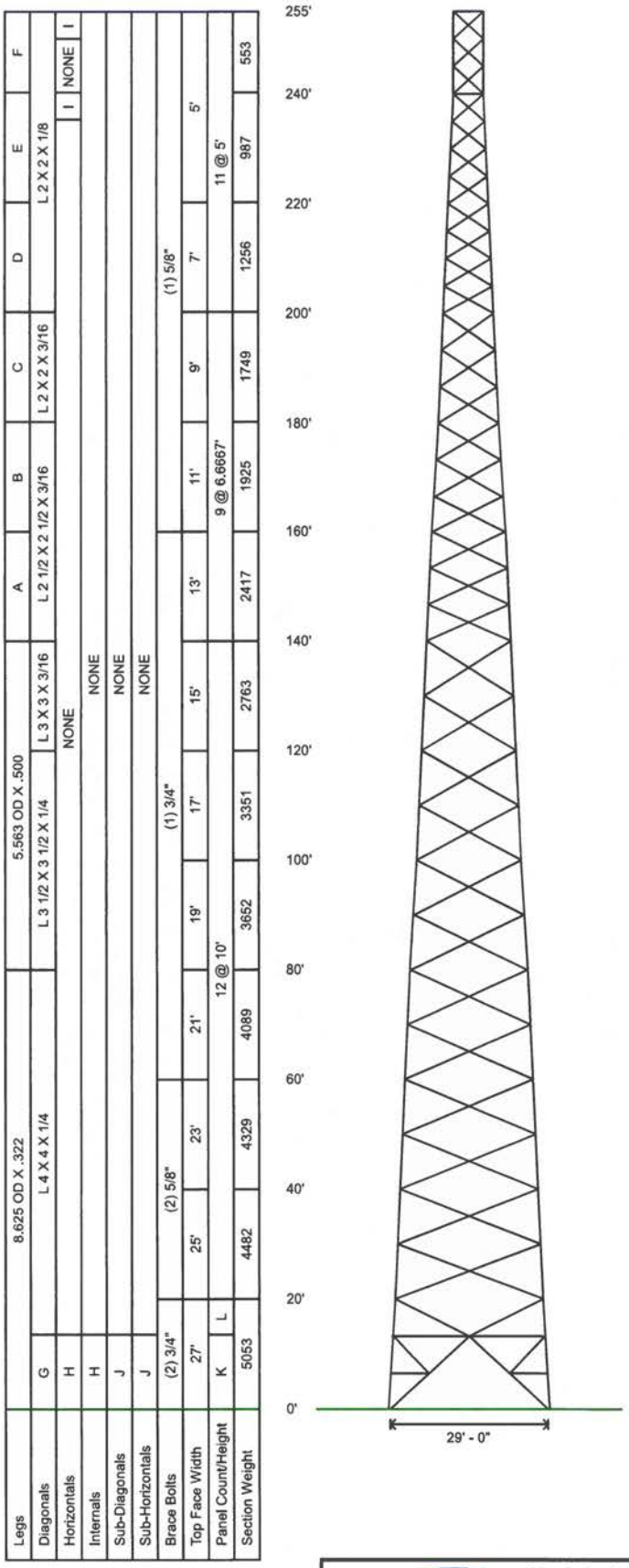

Designed Appurtenance Loading

Elev	Description	Tx-Line
250	(1) 42,000 Sq. Inches (12,000 lbs) (below top)	(18) 1 5/8"
238	(1) 30,000 Sq. Inches 8,000# (below top)	(12) 1 5/8"
228	(1) 20,000 sq. in. (4000 lbs) (below top)	(12) 1 5/8"
218	(1) 15,000 sq. in. (3000 lbs) (below top)	(6) 1 5/8"

Design Criteria - ANSI/TIA-222-H

Wind Speed (No Ice)	105 mph
Wind Speed (Ice)	30 mph
Design Ice Thickness	1.50 in
Risk Category	II
Exposure Category	B
Topographic Factor Procedure	Method 1 (Simplified)
Topographic Category	1
Ground Elevation	1046 ft
Seismic Importance Factor, Ie	1.00
0.2-sec Spectral Response, Ss	0.189 g
1-sec Spectral Response, S1	0.098 g
Site Class	D (DEFAULT)
Seismic Design Category	C
Basic Seismic Force-Resisting System	Telecommunication Tower (Truss: Steel)

Base Reactions - Wind/Ice

Total Foundation		Individual Footing	
Shear (kips)	51.85	Shear (kips)	32.25
Axial (kips)	229.18	Compression (kips)	351
Moment (ft-kips)	8080	Uplift (kips)	287

Base Reactions - Seismic

Total Foundation		Individual Footing	
Shear (kips)	3.95	Shear (kips)	4.14
Axial (kips)	97.41	Compression (kips)	65
Moment (ft-kips)	812	Uplift (kips)	10

Notes

1) All legs are A500 (50 ksi Min. Yield).
2) All braces are A572 Grade 50.
3) All brace bolts are A325-X.
4) The tower model is S3TL Series HD1.
5) Transmission lines are to be attached to standard 12 hole waveguide ladders with stackable hangers.
6) Azimuths are relative (not based on true north).
7) Foundation loads shown are maximums.
8) All unequal angles are oriented with the short leg vertical.
9) Weights shown are estimates. Final weights may vary.
10) This tower design and, if applicable, the foundation design(s) shown on the following page(s) also meet or exceed the requirements of the 2015 International Building Code.
11) Tower Rating: 98.68%
12) No grout is required under the base plates.

Sabre Industries
INNOVATION DELIVERED

Sabre Industries
7101 Southbridge Drive
P.O. Box 658
Sioux City, IA 51102-0658
Phone: (712) 258-6690
Fax: (712) 279-0814

Job:	543014
Customer:	TOWERCOM VI-B, LLC
Site Name:	CK Agee Ridge, KY
Description:	255' S3TL
Date:	5/20/2024 By: KJT

Material List

Display	Value
A	5.563 OD X .375
B	5.563 OD X .258
C	4.500 OD X .337
D	3.500 OD X .300
E	3.500 OD X .216
F	2.375 OD X .154

Display	Value
G	L 5 X 3 1/2 X 1/4
H	L 3 X 3 X 1/4
I	L 2 X 2 X 1/8
J	L 2 1/2 X 2 1/2 X 3/16
K	1 @ 13.333'
L	1 @ 6.667'

Sabre Industries
INNOVATION DELIVERED

Sabre Industries
7101 Southbridge Drive
P.O. Box 658
Sioux City, IA 51102-0658
Phone: (712) 258-6690
Fax: (712) 279-0814

Job:	**543014**
Customer:	TOWERCOM VI-B, LLC
Site Name:	CK Agee Ridge, KY
Description:	255' S3TL
Date:	5/20/2024 By: KJT

No.: 543014
Date: 05/20/2024
By: KJT

Customer: TOWERCOM VI-B, LLC
Site: CK Agee Ridge, KY
255 ft. Model S3TL Series HD1 Self Supporting Tower

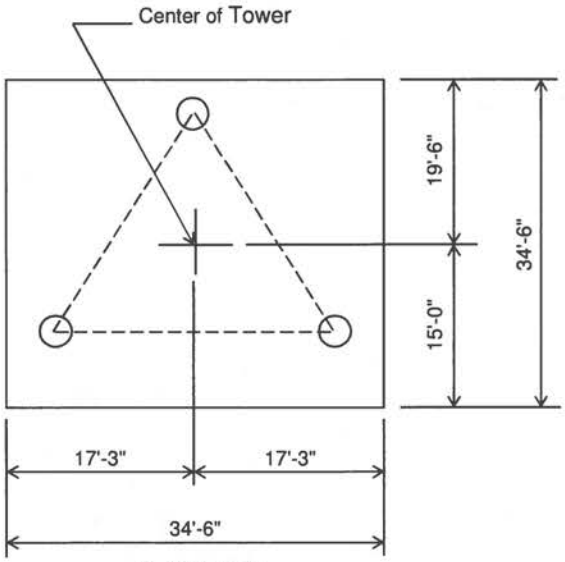

PLAN VIEW

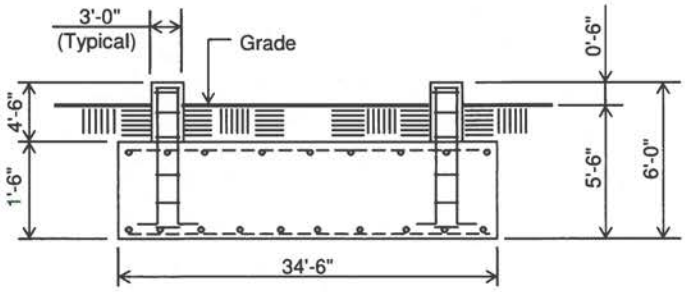

ELEVATION VIEW
(69.7 cu. yds.)
(1 REQD.; NOT TO SCALE)

CAUTION: Center of tower is not in center of slab.

Notes:

1) Concrete shall have a minimum 28-day compressive strength of 4,500 psi, in accordance with ACI 318-14.
2) Rebar to conform to ASTM specification A615 Grade 60.
3) All rebar to have a minimum of 3" concrete cover.
4) All exposed concrete corners to be chamfered 3/4".
5) The foundation design is based on the geotechnical report by Delta Oaks Group, Project No. GEO24-21180-08, dated April 23, 2024.
6) See the geotechnical report for compaction requirements, if specified.
7) 4' of soil cover is required over the entire area of the foundation slab.
8) The bottom anchor bolt template shall be positioned as closely as possible to the bottom of the anchor bolts.

Rebar Schedule per Mat and per Pier	
Pier	(16) #7 vertical rebar w/ hooks at bottom w/ #4 rebar ties, two (2) within top 5" of pier then 4" C/C
Mat	(67) #6 horizontal rebar evenly spaced each way top and bottom. (268 total)
Anchor Bolts per Leg	
(6) 1.25" dia. x 63" F1554-105 on a 12.75" B.C. w/ 8" max. projection above concrete.	

7101 Southbridge Dr - P.O. Box 658 - Sioux City, IA 51102-0658 - Phone 712.258.6690 - Fax 712.258.8250

No.: 543014
Date: 05/20/2024
By: KJT

Customer: TOWERCOM VI-B, LLC
Site: CK Agee Ridge, KY
255 ft. Model S3TL Series HD1 Self Supporting Tower

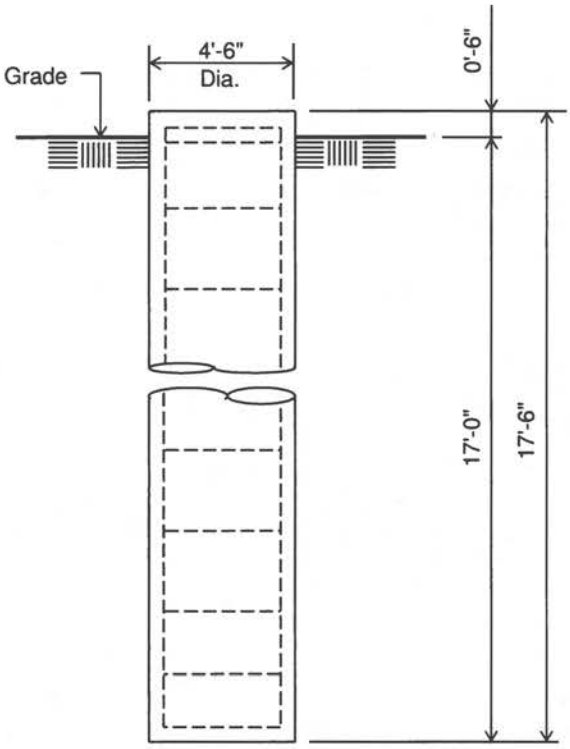

ELEVATION VIEW
(10.3 cu. yds.)
(3 REQUIRED; NOT TO SCALE)

Notes:

1) Concrete shall have a minimum 28-day compressive strength of 4,500 psi, in accordance with ACI 318-14.
2) Rebar to conform to ASTM specification A615 Grade 60.
3) All rebar to have a minimum of 3" concrete cover.
4) All exposed concrete corners to be chamfered 3/4".
5) The foundation design is based on the geotechnical report by Delta Oaks Group, Project No. GEO24-21180-08, dated April 23, 2024.
6) See the geotechnical report for drilled pier installation requirements, if specified.
7) The bottom anchor bolt template shall be positioned as closely as possible to the bottom of the anchor bolts.

Rebar Schedule per Pier	
Pier	(14) #9 vertical rebar w/ #4 ties, two (2) within top 5" of pier then 12" C/C
Anchor Bolts per Leg	
(6) 1.25" dia. x 63" F1554-105 on a 12.75" B.C. w/ 8" max. projection above concrete.	

7101 Southbridge Dr - P.O. Box 658 - Sioux City, IA 51102-0658 - Phone 712.258.6690 - Fax 712.258.8250

Maximum

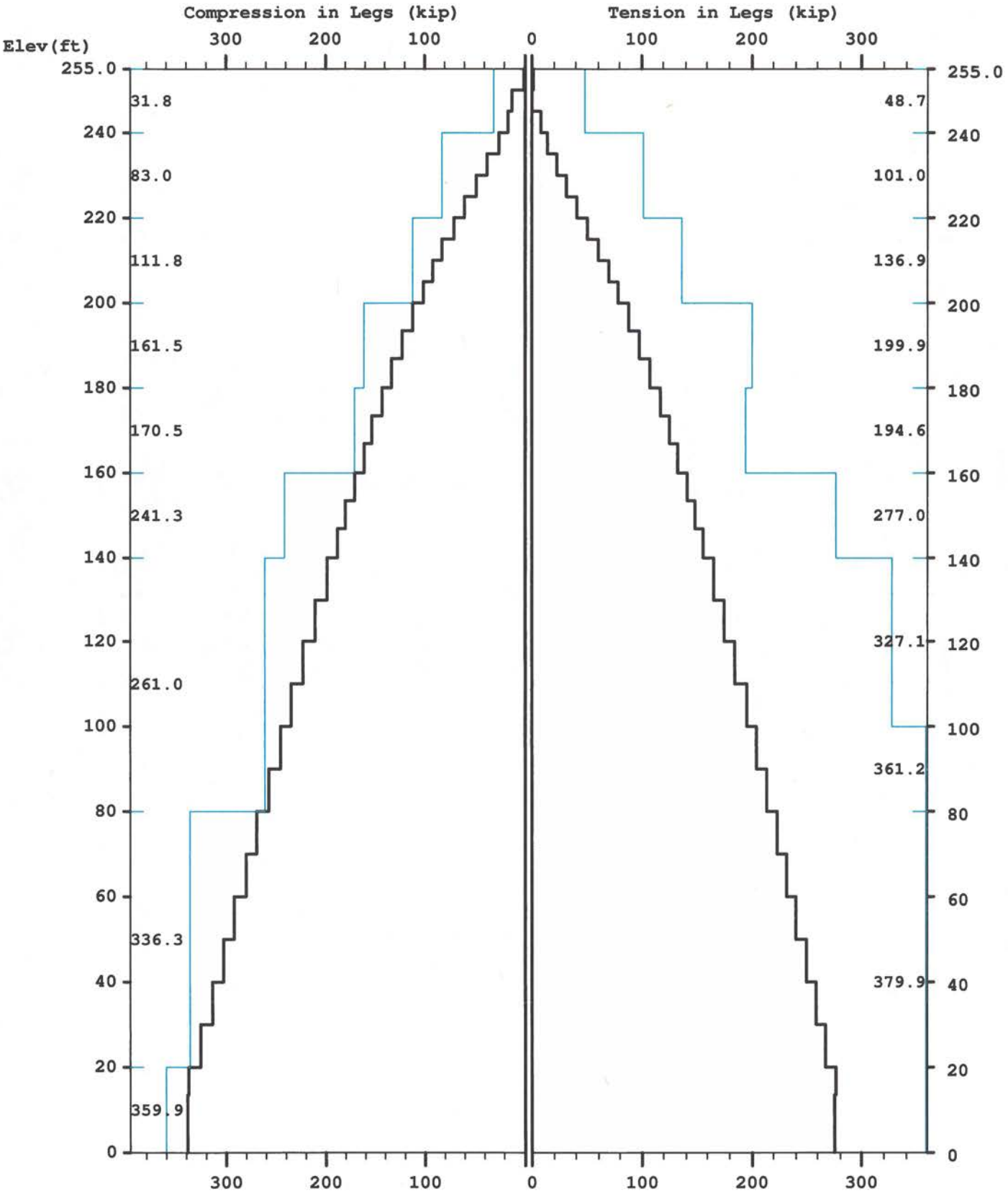
Compression in Legs (kip)
Tension in Legs (kip)
Elev(ft)
300
200
100
0
100
200
300
255.0
240
220
200
180
160
140
120
100
80
60
40
20
0
31.8
83.0
111.8
161.5
170.5
241.3
261.0
336.3
359.9
48.7
101.0
136.9
199.9
194.6
277.0
327.1
361.2
379.9

Maximum

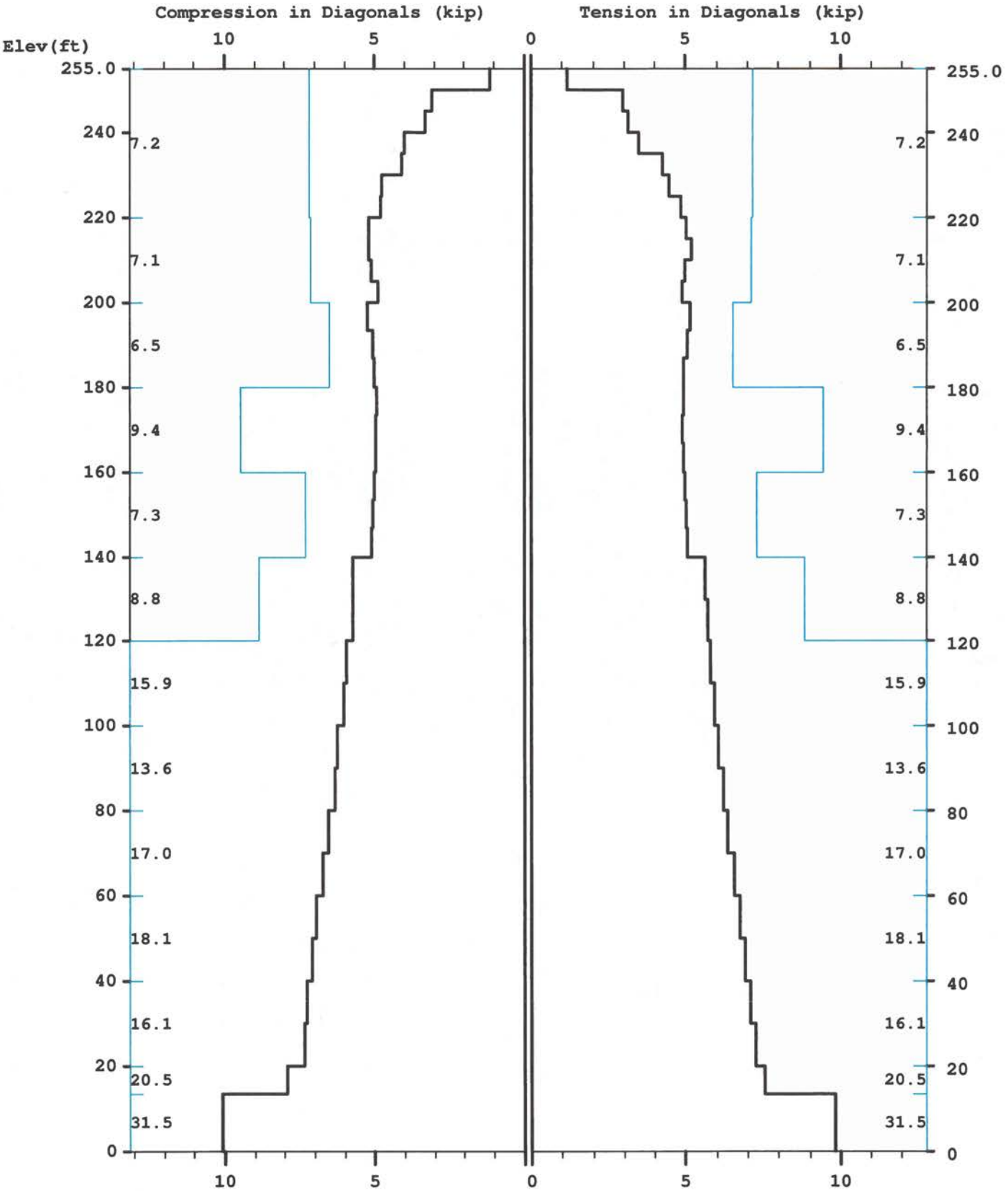
Compression in Diagonals (kip)
Tension in Diagonals (kip)
Elev(ft)
10
5
0
5
10
255.0
240
220
200
180
160
140
120
100
80
60
40
20
0
7.2
7.1
6.5
9.4
7.3
8.8
15.9
13.6
17.0
18.1
16.1
20.5
31.5

Maximum

TOTAL FOUNDATION LOADS (kip, ft-kip)

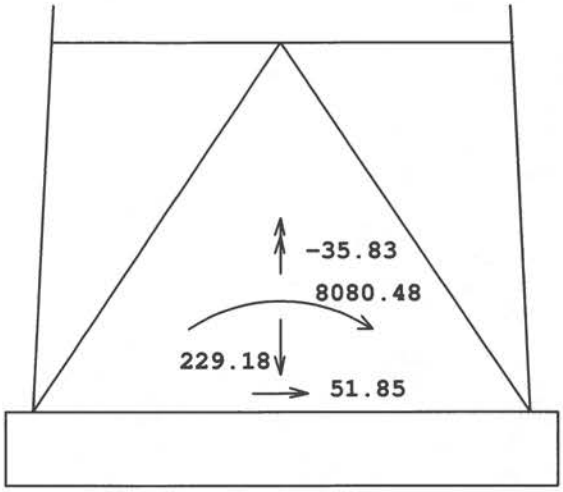

INDIVIDUAL FOOTING LOADS (kip)

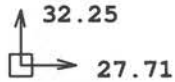

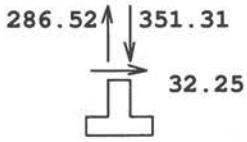

MAST GEOMETRY (ft)

PANEL TYPE	NO.OF LEGS	ELEV.AT BOTTOM	ELEV.AT TOP	F.W..AT BOTTOM	F.W..AT TOP	TYPICAL PANEL HEIGHT
X	3	250.00	255.00	5.00	5.00	5.00
X	3	240.00	250.00	5.00	5.00	5.00
X	3	235.00	240.00	5.50	5.00	5.00
X	3	220.00	235.00	7.00	5.50	5.00
X	3	200.00	220.00	9.00	7.00	5.00
X	3	180.00	200.00	11.00	9.00	6.67
X	3	160.00	180.00	13.00	11.00	6.67
X	3	140.00	160.00	15.00	13.00	6.67
X	3	120.00	140.00	17.00	15.00	10.00
X	3	100.00	120.00	19.00	17.00	10.00
X	3	80.00	100.00	21.00	19.00	10.00
X	3	60.00	80.00	23.00	21.00	10.00
X	3	40.00	60.00	25.00	23.00	10.00
X	3	20.00	40.00	27.00	25.00	10.00
V	3	13.33	20.00	27.67	27.00	6.67
A	3	0.00	13.33	29.00	27.67	13.33

MEMBER PROPERTIES

MEMBER TYPE	BOTTOM ELEV ft	TOP ELEV ft	X-SECTN AREA in.sq	RADIUS OF GYRAT in	ELASTIC MODULUS ksi	THERMAL EXPANSN /deg
LE	240.00	255.00	1.075	0.787	29000.	0.0000117
LE	220.00	240.00	2.228	0.787	29000.	0.0000117
LE	200.00	220.00	3.016	0.787	29000.	0.0000117
LE	180.00	200.00	4.407	0.787	29000.	0.0000117
LE	160.00	180.00	4.299	0.787	29000.	0.0000117
LE	140.00	160.00	6.111	0.787	29000.	0.0000117
LE	80.00	140.00	7.952	0.787	29000.	0.0000117
LE	0.00	80.00	8.399	0.787	29000.	0.0000117
DI	200.00	255.00	0.484	0.626	29000.	0.0000117
DI	180.00	200.00	0.715	0.626	29000.	0.0000117
DI	140.00	180.00	0.902	0.626	29000.	0.0000117
DI	120.00	140.00	1.090	0.626	29000.	0.0000117
DI	80.00	120.00	1.688	0.626	29000.	0.0000117
DI	13.33	80.00	1.938	0.626	29000.	0.0000117
DI	0.00	13.33	2.062	0.626	29000.	0.0000117
HO	250.00	255.00	0.484	0.626	29000.	0.0000117
HO	235.00	240.00	0.484	0.626	29000.	0.0000117
HO	0.00	13.33	1.438	0.626	29000.	0.0000117
BR	0.00	13.33	1.438	0.000	29000.	0.0000117

FACTORED MEMBER RESISTANCES

BOTTOM ELEV ft	TOP ELEV ft	LEGS COMP kip	LEGS TENS kip	DIAGONALS COMP kip	DIAGONALS TENS kip	HORIZONTALS COMP kip	HORIZONTALS TENS kip	INT BRACING COMP kip	INT BRACING TENS kip

250.0	255.0	31.84	48.70	7.16	7.16	7.16	7.16	0.00	0.00
240.0	250.0	31.84	48.70	7.16	7.16	0.00	0.00	0.00	0.00
235.0	240.0	83.04	100.98	7.16	7.16	7.16	7.16	0.00	0.00
220.0	235.0	83.04	100.98	7.16	7.16	0.00	0.00	0.00	0.00
200.0	220.0	111.82	136.93	7.13	7.13	0.00	0.00	0.00	0.00
180.0	200.0	161.47	199.92	6.51	6.51	0.00	0.00	0.00	0.00
160.0	180.0	170.46	194.59	9.45	9.45	0.00	0.00	0.00	0.00
140.0	160.0	241.28	277.05	7.32	7.32	0.00	0.00	0.00	0.00
120.0	140.0	260.96	327.10	8.84	8.84	0.00	0.00	0.00	0.00
100.0	120.0	260.96	327.10	15.88	15.88	0.00	0.00	0.00	0.00
80.0	100.0	260.96	361.16	13.59	13.59	0.00	0.00	0.00	0.00
60.0	80.0	336.31	379.88	17.02	17.02	0.00	0.00	0.00	0.00
40.0	60.0	336.31	379.88	18.13	18.13	0.00	0.00	0.00	0.00
20.0	40.0	336.31	379.88	16.06	16.06	0.00	0.00	0.00	0.00
13.3	20.0	359.86	379.88	20.48	20.48	0.00	0.00	0.00	0.00
0.0	13.3	359.86	379.88	31.46	31.46	9.52	9.52	9.39	9.39

==========
* Only 5 condition(s) shown in full
* Some wind loads may have been derived from full-scale wind tunnel testing

==========

LOADING CONDITION A ==========

105 mph wind with no ice. Wind Azimuth: 0◆ (1.2 D + 1.0 Wo)

MAST LOADING
==========

LOAD TYPE	ELEV ft	APPLY..LOAD..AT RADIUS ft	AZI	LOAD AZI	.....FORCES..... HORIZ kip	DOWN kip	.....MOMENTS..... VERTICAL ft-kip	TORSNAL ft-kip
C	250.0	0.00	0.0	0.0	5.88	14.40	0.00	0.00
C	238.0	0.00	0.0	0.0	4.14	9.60	0.00	0.00
C	228.0	0.00	0.0	0.0	2.73	4.80	0.00	0.00
C	218.0	0.00	0.0	0.0	2.02	3.60	0.00	0.00
C	6.7	8.18	180.0	0.0	0.13	0.11	0.00	0.00
D	255.0	0.00	42.1	0.0	0.05	0.04	0.01	0.00
D	250.0	0.00	42.1	0.0	0.05	0.04	0.01	0.00
D	250.0	0.00	350.6	0.0	0.09	0.06	0.05	-0.02
D	240.0	0.00	350.6	0.0	0.09	0.06	0.05	-0.02
D	240.0	0.00	1.3	0.0	0.12	0.10	0.06	-0.01
D	230.0	0.00	6.3	0.0	0.12	0.10	0.06	0.00
D	230.0	0.00	24.4	0.0	0.12	0.11	0.06	0.01
D	220.0	0.00	34.2	0.0	0.13	0.12	0.06	0.02
D	220.0	0.00	45.8	0.0	0.13	0.13	0.08	0.03
D	200.0	0.00	49.6	0.0	0.13	0.14	0.08	0.02
D	200.0	0.00	50.0	0.0	0.13	0.16	0.11	0.04
D	180.0	0.00	49.5	0.0	0.13	0.16	0.09	0.03
D	180.0	0.00	50.6	0.0	0.14	0.17	0.13	0.05
D	160.0	0.00	50.3	0.0	0.14	0.18	0.12	0.04
D	160.0	0.00	51.1	0.0	0.14	0.20	0.15	0.06
D	140.0	0.00	50.8	0.0	0.15	0.20	0.14	0.05
D	140.0	0.00	51.4	0.0	0.14	0.22	0.17	0.06
D	120.0	0.00	51.2	0.0	0.14	0.22	0.16	0.06
D	120.0	0.00	51.6	0.0	0.14	0.26	0.19	0.07
D	100.0	0.00	51.5	0.0	0.15	0.26	0.18	0.07
D	100.0	0.00	51.8	0.0	0.14	0.26	0.21	0.07
D	80.0	0.00	51.7	0.0	0.14	0.27	0.20	0.07
D	80.0	0.00	52.0	0.0	0.15	0.29	0.24	0.08
D	60.0	0.00	51.9	0.0	0.15	0.30	0.23	0.08
D	60.0	0.00	52.1	0.0	0.14	0.30	0.26	0.08
D	40.0	0.00	52.0	0.0	0.14	0.30	0.25	0.08

D	40.0	0.00	52.2	0.0	0.13	0.31	0.28	0.08
D	20.0	0.00	52.2	0.0	0.13	0.31	0.27	0.08
D	20.0	0.00	52.3	0.0	0.12	0.29	0.30	0.08
D	13.3	0.00	52.3	0.0	0.12	0.29	0.30	0.08
D	13.3	0.00	52.3	0.0	0.14	0.35	0.29	0.08
D	0.0	0.00	52.3	0.0	0.14	0.35	0.29	0.08

==========
LOADING CONDITION M ==========

105 mph wind with no ice. Wind Azimuth: 0◆ (0.9 D + 1.0 Wo)

MAST LOADING
==========

LOAD TYPE	ELEV ft	APPLY..LOAD..AT RADIUS ft	AZI	LOAD AZI	.....FORCES..... HORIZ kip	DOWN kip	.....MOMENTS..... VERTICAL ft-kip	TORSNAL ft-kip
C	250.0	0.00	0.0	0.0	5.88	10.80	0.00	0.00
C	238.0	0.00	0.0	0.0	4.14	7.20	0.00	0.00
C	228.0	0.00	0.0	0.0	2.73	3.60	0.00	0.00
C	218.0	0.00	0.0	0.0	2.02	2.70	0.00	0.00
C	6.7	8.18	180.0	0.0	0.13	0.08	0.00	0.00
D	255.0	0.00	42.1	0.0	0.05	0.03	0.01	0.00
D	250.0	0.00	42.1	0.0	0.05	0.03	0.01	0.00
D	250.0	0.00	350.6	0.0	0.09	0.05	0.04	-0.02
D	240.0	0.00	350.6	0.0	0.09	0.05	0.04	-0.02
D	240.0	0.00	1.3	0.0	0.12	0.07	0.04	-0.01
D	230.0	0.00	6.3	0.0	0.12	0.07	0.04	0.00
D	230.0	0.00	24.4	0.0	0.12	0.08	0.04	0.01
D	220.0	0.00	34.2	0.0	0.13	0.09	0.05	0.02
D	220.0	0.00	45.8	0.0	0.13	0.10	0.06	0.03
D	200.0	0.00	49.6	0.0	0.13	0.10	0.06	0.02
D	200.0	0.00	50.0	0.0	0.13	0.12	0.08	0.04
D	180.0	0.00	49.5	0.0	0.13	0.12	0.07	0.03
D	180.0	0.00	50.6	0.0	0.14	0.13	0.10	0.05
D	160.0	0.00	50.3	0.0	0.14	0.13	0.09	0.04
D	160.0	0.00	51.1	0.0	0.14	0.15	0.11	0.06
D	140.0	0.00	50.8	0.0	0.15	0.15	0.10	0.05
D	140.0	0.00	51.4	0.0	0.14	0.17	0.13	0.06
D	120.0	0.00	51.2	0.0	0.14	0.17	0.12	0.06
D	120.0	0.00	51.6	0.0	0.14	0.19	0.14	0.07
D	100.0	0.00	51.5	0.0	0.15	0.20	0.14	0.07
D	100.0	0.00	51.8	0.0	0.14	0.20	0.16	0.07
D	80.0	0.00	51.7	0.0	0.14	0.20	0.15	0.07
D	80.0	0.00	52.0	0.0	0.15	0.22	0.18	0.08
D	60.0	0.00	51.9	0.0	0.15	0.22	0.17	0.08
D	60.0	0.00	52.1	0.0	0.14	0.22	0.19	0.08
D	40.0	0.00	52.0	0.0	0.14	0.23	0.19	0.08
D	40.0	0.00	52.2	0.0	0.13	0.23	0.21	0.08
D	20.0	0.00	52.2	0.0	0.13	0.23	0.20	0.08
D	20.0	0.00	52.3	0.0	0.12	0.21	0.23	0.08
D	13.3	0.00	52.3	0.0	0.12	0.21	0.23	0.08
D	13.3	0.00	52.3	0.0	0.14	0.26	0.22	0.08
D	0.0	0.00	52.3	0.0	0.14	0.26	0.22	0.08

==========
LOADING CONDITION Y ==========

30 mph wind with 1.5 ice. Wind Azimuth: 0◆ (1.2 D + 1.0 Di + 1.0 Wi)

MAST LOADING
==========

LOAD TYPE	ELEV ft	APPLY..LOAD..AT RADIUS ft	AZI	LOAD AZI	.....FORCES..... HORIZ kip	DOWN kip	.....MOMENTS..... VERTICAL ft-kip	TORSNAL ft-kip
C	250.0	0.00	0.0	0.0	0.83	36.44	0.00	0.00
C	238.0	0.00	0.0	0.0	0.59	24.22	0.00	0.00
C	228.0	0.00	0.0	0.0	0.38	12.08	0.00	0.00
C	218.0	0.00	0.0	0.0	0.28	9.04	0.00	0.00
C	6.7	8.18	180.0	0.0	0.01	0.11	0.00	0.00
D	255.0	0.00	42.1	0.0	0.01	0.20	0.04	0.00
D	250.0	0.00	42.1	0.0	0.01	0.20	0.04	0.00
D	250.0	0.00	350.9	0.0	0.01	0.27	0.19	0.00
D	240.0	0.00	350.9	0.0	0.01	0.27	0.19	0.00
D	240.0	0.00	5.4	0.0	0.01	0.37	0.20	0.00
D	235.0	0.00	5.4	0.0	0.01	0.37	0.20	0.00
D	235.0	0.00	13.6	0.0	0.01	0.37	0.19	0.00
D	230.0	0.00	13.6	0.0	0.01	0.37	0.19	0.00
D	230.0	0.00	31.1	0.0	0.01	0.40	0.21	0.00
D	225.0	0.00	31.1	0.0	0.01	0.40	0.21	0.00
D	225.0	0.00	40.1	0.0	0.01	0.43	0.22	0.00
D	220.0	0.00	40.1	0.0	0.01	0.43	0.22	0.00
D	220.0	0.00	46.0	0.0	0.01	0.45	0.28	0.00
D	215.0	0.00	46.0	0.0	0.01	0.45	0.28	0.00
D	215.0	0.00	48.5	0.0	0.02	0.46	0.30	0.00
D	210.0	0.00	48.5	0.0	0.02	0.46	0.30	0.00
D	210.0	0.00	48.2	0.0	0.02	0.47	0.28	0.00
D	205.0	0.00	48.2	0.0	0.02	0.47	0.28	0.00
D	205.0	0.00	47.9	0.0	0.02	0.47	0.26	0.00
D	200.0	0.00	47.9	0.0	0.02	0.47	0.26	0.00
D	200.0	0.00	49.4	0.0	0.02	0.48	0.38	0.00
D	193.3	0.00	49.4	0.0	0.02	0.48	0.38	0.00
D	193.3	0.00	49.2	0.0	0.02	0.49	0.35	0.00
D	186.7	0.00	49.2	0.0	0.02	0.49	0.35	0.00
D	186.7	0.00	48.9	0.0	0.02	0.49	0.33	0.00
D	180.0	0.00	48.9	0.0	0.02	0.49	0.33	0.00
D	180.0	0.00	50.0	0.0	0.02	0.53	0.45	0.01
D	173.3	0.00	50.0	0.0	0.02	0.53	0.45	0.01
D	173.3	0.00	49.8	0.0	0.02	0.54	0.43	0.01
D	166.7	0.00	49.8	0.0	0.02	0.54	0.43	0.01
D	166.7	0.00	49.6	0.0	0.02	0.54	0.40	0.00
D	160.0	0.00	49.6	0.0	0.02	0.54	0.40	0.00
D	160.0	0.00	50.4	0.0	0.02	0.57	0.52	0.01
D	140.0	0.00	50.1	0.0	0.02	0.58	0.47	0.01
D	140.0	0.00	50.7	0.0	0.02	0.58	0.58	0.01
D	130.0	0.00	50.7	0.0	0.02	0.58	0.58	0.01
D	130.0	0.00	50.5	0.0	0.02	0.59	0.55	0.01
D	120.0	0.00	50.5	0.0	0.02	0.59	0.55	0.01
D	120.0	0.00	50.9	0.0	0.02	0.63	0.65	0.01
D	110.0	0.00	50.9	0.0	0.02	0.63	0.65	0.01
D	110.0	0.00	50.8	0.0	0.02	0.64	0.62	0.01
D	100.0	0.00	50.8	0.0	0.02	0.64	0.62	0.01
D	100.0	0.00	51.1	0.0	0.02	0.65	0.71	0.01
D	80.0	0.00	51.0	0.0	0.02	0.66	0.68	0.01
D	80.0	0.00	51.3	0.0	0.02	0.71	0.77	0.01
D	60.0	0.00	51.2	0.0	0.02	0.72	0.74	0.01
D	60.0	0.00	51.5	0.0	0.02	0.72	0.83	0.01
D	40.0	0.00	51.4	0.0	0.02	0.73	0.80	0.01
D	40.0	0.00	51.7	0.0	0.01	0.73	0.87	0.01
D	20.0	0.00	51.6	0.0	0.01	0.73	0.85	0.01
D	20.0	0.00	52.1	0.0	0.01	0.52	0.41	0.01
D	13.3	0.00	52.1	0.0	0.01	0.52	0.41	0.01
D	13.3	0.00	51.8	0.0	0.01	0.76	0.70	0.01
D	0.0	0.00	51.8	0.0	0.01	0.76	0.70	0.01

==========
LOADING CONDITION k ==========

Seismic - Azimuth: 0◆ (1.2 D + 1.0 Ev + 1.0 Eh)

MAST LOADING
==========

LOAD TYPE	ELEV ft	APPLY..LOAD..AT RADIUS ft	AZI	LOAD AZI	.....FORCES..... HORIZ kip	DOWN kip	.....MOMENTS..... VERTICAL ft-kip	TORSNAL ft-kip
C	252.5	0.00	0.0	0.0	0.00	0.02	0.00	0.00
C	250.0	0.00	0.0	0.0	1.11	14.88	0.00	0.00
C	247.5	0.00	0.0	0.0	0.05	0.69	0.00	0.00
C	245.0	0.00	0.0	0.0	0.00	0.05	0.00	0.00
C	245.0	0.00	0.0	0.0	0.02	0.28	0.00	0.00
C	239.0	0.00	0.0	0.0	0.00	0.01	0.00	0.00
C	239.0	0.00	0.0	0.0	0.00	0.06	0.00	0.00
C	238.0	0.00	0.0	0.0	0.70	9.92	0.00	0.00
C	233.0	0.00	0.0	0.0	0.01	0.13	0.00	0.00
C	233.0	0.00	0.0	0.0	0.02	0.36	0.00	0.00
C	233.0	0.00	0.0	0.0	0.00	0.05	0.00	0.00
C	230.0	0.00	0.0	0.0	0.08	1.22	0.00	0.00
C	228.0	0.00	0.0	0.0	0.33	4.96	0.00	0.00
C	224.0	0.00	0.0	0.0	0.00	0.04	0.00	0.00
C	224.0	0.00	0.0	0.0	0.01	0.23	0.00	0.00
C	224.0	0.00	0.0	0.0	0.02	0.29	0.00	0.00
C	219.0	0.00	0.0	0.0	0.00	0.07	0.00	0.00
C	219.0	0.00	0.0	0.0	0.00	0.06	0.00	0.00
C	219.0	0.00	0.0	0.0	0.00	0.01	0.00	0.00
C	218.0	0.00	0.0	0.0	0.23	3.72	0.00	0.00
C	210.0	0.00	0.0	0.0	0.09	1.56	0.00	0.00
C	209.0	0.00	0.0	0.0	0.01	0.09	0.00	0.00
C	209.0	0.00	0.0	0.0	0.04	0.65	0.00	0.00
C	209.0	0.00	0.0	0.0	0.04	0.65	0.00	0.00
C	190.0	0.00	0.0	0.0	0.04	0.72	0.00	0.00
C	190.0	0.00	0.0	0.0	0.04	0.72	0.00	0.00
C	190.0	0.00	0.0	0.0	0.11	2.17	0.00	0.00
C	190.0	0.00	0.0	0.0	0.01	0.10	0.00	0.00
C	170.0	0.00	0.0	0.0	0.00	0.10	0.00	0.00
C	170.0	0.00	0.0	0.0	0.03	0.72	0.00	0.00
C	170.0	0.00	0.0	0.0	0.03	0.72	0.00	0.00
C	170.0	0.00	0.0	0.0	0.11	2.39	0.00	0.00
C	150.0	0.00	0.0	0.0	0.00	0.10	0.00	0.00
C	150.0	0.00	0.0	0.0	0.12	3.00	0.00	0.00
C	150.0	0.00	0.0	0.0	0.03	0.72	0.00	0.00
C	150.0	0.00	0.0	0.0	0.03	0.72	0.00	0.00
C	130.0	0.00	0.0	0.0	0.11	3.43	0.00	0.00
C	130.0	0.00	0.0	0.0	0.00	0.10	0.00	0.00
C	130.0	0.00	0.0	0.0	0.02	0.72	0.00	0.00
C	130.0	0.00	0.0	0.0	0.02	0.72	0.00	0.00
C	110.0	0.00	0.0	0.0	0.02	0.72	0.00	0.00
C	110.0	0.00	0.0	0.0	0.02	0.72	0.00	0.00
C	110.0	0.00	0.0	0.0	0.11	4.16	0.00	0.00
C	110.0	0.00	0.0	0.0	0.00	0.10	0.00	0.00
C	90.0	0.00	0.0	0.0	0.00	0.10	0.00	0.00
C	90.0	0.00	0.0	0.0	0.01	0.72	0.00	0.00
C	90.0	0.00	0.0	0.0	0.01	0.72	0.00	0.00
C	90.0	0.00	0.0	0.0	0.09	4.53	0.00	0.00
C	70.0	0.00	0.0	0.0	0.01	0.72	0.00	0.00
C	70.0	0.00	0.0	0.0	0.01	0.72	0.00	0.00
C	70.0	0.00	0.0	0.0	0.08	5.07	0.00	0.00
C	70.0	0.00	0.0	0.0	0.00	0.10	0.00	0.00
C	50.0	0.00	0.0	0.0	0.00	0.10	0.00	0.00
C	50.0	0.00	0.0	0.0	0.01	0.72	0.00	0.00
C	50.0	0.00	0.0	0.0	0.01	0.72	0.00	0.00
C	50.0	0.00	0.0	0.0	0.05	5.37	0.00	0.00
C	30.0	0.00	0.0	0.0	0.00	0.72	0.00	0.00
C	30.0	0.00	0.0	0.0	0.00	0.72	0.00	0.00

C	30.0	0.00	0.0	0.0	0.03	5.56	0.00	0.00
C	30.0	0.00	0.0	0.0	0.00	0.10	0.00	0.00
C	10.0	0.00	0.0	0.0	0.00	0.10	0.00	0.00
C	10.0	0.00	0.0	0.0	0.00	0.72	0.00	0.00
C	10.0	0.00	0.0	0.0	0.00	0.72	0.00	0.00
C	10.0	0.00	0.0	0.0	0.01	6.27	0.00	0.00
C	6.7	0.00	0.0	0.0	0.00	0.12	0.00	0.00
D	255.0	0.00	180.0	180.0	0.00	0.00	0.00	0.00
D	0.0	0.00	180.0	180.0	0.00	0.00	0.00	0.00

==========

LOADING CONDITION n ==========

Seismic - Azimuth: 0◆ (0.9 D - 1.0 Ev + 1.0 Eh)

MAST LOADING
==========

LOAD TYPE	ELEV ft	APPLY..LOAD..AT RADIUS ft	AZI	LOAD AZI	.....FORCES..... HORIZ kip	DOWN kip	.....MOMENTS..... VERTICAL ft-kip	TORSNAL ft-kip
C	252.5	0.00	0.0	0.0	0.00	0.02	0.00	0.00
C	250.0	0.00	0.0	0.0	1.11	10.32	0.00	0.00
C	247.5	0.00	0.0	0.0	0.05	0.48	0.00	0.00
C	245.0	0.00	0.0	0.0	0.00	0.03	0.00	0.00
C	245.0	0.00	0.0	0.0	0.02	0.20	0.00	0.00
C	239.0	0.00	0.0	0.0	0.00	0.01	0.00	0.00
C	239.0	0.00	0.0	0.0	0.00	0.04	0.00	0.00
C	238.0	0.00	0.0	0.0	0.70	6.88	0.00	0.00
C	233.0	0.00	0.0	0.0	0.01	0.09	0.00	0.00
C	233.0	0.00	0.0	0.0	0.02	0.25	0.00	0.00
C	233.0	0.00	0.0	0.0	0.00	0.03	0.00	0.00
C	230.0	0.00	0.0	0.0	0.08	0.85	0.00	0.00
C	228.0	0.00	0.0	0.0	0.33	3.44	0.00	0.00
C	224.0	0.00	0.0	0.0	0.00	0.03	0.00	0.00
C	224.0	0.00	0.0	0.0	0.01	0.16	0.00	0.00
C	224.0	0.00	0.0	0.0	0.02	0.20	0.00	0.00
C	219.0	0.00	0.0	0.0	0.00	0.05	0.00	0.00
C	219.0	0.00	0.0	0.0	0.00	0.04	0.00	0.00
C	219.0	0.00	0.0	0.0	0.00	0.01	0.00	0.00
C	218.0	0.00	0.0	0.0	0.23	2.58	0.00	0.00
C	210.0	0.00	0.0	0.0	0.09	1.08	0.00	0.00
C	209.0	0.00	0.0	0.0	0.01	0.06	0.00	0.00
C	209.0	0.00	0.0	0.0	0.04	0.45	0.00	0.00
C	209.0	0.00	0.0	0.0	0.04	0.45	0.00	0.00
C	190.0	0.00	0.0	0.0	0.04	0.50	0.00	0.00
C	190.0	0.00	0.0	0.0	0.04	0.50	0.00	0.00
C	190.0	0.00	0.0	0.0	0.11	1.50	0.00	0.00
C	190.0	0.00	0.0	0.0	0.01	0.07	0.00	0.00
C	170.0	0.00	0.0	0.0	0.00	0.07	0.00	0.00
C	170.0	0.00	0.0	0.0	0.03	0.50	0.00	0.00
C	170.0	0.00	0.0	0.0	0.03	0.50	0.00	0.00
C	170.0	0.00	0.0	0.0	0.11	1.65	0.00	0.00
C	150.0	0.00	0.0	0.0	0.00	0.07	0.00	0.00
C	150.0	0.00	0.0	0.0	0.12	2.08	0.00	0.00
C	150.0	0.00	0.0	0.0	0.03	0.50	0.00	0.00
C	150.0	0.00	0.0	0.0	0.03	0.50	0.00	0.00
C	130.0	0.00	0.0	0.0	0.11	2.38	0.00	0.00
C	130.0	0.00	0.0	0.0	0.00	0.07	0.00	0.00
C	130.0	0.00	0.0	0.0	0.02	0.50	0.00	0.00
C	130.0	0.00	0.0	0.0	0.02	0.50	0.00	0.00
C	110.0	0.00	0.0	0.0	0.02	0.50	0.00	0.00
C	110.0	0.00	0.0	0.0	0.02	0.50	0.00	0.00
C	110.0	0.00	0.0	0.0	0.11	2.88	0.00	0.00
C	110.0	0.00	0.0	0.0	0.00	0.07	0.00	0.00

C	90.0	0.00	0.0	0.0	0.00	0.07	0.00	0.00
C	90.0	0.00	0.0	0.0	0.01	0.50	0.00	0.00
C	90.0	0.00	0.0	0.0	0.01	0.50	0.00	0.00
C	90.0	0.00	0.0	0.0	0.09	3.14	0.00	0.00
C	70.0	0.00	0.0	0.0	0.01	0.50	0.00	0.00
C	70.0	0.00	0.0	0.0	0.01	0.50	0.00	0.00
C	70.0	0.00	0.0	0.0	0.08	3.51	0.00	0.00
C	70.0	0.00	0.0	0.0	0.00	0.07	0.00	0.00
C	50.0	0.00	0.0	0.0	0.00	0.07	0.00	0.00
C	50.0	0.00	0.0	0.0	0.01	0.50	0.00	0.00
C	50.0	0.00	0.0	0.0	0.01	0.50	0.00	0.00
C	50.0	0.00	0.0	0.0	0.05	3.72	0.00	0.00
C	30.0	0.00	0.0	0.0	0.00	0.50	0.00	0.00
C	30.0	0.00	0.0	0.0	0.00	0.50	0.00	0.00
C	30.0	0.00	0.0	0.0	0.03	3.85	0.00	0.00
C	30.0	0.00	0.0	0.0	0.00	0.07	0.00	0.00
C	10.0	0.00	0.0	0.0	0.00	0.07	0.00	0.00
C	10.0	0.00	0.0	0.0	0.00	0.50	0.00	0.00
C	10.0	0.00	0.0	0.0	0.00	0.50	0.00	0.00
C	10.0	0.00	0.0	0.0	0.01	4.34	0.00	0.00
C	6.7	0.00	0.0	0.0	0.00	0.08	0.00	0.00
D	255.0	0.00	180.0	180.0	0.00	0.00	0.00	0.00
D	0.0	0.00	180.0	180.0	0.00	0.00	0.00	0.00

==========

MAXIMUM TENSION IN MAST MEMBERS (kip)

==========

ELEV ft	LEGS	DIAG	HORIZ	BRACE
255.0	----------		0.77 M	0.00 A
	0.67 S	1.18 G		
250.0	----------		0.13 G	0.00 A
	0.00 A	2.98 R		
245.0	----------		0.25 Y	0.00 A
	7.90 M	3.13 R		
240.0	----------		0.42 K	0.00 A
	14.50 M	3.47 R		
235.0	----------		0.21 Y	0.00 A
	22.78 M	4.25 L		
230.0	----------		0.04 Y	0.00 A
	31.84 M	4.48 R		
225.0	----------		0.18 A	0.00 A
	41.43 M	4.84 L		
220.0	----------		0.08 A	0.00 A
	50.88 M	5.01 R		
215.0	----------		0.12 A	0.00 A
	60.55 M	5.21 L		
210.0	----------		0.11 A	0.00 A
	70.01 M	4.98 R		
205.0	----------		0.11 A	0.00 A
	78.81 M	4.91 L		
200.0	----------		0.11 A	0.00 A
	88.26 M	5.15 R		
193.3	----------		0.13 A	0.00 A
	98.41 M	5.06 L		
186.7	----------		0.11 A	0.00 A
	107.86 M	4.93 R		
180.0	----------		0.11 A	0.00 A
	116.79 M	4.93 L		
173.3	----------		0.07 A	0.00 A
	125.29 M	4.89 F		
166.7	----------		0.10 A	0.00 A
	133.42 M	4.93 F		
160.0	----------		0.07 A	0.00 A
	141.27 M	4.96 F		
153.3	----------		0.10 A	0.00 A

	148.82 M	5.01 F		
146.7	----------		0.06 A	0.00 A
	156.20 M	5.08 F		
140.0	----------		0.09 A	0.00 A
	164.99 M	5.63 F		
130.0	----------		0.09 A	0.00 A
	175.37 M	5.70 F		
120.0	----------		0.08 A	0.00 A
	185.31 M	5.80 F		
110.0	----------		0.08 A	0.00 A
	195.04 M	5.93 F		
100.0	----------		0.07 A	0.00 A
	204.48 M	6.06 L		
90.0	----------		0.08 A	0.00 A
	213.80 M	6.21 F		
80.0	----------		0.06 A	0.00 A
	222.87 M	6.37 L		
70.0	----------		0.06 A	0.00 A
	231.84 M	6.55 F		
60.0	----------		0.06 A	0.00 A
	240.65 M	6.73 L		
50.0	----------		0.06 A	0.00 A
	249.39 M	6.89 K		
40.0	----------		0.13 k	0.00 A
	257.98 M	7.07 K		
30.0	----------		0.07 S	0.00 A
	266.45 M	7.27 K		
20.0	----------		0.15 A	0.00 A
	276.35 M	7.54 L		
13.3	----------		0.52 M	0.00 K
	275.52 M	9.83 K		
0.0	----------		0.00 A	0.00 A

MAXIMUM COMPRESSION IN MAST MEMBERS (kip)
==========

ELEV ft	LEGS	DIAG	HORIZ	BRACE
255.0	----------		-0.80 G	0.00 A
	-0.80 A	-1.12 M		
250.0	----------		-0.11 M	0.00 A
	-13.24 e	-3.05 L		
245.0	----------		-0.06 O	0.00 A
	-16.65 G	-3.28 L		
240.0	----------		-0.35 Q	0.00 A
	-26.51 G	-3.97 L		
235.0	----------		-0.07 S	0.00 A
	-38.36 G	-4.08 R		
230.0	----------		-0.01 S	0.00 A
	-48.99 G	-4.75 L		
225.0	----------		-0.09 S	0.00 A
	-60.59 G	-4.77 R		
220.0	----------		-0.04 S	0.00 A
	-71.57 G	-5.17 L		
215.0	----------		-0.06 S	0.00 A
	-82.86 G	-5.17 L		
210.0	----------		-0.07 S	0.00 A
	-92.76 G	-5.08 L		
205.0	----------		-0.07 S	0.00 A
	-102.26 G	-4.88 F		
200.0	----------		-0.07 S	0.00 A
	-112.32 G	-5.24 L		
193.3	----------		-0.08 S	0.00 A

```
          -123.47 G      -5.05 F
   186.7  ---------------------        -0.07 S       0.00 A
          -133.74 G      -5.00 L
   180.0  ---------------------        -0.08 S       0.00 A
          -143.66 G      -4.93 F
   173.3  ---------------------        -0.05 S       0.00 A
          -153.09 G      -4.95 L
   166.7  ---------------------        -0.07 S       0.00 A
          -162.22 G      -4.95 F
   160.0  ---------------------        -0.05 S       0.00 A
          -171.11 G      -5.00 L
   153.3  ---------------------        -0.07 S       0.00 A
          -179.76 G      -5.04 F
   146.7  ---------------------        -0.04 S       0.00 A
          -188.28 G      -5.09 F
   140.0  ---------------------        -0.07 S       0.00 A
          -198.50 G      -5.71 K
   130.0  ---------------------        -0.07 S       0.00 A
          -210.76 G      -5.74 F
   120.0  ---------------------        -0.06 S       0.00 A
          -222.62 G      -5.93 K
   110.0  ---------------------        -0.06 S       0.00 A
          -234.46 G      -6.01 K
   100.0  ---------------------        -0.05 S       0.00 A
          -246.01 G      -6.23 K
    90.0  ---------------------        -0.06 S       0.00 A
          -257.51 G      -6.34 K
    80.0  ---------------------        -0.05 S       0.00 A
          -268.84 G      -6.57 K
    70.0  ---------------------        -0.05 S       0.00 A
          -280.20 G      -6.72 K
    60.0  ---------------------        -0.04 S       0.00 A
          -291.41 G      -6.95 K
    50.0  ---------------------        -0.04 S       0.00 A
          -302.62 G      -7.08 K
    40.0  ---------------------        -0.02 E       0.00 A
          -313.71 G      -7.25 K
    30.0  ---------------------        -0.09 A       0.00 A
          -324.73 G      -7.35 K
    20.0  ---------------------        -0.11 S       0.00 A
          -336.88 G      -7.90 K
    13.3  ---------------------        -0.64 G       0.00 X
          -337.98 G     -10.10 K
     0.0  ---------------------         0.00 A       0.00 A
```

FORCE/RESISTANCE RATIO IN LEGS
==========

MAST ELEV ft	-- LEG COMPRESSION - MAX COMP	COMP RESIST	FORCE/ RESIST RATIO	---- LEG TENSION --- MAX TENS	TENS RESIST	FORCE/ RESIST RATIO
255.00	0.80	31.84	0.03	0.67	48.70	0.01
250.00	13.24	31.84	0.42	0.00	48.70	0.00
245.00	16.65	31.84	0.52	7.90	48.70	0.16
240.00	26.51	83.04	0.32	14.50	100.98	0.14
235.00	38.36	83.04	0.46	22.78	100.98	0.23
230.00	48.99	83.04	0.59	31.84	100.98	0.32
225.00	60.59	83.04	0.73	41.43	100.98	0.41
220.00						

	71.57	111.82	0.64	50.88	136.93	0.37
215.00						
	82.86	111.82	0.74	60.55	136.93	0.44
210.00						
	92.76	111.82	0.83	70.01	136.93	0.51
205.00						
	102.26	111.82	0.91	78.81	136.93	0.58
200.00						
	112.32	161.47	0.70	88.26	199.92	0.44
193.33						
	123.47	161.47	0.76	98.41	199.92	0.49
186.67						
	133.74	161.47	0.83	107.86	199.92	0.54
180.00						
	143.66	170.46	0.84	116.79	194.59	0.60
173.33						
	153.09	170.46	0.90	125.29	194.59	0.64
166.67						
	162.22	170.46	0.95	133.42	194.59	0.69
160.00						
	171.11	241.28	0.71	141.27	277.05	0.51
153.33						
	179.76	241.28	0.75	148.82	277.05	0.54
146.67						
	188.28	241.28	0.78	156.20	277.05	0.56
140.00						
	198.50	260.96	0.76	164.99	327.10	0.50
130.00						
	210.76	260.96	0.81	175.37	327.10	0.54
120.00						
	222.62	260.96	0.85	185.31	327.10	0.57
110.00						
	234.46	260.96	0.90	195.04	327.10	0.60
100.00						
	246.01	260.96	0.94	204.48	361.16	0.57
90.00						
	257.51	260.96	0.99	213.80	361.16	0.59
80.00						
	268.84	336.31	0.80	222.87	379.88	0.59
70.00						
	280.20	336.31	0.83	231.84	379.88	0.61
60.00						
	291.41	336.31	0.87	240.65	379.88	0.63
50.00						
	302.62	336.31	0.90	249.39	379.88	0.66
40.00						
	313.71	336.31	0.93	257.98	379.88	0.68
30.00						
	324.73	336.31	0.97	266.45	379.88	0.70
20.00						
	336.88	359.86	0.94	276.35	379.88	0.73
13.33						
	337.98	359.86	0.94	275.52	379.88	0.73
0.00						

FORCE/RESISTANCE RATIO IN DIAGONALS
==========

MAST ELEV ft	- DIAG COMPRESSION - MAX COMP	COMP RESIST	FORCE/ RESIST RATIO	--- DIAG TENSION -- MAX TENS	TENS RESIST	FORCE/ RESIST RATIO
255.00						
	1.12	7.16	0.16	1.18	7.16	0.16
250.00						
	3.05	7.16	0.43	2.98	7.16	0.42
245.00						
	3.28	7.16	0.46	3.13	7.16	0.44

240.00	3.97	7.16	0.56	3.47	7.16	0.48
235.00	4.08	7.16	0.57	4.25	7.16	0.59
230.00	4.75	7.16	0.66	4.48	7.16	0.63
225.00	4.77	7.16	0.67	4.84	7.16	0.68
220.00	5.17	7.13	0.73	5.01	7.13	0.70
215.00	5.17	7.13	0.73	5.21	7.13	0.73
210.00	5.08	7.13	0.71	4.98	7.13	0.70
205.00	4.88	7.13	0.69	4.91	7.13	0.69
200.00	5.24	6.51	0.81	5.15	6.51	0.79
193.33	5.05	6.51	0.78	5.06	6.51	0.78
186.67	5.00	6.51	0.77	4.93	6.51	0.76
180.00	4.93	9.45	0.52	4.93	9.45	0.52
173.33	4.95	9.45	0.52	4.89	9.45	0.52
166.67	4.95	9.45	0.52	4.93	9.45	0.52
160.00	5.00	7.32	0.68	4.96	7.32	0.68
153.33	5.04	7.32	0.69	5.01	7.32	0.68
146.67	5.09	7.32	0.70	5.08	7.32	0.69
140.00	5.71	8.84	0.65	5.63	8.84	0.64
130.00	5.74	8.84	0.65	5.70	8.84	0.65
120.00	5.93	15.88	0.37	5.80	15.88	0.37
110.00	6.01	15.88	0.38	5.93	15.88	0.37
100.00	6.23	13.59	0.46	6.06	13.59	0.45
90.00	6.34	13.59	0.47	6.21	13.59	0.46
80.00	6.57	17.02	0.39	6.37	17.02	0.37
70.00	6.72	17.02	0.39	6.55	17.02	0.38
60.00	6.95	18.13	0.38	6.73	18.13	0.37
50.00	7.08	18.13	0.39	6.89	18.13	0.38
40.00	7.25	16.06	0.45	7.07	16.06	0.44
30.00	7.35	16.06	0.46	7.27	16.06	0.45
20.00	7.90	20.48	0.39	7.54	20.48	0.37
13.33	10.10	31.46	0.32	9.83	31.46	0.31
0.00						

MAXIMUM INDIVIDUAL FOUNDATION LOADS: (kip)
==========

----------LOAD---COMPONENTS----------				TOTAL
NORTH	EAST	DOWN	UPLIFT	SHEAR

32.25 G 27.71 K 351.31 G -286.52 M 32.25 G

MAXIMUM TOTAL LOADS ON FOUNDATION : (kip & kip-ft)
==========

------HORIZONTAL-----			DOWN	---------OVERTURNING---------			TORSION
NORTH	EAST	TOTAL @ 0.0		NORTH	EAST	TOTAL @ 0.0	
51.9	45.2	51.9	229.2	8080.5	7214.5	8080.5	-35.8
G	J	G	h	G	J	G	F

==========

==========
Latticed Tower Analysis (Unguyed) (c)2024 Guymast Inc. 416-736-7453
Processed under license at:

Sabre Towers and Poles on: 20 may 2024 at: 12:04:06
==========

****
********** Service Load Condition **********
****

==========
* Only 1 condition(s) shown in full
* Some wind loads may have been derived from full-scale wind tunnel testing

==========
LOADING CONDITION A ==========

60 mph wind with no ice. Wind Azimuth: 0◆ (1.0 D + 1.0 Wo)

MAST LOADING
==========

LOAD TYPE	ELEV ft	APPLY..LOAD..AT RADIUS ft	AZI	LOAD AZI	.....FORCES..... HORIZ kip	DOWN kip	.....MOMENTS..... VERTICAL ft-kip	TORSNAL ft-kip
C	250.0	0.00	0.0	0.0	1.92	12.00	0.00	0.00
C	238.0	0.00	0.0	0.0	1.35	8.00	0.00	0.00
C	228.0	0.00	0.0	0.0	0.89	4.00	0.00	0.00
C	218.0	0.00	0.0	0.0	0.66	3.00	0.00	0.00
C	6.7	8.18	180.0	0.0	0.04	0.09	0.00	0.00
D	255.0	0.00	42.1	0.0	0.02	0.04	0.01	0.00
D	250.0	0.00	42.1	0.0	0.02	0.04	0.01	0.00
D	250.0	0.00	350.6	0.0	0.03	0.05	0.04	-0.01
D	240.0	0.00	350.6	0.0	0.03	0.05	0.04	-0.01
D	240.0	0.00	1.3	0.0	0.04	0.08	0.05	0.00
D	230.0	0.00	6.3	0.0	0.04	0.08	0.05	0.00
D	230.0	0.00	24.4	0.0	0.04	0.09	0.05	0.00
D	220.0	0.00	34.2	0.0	0.04	0.10	0.05	0.01
D	220.0	0.00	45.8	0.0	0.04	0.11	0.07	0.01
D	200.0	0.00	49.6	0.0	0.04	0.12	0.06	0.01
D	200.0	0.00	50.0	0.0	0.04	0.13	0.09	0.01

D	180.0	0.00	49.5	0.0	0.04	0.14	0.08	0.01
D	180.0	0.00	50.6	0.0	0.05	0.14	0.11	0.02
D	160.0	0.00	50.3	0.0	0.05	0.15	0.10	0.01
D	160.0	0.00	51.1	0.0	0.05	0.17	0.13	0.02
D	140.0	0.00	50.8	0.0	0.05	0.17	0.11	0.02
D	140.0	0.00	51.4	0.0	0.05	0.19	0.14	0.02
D	120.0	0.00	51.2	0.0	0.05	0.19	0.13	0.02
D	120.0	0.00	51.6	0.0	0.05	0.21	0.16	0.02
D	100.0	0.00	51.5	0.0	0.05	0.22	0.15	0.02
D	100.0	0.00	51.8	0.0	0.05	0.22	0.18	0.02
D	80.0	0.00	51.7	0.0	0.05	0.22	0.17	0.02
D	80.0	0.00	52.0	0.0	0.05	0.24	0.20	0.03
D	60.0	0.00	51.9	0.0	0.05	0.25	0.19	0.02
D	60.0	0.00	52.1	0.0	0.05	0.25	0.21	0.03
D	40.0	0.00	52.0	0.0	0.05	0.25	0.21	0.03
D	40.0	0.00	52.2	0.0	0.04	0.26	0.23	0.03
D	20.0	0.00	52.2	0.0	0.04	0.26	0.22	0.02
D	20.0	0.00	52.3	0.0	0.04	0.24	0.25	0.03
D	13.3	0.00	52.3	0.0	0.04	0.24	0.25	0.03
D	13.3	0.00	52.3	0.0	0.05	0.29	0.24	0.03
D	0.0	0.00	52.3	0.0	0.05	0.29	0.24	0.03

==========

MAXIMUM MAST DISPLACEMENTS:

==========

ELEV	------DEFLECTIONS (ft)-----			--TILTS (DEG)---		TWIST
ft	NORTH	EAST	DOWN	NORTH	EAST	DEG
255.0	1.030 G	0.940 J	0.024 G	0.505 G	0.467 J	-0.032 F
250.0	0.986 G	0.900 J	0.024 G	0.506 G	0.468 J	-0.032 F
245.0	0.941 G	0.858 J	0.023 G	0.502 G	0.464 J	-0.032 F
240.0	0.898 G	0.818 J	0.022 G	0.490 G	0.452 J	-0.032 F
235.0	0.854 G	0.778 J	0.022 G	0.481 G	0.444 J	-0.032 F
230.0	0.812 G	0.739 J	0.021 G	0.469 G	0.433 J	-0.031 F
225.0	0.771 G	0.700 J	0.020 G	0.454 G	0.418 J	-0.030 F
220.0	0.731 G	0.664 J	0.020 G	0.436 G	0.402 J	-0.030 F
215.0	0.692 G	0.628 J	0.019 G	0.422 G	0.388 J	-0.029 F
210.0	0.655 G	0.594 J	0.018 G	0.406 G	0.373 J	-0.027 F
205.0	0.619 G	0.561 J	0.018 G	0.389 G	0.357 J	-0.026 F
200.0	0.585 G	0.530 J	0.017 G	0.371 G	0.340 J	-0.025 F
193.3	0.542 G	0.490 J	0.016 G	0.353 G	0.323 J	-0.024 F
186.7	0.501 G	0.453 J	0.016 G	0.335 G	0.307 J	-0.022 F
180.0	0.462 G	0.417 J	0.015 G	0.317 G	0.289 J	-0.021 F
173.3	0.425 G	0.384 J	0.014 G	0.298 G	0.271 J	-0.020 F
166.7	0.391 G	0.353 J	0.013 G	0.278 G	0.253 J	-0.019 F
160.0	0.359 G	0.324 J	0.013 G	0.258 G	0.235 J	-0.018 F
153.3	0.329 G	0.296 J	0.012 G	0.244 G	0.222 J	-0.017 F
146.7	0.301 G	0.271 J	0.012 G	0.231 G	0.209 J	-0.015 F
140.0	0.273 G	0.246 J	0.011 G	0.217 G	0.196 J	-0.014 F
130.0	0.236 G	0.212 J	0.011 G	0.201 G	0.182 J	-0.013 F
120.0	0.201 G	0.181 J	0.010 G	0.185 G	0.167 J	-0.011 F
110.0	0.170 G	0.152 J	0.009 G	0.168 G	0.152 J	0.010 L
100.0	0.141 G	0.127 J	0.008 G	0.152 G	0.137 J	0.009 L
90.0	0.115 G	0.103 J	0.008 G	0.136 G	0.123 J	0.008 L
80.0	0.092 G	0.083 J	0.007 G	0.120 G	0.108 J	0.007 L
70.0	0.072 G	0.064 J	0.006 G	0.105 G	0.094 J	0.006 L
60.0	0.054 G	0.048 J	0.005 G	0.090 G	0.081 J	0.005 L
50.0	0.039 G	0.035 J	0.005 G	0.075 G	0.067 J	0.004 L
40.0	0.026 G	0.023 J	0.004 G	0.060 G	0.054 J	0.003 L
30.0	0.015 G	0.013 J	0.003 K	0.045 G	0.040 J	0.002 L
20.0	0.005 G	0.004 J	0.002 K	0.030 G	0.026 J	0.002 L
13.3	0.002 G	0.001 K	0.001 G	0.020 G	0.018 J	0.001 L
0.0	0.000 A	0.000 A	0.000 A	0.000 A	0.000 A	0.000 A

MAXIMUM TENSION IN MAST MEMBERS (kip)

==========

ELEV ft	LEGS	DIAG	HORIZ	BRACE
255.0	----------		0.24 A	0.00 A
	0.17 G	0.40 G		
250.0	----------		0.05 G	0.00 A
	0.00 A	0.96 F		
245.0	----------		0.12 I	0.00 A
	0.00 A	0.98 F		
240.0	----------		0.16 K	0.00 A
	0.87 A	0.98 F		
235.0	----------		0.10 A	0.00 A
	2.45 A	1.45 L		
230.0	----------		0.02 A	0.00 A
	4.94 A	1.38 F		
225.0	----------		0.09 A	0.00 A
	7.47 A	1.61 L		
220.0	----------		0.03 A	0.00 A
	10.12 A	1.59 F		
215.0	----------		0.06 A	0.00 A
	12.81 A	1.72 L		
210.0	----------		0.05 A	0.00 A
	15.83 A	1.61 F		
205.0	----------		0.05 A	0.00 A
	18.55 A	1.62 L		
200.0	----------		0.05 A	0.00 A
	21.52 A	1.67 F		
193.3	----------		0.05 A	0.00 A
	24.63 A	1.66 F		
186.7	----------		0.04 A	0.00 A
	27.55 A	1.60 F		
180.0	----------		0.05 A	0.00 A
	30.25 A	1.63 F		
173.3	----------		0.03 A	0.00 A
	32.85 A	1.60 F		
166.7	----------		0.04 A	0.00 A
	35.29 A	1.62 F		
160.0	----------		0.03 A	0.00 A
	37.65 A	1.64 F		
153.3	----------		0.04 A	0.00 A
	39.89 A	1.65 F		
146.7	----------		0.02 A	0.00 A
	42.07 A	1.68 L		
140.0	----------		0.04 A	0.00 A
	44.66 A	1.86 F		
130.0	----------		0.04 A	0.00 A
	47.67 A	1.89 L		
120.0	----------		0.03 A	0.00 A
	50.51 A	1.92 F		
110.0	----------		0.03 A	0.00 A
	53.24 A	1.96 F		
100.0	----------		0.03 A	0.00 A
	55.88 A	2.01 F		
90.0	----------		0.03 A	0.00 A
	58.47 A	2.06 F		
80.0	----------		0.03 A	0.00 A
	60.95 A	2.12 F		
70.0	----------		0.03 A	0.00 A
	63.39 A	2.18 F		
60.0	----------		0.02 A	0.00 A
	65.77 A	2.25 F		
50.0	----------		0.02 A	0.00 A
	68.13 A	2.31 F		
40.0	----------		0.01 K	0.00 A
	70.43 A	2.38 F		
30.0	----------		0.01 G	0.00 A
	72.69 A	2.45 K		
20.0	----------		0.06 A	0.00 A
	75.57 A	2.53 F		

```
 13.3 ---------------------          0.15 A       0.00 G
          74.65 A       3.30 F
  0.0 ---------------------          0.00 A       0.00 A
```

MAXIMUM COMPRESSION IN MAST MEMBERS (kip)
==========

```
 ELEV      LEGS          DIAG        HORIZ        BRACE
   ft

255.0 ---------------------         -0.27 G       0.00 A
          -0.30 A      -0.35 A
250.0 ---------------------         -0.03 A       0.00 A
          -5.27 G      -1.03 F
245.0 ---------------------          0.00 A       0.00 A
          -7.98 G      -1.13 L
240.0 ---------------------         -0.09 E       0.00 A
         -12.13 G      -1.45 L
235.0 ---------------------          0.00 A       0.00 A
         -17.02 G      -1.29 F
230.0 ---------------------          0.00 A       0.00 A
         -20.93 G      -1.63 L
225.0 ---------------------          0.00 A       0.00 A
         -25.27 G      -1.55 F
220.0 ---------------------          0.00 G       0.00 A
         -29.27 G      -1.75 L
215.0 ---------------------          0.00 G       0.00 A
         -33.40 G      -1.69 F
210.0 ---------------------         -0.01 G       0.00 A
         -36.72 G      -1.69 L
205.0 ---------------------         -0.01 G       0.00 A
         -39.99 G      -1.60 F
200.0 ---------------------         -0.01 G       0.00 A
         -43.41 G      -1.75 F
193.3 ---------------------         -0.01 G       0.00 A
         -47.29 G      -1.66 F
186.7 ---------------------         -0.01 G       0.00 A
         -50.83 G      -1.66 L
180.0 ---------------------         -0.01 G       0.00 A
         -54.30 G      -1.63 F
173.3 ---------------------         -0.01 G       0.00 A
         -57.60 G      -1.65 F
166.7 ---------------------         -0.01 G       0.00 A
         -60.81 G      -1.64 F
160.0 ---------------------         -0.01 G       0.00 A
         -63.96 G      -1.67 L
153.3 ---------------------         -0.01 G       0.00 A
         -67.05 G      -1.68 F
146.7 ---------------------         -0.01 G       0.00 A
         -70.10 G      -1.69 F
140.0 ---------------------         -0.01 G       0.00 A
         -73.78 G      -1.91 K
130.0 ---------------------         -0.01 G       0.00 A
         -78.23 G      -1.91 F
120.0 ---------------------         -0.01 G       0.00 A
         -82.56 G      -1.99 K
110.0 ---------------------         -0.01 G       0.00 A
         -86.94 G      -2.00 K
100.0 ---------------------         -0.01 G       0.00 A
         -91.21 G      -2.09 K
 90.0 ---------------------         -0.01 G       0.00 A
         -95.49 G      -2.11 K
 80.0 ---------------------         -0.01 G       0.00 A
         -99.72 G      -2.21 K
```

```
 70.0  ---------------------        -0.01 G       0.00 A
        -104.01 G      -2.25 K
 60.0  ---------------------        -0.01 G       0.00 A
        -108.25 G      -2.35 K
 50.0  ---------------------        -0.01 G       0.00 A
        -112.52 G      -2.38 K
 40.0  ---------------------        -0.01 E       0.00 A
        -116.76 G      -2.45 K
 30.0  ---------------------        -0.04 A       0.00 A
        -120.99 G      -2.47 K
 20.0  ---------------------        -0.02 G       0.00 A
        -125.48 G      -2.69 K
 13.3  ---------------------        -0.23 G       0.00 F
        -126.40 G      -3.42 K
  0.0  ---------------------         0.00 A       0.00 A


MAXIMUM INDIVIDUAL FOUNDATION LOADS: (kip)
==========================================

    --------------LOAD---COMPONENTS-------------        TOTAL
    NORTH         EAST         DOWN       UPLIFT        SHEAR

    11.57 G       9.95 K     131.29 G     -77.93 A      11.57 G


MAXIMUM TOTAL LOADS ON FOUNDATION : (kip & kip-ft)
==================================================

  ------HORIZONTAL-----    DOWN       ---------OVERTURNING--------- TORSION
  NORTH    EAST   TOTAL               NORTH        EAST        TOTAL
                @   0.0                                        @   0.0

   17.2    15.0    17.2    73.9      2678.6      2396.5      2678.6    11.7
     G       J       G       K           G           J           G       L


==============================================================================
```

Seismic Load Effects
Equivalent Lateral Force Procedure
ANSI/TIA-222-H

Parameters	
Risk Category	II
R	3.000
S_S	0.189
S_1	0.098
Site Class	D (default)
T_L (sec)	12.000
F_a	1.600
F_v	2.400
S_{MS}	0.302
S_{M1}	0.235
S_{DS}	0.202
S_{D1}	0.157
T_s	0.777
I_e	1.000
Ω	1.500
C_S	0.051
h (ft)	255.00
K_f	4,540
W_a (ft)	16.29
W_o (ft)	29.00
W (kips)	78.528
W_1 (kips)	36.558
W_2 (kips)	12.788
f_1 (Hertz)	0.979
T (sec)	1.022
k_e	1.2610
V_s (kips)	4.005
Seismic Design Category	C

Vertical Distribution of Seismic Forces

Description	h_i (ft.)	w_i (kips)	W_2 (kips)	$w_i h_i^{ke}$	F_{sz} or E_h (kips)	E_v (kips)	1.2 D + 1.0 E_v (kips)	0.9 D - 1.0 E_v (kips)
Ladder	252.50	0.0200	0.0510	21.3935	0.0019	0.0008	0.0248	0.0172
Antenna Load	250.00	12.0000	12.0000	12,676.0399	1.1135	0.4848	14.8848	10.3152
Structure - Section 1	247.50	0.5530	0.4701	576.7976	0.0507	0.0223	0.6859	0.4754
Ladder	245.00	0.0400	0.0400	41.1906	0.0036	0.0016	0.0496	0.0344
Ladder/Line	245.00	0.2272	0.2272	233.9628	0.0206	0.0092	0.2818	0.1953
Ladder	239.00	0.0080	0.0000	7.9845	0.0007	0.0003	0.0099	0.0069
Ladder/Line	239.00	0.0454	0.0000	45.3122	0.0040	0.0018	0.0563	0.0391
Antenna Load	238.00	8.0000	0.0000	7,942.4324	0.6977	0.3232	9.9232	6.8768
Ladder	233.00	0.0400	0.0000	38.6630	0.0034	0.0016	0.0496	0.0344
Ladder/Line	233.00	0.1024	0.0000	98.9773	0.0087	0.0041	0.1270	0.0881
Ladder/Line	233.00	0.2896	0.0000	279.9203	0.0246	0.0117	0.3592	0.2489
Structure - Section 2	230.00	0.9870	0.0000	938.5468	0.0824	0.0399	1.2243	0.8484
Antenna Load	228.00	4.0000	0.0000	3,761.9744	0.3305	0.1616	4.9616	3.4384
Ladder	224.00	0.0320	0.0000	29.4315	0.0026	0.0013	0.0397	0.0275
Ladder/Line	224.00	0.1818	0.0000	167.2078	0.0147	0.0073	0.2255	0.1563
Ladder/Line	224.00	0.2317	0.0000	213.1026	0.0187	0.0094	0.2874	0.1991
Ladder	219.00	0.0080	0.0000	7.1514	0.0006	0.0003	0.0099	0.0069
Ladder/Line	219.00	0.0579	0.0000	51.7581	0.0045	0.0023	0.0718	0.0498
Ladder/Line	219.00	0.0454	0.0000	40.5841	0.0036	0.0018	0.0563	0.0391
Antenna Load	218.00	3.0000	0.0000	2,666.3361	0.2342	0.1212	3.7212	2.5788
Structure - Section 3	210.00	1.2560	0.0000	1,064.8984	0.0935	0.0507	1.5579	1.0797
Ladder	209.00	0.0720	0.0000	60.6788	0.0053	0.0029	0.0893	0.0619
Ladder/Line	209.00	0.5213	0.0000	439.3313	0.0386	0.0211	0.6467	0.4481
Ladder/Line	209.00	0.5213	0.0000	439.3313	0.0386	0.0211	0.6467	0.4481
Ladder	190.00	0.0800	0.0000	59.7858	0.0053	0.0032	0.0992	0.0688
Ladder/Line	190.00	0.5792	0.0000	432.8494	0.0380	0.0234	0.7184	0.4979
Ladder/Line	190.00	0.5792	0.0000	432.8494	0.0380	0.0234	0.7184	0.4979
Structure - Section 4	190.00	1.7490	0.0000	1,307.0678	0.1148	0.0707	2.1695	1.5034
Ladder	170.00	0.0800	0.0000	51.9620	0.0046	0.0032	0.0992	0.0688
Ladder/Line	170.00	0.5792	0.0000	376.2051	0.0330	0.0234	0.7184	0.4979
Ladder/Line	170.00	0.5792	0.0000	376.2051	0.0330	0.0234	0.7184	0.4979
Structure - Section 5	170.00	1.9250	0.0000	1,250.3363	0.1098	0.0778	2.3878	1.6547
Ladder	150.00	0.0800	0.0000	44.3753	0.0039	0.0032	0.0992	0.0688
Ladder/Line	150.00	0.5792	0.0000	321.2770	0.0282	0.0234	0.7184	0.4979
Ladder/Line	150.00	0.5792	0.0000	321.2770	0.0282	0.0234	0.7184	0.4979
Structure - Section 6	150.00	2.4170	0.0000	1,340.6880	0.1178	0.0976	2.9980	2.0777
Ladder	130.00	0.0800	0.0000	37.0487	0.0033	0.0032	0.0992	0.0688
Ladder/Line	130.00	0.5792	0.0000	268.2323	0.0236	0.0234	0.7184	0.4979

Seismic Load Effects
Equivalent Lateral Force Procedure
ANSI/TIA-222-H

Vertical Distribution of Seismic Forces

Description	h_i (ft.)	w_i (kips)	W_2 (kips)	$w_i h_i^{ke}$	F_{ev} or E_h (kips)	E_v (kips)	1.2 D + 1.0 E_v (kips)	0.9 D - 1.0 E_v (kips)
Ladder/Line	130.00	0.5792	0.0000	268.2323	0.0236	0.0234	0.7184	0.4979
Structure - Section 7	130.00	2.7630	0.0000	1,279.5682	0.1124	0.1116	3.4272	2.3751
Ladder	110.00	0.0800	0.0000	30.0114	0.0026	0.0032	0.0992	0.0688
Ladder/Line	110.00	0.5792	0.0000	217.2825	0.0191	0.0234	0.7184	0.4979
Ladder/Line	110.00	0.5792	0.0000	217.2825	0.0191	0.0234	0.7184	0.4979
Structure - Section 8	110.00	3.3510	0.0000	1,257.1023	0.1104	0.1354	4.1566	2.8805
Ladder	90.00	0.0800	0.0000	23.3018	0.0020	0.0032	0.0992	0.0688
Ladder/Line	90.00	0.5792	0.0000	168.7052	0.0148	0.0234	0.7184	0.4979
Ladder/Line	90.00	0.5792	0.0000	168.7052	0.0148	0.0234	0.7184	0.4979
Structure - Section 9	90.00	3.6520	0.0000	1,063.7280	0.0934	0.1475	4.5299	3.1393
Ladder	70.00	0.0800	0.0000	16.9730	0.0015	0.0032	0.0992	0.0688
Ladder/Line	70.00	0.5792	0.0000	122.8845	0.0108	0.0234	0.7184	0.4979
Ladder/Line	70.00	0.5792	0.0000	122.8845	0.0108	0.0234	0.7184	0.4979
Structure - Section 10	70.00	4.0890	0.0000	867.5325	0.0762	0.1652	5.0720	3.5149
Ladder	50.00	0.0800	0.0000	11.1043	0.0010	0.0032	0.0992	0.0688
Ladder/Line	50.00	0.5792	0.0000	80.3951	0.0071	0.0234	0.7184	0.4979
Ladder/Line	50.00	0.5792	0.0000	80.3951	0.0071	0.0234	0.7184	0.4979
Structure - Section 11	50.00	4.3290	0.0000	600.8814	0.0528	0.1749	5.3697	3.7212
Ladder	30.00	0.0800	0.0000	5.8310	0.0005	0.0032	0.0992	0.0688
Ladder/Line	30.00	0.5792	0.0000	42.2161	0.0037	0.0234	0.7184	0.4979
Ladder/Line	30.00	0.5792	0.0000	42.2161	0.0037	0.0234	0.7184	0.4979
Structure - Section 12	30.00	4.4820	0.0000	326.6794	0.0287	0.1811	5.5595	3.8527
Ladder	10.00	0.0800	0.0000	1.4591	0.0001	0.0032	0.0992	0.0688
Ladder/Line	10.00	0.5792	0.0000	10.5640	0.0009	0.0234	0.7184	0.4979
Ladder/Line	10.00	0.5792	0.0000	10.5640	0.0009	0.0234	0.7184	0.4979
Structure - Section 13	10.00	5.0530	0.0000	92.1614	0.0081	0.2041	6.2677	4.3436
Climbing Ladder Support Angle	6.67	0.0943	0.0000	1.0315	0.0001	0.0038	0.1170	0.0811
	Σ	78.53	12.7883	45,592.86	4.00	3.17	97.41	67.50

Leg Connection Details												
Bottom Elevation (ft)	Top Elevation (ft)	Pipe Dimensions	Top Splice					Bottom Splice/Base				
			Bolt Qty.	Bolt Dia. (in)	Bolt Circle (in)	Plate Thickness (in)	Plate Dia. (in)	Bolt Qty.	Bolt Dia. (in)	Bolt Circle (in)	Plate Thickness (in)	Plate Dia. (in)
240	255	2.375 OD X .154						6	0.75	6.50	0.75	8.50
220	240	3.500 OD X .216	6	0.75	6.50	1.00	8.50	6	0.75	6.50	1.00	8.50
200	220	3.500 OD X .300	6	0.75	6.50	1.00	8.50	6	1.00	9.00	1.25	11.50
180	200	4.500 OD X .337	6	1.00	9.00	1.25	11.50	6	1.00	9.00	1.25	11.50
160	180	5.563 OD X .258	6	1.00	9.00	1.25	11.50	6	1.00	9.00	1.25	11.50
140	160	5.563 OD X .375	6	1.00	9.00	1.25	11.50	6	1.00	9.00	1.25	11.50
120	140	5.563 OD X .500	6	1.00	9.00	1.25	11.50	6	1.00	9.00	1.25	11.50
100	120	5.563 OD X .500	6	1.00	9.00	1.25	11.50	6	1.00	9.00	1.25	11.50
80	100	5.563 OD X .500	6	1.00	9.00	1.25	11.50	6	1.25	12.50	1.75	15.75
60	80	8.625 OD X .322	6	1.25	12.50	1.50	15.75	6	1.25	12.50	1.50	15.75
40	60	8.625 OD X .322	6	1.25	12.50	1.50	15.75	6	1.25	12.50	1.50	15.75
20	40	8.625 OD X .322	6	1.25	12.50	1.50	15.75	6	1.25	12.50	1.50	15.75
0	20	8.625 OD X .322	6	1.25	12.50	1.50	15.75	6	1.25	12.75	1.50	16.00

Diagonal Bracing Connection Details								
Bottom Elevation (ft)	Top Elevation (ft)	Angle Shape	Bolt Qty.	Bolt Dia. (in)	Bolt End Distance (in)	Bolt Spacing (in)	Gage Distance From Heel (in)	Gusset Plate Thickness (in)
240	255	L 2 X 2 X 1/8	1	0.625	1.500		1.125	0.375
220	240	L 2 X 2 X 1/8	1	0.625	1.500		1.125	0.375
200	220	L 2 X 2 X 1/8	1	0.625	1.500		1.125	0.375
180	200	L 2 X 2 X 3/16	1	0.625	1.500		1.125	0.375
160	180	L 2 1/2 X 2 1/2 X 3/16	1	0.625	1.500		1.375	0.375
140	160	L 2 1/2 X 2 1/2 X 3/16	1	0.750	1.500		1.375	0.375
120	140	L 3 X 3 X 3/16	1	0.750	1.625		1.750	0.375
100	120	L 3 1/2 X 3 1/2 X 1/4	1	0.750	1.625		1.750	0.375
80	100	L 3 1/2 X 3 1/2 X 1/4	1	0.750	1.625		1.750	0.375
60	80	L 4 X 4 X 1/4	1	0.750	1.625		2.000	0.375
40	60	L 4 X 4 X 1/4	2	0.625	1.625	2.1250	2.000	0.500
20	40	L 4 X 4 X 1/4	2	0.625	1.625	2.1250	2.000	0.500
13.33	20	L 4 X 4 X 1/4	2	0.750	1.625	2.6875	2.000	0.500
0	13.33	L 5 X 3 1/2 X 1/4	2	0.750	1.625	2.6250	1.750	0.500

MAT FOUNDATION DESIGN BY SABRE INDUSTRIES

255' S3TL Series HD1 TOWERCOM VI-B, LLC CK Agee Ridge, KY (543014) 2024-05-20 KJT

Overall Loads:			
Factored Moment (ft-kips)	8080.48		
Factored Axial (kips)	229.18		
Factored Shear (kips)	51.85		
Individual Leg Loads:		Tower eccentric from mat (ft)=	2.25
Factored Uplift (kips)	287.00		
Factored Download (kips)	351.00		
Factored Shear (kips)	32.00		
Width of Tower (ft)	29	Allowable Bearing Pressure (ksf)	5.45
Ultimate Bearing Pressure	10.90	Safety Factor	2.00
Bearing Φs	0.75		
Bearing Design Strength (ksf)	8.175	Max. Factored Net Bearing Pressure (ksf)	1.60
Water Table Below Grade (ft)	999		
Width of Mat (ft)	34.5	Minimum Mat Width (ft)	34.33
Thickness of Mat (ft)	1.5		
Depth to Bottom of Slab (ft)	5.5		
Bolt Circle Diameter (in)	12.75		
Effective Anchor Bolt Embedment	52.125		
Diameter of Pier (ft)	3	Minimum Pier Diameter (ft)	2.40
Ht. of Pier Above Ground (ft)	0.5	Equivalent Square b (ft)	2.66
Ht. of Pier Below Ground (ft)	4		
Quantity of Bars in Mat	67		
Bar Diameter in Mat (in)	0.75		
Area of Bars in Mat (in^2)	29.60		
Spacing of Bars in Mat (in)	6.17	Recommended Spacing (in)	6 to 12
Quantity of Bars Pier	16		
Bar Diameter in Pier (in)	0.875		
Tie Bar Diameter in Pier (in)	0.5		
Spacing of Ties (in)	4		
Area of Bars in Pier (in2)	9.62	Minimum Pier A_s (in^2)	5.09
Spacing of Bars in Pier (in)	5.49	Recommended Spacing (in)	5 to 12
f'c (ksi)	4.5		
fy (ksi)	60		
Unit Wt. of Soil (kcf)	0.12		
Unit Wt. of Concrete (kcf)	0.15		
Volume of Concrete (yd^3)	69.66		

MAT FOUNDATION DESIGN BY SABRE INDUSTRIES (CONTINUED)

Two-Way Shear:

Average d (in)	14.25		
ϕv_c (ksi)	0.201	v_u (ksi)	0.139
$\phi v_c = \phi(2 + 4/\beta_c)f'_c{}^{1/2}$	0.302		
$\phi v_c = \phi(\alpha_s d/b_o+2)f'_c{}^{1/2}$	0.256		
$\phi v_c = \phi 4f'_c{}^{1/2}$	0.201		
Shear perimeter, b_o (in)	184.62		
β_c	1		

Stability:

Overturning Design Strength (ft-k)	14025.2	Factored Overturning Moment (ft-k)	8391.6

One-Way Shear:

ϕV_c (kips)	593.6	V_u (kips)	277.2

Pier Design:

Design Tensile Strength (kips)	519.5	Tu (kips)	287.0

Shear:

ϕ	0.75		
V_c (kips)	60.7		
V_s (kips)	169.6	$V_{s,max}$ (kips)	556.4
ϕV_n (kips)	172.7	V_u (kips)	32.0
Maximum Spacing (in)	13.01	(Only if Shear Ties are Required)	
Actual Hook Development (in)	13.50	Req'd Hook Development l_{dh} (in) - Tension	10.96
		Req'd Hook Development l_{dc} (in) - Compression	11.81

Anchor Bolt Pull-Out:

$N_{ua} / \phi N_n$	0.66	$V_{ua} / \phi V_n$	0.14
Pier Rebar Development Length (in)	43.74	Required Length of Development (in)	23.48

Flexure in Slab:

ϕM_n (ft-kips)	1823.4	M_u (ft-kips)	1811.4
a (in)	1.12		
Steel Ratio	0.00502		
β_1	0.825		
Maximum Steel Ratio (ρ_t)	0.0197		
Minimum Steel Ratio	0.0018		

Condition	1 is OK, 0 Fails
Minimum Mat Width	1
Maximum Soil Bearing Pressure	1
Pier Area of Steel	1
Pier Shear	1
Two-Way Shear	1
Overturning	1
Anchor Bolt Pull-Out	1
Flexure	1
Steel Ratio	1
Interaction Diagram	1
One-Way Shear	1
Hook Development	1
Minimum Mat Depth	1
Anchor Bolt Punching Shear	1

DRILLED STRAIGHT PIER DESIGN BY SABRE INDUSTRIES

255' S3TL Series HD1 TOWERCOM VI-B, LLC CK Agee Ridge, KY (543014) 2024-05-20 KJT

Factored Uplift (kips)	287
Factored Download (kips)	351
Factored Shear (kips)	32
Ultimate Bearing Pressure	89.65
Bearing ϕ_s	0.75
Bearing Design Strength (ksf)	67.2375
Water Table Below Grade (ft)	999
Bolt Circle Diameter (in)	12.75
Effective Anchor Bolt Embedment	52.125
Pier Diameter (ft)	4.5
Ht. Above Ground (ft)	0.5
Pier Length Below Ground (ft)	17
Quantity of Bars	14
Bar Diameter (in)	1.128
Area of Bars (in^2)	13.99
Spacing of Bars (in)	10.21
Tie Bar Diameter (in)	0.5
Spacing of Ties (in)	12
f'_c (ksi)	4.5
f_y (ksi)	60
Unit Wt. of Concrete (kcf)	0.15
Volume of Concrete (yd^3)	10.31

Minimum Pier Diameter (ft)	2.40
Minimum Area of Steel (in^2)	11.45

Ignore bottom length in download? ☐

Length to ignore download (ft): 0

Depth at Bottom of Layer (ft)	Ult. Skin Friction (ksf)	(Ult. Skin Friction)*(Uplift Factor)	γ (kcf)
3	0.00	0.00	0.12
4	0.82	0.82	0.12
6	0.93	0.93	0.12
9	1.26	1.26	0.12
11.8	0.99	0.99	0.12
17	4.00	3.00	0.12

DRILLED STRAIGHT PIER DESIGN BY SABRE INDUSTRIES (CONTINUED)

Download:			
Φ_s, Download Friction	0.75		
Q_f, Skin Friction (kips)	424.6	W_s (kips)	32.4
Q_b, End Bearing Strength (kips)	1425.8	W_c (kips)	41.7
Download Design Strength (kips)	1387.8	Factored Net Download (kips)	362.2
Uplift (skin friction):			
Φ_s, Uplift (friction)	0.75		
Q_f, Skin Friction (kips)	351.1		
W_c (kips)	41.7		
W_w (kips)	0.0		
Uplift Design Strength (kips)	300.9	Factored Uplift (kips)	287.0
Uplift (cone):			
Φ_s, Uplift (cone)	0.75		
$W_{s,cone}$ (kips)	347.3		
$W_{w,cone}$ (kips)	0.0		
W_c (kips)	41.7		
$W_{w,cyl}$ (kips)	0.0		
Uplift Design Strength (kips)	298.1	Factored Uplift (kips)	287.0
Tension:			
Design Tensile Strength (kips)	755.5	T_u (kips)	287.0
Shear:			
ϕ	0.75		
V_c (kips)	234.5		
V_s (kips)	84.8	$V_{s,max}$ (kips)	1251.9
ϕV_n (kips)	239.5	V_u (kips)	32.0
Anchor Bolt Pull-Out:			
$N_{ua} / \phi N_n$	0.61	$V_{ua} / \phi V_n$	0.14
Rebar Development Length (in)	37.53	Required Length of Development (in)	30.27

Condition	1 is OK, 0 Fails
Download	1
Uplift	1
Area of Steel	1
Shear	1
Anchor Bolt Pull-Out	1
Interaction Diagram	1

CELLCO PARTNERSHIP
D/B/A

verizon

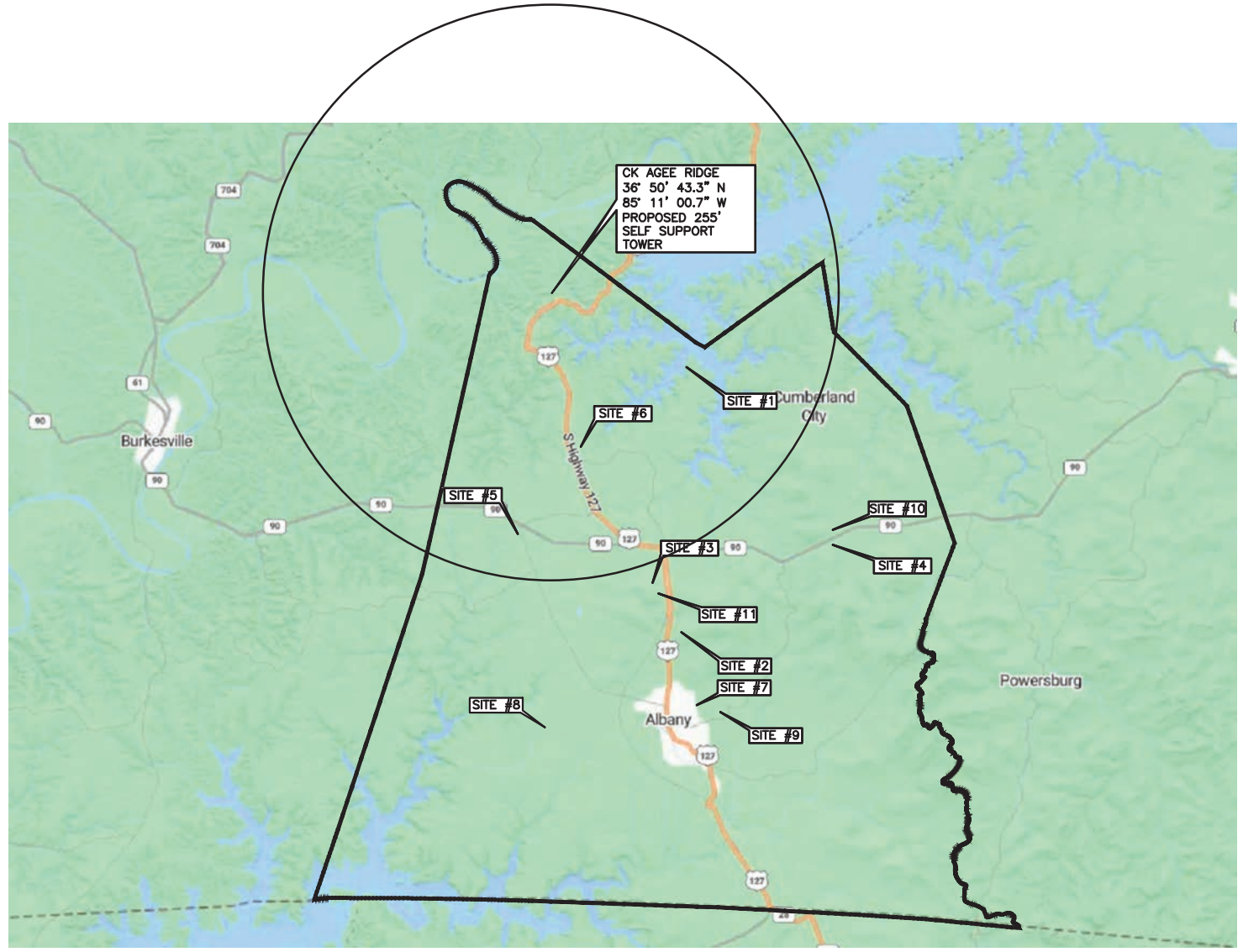

MAP NOT TO SCALE

CITY OF ALBANY
CLINTON COUNTY, KENTUCKY
VERIZON WIRELESS SITE
CK AGEE RIDGE
TOWER LOCATION EXHIBIT

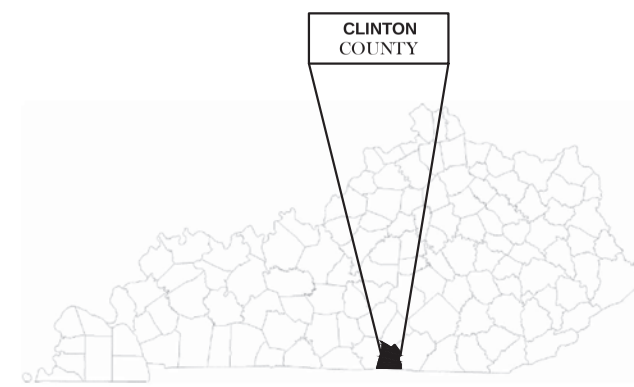

KENTUCKY

SITE#1: FCC# 1063507, GLOBAL TOWER, LLC. THROUGH AMERICAN TOWERS, LLC 36° 48' 41.0"N, 085° 07' 47.0"W

SITE#2: FCC# 1239784, CELLCO PARTNERSHIP 36° 43' 21.4"N, 085° 07' 37.2"W

SITE#3: FCC# 1258265, SBA TOWERS VII, LLC 36° 44' 36.2"N, 085° 08' 34.1"W

SITE#4: FCC# 1258266, SBA TOWERS II LLC 36° 45' 21.5" N, 085° 03' 35.7"W

SITE#5: FCC# 1258453, CELLCO PARTNERSHIP 36° 45' 30.5"N, 085° 12' 09.6"W

SITE#6: FCC# 1265526, SOUTH KENTUCKY RURAL ELECTRIC COOPERATIVE CORPORATION 36° 47' 12.7"N, 085° 10' 31.1"W

SITE#7: FCC# 1273817, AMERICAN TOWERS LLC 36° 41' 51.7"N, 085° 07' 19.1"W

SITE#8: FCC# 1291700, CELLCO PARTNERSHIP 36° 40' 59.7"N, 085° 10' 55.2"W

SITE#9: FCC# 1311145, CELLCO PARTNERSHIP 36° 41' 34.4"N, 085° 06' 52.9"W

SITE#10: FCC# 1321412, HARMONI TOWERS, LLC 36° 45' 38.2"N, 085° 03' 32.6"W

SITE#11: FCC# 1322513, HARMONI TOWERS, LLC 36° 44' 26.3"N, 085° 08' 17.5"W

TOWERCOM

241 ATLANTIC BLVD, STE 201
NEPTUNE BEACH, FL 32266

LAB

49030 Pontiac Trail, Suite 100
Wixom, Michigan 48393
PHONE: (248) 705-9212

REV.	DATE	DESCRIPTION
A	08/09/23	ISSUED FOR REVIEW
B	08/21/23	REVISED CD
0	08/24/23	FINAL CD
1	01/25/24	REVISED FINAL CD
2	05/29/24	REVISED FINAL CD
3	02/20/25	REVISED FINAL CD

STATE OF KENTUCKY
DMITRIY V. ALBUL
25093
LICENSED
PROFESSIONAL ENGINEER

02-21-25

SITE INFORMATION:

CK AGEE RIDGE

13401 N. HWY 127
ALBANY, KY 42602
CLINTON COUNTY

SITE NUMBER:
724991

SITE NAME:
CK AGEE RIDGE

PID NUMBER:	16933258
DRAWN BY:	RC
CHECKED BY:	PL
DATE:	08.09.23

SHEET TITLE:

PSC MAP

SHEET NUMBER:

PSC—1

MIK PAD & CANOPY REV 4.3.1 02/03/25

Federal Aviation Administration

« OE/AAA

Archive Search Results Form 7460-1 for ASN 2024-ASO-4127-OE

Overview

Study (ASN):	2024-ASO-4127-OE	**Received Date:**	02/21/2024
Prior Study:	2023-ASO-18408-OE	**Entered Date:**	02/21/2024
Status:	Determined	**Completion Date:**	05/07/2024
Letters:	Determination	**Expiration Date:**	11/07/2025
Supplemental Form 7460-2:	Please login to add a Supplemental Form 7460-2.	**Map:**	View Map

Sponsor Information

Sponsor:	TowerCom VI-B, LLC
Attention Of:	Chip Bulloch
Address:	241 Atlantic Blvd.
Address2:	Suite 201
City:	Neptune Beach
State:	FL
Postal Code:	32266
Country:	US
Phone:	678-525-2576
Fax:	

Sponsor's Representative Information

Representative:	
Attention Of:	Clyde Pittman
Address:	1423 S. Patrick Drive
Address2:	
City:	Satellite Beach
State:	FL
Postal Code:	32937
Country:	US
Phone:	321-777-1266
Fax:	

Construction Info

Notice Of:	CONSTR
Duration:	PERM (Months: 0 Days: 0)
Work Schedule:	
Date Built:	

Structure Summary

Structure Type:	Antenna Tower
Structure Name:	CK Agee Ridge
FCC Number:	

Structure Details

Latitude (NAD 83):	36° 50' 43.33" N
Longitude (NAD 83):	85° 11' 00.66" W
Horizontal Datum:	NAD 83
Survey Accuracy:	1A
Marking/Lighting:	Dual-red and medium intensity
Other Description:	
Current Marking/Lighting:	N/A Proposed Structure
Current Marking/Lighting Other Description:	
Name:	
City:	Albany
State:	KY
Nearest County:	Clinton
Nearest Airport:	K24
Distance to Structure:	64319.56 feet
On Airport:	No
Direction to Structure:	201.56°
Description of Location:	325 feet north of US Hwy 127, 430 feet west of Salt Lick Rd.
Description of Proposal:	Proposed antenna structure, filing due to addition of CBAND. Previously filed and approved under FAA ASN 2023-ASO-18408-OE with additional frequencies.

Height and Elevation

	Proposed	DNE	DET
Site Elevation:	995		
Structure Height:	260	0	**260**
Total Height (AMSL):	1255	0	**1255**

Frequencies

Low Freq	High Freq	Unit	ERP	Unit
824	849	MHz	861.11	W
869	894	MHz	861.11	W
3700	3900	MHz	74498.92	W

Previous Back to Search Result Next

Mail Processing Center
Federal Aviation Administration
Southwest Regional Office
Obstruction Evaluation Group
10101 Hillwood Parkway
Fort Worth, TX 76177

Aeronautical Study No.
2024-ASO-4127-OE
Prior Study No.
2023-ASO-18408-OE

Issued Date: 05/07/2024

Chip Bulloch
TowerCom VI-B, LLC
241 Atlantic Blvd.
Suite 201
Neptune Beach, FL 32266

**** DETERMINATION OF NO HAZARD TO AIR NAVIGATION ****

The Federal Aviation Administration has conducted an aeronautical study under the provisions of 49 U.S.C., Section 44718 and if applicable Title 14 of the Code of Federal Regulations, part 77, concerning:

Structure:	Antenna Tower CK Agee Ridge
Location:	Albany, KY
Latitude:	36-50-43.33N NAD 83
Longitude:	85-11-00.66W
Heights:	995 feet site elevation (SE)
	260 feet above ground level (AGL)
	1255 feet above mean sea level (AMSL)

This aeronautical study revealed that the structure does not exceed obstruction standards and would not be a hazard to air navigation provided the following condition(s), if any, is(are) met:

Emissions from this site must be in compliance with the parameters set by collaboration between the FAA and telecommunications companies and reflected in the FAA 5G C band compatibility evaluation process (such as power, frequencies, and tilt angle). Operational use of this frequency band is not objectionable provided the Wireless Providers (WP) obtain and adhere to the parameters established by the FAA 5G C band compatibility evaluation process. **Failure to comply with this condition will void this determination of no hazard.**

As a condition to this Determination, the structure is to be marked/lighted in accordance with FAA Advisory circular 70/7460-1 M, Obstruction Marking and Lighting, a med-dual system-Chapters 4,8(M-Dual),&15.

Any failure or malfunction that lasts more than thirty (30) minutes and affects a top light or flashing obstruction light, regardless of its position, should be reported immediately to (877) 487-6867 so a Notice to Air Missions (NOTAM) can be issued. As soon as the normal operation is restored, notify the same number.

It is required that FAA Form 7460-2, Notice of Actual Construction or Alteration, be e-filed any time the project is abandoned or:

_____ At least 10 days prior to start of construction (7460-2, Part 1)
__X__ Within 5 days after the construction reaches its greatest height (7460-2, Part 2)

See attachment for additional condition(s) or information.
This determination expires on 11/07/2025 unless:

(a) the construction is started (not necessarily completed) and FAA Form 7460-2, Notice of Actual Construction or Alteration, is received by this office.
(b) extended, revised, or terminated by the issuing office.
(c) the construction is subject to the licensing authority of the Federal Communications Commission (FCC) and an application for a construction permit has been filed, as required by the FCC, within 6 months of the date of this determination. In such case, the determination expires on the date prescribed by the FCC for completion of construction, or the date the FCC denies the application.

NOTE: REQUEST FOR EXTENSION OF THE EFFECTIVE PERIOD OF THIS DETERMINATION MUST BE E-FILED AT LEAST 15 DAYS PRIOR TO THE EXPIRATION DATE. AFTER RE-EVALUATION OF CURRENT OPERATIONS IN THE AREA OF THE STRUCTURE TO DETERMINE THAT NO SIGNIFICANT AERONAUTICAL CHANGES HAVE OCCURRED, YOUR DETERMINATION MAY BE ELIGIBLE FOR ONE EXTENSION OF THE EFFECTIVE PERIOD.

This determination is based, in part, on the foregoing description which includes specific coordinates, heights, frequency(ies) and power. Any changes in coordinates, heights, and frequencies or use of greater power, except those frequencies specified in the Colo Void Clause Coalition; Antenna System Co-Location; Voluntary Best Practices, will void this determination. Any future construction or alteration, including increase to heights, power, or the addition of other transmitters, requires separate notice to the FAA.This determination includes all previously filed frequencies and power for this structure.

If construction or alteration is dismantled or destroyed, you must submit notice to the FAA within 5 days after the construction or alteration is dismantled or destroyed.

This determination does include temporary construction equipment such as cranes, derricks, etc., which may be used during actual construction of the structure. However, this equipment shall not exceed the overall heights as indicated above. Equipment which has a height greater than the studied structure requires separate notice to the FAA.

This determination concerns the effect of this structure on the safe and efficient use of navigable airspace by aircraft and does not relieve the sponsor of compliance responsibilities relating to any law, ordinance, or regulation of any Federal, State, or local government body.

A copy of this determination will be forwarded to the Federal Communications Commission (FCC) because the structure is subject to their licensing authority.

If we can be of further assistance, please contact our office at (718) 553-2611, or angelique.eersteling@faa.gov. On any future correspondence concerning this matter, please refer to Aeronautical Study Number 2024-ASO-4127-OE.

Signature Control No: 613245038-620909177 (DNE)
Angelique Eersteling
Technician

Attachment(s)
Additional Information
Case Description
Frequency Data
Map(s)

cc: FCC

"BASIS FOR DECISION

Part 77 authorizes the FAA to evaluate a structure or object's potential electromagnetic effects on air navigation, communication facilities, and other surveillance systems. It also authorizes study of impact on arrival, departure, and en route procedures for aircraft operating under visual or instrument flight rules, as well as the impact on airport traffic capacity at existing public use airports. Broadcast in the 3.7 to 3.98 GHz frequency (5G C band) currently causes errors in certain aircraft radio altimeters and the FAA has determined they cannot be relied upon to perform their intended function when experiencing interference from wireless broadband operations in the 5G C band. The FAA has adopted Airworthiness Directives for all transport and commuter category aircraft equipped with radio altimeters that prohibit certain operations when in the presence of 5G C band

This determination of no hazard is based upon those mitigations implemented by the FAA and operators of transport and commuter category aircraft, and helicopters operating in the vicinity of your proposed location. It is also based on telecommunication industry and FAA collaboration on acceptable power levels and other parameters as reflected in the FAA 5G C band evaluation process.

The FAA 5G C band compatibility evaluation is a data analytics system used by FAA to evaluate operational hazards related to aircraft design. The FAA 5G C band compatibility evaluation process refers to the process in which the telecommunication companies and the FAA have set parameters, such as power output, locations, frequencies, and tilt angles for antenna that mitigate the hazard to aviation. As the telecommunication companies and FAA refine the tools and methodology, the allowable frequencies and power levels may change in the FAA 5G C band compatibility evaluation process. Therefore, your proposal will not have a substantial adverse effect on the safe and efficient use of the navigable airspace by aircraft provided the equipment and emissions are in compliance with the parameters established through the FAA 5G C band compatibility evaluation process.

Any future changes that are not consistent with the parameters listed in the FAA 5G C band compatibility evaluation process will void this determination of no hazard.

Case Description for ASN 2024-ASO-4127-OE

Proposed antenna structure, filing due to addition of CBAND. Previously filed and approved under FAA ASN 2023-ASO-18408-OE with additional frequencies.

Frequency Data for ASN 2024-ASO-4127-OE

LOW FREQUENCY	HIGH FREQUENCY	FREQUENCY UNIT	ERP	ERP UNIT
824	849	MHz	861.11	W
869	894	MHz	861.11	W
3700	3900	MHz	74498.92	W

TOPO Map for ASN 2024-ASO-4127-OE

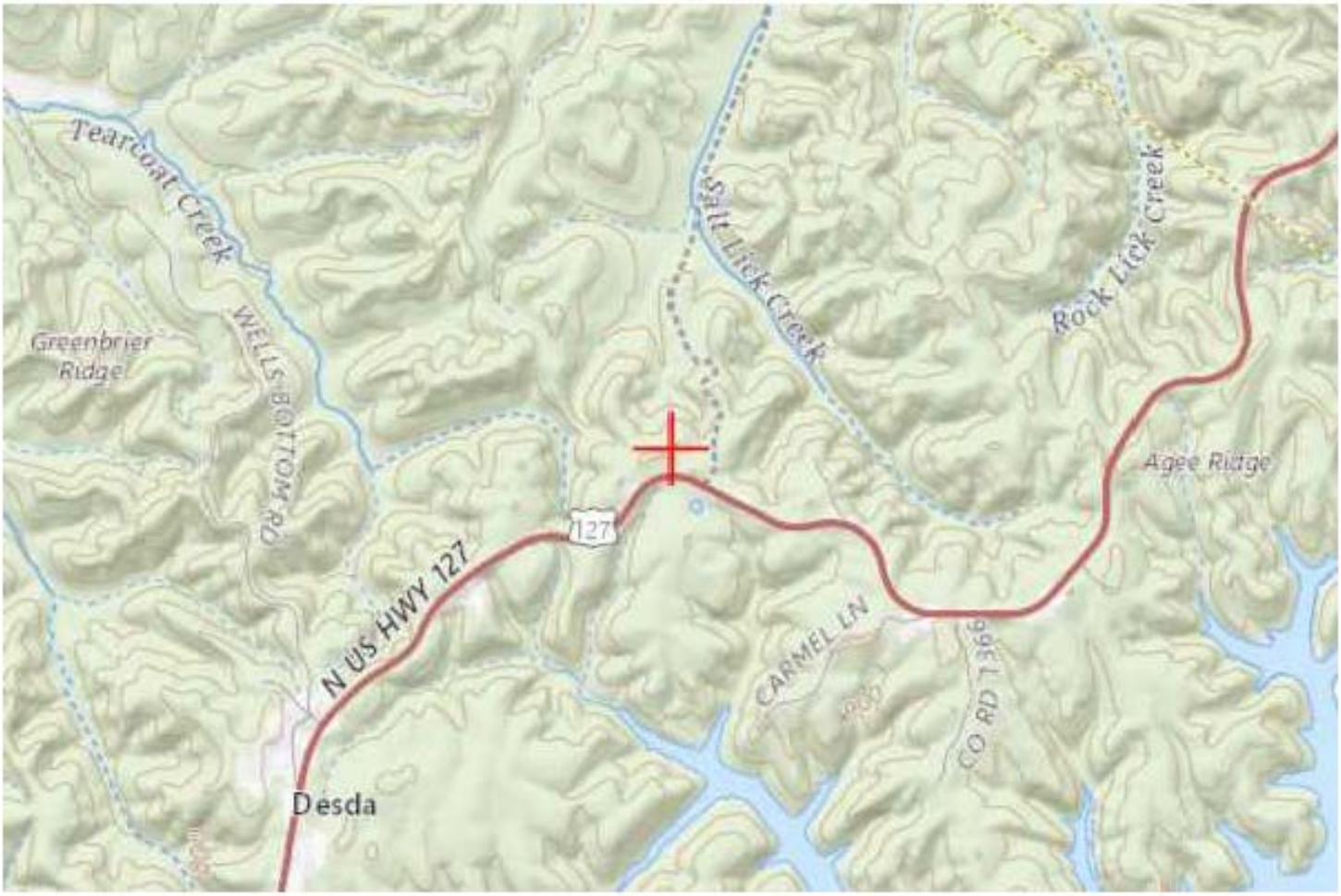

Sectional Map for ASN 2024-ASO-4127-OE

KENTUCKY TRANSPORTATION CABINET

KENTUCKY AIRPORT ZONING COMMISSION

APPLICATION FOR PERMIT TO CONSTRUCT OR ALTER A STRUCTURE

JURISDICTION

602 KAR 50:030

Section 1. The commission has zoning jurisdiction over that airspace over and around the public use and military airports within the Commonwealth which lies above the imaginary surface that extends outward and upward at one (1) of the following slopes:

(1) 100 to one (1) for a horizontal distance of 20,000 feet from the nearest point of the nearest runway of each public use airport and military airport with at least one (1) runway 3,200 feet or more in length; or

(2) fifty (50) to one (1) for a horizontal distance of 10,000 feet from the nearest point of the nearest runway of each public use and military airport with its longest runway less than 3,200 feet in length.

Section 2. The commission has zoning jurisdiction over the use of land and structures within public use airports within the state.

Section 3. The commission has jurisdiction from the ground upward within the limits of the primary and approach surfaces of each public use airport and military airport as depicted on airport zoning maps approved by the Kentucky Airport Zoning Commission.

Section 4. The Commission has jurisdiction over the airspace of the Commonwealth that exceeds 200 feet in height above the ground.

Section 5. The owner or person who has control over a structure which penetrates or will penetrate the airspace over which the Commission has Jurisdiction shall apply for a permit from the Commission in accordance with 602 KAR 50:090.

INSTRUCTIONS

1. "Alteration" means to increase or decrease the height of a structure or change the obstruction marking and lighting.
2. "Applicant" means the person who will own or have control over the completed structure.
3. "Certification by Applicant" shall be made by the individual who will own or control the completed structure; or a partner in a partnership; or the president or authorized officer of a corporation company, or association; or the authorized official of a body politic; or the legally designated representative of a trustee, receiver, or assignee.
4. Prepare the application and forward to the Kentucky Dept. of Aviation, ATTN: Airport Zoning Commission, 90 Airport Drive, Frankfort KY 40601. For questions, telephone 502-782-4043.
5. The statutes applicable to the Kentucky Airport Commission are KRS 183.861 to 183.990 and the administrative regulations are 602 KAR Chapter 50.
6. When applicable, attach the following appendices to the application:

Appendix A. A 7.5 minute quadrangle topographical map prepared by the U.S. Geological Survey and the Kentucky Geological Survey with the exact location of the structure which is the subject of the application indicated thereon. (*The 7.5 minute quadrangle map may be obtained from the Kentucky Geological Survey, Department of Mines and Minerals, Lexington, KY 40506.*)

Appendix B. For structures on or very near to property of a public use airport, a copy of the airport layout drawing (ALP) with the exact location of the structure which is the subject of this application indicated thereon. (*The ALP may be obtained from the Chairperson of the local airport board or the Kentucky Airport Zoning Commission.*)

Appendix C. Copies of Federal Aviation Administration Applications (*FFA Form 7460-1*) or any orders issued by the manager, Air Traffic Division, FAA regional office.

Appendix D. If the applicant has indicated in item number 7 of the application that the structure will not be marked or lighted in accordance with the regulations of the Commission, the applicant shall attach a written request for a determination by the commission that the marking and lighting are not necessary. The applicant shall specifically state the reasons that the absence of marking and lighting will not impair the safety of air navigation.

Appendix E. The overall height in feet of the overhead transmission line or static wire above ground level or mean water level with span length 1,000 feet and over shall be depicted on a blueprint profile map.

PENALTIES

1. Persons failing to comply with the Airport Zoning Commission statutes and regulations are liable for a fine or imprisonment as set forth in KRS 183.990(3).
2. Applicants are cautioned: Noncompliance with Federal Aviation Administration Regulations may provide for further penalties.

TEAM KENTUCKY TRANSPORTATION CABINET

KENTUCKY TRANSPORTATION CABINET

KENTUCKY AIRPORT ZONING COMMISSION

APPLICATION FOR PERMIT TO CONSTRUCT OR ALTER A STRUCTURE

APPLICANT (*name*) Tower Com VI-B, LLC	**PHONE** (678) 525-2576	**FAX** N/A	**KY AERONAUTICAL STUDY #**	
ADDRESS (*street*) 241 Atlantic Blvd., Ste. 201	**CITY** Neptune Beach		**STATE** FL	**ZIP** 32266
APPLICANT'S REPRESENTATIVE (*name*) Jinay Vascocu	**PHONE** (678) 525-2576	**FAX** N/A		
ADDRESS (*street*) 241 Atlantic Blvd., Ste. 201	**CITY** Neptune Beach		**STATE** FL	**ZIP** 32266
APPLICATION FOR ☒ New Construction ☐ Alteration ☐ Existing **DURATION** ☐ Permanent ☐ Temporary (*months* *days*)			**WORK SCHEDULE** Start End	
TYPE ☐ Crane ☐ Building ☒ Antenna Tower ☐ Power Line ☐ Water Tank ☐ Landfill ☐ Other	**MARKING/PAINTING/LIGHTING PREFERRED** ☐ Red Lights & Paint ☐ White- medium intensity ☐ White- high intensity ☒ Dual- red & medium intensity white ☐ Dual- red & high intensity white ☐ Other			
LATITUDE 36°50'43.33"	**LONGITUDE** 85°11'0.66"		**DATUM** ☒ NAD83 ☐ NAD27 ☐ Other	
NEAREST KENTUCKY City Aaron County Clinton	**NEAREST KENTUCKY PUBLIC USE OR MILITARY AIRPORT** Russell County Airport			
SITE ELEVATION (AMSL, *feet*) 994.8	**TOTAL STRUCTURE HEIGHT** (AGL, *feet*) 260		**CURRENT** (*FAA aeronautical study #*) 2023-ASO-18408-OE	
OVERALL HEIGHT (*site elevation plus total structure height, feet*) 1254.8			**PREVIOUS** (*FAA aeronautical study #*) N/A	
DISTANCE (*from nearest Kentucky public use or Military airport to structure*) 12 Miles Approximately			**PREVIOUS** (*KY aeronautical study #*) N/A	
DIRECTION (*from nearest Kentucky public use or Military airport to structure*) SSE				

DESCRIPTION OF LOCATION (*Attach USGS 7.5 minute quadrangle map or an airport layout drawing with the precise site marked and any certified survey.*)
Off Highway 127, Albany, Clinton County KY. (See attached 1-& Quad map)

DESCRIPTION OF PROPOSAL
Proposed 255' telecommunications tower with 5' lightening rod.

FAA Form 7460-1 (*Has the "Notice of Construction or Alteration" been filed with the Federal Aviation Administration?*)
☒ No ☐ Yes, when?

CERTIFICATION (*I hereby certify that all the above entries, made by me, are true, complete, and correct to the best of my knowledge and belief.*)
PENALITIES (*Persons failing to comply with KRS 183.861 to 183.990 and 602 KAR 050 are liable for fines and/or imprisonment as set forth in KRS 183.990(3). Noncompliance with FAA regulations may result in further penalties.*)

NAME	**TITLE**	**SIGNATURE**	**DATE**
Jinay Vascocu	Dir. of Site Devel		5/23/24

COMMISSION ACTION

☐ Chairperson, KAZC
☐ Administrator, KAZC

☐ Approved **SIGNATURE** **DATE**
☐ Disapproved

DELTA OAKS GROUP

GEOTECHNICAL INVESTIGATION REPORT

April 23, 2024

Prepared For:

TeleCAD Wireless

CK Agee Ridge
724991
Proposed 255-Foot Self-Supporting Tower
Highway 127, Albany (Clinton County), Kentucky 42602
Latitude N 36° 50' 43.3" Longitude W 85° 11' 00.7"

Delta Oaks Group Project GEO24-21180-08
Revision 0
geotech@deltaoaksgroup.com

Performed By:

Michael Thomas

Reviewed By:

Joseph V. Borrelli, Jr., P.E.

DocuSigned by:
Joseph V. Borrelli
2CA5B8CE3AEF4C1...

STATE OF KENTUCKY
JOSEPH V. BORRELLI
30809
LICENSED
4/23/2024
PROFESSIONAL ENGINEER

INTRODUCTION

This geotechnical investigation report has been completed for the proposed 255-foot self-supporting tower located at Highway 127 in Albany (Clinton County), Kentucky. The purpose of this investigation was to provide engineering recommendations and subsurface condition data at the proposed tower location. A geotechnical engineering interpretation of the collected information was completed and utilized to suggest design parameters regarding the adequacy of the structure's proposed foundation capacity under various loading conditions. This report provides the scope of the geotechnical investigation; geologic material identification; results of the geotechnical laboratory testing; and design parameter recommendations for use in the design of the telecommunication facility's foundation and site development.

SITE CONDITION SUMMARY

The proposed tower and compound are located within a wooded area exhibiting a generally flat topography across the tower compound and subject property.

REFERENCES

- Construction Drawings, provided by TeleCAD Wireless, dated August 9, 2023
- TIA Standard (TIA-222-G), dated August 2005

SUBSURFACE FIELD INVESTIGATION SUMMARY

The subsurface field investigation was conducted through the advancement of one mechanical soil test boring to the auger refusal depth of 11.8 feet bgs. Samples were obtained at selected intervals in accordance with ASTM D 1586. The sampling was conducted at the staked centerline of the proposed tower. Upon encountering auger refusal 5.0 feet of rock coring was conducted in accordance with ASTM D 2113. Soil and rock samples were transported to our laboratory and classified by a geotechnical engineer in accordance with ASTM D 2487. A detailed breakdown of the material encountered in our subsurface field investigation can be found in the boring log presented in the Appendix of this report.

Additional testing was performed on selected samples in accordance with ASTM D 7012 (Unconfined Compressive Strength – Rock). Laboratory data can be found in the Appendix of this report.

A boring plan portraying the spatial location of the boring in relation to the proposed tower, tower compound and immediate surrounding area can be found in the Appendix.

SUBSURFACE CONDITION SUMMARY

The following provides a general overview of the site's subsurface conditions based on the data obtained during our field investigation.

FILL

Fill material was not encountered during the subsurface field investigation.

SOIL

The residual soil encountered in the subsurface field investigation began at the existing ground surface in the boring and consisted of silty clay. The materials ranged from a stiff to very stiff consistency.

Auger advancement refusal was encountered during the subsurface field investigation at a depth of 11.8 feet bgs.

ROCK

Rock was encountered during the subsurface investigation at a depth of 11.8 feet bgs. The rock can be described as grey, moderately fractured, moderately weathered, hard, limestone.

SUBSURFACE WATER

At the time of drilling, subsurface water was not encountered during the subsurface investigation. However, subsurface water elevations can fluctuate throughout the year due to variations in climate, hydraulic parameters, nearby construction activity and other factors.

FROST PENETRATION

The frost penetration depth for Clinton County, Kentucky is 30 inches (2.5 feet).

CORROSIVITY

Soil resistivity was performed in accordance with ASTM G187 with a test result of 3,600 ohms-cm.

FOUNDATION DESIGN SUMMARY

In consideration of the provided tower parameters and the determined soil characteristics, Delta Oaks Group recommends utilizing a shallow foundation and/or drilled shaft foundation for the proposed structure. The strength parameters presented in the following sections can be utilized for design of the foundation.

GENERAL SUBSURFACE STRENGTH PARAMETERS

Boring	Depth (bgs)	USCS	Moist/Buoyant Unit Weight (pcf)	Phi Angle (degrees)	Cohesion (psf)
B-1	0.0 – 1.5	CL-ML	120	0	1,000
	1.5 - 4.0	CL-ML	120	0	1,500
	4.0 - 6.0	CL-ML	120	0	1,700
	6.0 - 9.0	CL-ML	120	0	2,300
	9.0 - 11.8	CL-ML	120	0	1,800
	11.8 - 16.8	LIMESTONE	150	0	10,000

- The unit weight provided assumes overburden soil was compacted to a minimum of 95% of the maximum dry density as obtained by the standard Proctor method (ASTM D 698) and maintained a moisture content within 3 percent of optimum.
- The values provided for phi angle and cohesion should be considered ultimate.

SUBSURFACE STRENGTH PARAMETERS – SHALLOW FOUNDATION

Boring	Dimensions (feet)	Depth (feet bgs)	Net Ultimate Bearing Capacity (psf)
B-1	5.0 x 5.0	3.0	10,360
		4.0	12,160
		5.0	12,580
		6.0	17,590
	10.0 x 10.0	3.0	9,810
		4.0	11,320
		5.0	11,530
		6.0	15,890
	15.0 x 15.0	3.0	9,620
		4.0	11,040
		5.0	11,180
		6.0	15,320
	20.0 x 20.0	3.0	9,530
		4.0	10,910
		5.0	11,010
		6.0	15,040
	25.0 x 25.0	3.0	9,470
		4.0	10,820
		5.0	10,910
		6.0	14,870

- Delta Oaks Group recommends the foundation bear a minimum of 3.0 feet bgs.
- A sliding friction factor of 0.35 can be utilized along the base of the proposed foundation.
- An Ultimate Passive Pressure Table with a reduction due to frost penetration to a depth of 2.5 feet bgs is presented on the following page.
- Delta Oaks Group recommends an appropriate factor of safety be utilized for the design of the foundation.

ULTIMATE PASSIVE PRESSURE VS. DEPTH - TOWER FOUNDATION

Soil Layers (feet)		Moist Unit Weight	Phi Angle	Cohesion	PV	KP	Ph
Top	0.0	120	0	1,000	0.00	1.00	1,000.00
Bottom	1.5	120	0	1,000	180.00	1.00	1,090.00
Top	1.5	120	0	1,500	180.00	1.00	1,590.00
Bottom	2.5	120	0	1,500	300.00	1.00	1,650.00
Top	2.5	120	0	1,500	300.00	1.00	3,300.00
Bottom	4.0	120	0	1,500	480.00	1.00	3,480.00
Top	4.0	120	0	1,700	480.00	1.00	3,880.00
Bottom	6.0	120	0	1,700	720.00	1.00	4,120.00
Top	6.0	120	0	2,300	720.00	1.00	5,320.00
Bottom	9.0	120	0	2,300	1,080.00	1.00	5,680.00
Top	9.0	120	0	1,800	1,080.00	1.00	4,680.00
Bottom	10.0	120	0	1,800	1,200.00	1.00	4,800.00

SUBSURFACE STRENGTH PARAMETERS - DRILLED SHAFT FOUNDATION

Boring	Depth (bgs)	Net Ultimate Bearing Capacity (psf)	Ultimate Skin Friction - Compression (psf)	Ultimate Skin Friction - Uplift (psf)
B-1	0.0 – 3.0	--	--	--
	3.0 – 4.0	17,400	820	820
	4.0 – 6.0	28,120	930	930
	6.0 – 9.0	53,080	1,260	1,260
	9.0 – 11.8	86,020	990	990
	11.8 – 16.8	89,650	4,000	3,000

- The top 3.0 feet of soil should be ignored due to the frost penetration and the potential soil disturbance during construction.
- The values presented assume the concrete is cast-in-place against earth walls and any casing utilized during construction of the foundation was removed.
- Delta Oaks Group recommends an appropriate factor of safety be utilized for the design of the foundation.

CONSTRUCTION

SITE DEVELOPMENT

The proposed access road and tower compound should be evaluated by a Geotechnical Engineer, or their representative, after the removal or "cutting" of the areas to design elevation but prior to the placement of any structural fill material to verify the presence of unsuitable or weak material. Unsuitable or weak materials should be undercut to a suitable base material as determined by a Geotechnical Engineer, or their representative. Backfill of any undercut area(s) should be conducted in accordance with the recommendations provided in the *STRUCTURAL FILL PLACEMENT* section of this report.

Excavations should be sloped or shored in accordance and compliance with OSHA 29 CFR Part 1926, Excavation Trench Safety Standards as well as any additional local, state and federal regulations.

STRUCTURAL FILL PLACEMENT

Structural fill materials should be verified, prior to utilization, to have a minimum unit weight of 110 pcf (pounds per cubic foot) when compacted to a minimum of 95% of its maximum dry density and within plus or minus 3 percentage points of optimum moisture. Materials utilized should not contain more than 5 percent by weight of organic matter, waste, debris or any otherwise deleterious materials. The Liquid Limit should be no greater than 40 with a Plasticity Index no greater than 20. Structural fill material should contain a maximum particle size of 4 inches with 20 percent or less of the material having a particle size between 2 and 4 inches. Backfill should be placed in thin horizontal lifts not to exceed 8 inches (loose) in large grading areas and 4 inches (loose) where small handheld or walk-behind compaction equipment will be utilized. The potential suitability of on-site materials to be utilized as fill should be evaluated by a Geotechnical Engineer, or their representative just prior to construction.

During construction structural fill placement should be monitored and tested. This should include at minimum, visual observation as well as a sufficient amount of in-place field density tests by a Geotechnical Engineer, or their representative. Materials should be compacted to a minimum of 95% of the maximum dry density as determined by ASTM D 698 (standard Proctor method). Moisture contents should be maintained to within plus or minus 3 percentage points of the optimum moisture content.

SHALLOW FOUNDATIONS

Foundation excavation(s) should be evaluated by a Geotechnical Engineer, or their representative, prior to reinforcing steel and concrete placement. This evaluation should include visual observation to verify a level bearing surface; vertical side-walls with no protrusions, sloughing or caving; and the exposed bearing surface is free of deleterious material, loose soil and standing water. Excavation dimensions should be verified and testing performed on the exposed bearing surface to verify compliance with design recommendations. Bearing testing should be conducted in accordance with ASTM STP399 (Dynamic Cone Penetrometer). A 6-inch layer of compacted crushed stone should be installed prior to reinforcing steel and concrete placement. If subsurface water is encountered during excavation dewatering methods such as sump pumps or well points may be required.

DRILLED SHAFT FOUNDATIONS

Drilled shaft foundations (caissons) are typically installed utilizing an earth auger to reach the design depth of the foundation. Specialized roller bits or core bits can be utilized to penetrate boulders or rock. The equipment utilized should have cutting teeth to result in an excavation with little or no soil smeared or caked on the excavation sides with spiral-like corrugated walls. The drilled shaft design diameter should be maintained throughout the excavation with a plumbness tolerance of 2 percent of the length and an eccentricity tolerance of 3 inches from plan location. A removable steel casing can be installed in the shaft to prevent caving of the excavation sides due to soil relaxation. Upon completion of the drilling and casing placement, loose soils and subsurface water greater than 3-inches in depth should be removed from the bottom of the excavation for the "dry" installation method. The drilled shaft installation should be evaluated by a Geotechnical Engineer, or their representative, to verify suitable end bearing conditions, design diameter and bottom cleanliness. The evaluation should be conducted immediately prior to as well as during concrete placement operations.

The drilled shaft should be concreted as soon as reasonably practical after excavation to reduce the deterioration of the supporting soils to prevent potential caving and water intrusion. A concrete mix design with a slump of 6 to 8 inches employed in conjunction with the design concrete compressive strength should be utilized for placement. Super plasticizer may be required to obtain the recommended slump range. During placement, the concrete may fall freely through the open area in the reinforcing steel cage provided it does not strike the reinforcing steel and/or the casing prior to reaching the bottom of the excavation. The removable steel casing should be extracted as concrete is placed. During steel casing removal a head of concrete should be maintained above the bottom of the casing to prevent soil and water intrusion into the concrete below the bottom of the casing.

If subsurface water is anticipated and/or weak soil layers are encountered drilled shafts are typically installed utilizing the "wet" method by excavating beneath a drilling mud slurry. The drilling mud slurry is added to the drilled shaft excavation after groundwater has been encountered and/or the sides of the excavation are observed to be caving or sloughing. Additional inspection by a Geotechnical Engineer, or their representative, during the "wet" method should consist of verifying maintenance of sufficient slurry head, monitoring the specific gravity, pH and sand content of the drilling slurry, and monitoring any changes in the depth of the excavation between initial approval and just prior to concreting.

Concrete placement utilizing the "wet" method is conducted through a tremie pipe at the bottom of the excavation with the drilling mud slurry level maintained at a minimum of 5 feet or one shaft diameter, whichever is greater, above the ground water elevation. The bottom of the tremie should be set one tremie pipe diameter above the excavation. A closure flap at the bottom of the tremie or a sliding plug introduced into the tremie before the concrete is recommended to reduce the potential contamination of the concrete by the drilling mud slurry. The bottom of the tremie must be maintained in the concrete during placement. Additional concrete should be placed through the tremie causing the slurry to overflow from the excavation in order to reduce the potential for the development of "slurry pockets" remaining in the drilled shaft.

QUALIFICATIONS

The design parameters and conclusions provided in this report have been determined in accordance with generally accepted geotechnical engineering practices and are considered applicable to a rational degree of engineering certainty based on the data available at the time of report preparation and our practice in this geographic region. All recommendations and supporting calculations were prepared based on the data available at the time of report preparation and knowledge of typical geotechnical parameters in the applicable geographic region.

The subsurface conditions used in the determination of the design recommendations contained in this report are based on interpretation of subsurface data obtained at specific boring locations. Irrespective of the thoroughness of the subsurface investigation, the potential exists that conditions between borings will differ from those at the specific boring locations, that conditions are not as anticipated during the original analysis, or that the construction process has altered the soil conditions. That potential is significantly increased in locations where existing fill materials are encountered. Additionally, the nature and extent of these variations may not be evident until the commencement of construction. Therefore, a geotechnical engineer, or their representative, should observe construction practices to confirm that the site conditions do not differ from those conditions anticipated in design. If such variations are encountered, Delta Oaks Group should be contacted immediately in order to provide revisions and/or additional site exploration as necessary.

Samples obtained during our subsurface field investigation will be retained by Delta Oaks Group for a period of 30 days unless otherwise instructed by TeleCAD Wireless. No warranty, expressed or implied, is presented.

Delta Oaks Group appreciates the opportunity to be of service for this Geotechnical Investigation Report. Please do not hesitate to contact Delta Oaks Group with any questions or should you require additional service on this project.

APPENDIX

BORING PLAN

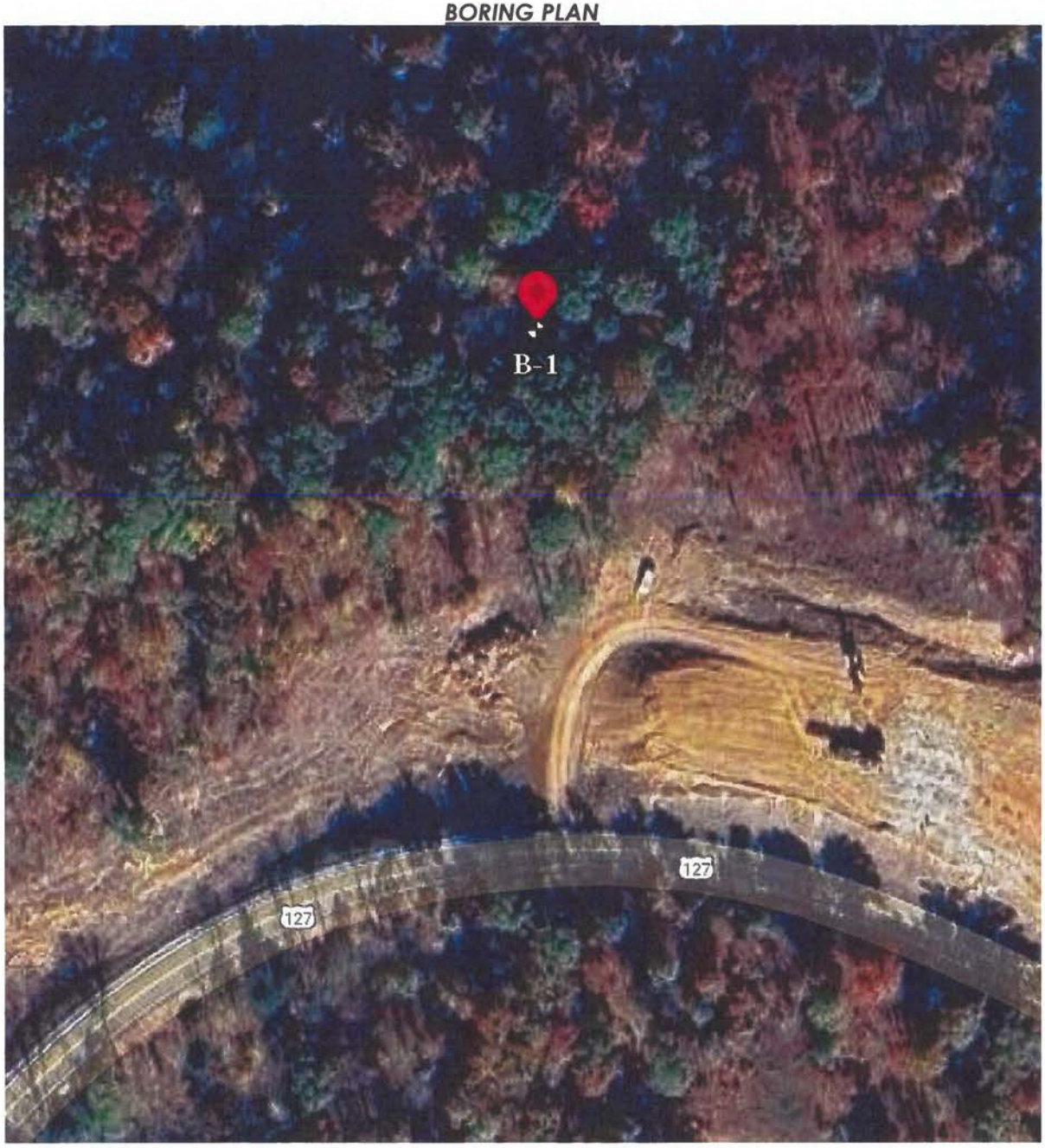

PROJECT NAME CK Agee Ridge (724991)

PROJECT NUMBER GEO24-21180-08

PROJECT LOCATION Albany, Kentucky

CLIENT TeleCAD Wireless

Boring No.: B-1

DATE DRILLED : 4/15/2024

DRILLING METHOD : Hollow Stem Auger & Rock Coring

GROUND ELEVATION :

BORING DEPTH (ft) : 16.8

GROUND WATER LEVELS:

AT TIME OF DRILLING : --- Not encountered

AT END OF DRILLING : --- Not encountered

AFTER DRILLING : --- N/A

DEPTH (ft)	MATERIAL DESCRIPTION	SAMPLE TYPE	MATERIAL CLASSIFICATION	Pocket Penetrometer (tsf)	BLOWS 1st	BLOWS 2nd	BLOWS 3rd	N VALUE
0	Orange, brown, stiff, SILTY CLAY (CL-ML), with organics, trace sand, moist		CL-ML		2	3	7	10
	-- very stiff, with sand				7	7	8	15
5					7	7	10	17
	-- trace grey, black				7	10	13	23
10					6	8	10	18
	Grey, moderately fractured, moderately weathered, hard, LIMESTONE				REC = 100.0 %	RQD = 86.7 %		
15								
	Refusal at 11.8 feet. Bottom of borehole at 16.8 feet.							
20								

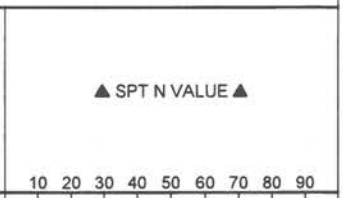

DIRECTIONS FROM THE COUNTY OFFICE (100 SOUTH CROSS STREET, SUITE 115, ALBANY, KENTUCKY 42602):

HEAD SOUTH ON U S-127 S / S CROSS ST TOWARDS W JEFFERSON ST 95 FT, TURN LEFT ONTO W JEFFERSON ST, THEN IMMEDIATELY TURN LEFT ONTO US-127 N / S WASHINGTON ST 2.8 MI, TURN RIGHT ONTO US-127 N / CROSS ST 1.7 MI, TURN. LEFT ON TO US-127 N / KY- 90 / S HIGHWAY 127 8.5 MI, ARRIVE AT HIGHWAY 127. ALBANY, KY 42602.

PREPARED BY: LAB, 49030 POTOMAC TRAIL, SUITE 100, WIXOM, MI, 48393. TEL: 248-705-9212

FILED
AT 1:35P M
JUN 08 2023 Pd 50
6
CLINTON COUNTY
NATHAN COLLINS
County Clerk

Prepared by and return to:
Brian P. Cain, Esq.
Holt Ney Zatcoff & Wasserman, LLP
100 Galleria Parkway, Suite 1800
Atlanta, Georgia 30339

Site Name: CK Agee

MEMORANDUM OF LEASE

This Memorandum of Lease is made on May 27, 2023, by and between **JERRY LYNN LOWHORN and FRANCES LOWHORN**, a married couple, as Lessor, whose address is 1406 Speck Road, Albany, Kentucky 42602, and **TOWERCOM VI-B, LLC**, a Delaware limited liability company, as Lessee, whose address is 241 Atlantic Boulevard, Suite 201, Neptune Beach, Florida 32266.

1. Lessor and Lessee are parties to an Option and Ground Lease Agreement dated as of May 27, 2023 (the "Lease Agreement"); the terms and provisions of which are incorporated herein by this reference. The premises covered by the Lease Agreement are located in **Albany, Clinton County, Kentucky**, as more fully described in the legal description attached hereto as **Exhibit A** ("Leased Premises").

2. Pursuant to the Lease Agreement, Lessor has granted, and by these presents does grant, to Lessee non-exclusive easements for: (a) ingress and egress, seven (7) days a week, twenty-four (24) hours a day, on foot or motor vehicle (including trucks), and (b) the installation and maintenance of utility wires, poles, cables (including fiber optic cable), conduits, and pipes over, under, or along the Lessor's property, the location of said easements being shown on **Exhibit B** hereto (the "Easements"). The easement rights herein granted include the right and authority of Lessee to grant or assign to third parties all or some of the easement rights granted to Lessee herein.

3. The Lease Agreement provides for an initial term of five (5) years and nine (9) additional five (5) year terms, which shall occur automatically unless Lessee delivers written notice of intent not to renew to Lessor at least thirty (30) days prior to the expiration of the initial term, or the renewal term then in effect.

4. The Lease Agreement provides that during the term of the Lease Agreement neither Lessor nor any tenant or person or entity claiming by or through Lessor shall be allowed to install or operate a communications facility, including a telecommunications transmission tower, or operate

an antenna site leasing business which competes directly or indirectly with Lessee on the lands of Lessor within a radius of five (5) miles of the Leased Premises.

5. The Lease Agreement also provides that, without Lessee's prior written consent, Lessor shall not, directly or indirectly, assign its right in the Lease Agreement or the rent or any rights thereunder, or sell any easement or interest in any portion of Lessor's property (including the Leased Premises), except in connection with conveyance of fee simple title to Lessor's property.

6. If at any time during the term of the Lease Agreement, Lessor receives a bona fide written offer from a third person (the "Offer") to sell, assign, convey, lease or otherwise transfer or create any interest in the current or future rent, the Leased Premises or Lessor's Property, or any portion thereof, which Lessor desires to accept, Lessor shall first give Lessee written notice (including a copy of the proposed contract) of such Offer prior to becoming obligated under such Offer, with such notice giving Lessee the right to purchase the Leased Premises (or, at Lessee's option, a permanent easement in the location of the Leased Premises, which will continue to include the appurtenant Easements for access and utilities granted in the Lease Agreement).

[Signatures on Following Page]

IN WITNESS WHEREOF, Lessor and Lessee hereto have executed and delivered this Memorandum of Lease as of the date set forth above.

LESSOR:

Jerry L Lowhorn
Jerry Lynn Lowhorn

Frances Lowhorn
Frances Lowhorn

STATE OF KENTUCKY)
COUNTY OF Clinton)

I, the undersigned, a notary public in and for the aforesaid State and County, do hereby certify that **Jerry Lynn Lowhorn and Frances Lowhorn**, known to me to be the same persons whose names are subscribed to the foregoing instrument, appeared before me this day in person and acknowledged that, they signed the said instrument as their free and voluntary act for the uses and purposes therein stated.

Given under my hand and seal this 22nd day of May, 2023.

Notary Public

[NOTARY SEAL]

Gary A. Little
Notary Public, ID KYNP58586
State at Large, Kentucky
My Commission Expires on Oct. 19, 2026

My commission expires 10-19-26

[LESSEE SIGNATURE ON NEXT PAGE]

LESSEE:

TowerCom VI-B, LLC,
a Delaware limited liability company

By: _____
Paul M. Bulloch, Jr.
Vice President

STATE OF FLORIDA)
)
COUNTY OF Palm Beach)

I, the undersigned, a notary public in and for the aforesaid State and County, do hereby certify that **Paul M. Bulloch, Jr.,** Vice President of TowerCom VI-B, LLC, a Delaware limited liability company, known to me to be the same person whose name is subscribed to the foregoing instrument, appeared before me this day in person and acknowledged that, pursuant to his authority, he signed the instrument as his free and voluntary act on behalf of the named entity, for the uses and purposes therein stated.

Given under my hand and seal this 27th day of Aug, 2023.

[NOTARY SEAL]

_____
Notary Public

My commission expires 10/07/2024

Notary Public State of Florida
Mack Johnson
My Commission HH 051412
Expires 10/07/2024

The foregoing instrument was prepared in the law offices of Holt Ney Zatcoff & Wasserman, LLP, 100 Galleria Parkway, Suite 1800, Atlanta, Georgia 30339.

By: _____
Brian P. Cain, Esq.

EXHIBIT A

LEASED PREMISES

Being on the property conveyed to Jerry Lynn Lowhorn and Frances Lowhorn by General Warranty Deed recorded in Deed Book 90, Page 605, records of Clinton County, Kentucky, and being located on US Highway 127, 2.5 miles southwest of Wolf Creek Dam at Lake Cumberland, Clinton County, Kentucky, which is further described as follows:

Commencing at the southwest corner of the U.S. Highway 127 right-of-way conveyed to the Commonwealth of Kentucky in Deed Book 160, Page 544, and being 29.61' left of the centerline of the U.S. Highway 127 Approach Station Number 34-50.00, as shown on Highway Plans Number FD52 027 9167301R; NHPP 1271 (117), and being 41.8' northeast measured along the existing right-of-way of said U.S. Highway 127 from the southwest corner of said Lowhorn property;

Thence with the north right-of way line of said U.S. Highway 127 and the south line of said Lowhorn property for the next four (4) calls: (1) N 10°29'31" E - 104.32' to a point;

Thence (2) N 31°19'14" E - 185.91' to a point;

Thence (3) N 59°22'09" E - 271.31' to a point;

Thence (4) N 84°21'27" E - 156.89' to a set iron rod with a cap stamped "FStan 3282", and being the southwest corner of the Access & Utility Easement;

Thence leaving said U.S. Highway 127 and traversing said Lowhorn property with the perimeter of said Access & Utility Easement for the next five (5) calls: (1) N 04°36'13" E - 13.76' to a set iron rod with a cap stamped "FStan 3282";

Thence (2) along a curve to the left with a radius of 50.00' and a chord of N 10°35'25" W - 26.21' to a set iron rod with a cap stamped "FStan 3282";

Thence (3) N 25°47'03" W - 81.14' to a set iron rod with a cap stamped "FStan 3282";

Thence (4) N 90°00'00" W - 67.42' to a set iron rod with a cap stamped "FStan 3282";

Thence (5) N 00°00'00" W - 30.00' to a set iron rod with a cap stamped "FStan 3282", and being the True Point of Beginning of the Lease Area;

Thence leaving said Access & Utility Easement N 00°00'00" W - 100.00' to a set iron rod with a cap stamped "FStan 3282";

Thence N 90°00'00" E - 100.00' to a set iron rod with a cap stamped "FStan 3282";

Thence S 00°00'00" E - 100.00' to a set iron rod with a cap stamped "FStan 3282";

Thence S 90°00'00" W - 100.00' to the point of beginning, containing 10,000.00 square feet as per survey by Frank L. Sellinger, II dated March 14, 2023.

EXHIBIT B

EASEMENTS

ACCESS & UTILITY EASEMENT

Being on the property conveyed to Jerry Lynn Lowhorn and Frances Lowhorn by General Warranty Deed recorded in Deed Book 90, Page 605, records of Clinton County, Kentucky, and being located on US Highway 127, 2.5 miles southwest of Wolf Creek Dam at Lake Cumberland, Clinton County, Kentucky, which is further described as follows:

Commencing at the southwest corner of the U.S. Highway 127 right-of-way conveyed to the Commonwealth of Kentucky in Deed Book 160, Page 544, and being 29.61' left of the centerline of the U.S. Highway 127 Approach Station Number 34-50.00, as shown on Highway Plans Number FD52 027 9167301R; NHPP 1271 (117), and being 41.8' northeast measured along the existing right-of-way of said U.S. Highway 127 from the southwest corner of said Lowhorn property;
Thence with the north right-of way line of said U.S. Highway 127 and the south line of said Lowhorn property for the next four (4) calls: (1) N 10°29'31" E - 104.32' to a point;
Thence (2) N 31°19'14" E - 185.91' to a point;
Thence (3) N 59°22'09" E - 271.31' to a point;
Thence (4) N 84°21'27" E - 156.89' to a set iron rod with a cap stamped "FStan 3282", and being the True Point of Beginning of the Access & Utility Easement;
Thence leaving said U.S. Highway 127 and traversing said Lowhorn property N 04°36'13" E - 13.76' to a set iron rod with a cap stamped "FStan 3282";
Thence along a curve to the left with a radius of 50.00' and a chord of N 10°35'25" W – 26.21' to a set iron rod with a cap stamped "Fstan 3282";
Thence N 25°47'03" W – 81.14' to a set iron rod with a cap stamped "Fstan 3282";
Thence N 90°00'00" W – 67.42' to a set iron rod with a cap stamped "Fstan 3282";
Thence N 00°00'00" W – 30.00' to a set iron rod with a cap stamped "Fstan 3282", and being the southwest corner of the Lease Area;
Thence with the south line of said Lease Area N 90°00'00" E – 100.00' to a set iron rod with a cap stamped "Fstan 3282", and being the southeast corner of said Lease Area;
Thence leaving said Lease Area S 00°00'00" E – 28.48' to a set iron rod with a cap stamped "Fstan 3282";
Thence S 25°47'03" E – 68.34' to a set iron rod with a cap stamped "Fstan 3282";
Thence along a curve to the right with a radius of 80.00' and a chord of of S 10°35'25" E - 41.93' to a set iron rod with a cap stamped "FStan 3282";
Thence S 04°36'13" W - 11.87' to a set iron rod with a cap stamped "FStan 3282" on said U.S. 127 right-of-way;
Thence with said right-of-way for the next two (2) calls: (1) N 82°24'37" W - 15.19' to a point;
Thence (2) S 84°21'27" W - 15.07' to the point of beginning, containing 6,609.75 square feet as per survey by Frank L. Sellinger, II dated March 14, 2023.

[CONTINUED ON NEXT PAGE]

UTILITY EASEMENT

Being on the property conveyed to Jerry Lynn Lowhorn and Frances Lowhorn by General Warranty Deed recorded in Deed Book 90, Page 605, records of Clinton County, Kentucky, and being located on US Highway 127, 2.5 miles southwest of Wolf Creek Dam at Lake Cumberland, Clinton County, Kentucky, which is further described as follows:

Commencing at the southwest corner of the U.S. 127 Highway right-of-way conveyed to the Commonwealth of Kentucky in Deed Book 160, Page 544, and being 29.61' left of the centerline of the U.S. Highway 127 Approach Station Number 34-50.00 as shown on Highway Plans Number FD52 027 9167301R; NHPP 1271 (117), and being 41.8' northeast measured along the existing right-of-way of said U.S. Highway 127 from the southwest corner of said Lowhorn property;

Thence with the north right-of way line of said U.S. Highway 127 and the south line of said Lowhorn property for the next four (4) calls: (1) N 10°29'31" E - 104.32' to a point;

Thence (2) N 31°19'14" E - 185.91' to a point;

Thence (3) N 59°22'09" E - 271.31' to a point;

Thence (4) N 84°21'27" E - 156.89' to a set iron rod with a cap stamped "FStan 3282", and being the southwest corner of the Access & Utility Easement;

Thence leaving said U.S. Highway 127 and traversing said Lowhorn property with the perimeter of said Access & Utility Easement for the next five (5) calls: (1) N 04°36'13" E - 13.76' to a set iron rod with a cap stamped "FStan 3282";

Thence (2) along a curve to the left with a radius of 50.00' and a chord of N 10°35'25" W - 26.21' to a set iron rod with a cap stamped "FStan 3282";

Thence (3) N 25°47'03" W - 81.14' to a set iron rod with a cap stamped "FStan 3282";

Thence (4) N 90°00'00" W - 67.42' to a set iron rod with a cap stamped "FStan 3282";

Thence (5) N 00°00'00" W - 30.00' to a set iron rod with a cap stamped "FStan 3282", and being the southeast corner of the Lease Area;

Thence leaving said Access & Utility Easement with the west line of said Lease Area N 00°00'00" W - 25.32' to a set iron rod with a cap stamped "FStan 3282", and being the True Point of Beginning of the Utility Easement;

Thence leaving said Lease Area S 64°45'18" W - 105.55' to a set iron rod with a cap stamped "FStan 3282";

Thence S 64°41'26" W - 190.47' to a set iron rod with a cap stamped "FStan 3282";

Thence S 59°03'16" W - 131.60' to a set iron rod with a cap stamped "FStan 3282";

Thence S 35°49'59" W - 233.63' to a set iron rod with a cap stamped "FStan 3282";

Thence S 44°45'44" W - 19.15' to a set iron rod with a cap stamped "FStan 3282";

Thence N 45°14'16" W - 10.00' to a set iron rod with a cap stamped "FStan 3282";

Thence N 44°45'44" E - 18.37' to a set iron rod with a cap stamped "FStan 3282";

Thence N 35°49'59" E - 234.90' to a set iron rod with a cap stamped "FStan 3282";

Thence N 59°03'16" E - 134.15' to a set iron rod with a cap stamped "FStan 3282";

Thence N 64°41'26" E - 190.96' to a set iron rod with a cap stamped "FStan 3282";

Thence N 64°45'18" E - 110.27' to a set iron rod with a cap stamped "FStan 3282" on the west line of said Lease Area;

Thence with the west line of said Lease Area S 00°00'00" E - 11.06' to the point of beginning, containing 6,845.25 square feet as per survey by Frank L. Sellinger, II dated March 14, 2023.

PID: 016-00-00-012.01

Jerry Lynn & Frances Lowhorn
1406 Speck Rd
Albany KY 42602

Parcel Summary

Parcel Number	016-00-00-012.01
Account Number	97011
Location Address	HWY 127
Description	FARM ON HWY 127
	(Note: Not to be used on legal documents)
Class	FARM (20)
Tax District	00-County
Tax Rate	0.8352
Deed Book/Page	90-605

View Map

Owner Information

LOWHORN JERRY LYNN &
FRANCES
1406 SPECK RD
ALBANY, KY 42602

Layers | Map | Search | Comp Search | Sales Search | Sales List | Results | Comp Results | Sales Results | Report | Home

PID: 016-00-00-007.00

Hadley, Carvin Wildon & Donna
1080 Clifty Creek Rd
Jamestown KY 42629

Parcel Summary

Parcel Number	016-00-00-007.00
Account Number	96999
Location Address	SALT LICK RD
Description	CUMMINGS TRACK FARM ON SALT LICK RD
	(Note: Not to be used on legal documents)
Class	FARM (20)
Tax District	00-County
Tax Rate	0.8352
Deed Book/Page	160-276

View Map

Owner Information

HADLEY CARVIN WILDON &
DONNA
1080 CLIFTY CREEK RD
JAMESTOWN, KY 42629

Layers | Map | Search | Comp Search | Sales Search | Sales List | Results | Comp Results | Sales Results | Report | Home

PID: 016-00-00-009.00

Price, Joan & Janet Ballew
1715 Mansfield Lucas Rd
Mansfield OH 44903

Parcel Summary

Parcel Number	016-00-00-009.00
Account Number	97003
Location Address	141 MALONE RIDGE ROAD
Description	FARM OFF WELLS BOTTOM RD
	(Note: Not to be used on legal documents)
Class	FARM (20)
Tax District	00-County
Tax Rate	0.8352
Deed Book/Page	97-393

View Map

Owner Information

PRICE JOAN & JANET BALLEW
1715 MANSFIELD LUCAS RD
MANSFIELD, OH 44903

PID: 016-00-00-006.00

Jason Ballew / Michael James Ballew /
Timothy Joe Ballew
5754 Resik Dr
Huber Heights OH 45424

Layers | Map | Search | Comp Search | Sales Search | Sales List | Results | Comp Results | Sales Results | Report | Home

Parcel Summary

Parcel Number	016-00-00-006.00
Account Number	96998
Location Address	WELLS BOTTOM RD
Description	FARM ON WELLS BOTTOM RD
	(Note: Not to be used on legal documents)
Class	FARM (20)
Tax District	00-County
Tax Rate	0.8352
Deed Book/Page	

View Map

Owner Information

BALLEW JASON / BALLEW
MICHAEL JAMES BALLEW
TIMOTHY JOE
5754 RESIK DR
HUBER HEIGHTS, OH 45424

PID: 016-00-00-011.00

Ballew, Janet & Price, Joan
Ballew, Jerry
1715 Mansfield Lucas Rd
Mansfield OH 44903

Layers | Map | Search | Comp Search | Sales Search | Sales List | Results | Comp Results | Sales Results | Report | Home

Parcel Summary

Parcel Number	016-00-00-011.00
Account Number	97009
Location Address	OFF HWY 127 N
Description	FARM OFF HWY 127 N
	(Note: Not to be used on legal documents)
Class	FARM (20)
Tax District	00-County
Tax Rate	0.8352
Deed Book/Page	114-478

View Map

Owner Information

BALLEW JANET & PRICE JOAN
BALLEW JERRY
1715 MANSFIELD LUCAS RD
MANSFIELD, OH 44903

PID: 016-00-00-012.08

Melton, Lonnie
PO Box 603
Albany KY 42602

Layers | Map | Search | Comp Search | Sales Search | Sales List | Results | Comp Results | Sales Results | Report | Home

Parcel Summary

Parcel Number	016-00-00-012.08
Account Number	97018
Location Address	HWY 127
Description	TR 14 (R & T) ON HWY 127
	(Note: Not to be used on legal documents)
Class	RESIDENTIAL (10)
Tax District	00-County
Tax Rate	0.8352
Deed Book/Page	123-278

View Map

Owner Information

MELTON LONNIE
PO BOX 603
ALBANY, KY 42602

PID: 016-00-00-011.00

Gloria Gossage
PO Box 592
Burkesville KY 42717

Layers | Map | Search | Comp Search | Sales Search | Sales List | Results | Comp Results | Sales Results | Report | Home

Parcel Summary

Parcel Number	016-00-00-012.11
Account Number	97019
Location Address	OFF HWY 127
Description	TR 13 R&T & CUMBERLAND WAY EST
	(Note: Not to be used on legal documents)
Class	RESIDENTIAL (10)
Tax District	00-County
Tax Rate	0.8352
Deed Book/Page	144-46

View Map

Owner Information

GOSSAGE GLORIA
PO BOX 592
BURKESVILLE, KY 42717

PID: 016-00-00-012.00

Fuentes, Maria E & Campos, Paula
690 Bluebird Dr
Russell Springs KY 42642

Layers | Map | Search | Comp Search | Sales Search | Sales List | Results | Comp Results | Sales Results | Report | Home

Parcel Summary

Parcel Number	016-00-00-012.00
Account Number	97010
Location Address	HWY 127
Description	LOT 9-10-11 R& T PROPERTIES
	(Note: Not to be used on legal documents)
Class	RESIDENTIAL (10)
Tax District	00-County
Tax Rate	0.8352
Deed Book/Page	174-736

View Map

Owner Information

FUENTES MARIA E & CAMPOS
PAUL A
690 BLUEBIRD DR
RUSSELL SPRINGS , KY 42642

PID: 016-00-00-012.02

Haunted Rock Properties
PO Box 35
Albany KY 42602

Layers | Map | Search | Comp Search | Sales Search | Sales List | Results | Comp Results | Sales Results | Report | Home

Parcel Summary

Parcel Number	016-00-00-012.02
Account Number	97012
Location Address	HWY 127
Description	FARM ON HWY 127
	(Note: Not to be used on legal documents)
Class	FARM (20)
Tax District	00-County
Tax Rate	0.8352
Deed Book/Page	156-417

View Map

Owner Information

HAUNTED ROCK PROPERTIES
P O BOX 35
ALBANY, KY 42602

PID: 016-00-00-018.01

Aaron Lowhorn
7531 Welch Lake Dr
Mooresville IN 46158

Layers | Map | Search | Comp Search | Sales Search | Sales List | Results | Comp Results | Sales Results | Report | Home

Parcel Summary

Parcel Number	016-00-00-018.01
Account Number	97068
Location Address	N HWY 127
Description	FARM ON HWY 127
	(Note: Not to be used on legal documents)
Class	FARM (20)
Tax District	00-County
Tax Rate	0.8352
Deed Book/Page	134-321

View Map

Owner Information

LOWHORN AARON
7531 WELCH LAKE DR
MOORESVILLE, IN 46158

PID: 016-00-00-018.00

Newell Lowhorn
C/O Speck, Linda ET AL
77 McWhorter Rd
Albany KY 42602

Layers | Map | Search | Comp Search | Sales Search | Sales List | Results | Comp Results | Sales Results | Report | Home

Parcel Summary

Parcel Number	016-00-00-018.00
Account Number	97067
Location Address	US 127 NORTH
Description	FARM ON US 127 NORTH
	(Note: Not to be used on legal documents)
Class	FARM (20)
Tax District	00-County
Tax Rate	0.8352
Deed Book/Page	117-592

View Map

Owner Information

LOWHORN NEWELL C/O SPECK
LINDA ET AL
77 MCWHORTER RD
ALBANY, KY 42602

PID: 016-00-00-003.12

Jerry & Frances Lowhorn
1406 Speck Rd
Albany KY 42602

Layers | Map | Search | Comp Search | Sales Search | Sales List | Results | Comp Results | Sales Results | Report | Home

Parcel Summary

Parcel Number	016-00-00-003.12
Account Number	96993
Location Address	OFF HWY 127
Description	FARM OFF HWY 127 - TR 13 BOBBY WELL
	(Note: Not to be used on legal documents)
Class	FARM (20)
Tax District	00-County
Tax Rate	0.8352
Deed Book/Page	122-117

View Map

Owner Information

LOWHORN JERRY & FRANCES
1406 SPECK RD
ALBANY, KY 42602

PID: 016-00-00-003.10

Jerry & Frances Lowhorn
1406 Speck Rd
Albany KY 42602

Layers | Map | Search | Comp Search | Sales Search | Sales List | Results | Comp Results | Sales Results | Report | Home

Parcel Summary

Parcel Number	016-00-00-003.10
Account Number	96991
Location Address	OFF HWY 127
Description	FARM OFF HWY 127
	(Note: Not to be used on legal documents)
Class	FARM (20)
Tax District	00-County
Tax Rate	0.8352
Deed Book/Page	99-452

View Map

Owner Information

LOWHORN JERRY & FRANCES
1406 SPECK RD
ALBANY, KY 42602

PID: 016-00-00-020.00

Newell Lowhorn
C/O Speck, Linda ET AL
77 McWhorter Rd
Albany KY 42602

Layers | Map | Search | Comp Search | Sales Search | Sales List | Results | Comp Results | Sales Results | Report | Home

Parcel Summary

Parcel Number	016-00-00-020.00
Account Number	97069
Location Address	HWY 127
Description	FARM OFF HWY 127
	(Note: Not to be used on legal documents)
Class	FARM (20)
Tax District	00-County
Tax Rate	0.8352
Deed Book/Page	108-296

View Map

Owner Information

LOWHORN NEWELL C/O SPECK
LINDA ET AL
77 MCWHORTER RD
ALBANY, KY 42602

ClarkQuinn

www.clarkquinnlaw.com

Russell L. Brown
Attorney at Law
rbrown@clarkquinnlaw.com

320 N. Meridian St., Ste. 1100
Indianapolis, IN 46204
(317) 637-1321 main
(317) 687-2344 fax

February 6, 2025

Notice of Proposed Construction of
Wireless Communications Facility
Site Name: Agee Ridge

Cellco Partnership, d/b/a Verizon Wireless and TowerCom are filing an application with the Laurel County Planning Commission to construct a new wireless communications facility on a site located on the north side of Highway 127, approximately .9 mile east of Crow Creek Road / KY-3063, Albany, KY 42602, (North Latitude: (36° 50' 43.3", West Longitude 85° 11' 00.7"). The proposed facility will include a 255-foot tall tower, plus a 5 foot lightning arrestor for a total height of 260' and related ground facilities. This facility is needed to provide improved coverage for wireless communications in the area.

This notice is being sent to you because the County Property Valuation Administrator's records indicate that you may own property that is within a 500' radius of the proposed tower site or contiguous to the property on which the tower is to be constructed. You have a right to submit testimony to the Kentucky Public Service Commission ("PSC"), either in writing or to request intervention in the PSC's proceedings on the application. You may contact the PSC for additional information concerning this matter at: Kentucky Public Service Commission, Executive Director, 211 Sower Boulevard, P.O. Box 615, Frankfort, Kentucky 40602. Please refer to docket number 2025-00032 in any correspondence sent in connection with this matter.

We have attached a map showing the site location for the proposed tower. Applicant's radio frequency engineers assisted in selecting the proposed site for the facility, and they have determined it is the proper location and elevation needed to provide quality service to wireless customers in the area. Please feel free to contact us at 317-637-1321 if you have any comments or questions about this proposal.

Sincerely,
Russell L. Brown

Attorney for Applicant
RLB/mnw
enclosure

Vicinity Map

Location Maps

ClarkQuinn
ark, Quinn, Moses, Scott & Grahn, LLP

CERTIFIED MAIL

9589 0710 5270 1450 3480 84

FIRST-CLASS

US POSTAGE IMI PITNEY BOWES

ZIP 46204
02 7H
0006035028

$ 009.64⁰
FEB 06 2025

Jerry Lynn & Frances Lowhorn
1406 Speck Rd
Albany KY 42602

ClarkQuinn
ark, Quinn, Moses, Scott & Grahn, LLP

CERTIFIED MAIL

9589 0710 5270 1450 3480 91

FIRST-CLASS

US POSTAGE IMI PITNEY BOWES

ZIP 46204
02 7H
0006035028

$ 009.64⁰
FEB 06 2025

Hadley, Carvin Wildon & Donna
1080 Clifty Creek Rd
Jamestown KY 42629

ClarkQuinn
ark, Quinn, Moses, Scott & Grahn, LLP

CERTIFIED MAIL

9589 0710 5270 1450 3481 07

FIRST-CLASS

US POSTAGE IMI PITNEY BOWES

ZIP 46204
02 7H
0006035028

$ 009.64⁰
FEB 06 2025

Price, Joan & Janet Ballew
1715 Mansfield Lucas Rd
Mansfield OH 44903

ClarkQuinn
ark, Quinn, Moses, Scott & Grahn, LLP

CERTIFIED MAIL

9589 0710 5270 1450 3481 14

FIRST-CLASS

US POSTAGE PITNEY BOWES

ZIP 46204
02 7H
0006035028

$ 009.64⁰
FEB 06 2025

Jason Ballew / Michael James
Ballew / Timothy Joe Ballew
5754 Resik Dr
Huber Heights OH 45424

ClarkQuinn
ark, Quinn, Moses, Scott & Grahn, LLP

CERTIFIED MAIL

9589 0710 5270 1450 3481 21

FIRST-CLASS

US POSTAGE PITNEY BOWES

ZIP 46204
02 7H
0006035028

$ 009.64⁰
FEB 06 2025

Ballew, Janet & Price, Joan
Ballew, Jerry
1715 Mansfield Lucas Rd
Mansfield OH 44903

ClarkQuinn
ark, Quinn, Moses, Scott & Grahn, LLP

CERTIFIED MAIL

9589 0710 5270 1450 3481 38

FIRST-CLASS

US POSTAGE PITNEY BOWES

ZIP 46204
02 7H
0006035028

$ 009.64⁰
FEB 06 2025

Melton, Lonnie
PO Box 603
Albany KY 42602

ClarkQuinn
Clark, Quinn, Moses, Scott & Grahn, LLP

CERTIFIED MAIL

9589 0710 5270 1450 3481 45

FIRST-CLASS

US POSTAGE PITNEY BOWES

ZIP 46204
02 7H
0006035028

$ 009.64⁰

FEB 06 2025

Gloria Gossage
PO Box 592
Burkesville KY 42717

ClarkQuinn
Clark, Quinn, Moses, Scott & Grahn, LLP

CERTIFIED MAIL

9589 0710 5270 1450 3481 52

FIRST-CLASS

US POSTAGE PITNEY BOWES

ZIP 46204
02 7H
0006035028

$ 009.64⁰

FEB 06 2025

Fuentes, Maria E
& Campos, Paula
690 Bluebird Dr
Russell Springs KY 42642

ClarkQuinn
Clark, Quinn, Moses, Scott & Grahn, LLP

CERTIFIED MAIL

9589 0710 5270 1450 3481 69

FIRST-CLASS

US POSTAGE PITNEY BOWES

ZIP 46204
02 7H
0006035028

$ 009.64⁰

FEB 06 2025

Haunted Rock Properties
PO Box 35
Albany KY 42602

ClarkQuinn
Clark, Quinn, Moses, Scott & Grahn, LLP

CERTIFIED MAIL

9589 0710 5270 1450 3481 76

FIRST-CLASS

US POSTAGE PITNEY BOWES

ZIP 46204
02 7H
0006035028

$ 009.64⁰

FEB 06 2025

Aaron Lowhorn
7531 Welch Lake Dr
Mooresville IN 46158

ClarkQuinn
Clark, Quinn, Moses, Scott & Grahn, LLP

CERTIFIED MAIL

9589 0710 5270 1450 3486 40

FIRST-CLASS

US POSTAGE PITNEY BOWES

ZIP 46204
02 7H
0006035028

$ 009.64⁰

FEB 06 2025

Newell Lowhorn
C/O Speck, Linda ET AL
77 McWhorter Rd
Albany KY 42602

ClarkQuinn
Clark, Quinn, Moses, Scott & Grahn, LLP

CERTIFIED MAIL

9589 0710 5270 1450 3486 57

FIRST-CLASS

US POSTAGE PITNEY BOWES

ZIP 46204
02 7H
0006035028

$ 009.64⁰

FEB 06 2025

Jerry & Frances Lowhorn
1406 Speck Rd
Albany KY 42602

SENDER: *COMPLETE THIS SECTION*

- Complete items 1, 2, and 3.
- Print your name and address on the reverse so that we can return the card to you.
- Attach this card to the back of the mailpiece, or on the front if space permits.

1. Article Addressed to:

Jason Ballew / Michael James
Ballew / Timothy Joe Ballew
5754 Resik Dr
Huber Heights OH 45424

9590 9402 9104 4225 7041 83

2. Article Number *(Transfer from service label)*

9589 0710 5270 1450 3481 14

COMPLETE THIS SECTION ON DELIVERY

A. Signature

X

☐ Agent
☐ Addressee

B. Received by *(Printed Name)*

C. Date of Delivery

D. Is delivery address different from item 1? ☐ Yes
If YES, enter delivery address below: ☐ No

3. Service Type
☐ Adult Signature
☐ Adult Signature Restricted Delivery
☒ Certified Mail®
☐ Certified Mail Restricted Delivery
☐ Collect on Delivery
☐ Collect on Delivery Restricted Delivery
☐ Insured Mail
Mail Restricted Delivery
00)

☐ Priority Mail Express®
☐ Registered Mail™
☐ Registered Mail Restricte Delivery
☐ Signature Confirmation™
☐ Signature Confirmation Restricted Delivery

PS Form 3811, July 2020 PSN 7530-02-000-9053 Domestic Return Receipt

SENDER: *COMPLETE THIS SECTION*

- Complete items 1, 2, and 3.
- Print your name and address on the reverse so that we can return the card to you.
- Attach this card to the back of the mailpiece, or on the front if space permits.

1. Article Addressed to:

Aaron Lowhorn
7531 Welch Lake Dr
Mooresville IN 46158

9590 9402 9104 4225 7043 50

2. Article Number *(Transfer from service label)*

9589 0710 5270 1450 3481 76

COMPLETE THIS SECTION ON DELIVERY

A. Signature

X

☐ Agent
☐ Addressee

B. Received by *(Printed Name)*

C. Date of Delivery

D. Is delivery address different from item 1? ☐ Yes
If YES, enter delivery address below: ☐ No

3. Service Type
☐ Adult Signature
☐ Adult Signature Restricted Delivery
☒ Certified Mail®
☐ Certified Mail Restricted Delivery
☐ Collect on Delivery
☐ Collect on Delivery Restricted Delivery
☐ Insured Mail
Mail Restricted Delivery
00)

☐ Priority Mail Express®
☐ Registered Mail™
☐ Registered Mail Restricte Delivery
☐ Signature Confirmation™
☐ Signature Confirmation Restricted Delivery

PS Form 3811, July 2020 PSN 7530-02-000-9053 Domestic Return Receipt

SENDER: COMPLETE THIS SECTION

- Complete items 1, 2, and 3.
- Print your name and address on the reverse so that we can return the card to you.
- Attach this card to the back of the mailpiece, or on the front if space permits.

1. Article Addressed to:

Fuentes, Maria E
& Campos, Paula
690 Bluebird Dr
Russell Springs KY 42642

9590 9402 9104 4225 7043 74

2. Article Number (Transfer from service label)

9589 0710 5270 1450 3481 52

COMPLETE THIS SECTION ON DELIVERY

A. Signature
X Maria E Fuentes ☐ Agent ☒ Addressee

B. Received by (Printed Name) Maria E Fuentes
C. Date of Delivery 02.12.25

D. Is delivery address different from item 1? ☐ Yes
If YES, enter delivery address below: ☒ No

3. Service Type
☐ Adult Signature
☐ Adult Signature Restricted Delivery
☒ Certified Mail®
☐ Certified Mail Restricted Delivery
☐ Collect on Delivery
☐ Collect on Delivery Restricted Delivery
☐ Insured Mail
☐ Priority Mail Express®
☐ Registered Mail™
☐ Registered Mail Restricted Delivery
☐ Signature Confirmation™
☐ Signature Confirmation Restricted Delivery

PS Form 3811, July 2020 PSN 7530-02-000-9053 Domestic Return Receipt

---

SENDER: COMPLETE THIS SECTION

- Complete items 1, 2, and 3.
- Print your name and address on the reverse so that we can return the card to you.
- Attach this card to the back of the mailpiece, or on the front if space permits.

1. Article Addressed to:

Haunted Rock Properties
PO Box 35
Albany KY 42602

9590 9402 9104 4225 7043 67

2. Article Number (Transfer from service label)

9589 0710 5270 1450 3481 69

COMPLETE THIS SECTION ON DELIVERY

A. Signature
X Penny Dalton ☐ Agent ☐ Addressee

B. Received by (Printed Name)
C. Date of Delivery 2-11-25

D. Is delivery address different from item 1? ☐ Yes
If YES, enter delivery address below: ☐ No

3. Service Type
☐ Adult Signature
☐ Adult Signature Restricted Delivery
☒ Certified Mail®
☐ Certified Mail Restricted Delivery
☐ Collect on Delivery
☐ Collect on Delivery Restricted Delivery
☐ Insured Mail
☐ Priority Mail Express®
☐ Registered Mail™
☐ Registered Mail Restricted Delivery
☐ Signature Confirmation™
☐ Signature Confirmation Restricted Delivery

PS Form 3811, July 2020 PSN 7530-02-000-9053 Domestic Return Receipt

---

SENDER: COMPLETE THIS SECTION

- Complete items 1, 2, and 3.
- Print your name and address on the reverse so that we can return the card to you.
- Attach this card to the back of the mailpiece, or on the front if space permits.

1. Article Addressed to:

Had[redacted], Carvin Wildon & Donna
1080 [redacted]fty Creek Rd
Jame[redacted]wn KY 42629

9590 9402 9104 4225 7042 44

2. Article Number (Transfer from service label)

9589 0710 5270 1450 3480 91

COMPLETE THIS SECTION ON DELIVERY

A. Signature
X Hadley ☐ Agent ☐ Addressee

B. Received by (Printed Name)
C. Date of Delivery 2/11/25

D. Is delivery address different from item 1? ☐ Yes
If YES, enter delivery address below: ☐ No

3. Service Type
☐ Adult Signature
☐ Adult Signature Restricted Delivery
☒ Certified Mail®
☐ Certified Mail Restricted Delivery
☐ Collect on Delivery
☐ Collect on Delivery Restricted Delivery
☐ Insured Mail
☐ Priority Mail Express®
☐ Registered Mail™
☐ Registered Mail Restricted Delivery
☐ Signature Confirmation™
☐ Signature Confirmation Restricted Delivery

PS Form 3811, July 2020 PSN 7530-02-000-9053 Domestic Return Receipt

SENDER: COMPLETE THIS SECTION

- Complete items 1, 2, and 3.
- Print your name and address on the reverse so that we can return the card to you.
- Attach this card to the back of the mailpiece, or on the front if space permits.

1. Article Addressed to:

Newell Lowhorn
C/O Speck, Linda ET AL
77 McWhorter Rd
Albany KY 42602

9590 9402 9104 4225 7043 43

2. Article Number *(Transfer from service label)*

9589 0710 5270 1450 3486 40

PS Form 3811, July 2020 PSN 7530-02-000-9053

COMPLETE THIS SECTION ON DELIVERY

A. Signature
X Linda Speck ☐ Agent ☐ Addressee

B. Received by *(Printed Name)* C. Date of Delivery 2-11-25

D. Is delivery address different from item 1? ☐ Yes
If YES, enter delivery address below: ☐ No

3. Service Type
☐ Adult Signature
☐ Adult Signature Restricted Delivery
☒ Certified Mail®
☐ Certified Mail Restricted Delivery
☐ Collect on Delivery
☐ Collect on Delivery Restricted Delivery
☐ Insured Mail
d Mail Restricted Delivery
$500)
☐ Priority Mail Express®
☐ Registered Mail™
☐ Registered Mail Restricte Delivery
☐ Signature Confirmation™
☐ Signature Confirmation Restricted Delivery

Domestic Return Receipt

SENDER: COMPLETE THIS SECTION

- Complete items 1, 2, and 3.
- Print your name and address on the reverse so that we can return the card to you.
- Attach this card to the back of the mailpiece, or on the front if space permits.

1. Article Addressed to:

Melton, Lonnie
PO Box 603
Albany KY 42602

9590 9402 9104 4225 7041 69

2. Article Number *(Transfer from service label)*

9589 0710 5270 1450 3481 38

PS Form 3811, July 2020 PSN 7530-02-000-9053

COMPLETE THIS SECTION ON DELIVERY

A. Signature
X James R. Taylor ☐ Agent ☐ Addressee

B. Received by *(Printed Name)* C. Date of Delivery 2/11/25

D. Is delivery address different from item 1? ☐ Yes
If YES, enter delivery address below: ☐ No

3. Service Type
☐ Adult Signature
☐ Adult Signature Restricted Delivery
☒ Certified Mail®
☐ Certified Mail Restricted Delivery
☐ Collect on Delivery
☐ Collect on Delivery Restricted Delivery
Mail
Mail Restricted Delivery
00)
☐ Priority Mail Express®
☐ Registered Mail™
☐ Registered Mail Restricte Delivery
☐ Signature Confirmation™
☐ Signature Confirmation Restricted Delivery

Domestic Return Receipt

SENDER: COMPLETE THIS SECTION

- Complete items 1, 2, and 3.
- Print your name and address on the reverse so that we can return the card to you.
- Attach this card to the back of the mailpiece, or on the front if space permits.

1. Article Addressed to:

Jerry Lynn & Frances Lowhorn
1406 Speck Rd
Albany KY 42602

9590 9402 9104 4225 7042 51

2. Article Number *(Transfer from service label)*

9589 0710 5270 1450 3480 84

COMPLETE THIS SECTION ON DELIVERY

A. Signature
X Frances Lowhorn
☐ Agent
☐ Addressee

B. Received by *(Printed Name)*

C. Date of Delivery
02/12/2

D. Is delivery address different from item 1? ☐ Yes
If YES, enter delivery address below: ☐ No

3. Service Type
☐ Adult Signature
☐ Adult Signature Restricted Delivery
☒ Certified Mail®
☐ Certified Mail Restricted Delivery
☐ Collect on Delivery
☐ Collect on Delivery Restricted Delivery
☐ Insured Mail
Mail Restricted Delivery
00)
☐ Priority Mail Express®
☐ Registered Mail™
☐ Registered Mail Restricte Delivery
☐ Signature Confirmation™
☐ Signature Confirmation Restricted Delivery

PS Form 3811, July 2020 PSN 7530-02-000-9053 Domestic Return Receipt

SENDER: COMPLETE THIS SECTION

- Complete items 1, 2, and 3.
- Print your name and address on the reverse so that we can return the card to you.
- Attach this card to the back of the mailpiece, or on the front if space permits.

1. Article Addressed to:

Jerry & Frances Lowhorn
1406 Speck Rd
Albany KY 42602

9590 9402 9104 4225 6971 95

2. Article Number *(Transfer from service label)*

9589 0710 5270 1450 3486 57

COMPLETE THIS SECTION ON DELIVERY

A. Signature
X Frances Lowhorn
☐ Agent
☐ Addressee

B. Received by *(Printed Name)*

C. Date of Delivery
02/12/25

D. Is delivery address different from item 1? ☐ Yes
If YES, enter delivery address below: ☐ No

3. Service Type
☐ Adult Signature
☐ Adult Signature Restricted Delivery
☒ Certified Mail®
☐ Certified Mail Restricted Delivery
☐ Collect on Delivery
☐ Collect on Delivery Restricted Delivery
☐ Insured Mail
Mail Restricted Delivery
00)
☐ Priority Mail Express®
☐ Registered Mail™
☐ Registered Mail Restricte Delivery
☐ Signature Confirmation™
☐ Signature Confirmation Restricted Delivery

PS Form 3811, July 2020 PSN 7530-02-000-9053 Domestic Return Receipt

USPS Tracking®

FAQs >

Remove ×

Tracking Number:

9589071052701450348145

Copy Add to Informed Delivery (https://informeddelivery.usps.com/)

Latest Update

Your package is moving within the USPS network and is on track to be delivered to its final destination. It is currently in transit to the next facility.

Get More Out of USPS Tracking:

USPS Tracking Plus®

Feedback

Moving Through Network

In Transit to Next Facility

February 19, 2025

Moved, Left no Address

BURKESVILLE, KY 42717
February 10, 2025, 1:57 pm

See All Tracking History

What Do USPS Tracking Statuses Mean? (https://faq.usps.com/s/article/Where-is-my-package)

Text & Email Updates ∨

USPS Tracking Plus® ∨

Product Information ∨

See Less ∧

Track Another Package

Enter tracking or barcode numbers

Need More Help?

Contact USPS Tracking support for further assistance.

FAQs

USPS Tracking®

FAQs >

Remove ×

Tracking Number:

9589071052701450348107

Copy Add to Informed Delivery (https://informeddelivery.usps.com/)

Latest Update

Your item could not be delivered on February 25, 2025 at 6:18 pm in MANSFIELD, OH 44901. It was held for the required number of days and is being returned to the sender.

Get More Out of USPS Tracking:

USPS Tracking Plus®

Feedback

Alert

Unclaimed/Being Returned to Sender

MANSFIELD, OH 44901
February 25, 2025, 6:18 pm

Reminder to Schedule Redelivery of your item

February 15, 2025

See All Tracking History

What Do USPS Tracking Statuses Mean? (https://faq.usps.com/s/article/Where-is-my-package)

Text & Email Updates ∨

USPS Tracking Plus® ∨

Product Information ∨

See Less ∧

Track Another Package

Enter tracking or barcode numbers

Need More Help?

Contact USPS Tracking support for further assistance.

FAQs

USPS Tracking®

FAQs >

Remove ×

Tracking Number:

9589071052701450348121

Copy Add to Informed Delivery (https://informeddelivery.usps.com/)

Latest Update

Your item could not be delivered on February 25, 2025 at 6:18 pm in MANSFIELD, OH 44901. It was held for the required number of days and is being returned to the sender.

Get More Out of USPS Tracking:

USPS Tracking Plus®

Feedback

Alert

Unclaimed/Being Returned to Sender

MANSFIELD, OH 44901
February 25, 2025, 6:18 pm

Reminder to Schedule Redelivery of your item

February 15, 2025

See All Tracking History

What Do USPS Tracking Statuses Mean? (https://faq.usps.com/s/article/Where-is-my-package)

Text & Email Updates ∨

USPS Tracking Plus® ∨

Product Information ∨

See Less ∧

Track Another Package

Enter tracking or barcode numbers

Need More Help?

Contact USPS Tracking support for further assistance.

FAQs

ClarkQuinn

www.clarkquinnlaw.com

Russell L. Brown
Attorney at Law
rbrown@clarkquinnlaw.com

320 N. Meridian St., Ste. 1100
Indianapolis, IN 46204
(317) 637-1321 main
(317) 687-2344 fax

February 21, 2025

Notice of Proposed Construction of
Wireless Communications Facility
Site Name: Agee Ridge

Cellco Partnership, d/b/a Verizon Wireless and TowerCom propose construct a new wireless communications facility on a site located on the north side of Highway 127, approximately .9 mile east of Crow Creek Road / KY-3063, Albany, KY 42602, (North Latitude: (36° 50' 43.3", West Longitude 85° 11' 00.7"). The proposed facility will include a 255-foot tall tower, plus a 5 foot lightning arrestor for a total height of 260' and related ground facilities. This facility is needed to provide improved coverage for wireless communications in the area.

This notice is being sent to you because the County Property Valuation Administrator's records indicate that you may own property that is within a 500' radius of the proposed tower site or contiguous to the property on which the tower is to be constructed. You have a right to submit testimony to the Kentucky Public Service Commission ("PSC"), either in writing or to request intervention in the PSC's proceedings on the application. You may contact the PSC for additional information concerning this matter at: Kentucky Public Service Commission, Executive Director, 211 Sower Boulevard, P.O. Box 615, Frankfort, Kentucky 40602. Please refer to docket number 2025-00032 in any correspondence sent in connection with this matter.

We have attached a map showing the site location for the proposed tower. Applicant's radio frequency engineers assisted in selecting the proposed site for the facility, and they have determined it is the proper location and elevation needed to provide quality service to wireless customers in the area. Please feel free to contact us at 317-637-1321 if you have any comments or questions about this proposal.

Sincerely,
Russell L. Brown

Attorney for Applicant
RLB/mnw
enclosure

Vicinity Map

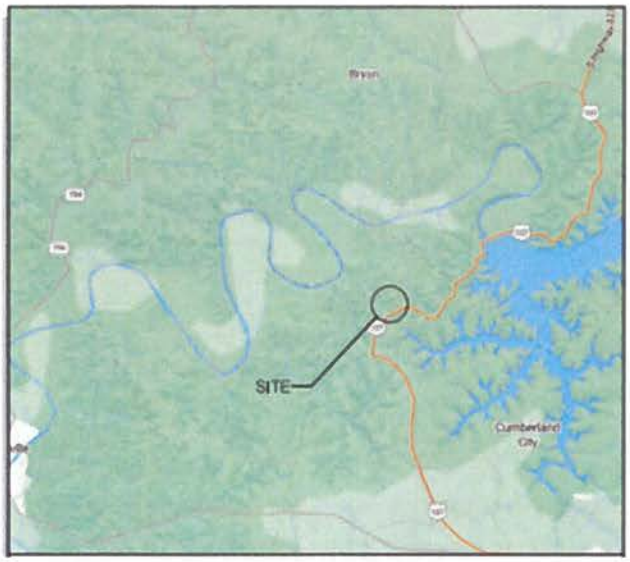

Location Maps

ClarkQuinn
ark, Quinn, Moses, Scott & Grahn, LLP

9589 0710 5270 1450 3486 64

FIRST-CLASS

US POSTAGE IMI PITNEY BOWES

ZIP 46204
02 7H
0006035028

$ 009.64⁰
FEB 21 2025

Ballew, Janet & Price, Joan
Ballew, Jerry
1715 Mansfield Lucas Rd
Mansfield OH 44903

CERTIFIED MAIL®

ClarkQuinn
ark, Quinn, Moses, Scott & Grahn, LLP

9589 0710 5270 1450 3486 71

FIRST-CLASS

US POSTAGE IMI PITNEY BOWES

ZIP 46204
02 7H
0006035028

$ 009.64⁰
FEB 21 2025

Gloria Gossage
PO Box 592
Burkesville KY 42717

CERTIFIED MAIL®

ClarkQuinn
lark, Quinn, Moses, Scott & Grahn, LLP

9589 0710 5270 1450 3486 88

FIRST-CLASS

US POSTAGE IMI PITNEY BOWES

ZIP 46204
02 7H
0006035028

$ 009.64⁰
FEB 21 2025

Price, Joan & Janet Ballew
1715 Mansfield Lucas Rd
Mansfield OH 44903

USPS Tracking®

FAQs >

Remove ×

Tracking Number:

9589071052701450348688

Copy Add to Informed Delivery (https://informeddelivery.usps.com/)

Latest Update

Your item was delivered to an individual at the address at 3:31 pm on February 24, 2025 in MANSFIELD, OH 44903.

Get More Out of USPS Tracking:

USPS Tracking Plus®

Feedback

Delivered

Delivered, Left with Individual

MANSFIELD, OH 44903
February 24, 2025, 3:31 pm

See All Tracking History

What Do USPS Tracking Statuses Mean? (https://faq.usps.com/s/article/Where-is-my-package)

Text & Email Updates

USPS Tracking Plus®

Product Information

See Less ^

Track Another Package

Enter tracking or barcode numbers

Need More Help?

Contact USPS Tracking support for further assistance.

FAQs

USPS Tracking®

FAQs >

Remove ✕

Tracking Number:

9589071052701450348664

Copy Add to Informed Delivery (https://informeddelivery.usps.com/)

Latest Update

Your item was delivered to an individual at the address at 3:31 pm on February 24, 2025 in MANSFIELD, OH 44903.

Get More Out of USPS Tracking:

USPS Tracking Plus®

Feedback

Delivered

Delivered, Left with Individual

MANSFIELD, OH 44903
February 24, 2025, 3:31 pm

See All Tracking History

What Do USPS Tracking Statuses Mean? (https://faq.usps.com/s/article/Where-is-my-package)

Text & Email Updates ∨

USPS Tracking Plus® ∨

Product Information ∨

See Less ∧

Track Another Package

Enter tracking or barcode numbers

Need More Help?

Contact USPS Tracking support for further assistance.

FAQs

USPS Tracking®

FAQs >

Remove ✕

Tracking Number:

9589071052701450348671

Copy Add to Informed Delivery (https://informeddelivery.usps.com/)

Latest Update

Your item was refused by the addressee at 10:42 am on February 25, 2025 in BURKESVILLE, KY 42717 and is being returned to the sender.

Get More Out of USPS Tracking:

USPS Tracking Plus®

Feedback

Alert

Refused

BURKESVILLE, KY 42717
February 25, 2025, 10:42 am

Available for Pickup

BURKESVILLE
120 N MAIN ST
BURKESVILLE KY 42717-9998
M-F 0830-1545; SAT 1000-1130
February 24, 2025, 8:59 am

See All Tracking History

What Do USPS Tracking Statuses Mean? (https://faq.usps.com/s/article/Where-is-my-package)

Text & Email Updates

USPS Tracking Plus®

Product Information

See Less

Track Another Package

Enter tracking or barcode numbers

Need More Help?

Contact USPS Tracking support for further assistance.

FAQs

ClarkQuinn

www.clarkquinnlaw.com

Russell L. Brown
Attorney at Law
rbrown@clarkquinnlaw.com

320 N. Meridian St., Ste. 1100
Indianapolis, IN 46204
(317) 637-1321 main
(317) 687-2344 fax

February 6, 2025

Via Certified Mail, Return Receipt Requested
9589 0710 5270 1450 3480 77

Hon. Ricky L. Craig
Clinton County Judge Executive
100 South Cross Street
Albany, KY 42602

RE: Notice of Proposal to Construct Wireless Communications Facility
Kentucky Public Service Commission Docket No. 2025-00032
Site Name: Agee Ridge

Dear Judge Craig:

Cellco Partnership, d/b/a Verizon Wireless and TowerCom are filing an application with the Laurel County Planning Commission to construct a new wireless communications facility on a site located on the north side of Highway 127, approximately .9 mile east of Crow Creek Road / KY-3063, Albany, KY 42602, (North Latitude: (36° 50' 43.3", West Longitude 85° 11' 00.7"). The proposed facility will include a 255-foot tall tower, plus a 5 foot lightning arrestor for a total height of 260' and related ground facilities. This facility is needed to provide improved coverage for wireless communications in the area.

You have a right to submit comments to the PSC or to request intervention in the PSC's proceedings on the application. You may contact the PSC at: Executive Director, Public Service Commission, 211 Sower Boulevard, P.O. Box 615, Frankfort, Kentucky 40602. Please refer to docket number 2025-00032 in any correspondence sent in connection with this matter.

We have attached a map showing the site location for the proposed tower. Verizon Wireless' radio frequency engineers assisted in selecting the proposed site for the facility, and they have determined it is the proper location and elevation needed to provide quality service to wireless customers in the area. Please feel free to contact us with any comments or questions you may have.

Sincerely,
Russell L. Brown

Attorney for Applicant

Vicinity Map

Location Maps

CERTIFIED MAIL®

ClarkQuinn
ark, Quinn, Moses, Scott & Grahn, LLP

9589 0710 5270 1450 3480 77

FIRST-CLASS

US POSTAGE IMI PITNEY BOWES

ZIP 46204
02 7H
0006035028

$ 009.64⁰
FEB 06 2025

Hon. Ricky L. Craig
Clinton County Judge Executive
100 South Cross Street
Albany, KY 42602

SENDER: *COMPLETE THIS SECTION*

- Complete items 1, 2, and 3.
- Print your name and address on the reverse so that we can return the card to you.
- Attach this card to the back of the mailpiece, or on the front if space permits.

1. Article Addressed to:

Hon. Ricky L. Craig
Clinton County Judge Executive
100 South Cross Street
Albany, KY 42602

9590 9402 9104 4225 6970 89

2. Article Number *(Transfer from service label)*

9589 0710 5270 1450 3480 77

COMPLETE THIS SECTION ON DELIVERY

A. Signature

X Ricky Craig

☐ Agent
☐ Addressee

B. Received by *(Printed Name)* Ricky Craig

C. Date of Delivery 2/11

D. Is delivery address different from item 1? ☐ Yes
If YES, enter delivery address below: ☐ No

3. Service Type

☐ Adult Signature
☐ Adult Signature Restricted Delivery
☒ Certified Mail®
☐ Certified Mail Restricted Delivery
☐ Collect on Delivery
☐ Collect on Delivery Restricted Delivery
☐ Insured Mail
☐ Insured Mail Restricted Delivery (over $500)

☐ Priority Mail Express®
☐ Registered Mail™
☐ Registered Mail Restricted Delivery
☐ Signature Confirmation™
☐ Signature Confirmation Restricted Delivery

PS Form 3811, July 2020 PSN 7530-02-000-9053 Domestic Return Receipt

SITE NAME: AGEE RIDGE
NOTICE SIGNS

The signs are at least (2) feet by four (4) feet in size, of durable material, with the text printed in black letters at least one (1) inch in height against a white background, except for the word **"tower,"** which is at least four (4) inches in height.

Cellco Partnership, d/b/a Verizon Wireless and TowerCom propose to construct a telecommunications **tower** on this site. If you have questions, please contact Clark, Quinn, Moses, Scott & Grahn, LLP, 320 N. Meridian Street, Indianapolis, IN 46204; 317-637-1321, or the Executive Director, Public Service Commission, 211 Sower Boulevard, PO Box 615, Frankfort, Kentucky 40602. Please refer to docket number 2025-00032 in your correspondence.

Cellco Partnership, d/b/a Verizon Wireless and TowerCom propose to construct a telecommunications **tower** on this site. If you have questions, please contact Clark, Quinn, Moses, Scott & Grahn, LLP, 320 N. Meridian Street, Indianapolis, IN 46204; 317-637-1321, or the Executive Director, Public Service Commission, 211 Sower Boulevard, PO Box 615, Frankfort, Kentucky 40602. Please refer to docket number 2025-00032 in your correspondence.

ClarkQuinn
Clark, Quinn, Moses, Scott & Grahn, LLP

Robert B. Scott
Charles R. Grahn
Frank D. Otte*
John "Bart" Herriman
William W. Gooden**
Michael P. Maxwell
Russell L. Brown**†
Jennifer F. Perry
Keith L. Beall
N. Davey Neal
Travis W. Cohron
Maggie L. Sadler
Kristin A. McIlwain
Olivia A. Hess

Land Use Consultant
Elizabeth Bentz Williams, AICP

*Also admitted in Montana
†Also admitted in Kentucky
**
Registered Civil Mediator

VIA EMAIL: gpcompany@kih.net

Clinton County News
116 N. Washington St
P.O. Box 360
Albany, KY 42602

RE: Legal Notice Advertisement
Site Name: Agee Ridge

To Whom It May Concern,

Please publish the following legal notice advertisement in the next available edition of the Clinton County News Publication:

NOTICE

Cellco Partnership, d/b/a Verizon Wireless and TowerCom propose to construct a new wireless communications facility on a site located on the north side of Highway 127, approximately .9 mile east of Crow Creek Road / KY-3063, Albany, KY 42602, (North Latitude: (36° 50' 43.3", West Longitude 85° 11' 00.7"). The proposed facility will include a 255-foot tall tower, plus a 5 foot lightning arrestor for a total height of 260' and related ground facilities. You have a right to submit comments to the PSC or to request intervention in the PSC's proceedings on the application. You may contact the PSC at: Executive Director, Public Service Commission, 211 Sower Boulevard, P.O. Box 615, Frankfort, Kentucky 40602. Please refer to docket number 2025-00032 in any correspondence sent in connection with this matter.

After this advertisement has been published, please forward a tearsheet copy, affidavit of publication, and invoice to Clark, Quinn, Moses, Scott & Grahn, LLC, 320 N. Meridian Street, Indianapolis, IN 46204 or by email to ebw@clarkquinnlaw.com. Please call me on my cell with any questions at 317-902-2187 if you have any questions. Thank you for your assistance.

Sincerely,

Elizabeth Bentz Williams, AICP

SARF Map

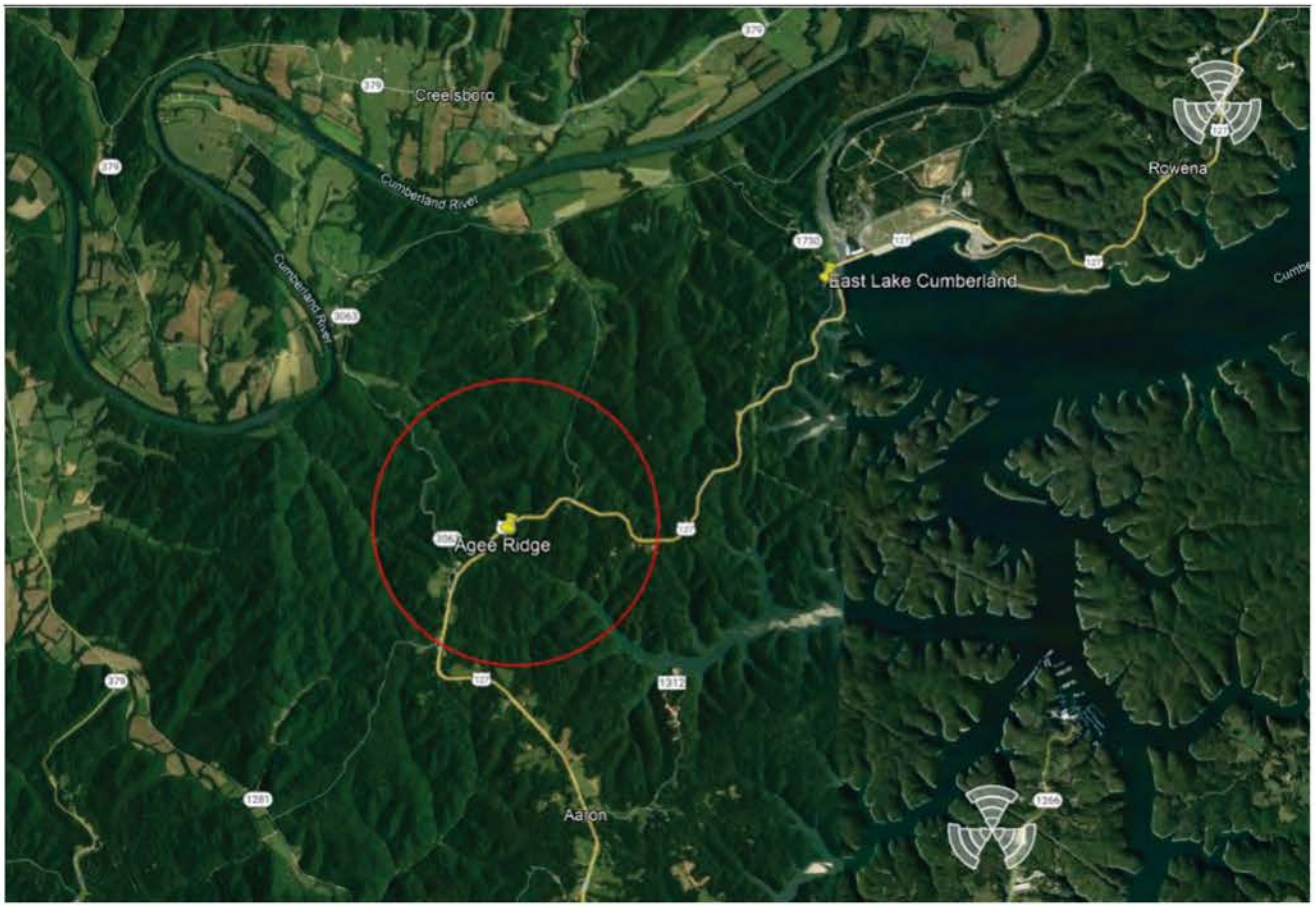
Creelsboro
Cumberland River
Cumberland River
Rowena
East Lake Cumberland
Agee Ridge
Aaron

verizon

January 30, 2024

RE: Proposed Cellco Partnership d/b/a Verizon Wireless Communications
Facility Site Name: CK Agee Ridge
Type of Tower: 255ft. Self-Support Lattice
Location: 1607 Harry King Rd, Glasgow, KY 42141

To Whom It May Concern:

As a radio frequency engineer for Verizon Wireless, I am providing this letter to state the need for a Verizon Wireless site called, CK Agee Ridge.

The CK Agee Ridge site is proposed with the below objectives:

1. To improve service along Route 127.
2. To offload existing traffic of existing Verizon sites in this area.

Currently the area is experiencing poor service along Route 127. There is a high demand for wireless high-speed data and phone service in this aera. This tower is needed to provide all Verizon customers in the area with the best experience on their wireless devices.

Raw Land – Design plans for a new tower would provide overall tower height of 255' with a Verizon Wireless Centerline of 250'. The new structure height was decided upon to best cover Route 127, and to offload traffic from the nearby existing Verizon sites. If we are limited to building a structure less than the proposed height, another tower would be needed in the vicinity in the near future. In addition, building a structure that is too short can cause existing taller sites to cover over the proposed site and building a site that is too tall can cause the proposed site to shoot over existing sites. Both situations create a poor experience from a user perspective. The new structure is proposed to be placed near the center of the problem area. The new tower design solves the stated objectives.

Verizon Wireless cares about the communities as well as the environment and prefers to collocate on existing structures when available. Verizon Wireless is currently collocated on some existing structures in the area. We prefer collocation due to reduced construction costs, faster deployment, and environment protection. However, Verizon Wireless was unable to find a suitable structure within the center of demand area to collocate the proposed site.

verizon

Verizon Wireless design engineers establish search area criteria in order to effectively meet coverage objectives as well as offload existing Verizon cell sites. When met, the criterion also reduces the need for a new site to cover the area in the immediate future. Each cellular site covers a limited area, depending on site configuration and the surrounding terrain. Cell sites are built in an interconnected network; which means each cell site must be located so that their respective coverage areas are contiguous. This provides uninterrupted communications throughout the coverage area.

Since collocation is generally the most cost-effective means for prompt deployment of new facilities, Verizon Wireless makes every effort to investigate the feasibility for using existing towers or other tall structures for collocation when designing a new site or system expansion. However, collocation on an existing tower or tall structure is not always feasible due to location of existing cell sites. Cell sites are placed in a way so they provide smooth hand off to each other and are placed at some distance from each other to eliminate too much overlap. Too much overlap may result in a waste of resources and raise a system capacity overload concern.
This cell site has been designed, and shall be constructed and operated in a manner that satisfies regulations and requirements of all applicable governmental agencies that have been charged with regulating tower specifications, operation, construction, and placement, including the FAA and FCC.

Sincerely,

Steven Belcher
Sr RF Engineer
Verizon Wireless

Notary
Christina Renee Pantoja
Exp. 5/17/26
Commission Number KYNP51106

CHRISTINA RENEE PANTOJA
Notary Public
Commonwealth of Kentucky
Commission Number KYNP51106
My Commission Expires May 17, 2026

January 30, 2024

RE: Zoning Plots

Site Name: CK Agee Ridge

To Whom It May Concern:

This map is not a guarantee of coverage and may contain areas with no service. This map reflects a depiction of predicted and approximate wireless coverage of the network and is intended to provide a relative comparison of coverage. The depictions of coverage do not guarantee service availability as there are many factors that can influence coverage and service availability. These factors vary from location to location and change over time. The coverage areas may include locations with limited or no coverage. Even within a coverage area shown, there are many factors, including but not limited to, usage volumes, outages, customer's equipment, terrain, proximity to buildings, foliage, and weather that may impact service.

Sincerely,

Steven Belcher
Sr RF Engineer
Verizon Wireless

verizon

Current Coverage - Without proposed site CK Agee Ridge

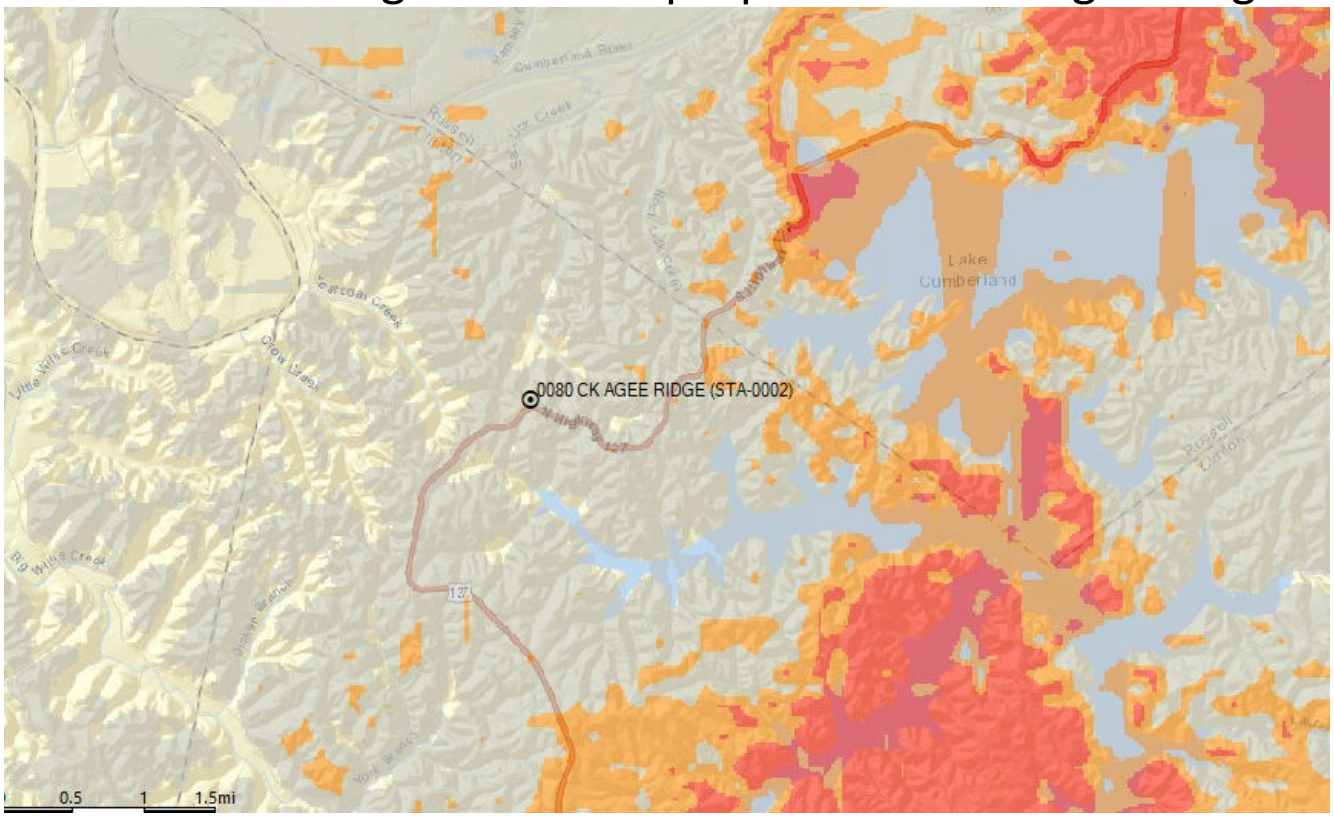

Good
Better
Best

verizon

Coverage - With proposed site CK Agee Ridge

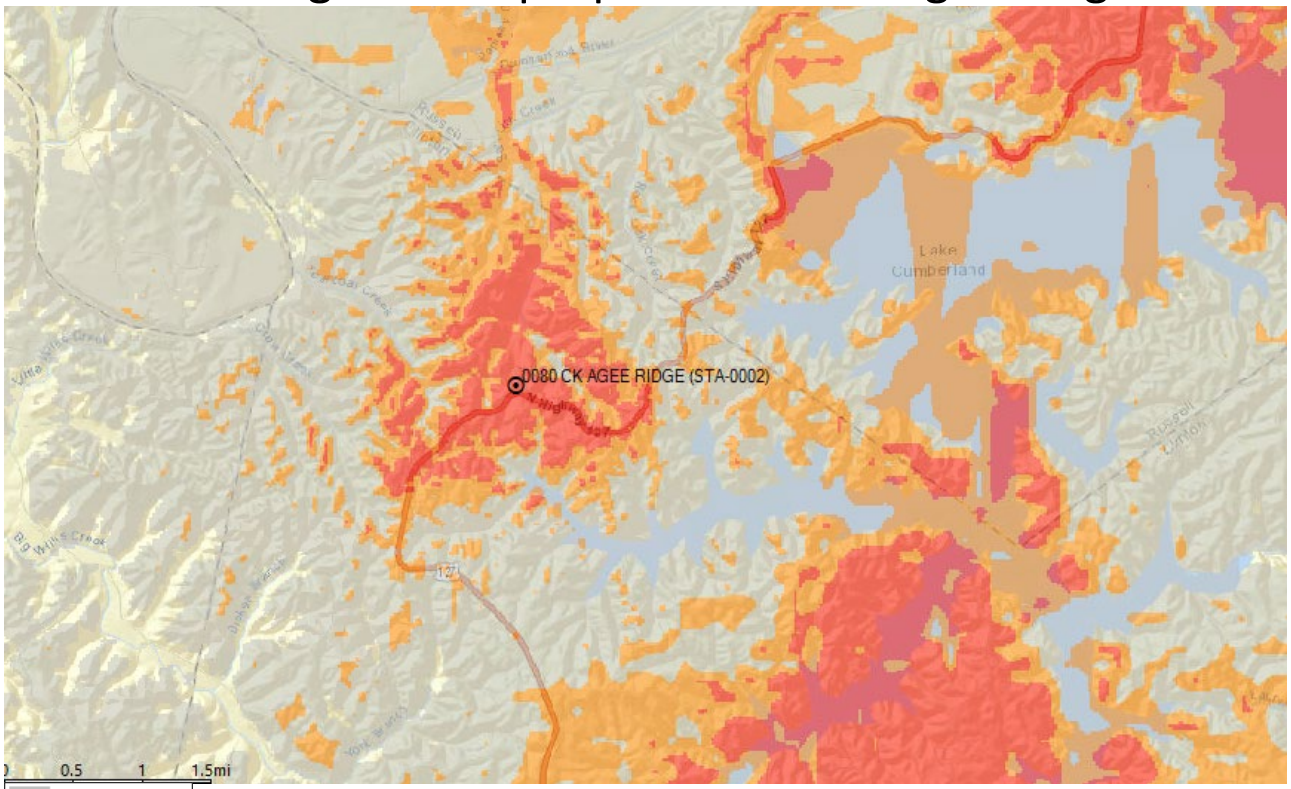

Good
Better
Best

Exhibit S
List and Identity and Qualifications of Professionals

Peter Lichomski
Professional Engineer
Kentucky License 7530
LAB
49030 Pontiac Trail, Ste. 100
Wixon, MI, 48393

Frank L. Sellinger
Professional Land Surveyor
Kentucky License 3282
FSTAN
1012 S 4th St., Ste. 101
Louisville, KY 40203

Keith J. Tindall
Professional Engineer
Kentucky License 20897
Sabre Industries
7101 Southbridge Drive
PO Box 658
Sioux City, IA 51102

Joseph V. Borrelli, Jr.
Professional Engineer
Kentucky License 30809
Delta Oaks Group
4904 Professional Cour, Second Floor
Raleigh, NC 27609

Jinay Vascocu
Director of Site Development
TowerCom
241 Atlantic Blvd., Ste. 201
Neptune Beach, FL 32266

Steven Belcher
Senior RF Engineer
Verizon Wireless
2421 Holloway Road
Louisville, KY 40299

STATE OF INDIANA)
) SS:
COUNTY OF MARION)

AFFIDAVIT OF CERTIFICATION
COMMONWEALTH OF KENTUCKY
PUBLIC SERVICE COMMISSION

I Russell L. Brown, attorney for Cellco Partnership, d/b/a Verizon Wireless and The Towers, LLC hereby certify that as the person supervising the preparation of this application and all statements and information contained herein are true and accurate to the best of that person's knowledge, information, and belief formed after a reasonable inquiry for all information within this application.

Russell L. Brown
Attorney, for Cellco Partnership, d/b/a Verizon Wireless
And The Towers, LLC

STATE OF INDIANA,
COUNTY OF MARION, SS:
Subscribed and sworn to before me this 26th day of February, 2025.

Notary Public
Printed Name of Notary: Elizabeth Bentz Williams
My commission expires: November 18, 2028
My County of Residence: Marion
Commission #: 0639620