# McKINNEY WATER DISTRICT

## WATER LOSS INVESTIGATION AND RESPONSE

**AGE ENGINEERING SERVICES INC**

October 26, 2023

by: Luther Galloway, PE, PLS

# Table of Contents


| | Page |
|---|---|
| Introduction …….. | 1 |
| Statement of Challenge, Goals, and Objectives …….. | 1 |
| Condition of Existing Facilities ……. | 3 |
| Water Usage Accounting ……. | 4 |
| Operations Targeting Water Loss …….. | 9 |
| Capital Expenditures Targeting Water Loss …… | 11 |
| Capital Opinion of Cost ……. | 13 |
| Capital Opinion of Cost Water Loss Surcharge …… | 14 |

| APPENDICES: | | Page |
|---|---|---|
| Proposed Capital Improvements Project Phase 1B ……. | Appendix A | 15 |
| Water Purchase and Use October 2022 to September 2023 ……. | Appendix B | 20 |
| Master and Check (Test) Meter Locations ……. | Appendix C | 22 |
| Water Loss Ongoing Maintenance …… | Appendix D | 24 |
| Phase 3 Project Pre Application …… | Appendix E | 26 |
| Water Loss Test Meter Analysis Form …… | Appendix F | 29 |
| Typical Pressure Reducer and Inline Meter ……. | Appendix G | 32 |
| Water System Map Meter and Equipment Locations …… | Attachment Sheet 1 | |

# McKINNEY WATER DISTRICT

## WATER LOSS INVESTIGATION AND RESPONSE

**INTRODUCTION:**

The overriding problem the McKinney Water District faces is the inability to generate enough funds from the operation of the water system to make major capital improvements. This is primarily due to a declining agricultural economy and a significant portion of the system customers existing below the poverty level. Recent CDBG income survey indicated a 65% low to moderate income level in the system customers. Little to no upgrades of the original water system, now 55 years old, have been made to this date.

McKinney Water District (MWD) is located in Lincoln County, Kentucky and primarily serves the south and south-west section of Lincoln County. Some small additional areas include around Rowland, Stanford, Ottenheim, Maywood and a small piece of Casey County.

The McKinney Water District began in 1965 with the McKinney Water District and in 1972 with the McKinney Water Association. In 1986 the two merged into the MWD as it is now. From the beginning the District has been aggressive in extending water mains to the rural portions of Lincoln County and as a result is serving a significant rural section of the County. That aggressive expansion policy has led to an increase in the customer count from 180 in 1973 to 2,308 in 2019. The District serves such name places as McKinney, Geneva, Turnersville, Mt Salem, New Salem, South Fork, Yocum, Jumbo, Miracle, Chicken Bristle, Blue Lick, Boneyville, Neals Creek, Maywood, Roland and Ottenheim.

A significant portion of the original water main system was installed in the 1960's and was installed with asbestos cement piping. Also the current water towers in the McKinney area are two stand pipe tanks built in 1966. Both are reaching the end of their useful life and are major contributors to the water quality issues they District is having. In the 1990's the District expanded water service on the East side of Stanford in the Roland area, as well as service in the Ottenheim area. Stanford and Eubank respectively supply water to these master meters.

**Statement of Challenges, Goals, and Objectives:**

The McKinney Water District is a drinking water system which has developed over the last 58 years to the point where it serves the majority of the rural portions of Lincoln County. The system is presently in a condition that allowed an unaccounted water loss of 35.7% in 2021. In the previous water loss Plan the water loss was reduced to 16.7% in 2012. In a record review the District reported a water loss of 14% in 1997. One of the issues with the McKinney water system is the length of pipes that is used to serve the customers. The system has a very low density of customers outside of McKinney and a few very small rural

communities. This means that everything the District does require distances to be overcome to accomplish the tasks. This of course includes finding water loss in the water mains and customer services. Since 1997 the district has added more than 35 miles of water mains. The system currently has 676,436 feet (128 miles see table 4 for more details) of water mains. The system has six master meters purchasing water from the Cities of Stanford and Eubank. The system serves 2308 water customers. This is an average 293 feet of water main for each metered customer.

Another of the issues with any water system is the water that flows through the customer water meters and are not measured. This can be due to failing of slow meters but also very low flow that is not enough to turn the meter measuring device. This low flow amount can be significant in that one meter can under register water consumption at 1/8$^{th}$ gpm for a one month total of up to 5,400 gallons per month. Research has shown that unregistered low flows can be shown to be as much as 25% of the meters in use. This can be particularly troublesome when the low flow occurs on a continuous basis like a dripping faucet.

The 7 year average water usage from the City of Stanford was 247,317 gpd at a rate of $2.99 per 1,000 g, and from the City Eubank was 72,164 gpd at a rate of $3.60 per 1,000 g. The effective combined purchase price was $3.15 per 1,000 g. The cost of the water loss at 35.7% was $359.27 per day or $131,134 per year based on 7 year average water usage.

The 2022 water purchases for the Cities is 310,795 gpd at $3.23 per 1,000 g from Stanford and 74.341 gpd at $3.60 per 1,000 g from Eubank. The system water loss for each City is 39.31% for Stanford and 9.51% for Eubank. The cost of lost water for each is $394.62 for Stanford and $25.45 for Eubank each day. This is an annualized total of $153,326.22 per year.

The current cost of water loss calculations will be shown later in this report.

**Goal:**

The goal of this report and related activities is to reduce the water loss in the McKinney Water District water system to a level equal to 15 percent of the water purchased.

**Objectives:**

1) Have support of the Board of Commissioners and communicate with the utility customers the need for supporting the water loss elimination program.
2) Improve Water Meter accuracy in recording, reading, and billing for customer accounts, billing and collection.
3) Test meters and calculations to confirm accuracy of the data.
4) Analyze water loss on a monthly basis and adjust the program as needed to target specific high loss zones.
5) Target high water loss zones with check and portable ultrasound meters to narrow down water loss areas for further investigation.

## Conditions of Existing Facilities:

### System water loss and cost:

The McKinney Water District (District) last planned for water loss detection in 2011 when Kenvirons, Inc. assisted the District in developing a plan and implementing it for a period of time. When the project started in June 2011 the water loss was 42%, by April 2012 the water loss was calculated at 16.7% of water purchased. The Plan established a process for water loss detection and elimination that if followed would result in control of water loss at a level of near 15% which is the industrial standard target maximum water loss. However, due to staff shortages, turnover and other staffing problems the recommended water loss operations were only partially completed and maintained. The system is presently in a condition that allowed a unaccounted water loss of 35.7% in 2021, 34% in 2022 and from October 2022 to September 2023 the water loss was 27.1 %. The system has six master meters purchasing water from the Cities of Stanford and Eubank. The system serves 2308 water customers about 1853 active meters at any one time.

The 2022 current water purchases for the Cities is 310,795 gpd at $3.23 per 1,000 g from Stanford and 74.341 gpd at $3.60 per 1,000 g from Eubank. The system water loss for each City is 39.31% for Stanford and 9.51% for Eubank. The cost of lost water for each is $394.62 for Stanford and $25.45 for Eubank each day. This is an annualized total of $153,326.22 per year.

### System pumps:

The MWD system currently has three pumping station. The major portion of the system operates off of the City of Stanford pressure head. Since large portions of the City of Stanford water system operate under high pressures (over 110 psi) this means that portions of the MWD system is also under high pressure. The principle water meter for the MWD is the meter and pumping station called "Ball Park'. It is located on KY Hwy 78 near Buffalo Springs. This pump station is only used when city of Stanford water pressure drops or when high demand in the MWD requires higher flows due to higher customer demand. This pump is rated at 150 GPM. The second pump is located on Mt Salem Road and is designed to serve an area of high elevation. It is rated at 50 GPM. This pump can cause problems of low water pressure in other areas of the system when operating at high demand times. The third pump station pumps water from the City of Stanford through the Maywood area from the Neal's Creek meter to the Ottenheim area. This is to offset water bought from the City of Eubank which is at a higher price for Eubank water. The pump is not metered and is estimated based on the run time of the pump.

### Water Mains:

The original water mains constructed in the 1960s were asbestos cement pipe. All of this system is still in use today. Other major water main extensions were done in the 1970s, 1990s and 2000s. Of particular problems are the zones that were constructed in the 1970s. These include the KY 198-Short Pike meter, Petry meter zone and Neals Creek meter zone (see tables 2B & 4). Another smaller zone of concern is the Rowland meter. This area has numerous extensions constructed by other with limited supervision. This area has a history of numerous service leaks and other non-metered problems.

The MWD water system is primarily built in the valleys of the Knobs Region that surround the Bluegrass Region. This results in many of the water mains being installed along, near or under numerous small streams, creeks and rivers. This makes construction difficult and location of water leaks, especially small leaks very difficult to identify. Also due to the service of water to some customers on the top of the knob

the water pressure in the main must be maintained higher than desirable in the lower valley areas. In addition the water system at times will experience landslides and floods that will do damage to the system.

Of particular concern are the customer service lines installed in the 1970s in the Neals Creek meter area. This area has a history of such leaks. It is also an area that has higher than desirable water pressure (110psi).

**Water Quality:**

The MWD is still having problems with the water quality requirements. The District has recently failed to meet disinfection products limits in HAA5s. The major source of this is the City of Stanford water treatment plant. The water delivered at the meter is at times as much as 95% of the limit. Since McKinney does not add additional disinfection products to its system there is very little MWD can do about meeting these limits. The HAA5s area also created due to detention time (water age) in the water mains and tanks. The MWD must flush the system in order to improve water age to help with water quality. This is of course a significant cost to the MWD.

The MWD has planned a construction project to purchase water from the City of Danville. This project will also replace two standpipes that have limited useful storage capacity with a new ground storage tank. This is expected to improve water age as well as have much lower HAA5s at the meter.

**Pressure Problems:**

High Pressure in a water system can be a problem for leaks. It causes leaks in mains, service lines and in home and business plumbing fixtures. These small leaks such as drips in faucets can be a significant source of unaccounted water loss since most meters will not register these very low flows. The McKinney System being in the Knobs Region has the problem of having high and low pressures in the same water mains. This makes managing a desirable water pressure in the system very difficult. The proposed water construction project will install numerous pressure reducers in the system to improve the high pressure areas.

## Water Usage Accounting:

The District uses a number of operational techniques to determine the water purchase and usage for various branches of the water system. Following is a list of the Master Meters and the subsequent flow and check meters identified in each branch.

| Master Meter | Flow Metered Branch | Test (check) Meter |
|---|---|---|
| Ball Bark | Ball Park | Thornhill Lane |
| | Short Pike | Ky Hwy 518 |
| | Petreys | Ky Hwy 1778 |
| | | Happy Hollow |
| | | Tombs Hollow |
| | | Moccason Road |
| | Bonneville | |
| Rowland | | |
| Neals Creek | | Sunvalley Rd |

Maywood 1
Maywood 2
US HWY 27 1 North
US HWY 27 2 South

Ottenheim

West Skyline

**NOTE:** The Master meter is the meter to purchase water from the provider.
Flow Meter Branch is a permanent installed meter to measure the flow to a branch.
Test (check) meter is a meter at a valve to manually check the instantaneous flow at that time for potential leaks or other problems in the specific branch of the system. These meters are not used on regular bases due to pressure and flow concerns.

In normal operations the water loss accounting is done for the master and flow meter branches of the system on monthly bases. It should be noted that the water bought and sold for anytime period is approximate due to timing of meter readings. The test meters are not included in the accounting on a regular basis but can be used manually during times of low flow demand due to the nature of the typical installation. These meters are best used at night time for the most useful results.

The District produces their monthly water loss report for the PSC. In this report the District accounts for water loss in numerous branches of the system. Table 1 shows the areas and the results for these accountings for 2022.

Table 1: 2022 water loss percentages by zone

| Water Zone | 22-Jan | 22-Jan | 22-Feb | 22-Feb | 22-Mar | 22-Mar | 22-Apr | 22-Apr | 22-May | 22-May | YEAR 2022 | YEAR 2022 | PERCENT |
|---|---|---|---|---|---|---|---|---|---|---|---|---|---|
| Location | Bought | Sold | Bought | Sold | Bought | Sold | Bought | Sold | Bought | Sold | Bought | Sold | LOSS |
| Short Pike | 1,731,500 | 881,200 | 1,498,900 | 709,000 | 1,713,400 | 947,900 | 1,607,100 | 903,800 | 1,817,000 | 937,900 | 8,367,900 | 4,379,800 | 48% |
| Petreys | 1,470,500 | 821,200 | 1,192,600 | 595,300 | 1,385,900 | 842,400 | 1,300,300 | 765,900 | 1,455,900 | 821,000 | 6,805,200 | 3,845,800 | 43% |
| Bonneyville | 496,700 | 341,800 | 528,300 | 295,400 | 554,800 | 397,600 | 414,100 | 359,100 | 443,800 | 399,500 | 2,437,700 | 1,793,400 | 26% |
| Ballpark | 2,729,300 | 1,558,200 | 2,648,200 | 2,915,200 | 2,320,900 | 1,861,400 | 2,250,500 | 2,051,700 | 2,681,300 | 2,121,800 | 12,630,200 | 10,508,300 | 17% |
| Total Ballpark | 6,428,000 | 3,602,400 | 5,868,000 | 4,514,900 | 5,975,000 | 4,049,300 | 5,572,000 | 4,080,500 | 6,398,000 | 4,280,200 | 30,241,000 | 20,527,300 | 32% |
| Neals Creek | 2,537,000 | 1,195,100 | 2,672,000 | 1,458,000 | 2,684,000 | 1,246,400 | 2,444,000 | 1,388,300 | 2,805,000 | 1,225,900 | 13,142,000 | 6,513,700 | 50% |
| Rowland | 692,000 | 255,400 | 711,000 | 307,800 | 738,000 | 354,000 | 660,000 | 255,600 | 746,000 | 266,200 | 3,547,000 | 1,439,000 | 59% |
| Ottenheim | 1,589,000 | 1,205,400 | 1,433,000 | 1,263,800 | 1,754,000 | 1,715,800 | 1,671,000 | 1,523,100 | 1,591,000 | 1,604,800 | 8,038,000 | 7,312,900 | 9% |
| Greasy Ridge | 443,300 | 377,900 | 407,700 | 345,100 | 435,100 | 430,500 | 419,700 | 384,100 | 554,600 | 460,700 | 2,260,400 | 1,998,300 | 12% |
| Skyline | 162,600 | 150,000 | 180,500 | 131,300 | 177,400 | 202,000 | 179,200 | 142,900 | 227,400 | 220,700 | 927,100 | 846,900 | 9% |
| Total | 11,851,900 | 6,786,200 | 11,272,200 | 8,020,900 | 11,763,500 | 7,998,000 | 10,945,900 | 7,774,500 | 12,322,000 | 8,058,500 | 58,155,500 | 38,638,100 | 34% |

2022 Chart of water loss by zone

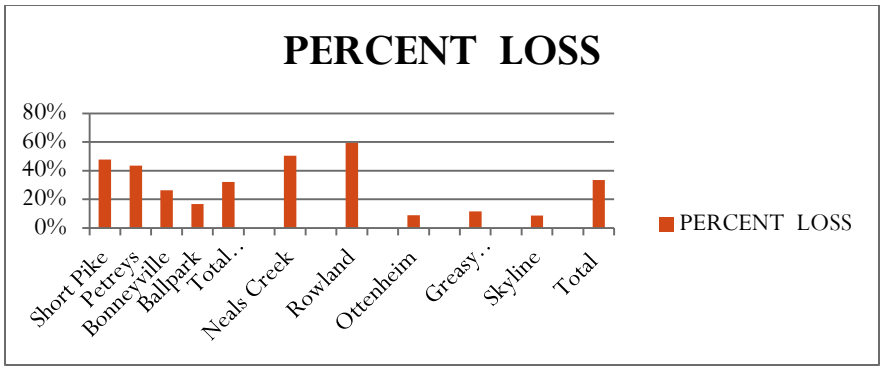


Table 2A: October 2022 to September 2023 water loss percentage (See Appendix B for details)

| Current | 12 month water purchase | 12 month water sales | Annual Water Loss Percent |
|---|---|---|---|
| Water Loss | 138,673,934 | 101,069,800 | 27.1% |

Table 2B: October 2022 to September 2023 water loss percentages by zone

| MONTH | AJUSTED REMAINDER BALL PARK METER | ROWLAND METER | NEALS CREEK METER | GREASY RIDGE METER | OTTENHEIM METER | WEST SKYLINE METER | PETREYS METER | BONEYVILLE METER | SHORT PIKE METER |
|---|---|---|---|---|---|---|---|---|---|
| Oct-22 | 0.02 | 0.70 | 0.39 | 0.10 | 0.14 | 0.14 | 0.61 | 0.22 | 0.45 |
| Nov-22 | 0.06 | 0.59 | 0.54 | 0.08 | (0.01) | 0.03 | 0.50 | 0.01 | 0.31 |
| Dec-22 | 0.01 | 0.56 | 0.48 | 0.06 | (0.00) | 0.09 | 0.44 | 0.15 | 0.25 |
| Jan-23 | (0.09) | 0.49 | 0.25 | (0.08) | (0.18) | (0.23) | 0.31 | (0.08) | 0.26 |
| Feb-23 | 0.10 | 0.51 | 0.50 | (0.02) | (0.05) | 0.00 | 0.56 | 0.17 | 0.37 |
| Mar-23 | 0.19 | 0.51 | 0.46 | 0.11 | 0.11 | 0.30 | 0.56 | 0.20 | 0.16 |
| Apr-23 | 0.08 | 0.45 | 0.40 | 0.20 | 0.03 | 0.10 | 0.53 | 0.21 | 0.35 |
| May-23 | 0.14 | 0.57 | 0.43 | 0.08 | 0.10 | 0.15 | 0.56 | 0.18 | 0.47 |
| Jun-23 | (0.06) | 0.50 | 0.41 | (0.03) | (0.07) | (0.02) | 0.52 | 0.14 | 0.07 |
| Jul-23 | 0.17 | 0.51 | 0.33 | 0.13 | 0.27 | 0.24 | 0.57 | 0.45 | 0.23 |
| Aug-23 | 0.02 | 0.58 | 0.47 | 0.20 | 0.05 | 0.10 | 0.51 | 0.34 | 0.25 |
| Sep-23 | 0.09 | 0.60 | 0.52 | 0.05 | 0.01 | 0.14 | 0.36 | 0.23 | 0.42 |
| ANNUAL % | 6% | 55% | 43% | 8% | 3% | 9% | 50% | 19% | 30% |
| Annual water loss as percent of total purchased water | 1% | 3% | 9% | 0% | 1% | 0% | 8% | 1% | 4% |
| Annual cost of water loss of total revenue | $ 6,586 | $ 15,945 | $ 48,527 | $ 1,640 | $ 2,735 | $ 848 | $ 41,736 | $ 3,982 | $ 20,636 |

| | |
|---|---|
| Calculated annual revenue loss | $ 142,637 |
| Highest Zones of Revenue loss (above 20%) | $ 126,845 |

Table 3: Cost of Water Loss at Purchased Price

| Cost of purchased water loss | | Rate | |
|---|---|---|---|
| Seller | Annual Gallons | per 1,000 gal | |
| STANFORD | 34,067,229 | 3.23 | $ 110,037 |
| EUBANK | 3,536,905 | 3.60 | $ 12,733 |
| | | TOTAL | $ 122,770 |

Table 4A: Water Tank inventory and year of installation

| Tank | Elevation | Capacity | Year |
|---|---|---|---|
| Boneyville | 1188 | 100,000 | 1964 |
| McKinney | 1176 | 100,000 | 1965 |
| Ottenheim | 1296 | 100,000 | 1997 |

Table 4B: Water main inventory and year of installation

| Area | Main Size | Type | Length | Year |
|---|---|---|---|---|
| McCORMACK | 3 | PVC | 5892 | 1970 |
| | 6 | PVC | 4305 | 1970 |
| NEALS CREEK #1 | <=2 | PVC | 2076 | 1970 |
| | 3 | PVC | 5112 | 1970 |
| | 3 | PVC | 2293 | 2000 |
| | 4 | PVC | 19017 | 1970 |
| | 6 | PVC | 33169 | 1970 |
| | 8 | PVC | 4764 | 1970 |
| NEALS CREEK #2 | <=2 | PVC | 1850 | 1970 |
| | 3 | PVC | 15846 | 1970 |
| | 4 | PVC | 1745 | 1970 |
| | 4 | PVC | 6547 | 1990 |
| | 6 | PVC | 21826 | 1970 |
| | 6 | PVC | 172 | 1990 |
| OTTENHEIM #1 | <=2 | PVC | 9979 | 1970 |
| | 3 | PVC | 121 | 1970 |
| | 4 | PVC | 23607 | 1970 |
| | 4 | PVC | 22535 | 2000 |

| | | | | |
|---|---|---|---|---|
| | 6 | AC | 4406 | 1960 |
| | 6 | PVC | 1576 | 1970 |
| BALL PARK 1 | <=2 | AC | 11872 | 1960 |
| | 3 | AC | 735 | 1960 |
| | 4 | AC | 2649 | 1960 |
| | 4 | PVC | 1628 | 2000 |
| | 6 | AC | 8447 | 1960 |
| | 6 | AC | 606 | 1970 |
| Area | Main Size | Type | Length | Year |
| | 6 | PVC | 6007 | 2000 |
| SHORT PIKE | <=2 | PVC | 5726 | 1970 |
| BALL PARK 2 | 3 | PVC | 9824 | 1970 |
| | 3 | PVC | 6940 | 1990 |
| | 4 | PVC | 12049 | 1970 |
| | 4 | PVC | 44729 | 1990 |
| | 4 | PVC | 4199 | 2000 |
| | 6 | AC | 3402 | 1970 |
| | 6 | PVC | 15021 | 1970 |
| OTTENHEIM #2 | 3 | PVC | 4216 | 1990 |
| | 3 | PVC | 11598 | 2000 |
| | 4 | PVC | 28128 | 1970 |
| | 4 | PVC | 39803 | 1990 |
| | 4 | PVC | 5010 | 2000 |
| | 6 | PVC | 248 | 1970 |
| | 6 | PVC | 5980 | 2000 |
| PETREYS | 4 | PVC | 67641 | 1970 |
| | 4 | PVC | 14766 | 1990 |
| | 4 | PVC | 21372 | 2000 |
| | 6 | AC | 2547 | 1960 |
| | 6 | PVC | 34850 | 1990 |
| | 6 | PVC | 2518 | 2000 |
| BALL PARK | 4 | PVC | 91 | 1960 |
| | 4 | PVC | 30564 | 2000 |
| | 6 | AC | 36070 | 1960 |
| | 6 | PVC | 50362 | 2000 |

## OPERATIONS TARGETING WATER LOSS:

1. Communication and Board Support:

The District will hold monthly meetings to address the status of water loss. The Staff and/or contractors will provide to the Board the information as determined by the accounting of the various meter braches in the system. The Board will provide support for the staff and/or contractors in adequate personnel, funds and equipment to assure a unified team effort in the water loss program.

2. Data analysis:

The District will continue to account for water loss in the zones identified above. The existing and proposed check meters and the portable ultrasonic meter will be used in various parts of the system to further split the zones into smaller parts to assist in the identification of problem areas. These sites will be shown on an attached map. The check meter sites that exist and any other added will be used to check for specific unexplained water flow in a particular branch in order to identify areas where the portable meter may be useful. This will add to the data analysis that will narrow the problem areas to a more manageable level.

The District will use the data to identify the trouble zones in the system and concentrate the leak detection effort in the areas with either the highest rate of loss or the largest amount of water loss. This will assure the most financial gain for the effort and funds expended.

3. Consistent meter reading schedule and accuracy:

The Board will establish a schedule for the reading of all meters in the system. Master and Zone meters should be read daily and the customers meters should be read as nearly to the same time of the month as possible. The 18$^{th}$ day of each month will be used as the day to compare water loss to customers meter readings. It generally takes four (4) days to read customer meters. This generally begins on the 15$^{th}$ day of each month and continues until complete. Adjustments are made when the 15$^{th}$ and 18$^{th}$ falls on weekends. Monthly water loss calculation dates should match as nearly as possible the customer reading dates. The board must confirm and monitor the reading of all meters and identify and minimize the estimating of meter readings within the system. The staff and/or contractors must identity all estimated readings each day or month within the accounting or computer system. Accurate and timely meter readings are the most essential part of any water loss program. Every meter in the system will be mapped.

The District will begin the implementation of an automated meter reading system to include replacement of water meters with automation capabilities and develop the other related hardware and software to implement this system over time. It is anticipated that the total conversion of the meter reading system to an automated system will be complete by the end of 2026.

The Board will continue to test the Master Meters and will begin testing Zone check meters on an annual basis.

4. Customer meter replacement program:

The District will continue and accelerate the customer meter replacement program. The District will continue to identify deficient meters and replace immediately. The District will continue to replace meters that are more than 10 years old as identified by the customer meter installation information. The District is currently behind in the replacement of old meters for 2023. This is partially due to the increase in cost of

new meters. The District will complete replacing all customer meters 10 years or older on an annual basis by the end of October each year. All new meters will be equipped to use a new automated reading system as well as manual read capability. The District's meter replacement program will begin a program to replace all the meters in the zones with highest water loss with an automated meter reading system regardless of age. All water meters slow with age. In addition they do not record very low flow such as drips and small leaks in customer lines. New technology can help identify some of these issues.

5. Ultrasonic Meter Placement:

The District will install several permanent meter pits to be used as needed by the ultrasonic meter to test and retest the branches of the system. This will provide safe, easy and immediate intermittent access to the water mains of primary importance to the leak detection program without the expense of a permanent check meter installation. The District will develop operating procedures to best identify the locations for these meter pits. The District will develop analytical methods to optimize the benefits of use of the portable meter to the water loss program. The zones where water loss and cost are the highest will be targeted with this approach. As outlined in the data analysis above the data analysis will be used to establish these specific sites to be targeted and may change for those shown on the map over time as details are developed.

6. Operation of Test meters and geo-sound equipment:

The District will develop a program that will consist of staff and/or consultants routinely using portable meters, test meters and/or geo-sound equipment to further investigate and isolate problem zones within the system. Using the analytical data to target the areas of high water loss the program will have personnel operate during nighttime hours to establish areas for further investigation. It is suggested that the staff work regular work hours Monday thru Thursday and nighttime hours Thursday night 11:00 PM to 7:00 AM Friday to complete the work week. This would be done during summer months and dry weather for best benefits. This also avoids overtime for employees as a routine operation. In this night-time investigation geo-phones would be used along with check meter readings, customer meter readings or portable flow meter to narrow down the zone to inspect for possible water leak locations. Customer meter / service connections will be checked with geo-sound equipment in this area to insure that customer service lines are intact and not compromised. The area would be further investigated by excavation if needed during routine business hours.

7. Phase 1B of the water improvements project:

The district is undertaking a water improvements project in the west end of Lincoln County to address a number of issues with the water system including disinfection products, low water pressure, pump station failures, and water loss. As part of this project a number of changes will be made to improve the ability of the District to control their water system and to regulate and identify problem zones. Among these changes will be the addition of a new water tank to replace two standpipes, replacement of existing water mains, pressure regulators along with check meters at locations where the water system splits into two directions, thus further delineating the zones of water loss into smaller areas to investigate. The project will be replacing large sections of the existing aging water mains and meters in this portion of the water system. We are anticipating this to improve the water loss issues in this area by identifying unmetered water usage, leaking mains and service lines. Many of the mains to be replaced are1960s vintage asbestos cement pipe. The project will increase pressures in some areas and decrease pressure in other areas. The areas with pressure in excess of 90 psi will have pressure reducers installed on customer meters. It is anticipated the

reduced pressure in the customer water lines will reduce the water loss due to low flow leaks not measured by the meter.

## CAPITAL EXPENDITURES TARGETING WATER LOSS:

1. Meters:

The District will begin implementing an upgrade of the meters in the system to an automated reading system. This will include targeting sections of the system where water loss is the highest with a complete replacement of all meters in this area and establishing the automated system to read these meters. In addition the District will be using automation ready meters with manual read capability in the meter replacement program to begin preparing for the eventual conversion of the entire system to an automated read system. The District will increase the meter purchases to include the above mentioned meter changes along with the program to replace all meters 10 years old or older.

The District will install inline check meters as part of the proposed Phase 1B project in order to improve analysis of the system and water loss. In addition the District will install meter pits for repeated use of the portable ultrasonic meter system in zones of high water loss that is not included in the Phase 1B project. Additional flow meters and check meters will be installed as needed, indicated by analysis of the ongoing water loss program. The attached map will show locations of existing and proposed pits and meters. Others will be added as the program determines need.

2. Service line replacement:

One particular area where the District is having repeated leaks in the system is the area of Maywood Loop. This area was constructed with a particular type of plastic tapping device that has proven to be insufficient and prone to failure. The area is subject to high water main pressures which makes service lines subject to failure. It is proposed as funds may be available to completely replace the service connection of each of the customer taps in this area. It would include about 400 customer taps.

3. Valve replacement:

The District will develop a program to locate and exercise the gate valves in the system. Any gate valve which is not fully operational will be replaced. Of particular emphasis will be the gate valves which also allow for the operation of the check meters and/or pressure reducers. Any check meter install will not be accurate if the associated valve does not work properly. Much of this work will be done as part of the proposed Phase 1B project.

4. Maps:

A map system will be continued and developed to establish the GPS coordinates of each meter in the system. The meter readers will obtain GPS coordinates of each meter during route reading by cell phone GPS or survey GPS to establish real repeatable locations of each meter in the system. This information will be required in the future to implement the automated reading system. Emphasis will be made to locate and identify each meter that is listed as inactive on the records to assure no water usage in inactive meters is taking place.

The attached map will show the currently proposed plan for implementation of the Phase 1B project and any proposals included in this report. To be included in the map is the following;

1. Water system water mains.

2. Proposed Phase 1B water mains.

3. Existing and proposed Permanent Check Meters, these meters will be read daily and continually monitors all water usage in a zone. (See attached detail).

4. Temporary Portable Ultrasonic Meter Pits, to be used in conjunction with geo-sonic devises and customer meter readings in a small area identified as high water loss.

5. Check Meter location used to isolate sub-zones of the system such as creek crossings and high water loss areas to be read on an as needed basis to improve data analysis.

5. Pressure Regulators:

The McKinney water system has areas of water pressure above desirable levels while at the same time and sometimes in the same water main has areas of low water pressure. These low pressure areas can at times of high demand be below DOW and PSC minimum requirements of 30 psi at the meter. As part of the proposed water improvements project the District will be installing a number of pressure regulation stations in conjunction with Zone check meters to reduce and regulate the pressure to maintain pressures in the desirable zone. This will aid in water loss by reducing main pressure and small leaks in customer homes and businesses due to high water pressure. Small leaks can add to water loss due to flows below meter operating levels. In addition customer service lines that see water pressures above 90psi will have pressure regulators installed at the water meter to reduce the pressure thereby reducing the risk of small water drips and leaks that are not measured by the low flow requirements of the meter.

6. Flushing:

The McKinney water district will install the necessary equipment to meter by permanent meter installation or temporary portable meter a means to accurately measure the water used in the flushing operations. The proposed water improvements project is intended to reduce the need to flush for disinfection-byproducts with the replacement of two standpipes that contribute to water age. The District currently estimates the water flow during flushing activities based on a previous study. The amount of water flowed during flushing can vary significantly due to pressure, valve and time variations that make estimates questionable.

# OPINION OF COST

## CAPITAL NEEDS RELATED TO SYSTEM MAINTENANCE

### YEAR ONE - 2024

| ITEM | UNITS | QUANTITIES | AMOUNT |
|---|---|---|---|
| CHECK METERS* | EACH | 4 | 10,000 |
| INLINE FLOW METERS* | EACH | 7 | 70,000 |
| PITS FOR ULTRASONIC METER | EACH | 5 | 25,000 |
| MEULLER ¾- $^{5}/_{8}$ METERS | EACH | 500 | 125,000 |
| METER MAPS | LS | 1 | 3,500 |
| FLUSH HYDRANT METERING | EACH | 6 | 6,000 |
| | | TOTAL | $239,500 |

* Phase 1B Project Cost

### YEAR TWO - 2025

| ITEM | UNITS | QUANTITIES | AMOUNT |
|---|---|---|---|
| CHECK METERS | EACH | 2 | 5,000 |
| AUTOMATED READING SYSTEM | LS | 1 | 25,500 |
| MEULLER ¾- $^{5}/_{8}$ METERS** | EACH | 1380 | 345,000 |
| SERICE LINE REPLACEMENT** | LS | 400 | 400,000 |
| | | TOTAL | $770,500 |

**Phase 3 Project Cost

### YEAR THREE - 2026

| ITEM | UNITS | QUANTITIES | AMOUNT |
|---|---|---|---|
| MEULLER ¾- $^{5}/_{8}$ METERS | EACH | 200 | 50,000 |
| AUTOMATED READING SYSTEM | LS | 1 | 5,500 |
| VALVE REPLACEMENT | EACH | 5 | 10,000 |
| | | TOTAL | $65,500 |

### YEAR FOUR - 2027

| ITEM | UNITS | QUANTITIES | AMOUNT |
|---|---|---|---|
| MEULLER ¾- $^{5}/_{8}$ METERS | EACH | 200 | 50,000 |
| | | TOTAL | $50,000 |

FOUR YEAR TOTAL $1,125,500

SEE APPENDIX A: CAPITAL COST OF PHASE 1B WATER SYSTEM IMPROVEMENTS PROJECT

# OPINION OF COST

# WATER LOSS SURCHARGE FUNDING

## YEAR ONE - 2024

| ITEM | UNITS | QUANTITIES | AMOUNT |
|---|---|---|---|
| MEULLER ¾- 5/8 METERS | EACH | 230 | 57,500 |
| PITS FOR ULTRASONIC METER | EACH | 5 | 25,000 |
| METER MAPS | LS | 1 | 3,500 |
| FLUSH HYDRANT METERING | EACH | 6 | 6,000 |
| | | TOTAL | $ 92,000 |
| | | SUSRCHARGE REVENUE | $ 90,590 |

## YEAR TWO - 2025

| ITEM | UNITS | QUANTITIES | AMOUNT |
|---|---|---|---|
| MEULLER ¾- 5/8 METERS | EACH | 500 | 125,000 |
| CHECK METERS | EACH | 2 | 5,000 |
| AUTOMATED READING SYSTEM | LS | 1 | 25,500 |
| | | TOTAL | $155,500 |
| | | TOTAL TO DATE | $ 247,500 |
| | | SUSRCHARGE REVENUE TO DATE | $ 181,181 |

## YEAR THREE - 2026

| ITEM | UNITS | QUANTITIES | AMOUNT |
|---|---|---|---|
| MEULLER ¾- 5/8 METERS | EACH | 200 | 50,000 |
| VALVE REPLACEMENT | EACH | 11 | 10,000 |
| AUTOMATED READING SYSTEM | LS | 1 | 5,500 |
| | | TOTAL | $65,500 |
| | | TOTAL TO DATE | $ 313,000 |
| | | SUSRCHARGE REVENUE TO DATE | $ 271,771 |

## YEAR FOUR - 2027

| ITEM | UNITS | QUANTITIES | AMOUNT |
|---|---|---|---|
| MEULLER ¾- 5/8 METERS | EACH | 200 | 50,000 |
| | | TOTAL | $50,000 |
| | | FOUR YEAR TOTAL | $363,000 |
| | | SUSRCHARGE REVENUE TO DATE | $ 362,362 |

McKINNEY WATER DISTRICT | 10/26/2023

# APPENDIX A

# Proposed Capital

# Improvement Projects

# Phase 1B

# Budget

# WX 21137017

Phase 1B Projected Construction and Project Cost (Water Mains to McKinney and New Water Tank)

| | Construction | Contingency | Total |
|---|---|---|---|
| Water Mains to McKinney | $2,153,783.00 | $215,378.30 | $2,369,161.30 |
| Water Mains on KY Hwy 78 (Optional) | $247,000.00 | $24,700.00 | $271,700.00 |
| Water Mains Total | $2,400,783.00 | $240,078.30 | $2,640,861.30 |
| | | | |
| New Water Tank | $1,071,700.00 | $107,170.00 | $1,178,870.00 |
| | | | |
| Total Phase 1B | $3,472,483.00 | $347,248.30 | $3,819,731.30 |

| Estimated Project Cost: | Estimated 3/9/22 |
|---|---|
| Administration | 80,000 |
| Legal | 25,000 |
| Planning/Land/Easements | 25,000 |
| Engineering, Design | 182,220 |
| Engineering, Other | 17,500 |
| Engineering, Inspection | 116,643 |
| Construction | 3,472,483 |
| Contingency | 347,284 |
| Project Totals Phase 1B | $4,266,130 |

Current Funding for the project approved or pending.

| | | Current | |
|---|---|---|---|
| KIA | (Phases 1B) | $ 2,078,317 | Loan |
| ARC | (Phase 1B) | $ 500,000 | Pending |
| Local | | $ 62,436 | |
| Lincoln County CWF | | $287,280 | |
| CDBG | | $1,000,000 | Pending |
| | TOTAL | $3,928,033 | |

DETAILED COST ESTIMATE for Phase 1B Water Improvements Project

| PHASE 2 ESTIMATED PROJECT COST Contract 2 | | | | |
|---|---|---|---|---|
| ITEMS | UNITS | QUANITITY | PRICE | TOTAL |
| MOBILIZATION | EA | 1 | 15000 | $15,000.00 |
| DEMOBILIZATION | EA | 1 | 10000 | $10,000.00 |
| 8" PVC CLASS 200 | LF | 35747 | 40 | $1,429,880.00 |
| 6" PVC CLASS 200 | LF | 1463 | 23 | $33,649.00 |
| 4" PVC CLASS 200 | LF | 7782 | 12 | $93,384.00 |
| AIR RELEASE W/ VAULT | EA | 18 | 2400 | $43,200.00 |
| PRESSURE REDUCER-MAIN | EA | 8 | 6600 | $52,800.00 |
| VALVES | EA | 16 | 1450 | $23,200.00 |
| WET TAP W/ VALVE | EA | 5 | 3000 | $15,000.00 |
| CUT AND CAP LINE KILL | EA | 5 | 500 | $2,500.00 |
| PRESSURE REDUCER-METER/RECONNECTS | EA | 64 | 450 | $28,800.00 |
| METER CONNECTIONS | EA | 30 | 1250 | $37,500.00 |
| TYPE I CREEK CROSSINGS | EA | 3 | 2500 | $7,500.00 |
| TYPE II BORE CREEK CROSSINGS | LF | 150 | 500 | $75,000.00 |
| DITCH CONC CAPS | EA | 1 | 500 | $500.00 |
| GAS MAIN CROSSING | EA | 5 | 3000 | $15,000.00 |
| ROAD BORE 14-INCH ENCASEMENT | LF | 165 | 350 | $57,750.00 |
| 1" SERVICE LINE ROAD BORE | LF | 256 | 50 | $12,800.00 |
| PUMP STATION | LS | 1 | 75000 | $75,000.00 |
| TELEMETRY | LS | 1 | 4000 | $4,000.00 |
| CHAIN LINK FENCE | LS | 1 | 320 | $320.00 |
| MASTER METER W/ VAULT | LS | 1 | 2500 | $2,500.00 |
| ROAD CUT ASPHALT | SQ FT | 1290 | 30 | $38,700.00 |
| FLUSH HYDRANT | EA | 1 | 3000 | $3,000.00 |
| FIRE HYDRANT | EA | 1 | 3000 | $3,000.00 |
| CONCRETE PAVEMENT | SQ FT | 497 | 25 | $12,425.00 |
| GRAVEL SURFACE | Ton | 385 | 35 | $13,475.00 |
| FARM FENCE | LF | 160 | 15 | $2,400.00 |
| PLANK FENCE | LF | 120 | 25 | $3,000.00 |
| LINE MARKERS | EA | 25 | 110 | $2,750.00 |
| ELECTRIC CONDUIT | EA | 50 | 75 | $3,750.00 |
| SEED AND STRAW | LS | 1 | 25000 | $25,000.00 |
| TESTING | LS | 1 | 11000 | $11,000.00 |
| | | TOTAL | | $2,153,783.00 |
| CONTINGENCY | | | | $215,378.30 |

| | | | | |
|---|---|---|---|---|
| | | | CONSTRUCTION COST | $2,369,161.30 |

| PHASE 1B ESTIMATED PROJECT COST Contract 3 | | | | |
|---|---|---|---|---|
| ITEMS | UNITS | QUANITITY | PRICE | TOTAL |
| MOBILIZATION | EA | 1 | 6000 | $6,000.00 |
| DEMOBILIZATION | EA | 1 | 6000 | $6,000.00 |
| 8" PVC | LF | 891 | 56 | $49,896.00 |
| VALVES VAULT | LS | 1 | 12000 | $12,000.00 |
| WET TAP 8-INCH W/ VALVE | EA | 1 | 3000 | $3,000.00 |
| STEEL WATER TANK | LS | 1 | 780000 | $780,000.00 |
| FOUNDATION DESIGN AND CONSTRUCTION | LS | 1 | 195000 | $195,000.00 |
| FIRE HYDRANT | EA | 1 | 2000 | $2,000.00 |
| BLACKTOP PAVEMENT | SQ FT | 0 | 30 | $0.00 |
| CONCRETE PAVEMENT | SQ FT | 0 | 25 | $0.00 |
| GRAVEL SURFACE | Ton | 455 | 50 | $22,750.00 |
| CHAIN LINK FENCE | LF | 238 | 25 | $5,950.00 |
| CHAIN LINK FENCE GATE | LS | 1 | 3500 | $3,500.00 |
| TELEMETRY | LS | 1 | 54000 | $54,000.00 |
| ELECTRIC SERVICE POLE | EA | 1 | 2500 | $2,500.00 |
| SEED AND STRAW | LS | 1 | 3000 | $3,000.00 |
| TESTING | LS | 1 | 8000 | $8,000.00 |
| | | TOTAL | | $1,071,700.00 |
| CONTINGENCY | | | | $107,170.00 |
| | | | CONSTRUCTION COST | $1,178,870.00 |

| PHASE 2 ESTIMATED PROJECT COST Contract 2 ADD ALTERNATE | | | | |
|---|---|---|---|---|
| ITEMS | UNITS | QUANITITY | PRICE | TOTAL |
| MOBILIZATION | EA | 1 | 3000 | $3,000.00 |
| DEMOBILIZATION | EA | 1 | 2000 | $2,000.00 |
| 8" PVC | LF | 5355 | 40 | $214,200.00 |
| AIR RELEASE W/ VAULT | EA | 1 | 2400 | $2,400.00 |
| PRESSURE REDUCER-MAIN | EA | 0 | 6600 | $0.00 |
| VALVES | EA | 2 | 1450 | $2,900.00 |
| WET TAP 6-INCH W/ VALVE | EA | 2 | 3000 | $6,000.00 |

| | | | | |
|---|---|---|---|---|
| CUT AND CAP LINE KILL | EA | 2 | 500 | $1,000.00 |
| METER CONNECTIONS | EA | 4 | 1250 | $5,000.00 |
| 1" SERVICE LINE ROAD BORE | LF | 80 | 50 | $4,000.00 |
| SEED AND STRAW | LS | 1 | 4500 | $4,500.00 |
| TESTING | LS | 1 | 2000 | $2,000.00 |
| | | TOTAL | | $247,000.00 |
| CONTINGENCY | | | | $24,700.00 |
| | | | CONSTRUCTIO N COST | $271,700.00 |

# APPENDIX B

## Water Purchased and Used

## October 2022 to September 2023

Water Purchased for October 2022 to September 2023

| MONTHLY WATER PURCHASE | AJUSTED REMAINDER BALL PARK METER | ROWLAND METER | NEALS CREEK METER | GREASY RIDGE METER | OTTENHEIM METER | WEST SKYLINE METER | PETREYS METER | BONEYVILLE METER | SHORT PIKE METER |
|---|---|---|---|---|---|---|---|---|---|
| Oct-22 | 2,506,200 | 1,090,000 | 2,498,934 | 493,900 | 1,754,066 | 202,800 | 2,003,000 | 407,300 | 1,745,500 |
| Nov-22 | 2,256,300 | 738,000 | 2,543,135 | 662,000 | 1,633,865 | 194,800 | 1,835,800 | 372,600 | 1,702,300 |
| Dec-22 | 1,863,300 | 555,000 | 2,345,361 | 497,300 | 1,320,639 | 168,300 | 1,621,500 | 362,700 | 1,390,500 |
| Jan-23 | 1,956,900 | 531,000 | 1,928,474 | 716,800 | 1,597,526 | 174,600 | 1,395,500 | 428,000 | 1,449,600 |
| Feb-23 | 1,765,800 | 410,000 | 2,112,000 | 410,500 | 1,333,000 | 191,300 | 1,664,000 | 351,600 | 1,371,600 |
| Mar-23 | 1,985,200 | 407,000 | 2,078,933 | 401,100 | 1,324,067 | 156,100 | 1,779,500 | 346,300 | 1,058,000 |
| Apr-23 | 2,143,400 | 489,000 | 2,357,721 | 512,500 | 1,557,279 | 184,100 | 1,776,700 | 412,200 | 1,489,700 |
| May-23 | 2,317,400 | 494,000 | 2,258,649 | 448,600 | 1,635,351 | 193,100 | 1,765,600 | 523,200 | 1,535,800 |
| Jun-23 | 3,102,900 | 623,000 | 2,686,220 | 551,000 | 1,996,780 | 238,000 | 2,240,200 | 615,800 | 1,254,100 |
| Jul-23 | 2,782,500 | 659,000 | 2,465,157 | 494,800 | 1,929,843 | 252,800 | 2,014,700 | 508,200 | 1,227,600 |
| Aug-23 | 2,995,600 | 690,000 | 2,854,660 | 518,400 | 2,079,340 | 234,600 | 1,886,200 | 579,600 | 1,578,600 |
| Sep-23 | 3,137,800 | 778,000 | 3,223,185 | 451,700 | 1,896,815 | 270,600 | 1,538,400 | 475,500 | 1,738,300 |
| TOTALS | 28,813,300 | 7,464,000 | 29,352,429 | 6,158,600 | 20,058,571 | 2,461,100 | 21,521,100 | 5,383,000 | 17,541,600 |

Water Metered and Accounted Water Usage for October 2022 to September 2023

| MONTHLY WATER SALES | AJUSTED REMAINDER BALL PARK METER | ROWLAND METER | NEALS CRREK METER | GREASY RIDGE METER | OTTENHEIM METER | WEST SKYLINE METER | PETREYS METER | BONEYVILLE METER | SHORT PIKE METER |
|---|---|---|---|---|---|---|---|---|---|
| Oct-22 | 2,463,200 | 322,200 | 1,519,000 | 443,000 | 1,516,200 | 173,800 | 779,400 | 316,100 | 957,000 |
| Nov-22 | 2,115,900 | 299,600 | 1,161,200 | 608,800 | 1,643,800 | 188,300 | 918,500 | 367,400 | 1,171,600 |
| Dec-22 | 1,848,600 | 242,500 | 1,209,700 | 466,400 | 1,321,600 | 153,400 | 903,400 | 307,000 | 1,041,200 |
| Jan-23 | 2,126,000 | 268,700 | 1,437,500 | 774,200 | 1,884,900 | 214,000 | 960,100 | 461,200 | 1,079,900 |
| Feb-23 | 1,580,800 | 201,000 | 1,052,500 | 419,000 | 1,402,300 | 191,200 | 725,000 | 292,500 | 861,800 |
| Mar-23 | 1,609,700 | 200,500 | 1,122,500 | 355,900 | 1,180,500 | 109,700 | 779,000 | 276,100 | 888,600 |
| Apr-23 | 1,965,700 | 271,200 | 1,412,100 | 407,700 | 1,517,200 | 165,100 | 828,900 | 324,800 | 970,600 |
| May-23 | 1,986,400 | 210,800 | 1,293,700 | 412,000 | 1,468,900 | 164,500 | 779,200 | 427,000 | 810,300 |
| Jun-23 | 3,275,400 | 313,400 | 1,588,900 | 564,800 | 2,140,400 | 242,500 | 1,067,900 | 532,400 | 1,167,600 |
| Jul-23 | 2,302,600 | 323,600 | 1,653,500 | 430,800 | 1,411,800 | 191,300 | 857,100 | 281,400 | 951,200 |
| Aug-23 | 2,950,200 | 287,400 | 1,526,900 | 415,300 | 1,969,100 | 210,000 | 917,200 | 381,100 | 1,187,300 |
| Sep-23 | 2,848,700 | 310,400 | 1,554,200 | 427,400 | 1,879,300 | 233,200 | 979,000 | 364,000 | 1,002,500 |
| TOTALS | 27,073,200 | 3,251,300 | 16,531,700 | 5,725,300 | 19,336,000 | 2,237,000 | 10,494,700 | 4,331,000 | 12,089,600 |

# APPENDIX C

## Master and Check Meter Locations

Table C-1 : Master Meters and Check-Off Meters

### Master Meters Locations

| **City of Stanford Meters** | Latitude | Longitude | KY South X | KY South Y |
|---|---|---|---|---|
| Ballpark Pump and Meter | 37.52718 | -84.678272 | 1951200.15 | 2076847.718 |
| Check off Meters of Ball Park | | | | |
| Short Pike Meter | 37.44781 | -84.77275 | 1924103.039 | 2047652.708 |
| Petrey Meter | 37.438904 | -84.74697 | 1931620.877 | 2044488.584 |
| Boneyville Meter | 37.506575 | -84.694219 | 1946659.817 | 2069293.57 |
| | | | | |
| Neal Creek Meter | 37.4869 | -84.670754 | 1953547.691 | 2062207.054 |
| Ottenheim Pump Check off | 37.465663 | -84.617441 | 1969107.827 | 2054656.077 |
| | | | | |
| Rowland Meter | 37.529894 | -84.637822 | 1962917.819 | 2077971.429 |
| | | | | |
| **City of Eubank Meters** | Latitude | Longitude | | |
| Skyline Meter | 37.485217 | -84.697281 | 1945858.333 | 2061507.453 |
| Greasey Ridge Meter | 37.428409 | -84.655039 | 1958353.843 | 2040963.889 |
| Eubank Ottenheim Meter | 37.457422 | -84.625041 | 1966937.989 | 2051629.318 |

Table C-2: Check Meter Locations

### Check Meters McKinney Water

| Latitude | Longitude | KY South X | KY South Y |
|---|---|---|---|
| 37.42062 | -84.75466 | 1929458.501 | 2037808.022 |
| 37.41394 | -84.76156 | 1927480.294 | 2035354.895 |
| 37.41233 | -84.76355 | 1926908.498 | 2034762.677 |
| 37.41358 | -84.77424 | 1923799.24 | 2035185.543 |
| 37.40431 | -84.78003 | 1922152.4 | 2031793.154 |
| 37.39495 | -84.76484 | 1926599.848 | 2028430.977 |
| 37.5266 | -84.6263 | 1966272.992 | 2076811.658 |
| 37.52031 | -84.62343 | 1967132.52 | 2074531.458 |
| 37.4919 | -84.64755 | 1960258.523 | 2064105.218 |
| 37.44309 | -84.75166 | 1930243.2 | 2045998.229 |
| 37.49191 | -84.64755 | 1960257.61 | 2064108.849 |
| 37.469234 | -84.6273 | 1966230.363 | 2055922.057 |

| | | | |
|---|---|---|---|
| 37.467989 | -84.61842 | 1968813.281 | 2055499.525 |
| 37.468002 | -84.61842 | 1968813.225 | 2055504.258 |
| 37.484517 | -84.63063 | 1965199.542 | 2061474.906 |
| 37.432497 | -84.74517 | 1932168.833 | 2042161.444 |
| 37.422185 | -84.75066 | 1930615.172 | 2038390.091 |
| 37.44781 | -84.77275 | 1924103.039 | 2047652.708 |

Table C-3 Damage or Inoperable Main Line Valve Replacement Locations

## Damaged Inoperable Valve Replacement Locations

| Latitude | Longitude | KY South X | KY South Y |
|---|---|---|---|
| 37.41584 | -84.75911 | 1928184.544 | 2036054.11 |
| 37.4043 | -84.78003 | 1922152.447 | 2031789.513 |
| 37.40898 | -84.76829 | 1925544.598 | 2033528.652 |
| 37.42974 | -84.77909 | 1922330.277 | 2041054.668 |
| 37.44212 | -84.77519 | 1923416.132 | 2045573.73 |
| 37.44821 | -84.76826 | 1925404.883 | 2047811.857 |
| 37.44848 | -84.76157 | 1927345.816 | 2047930.41 |
| 37.46569 | -84.62762 | 1966153.701 | 2054630.652 |
| 37.47585 | -84.64067 | 1962323.07 | 2058285.015 |
| 37.48621 | -84.645 | 1961022.525 | 2062042.213 |
| 37.49048 | -84.66742 | 1954500.035 | 2063521.552 |

# APPENDIX D

## Water Loss Ongoing Maintenance

## October 2023

Figure C-1

Typical water main leak found and repaired on October 10, 2023.

Location : Short Pike Zone Meter

# APPENDIX E

# PHASE 3 PROJECT

# APPLICATION

# Drinking Water Project Profile Pre-Application

Water Resource Information System
Mapping Requirements
DWSRF Ranking Criteria

McKinney Water Project Phase 3 WX #: WX 21137065

**Project Schedule:** January 2026

## Project Description:

The McKinney Water District is undertaking a project to develop, correct and improve the existing water system. The District is and has been experiencing a recurring water loss problem for many years. The existing system is aging and much of the system has been built by others in a manner that does not lend itself to longevity. The District will develop a project to include the following:

1) Upgrade the existing customer meters in the system to an automated reading system.

2) Develop and install a master check meter system to identify areas with water leak trouble to help eliminate leaks both now and continuing into the future.

3) Develop and implement a plan to repair know trouble areas for both water mains and service lines that shows to be constantly leak prone.

4) Replace inoperable main valves, service lines, and meter setters in areas of high water loss.

## Need for the Project

The McKinney Water District is and has been suffering with a high water loss for many years. The water loss is near of above the 30% level on a recurring and continuing bases. The PSC has issued a notice to the District to get the water loss down to below 15%. The area served by the District is a very low income area of Lincoln County with low to moderate income level of near 65%. The District has difficulty raising enough funds to implement project to improve and repair the existing system from rates.

# Drinking Water Project Profile Pre-Application

Water Resource Information System

Mapping Requirements
DWSRF Ranking Criteria

* Project Title: McKinney Water Project Phase 3

☐ This project is a REVISION of a previous submitted Project Profile.

Previously assigned WX #:

## BUDGET AND SCHEDULE [TAB]

◉ Estimated Budget ○ As-Bid Budget

### Project Cost Classification

| | |
|---|---|
| Administrative Expenses: Legal | 70000 |
| Expenses: | |
| Land, Appraisals, Easements: | |
| Relocation Expense & Payments: | |
| Planning: | |
| Engineering Fees - Design: | 100000 |
| Engineering Fees - Construction: | 5000 |
| Engineering Fees - Inspection: | 45000 |
| Engineering Fees - Other: | |
| Construction: | 1100000 |
| Equipment: | 30000 |
| Miscellaneous: | |
| Contingencies: | 110000 |
| * **Total Project Cost:** | 1460000 |

### Construction Cost Categories

| | |
|---|---|
| Treatment: | |
| Transmission and Distribution: | 1100000 |
| Lead Remediation: | |
| Source: | |
| Storage: | |
| Purchase of Systems: | |
| Restructuring: | |
| Land Acquisition: | |
| Non-Categorized Cost: | |
| **Total Construction Cost:** | 1100000 |

### Project Funding Sources (Project Readiness Points Received: 30**)

| FUNDING SOURCE | AMOUNT | STATUS | APPLICABLE DATE |
|---|---|---|---|
| KIA | 660000 | | 2025 |
| ARC | 500000 | | 2025 |
| Local | 300000 | | 2025 |
| | | | |
| | | | |
| | | | |
| | | | |

### Estimated Project Schedule

Estimate Environmental Review Submittal Date:
(Project Readiness Points Received: 30**)

Estimated Bid Date: January 20

* Estimated Bid Date required if Funding Source is KIA SRF Fund F Loan (DW)

Estimated Construction Start Date: May 2025

* Estimated Construction Start Date required if Funding Source is KIA SRF Fund F Loan (DW)

Estimated Construction Completion Date: December

**Funding Source Notes:**

**Project Readiness Points - Must meet all three criteria to receive points: 1) submitted plans to DOW for review, 2) Environmental Review cross cutter scoping process is complete, and 3) funding commitments from other funds or DWSRF is sole source.

Drinking Water

Page 3 of 17

McKINNEY WATER DISTRICT | 10/26/2023

# APPENDIX F

# Typical Test Meter Analysis Form

# WATER LOSS ANALYSIS

# AT TEST METER SITE FORM

Date _____/_____/_____ Time ____:_____ Weather _____

Test Meter Location _____

Size of water main _____ Test Meter Size _____

Condition of main line valve __Closes Good __ Does Not Close __ Difficult to Close

Location of termination valve _____

Condition of termination valve __Closes Good __ Does Not Close __ Difficult to Close

Test Meter Reading with valve closed _____ Time _____:_____

Number of customer meters in testing area between
Test meter valve and termination valve or end of water main _____

Meter reading of Test meter at end of test period _____ Time _____:_____

Total gallons of flow through Test Meter _____Gallons Total Time _____ Minutes

Average Flow _____ Gallons per minute

Customer Meter Readings (If required in test zone)

| Customer address | Begin Reading | Time | End Reading | Time | | |
|---|---|---|---|---|---|---|
| _____ | _____ | __:__ | _____ | __:__ | _____Gallons | _____Minutes |
| _____ | _____ | __:__ | _____ | __:__ | _____Gallons | _____Minutes |
| _____ | _____ | __:__ | _____ | __:__ | _____Gallons | _____Minutes |
| _____ | _____ | __:__ | _____ | __:__ | _____Gallons | _____Minutes |
| _____ | _____ | __:__ | _____ | __:__ | _____Gallons | _____Minutes |
| _____ | _____ | __:__ | _____ | __:__ | _____Gallons | _____Minutes |
| _____ | _____ | __:__ | _____ | __:__ | _____Gallons | _____Minutes |
| _____ | _____ | __:__ | _____ | __:__ | _____Gallons | _____Minutes |
| _____ | _____ | __:__ | _____ | __:__ | _____Gallons | _____Minutes |
| _____ | _____ | __:__ | _____ | __:__ | _____Gallons | _____Minutes |
| _____ | _____ | __:__ | _____ | __:__ | _____Gallons | _____Minutes |
| _____ | _____ | __:__ | _____ | __:__ | _____Gallons | _____Minutes |

| | | | | | | |
|---|---|---|---|---|---|---|
| _____ | _____ | __:__ | _____ | __:__ | _____Gallons | _____Minutes |
| _____ | _____ | __:__ | _____ | __:__ | _____Gallons | _____Minutes |
| _____ | _____ | __:__ | _____ | __:__ | _____Gallons | _____Minutes |
| _____ | _____ | __:__ | _____ | __:__ | _____Gallons | _____Minutes |
| _____ | _____ | __:__ | _____ | __:__ | _____Gallons | _____Minutes |
| _____ | _____ | __:__ | _____ | __:__ | _____Gallons | _____Minutes |
| _____ | _____ | __:__ | _____ | __:__ | _____Gallons | _____Minutes |
| _____ | _____ | __:__ | _____ | __:__ | _____Gallons | _____Minutes |
| _____ | _____ | __:__ | _____ | __:__ | _____Gallons | _____Minutes |
| _____ | _____ | __:__ | _____ | __:__ | _____Gallons | _____Minutes |
| _____ | _____ | __:__ | _____ | __:__ | _____Gallons | _____Minutes |
| _____ | _____ | __:__ | _____ | __:__ | _____Gallons | _____Minutes |
| _____ | _____ | __:__ | _____ | __:__ | _____Gallons | _____Minutes |
| _____ | _____ | __:__ | _____ | __:__ | _____Gallons | _____Minutes |
| _____ | _____ | __:__ | _____ | __:__ | _____Gallons | _____Minutes |
| _____ | _____ | __:__ | _____ | __:__ | _____Gallons | _____Minutes |
| _____ | _____ | __:__ | _____ | __:__ | _____Gallons | _____Minutes |
| _____ | _____ | __:__ | _____ | __:__ | _____Gallons | _____Minutes |
| _____ | _____ | __:__ | _____ | __:__ | _____Gallons | _____Minutes |
| _____ | _____ | __:__ | _____ | __:__ | _____Gallons | _____Minutes |

Total Customer Metered flow in test Period _____Gallons _____Minutes

Adjustments _____ Gallons _____Minutes

Test period Customer Flow _____Gal/ min

Test Meter Flow _____Gal/ min Unaccounted Flow _____Gal/ min

# APPENDIX G

## Typical for Pressure Reducer and Inline Meter Installation

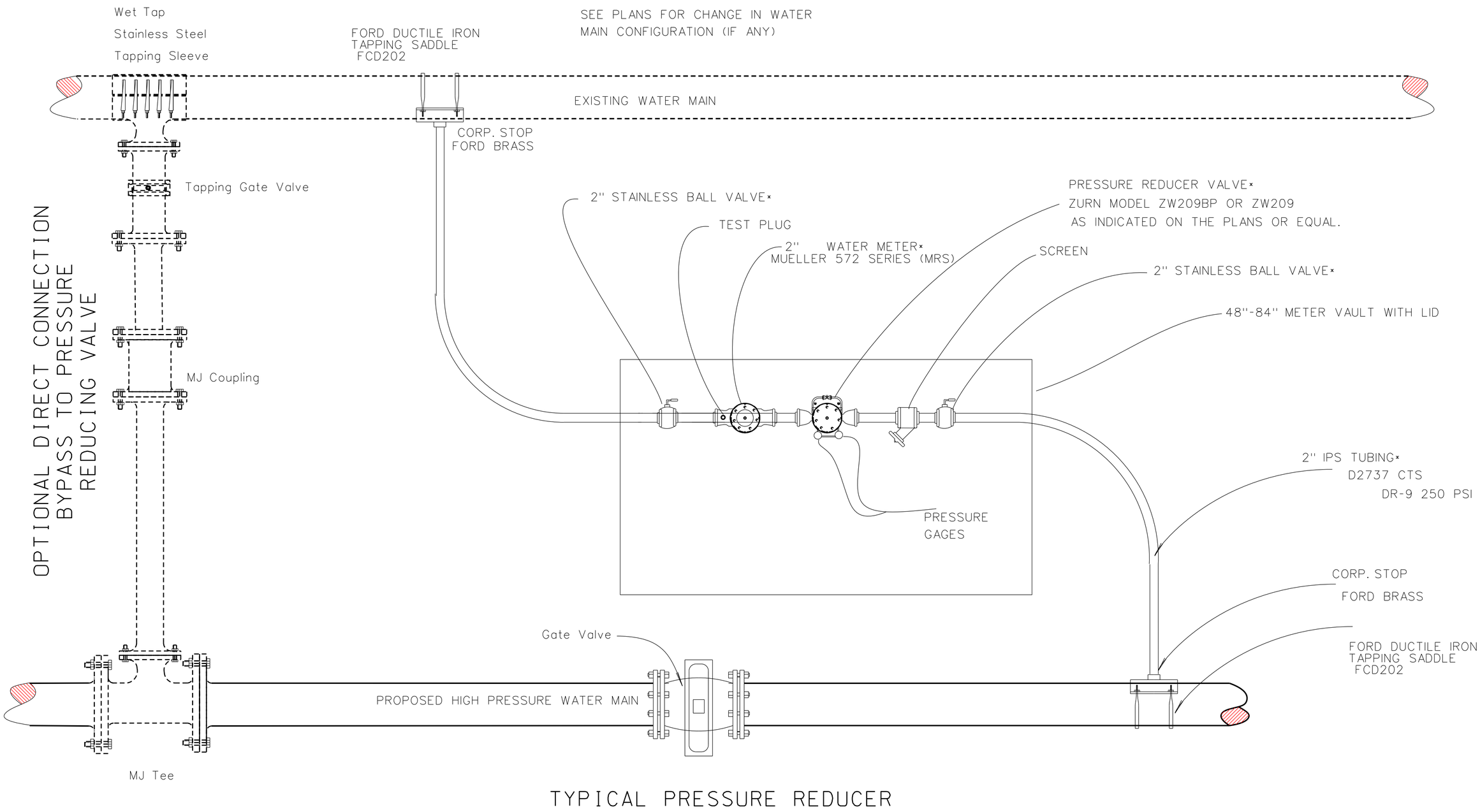


TYPICAL PRESSURE REDUCER
WITH OPTIONAL BYPASS
MAIN CONNECTION
OTHER WATER MAIN CONFIGURATIONS
MAY BE REQUIRED (SEE PLANS)
*(SIZES MAY VARY SEE PLANS)

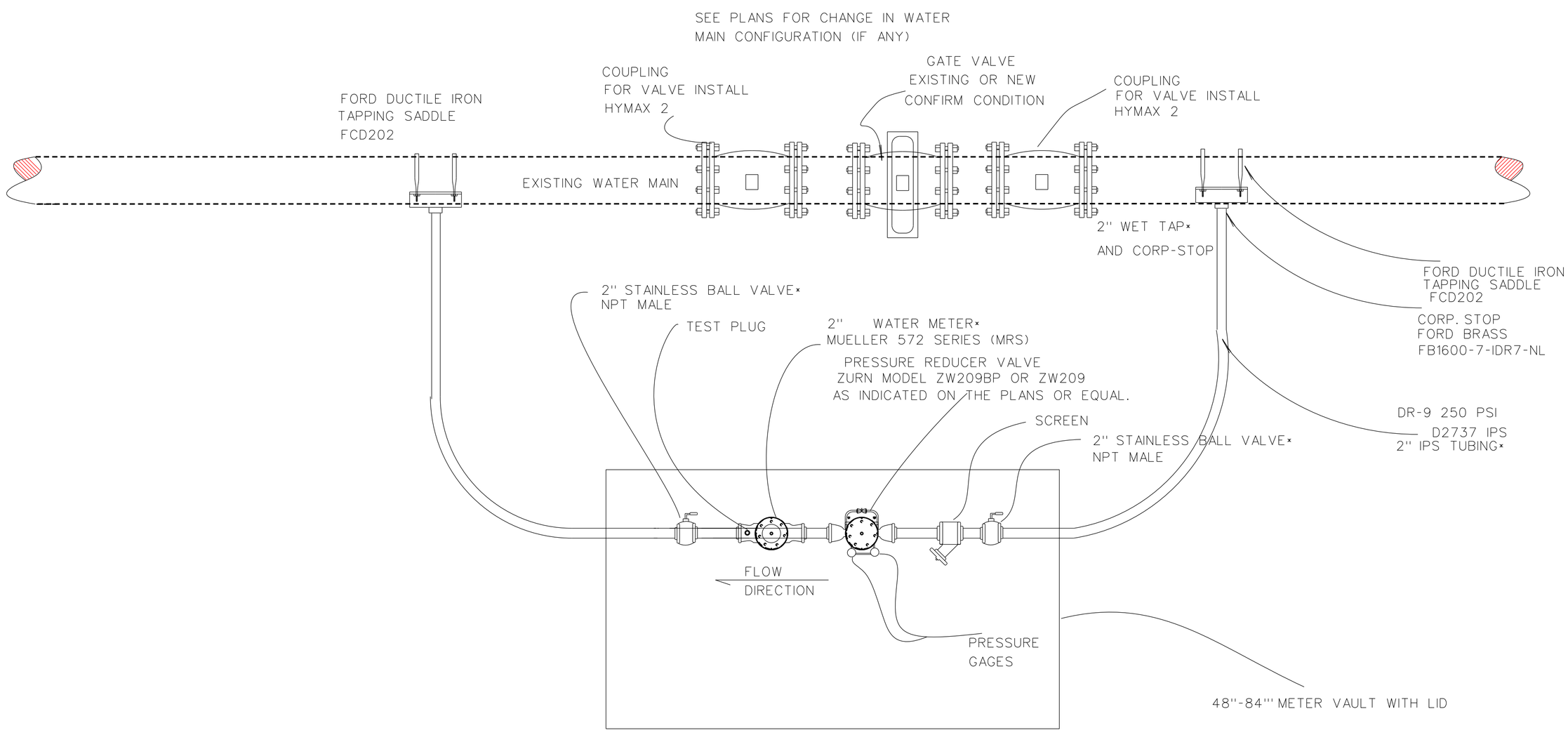


ALTERNATE PRESSURE REDUCER
WITH VALVE ON
EXISTING MAIN CONNECTION
VAVLE MAY BE REQUIRED (SEE PLANS)
*(SIZES MAY VARY SEE PLANS)