Scanning Batch Sheet

Show Form

DOW

Filed 1/21/2020 OAH

COMMONWEALTH OF KENTUCKY
ENERGY AND ENVIRONMENT CABINET
OFFICE OF ADMINISTRATIVE HEARINGS
FILE NO. DOW-34206
AI NO. 1643
ENVIRONMENTAL ADMIN. HEARING OFFICER JOHN KEVIN WELCH

ENERGY AND ENVIRONMENT CABINET — PETITIONER

vs.

AIRVIEW UTILITIES, LLC — RESPONDENT

JAN 21 2020

ORDER SCHEDULING STATUS CONFERENCE

This matter came before the undersigned Hearing Officer for a Status Conference on January 10, 2020. Hon. Kathleen M. Saunier appeared on behalf of the Petitioner, Energy and Environment Cabinet. Hon. Robert Moore appeared on behalf of the Respondent, Airview Utilities, LLC. The conference was electronically recorded.

The parties reported that they are currently in negotiations in attempt to resolve this matter. The parties agreed that it would be advisable to schedule a Status Conference in sixty days. The parties agreed to a date and time for the conference, as set forth below.

Having consulted with counsel, and being otherwise duly advised, the Hearing Officer hereby Orders:

(1) The parties shall appear for a Status Conference on **March 2, 2020 at 11:00 AM** Eastern Time. The parties may appear in person for the conference at the Office of Administrative Hearings, Public Service Commission Building, 211 Sower Boulevard, Frankfort, Kentucky. Parties wishing to participate in the conference by telephone may call the Office of Administrative

WD

Hearings at **1-866-830-9434** at the time and on the date set for the conference. After the prompt for the conference code, enter **9312209#**. If a party experiences any problems with the conference line during the conference, please contact the Office of Administrative Hearings directly at 502-564-7312 and report the problem immediately.

(2) If a document, which completely resolves this matter, is signed by all Parties and filed in the Office of Administrative Hearings on or before the next Status Conference, then that Status Conference shall be automatically canceled and the Hearing Officer will take appropriate action on the document filed.

So ORDERED on January 15, 2020.

John Kevin Welch

Hon. John Kevin Welch
Environmental Administrative Hearing Officer
Office of Administrative Hearings
Energy and Environment Cabinet
211 Sower Boulevard
Frankfort, Kentucky 40601
Telephone: 502-564-7312
Facsimile: 502-564-4973

CERTIFICATE OF SERVICE

I hereby certify that a true and accurate copy of the foregoing Order, was served on January 21, 2020 by first-class U.S. mail, postage prepaid, upon the following:

Hon. Robert C. Moore
Airview Utilites, LLC
421 West Main Street
P.O. Box 676
Frankfort, KY 40601

Hand-delivered by messenger mail to:

Hon. Kathleen M. Saunier
Hon. Daniel Cleveland
Office of Legal Services
Energy and Environment Cabinet
300 Sower Blvd., 3rd Floor
Frankfort, KY 40601

Paige Tate
Docket Coordinator

Distribution:
DOW
John Kevin Welch, E.A. Hearing Officer

KEY NODI 9

NPDES ID	Permit Name	County Name	Perm Feature ID-Limit Set	Mon. Period End Date	Parameter Desc	Param Cd - MLC - Season ID	Monitoring Location Desc	Worst % exced.	Quantity 1	Q1 DMR Value Unit Short Desc	Quantity 2	Q2 DMR Value Unit Short Desc	Limit Value - Quantity Units	Concentration 1	C1 DMR Value Unit Short Desc	Concentration 2	C2 DMR Value Unit Short Desc	Concentration 3	C3 DMR Value Unit Short Desc	Limit Value - Concentration Units	Effluent Vio. Exists
KY0044164	Golden Acres WWTF	Marshall	001-2	12/31/2019	Oxygen, dissolved [DO]	00300-1-0	Effluent Gross	74						1.8	mg/L					mg/L	Y
KY0044164	Golden Acres WWTF	Marshall	001-2	09/30/2019	Oxygen, dissolved [DO]	00300-1-0	Effluent Gross													mg/L	N
KY0044164	Golden Acres WWTF	Marshall	001-2	06/30/2019	Oxygen, dissolved [DO]	00300-1-0	Effluent Gross													mg/L	N
KY0044164	Golden Acres WWTF	Marshall	001-2	03/31/2019	Oxygen, dissolved [DO]	00300-1-0	Effluent Gross													mg/L	N
KY0044164	Golden Acres WWTF	Marshall	001-2	12/31/2018	Oxygen, dissolved [DO]	00300-1-0	Effluent Gross							7.08	mg/L					mg/L	N
KY0044164	Golden Acres WWTF	Marshall	001-2	09/30/2018	Oxygen, dissolved [DO]	00300-1-0	Effluent Gross							7.16	mg/L					mg/L	N
KY0044164	Golden Acres WWTF	Marshall	001-2	06/30/2018	Oxygen, dissolved [DO]	00300-1-0	Effluent Gross	70						2.11	mg/L					mg/L	Y
KY0044164	Golden Acres WWTF	Marshall	001-2	03/31/2018	Oxygen, dissolved [DO]	00300-1-0	Effluent Gross							8.18	mg/L					mg/L	N
KY0044164	Golden Acres WWTF	Marshall	001-2	12/31/2017	Oxygen, dissolved [DO]	00300-1-0	Effluent Gross							7.4	mg/L					mg/L	N
KY0044164	Golden Acres WWTF	Marshall	001-2	09/30/2017	Oxygen, dissolved [DO]	00300-1-0	Effluent Gross							7	mg/L					mg/L	N
KY0044164	Golden Acres WWTF	Marshall	001-2	06/30/2017	Oxygen, dissolved [DO]	00300-1-0	Effluent Gross							7.2	mg/L					mg/L	N
KY0044164	Golden Acres WWTF	Marshall	001-2	03/31/2017	Oxygen, dissolved [DO]	00300-1-0	Effluent Gross							7.2	mg/L					mg/L	N
KY0044164	Golden Acres WWTF	Marshall	001-2	12/31/2016	Oxygen, dissolved [DO]	00300-1-0	Effluent Gross							7	mg/L					mg/L	N
KY0044164	Golden Acres WWTF	Marshall	001-2	09/30/2016	Oxygen, dissolved [DO]	00300-1-0	Effluent Gross							7	mg/L					mg/L	N
KY0044164	Golden Acres WWTF	Marshall	001-2	06/30/2016	Oxygen, dissolved [DO]	00300-1-0	Effluent Gross							7.3	mg/L					mg/L	N
KY0044164	Golden Acres WWTF	Marshall	001-2	03/31/2016	Oxygen, dissolved [DO]	00300-1-0	Effluent Gross							7.8	mg/L					mg/L	N
KY0044164	Golden Acres WWTF	Marshall	001-2	12/31/2015	Oxygen, dissolved [DO]	00300-1-0	Effluent Gross							7	mg/L					mg/L	N
KY0044164	Golden Acres WWTF	Marshall	001-2	09/30/2015	Oxygen, dissolved [DO]	00300-1-0	Effluent Gross							7.2	mg/L					mg/L	N
KY0044164	Golden Acres WWTF	Marshall	001-2	06/30/2015	Oxygen, dissolved [DO]	00300-1-0	Effluent Gross							7.4	mg/L					mg/L	N
KY0044164	Golden Acres WWTF	Marshall	001-2	03/31/2015	Oxygen, dissolved [DO]	00300-1-0	Effluent Gross							8.1	mg/L					mg/L	N
													MIN	1.8							
KY0044164	Golden Acres WWTF	Marshall	001-2	12/31/2019	pH	00400-1-0	Effluent Gross							6.76	SU					SU	N
KY0044164	Golden Acres WWTF	Marshall	001-2	12/31/2019	pH	00400-1-0	Effluent Gross											6.85	SU	SU	N
KY0044164	Golden Acres WWTF	Marshall	001-2	09/30/2019	pH	00400-1-0	Effluent Gross													SU	N
KY0044164	Golden Acres WWTF	Marshall	001-2	06/30/2019	pH	00400-1-0	Effluent Gross													SU	N
KY0044164	Golden Acres WWTF	Marshall	001-2	03/31/2019	pH	00400-1-0	Effluent Gross													SU	N
KY0044164	Golden Acres WWTF	Marshall	001-2	12/31/2018	pH	00400-1-0	Effluent Gross							6.64	SU					SU	N
KY0044164	Golden Acres WWTF	Marshall	001-2	12/31/2018	pH	00400-1-0	Effluent Gross											6.64	SU	SU	N
KY0044164	Golden Acres WWTF	Marshall	001-2	09/30/2018	pH	00400-1-0	Effluent Gross							7.12	SU					SU	N
KY0044164	Golden Acres WWTF	Marshall	001-2	09/30/2018	pH	00400-1-0	Effluent Gross											7.12	SU	SU	N
KY0044164	Golden Acres WWTF	Marshall	001-2	06/30/2018	pH	00400-1-0	Effluent Gross							8.04	SU					SU	N
KY0044164	Golden Acres WWTF	Marshall	001-2	06/30/2018	pH	00400-1-0	Effluent Gross											8.04	SU	SU	N
KY0044164	Golden Acres WWTF	Marshall	001-2	03/31/2018	pH	00400-1-0	Effluent Gross							7.16	SU					SU	N
KY0044164	Golden Acres WWTF	Marshall	001-2	03/31/2018	pH	00400-1-0	Effluent Gross											7.16	SU	SU	N
KY0044164	Golden Acres WWTF	Marshall	001-2	12/31/2017	pH	00400-1-0	Effluent Gross							6.3	SU					SU	N
KY0044164	Golden Acres WWTF	Marshall	001-2	12/31/2017	pH	00400-1-0	Effluent Gross											6.3	SU	SU	N
KY0044164	Golden Acres WWTF	Marshall	001-2	09/30/2017	pH	00400-1-0	Effluent Gross							6.7	SU					SU	N
KY0044164	Golden Acres WWTF	Marshall	001-2	09/30/2017	pH	00400-1-0	Effluent Gross											6.7	SU	SU	N
KY0044164	Golden Acres WWTF	Marshall	001-2	06/30/2017	pH	00400-1-0	Effluent Gross							7.9	SU					SU	N
KY0044164	Golden Acres WWTF	Marshall	001-2	06/30/2017	pH	00400-1-0	Effluent Gross											7.9	SU	SU	N
KY0044164	Golden Acres WWTF	Marshall	001-2	03/31/2017	pH	00400-1-0	Effluent Gross							7.9	SU					SU	N
KY0044164	Golden Acres WWTF	Marshall	001-2	03/31/2017	pH	00400-1-0	Effluent Gross											7.9	SU	SU	N
KY0044164	Golden Acres WWTF	Marshall	001-2	12/31/2016	pH	00400-1-0	Effluent Gross							7.5	SU					SU	N
KY0044164	Golden Acres WWTF	Marshall	001-2	12/31/2016	pH	00400-1-0	Effluent Gross											7.5	SU	SU	N
KY0044164	Golden Acres WWTF	Marshall	001-2	09/30/2016	pH	00400-1-0	Effluent Gross							8.2	SU					SU	N
KY0044164	Golden Acres WWTF	Marshall	001-2	09/30/2016	pH	00400-1-0	Effluent Gross											8.2	SU	SU	N
KY0044164	Golden Acres WWTF	Marshall	001-2	06/30/2016	pH	00400-1-0	Effluent Gross							7	SU					SU	N
KY0044164	Golden Acres WWTF	Marshall	001-2	06/30/2016	pH	00400-1-0	Effluent Gross											7	SU	SU	N
KY0044164	Golden Acres WWTF	Marshall	001-2	03/31/2016	pH	00400-1-0	Effluent Gross							7.4	SU					SU	N
KY0044164	Golden Acres WWTF	Marshall	001-2	03/31/2016	pH	00400-1-0	Effluent Gross											7.4	SU	SU	N
KY0044164	Golden Acres WWTF	Marshall	001-2	12/31/2015	pH	00400-1-0	Effluent Gross							6.7	SU					SU	N
KY0044164	Golden Acres WWTF	Marshall	001-2	12/31/2015	pH	00400-1-0	Effluent Gross											6.7	SU	SU	N
KY0044164	Golden Acres WWTF	Marshall	001-2	09/30/2015	pH	00400-1-0	Effluent Gross							7	SU					SU	N
KY0044164	Golden Acres WWTF	Marshall	001-2	09/30/2015	pH	00400-1-0	Effluent Gross											7	SU	SU	N
KY0044164	Golden Acres WWTF	Marshall	001-2	06/30/2015	pH	00400-1-0	Effluent Gross							7.1	SU					SU	N
KY0044164	Golden Acres WWTF	Marshall	001-2	06/30/2015	pH	00400-1-0	Effluent Gross											7.1	SU	SU	N
KY0044164	Golden Acres WWTF	Marshall	001-2	03/31/2015	pH	00400-1-0	Effluent Gross							7.6	SU					SU	N
KY0044164	Golden Acres WWTF	Marshall	001-2	03/31/2015	pH	00400-1-0	Effluent Gross											7.6	SU	SU	N
													MIN	6.3			MAX	8.2			
KY0044164	Golden Acres WWTF	Marshall	001-2	12/31/2019	Solids, total suspended	00530-1-0	Effluent Gross		2	lb/d			lb/d								N
KY0044164	Golden Acres WWTF	Marshall	001-2	12/31/2019	Solids, total suspended	00530-1-0	Effluent Gross				2	lb/d	lb/d								N
KY0044164	Golden Acres WWTF	Marshall	001-2	12/31/2019	Solids, total suspended	00530-1-0	Effluent Gross	53								46	mg/L			mg/L	Y
KY0044164	Golden Acres WWTF	Marshall	001-2	12/31/2019	Solids, total suspended	00530-1-0	Effluent Gross	60										72	mg/L	mg/L	Y
KY0044164	Golden Acres WWTF	Marshall	001-2	09/30/2019	Solids, total suspended	00530-1-0	Effluent Gross						lb/d								N
KY0044164	Golden Acres WWTF	Marshall	001-2	09/30/2019	Solids, total suspended	00530-1-0	Effluent Gross													mg/L	N
KY0044164	Golden Acres WWTF	Marshall	001-2	06/30/2019	Solids, total suspended	00530-1-0	Effluent Gross						lb/d								N
KY0044164	Golden Acres WWTF	Marshall	001-2	06/30/2019	Solids, total suspended	00530-1-0	Effluent Gross													mg/L	N
KY0044164	Golden Acres WWTF	Marshall	001-2	03/31/2019	Solids, total suspended	00530-1-0	Effluent Gross						lb/d								N
KY0044164	Golden Acres WWTF	Marshall	001-2	03/31/2019	Solids, total suspended	00530-1-0	Effluent Gross													mg/L	N
KY0044164	Golden Acres WWTF	Marshall	001-2	12/31/2018	Solids, total suspended	00530-1-0	Effluent Gross		1	lb/d			lb/d								N
KY0044164	Golden Acres WWTF	Marshall	001-2	12/31/2018	Solids, total suspended	00530-1-0	Effluent Gross				1	lb/d	lb/d								N
KY0044164	Golden Acres WWTF	Marshall	001-2	12/31/2018	Solids, total suspended	00530-1-0	Effluent Gross									8	mg/L			mg/L	N
KY0044164	Golden Acres WWTF	Marshall	001-2	12/31/2018	Solids, total suspended	00530-1-0	Effluent Gross											8	mg/L	mg/L	N
KY0044164	Golden Acres WWTF	Marshall	001-2	09/30/2018	Solids, total suspended	00530-1-0	Effluent Gross	30	8.131	lb/d			lb/d								Y
KY0044164	Golden Acres WWTF	Marshall	001-2	09/30/2018	Solids, total suspended	00530-1-0	Effluent Gross				8.131	lb/d	lb/d								N
KY0044164	Golden Acres WWTF	Marshall	001-2	09/30/2018	Solids, total suspended	00530-1-0	Effluent Gross	30								39	mg/L			mg/L	Y
KY0044164	Golden Acres WWTF	Marshall	001-2	09/30/2018	Solids, total suspended	00530-1-0	Effluent Gross											39	mg/L	mg/L	N
KY0044164	Golden Acres WWTF	Marshall	001-2	06/30/2018	Solids, total suspended	00530-1-0	Effluent Gross		0.834	lb/d			lb/d								N
KY0044164	Golden Acres WWTF	Marshall	001-2	06/30/2018	Solids, total suspended	00530-1-0	Effluent Gross				0.834	lb/d	lb/d								N
KY0044164	Golden Acres WWTF	Marshall	001-2	06/30/2018	Solids, total suspended	00530-1-0	Effluent Gross									5	mg/L			mg/L	N
KY0044164	Golden Acres WWTF	Marshall	001-2	06/30/2018	Solids, total suspended	00530-1-0	Effluent Gross											5	mg/L	mg/L	N
KY0044164	Golden Acres WWTF	Marshall	001-2	03/31/2018	Solids, total suspended	00530-1-0	Effluent Gross		0.6255	lb/d			lb/d								N
KY0044164	Golden Acres WWTF	Marshall	001-2	03/31/2018	Solids, total suspended	00530-1-0	Effluent Gross				0.6255	lb/d	lb/d								N
KY0044164	Golden Acres WWTF	Marshall	001-2	03/31/2018	Solids, total suspended	00530-1-0	Effluent Gross									5	mg/L			mg/L	N
KY0044164	Golden Acres WWTF	Marshall	001-2	03/31/2018	Solids, total suspended	00530-1-0	Effluent Gross											5	mg/L	mg/L	N
KY0044164	Golden Acres WWTF	Marshall	001-2	12/31/2017	Solids, total suspended	00530-1-0	Effluent Gross		1.125	lb/d			lb/d								N
KY0044164	Golden Acres WWTF	Marshall	001-2	12/31/2017	Solids, total suspended	00530-1-0	Effluent Gross				1.125	lb/d	lb/d								N
KY0044164	Golden Acres WWTF	Marshall	001-2	12/31/2017	Solids, total suspended	00530-1-0	Effluent Gross									9	mg/L			mg/L	N
KY0044164	Golden Acres WWTF	Marshall	001-2	12/31/2017	Solids, total suspended	00530-1-0	Effluent Gross											9	mg/L	mg/L	N
KY0044164	Golden Acres WWTF	Marshall	001-2	09/30/2017	Solids, total suspended	00530-1-0	Effluent Gross		0.417	lb/d			lb/d								N
KY0044164	Golden Acres WWTF	Marshall	001-2	09/30/2017	Solids, total suspended	00530-1-0	Effluent Gross				0.417	lb/d	lb/d								N
KY0044164	Golden Acres WWTF	Marshall	001-2	09/30/2017	Solids, total suspended	00530-1-0	Effluent Gross									5	mg/L			mg/L	N
KY0044164	Golden Acres WWTF	Marshall	001-2	09/30/2017	Solids, total suspended	00530-1-0	Effluent Gross											5	mg/L	mg/L	N
KY0044164	Golden Acres WWTF	Marshall	001-2	06/30/2017	Solids, total suspended	00530-1-0	Effluent Gross		1.125	lb/d			lb/d								N
KY0044164	Golden Acres WWTF	Marshall	001-2	06/30/2017	Solids, total suspended	00530-1-0	Effluent Gross				1.125	lb/d	lb/d								N
KY0044164	Golden Acres WWTF	Marshall	001-2	06/30/2017	Solids, total suspended	00530-1-0	Effluent Gross									5	mg/L			mg/L	N
KY0044164	Golden Acres WWTF	Marshall	001-2	06/30/2017	Solids, total suspended	00530-1-0	Effluent Gross											5	mg/L	mg/L	N
KY0044164	Golden Acres WWTF	Marshall	001-2	03/31/2017	Solids, total suspended	00530-1-0	Effluent Gross		1.125	lb/d			lb/d								N
KY0044164	Golden Acres WWTF	Marshall	001-2	03/31/2017	Solids, total suspended	00530-1-0	Effluent Gross				1.125	lb/d	lb/d								N
KY0044164	Golden Acres WWTF	Marshall	001-2	03/31/2017	Solids, total suspended	00530-1-0	Effluent Gross									5	mg/L			mg/L	N
KY0044164	Golden Acres WWTF	Marshall	001-2	03/31/2017	Solids, total suspended	00530-1-0	Effluent Gross											5	mg/L	mg/L	N
KY0044164	Golden Acres WWTF	Marshall	001-2	12/31/2016	Solids, total suspended	00530-1-0	Effluent Gross		0.8757	lb/d			lb/d								N
KY0044164	Golden Acres WWTF	Marshall	001-2	12/31/2016	Solids, total suspended	00530-1-0	Effluent Gross				0.8757	lb/d	lb/d								N
KY0044164	Golden Acres WWTF	Marshall	001-2	12/31/2016	Solids, total suspended	00530-1-0	Effluent Gross									5	mg/L			mg/L	N

KY0044164	Golden Acres WWTF	Marshall	001-2	12/31/2016	Solids, total suspended	00530-1-0	Effluent Gross												5	mg/L	mg/L	N
KY0044164	Golden Acres WWTF	Marshall	001-2	09/30/2016	Solids, total suspended	00530-1-0	Effluent Gross		0.6255	lb/d			lb/d									N
KY0044164	Golden Acres WWTF	Marshall	001-2	09/30/2016	Solids, total suspended	00530-1-0	Effluent Gross				0.6255	lb/d	lb/d									N
KY0044164	Golden Acres WWTF	Marshall	001-2	09/30/2016	Solids, total suspended	00530-1-0	Effluent Gross										5	mg/L			mg/L	N
KY0044164	Golden Acres WWTF	Marshall	001-2	09/30/2016	Solids, total suspended	00530-1-0	Effluent Gross												5	mg/L	mg/L	N
KY0044164	Golden Acres WWTF	Marshall	001-2	06/30/2016	Solids, total suspended	00530-1-0	Effluent Gross		0.5254	lb/d			lb/d									N
KY0044164	Golden Acres WWTF	Marshall	001-2	06/30/2016	Solids, total suspended	00530-1-0	Effluent Gross				0.5254	lb/d	lb/d									N
KY0044164	Golden Acres WWTF	Marshall	001-2	06/30/2016	Solids, total suspended	00530-1-0	Effluent Gross										7	mg/L			mg/L	N
KY0044164	Golden Acres WWTF	Marshall	001-2	06/30/2016	Solids, total suspended	00530-1-0	Effluent Gross												7	mg/L	mg/L	N
KY0044164	Golden Acres WWTF	Marshall	001-2	03/31/2016	Solids, total suspended	00530-1-0	Effluent Gross		1.251	lb/d			lb/d									N
KY0044164	Golden Acres WWTF	Marshall	001-2	03/31/2016	Solids, total suspended	00530-1-0	Effluent Gross				1.251	lb/d	lb/d									N
KY0044164	Golden Acres WWTF	Marshall	001-2	03/31/2016	Solids, total suspended	00530-1-0	Effluent Gross										5	mg/L			mg/L	N
KY0044164	Golden Acres WWTF	Marshall	001-2	03/31/2016	Solids, total suspended	00530-1-0	Effluent Gross												5	mg/L	mg/L	N
KY0044164	Golden Acres WWTF	Marshall	001-2	12/31/2015	Solids, total suspended	00530-1-0	Effluent Gross		3.336	lb/d			lb/d									N
KY0044164	Golden Acres WWTF	Marshall	001-2	12/31/2015	Solids, total suspended	00530-1-0	Effluent Gross				3.336	lb/d	lb/d									N
KY0044164	Golden Acres WWTF	Marshall	001-2	12/31/2015	Solids, total suspended	00530-1-0	Effluent Gross										16	mg/L			mg/L	N
KY0044164	Golden Acres WWTF	Marshall	001-2	12/31/2015	Solids, total suspended	00530-1-0	Effluent Gross												16	mg/L	mg/L	N
KY0044164	Golden Acres WWTF	Marshall	001-2	09/30/2015	Solids, total suspended	00530-1-0	Effluent Gross		0.7506	lb/d			lb/d									N
KY0044164	Golden Acres WWTF	Marshall	001-2	09/30/2015	Solids, total suspended	00530-1-0	Effluent Gross				0.7506	lb/d	lb/d									N
KY0044164	Golden Acres WWTF	Marshall	001-2	09/30/2015	Solids, total suspended	00530-1-0	Effluent Gross										5	mg/L			mg/L	N
KY0044164	Golden Acres WWTF	Marshall	001-2	09/30/2015	Solids, total suspended	00530-1-0	Effluent Gross												5	mg/L	mg/L	N
KY0044164	Golden Acres WWTF	Marshall	001-2	06/30/2015	Solids, total suspended	00530-1-0	Effluent Gross		1.042	lb/d			lb/d									N
KY0044164	Golden Acres WWTF	Marshall	001-2	06/30/2015	Solids, total suspended	00530-1-0	Effluent Gross				1.042	lb/d	lb/d									N
KY0044164	Golden Acres WWTF	Marshall	001-2	06/30/2015	Solids, total suspended	00530-1-0	Effluent Gross										5	mg/L			mg/L	N
KY0044164	Golden Acres WWTF	Marshall	001-2	06/30/2015	Solids, total suspended	00530-1-0	Effluent Gross												5	mg/L	mg/L	N
KY0044164	Golden Acres WWTF	Marshall	001-2	03/31/2015	Solids, total suspended	00530-1-0	Effluent Gross		1.276	lb/d			lb/d									N
KY0044164	Golden Acres WWTF	Marshall	001-2	03/31/2015	Solids, total suspended	00530-1-0	Effluent Gross				1.276	lb/d	lb/d									N
KY0044164	Golden Acres WWTF	Marshall	001-2	03/31/2015	Solids, total suspended	00530-1-0	Effluent Gross										9	mg/L			mg/L	N
KY0044164	Golden Acres WWTF	Marshall	001-2	03/31/2015	Solids, total suspended	00530-1-0	Effluent Gross												9	mg/L	mg/L	N
								average	1.53321765		1.5332176						10.82352941		12.35294118			
KY0044164	Golden Acres WWTF	Marshall	001-2	12/31/2019	Nitrogen, ammonia total [as	00610-1-1	Effluent Gross		NODI 9		NODI 9		lb/d									N
KY0044164	Golden Acres WWTF	Marshall	001-2	12/31/2019	Nitrogen, ammonia total [as	00610-1-1	Effluent Gross										NODI 9		NODI 9		mg/L	N
KY0044164	Golden Acres WWTF	Marshall	001-2	09/30/2019	Nitrogen, ammonia total [as	00610-1-1	Effluent Gross						lb/d									N
KY0044164	Golden Acres WWTF	Marshall	001-2	09/30/2019	Nitrogen, ammonia total [as	00610-1-1	Effluent Gross														mg/L	N
KY0044164	Golden Acres WWTF	Marshall	001-2	06/30/2019	Nitrogen, ammonia total [as	00610-1-1	Effluent Gross						lb/d									N
KY0044164	Golden Acres WWTF	Marshall	001-2	06/30/2019	Nitrogen, ammonia total [as	00610-1-1	Effluent Gross														mg/L	N
KY0044164	Golden Acres WWTF	Marshall	001-2	03/31/2019	Nitrogen, ammonia total [as	00610-1-1	Effluent Gross						lb/d									N
KY0044164	Golden Acres WWTF	Marshall	001-2	03/31/2019	Nitrogen, ammonia total [as	00610-1-1	Effluent Gross														mg/L	N
KY0044164	Golden Acres WWTF	Marshall	001-2	12/31/2018	Nitrogen, ammonia total [as	00610-1-1	Effluent Gross		NODI 9		NODI 9		lb/d									N
KY0044164	Golden Acres WWTF	Marshall	001-2	12/31/2018	Nitrogen, ammonia total [as	00610-1-1	Effluent Gross										NODI 9		NODI 9		mg/L	N
KY0044164	Golden Acres WWTF	Marshall	001-2	09/30/2018	Nitrogen, ammonia total [as	00610-1-1	Effluent Gross	176	2.293	lb/d			lb/d									Y
KY0044164	Golden Acres WWTF	Marshall	001-2	09/30/2018	Nitrogen, ammonia total [as	00610-1-1	Effluent Gross	83			2.293	lb/d	lb/d									Y
KY0044164	Golden Acres WWTF	Marshall	001-2	09/30/2018	Nitrogen, ammonia total [as	00610-1-1	Effluent Gross	175									11	mg/L			mg/L	Y
KY0044164	Golden Acres WWTF	Marshall	001-2	09/30/2018	Nitrogen, ammonia total [as	00610-1-1	Effluent Gross	83											11	mg/L	mg/L	Y
KY0044164	Golden Acres WWTF	Marshall	001-2	06/30/2018	Nitrogen, ammonia total [as	00610-1-1	Effluent Gross	55	1.284	lb/d			lb/d									Y
KY0044164	Golden Acres WWTF	Marshall	001-2	06/30/2018	Nitrogen, ammonia total [as	00610-1-1	Effluent Gross	3			1.284	lb/d	lb/d									Y
KY0044164	Golden Acres WWTF	Marshall	001-2	06/30/2018	Nitrogen, ammonia total [as	00610-1-1	Effluent Gross	93									7.7	mg/L			mg/L	Y
KY0044164	Golden Acres WWTF	Marshall	001-2	06/30/2018	Nitrogen, ammonia total [as	00610-1-1	Effluent Gross	28											7.7	mg/L	mg/L	Y
KY0044164	Golden Acres WWTF	Marshall	001-2	03/31/2018	Nitrogen, ammonia total [as	00610-1-1	Effluent Gross		NODI 9		NODI 9		lb/d									N
KY0044164	Golden Acres WWTF	Marshall	001-2	03/31/2018	Nitrogen, ammonia total [as	00610-1-1	Effluent Gross										NODI 9		NODI 9		mg/L	N
KY0044164	Golden Acres WWTF	Marshall	001-2	12/31/2017	Nitrogen, ammonia total [as	00610-1-1	Effluent Gross		NODI 9		NODI 9		lb/d									N
KY0044164	Golden Acres WWTF	Marshall	001-2	12/31/2017	Nitrogen, ammonia total [as	00610-1-1	Effluent Gross										NODI 9		NODI 9		mg/L	N
KY0044164	Golden Acres WWTF	Marshall	001-2	09/30/2017	Nitrogen, ammonia total [as	00610-1-1	Effluent Gross		0.6421	lb/d			lb/d									N
KY0044164	Golden Acres WWTF	Marshall	001-2	09/30/2017	Nitrogen, ammonia total [as	00610-1-1	Effluent Gross				0.6421	lb/d	lb/d									N
KY0044164	Golden Acres WWTF	Marshall	001-2	09/30/2017	Nitrogen, ammonia total [as	00610-1-1	Effluent Gross	93									7.7	mg/L			mg/L	Y
KY0044164	Golden Acres WWTF	Marshall	001-2	09/30/2017	Nitrogen, ammonia total [as	00610-1-1	Effluent Gross	28											7.7	mg/L	mg/L	Y
KY0044164	Golden Acres WWTF	Marshall	001-2	06/30/2017	Nitrogen, ammonia total [as	00610-1-1	Effluent Gross		0.0562	lb/d			lb/d									N
KY0044164	Golden Acres WWTF	Marshall	001-2	06/30/2017	Nitrogen, ammonia total [as	00610-1-1	Effluent Gross				0.0562	lb/d	lb/d									N
KY0044164	Golden Acres WWTF	Marshall	001-2	06/30/2017	Nitrogen, ammonia total [as	00610-1-1	Effluent Gross										0.25	mg/L			mg/L	N
KY0044164	Golden Acres WWTF	Marshall	001-2	06/30/2017	Nitrogen, ammonia total [as	00610-1-1	Effluent Gross												0.25	mg/L	mg/L	N
KY0044164	Golden Acres WWTF	Marshall	001-2	03/31/2017	Nitrogen, ammonia total [as	00610-1-1	Effluent Gross		NODI 9		NODI 9		lb/d									N
KY0044164	Golden Acres WWTF	Marshall	001-2	03/31/2017	Nitrogen, ammonia total [as	00610-1-1	Effluent Gross										NODI 9		NODI 9		mg/L	N
KY0044164	Golden Acres WWTF	Marshall	001-2	12/31/2016	Nitrogen, ammonia total [as	00610-1-1	Effluent Gross		NODI 9		NODI 9		lb/d									N
KY0044164	Golden Acres WWTF	Marshall	001-2	12/31/2016	Nitrogen, ammonia total [as	00610-1-1	Effluent Gross										NODI 9		NODI 9		mg/L	N
KY0044164	Golden Acres WWTF	Marshall	001-2	09/30/2016	Nitrogen, ammonia total [as	00610-1-1	Effluent Gross		0.0312	lb/d			lb/d									N
KY0044164	Golden Acres WWTF	Marshall	001-2	09/30/2016	Nitrogen, ammonia total [as	00610-1-1	Effluent Gross				0.0312	lb/d	lb/d									N
KY0044164	Golden Acres WWTF	Marshall	001-2	09/30/2016	Nitrogen, ammonia total [as	00610-1-1	Effluent Gross										0.25	mg/L			mg/L	N
KY0044164	Golden Acres WWTF	Marshall	001-2	09/30/2016	Nitrogen, ammonia total [as	00610-1-1	Effluent Gross												0.25	mg/L	mg/L	N
KY0044164	Golden Acres WWTF	Marshall	001-2	06/30/2016	Nitrogen, ammonia total [as	00610-1-1	Effluent Gross	108	1.726	lb/d			lb/d									Y
KY0044164	Golden Acres WWTF	Marshall	001-2	06/30/2016	Nitrogen, ammonia total [as	00610-1-1	Effluent Gross	38			1.726	lb/d	lb/d									Y
KY0044164	Golden Acres WWTF	Marshall	001-2	06/30/2016	Nitrogen, ammonia total [as	00610-1-1	Effluent Gross	475									23	mg/L			mg/L	Y
KY0044164	Golden Acres WWTF	Marshall	001-2	06/30/2016	Nitrogen, ammonia total [as	00610-1-1	Effluent Gross	283											23	mg/L	mg/L	Y
KY0044164	Golden Acres WWTF	Marshall	001-2	03/31/2016	Nitrogen, ammonia total [as	00610-1-1	Effluent Gross		NODI 9		NODI 9		lb/d									N
KY0044164	Golden Acres WWTF	Marshall	001-2	03/31/2016	Nitrogen, ammonia total [as	00610-1-1	Effluent Gross										NODI 9		NODI 9		mg/L	N
KY0044164	Golden Acres WWTF	Marshall	001-2	12/31/2015	Nitrogen, ammonia total [as	00610-1-1	Effluent Gross		NODI 9		NODI 9		lb/d									N
KY0044164	Golden Acres WWTF	Marshall	001-2	12/31/2015	Nitrogen, ammonia total [as	00610-1-1	Effluent Gross										NODI 9		NODI 9		mg/L	N
KY0044164	Golden Acres WWTF	Marshall	001-2	09/30/2015	Nitrogen, ammonia total [as	00610-1-1	Effluent Gross	19	0.9907	lb/d			lb/d									Y
KY0044164	Golden Acres WWTF	Marshall	001-2	09/30/2015	Nitrogen, ammonia total [as	00610-1-1	Effluent Gross				0.9907	lb/d	lb/d									N
KY0044164	Golden Acres WWTF	Marshall	001-2	09/30/2015	Nitrogen, ammonia total [as	00610-1-1	Effluent Gross	65									6.6	mg/L			mg/L	Y
KY0044164	Golden Acres WWTF	Marshall	001-2	09/30/2015	Nitrogen, ammonia total [as	00610-1-1	Effluent Gross	10											6.6	mg/L	mg/L	Y
KY0044164	Golden Acres WWTF	Marshall	001-2	06/30/2015	Nitrogen, ammonia total [as	00610-1-1	Effluent Gross		0.0521	lb/d			lb/d									N
KY0044164	Golden Acres WWTF	Marshall	001-2	06/30/2015	Nitrogen, ammonia total [as	00610-1-1	Effluent Gross				0.0521	lb/d	lb/d									N
KY0044164	Golden Acres WWTF	Marshall	001-2	06/30/2015	Nitrogen, ammonia total [as	00610-1-1	Effluent Gross										0.25	mg/L			mg/L	N
KY0044164	Golden Acres WWTF	Marshall	001-2	06/30/2015	Nitrogen, ammonia total [as	00610-1-1	Effluent Gross												0.25	mg/L	mg/L	N
KY0044164	Golden Acres WWTF	Marshall	001-2	03/31/2015	Nitrogen, ammonia total [as	00610-1-1	Effluent Gross		NODI 9		NODI 9		lb/d									N
KY0044164	Golden Acres WWTF	Marshall	001-2	03/31/2015	Nitrogen, ammonia total [as	00610-1-1	Effluent Gross										NODI 9		NODI 9		mg/L	N
								average	0.8844125		0.8844125						7.09375		7.09375			
KY0044164	Golden Acres WWTF	Marshall	001-2	12/31/2019	Nitrogen, ammonia total [as	00610-1-2	Effluent Gross		0.4541	lb/d			lb/d									N
KY0044164	Golden Acres WWTF	Marshall	001-2	12/31/2019	Nitrogen, ammonia total [as	00610-1-2	Effluent Gross				0.4541	lb/d	lb/d									N
KY0044164	Golden Acres WWTF	Marshall	001-2	12/31/2019	Nitrogen, ammonia total [as	00610-1-2	Effluent Gross	82									18.15	mg/L			mg/L	Y
KY0044164	Golden Acres WWTF	Marshall	001-2	12/31/2019	Nitrogen, ammonia total [as	00610-1-2	Effluent Gross	113											32	mg/L	mg/L	Y
KY0044164	Golden Acres WWTF	Marshall	001-2	09/30/2019	Nitrogen, ammonia total [as	00610-1-2	Effluent Gross						lb/d									N
KY0044164	Golden Acres WWTF	Marshall	001-2	09/30/2019	Nitrogen, ammonia total [as	00610-1-2	Effluent Gross														mg/L	N
KY0044164	Golden Acres WWTF	Marshall	001-2	06/30/2019	Nitrogen, ammonia total [as	00610-1-2	Effluent Gross						lb/d									N
KY0044164	Golden Acres WWTF	Marshall	001-2	06/30/2019	Nitrogen, ammonia total [as	00610-1-2	Effluent Gross														mg/L	N
KY0044164	Golden Acres WWTF	Marshall	001-2	03/31/2019	Nitrogen, ammonia total [as	00610-1-2	Effluent Gross						lb/d									N
KY0044164	Golden Acres WWTF	Marshall	001-2	03/31/2019	Nitrogen, ammonia total [as	00610-1-2	Effluent Gross														mg/L	N
KY0044164	Golden Acres WWTF	Marshall	001-2	12/31/2018	Nitrogen, ammonia total [as	00610-1-2	Effluent Gross		0.0875	lb/d			lb/d									N
KY0044164	Golden Acres WWTF	Marshall	001-2	12/31/2018	Nitrogen, ammonia total [as	00610-1-2	Effluent Gross				0.0875	lb/d	lb/d									N
KY0044164	Golden Acres WWTF	Marshall	001-2	12/31/2018	Nitrogen, ammonia total [as	00610-1-2	Effluent Gross										0.7	mg/L			mg/L	N
KY0044164	Golden Acres WWTF	Marshall	001-2	12/31/2018	Nitrogen, ammonia total [as	00610-1-2	Effluent Gross												0.7	mg/L	mg/L	N
KY0044164	Golden Acres WWTF	Marshall	001-2	09/30/2018	Nitrogen, ammonia total [as	00610-1-2	Effluent Gross		NODI 9		NODI 9		lb/d									N
KY0044164	Golden Acres WWTF	Marshall	001-2	09/30/2018	Nitrogen, ammonia total [as	00610-1-2	Effluent Gross										NODI 9		NODI 9		mg/L	N
KY0044164	Golden Acres WWTF	Marshall	001-2	06/30/2018	Nitrogen, ammonia total [as	00610-1-2	Effluent Gross		NODI 9		NODI 9		lb/d									N
KY0044164	Golden Acres WWTF	Marshall	001-2	06/30/2018	Nitrogen, ammonia total [as	00610-1-2	Effluent Gross										NODI 9		NODI 9		mg/L	N
KY0044164	Golden Acres WWTF	Marshall	001-2	03/31/2018	Nitrogen, ammonia total [as	00610-1-2	Effluent Gross		0.055	lb/d			lb/d									N
KY0044164	Golden Acres WWTF	Marshall	001-2	03/31/2018	Nitrogen, ammonia total [as	00610-1-2	Effluent Gross				0.055	lb/d	lb/d									N
KY0044164	Golden Acres WWTF	Marshall	001-2	03/31/2018	Nitrogen, ammonia total [as	00610-1-2	Effluent Gross										5	mg/L			mg/L	N
KY0044164	Golden Acres WWTF	Marshall	001-2	03/31/2018	Nitrogen, ammonia total [as	00610-1-2	Effluent Gross												5	mg/L	mg/L	N

KY0044164	Golden Acres WWTF	Marshall	001-2	12/31/2017	Nitrogen, ammonia total [as	00610-1-2	Effluent Gross		0.2752	lb/d			lb/d							N
KY0044164	Golden Acres WWTF	Marshall	001-2	12/31/2017	Nitrogen, ammonia total [as	00610-1-2	Effluent Gross				0.2752	lb/d	lb/d							N
KY0044164	Golden Acres WWTF	Marshall	001-2	12/31/2017	Nitrogen, ammonia total [as	00610-1-2	Effluent Gross									2.2	mg/L			mg/L	N
KY0044164	Golden Acres WWTF	Marshall	001-2	12/31/2017	Nitrogen, ammonia total [as	00610-1-2	Effluent Gross											2.2	mg/L	mg/L	N
KY0044164	Golden Acres WWTF	Marshall	001-2	09/30/2017	Nitrogen, ammonia total [as	00610-1-2	Effluent Gross		NODI 9		NODI 9		lb/d								N
KY0044164	Golden Acres WWTF	Marshall	001-2	09/30/2017	Nitrogen, ammonia total [as	00610-1-2	Effluent Gross									NODI 9		NODI 9		mg/L	N
KY0044164	Golden Acres WWTF	Marshall	001-2	06/30/2017	Nitrogen, ammonia total [as	00610-1-2	Effluent Gross		NODI 9		NODI 9		lb/d								N
KY0044164	Golden Acres WWTF	Marshall	001-2	06/30/2017	Nitrogen, ammonia total [as	00610-1-2	Effluent Gross									NODI 9		NODI 9		mg/L	N
KY0044164	Golden Acres WWTF	Marshall	001-2	03/31/2017	Nitrogen, ammonia total [as	00610-1-2	Effluent Gross		0.0562	lb/d			lb/d								N
KY0044164	Golden Acres WWTF	Marshall	001-2	03/31/2017	Nitrogen, ammonia total [as	00610-1-2	Effluent Gross				0.0562	lb/d	lb/d								N
KY0044164	Golden Acres WWTF	Marshall	001-2	03/31/2017	Nitrogen, ammonia total [as	00610-1-2	Effluent Gross									0.25	mg/L			mg/L	N
KY0044164	Golden Acres WWTF	Marshall	001-2	03/31/2017	Nitrogen, ammonia total [as	00610-1-2	Effluent Gross											0.25	mg/L	mg/L	N
KY0044164	Golden Acres WWTF	Marshall	001-2	12/31/2016	Nitrogen, ammonia total [as	00610-1-2	Effluent Gross		0.0437	lb/d			lb/d								N
KY0044164	Golden Acres WWTF	Marshall	001-2	12/31/2016	Nitrogen, ammonia total [as	00610-1-2	Effluent Gross				0.0437	lb/d	lb/d								N
KY0044164	Golden Acres WWTF	Marshall	001-2	12/31/2016	Nitrogen, ammonia total [as	00610-1-2	Effluent Gross									0.25	mg/L			mg/L	N
KY0044164	Golden Acres WWTF	Marshall	001-2	12/31/2016	Nitrogen, ammonia total [as	00610-1-2	Effluent Gross											0.25	mg/L	mg/L	N
KY0044164	Golden Acres WWTF	Marshall	001-2	09/30/2016	Nitrogen, ammonia total [as	00610-1-2	Effluent Gross		NODI 9		NODI 9		lb/d								N
KY0044164	Golden Acres WWTF	Marshall	001-2	09/30/2016	Nitrogen, ammonia total [as	00610-1-2	Effluent Gross									NODI 9		NODI 9		mg/L	N
KY0044164	Golden Acres WWTF	Marshall	001-2	06/30/2016	Nitrogen, ammonia total [as	00610-1-2	Effluent Gross		NODI 9		NODI 9		lb/d								N
KY0044164	Golden Acres WWTF	Marshall	001-2	06/30/2016	Nitrogen, ammonia total [as	00610-1-2	Effluent Gross									NODI 9		NODI 9		mg/L	N
KY0044164	Golden Acres WWTF	Marshall	001-2	03/31/2016	Nitrogen, ammonia total [as	00610-1-2	Effluent Gross		0.08	lb/d			lb/d								N
KY0044164	Golden Acres WWTF	Marshall	001-2	03/31/2016	Nitrogen, ammonia total [as	00610-1-2	Effluent Gross				0.08	lb/d	lb/d								N
KY0044164	Golden Acres WWTF	Marshall	001-2	03/31/2016	Nitrogen, ammonia total [as	00610-1-2	Effluent Gross									0.32	mg/L			mg/L	N
KY0044164	Golden Acres WWTF	Marshall	001-2	03/31/2016	Nitrogen, ammonia total [as	00610-1-2	Effluent Gross											0.32	mg/L	mg/L	N
KY0044164	Golden Acres WWTF	Marshall	001-2	12/31/2015	Nitrogen, ammonia total [as	00610-1-2	Effluent Gross		0.0521	lb/d			lb/d								N
KY0044164	Golden Acres WWTF	Marshall	001-2	12/31/2015	Nitrogen, ammonia total [as	00610-1-2	Effluent Gross				0.0521	lb/d	lb/d								N
KY0044164	Golden Acres WWTF	Marshall	001-2	12/31/2015	Nitrogen, ammonia total [as	00610-1-2	Effluent Gross									0.25	mg/L			mg/L	N
KY0044164	Golden Acres WWTF	Marshall	001-2	12/31/2015	Nitrogen, ammonia total [as	00610-1-2	Effluent Gross											0.25	mg/L	mg/L	N
KY0044164	Golden Acres WWTF	Marshall	001-2	09/30/2015	Nitrogen, ammonia total [as	00610-1-2	Effluent Gross		0.7506	lb/d			lb/d								N
KY0044164	Golden Acres WWTF	Marshall	001-2	09/30/2015	Nitrogen, ammonia total [as	00610-1-2	Effluent Gross				0.7506	lb/d	lb/d								N
KY0044164	Golden Acres WWTF	Marshall	001-2	09/30/2015	Nitrogen, ammonia total [as	00610-1-2	Effluent Gross									5	mg/L			mg/L	N
KY0044164	Golden Acres WWTF	Marshall	001-2	09/30/2015	Nitrogen, ammonia total [as	00610-1-2	Effluent Gross											5	mg/L	mg/L	N
KY0044164	Golden Acres WWTF	Marshall	001-2	06/30/2015	Nitrogen, ammonia total [as	00610-1-2	Effluent Gross		NODI 9		NODI 9		lb/d								N
KY0044164	Golden Acres WWTF	Marshall	001-2	06/30/2015	Nitrogen, ammonia total [as	00610-1-2	Effluent Gross									NODI 9		NODI 9		mg/L	N
KY0044164	Golden Acres WWTF	Marshall	001-2	03/31/2015	Nitrogen, ammonia total [as	00610-1-2	Effluent Gross	9	2.268	lb/d			lb/d								Y
KY0044164	Golden Acres WWTF	Marshall	001-2	03/31/2015	Nitrogen, ammonia total [as	00610-1-2	Effluent Gross				2.268	lb/d	lb/d								N
KY0044164	Golden Acres WWTF	Marshall	001-2	03/31/2015	Nitrogen, ammonia total [as	00610-1-2	Effluent Gross	60								16	mg/L			mg/L	Y
KY0044164	Golden Acres WWTF	Marshall	001-2	03/31/2015	Nitrogen, ammonia total [as	00610-1-2	Effluent Gross	7										16	mg/L	mg/L	Y
								average	0.41224		0.41224					4.812		6.197			
KY0044164	Golden Acres WWTF	Marshall	001-2	12/31/2019	Flow, in conduit or thru	50050-1-0	Effluent Gross		0.003	MGD			MGD								N
KY0044164	Golden Acres WWTF	Marshall	001-2	12/31/2019	Flow, in conduit or thru	50050-1-0	Effluent Gross				0.003	MGD	MGD								N
KY0044164	Golden Acres WWTF	Marshall	001-2	09/30/2019	Flow, in conduit or thru	50050-1-0	Effluent Gross						MGD								N
KY0044164	Golden Acres WWTF	Marshall	001-2	06/30/2019	Flow, in conduit or thru	50050-1-0	Effluent Gross						MGD								N
KY0044164	Golden Acres WWTF	Marshall	001-2	03/31/2019	Flow, in conduit or thru	50050-1-0	Effluent Gross						MGD								N
KY0044164	Golden Acres WWTF	Marshall	001-2	12/31/2018	Flow, in conduit or thru	50050-1-0	Effluent Gross		0.015	MGD			MGD								N
KY0044164	Golden Acres WWTF	Marshall	001-2	12/31/2018	Flow, in conduit or thru	50050-1-0	Effluent Gross				0.015	MGD	MGD								N
KY0044164	Golden Acres WWTF	Marshall	001-2	09/30/2018	Flow, in conduit or thru	50050-1-0	Effluent Gross		0.025	MGD			MGD								N
KY0044164	Golden Acres WWTF	Marshall	001-2	09/30/2018	Flow, in conduit or thru	50050-1-0	Effluent Gross				0.025	MGD	MGD								N
KY0044164	Golden Acres WWTF	Marshall	001-2	06/30/2018	Flow, in conduit or thru	50050-1-0	Effluent Gross		0.02	MGD			MGD								N
KY0044164	Golden Acres WWTF	Marshall	001-2	06/30/2018	Flow, in conduit or thru	50050-1-0	Effluent Gross				0.02	MGD	MGD								N
KY0044164	Golden Acres WWTF	Marshall	001-2	03/31/2018	Flow, in conduit or thru	50050-1-0	Effluent Gross		0.015	MGD			MGD								N
KY0044164	Golden Acres WWTF	Marshall	001-2	03/31/2018	Flow, in conduit or thru	50050-1-0	Effluent Gross				0.015	MGD	MGD								N
KY0044164	Golden Acres WWTF	Marshall	001-2	12/31/2017	Flow, in conduit or thru	50050-1-0	Effluent Gross		0.015	MGD			MGD								N
KY0044164	Golden Acres WWTF	Marshall	001-2	12/31/2017	Flow, in conduit or thru	50050-1-0	Effluent Gross				0.015	MGD	MGD								N
KY0044164	Golden Acres WWTF	Marshall	001-2	09/30/2017	Flow, in conduit or thru	50050-1-0	Effluent Gross		0.01	MGD			MGD								N
KY0044164	Golden Acres WWTF	Marshall	001-2	09/30/2017	Flow, in conduit or thru	50050-1-0	Effluent Gross				0.01	MGD	MGD								N
KY0044164	Golden Acres WWTF	Marshall	001-2	06/30/2017	Flow, in conduit or thru	50050-1-0	Effluent Gross		0.027	MGD			MGD								N
KY0044164	Golden Acres WWTF	Marshall	001-2	06/30/2017	Flow, in conduit or thru	50050-1-0	Effluent Gross				0.027	MGD	MGD								N
KY0044164	Golden Acres WWTF	Marshall	001-2	03/31/2017	Flow, in conduit or thru	50050-1-0	Effluent Gross		0.027	MGD			MGD								N
KY0044164	Golden Acres WWTF	Marshall	001-2	03/31/2017	Flow, in conduit or thru	50050-1-0	Effluent Gross				0.027	MGD	MGD								N
KY0044164	Golden Acres WWTF	Marshall	001-2	12/31/2016	Flow, in conduit or thru	50050-1-0	Effluent Gross		0.021	MGD			MGD								N
KY0044164	Golden Acres WWTF	Marshall	001-2	12/31/2016	Flow, in conduit or thru	50050-1-0	Effluent Gross				0.021	MGD	MGD								N
KY0044164	Golden Acres WWTF	Marshall	001-2	09/30/2016	Flow, in conduit or thru	50050-1-0	Effluent Gross		0.015	MGD			MGD								N
KY0044164	Golden Acres WWTF	Marshall	001-2	09/30/2016	Flow, in conduit or thru	50050-1-0	Effluent Gross				0.015	MGD	MGD								N
KY0044164	Golden Acres WWTF	Marshall	001-2	06/30/2016	Flow, in conduit or thru	50050-1-0	Effluent Gross		0.009	MGD			MGD								N
KY0044164	Golden Acres WWTF	Marshall	001-2	06/30/2016	Flow, in conduit or thru	50050-1-0	Effluent Gross				0.009	MGD	MGD								N
KY0044164	Golden Acres WWTF	Marshall	001-2	03/31/2016	Flow, in conduit or thru	50050-1-0	Effluent Gross		0.03	MGD			MGD								N
KY0044164	Golden Acres WWTF	Marshall	001-2	03/31/2016	Flow, in conduit or thru	50050-1-0	Effluent Gross				0.03	MGD	MGD								N
KY0044164	Golden Acres WWTF	Marshall	001-2	12/31/2015	Flow, in conduit or thru	50050-1-0	Effluent Gross		0.025	MGD			MGD								N
KY0044164	Golden Acres WWTF	Marshall	001-2	12/31/2015	Flow, in conduit or thru	50050-1-0	Effluent Gross				0.025	MGD	MGD								N
KY0044164	Golden Acres WWTF	Marshall	001-2	09/30/2015	Flow, in conduit or thru	50050-1-0	Effluent Gross		0.018	MGD			MGD								N
KY0044164	Golden Acres WWTF	Marshall	001-2	09/30/2015	Flow, in conduit or thru	50050-1-0	Effluent Gross				0.018	MGD	MGD								N
KY0044164	Golden Acres WWTF	Marshall	001-2	06/30/2015	Flow, in conduit or thru	50050-1-0	Effluent Gross		0.025	MGD			MGD								N
KY0044164	Golden Acres WWTF	Marshall	001-2	06/30/2015	Flow, in conduit or thru	50050-1-0	Effluent Gross				0.025	MGD	MGD								N
KY0044164	Golden Acres WWTF	Marshall	001-2	03/31/2015	Flow, in conduit or thru	50050-1-0	Effluent Gross		0.017	MGD			MGD								N
KY0044164	Golden Acres WWTF	Marshall	001-2	03/31/2015	Flow, in conduit or thru	50050-1-0	Effluent Gross				0.017	MGD	MGD								N
								average	0.01864706		0.0186471										
KY0044164	Golden Acres WWTF	Marshall	001-2	12/31/2019	Chlorine, total residual	50060-1-0	Effluent Gross	3173								0.36	mg/L			mg/L	Y
KY0044164	Golden Acres WWTF	Marshall	001-2	12/31/2019	Chlorine, total residual	50060-1-0	Effluent Gross	1795										0.36	mg/L	mg/L	Y
KY0044164	Golden Acres WWTF	Marshall	001-2	09/30/2019	Chlorine, total residual	50060-1-0	Effluent Gross													mg/L	N
KY0044164	Golden Acres WWTF	Marshall	001-2	06/30/2019	Chlorine, total residual	50060-1-0	Effluent Gross													mg/L	N
KY0044164	Golden Acres WWTF	Marshall	001-2	03/31/2019	Chlorine, total residual	50060-1-0	Effluent Gross													mg/L	N
KY0044164	Golden Acres WWTF	Marshall	001-2	12/31/2018	Chlorine, total residual	50060-1-0	Effluent Gross									0	mg/L			mg/L	N
KY0044164	Golden Acres WWTF	Marshall	001-2	12/31/2018	Chlorine, total residual	50060-1-0	Effluent Gross											0	mg/L	mg/L	N
KY0044164	Golden Acres WWTF	Marshall	001-2	09/30/2018	Chlorine, total residual	50060-1-0	Effluent Gross									0.01	mg/L			mg/L	N
KY0044164	Golden Acres WWTF	Marshall	001-2	09/30/2018	Chlorine, total residual	50060-1-0	Effluent Gross											0.01	mg/L	mg/L	N
KY0044164	Golden Acres WWTF	Marshall	001-2	06/30/2018	Chlorine, total residual	50060-1-0	Effluent Gross									0	mg/L			mg/L	N
KY0044164	Golden Acres WWTF	Marshall	001-2	06/30/2018	Chlorine, total residual	50060-1-0	Effluent Gross											0	mg/L	mg/L	N
KY0044164	Golden Acres WWTF	Marshall	001-2	03/31/2018	Chlorine, total residual	50060-1-0	Effluent Gross									0	mg/L			mg/L	N
KY0044164	Golden Acres WWTF	Marshall	001-2	03/31/2018	Chlorine, total residual	50060-1-0	Effluent Gross											0	mg/L	mg/L	N
KY0044164	Golden Acres WWTF	Marshall	001-2	12/31/2017	Chlorine, total residual	50060-1-0	Effluent Gross									0	mg/L			mg/L	N
KY0044164	Golden Acres WWTF	Marshall	001-2	12/31/2017	Chlorine, total residual	50060-1-0	Effluent Gross											0	mg/L	mg/L	N
KY0044164	Golden Acres WWTF	Marshall	001-2	09/30/2017	Chlorine, total residual	50060-1-0	Effluent Gross									0	mg/L			mg/L	N
KY0044164	Golden Acres WWTF	Marshall	001-2	09/30/2017	Chlorine, total residual	50060-1-0	Effluent Gross											0	mg/L	mg/L	N
KY0044164	Golden Acres WWTF	Marshall	001-2	06/30/2017	Chlorine, total residual	50060-1-0	Effluent Gross									0	mg/L			mg/L	N
KY0044164	Golden Acres WWTF	Marshall	001-2	06/30/2017	Chlorine, total residual	50060-1-0	Effluent Gross											0	mg/L	mg/L	N
KY0044164	Golden Acres WWTF	Marshall	001-2	03/31/2017	Chlorine, total residual	50060-1-0	Effluent Gross									0	mg/L			mg/L	N
KY0044164	Golden Acres WWTF	Marshall	001-2	03/31/2017	Chlorine, total residual	50060-1-0	Effluent Gross											0	mg/L	mg/L	N
KY0044164	Golden Acres WWTF	Marshall	001-2	12/31/2016	Chlorine, total residual	50060-1-0	Effluent Gross									0	mg/L			mg/L	N
KY0044164	Golden Acres WWTF	Marshall	001-2	12/31/2016	Chlorine, total residual	50060-1-0	Effluent Gross											0	mg/L	mg/L	N
KY0044164	Golden Acres WWTF	Marshall	001-2	09/30/2016	Chlorine, total residual	50060-1-0	Effluent Gross									0	mg/L			mg/L	N
KY0044164	Golden Acres WWTF	Marshall	001-2	09/30/2016	Chlorine, total residual	50060-1-0	Effluent Gross											0	mg/L	mg/L	N
KY0044164	Golden Acres WWTF	Marshall	001-2	06/30/2016	Chlorine, total residual	50060-1-0	Effluent Gross									0	mg/L			mg/L	N
KY0044164	Golden Acres WWTF	Marshall	001-2	06/30/2016	Chlorine, total residual	50060-1-0	Effluent Gross											0	mg/L	mg/L	N
KY0044164	Golden Acres WWTF	Marshall	001-2	03/31/2016	Chlorine, total residual	50060-1-0	Effluent Gross									0	mg/L			mg/L	N
KY0044164	Golden Acres WWTF	Marshall	001-2	03/31/2016	Chlorine, total residual	50060-1-0	Effluent Gross											0	mg/L	mg/L	N
KY0044164	Golden Acres WWTF	Marshall	001-2	12/31/2015	Chlorine, total residual	50060-1-0	Effluent Gross									0	mg/L			mg/L	N
KY0044164	Golden Acres WWTF	Marshall	001-2	12/31/2015	Chlorine, total residual	50060-1-0	Effluent Gross											0	mg/L	mg/L	N
KY0044164	Golden Acres WWTF	Marshall	001-2	09/30/2015	Chlorine, total residual	50060-1-0	Effluent Gross									0	mg/L			mg/L	N
KY0044164	Golden Acres WWTF	Marshall	001-2	09/30/2015	Chlorine, total residual	50060-1-0	Effluent Gross											0	mg/L	mg/L	N

KY0044164	Golden Acres WWTF	Marshall	001-2	06/30/2015	Chlorine, total residual	50060-1-0	Effluent Gross									0	mg/L			mg/L	N
KY0044164	Golden Acres WWTF	Marshall	001-2	06/30/2015	Chlorine, total residual	50060-1-0	Effluent Gross											0	mg/L	mg/L	N
KY0044164	Golden Acres WWTF	Marshall	001-2	03/31/2015	Chlorine, total residual	50060-1-0	Effluent Gross									0	mg/L			mg/L	N
KY0044164	Golden Acres WWTF	Marshall	001-2	03/31/2015	Chlorine, total residual	50060-1-0	Effluent Gross											0	mg/L	mg/L	N
															average	0.021764706		0.021764706			
KY0044164	Golden Acres WWTF	Marshall	001-2	12/31/2019	E. coli	51040-1-0	Effluent Gross	46054								60000	#/100mL			#/100mL	Y
KY0044164	Golden Acres WWTF	Marshall	001-2	12/31/2019	E. coli	51040-1-0	Effluent Gross	24900										60000	#/100mL	#/100mL	Y
KY0044164	Golden Acres WWTF	Marshall	001-2	09/30/2019	E. coli	51040-1-0	Effluent Gross													#/100mL	N
KY0044164	Golden Acres WWTF	Marshall	001-2	06/30/2019	E. coli	51040-1-0	Effluent Gross													#/100mL	N
KY0044164	Golden Acres WWTF	Marshall	001-2	03/31/2019	E. coli	51040-1-0	Effluent Gross													#/100mL	N
KY0044164	Golden Acres WWTF	Marshall	001-2	12/31/2018	E. coli	51040-1-0	Effluent Gross	1762								2420	#/100mL			#/100mL	Y
KY0044164	Golden Acres WWTF	Marshall	001-2	12/31/2018	E. coli	51040-1-0	Effluent Gross	908										2420	#/100mL	#/100mL	Y
KY0044164	Golden Acres WWTF	Marshall	001-2	09/30/2018	E. coli	51040-1-0	Effluent Gross	1762								2420	#/100mL			#/100mL	Y
KY0044164	Golden Acres WWTF	Marshall	001-2	09/30/2018	E. coli	51040-1-0	Effluent Gross	908										2420	#/100mL	#/100mL	Y
KY0044164	Golden Acres WWTF	Marshall	001-2	06/30/2018	E. coli	51040-1-0	Effluent Gross									1	#/100mL			#/100mL	N
KY0044164	Golden Acres WWTF	Marshall	001-2	06/30/2018	E. coli	51040-1-0	Effluent Gross											1	#/100mL	#/100mL	N
KY0044164	Golden Acres WWTF	Marshall	001-2	03/31/2018	E. coli	51040-1-0	Effluent Gross	1762								2420	#/100mL			#/100mL	Y
KY0044164	Golden Acres WWTF	Marshall	001-2	03/31/2018	E. coli	51040-1-0	Effluent Gross											0.242	#/100mL	#/100mL	N
KY0044164	Golden Acres WWTF	Marshall	001-2	12/31/2017	E. coli	51040-1-0	Effluent Gross									1	#/100mL			#/100mL	N
KY0044164	Golden Acres WWTF	Marshall	001-2	12/31/2017	E. coli	51040-1-0	Effluent Gross											1	#/100mL	#/100mL	N
KY0044164	Golden Acres WWTF	Marshall	001-2	09/30/2017	E. coli	51040-1-0	Effluent Gross									1	#/100mL			#/100mL	N
KY0044164	Golden Acres WWTF	Marshall	001-2	09/30/2017	E. coli	51040-1-0	Effluent Gross											1	#/100mL	#/100mL	N
KY0044164	Golden Acres WWTF	Marshall	001-2	06/30/2017	E. coli	51040-1-0	Effluent Gross									1	#/100mL			#/100mL	N
KY0044164	Golden Acres WWTF	Marshall	001-2	06/30/2017	E. coli	51040-1-0	Effluent Gross											1	#/100mL	#/100mL	N
KY0044164	Golden Acres WWTF	Marshall	001-2	03/31/2017	E. coli	51040-1-0	Effluent Gross									1	#/100mL			#/100mL	N
KY0044164	Golden Acres WWTF	Marshall	001-2	03/31/2017	E. coli	51040-1-0	Effluent Gross											1	#/100mL	#/100mL	N
KY0044164	Golden Acres WWTF	Marshall	001-2	12/31/2016	E. coli	51040-1-0	Effluent Gross									1	#/100mL			#/100mL	N
KY0044164	Golden Acres WWTF	Marshall	001-2	12/31/2016	E. coli	51040-1-0	Effluent Gross											1	#/100mL	#/100mL	N
KY0044164	Golden Acres WWTF	Marshall	001-2	09/30/2016	E. coli	51040-1-0	Effluent Gross									1	#/100mL			#/100mL	N
KY0044164	Golden Acres WWTF	Marshall	001-2	09/30/2016	E. coli	51040-1-0	Effluent Gross											1	#/100mL	#/100mL	N
KY0044164	Golden Acres WWTF	Marshall	001-2	06/30/2016	E. coli	51040-1-0	Effluent Gross									1	#/100mL			#/100mL	N
KY0044164	Golden Acres WWTF	Marshall	001-2	06/30/2016	E. coli	51040-1-0	Effluent Gross											1	#/100mL	#/100mL	N
KY0044164	Golden Acres WWTF	Marshall	001-2	03/31/2016	E. coli	51040-1-0	Effluent Gross									1	#/100mL			#/100mL	N
KY0044164	Golden Acres WWTF	Marshall	001-2	03/31/2016	E. coli	51040-1-0	Effluent Gross											1	#/100mL	#/100mL	N
KY0044164	Golden Acres WWTF	Marshall	001-2	12/31/2015	E. coli	51040-1-0	Effluent Gross									1	#/100mL			#/100mL	N
KY0044164	Golden Acres WWTF	Marshall	001-2	12/31/2015	E. coli	51040-1-0	Effluent Gross											1	#/100mL	#/100mL	N
KY0044164	Golden Acres WWTF	Marshall	001-2	09/30/2015	E. coli	51040-1-0	Effluent Gross									1	#/100mL			#/100mL	N
KY0044164	Golden Acres WWTF	Marshall	001-2	09/30/2015	E. coli	51040-1-0	Effluent Gross											1	#/100mL	#/100mL	N
KY0044164	Golden Acres WWTF	Marshall	001-2	06/30/2015	E. coli	51040-1-0	Effluent Gross									1	#/100mL			#/100mL	N
KY0044164	Golden Acres WWTF	Marshall	001-2	06/30/2015	E. coli	51040-1-0	Effluent Gross											1	#/100mL	#/100mL	N
KY0044164	Golden Acres WWTF	Marshall	001-2	03/31/2015	E. coli	51040-1-0	Effluent Gross									1	#/100mL			#/100mL	N
KY0044164	Golden Acres WWTF	Marshall	001-2	03/31/2015	E. coli	51040-1-0	Effluent Gross											1	#/100mL	#/100mL	N
															average	3957.235294		3814.896588			
KY0044164	Golden Acres WWTF	Marshall	001-2	12/31/2019	BOD, carbonaceous [5 day,	80082-1-0	Effluent Gross		2	lb/d			lb/d								N
KY0044164	Golden Acres WWTF	Marshall	001-2	12/31/2019	BOD, carbonaceous [5 day,	80082-1-0	Effluent Gross				3	lb/d	lb/d								N
KY0044164	Golden Acres WWTF	Marshall	001-2	12/31/2019	BOD, carbonaceous [5 day,	80082-1-0	Effluent Gross	128								57	mg/L			mg/L	Y
KY0044164	Golden Acres WWTF	Marshall	001-2	12/31/2019	BOD, carbonaceous [5 day,	80082-1-0	Effluent Gross	193										110	mg/L	mg/L	Y
KY0044164	Golden Acres WWTF	Marshall	001-2	09/30/2019	BOD, carbonaceous [5 day,	80082-1-0	Effluent Gross						lb/d								N
KY0044164	Golden Acres WWTF	Marshall	001-2	09/30/2019	BOD, carbonaceous [5 day,	80082-1-0	Effluent Gross													mg/L	N
KY0044164	Golden Acres WWTF	Marshall	001-2	06/30/2019	BOD, carbonaceous [5 day,	80082-1-0	Effluent Gross						lb/d								N
KY0044164	Golden Acres WWTF	Marshall	001-2	06/30/2019	BOD, carbonaceous [5 day,	80082-1-0	Effluent Gross													mg/L	N
KY0044164	Golden Acres WWTF	Marshall	001-2	03/31/2019	BOD, carbonaceous [5 day,	80082-1-0	Effluent Gross						lb/d								N
KY0044164	Golden Acres WWTF	Marshall	001-2	03/31/2019	BOD, carbonaceous [5 day,	80082-1-0	Effluent Gross		1.626	lb/d			lb/d								N
KY0044164	Golden Acres WWTF	Marshall	001-2	12/31/2018	BOD, carbonaceous [5 day,	80082-1-0	Effluent Gross				1.626	lb/d	lb/d								N
KY0044164	Golden Acres WWTF	Marshall	001-2	12/31/2018	BOD, carbonaceous [5 day,	80082-1-0	Effluent Gross									13	mg/L			mg/L	N
KY0044164	Golden Acres WWTF	Marshall	001-2	12/31/2018	BOD, carbonaceous [5 day,	80082-1-0	Effluent Gross											13	mg/L	mg/L	N
KY0044164	Golden Acres WWTF	Marshall	001-2	09/30/2018	BOD, carbonaceous [5 day,	80082-1-0	Effluent Gross	44	7.506	lb/d			lb/d								Y
KY0044164	Golden Acres WWTF	Marshall	001-2	09/30/2018	BOD, carbonaceous [5 day,	80082-1-0	Effluent Gross				7.506	lb/d	lb/d								N
KY0044164	Golden Acres WWTF	Marshall	001-2	09/30/2018	BOD, carbonaceous [5 day,	80082-1-0	Effluent Gross	44								36	mg/L			mg/L	Y
KY0044164	Golden Acres WWTF	Marshall	001-2	09/30/2018	BOD, carbonaceous [5 day,	80082-1-0	Effluent Gross											36	mg/L	mg/L	N
KY0044164	Golden Acres WWTF	Marshall	001-2	06/30/2018	BOD, carbonaceous [5 day,	80082-1-0	Effluent Gross		1.617	lb/d			lb/d								N
KY0044164	Golden Acres WWTF	Marshall	001-2	06/30/2018	BOD, carbonaceous [5 day,	80082-1-0	Effluent Gross				1.617	lb/d	lb/d								N
KY0044164	Golden Acres WWTF	Marshall	001-2	06/30/2018	BOD, carbonaceous [5 day,	80082-1-0	Effluent Gross									9.7	mg/L			mg/L	N
KY0044164	Golden Acres WWTF	Marshall	001-2	06/30/2018	BOD, carbonaceous [5 day,	80082-1-0	Effluent Gross											9.7	mg/L	mg/L	N
KY0044164	Golden Acres WWTF	Marshall	001-2	03/31/2018	BOD, carbonaceous [5 day,	80082-1-0	Effluent Gross		0.9632	lb/d			lb/d								N
KY0044164	Golden Acres WWTF	Marshall	001-2	03/31/2018	BOD, carbonaceous [5 day,	80082-1-0	Effluent Gross				0.9632	lb/d	lb/d								N
KY0044164	Golden Acres WWTF	Marshall	001-2	03/31/2018	BOD, carbonaceous [5 day,	80082-1-0	Effluent Gross									7.7	mg/L			mg/L	N
KY0044164	Golden Acres WWTF	Marshall	001-2	03/31/2018	BOD, carbonaceous [5 day,	80082-1-0	Effluent Gross											7.7	mg/L	mg/L	N
KY0044164	Golden Acres WWTF	Marshall	001-2	12/31/2017	BOD, carbonaceous [5 day,	80082-1-0	Effluent Gross		0.688	lb/d			lb/d								N
KY0044164	Golden Acres WWTF	Marshall	001-2	12/31/2017	BOD, carbonaceous [5 day,	80082-1-0	Effluent Gross				0.688	lb/d	lb/d								N
KY0044164	Golden Acres WWTF	Marshall	001-2	12/31/2017	BOD, carbonaceous [5 day,	80082-1-0	Effluent Gross									5.5	mg/L			mg/L	N
KY0044164	Golden Acres WWTF	Marshall	001-2	12/31/2017	BOD, carbonaceous [5 day,	80082-1-0	Effluent Gross											5.5	mg/L	mg/L	N
KY0044164	Golden Acres WWTF	Marshall	001-2	09/30/2017	BOD, carbonaceous [5 day,	80082-1-0	Effluent Gross		0.417	lb/d			lb/d								N
KY0044164	Golden Acres WWTF	Marshall	001-2	09/30/2017	BOD, carbonaceous [5 day,	80082-1-0	Effluent Gross				0.417	lb/d	lb/d								N
KY0044164	Golden Acres WWTF	Marshall	001-2	09/30/2017	BOD, carbonaceous [5 day,	80082-1-0	Effluent Gross									5	mg/L			mg/L	N
KY0044164	Golden Acres WWTF	Marshall	001-2	09/30/2017	BOD, carbonaceous [5 day,	80082-1-0	Effluent Gross											5	mg/L	mg/L	N
KY0044164	Golden Acres WWTF	Marshall	001-2	06/30/2017	BOD, carbonaceous [5 day,	80082-1-0	Effluent Gross		1.125	lb/d			lb/d								N
KY0044164	Golden Acres WWTF	Marshall	001-2	06/30/2017	BOD, carbonaceous [5 day,	80082-1-0	Effluent Gross				1.125	lb/d	lb/d								N
KY0044164	Golden Acres WWTF	Marshall	001-2	06/30/2017	BOD, carbonaceous [5 day,	80082-1-0	Effluent Gross									5	mg/L			mg/L	N
KY0044164	Golden Acres WWTF	Marshall	001-2	06/30/2017	BOD, carbonaceous [5 day,	80082-1-0	Effluent Gross											5	mg/L	mg/L	N
KY0044164	Golden Acres WWTF	Marshall	001-2	03/31/2017	BOD, carbonaceous [5 day,	80082-1-0	Effluent Gross		1.125	lb/d			lb/d								N
KY0044164	Golden Acres WWTF	Marshall	001-2	03/31/2017	BOD, carbonaceous [5 day,	80082-1-0	Effluent Gross				1.125	lb/d	lb/d								N
KY0044164	Golden Acres WWTF	Marshall	001-2	03/31/2017	BOD, carbonaceous [5 day,	80082-1-0	Effluent Gross									5	mg/L			mg/L	N
KY0044164	Golden Acres WWTF	Marshall	001-2	03/31/2017	BOD, carbonaceous [5 day,	80082-1-0	Effluent Gross											5	mg/L	mg/L	N
KY0044164	Golden Acres WWTF	Marshall	001-2	12/31/2016	BOD, carbonaceous [5 day,	80082-1-0	Effluent Gross		0.8757	lb/d			lb/d								N
KY0044164	Golden Acres WWTF	Marshall	001-2	12/31/2016	BOD, carbonaceous [5 day,	80082-1-0	Effluent Gross				0.8757	lb/d	lb/d								N
KY0044164	Golden Acres WWTF	Marshall	001-2	12/31/2016	BOD, carbonaceous [5 day,	80082-1-0	Effluent Gross									5	mg/L			mg/L	N
KY0044164	Golden Acres WWTF	Marshall	001-2	12/31/2016	BOD, carbonaceous [5 day,	80082-1-0	Effluent Gross											5	mg/L	mg/L	N
KY0044164	Golden Acres WWTF	Marshall	001-2	09/30/2016	BOD, carbonaceous [5 day,	80082-1-0	Effluent Gross		0.6255	lb/d			lb/d								N
KY0044164	Golden Acres WWTF	Marshall	001-2	09/30/2016	BOD, carbonaceous [5 day,	80082-1-0	Effluent Gross				0.6255	lb/d	lb/d								N
KY0044164	Golden Acres WWTF	Marshall	001-2	09/30/2016	BOD, carbonaceous [5 day,	80082-1-0	Effluent Gross									5	mg/L			mg/L	N
KY0044164	Golden Acres WWTF	Marshall	001-2	09/30/2016	BOD, carbonaceous [5 day,	80082-1-0	Effluent Gross											5	mg/L	mg/L	N
KY0044164	Golden Acres WWTF	Marshall	001-2	06/30/2016	BOD, carbonaceous [5 day,	80082-1-0	Effluent Gross		0.9007	lb/d			lb/d								N
KY0044164	Golden Acres WWTF	Marshall	001-2	06/30/2016	BOD, carbonaceous [5 day,	80082-1-0	Effluent Gross				0.9007	lb/d	lb/d								N
KY0044164	Golden Acres WWTF	Marshall	001-2	06/30/2016	BOD, carbonaceous [5 day,	80082-1-0	Effluent Gross									12	mg/L			mg/L	N
KY0044164	Golden Acres WWTF	Marshall	001-2	06/30/2016	BOD, carbonaceous [5 day,	80082-1-0	Effluent Gross											12	mg/L	mg/L	N
KY0044164	Golden Acres WWTF	Marshall	001-2	03/31/2016	BOD, carbonaceous [5 day,	80082-1-0	Effluent Gross		1.251	lb/d			lb/d								N
KY0044164	Golden Acres WWTF	Marshall	001-2	03/31/2016	BOD, carbonaceous [5 day,	80082-1-0	Effluent Gross				1.251	lb/d	lb/d								N
KY0044164	Golden Acres WWTF	Marshall	001-2	03/31/2016	BOD, carbonaceous [5 day,	80082-1-0	Effluent Gross									5	mg/L			mg/L	N
KY0044164	Golden Acres WWTF	Marshall	001-2	03/31/2016	BOD, carbonaceous [5 day,	80082-1-0	Effluent Gross											5	mg/L	mg/L	N
KY0044164	Golden Acres WWTF	Marshall	001-2	12/31/2015	BOD, carbonaceous [5 day,	80082-1-0	Effluent Gross		2.293	lb/d			lb/d								N
KY0044164	Golden Acres WWTF	Marshall	001-2	12/31/2015	BOD, carbonaceous [5 day,	80082-1-0	Effluent Gross				2.293	lb/d	lb/d								N
KY0044164	Golden Acres WWTF	Marshall	001-2	12/31/2015	BOD, carbonaceous [5 day,	80082-1-0	Effluent Gross									11	mg/L			mg/L	N
KY0044164	Golden Acres WWTF	Marshall	001-2	12/31/2015	BOD, carbonaceous [5 day,	80082-1-0	Effluent Gross											11	mg/L	mg/L	N
KY0044164	Golden Acres WWTF	Marshall	001-2	09/30/2015	BOD, carbonaceous [5 day,	80082-1-0	Effluent Gross		0.7506	lb/d			lb/d								N
KY0044164	Golden Acres WWTF	Marshall	001-2	09/30/2015	BOD, carbonaceous [5 day,	80082-1-0	Effluent Gross				0.7506	lb/d	lb/d								N
KY0044164	Golden Acres WWTF	Marshall	001-2	09/30/2015	BOD, carbonaceous [5 day,	80082-1-0	Effluent Gross									5	mg/L			mg/L	N
KY0044164	Golden Acres WWTF	Marshall	001-2	09/30/2015	BOD, carbonaceous [5 day,	80082-1-0	Effluent Gross											5	mg/L	mg/L	N

KY0044164	Golden Acres WWTF	Marshall	001-2	06/30/2015	BOD, carbonaceous [5 day,	80082-1-0	Effluent Gross		1.042	lb/d			lb/d						N
KY0044164	Golden Acres WWTF	Marshall	001-2	06/30/2015	BOD, carbonaceous [5 day,	80082-1-0	Effluent Gross				1.042	lb/d	lb/d						N
KY0044164	Golden Acres WWTF	Marshall	001-2	06/30/2015	BOD, carbonaceous [5 day,	80082-1-0	Effluent Gross									5	mg/L		mg/L	N
KY0044164	Golden Acres WWTF	Marshall	001-2	06/30/2015	BOD, carbonaceous [5 day,	80082-1-0	Effluent Gross											5	mg/L	mg/L	N
KY0044164	Golden Acres WWTF	Marshall	001-2	03/31/2015	BOD, carbonaceous [5 day,	80082-1-0	Effluent Gross		1.034	lb/d			lb/d								N
KY0044164	Golden Acres WWTF	Marshall	001-2	03/31/2015	BOD, carbonaceous [5 day,	80082-1-0	Effluent Gross				1.034	lb/d	lb/d								N
KY0044164	Golden Acres WWTF	Marshall	001-2	03/31/2015	BOD, carbonaceous [5 day,	80082-1-0	Effluent Gross									7.3	mg/L			mg/L	N
KY0044164	Golden Acres WWTF	Marshall	001-2	03/31/2015	BOD, carbonaceous [5 day,	80082-1-0	Effluent Gross											7.3	mg/L	mg/L	N
								average	1.51998235		1.5788059					11.71764706		14.83529412			

Non-Receipt Vio. Exists	DMR Received Date
N	1/17/2020
Y	
Y	
Y	
N	2/27/2019
N	11/5/2018
N	7/13/2018
N	5/28/2018
N	1/11/2018
N	10/28/2017
N	7/26/2017
N	4/28/2017
N	1/16/2017
N	10/29/2016
N	7/26/2016
N	4/28/2016
N	1/28/2016
N	10/28/2015
N	7/27/2015
N	4/12/2015	
N	1/17/2020
N	1/17/2020
Y	
Y	
Y	
N	2/27/2019
N	2/27/2019
N	11/5/2018
N	11/5/2018
N	7/13/2018
N	7/13/2018
N	5/28/2018
N	5/28/2018
N	1/11/2018
N	1/11/2018
N	10/28/2017
N	10/28/2017
N	7/26/2017
N	7/26/2017
N	4/28/2017
N	4/28/2017
N	1/16/2017
N	1/16/2017
N	10/29/2016
N	10/29/2016
N	7/26/2016
N	7/26/2016
N	4/28/2016
N	4/28/2016
N	1/28/2016
N	1/28/2016
N	4/28/2016
N	4/28/2016
N	1/28/2016
N	1/28/2016
N	10/28/2015
N	10/28/2015
N	7/27/2015
N	7/27/2015
N	4/12/2015
N	4/12/2015	
N	1/17/2020
N	1/17/2020
N	1/17/2020
N	1/17/2020
Y	
Y	
Y	
Y	
Y	
Y	
N	2/27/2019
N	2/27/2019
N	2/27/2019
N	2/27/2019
N	11/5/2018
N	11/5/2018
N	11/5/2018
N	11/5/2018
N	7/13/2018
N	7/13/2018
N	7/13/2018
N	7/13/2018
N	5/28/2018
N	5/28/2018
N	5/28/2018
N	5/28/2018
N	1/11/2018
N	1/11/2018
N	1/11/2018
N	1/11/2018
N	10/28/2017
N	10/28/2017
N	10/28/2017
N	10/28/2017
N	7/26/2017
N	7/26/2017
N	7/26/2017
N	7/26/2017
N	4/28/2017
N	4/28/2017
N	4/28/2017
N	4/28/2017
N	1/16/2017
N	1/16/2017
N	1/16/2017

N	1/16/2017
N	10/29/2016
N	10/29/2016
N	10/29/2016
N	10/29/2016
N	7/26/2016
N	7/26/2016
N	7/26/2016
N	7/26/2016
N	4/28/2016
N	4/28/2016
N	4/28/2016
N	4/28/2016
N	1/28/2016
N	1/28/2016
N	1/28/2016
N	1/28/2016
N	10/28/2015
N	10/28/2015
N	10/28/2015
N	10/28/2015
N	7/27/2015
N	7/27/2015
N	7/27/2015
N	7/27/2015
N	4/12/2015
N	4/12/2015
N	4/12/2015
N	4/12/2015
N	1/17/2020
N	1/17/2020
Y	
Y	
Y	
Y	
Y	
Y	
N	2/27/2019
N	2/27/2019
N	11/5/2018
N	11/5/2018
N	11/5/2018
N	11/5/2018
N	7/13/2018
N	7/13/2018
N	7/13/2018
N	7/13/2018
N	5/28/2018
N	5/28/2018
N	1/11/2018
N	1/11/2018
N	10/28/2017
N	10/28/2017
N	10/28/2017
N	10/28/2017
N	7/26/2017
N	7/26/2017
N	7/26/2017
N	7/26/2017
N	4/28/2017
N	4/28/2017
N	1/16/2017
N	1/16/2017
N	10/29/2016
N	10/29/2016
N	10/29/2016
N	10/29/2016
N	7/26/2016
N	7/26/2016
N	7/26/2016
N	7/26/2016
N	4/28/2016
N	4/28/2016
N	1/28/2016
N	1/28/2016
N	10/28/2015
N	10/28/2015
N	10/28/2015
N	10/28/2015
N	7/27/2015
N	7/27/2015
N	7/27/2015
N	7/27/2015
N	4/12/2015
N	4/12/2015
N	1/17/2020
N	1/17/2020
N	1/17/2020
N	1/17/2020
Y	
Y	
Y	
Y	
Y	
Y	
N	2/27/2019
N	2/27/2019
N	2/27/2019
N	2/27/2019
N	11/5/2018
N	11/5/2018
N	7/13/2018
N	7/13/2018
N	5/28/2018
N	5/28/2018
N	5/28/2018
N	5/28/2018

N	1/11/2018
N	1/11/2018
N	1/11/2018
N	1/11/2018
N	10/28/2017
N	10/28/2017
N	7/26/2017
N	7/26/2017
N	4/28/2017
N	4/28/2017
N	4/28/2017
N	4/28/2017
N	1/16/2017
N	1/16/2017
N	1/16/2017
N	1/16/2017
N	10/29/2016
N	10/29/2016
N	7/26/2016
N	7/26/2016
N	4/28/2016
N	4/28/2016
N	4/28/2016
N	4/28/2016
N	1/28/2016
N	1/28/2016
N	1/28/2016
N	1/28/2016
N	10/28/2015
N	10/28/2015
N	10/28/2015
N	10/28/2015
N	7/27/2015
N	7/27/2015
N	4/12/2015
N	4/12/2015
N	4/12/2015
N	1/17/2020
N	1/17/2020
Y	
Y	
Y	
N	2/27/2019
N	2/27/2019
N	11/5/2018
N	11/5/2018
N	7/13/2018
N	7/13/2018
N	5/28/2018
N	5/28/2018
N	1/11/2018
N	1/11/2018
N	10/28/2017
N	10/28/2017
N	7/26/2017
N	7/26/2017
N	4/28/2017
N	4/28/2017
N	1/16/2017
N	1/16/2017
N	10/29/2016
N	10/29/2016
N	7/26/2016
N	7/26/2016
N	4/28/2016
N	4/28/2016
N	1/28/2016
N	1/28/2016
N	10/28/2015
N	10/28/2015
N	10/28/2015
N	10/28/2015
N	7/27/2015
N	7/27/2015
N	4/12/2015
N	4/12/2015
N	1/17/2020
N	1/17/2020
Y	
Y	
Y	
N	2/27/2019
N	2/27/2019
N	11/5/2018
N	11/5/2018
N	7/13/2018
N	7/13/2018
N	5/28/2018
N	5/28/2018
N	1/11/2018
N	1/11/2018
N	10/28/2017
N	10/28/2017
N	7/26/2017
N	7/26/2017
N	4/28/2017
N	4/28/2017
N	1/16/2017
N	1/16/2017
N	10/29/2016
N	10/29/2016
N	7/26/2016
N	7/26/2016
N	4/28/2016
N	4/28/2016
N	1/28/2016
N	1/28/2016
N	10/28/2015
N	10/28/2015

N	7/27/2015
N	7/27/2015
N	4/12/2015
N	4/12/2015
N	1/17/2020
N	1/17/2020
Y	
Y	
Y	
N	2/27/2019
N	2/27/2019
N	11/5/2018
N	11/5/2018
N	7/13/2018
N	7/13/2018
N	5/28/2018
N	5/28/2018
N	1/11/2018
N	1/11/2018
N	10/28/2017
N	10/28/2017
N	7/26/2017
N	7/26/2017
N	4/28/2017
N	4/28/2017
N	1/16/2017
N	1/16/2017
N	10/29/2016
N	10/29/2016
N	7/26/2016
N	7/26/2016
N	4/28/2016
N	4/28/2016
N	1/28/2016
N	1/28/2016
N	10/28/2015
N	10/28/2015
N	7/27/2015
N	7/27/2015
N	4/12/2015
N	4/12/2015
N	1/17/2020
N	1/17/2020
N	1/17/2020
N	1/17/2020
Y	
Y	
Y	
Y	
Y	
Y	
N	2/27/2019
N	2/27/2019
N	2/27/2019
N	2/27/2019
N	11/5/2018
N	11/5/2018
N	11/5/2018
N	11/5/2018
N	7/13/2018
N	7/13/2018
N	7/13/2018
N	7/13/2018
N	5/28/2018
N	5/28/2018
N	5/28/2018
N	5/28/2018
N	1/11/2018
N	1/11/2018
N	1/11/2018
N	1/11/2018
N	10/28/2017
N	10/28/2017
N	10/28/2017
N	10/28/2017
N	7/26/2017
N	7/26/2017
N	7/26/2017
N	7/26/2017
N	4/28/2017
N	4/28/2017
N	4/28/2017
N	4/28/2017
N	1/16/2017
N	1/16/2017
N	1/16/2017
N	1/16/2017
N	10/29/2016
N	10/29/2016
N	10/29/2016
N	10/29/2016
N	7/26/2016
N	7/26/2016
N	7/26/2016
N	7/26/2016
N	4/28/2016
N	4/28/2016
N	4/28/2016
N	4/28/2016
N	1/28/2016
N	1/28/2016
N	1/28/2016
N	1/28/2016
N	10/28/2015
N	10/28/2015
N	10/28/2015
N	10/28/2015

N	7/27/2015
N	7/27/2015
N	7/27/2015
N	7/27/2015
N	4/12/2015
N	4/12/2015
N	4/12/2015
N	4/12/2015

NPDES ID	Permit Name	Latitude in DMS	Longitude in DMS	Latitude in Decima	Longitude in Decim
KY0044164	Golden Acres WWT	+ 36 58' 22" 0	- 88 28' 51" 0	36.972778	-88.480833
KY0044164	Golden Acres WWT	+ 36 58' 22" 0	- 88 28' 51" 0	36.972778	-88.480833
KY0044164	Golden Acres WWT	+ 36 58' 22" 0	- 88 28' 51" 0	36.972778	-88.480833
KY0044164	Golden Acres WWT	+ 36 58' 22" 0	- 88 28' 51" 0	36.972778	-88.480833
KY0044164	Golden Acres WWT	+ 36 58' 22" 0	- 88 28' 51" 0	36.972778	-88.480833
KY0044164	Golden Acres WWT	+ 36 58' 22" 0	- 88 28' 51" 0	36.972778	-88.480833
KY0044164	Golden Acres WWT	+ 36 58' 22" 0	- 88 28' 51" 0	36.972778	-88.480833
KY0044164	Golden Acres WWT	+ 36 58' 22" 0	- 88 28' 51" 0	36.972778	-88.480833
KY0044164	Golden Acres WWT	+ 36 58' 22" 0	- 88 28' 51" 0	36.972778	-88.480833
KY0044164	Golden Acres WWT	+ 36 58' 22" 0	- 88 28' 51" 0	36.972778	-88.480833
KY0044164	Golden Acres WWT	+ 36 58' 22" 0	- 88 28' 51" 0	36.972778	-88.480833
KY0044164	Golden Acres WWT	+ 36 58' 22" 0	- 88 28' 51" 0	36.972778	-88.480833
KY0044164	Golden Acres WWT	+ 36 58' 22" 0	- 88 28' 51" 0	36.972778	-88.480833
KY0044164	Golden Acres WWT	+ 36 58' 22" 0	- 88 28' 51" 0	36.972778	-88.480833
KY0044164	Golden Acres WWT	+ 36 58' 22" 0	- 88 28' 51" 0	36.972778	-88.480833
KY0044164	Golden Acres WWT	+ 36 58' 22" 0	- 88 28' 51" 0	36.972778	-88.480833
KY0044164	Golden Acres WWT	+ 36 58' 22" 0	- 88 28' 51" 0	36.972778	-88.480833
KY0044164	Golden Acres WWT	+ 36 58' 22" 0	- 88 28' 51" 0	36.972778	-88.480833
KY0044164	Golden Acres WWT	+ 36 58' 22" 0	- 88 28' 51" 0	36.972778	-88.480833
KY0044164	Golden Acres WWT	+ 36 58' 22" 0	- 88 28' 51" 0	36.972778	-88.480833
KY0044164	Golden Acres WWT	+ 36 58' 22" 0	- 88 28' 51" 0	36.972778	-88.480833
KY0044164	Golden Acres WWT	+ 36 58' 22" 0	- 88 28' 51" 0	36.972778	-88.480833
KY0044164	Golden Acres WWT	+ 36 58' 22" 0	- 88 28' 51" 0	36.972778	-88.480833
KY0044164	Golden Acres WWT	+ 36 58' 22" 0	- 88 28' 51" 0	36.972778	-88.480833
KY0044164	Golden Acres WWT	+ 36 58' 22" 0	- 88 28' 51" 0	36.972778	-88.480833
KY0044164	Golden Acres WWT	+ 36 58' 22" 0	- 88 28' 51" 0	36.972778	-88.480833

County Name	Facility UDF3	App. Design Flow (	mary Permit SIC C	rr. Major Minor Sta	Limit Set Name
Marshall		0.025	6552	Minor	SANITARY WASTE
Marshall		0.025	6552	Minor	SANITARY WASTE
Marshall		0.025	6552	Minor	SANITARY WASTE
Marshall		0.025	6552	Minor	SANITARY WASTE
Marshall		0.025	6552	Minor	SANITARY WASTE
Marshall		0.025	6552	Minor	SANITARY WASTE
Marshall		0.025	6552	Minor	SANITARY WASTE
Marshall		0.025	6552	Minor	SANITARY WASTE
Marshall		0.025	6552	Minor	SANITARY WASTE
Marshall		0.025	6552	Minor	SANITARY WASTE
Marshall		0.025	6552	Minor	SANITARY WASTE
Marshall		0.025	6552	Minor	SANITARY WASTE
Marshall		0.025	6552	Minor	SANITARY WASTE
Marshall		0.025	6552	Minor	SANITARY WASTE
Marshall		0.025	6552	Minor	SANITARY WASTE
Marshall		0.025	6552	Minor	SANITARY WASTE
Marshall		0.025	6552	Minor	SANITARY WASTE
Marshall		0.025	6552	Minor	SANITARY WASTE
Marshall		0.025	6552	Minor	SANITARY WASTE
Marshall		0.025	6552	Minor	SANITARY WASTE
Marshall		0.025	6552	Minor	SANITARY WASTE
Marshall		0.025	6552	Minor	SANITARY WASTE
Marshall		0.025	6552	Minor	SANITARY WASTE
Marshall		0.025	6552	Minor	SANITARY WASTE
Marshall		0.025	6552	Minor	SANITARY WASTE

Number of Report	umber of Submissio	Initial Monitoring	R Initial DMR Due D	Perm Feature ID	Limit Set Designato
3	3	1/1/2015	4/28/2015	001	2
3	3	1/1/2015	4/28/2015	001	2
3	3	1/1/2015	4/28/2015	001	2
3	3	1/1/2015	4/28/2015	001	2
3	3	1/1/2015	4/28/2015	001	2
3	3	1/1/2015	4/28/2015	001	2
3	3	1/1/2015	4/28/2015	001	2
3	3	1/1/2015	4/28/2015	001	2
3	3	1/1/2015	4/28/2015	001	2
3	3	1/1/2015	4/28/2015	001	2
3	3	1/1/2015	4/28/2015	001	2
3	3	1/1/2015	4/28/2015	001	2
3	3	1/1/2015	4/28/2015	001	2
3	3	1/1/2015	4/28/2015	001	2
3	3	1/1/2015	4/28/2015	001	2
3	3	1/1/2015	4/28/2015	001	2
3	3	1/1/2015	4/28/2015	001	2
3	3	1/1/2015	4/28/2015	001	2
3	3	1/1/2015	4/28/2015	001	2
3	3	1/1/2015	4/28/2015	001	2
3	3	1/1/2015	4/28/2015	001	2
3	3	1/1/2015	4/28/2015	001	2
3	3	1/1/2015	4/28/2015	001	2
3	3	1/1/2015	4/28/2015	001	2
3	3	1/1/2015	4/28/2015	001	2
3	3	1/1/2015	4/28/2015	001	2
3	3	1/1/2015	4/28/2015	001	2

nitoring Location De	e/Longitude.Latitud	titude in Deg/Min/S	/Longitude.Longitu	gitude in Deg/Min/S	Limit Start Date
Effluent Gross	36.973611	+ 36 58' 25" 0	-88.480556	- 88 28' 50" 0	2/1/2015
Effluent Gross	36.973611	+ 36 58' 25" 0	-88.480556	- 88 28' 50" 0	2/1/2015
Effluent Gross	36.973611	+ 36 58' 25" 0	-88.480556	- 88 28' 50" 0	2/1/2015
Effluent Gross	36.973611	+ 36 58' 25" 0	-88.480556	- 88 28' 50" 0	2/1/2015
Effluent Gross	36.973611	+ 36 58' 25" 0	-88.480556	- 88 28' 50" 0	2/1/2015
Effluent Gross	36.973611	+ 36 58' 25" 0	-88.480556	- 88 28' 50" 0	2/1/2015
Effluent Gross	36.973611	+ 36 58' 25" 0	-88.480556	- 88 28' 50" 0	2/1/2015
Effluent Gross	36.973611	+ 36 58' 25" 0	-88.480556	- 88 28' 50" 0	2/1/2015
Effluent Gross	36.973611	+ 36 58' 25" 0	-88.480556	- 88 28' 50" 0	2/1/2015
Effluent Gross	36.973611	+ 36 58' 25" 0	-88.480556	- 88 28' 50" 0	2/1/2015
Effluent Gross	36.973611	+ 36 58' 25" 0	-88.480556	- 88 28' 50" 0	2/1/2015
Effluent Gross	36.973611	+ 36 58' 25" 0	-88.480556	- 88 28' 50" 0	2/1/2015
Effluent Gross	36.973611	+ 36 58' 25" 0	-88.480556	- 88 28' 50" 0	2/1/2015
Effluent Gross	36.973611	+ 36 58' 25" 0	-88.480556	- 88 28' 50" 0	2/1/2015
Effluent Gross	36.973611	+ 36 58' 25" 0	-88.480556	- 88 28' 50" 0	2/1/2015
Effluent Gross	36.973611	+ 36 58' 25" 0	-88.480556	- 88 28' 50" 0	2/1/2015
Effluent Gross	36.973611	+ 36 58' 25" 0	-88.480556	- 88 28' 50" 0	2/1/2015
Effluent Gross	36.973611	+ 36 58' 25" 0	-88.480556	- 88 28' 50" 0	2/1/2015
Effluent Gross	36.973611	+ 36 58' 25" 0	-88.480556	- 88 28' 50" 0	2/1/2015
Effluent Gross	36.973611	+ 36 58' 25" 0	-88.480556	- 88 28' 50" 0	2/1/2015
Effluent Gross	36.973611	+ 36 58' 25" 0	-88.480556	- 88 28' 50" 0	2/1/2015
Effluent Gross	36.973611	+ 36 58' 25" 0	-88.480556	- 88 28' 50" 0	2/1/2015
Effluent Gross	36.973611	+ 36 58' 25" 0	-88.480556	- 88 28' 50" 0	2/1/2015
Effluent Gross	36.973611	+ 36 58' 25" 0	-88.480556	- 88 28' 50" 0	2/1/2015
Effluent Gross	36.973611	+ 36 58' 25" 0	-88.480556	- 88 28' 50" 0	2/1/2015
Effluent Gross	36.973611	+ 36 58' 25" 0	-88.480556	- 88 28' 50" 0	2/1/2015

Limit End Date	Parameter Code	Limit Season ID	Parameter Desc	nit Sample Type Co	equency of Analys
1/31/2020	00300	0	Oxygen, dissolved [	GR	01/90
1/31/2020	00400	0	pH	GR	01/90
1/31/2020	00400	0	pH	GR	01/90
1/31/2020	00530	0	Solids, total suspen	24	01/90
1/31/2020	00530	0	Solids, total suspen	24	01/90
1/31/2020	00530	0	Solids, total suspen	24	01/90
1/31/2020	00530	0	Solids, total suspen	24	01/90
1/31/2020	00610	1	Nitrogen, ammonia	24	01/90
1/31/2020	00610	1	Nitrogen, ammonia	24	01/90
1/31/2020	00610	1	Nitrogen, ammonia	24	01/90
1/31/2020	00610	1	Nitrogen, ammonia	24	01/90
1/31/2020	00610	2	Nitrogen, ammonia	24	01/90
1/31/2020	00610	2	Nitrogen, ammonia	24	01/90
1/31/2020	00610	2	Nitrogen, ammonia	24	01/90
1/31/2020	00610	2	Nitrogen, ammonia	24	01/90
1/31/2020	50050	0	Flow, in conduit or tl	IN	01/90
1/31/2020	50050	0	Flow, in conduit or tl	IN	01/90
1/31/2020	50060	0	Chlorine, total residu	GR	01/90
1/31/2020	50060	0	Chlorine, total residu	GR	01/90
1/31/2020	51040	0	E. coli	GR	01/90
1/31/2020	51040	0	E. coli	GR	01/90
1/31/2020	80082	0	BOD, carbonaceous	24	01/90
1/31/2020	80082	0	BOD, carbonaceous	24	01/90
1/31/2020	80082	0	BOD, carbonaceous	24	01/90
1/31/2020	80082	0	BOD, carbonaceous	24	01/90

requency of Analys	Limit Unit Code	Limit Unit Desc	imit Unit Short Des	Limit Value	tatistical Base Cod
Quarterly	19	Milligrams per Liter	mg/L	7.	IB
Quarterly	12	Standard Units	SU	6.	ME
Quarterly	12	Standard Units	SU	9.	MB
Quarterly	19	Milligrams per Liter	mg/L	30.	MK
Quarterly	19	Milligrams per Liter	mg/L	45.	MS
Quarterly	26	Pounds per Day	lb/d	6.26	MK
Quarterly	26	Pounds per Day	lb/d	9.39	MS
Quarterly	19	Milligrams per Liter	mg/L	4.	MK
Quarterly	19	Milligrams per Liter	mg/L	6.	MS
Quarterly	26	Pounds per Day	lb/d	.83	MK
Quarterly	26	Pounds per Day	lb/d	1.25	MS
Quarterly	19	Milligrams per Liter	mg/L	10.	MK
Quarterly	19	Milligrams per Liter	mg/L	15.	MS
Quarterly	26	Pounds per Day	lb/d	2.09	MK
Quarterly	26	Pounds per Day	lb/d	3.13	MS
Quarterly	03	Million Gallons per D	MGD		MK
Quarterly	03	Million Gallons per D	MGD		MS
Quarterly	19	Milligrams per Liter	mg/L	.011	MK
Quarterly	19	Milligrams per Liter	mg/L	.019	MS
Quarterly	13	Number per 100 Mil	#/100mL	130.	3D
Quarterly	13	Number per 100 Mil	#/100mL	240.	7B
Quarterly	19	Milligrams per Liter	mg/L	25.	MK
Quarterly	19	Milligrams per Liter	mg/L	37.5	MS
Quarterly	26	Pounds per Day	lb/d	5.22	MK
Quarterly	26	Pounds per Day	lb/d	7.82	MS

istical Base Short D	istical Base Long D	istical Base Type C	DMR Comment	Modification Effect	Modification Type
INST MIN	Instantaneous Minin	MIN			
MINIMUM	Minimum	MIN			
MAXIMUM	Maximum	MAX			
MO AVG	Monthly Average	AVG			
MX WK AV	Maximum Weekly A	MAX			
MO AVG	Monthly Average	AVG			
MX WK AV	Maximum Weekly A	MAX			
MO AVG	Monthly Average	AVG			
MX WK AV	Maximum Weekly A	MAX			
MO AVG	Monthly Average	AVG			
MX WK AV	Maximum Weekly A	MAX			
MO AVG	Monthly Average	AVG			
MX WK AV	Maximum Weekly A	MAX			
MO AVG	Monthly Average	AVG			
MX WK AV	Maximum Weekly A	MAX			
MO AVG	Monthly Average	AVG			
MX WK AV	Maximum Weekly A	MAX			
MO AVG	Monthly Average	AVG			
MX WK AV	Maximum Weekly A	MAX			
30DA GEO	30 Day Geometric	AVG			
7 DA GEO	7 Day Geometric	AVG			
MO AVG	Monthly Average	AVG			
MX WK AV	Maximum Weekly A	MAX			
MO AVG	Monthly Average	AVG			
MX WK AV	Maximum Weekly A	MAX			

Modification Type	Modification Effect	Modification Type	Modification Type

Environmental Protection Agency
Integrated Compliance Information System

Version 1.0, modified 08/12/2011
Created Date: 05/02/2011
Last Refresh Date: 02/14/2020

Report Selection Criteri

NPDES ID(s): KY0044164
State Code: KY
Region Code(s):
SIC Code(s):
NAICS Code(s):
Major/Minor Indicator:
County(ies):
Permit Type(s):
Permit Status(es):
Monitoring Period Date Range: 02/01/2015 - 02/
Violation Type: All Data
Parameter Code(s):
State Water Body(ies):

NODI Code	Acceptable?
1	N
2	Y
3	Y
4	Y
5	Y
7	Y
8	N
9	Y
A	Y
B	Y
C	Y
D	N
E	N
F	Y
G	N
H	N
I	Y
J	Y
K	Y
L	N
M	N
N	Y
Q	Y
R	Y
S	Y
V	Y
W	Y
X	N

14/2020

NODI Desc
Wrong Flow
Operation Shutdown
Special Report Attached
Discharge to Lagoon/Groundwater
Frozen Conditions
No Influent
Other (See Comments)
Conditional Monitoring - Not Required This Period
General Permit Exemption
Below Detection Limit/No Detection
No Discharge
Lost Sample/Data Not Available
Analysis Not Conducted/No Sample
Insufficient Flow for Sampling
Sampling Equipment Failure
Invalid Test
Land Applied
Recycled - Water-Closed System
Natural Disaster
DMR Received but not Entered
Laboratory Error
Not Constructed
Not Quantifiable
Administratively Resolved
Fire Conditions
Weather Related
Dry Lysimeter/Well
Parameter/Value Not Reported

NPDES ID	State Code	Region Code	Permit Name	Permittee Address	Facility Name	County	Major Minor Indicator	Permit Type	Permit Status	Federal Grant Flag	Primary SIC Code	Primary NAICS Code	State Water Body	Lat/Long.Latitude in Decimal Degrees	Lat/Long.Longitude in Decimal Degrees	Limit Set	Param Cd - MLC - Season ID	Parameter	Mon. Loc. Desc.	Limit Type Code
KY0044164	KY	04	Golden Acres WWTF	500 Northwest Plaza Dr Ste 500 Saint Ann, MO 63074	GOLDEN ACRES WWTF	Marshall	Minor	NPDES Individual Permit	Admin Continued	N	6552	237210	060400060012-CLARKS RIVER / UT	36.972778	-88.480833	001-2	00300-1-0	Oxygen, dissolved [DO]	Effluent Gross	ENF
KY0044164	KY	04	Golden Acres WWTF	500 Northwest Plaza Dr Ste 500 Saint Ann, MO 63074	GOLDEN ACRES WWTF	Marshall	Minor	NPDES Individual Permit	Admin Continued	N	6552	237210	060400060012-CLARKS RIVER / UT	36.972778	-88.480833	001-2	00400-1-0	pH	Effluent Gross	ENF
KY0044164	KY	04	Golden Acres WWTF	500 Northwest Plaza Dr Ste 500 Saint Ann, MO 63074	GOLDEN ACRES WWTF	Marshall	Minor	NPDES Individual Permit	Admin Continued	N	6552	237210	060400060012-CLARKS RIVER / UT	36.972778	-88.480833	001-2	00530-1-0	Solids, total suspended	Effluent Gross	ENF
KY0044164	KY	04	Golden Acres WWTF	500 Northwest Plaza Dr Ste 500 Saint Ann, MO 63074	GOLDEN ACRES WWTF	Marshall	Minor	NPDES Individual Permit	Admin Continued	N	6552	237210	060400060012-CLARKS RIVER / UT	36.972778	-88.480833	001-2	00610-1-1	Nitrogen, ammonia total [as N]	Effluent Gross	ENF
KY0044164	KY	04	Golden Acres WWTF	500 Northwest Plaza Dr Ste 500 Saint Ann, MO 63074	GOLDEN ACRES WWTF	Marshall	Minor	NPDES Individual Permit	Admin Continued	N	6552	237210	060400060012-CLARKS RIVER / UT	36.972778	-88.480833	001-2	00610-1-2	Nitrogen, ammonia total [as N]	Effluent Gross	ENF
KY0044164	KY	04	Golden Acres WWTF	500 Northwest Plaza Dr Ste 500 Saint Ann, MO 63074	GOLDEN ACRES WWTF	Marshall	Minor	NPDES Individual Permit	Admin Continued	N	6552	237210	060400060012-CLARKS RIVER / UT	36.972778	-88.480833	001-2	50050-1-0	Flow, in conduit or thru treatment plant	Effluent Gross	ENF
KY0044164	KY	04	Golden Acres WWTF	500 Northwest Plaza Dr Ste 500 Saint Ann, MO 63074	GOLDEN ACRES WWTF	Marshall	Minor	NPDES Individual Permit	Admin Continued	N	6552	237210	060400060012-CLARKS RIVER / UT	36.972778	-88.480833	001-2	50060-1-0	Chlorine, total residual	Effluent Gross	ENF
KY0044164	KY	04	Golden Acres WWTF	500 Northwest Plaza Dr Ste 500 Saint Ann, MO 63074	GOLDEN ACRES WWTF	Marshall	Minor	NPDES Individual Permit	Admin Continued	N	6552	237210	060400060012-CLARKS RIVER / UT	36.972778	-88.480833	001-2	51040-1-0	E. coli	Effluent Gross	ENF
KY0044164	KY	04	Golden Acres WWTF	500 Northwest Plaza Dr Ste 500 Saint Ann, MO 63074	GOLDEN ACRES WWTF	Marshall	Minor	NPDES Individual Permit	Admin Continued	N	6552	237210	060400060012-CLARKS RIVER / UT	36.972778	-88.480833	001-2	80082-1-0	BOD, carbonaceous [5 day, 20 C]	Effluent Gross	ENF

NPDES ID	Permit Name	County Name	Perm Feature ID-Limit Set	Mon. Period End Date	Parameter Desc	Param Cd - MLC - Season ID	Monitoring Location Desc	Worst % exced.	Quantity 1	Q1 DMR Value Unit Short Desc	Quantity 2	Q2 DMR Value Unit Short Desc	Limit Value - Quantity Units	Concentration 1	C1 DMR Value Unit Short Desc	Concentration 2	C2 DMR Value Unit Short Desc	Concentration 3	C3 DMR Value Unit Short Desc	Limit Value - Concentration Units	Effluent Vio. Exists
KY0044164	Golden Acres WWTF	Marshall	001-2	12/31/2019	Oxygen, dissolved [DO]	00300-1-0	Effluent Gross	74						1.8	mg/L					mg/L	Y
KY0044164	Golden Acres WWTF	Marshall	001-2	09/30/2019	Oxygen, dissolved [DO]	00300-1-0	Effluent Gross													mg/L	N
KY0044164	Golden Acres WWTF	Marshall	001-2	06/30/2019	Oxygen, dissolved [DO]	00300-1-0	Effluent Gross													mg/L	N
KY0044164	Golden Acres WWTF	Marshall	001-2	03/31/2019	Oxygen, dissolved [DO]	00300-1-0	Effluent Gross													mg/L	N
KY0044164	Golden Acres WWTF	Marshall	001-2	12/31/2018	Oxygen, dissolved [DO]	00300-1-0	Effluent Gross							7.08	mg/L					mg/L	N
KY0044164	Golden Acres WWTF	Marshall	001-2	09/30/2018	Oxygen, dissolved [DO]	00300-1-0	Effluent Gross							7.16	mg/L					mg/L	N
KY0044164	Golden Acres WWTF	Marshall	001-2	06/30/2018	Oxygen, dissolved [DO]	00300-1-0	Effluent Gross	70						2.11	mg/L					mg/L	Y
KY0044164	Golden Acres WWTF	Marshall	001-2	03/31/2018	Oxygen, dissolved [DO]	00300-1-0	Effluent Gross							8.18	mg/L					mg/L	N
KY0044164	Golden Acres WWTF	Marshall	001-2	12/31/2017	Oxygen, dissolved [DO]	00300-1-0	Effluent Gross							7.4	mg/L					mg/L	N
KY0044164	Golden Acres WWTF	Marshall	001-2	09/30/2017	Oxygen, dissolved [DO]	00300-1-0	Effluent Gross							7	mg/L					mg/L	N
KY0044164	Golden Acres WWTF	Marshall	001-2	06/30/2017	Oxygen, dissolved [DO]	00300-1-0	Effluent Gross							7.2	mg/L					mg/L	N
KY0044164	Golden Acres WWTF	Marshall	001-2	03/31/2017	Oxygen, dissolved [DO]	00300-1-0	Effluent Gross							7.2	mg/L					mg/L	N
KY0044164	Golden Acres WWTF	Marshall	001-2	12/31/2016	Oxygen, dissolved [DO]	00300-1-0	Effluent Gross							7	mg/L					mg/L	N
KY0044164	Golden Acres WWTF	Marshall	001-2	09/30/2016	Oxygen, dissolved [DO]	00300-1-0	Effluent Gross							7	mg/L					mg/L	N
KY0044164	Golden Acres WWTF	Marshall	001-2	06/30/2016	Oxygen, dissolved [DO]	00300-1-0	Effluent Gross							7.3	mg/L					mg/L	N
KY0044164	Golden Acres WWTF	Marshall	001-2	03/31/2016	Oxygen, dissolved [DO]	00300-1-0	Effluent Gross							7.8	mg/L					mg/L	N
KY0044164	Golden Acres WWTF	Marshall	001-2	12/31/2015	Oxygen, dissolved [DO]	00300-1-0	Effluent Gross							7	mg/L					mg/L	N
KY0044164	Golden Acres WWTF	Marshall	001-2	09/30/2015	Oxygen, dissolved [DO]	00300-1-0	Effluent Gross							7.2	mg/L					mg/L	N
KY0044164	Golden Acres WWTF	Marshall	001-2	06/30/2015	Oxygen, dissolved [DO]	00300-1-0	Effluent Gross							7.4	mg/L					mg/L	N
KY0044164	Golden Acres WWTF	Marshall	001-2	03/31/2015	Oxygen, dissolved [DO]	00300-1-0	Effluent Gross							8.1	mg/L					mg/L	N
KY0044164	Golden Acres WWTF	Marshall	001-2	12/31/2019	pH	00400-1-0	Effluent Gross							6.76	SU					SU	N
KY0044164	Golden Acres WWTF	Marshall	001-2	12/31/2019	pH	00400-1-0	Effluent Gross											6.85	SU	SU	N
KY0044164	Golden Acres WWTF	Marshall	001-2	09/30/2019	pH	00400-1-0	Effluent Gross													SU	N
KY0044164	Golden Acres WWTF	Marshall	001-2	06/30/2019	pH	00400-1-0	Effluent Gross													SU	N
KY0044164	Golden Acres WWTF	Marshall	001-2	03/31/2019	pH	00400-1-0	Effluent Gross													SU	N
KY0044164	Golden Acres WWTF	Marshall	001-2	12/31/2018	pH	00400-1-0	Effluent Gross							6.64	SU					SU	N
KY0044164	Golden Acres WWTF	Marshall	001-2	12/31/2018	pH	00400-1-0	Effluent Gross											6.64	SU	SU	N
KY0044164	Golden Acres WWTF	Marshall	001-2	09/30/2018	pH	00400-1-0	Effluent Gross							7.12	SU					SU	N
KY0044164	Golden Acres WWTF	Marshall	001-2	09/30/2018	pH	00400-1-0	Effluent Gross											7.12	SU	SU	N
KY0044164	Golden Acres WWTF	Marshall	001-2	06/30/2018	pH	00400-1-0	Effluent Gross							8.04	SU					SU	N
KY0044164	Golden Acres WWTF	Marshall	001-2	06/30/2018	pH	00400-1-0	Effluent Gross											8.04	SU	SU	N
KY0044164	Golden Acres WWTF	Marshall	001-2	03/31/2018	pH	00400-1-0	Effluent Gross							7.16	SU					SU	N
KY0044164	Golden Acres WWTF	Marshall	001-2	03/31/2018	pH	00400-1-0	Effluent Gross											7.16	SU	SU	N
KY0044164	Golden Acres WWTF	Marshall	001-2	12/31/2017	pH	00400-1-0	Effluent Gross							6.3	SU					SU	N
KY0044164	Golden Acres WWTF	Marshall	001-2	12/31/2017	pH	00400-1-0	Effluent Gross											6.3	SU	SU	N
KY0044164	Golden Acres WWTF	Marshall	001-2	09/30/2017	pH	00400-1-0	Effluent Gross							6.7	SU					SU	N
KY0044164	Golden Acres WWTF	Marshall	001-2	09/30/2017	pH	00400-1-0	Effluent Gross											6.7	SU	SU	N
KY0044164	Golden Acres WWTF	Marshall	001-2	06/30/2017	pH	00400-1-0	Effluent Gross							7.9	SU					SU	N
KY0044164	Golden Acres WWTF	Marshall	001-2	06/30/2017	pH	00400-1-0	Effluent Gross											7.9	SU	SU	N
KY0044164	Golden Acres WWTF	Marshall	001-2	03/31/2017	pH	00400-1-0	Effluent Gross							7.9	SU					SU	N
KY0044164	Golden Acres WWTF	Marshall	001-2	03/31/2017	pH	00400-1-0	Effluent Gross											7.9	SU	SU	N
KY0044164	Golden Acres WWTF	Marshall	001-2	12/31/2016	pH	00400-1-0	Effluent Gross							7.5	SU					SU	N
KY0044164	Golden Acres WWTF	Marshall	001-2	12/31/2016	pH	00400-1-0	Effluent Gross											7.5	SU	SU	N
KY0044164	Golden Acres WWTF	Marshall	001-2	09/30/2016	pH	00400-1-0	Effluent Gross							8.2	SU					SU	N
KY0044164	Golden Acres WWTF	Marshall	001-2	09/30/2016	pH	00400-1-0	Effluent Gross											8.2	SU	SU	N
KY0044164	Golden Acres WWTF	Marshall	001-2	06/30/2016	pH	00400-1-0	Effluent Gross							7	SU					SU	N
KY0044164	Golden Acres WWTF	Marshall	001-2	06/30/2016	pH	00400-1-0	Effluent Gross											7	SU	SU	N
KY0044164	Golden Acres WWTF	Marshall	001-2	03/31/2016	pH	00400-1-0	Effluent Gross							7.4	SU					SU	N
KY0044164	Golden Acres WWTF	Marshall	001-2	03/31/2016	pH	00400-1-0	Effluent Gross											7.4	SU	SU	N
KY0044164	Golden Acres WWTF	Marshall	001-2	12/31/2015	pH	00400-1-0	Effluent Gross							6.7	SU					SU	N
KY0044164	Golden Acres WWTF	Marshall	001-2	12/31/2015	pH	00400-1-0	Effluent Gross											6.7	SU	SU	N
KY0044164	Golden Acres WWTF	Marshall	001-2	09/30/2015	pH	00400-1-0	Effluent Gross							7	SU					SU	N
KY0044164	Golden Acres WWTF	Marshall	001-2	09/30/2015	pH	00400-1-0	Effluent Gross											7	SU	SU	N
KY0044164	Golden Acres WWTF	Marshall	001-2	06/30/2015	pH	00400-1-0	Effluent Gross							7.1	SU					SU	N
KY0044164	Golden Acres WWTF	Marshall	001-2	03/31/2015	pH	00400-1-0	Effluent Gross							7.6	SU					SU	N
KY0044164	Golden Acres WWTF	Marshall	001-2	03/31/2015	pH	00400-1-0	Effluent Gross											7.6	SU	SU	N
KY0044164	Golden Acres WWTF	Marshall	001-2	12/31/2019	Solids, total suspended	00530-1-0	Effluent Gross		2	lb/d			lb/d								N
KY0044164	Golden Acres WWTF	Marshall	001-2	12/31/2019	Solids, total suspended	00530-1-0	Effluent Gross				2	lb/d	lb/d								N
KY0044164	Golden Acres WWTF	Marshall	001-2	12/31/2019	Solids, total suspended	00530-1-0	Effluent Gross	53								46	mg/L			mg/L	Y
KY0044164	Golden Acres WWTF	Marshall	001-2	12/31/2019	Solids, total suspended	00530-1-0	Effluent Gross	60										72	mg/L	mg/L	Y
KY0044164	Golden Acres WWTF	Marshall	001-2	09/30/2019	Solids, total suspended	00530-1-0	Effluent Gross						lb/d								N
KY0044164	Golden Acres WWTF	Marshall	001-2	09/30/2019	Solids, total suspended	00530-1-0	Effluent Gross													mg/L	N
KY0044164	Golden Acres WWTF	Marshall	001-2	06/30/2019	Solids, total suspended	00530-1-0	Effluent Gross						lb/d								N
KY0044164	Golden Acres WWTF	Marshall	001-2	06/30/2019	Solids, total suspended	00530-1-0	Effluent Gross													mg/L	N
KY0044164	Golden Acres WWTF	Marshall	001-2	03/31/2019	Solids, total suspended	00530-1-0	Effluent Gross						lb/d								N
KY0044164	Golden Acres WWTF	Marshall	001-2	03/31/2019	Solids, total suspended	00530-1-0	Effluent Gross													mg/L	N
KY0044164	Golden Acres WWTF	Marshall	001-2	12/31/2018	Solids, total suspended	00530-1-0	Effluent Gross		1	lb/d			lb/d								N
KY0044164	Golden Acres WWTF	Marshall	001-2	12/31/2018	Solids, total suspended	00530-1-0	Effluent Gross				1	lb/d	lb/d								N
KY0044164	Golden Acres WWTF	Marshall	001-2	12/31/2018	Solids, total suspended	00530-1-0	Effluent Gross									8	mg/L			mg/L	N
KY0044164	Golden Acres WWTF	Marshall	001-2	12/31/2018	Solids, total suspended	00530-1-0	Effluent Gross											8	mg/L	mg/L	N
KY0044164	Golden Acres WWTF	Marshall	001-2	09/30/2018	Solids, total suspended	00530-1-0	Effluent Gross	30	8.131	lb/d			lb/d								Y
KY0044164	Golden Acres WWTF	Marshall	001-2	09/30/2018	Solids, total suspended	00530-1-0	Effluent Gross				8.131	lb/d	lb/d								N
KY0044164	Golden Acres WWTF	Marshall	001-2	09/30/2018	Solids, total suspended	00530-1-0	Effluent Gross	30								39	mg/L			mg/L	Y
KY0044164	Golden Acres WWTF	Marshall	001-2	09/30/2018	Solids, total suspended	00530-1-0	Effluent Gross											39	mg/L	mg/L	N
KY0044164	Golden Acres WWTF	Marshall	001-2	06/30/2018	Solids, total suspended	00530-1-0	Effluent Gross		.834	lb/d			lb/d								N
KY0044164	Golden Acres WWTF	Marshall	001-2	06/30/2018	Solids, total suspended	00530-1-0	Effluent Gross				.834	lb/d	lb/d								N
KY0044164	Golden Acres WWTF	Marshall	001-2	06/30/2018	Solids, total suspended	00530-1-0	Effluent Gross									5	mg/L			mg/L	N
KY0044164	Golden Acres WWTF	Marshall	001-2	06/30/2018	Solids, total suspended	00530-1-0	Effluent Gross											5	mg/L	mg/L	N
KY0044164	Golden Acres WWTF	Marshall	001-2	03/31/2018	Solids, total suspended	00530-1-0	Effluent Gross		.6255	lb/d			lb/d								N
KY0044164	Golden Acres WWTF	Marshall	001-2	03/31/2018	Solids, total suspended	00530-1-0	Effluent Gross				.6255	lb/d	lb/d								N
KY0044164	Golden Acres WWTF	Marshall	001-2	03/31/2018	Solids, total suspended	00530-1-0	Effluent Gross									5	mg/L			mg/L	N
KY0044164	Golden Acres WWTF	Marshall	001-2	03/31/2018	Solids, total suspended	00530-1-0	Effluent Gross											5	mg/L	mg/L	N
KY0044164	Golden Acres WWTF	Marshall	001-2	12/31/2017	Solids, total suspended	00530-1-0	Effluent Gross		1.125	lb/d			lb/d								N
KY0044164	Golden Acres WWTF	Marshall	001-2	12/31/2017	Solids, total suspended	00530-1-0	Effluent Gross				1.125	lb/d	lb/d								N
KY0044164	Golden Acres WWTF	Marshall	001-2	12/31/2017	Solids, total suspended	00530-1-0	Effluent Gross									9	mg/L			mg/L	N
KY0044164	Golden Acres WWTF	Marshall	001-2	12/31/2017	Solids, total suspended	00530-1-0	Effluent Gross											9	mg/L	mg/L	N
KY0044164	Golden Acres WWTF	Marshall	001-2	09/30/2017	Solids, total suspended	00530-1-0	Effluent Gross		.417	lb/d			lb/d								N
KY0044164	Golden Acres WWTF	Marshall	001-2	09/30/2017	Solids, total suspended	00530-1-0	Effluent Gross				.417	lb/d	lb/d								N
KY0044164	Golden Acres WWTF	Marshall	001-2	09/30/2017	Solids, total suspended	00530-1-0	Effluent Gross									5	mg/L			mg/L	N
KY0044164	Golden Acres WWTF	Marshall	001-2	09/30/2017	Solids, total suspended	00530-1-0	Effluent Gross											5	mg/L	mg/L	N
KY0044164	Golden Acres WWTF	Marshall	001-2	06/30/2017	Solids, total suspended	00530-1-0	Effluent Gross		1.125	lb/d			lb/d								N
KY0044164	Golden Acres WWTF	Marshall	001-2	06/30/2017	Solids, total suspended	00530-1-0	Effluent Gross				1.125	lb/d	lb/d								N
KY0044164	Golden Acres WWTF	Marshall	001-2	06/30/2017	Solids, total suspended	00530-1-0	Effluent Gross									5	mg/L			mg/L	N
KY0044164	Golden Acres WWTF	Marshall	001-2	06/30/2017	Solids, total suspended	00530-1-0	Effluent Gross											5	mg/L	mg/L	N
KY0044164	Golden Acres WWTF	Marshall	001-2	03/31/2017	Solids, total suspended	00530-1-0	Effluent Gross		1.125	lb/d			lb/d								N
KY0044164	Golden Acres WWTF	Marshall	001-2	03/31/2017	Solids, total suspended	00530-1-0	Effluent Gross				1.125	lb/d	lb/d								N
KY0044164	Golden Acres WWTF	Marshall	001-2	03/31/2017	Solids, total suspended	00530-1-0	Effluent Gross									5	mg/L			mg/L	N
KY0044164	Golden Acres WWTF	Marshall	001-2	03/31/2017	Solids, total suspended	00530-1-0	Effluent Gross											5	mg/L	mg/L	N
KY0044164	Golden Acres WWTF	Marshall	001-2	12/31/2016	Solids, total suspended	00530-1-0	Effluent Gross		.8757	lb/d			lb/d								N
KY0044164	Golden Acres WWTF	Marshall	001-2	12/31/2016	Solids, total suspended	00530-1-0	Effluent Gross				.8757	lb/d	lb/d								N
KY0044164	Golden Acres WWTF	Marshall	001-2	12/31/2016	Solids, total suspended	00530-1-0	Effluent Gross									5	mg/L			mg/L	N
KY0044164	Golden Acres WWTF	Marshall	001-2	12/31/2016	Solids, total suspended	00530-1-0	Effluent Gross											5	mg/L	mg/L	N
KY0044164	Golden Acres WWTF	Marshall	001-2	09/30/2016	Solids, total suspended	00530-1-0	Effluent Gross		.6255	lb/d			lb/d								N
KY0044164	Golden Acres WWTF	Marshall	001-2	09/30/2016	Solids, total suspended	00530-1-0	Effluent Gross				.6255	lb/d	lb/d								N
KY0044164	Golden Acres WWTF	Marshall	001-2	09/30/2016	Solids, total suspended	00530-1-0	Effluent Gross									5	mg/L			mg/L	N
KY0044164	Golden Acres WWTF	Marshall	001-2	09/30/2016	Solids, total suspended	00530-1-0	Effluent Gross											5	mg/L	mg/L	N
KY0044164	Golden Acres WWTF	Marshall	001-2	06/30/2016	Solids, total suspended	00530-1-0	Effluent Gross		.5254	lb/d			lb/d								N
KY0044164	Golden Acres WWTF	Marshall	001-2	06/30/2016	Solids, total suspended	00530-1-0	Effluent Gross				.5254	lb/d	lb/d								N
KY0044164	Golden Acres WWTF	Marshall	001-2	06/30/2016	Solids, total suspended	00530-1-0	Effluent Gross									7	mg/L			mg/L	N
KY0044164	Golden Acres WWTF	Marshall	001-2	06/30/2016	Solids, total suspended	00530-1-0	Effluent Gross											7	mg/L	mg/L	N

KY0044164	Golden Acres WWTF	Marshall	001-2	03/31/2016	Solids, total suspended	00530-1-0	Effluent Gross		1.251	lb/d			lb/d								N
KY0044164	Golden Acres WWTF	Marshall	001-2	03/31/2016	Solids, total suspended	00530-1-0	Effluent Gross				1.251	lb/d	lb/d								N
KY0044164	Golden Acres WWTF	Marshall	001-2	03/31/2016	Solids, total suspended	00530-1-0	Effluent Gross									5	mg/L			mg/L	N
KY0044164	Golden Acres WWTF	Marshall	001-2	03/31/2016	Solids, total suspended	00530-1-0	Effluent Gross											5	mg/L	mg/L	N
KY0044164	Golden Acres WWTF	Marshall	001-2	12/31/2015	Solids, total suspended	00530-1-0	Effluent Gross		3.336	lb/d			lb/d								N
KY0044164	Golden Acres WWTF	Marshall	001-2	12/31/2015	Solids, total suspended	00530-1-0	Effluent Gross				3.336	lb/d	lb/d								N
KY0044164	Golden Acres WWTF	Marshall	001-2	12/31/2015	Solids, total suspended	00530-1-0	Effluent Gross									16	mg/L			mg/L	N
KY0044164	Golden Acres WWTF	Marshall	001-2	12/31/2015	Solids, total suspended	00530-1-0	Effluent Gross											16	mg/L	mg/L	N
KY0044164	Golden Acres WWTF	Marshall	001-2	09/30/2015	Solids, total suspended	00530-1-0	Effluent Gross		.7506	lb/d			lb/d								N
KY0044164	Golden Acres WWTF	Marshall	001-2	09/30/2015	Solids, total suspended	00530-1-0	Effluent Gross				.7506	lb/d	lb/d								N
KY0044164	Golden Acres WWTF	Marshall	001-2	09/30/2015	Solids, total suspended	00530-1-0	Effluent Gross									5	mg/L			mg/L	N
KY0044164	Golden Acres WWTF	Marshall	001-2	09/30/2015	Solids, total suspended	00530-1-0	Effluent Gross											5	mg/L	mg/L	N
KY0044164	Golden Acres WWTF	Marshall	001-2	06/30/2015	Solids, total suspended	00530-1-0	Effluent Gross		1.042	lb/d			lb/d								N
KY0044164	Golden Acres WWTF	Marshall	001-2	06/30/2015	Solids, total suspended	00530-1-0	Effluent Gross				1.042	lb/d	lb/d								N
KY0044164	Golden Acres WWTF	Marshall	001-2	06/30/2015	Solids, total suspended	00530-1-0	Effluent Gross									5	mg/L			mg/L	N
KY0044164	Golden Acres WWTF	Marshall	001-2	06/30/2015	Solids, total suspended	00530-1-0	Effluent Gross											5	mg/L	mg/L	N
KY0044164	Golden Acres WWTF	Marshall	001-2	03/31/2015	Solids, total suspended	00530-1-0	Effluent Gross		1.276	lb/d			lb/d								N
KY0044164	Golden Acres WWTF	Marshall	001-2	03/31/2015	Solids, total suspended	00530-1-0	Effluent Gross				1.276	lb/d	lb/d								N
KY0044164	Golden Acres WWTF	Marshall	001-2	03/31/2015	Solids, total suspended	00530-1-0	Effluent Gross									9	mg/L			mg/L	N
KY0044164	Golden Acres WWTF	Marshall	001-2	03/31/2015	Solids, total suspended	00530-1-0	Effluent Gross											9	mg/L	mg/L	N
KY0044164	Golden Acres WWTF	Marshall	001-2	12/31/2019	Nitrogen, ammonia total [as	00610-1-1	Effluent Gross		NODI 9		NODI 9		lb/d								N
KY0044164	Golden Acres WWTF	Marshall	001-2	12/31/2019	Nitrogen, ammonia total [as	00610-1-1	Effluent Gross									NODI 9		NODI 9		mg/L	N
KY0044164	Golden Acres WWTF	Marshall	001-2	09/30/2019	Nitrogen, ammonia total [as	00610-1-1	Effluent Gross						lb/d								N
KY0044164	Golden Acres WWTF	Marshall	001-2	09/30/2019	Nitrogen, ammonia total [as	00610-1-1	Effluent Gross													mg/L	N
KY0044164	Golden Acres WWTF	Marshall	001-2	06/30/2019	Nitrogen, ammonia total [as	00610-1-1	Effluent Gross						lb/d								N
KY0044164	Golden Acres WWTF	Marshall	001-2	06/30/2019	Nitrogen, ammonia total [as	00610-1-1	Effluent Gross													mg/L	N
KY0044164	Golden Acres WWTF	Marshall	001-2	03/31/2019	Nitrogen, ammonia total [as	00610-1-1	Effluent Gross						lb/d								N
KY0044164	Golden Acres WWTF	Marshall	001-2	03/31/2019	Nitrogen, ammonia total [as	00610-1-1	Effluent Gross													mg/L	N
KY0044164	Golden Acres WWTF	Marshall	001-2	12/31/2018	Nitrogen, ammonia total [as	00610-1-1	Effluent Gross		NODI 9		NODI 9		lb/d								N
KY0044164	Golden Acres WWTF	Marshall	001-2	12/31/2018	Nitrogen, ammonia total [as	00610-1-1	Effluent Gross									NODI 9		NODI 9		mg/L	N
KY0044164	Golden Acres WWTF	Marshall	001-2	09/30/2018	Nitrogen, ammonia total [as	00610-1-1	Effluent Gross	176	2.293	lb/d			lb/d								Y
KY0044164	Golden Acres WWTF	Marshall	001-2	09/30/2018	Nitrogen, ammonia total [as	00610-1-1	Effluent Gross	83			2.293	lb/d	lb/d								Y
KY0044164	Golden Acres WWTF	Marshall	001-2	09/30/2018	Nitrogen, ammonia total [as	00610-1-1	Effluent Gross	175								11	mg/L			mg/L	Y
KY0044164	Golden Acres WWTF	Marshall	001-2	09/30/2018	Nitrogen, ammonia total [as	00610-1-1	Effluent Gross	83										11	mg/L	mg/L	Y
KY0044164	Golden Acres WWTF	Marshall	001-2	06/30/2018	Nitrogen, ammonia total [as	00610-1-1	Effluent Gross	55	1.284	lb/d			lb/d								Y
KY0044164	Golden Acres WWTF	Marshall	001-2	06/30/2018	Nitrogen, ammonia total [as	00610-1-1	Effluent Gross	3			1.284	lb/d	lb/d								Y
KY0044164	Golden Acres WWTF	Marshall	001-2	06/30/2018	Nitrogen, ammonia total [as	00610-1-1	Effluent Gross	93								7.7	mg/L			mg/L	Y
KY0044164	Golden Acres WWTF	Marshall	001-2	06/30/2018	Nitrogen, ammonia total [as	00610-1-1	Effluent Gross	28										7.7	mg/L	mg/L	Y
KY0044164	Golden Acres WWTF	Marshall	001-2	03/31/2018	Nitrogen, ammonia total [as	00610-1-1	Effluent Gross		NODI 9		NODI 9		lb/d								N
KY0044164	Golden Acres WWTF	Marshall	001-2	03/31/2018	Nitrogen, ammonia total [as	00610-1-1	Effluent Gross									NODI 9		NODI 9		mg/L	N
KY0044164	Golden Acres WWTF	Marshall	001-2	12/31/2017	Nitrogen, ammonia total [as	00610-1-1	Effluent Gross		NODI 9		NODI 9		lb/d								N
KY0044164	Golden Acres WWTF	Marshall	001-2	12/31/2017	Nitrogen, ammonia total [as	00610-1-1	Effluent Gross									NODI 9		NODI 9		mg/L	N
KY0044164	Golden Acres WWTF	Marshall	001-2	09/30/2017	Nitrogen, ammonia total [as	00610-1-1	Effluent Gross		.6421	lb/d			lb/d								N
KY0044164	Golden Acres WWTF	Marshall	001-2	09/30/2017	Nitrogen, ammonia total [as	00610-1-1	Effluent Gross				.6421	lb/d	lb/d								N
KY0044164	Golden Acres WWTF	Marshall	001-2	09/30/2017	Nitrogen, ammonia total [as	00610-1-1	Effluent Gross	93								7.7	mg/L			mg/L	Y
KY0044164	Golden Acres WWTF	Marshall	001-2	09/30/2017	Nitrogen, ammonia total [as	00610-1-1	Effluent Gross	28										7.7	mg/L	mg/L	Y
KY0044164	Golden Acres WWTF	Marshall	001-2	06/30/2017	Nitrogen, ammonia total [as	00610-1-1	Effluent Gross		.0562	lb/d			lb/d								N
KY0044164	Golden Acres WWTF	Marshall	001-2	06/30/2017	Nitrogen, ammonia total [as	00610-1-1	Effluent Gross				.0562	lb/d	lb/d								N
KY0044164	Golden Acres WWTF	Marshall	001-2	06/30/2017	Nitrogen, ammonia total [as	00610-1-1	Effluent Gross									.25	mg/L			mg/L	N
KY0044164	Golden Acres WWTF	Marshall	001-2	06/30/2017	Nitrogen, ammonia total [as	00610-1-1	Effluent Gross											.25	mg/L	mg/L	N
KY0044164	Golden Acres WWTF	Marshall	001-2	03/31/2017	Nitrogen, ammonia total [as	00610-1-1	Effluent Gross		NODI 9		NODI 9		lb/d								N
KY0044164	Golden Acres WWTF	Marshall	001-2	03/31/2017	Nitrogen, ammonia total [as	00610-1-1	Effluent Gross									NODI 9		NODI 9		mg/L	N
KY0044164	Golden Acres WWTF	Marshall	001-2	12/31/2016	Nitrogen, ammonia total [as	00610-1-1	Effluent Gross		NODI 9		NODI 9		lb/d								N
KY0044164	Golden Acres WWTF	Marshall	001-2	12/31/2016	Nitrogen, ammonia total [as	00610-1-1	Effluent Gross									NODI 9		NODI 9		mg/L	N
KY0044164	Golden Acres WWTF	Marshall	001-2	09/30/2016	Nitrogen, ammonia total [as	00610-1-1	Effluent Gross		.0312	lb/d			lb/d								N
KY0044164	Golden Acres WWTF	Marshall	001-2	09/30/2016	Nitrogen, ammonia total [as	00610-1-1	Effluent Gross				.0312	lb/d	lb/d								N
KY0044164	Golden Acres WWTF	Marshall	001-2	09/30/2016	Nitrogen, ammonia total [as	00610-1-1	Effluent Gross									.25	mg/L			mg/L	N
KY0044164	Golden Acres WWTF	Marshall	001-2	09/30/2016	Nitrogen, ammonia total [as	00610-1-1	Effluent Gross											.25	mg/L	mg/L	N
KY0044164	Golden Acres WWTF	Marshall	001-2	06/30/2016	Nitrogen, ammonia total [as	00610-1-1	Effluent Gross	108	1.726	lb/d			lb/d								Y
KY0044164	Golden Acres WWTF	Marshall	001-2	06/30/2016	Nitrogen, ammonia total [as	00610-1-1	Effluent Gross	38			1.726	lb/d	lb/d								Y
KY0044164	Golden Acres WWTF	Marshall	001-2	06/30/2016	Nitrogen, ammonia total [as	00610-1-1	Effluent Gross	475								23	mg/L			mg/L	Y
KY0044164	Golden Acres WWTF	Marshall	001-2	06/30/2016	Nitrogen, ammonia total [as	00610-1-1	Effluent Gross	283										23	mg/L	mg/L	Y
KY0044164	Golden Acres WWTF	Marshall	001-2	03/31/2016	Nitrogen, ammonia total [as	00610-1-1	Effluent Gross		NODI 9		NODI 9		lb/d								N
KY0044164	Golden Acres WWTF	Marshall	001-2	03/31/2016	Nitrogen, ammonia total [as	00610-1-1	Effluent Gross									NODI 9		NODI 9		mg/L	N
KY0044164	Golden Acres WWTF	Marshall	001-2	12/31/2015	Nitrogen, ammonia total [as	00610-1-1	Effluent Gross		NODI 9		NODI 9		lb/d								N
KY0044164	Golden Acres WWTF	Marshall	001-2	12/31/2015	Nitrogen, ammonia total [as	00610-1-1	Effluent Gross									NODI 9		NODI 9		mg/L	N
KY0044164	Golden Acres WWTF	Marshall	001-2	09/30/2015	Nitrogen, ammonia total [as	00610-1-1	Effluent Gross	19	.9907	lb/d			lb/d								Y
KY0044164	Golden Acres WWTF	Marshall	001-2	09/30/2015	Nitrogen, ammonia total [as	00610-1-1	Effluent Gross				.9907	lb/d	lb/d								N
KY0044164	Golden Acres WWTF	Marshall	001-2	09/30/2015	Nitrogen, ammonia total [as	00610-1-1	Effluent Gross	65								6.6	mg/L			mg/L	Y
KY0044164	Golden Acres WWTF	Marshall	001-2	09/30/2015	Nitrogen, ammonia total [as	00610-1-1	Effluent Gross	10										6.6	mg/L	mg/L	Y
KY0044164	Golden Acres WWTF	Marshall	001-2	06/30/2015	Nitrogen, ammonia total [as	00610-1-1	Effluent Gross		.0521	lb/d			lb/d								N
KY0044164	Golden Acres WWTF	Marshall	001-2	06/30/2015	Nitrogen, ammonia total [as	00610-1-1	Effluent Gross				.0521	lb/d	lb/d								N
KY0044164	Golden Acres WWTF	Marshall	001-2	06/30/2015	Nitrogen, ammonia total [as	00610-1-1	Effluent Gross									.25	mg/L			mg/L	N
KY0044164	Golden Acres WWTF	Marshall	001-2	06/30/2015	Nitrogen, ammonia total [as	00610-1-1	Effluent Gross											.25	mg/L	mg/L	N
KY0044164	Golden Acres WWTF	Marshall	001-2	03/31/2015	Nitrogen, ammonia total [as	00610-1-1	Effluent Gross		NODI 9		NODI 9		lb/d								N
KY0044164	Golden Acres WWTF	Marshall	001-2	03/31/2015	Nitrogen, ammonia total [as	00610-1-1	Effluent Gross									NODI 9		NODI 9		mg/L	N
KY0044164	Golden Acres WWTF	Marshall	001-2	12/31/2019	Nitrogen, ammonia total [as	00610-1-2	Effluent Gross		.4541	lb/d			lb/d								N
KY0044164	Golden Acres WWTF	Marshall	001-2	12/31/2019	Nitrogen, ammonia total [as	00610-1-2	Effluent Gross				.4541	lb/d	lb/d								N
KY0044164	Golden Acres WWTF	Marshall	001-2	12/31/2019	Nitrogen, ammonia total [as	00610-1-2	Effluent Gross	82								18.15	mg/L			mg/L	Y
KY0044164	Golden Acres WWTF	Marshall	001-2	12/31/2019	Nitrogen, ammonia total [as	00610-1-2	Effluent Gross	113										32	mg/L	mg/L	Y
KY0044164	Golden Acres WWTF	Marshall	001-2	09/30/2019	Nitrogen, ammonia total [as	00610-1-2	Effluent Gross						lb/d								N
KY0044164	Golden Acres WWTF	Marshall	001-2	09/30/2019	Nitrogen, ammonia total [as	00610-1-2	Effluent Gross													mg/L	N
KY0044164	Golden Acres WWTF	Marshall	001-2	06/30/2019	Nitrogen, ammonia total [as	00610-1-2	Effluent Gross						lb/d								N
KY0044164	Golden Acres WWTF	Marshall	001-2	06/30/2019	Nitrogen, ammonia total [as	00610-1-2	Effluent Gross													mg/L	N
KY0044164	Golden Acres WWTF	Marshall	001-2	03/31/2019	Nitrogen, ammonia total [as	00610-1-2	Effluent Gross						lb/d								N
KY0044164	Golden Acres WWTF	Marshall	001-2	03/31/2019	Nitrogen, ammonia total [as	00610-1-2	Effluent Gross													mg/L	N
KY0044164	Golden Acres WWTF	Marshall	001-2	12/31/2018	Nitrogen, ammonia total [as	00610-1-2	Effluent Gross		.0875	lb/d			lb/d								N
KY0044164	Golden Acres WWTF	Marshall	001-2	12/31/2018	Nitrogen, ammonia total [as	00610-1-2	Effluent Gross				.0875	lb/d	lb/d								N
KY0044164	Golden Acres WWTF	Marshall	001-2	12/31/2018	Nitrogen, ammonia total [as	00610-1-2	Effluent Gross									.7	mg/L			mg/L	N
KY0044164	Golden Acres WWTF	Marshall	001-2	12/31/2018	Nitrogen, ammonia total [as	00610-1-2	Effluent Gross											.7	mg/L	mg/L	N
KY0044164	Golden Acres WWTF	Marshall	001-2	09/30/2018	Nitrogen, ammonia total [as	00610-1-2	Effluent Gross		NODI 9		NODI 9		lb/d								N
KY0044164	Golden Acres WWTF	Marshall	001-2	09/30/2018	Nitrogen, ammonia total [as	00610-1-2	Effluent Gross									NODI 9		NODI 9		mg/L	N
KY0044164	Golden Acres WWTF	Marshall	001-2	06/30/2018	Nitrogen, ammonia total [as	00610-1-2	Effluent Gross		NODI 9		NODI 9		lb/d								N
KY0044164	Golden Acres WWTF	Marshall	001-2	06/30/2018	Nitrogen, ammonia total [as	00610-1-2	Effluent Gross									NODI 9		NODI 9		mg/L	N
KY0044164	Golden Acres WWTF	Marshall	001-2	03/31/2018	Nitrogen, ammonia total [as	00610-1-2	Effluent Gross		.055	lb/d			lb/d								N
KY0044164	Golden Acres WWTF	Marshall	001-2	03/31/2018	Nitrogen, ammonia total [as	00610-1-2	Effluent Gross				.055	lb/d	lb/d								N
KY0044164	Golden Acres WWTF	Marshall	001-2	03/31/2018	Nitrogen, ammonia total [as	00610-1-2	Effluent Gross									5	mg/L			mg/L	N
KY0044164	Golden Acres WWTF	Marshall	001-2	03/31/2018	Nitrogen, ammonia total [as	00610-1-2	Effluent Gross											5	mg/L	mg/L	N
KY0044164	Golden Acres WWTF	Marshall	001-2	12/31/2017	Nitrogen, ammonia total [as	00610-1-2	Effluent Gross		.2752	lb/d			lb/d								N
KY0044164	Golden Acres WWTF	Marshall	001-2	12/31/2017	Nitrogen, ammonia total [as	00610-1-2	Effluent Gross				.2752	lb/d	lb/d								N
KY0044164	Golden Acres WWTF	Marshall	001-2	12/31/2017	Nitrogen, ammonia total [as	00610-1-2	Effluent Gross									2.2	mg/L			mg/L	N
KY0044164	Golden Acres WWTF	Marshall	001-2	12/31/2017	Nitrogen, ammonia total [as	00610-1-2	Effluent Gross											2.2	mg/L	mg/L	N
KY0044164	Golden Acres WWTF	Marshall	001-2	09/30/2017	Nitrogen, ammonia total [as	00610-1-2	Effluent Gross		NODI 9		NODI 9		lb/d								N
KY0044164	Golden Acres WWTF	Marshall	001-2	09/30/2017	Nitrogen, ammonia total [as	00610-1-2	Effluent Gross									NODI 9		NODI 9		mg/L	N
KY0044164	Golden Acres WWTF	Marshall	001-2	06/30/2017	Nitrogen, ammonia total [as	00610-1-2	Effluent Gross		NODI 9		NODI 9		lb/d								N
KY0044164	Golden Acres WWTF	Marshall	001-2	06/30/2017	Nitrogen, ammonia total [as	00610-1-2	Effluent Gross									NODI 9		NODI 9		mg/L	N
KY0044164	Golden Acres WWTF	Marshall	001-2	03/31/2017	Nitrogen, ammonia total [as	00610-1-2	Effluent Gross		.0562	lb/d			lb/d								N
KY0044164	Golden Acres WWTF	Marshall	001-2	03/31/2017	Nitrogen, ammonia total [as	00610-1-2	Effluent Gross				.0562	lb/d	lb/d								N
KY0044164	Golden Acres WWTF	Marshall	001-2	03/31/2017	Nitrogen, ammonia total [as	00610-1-2	Effluent Gross									.25	mg/L			mg/L	N
KY0044164	Golden Acres WWTF	Marshall	001-2	03/31/2017	Nitrogen, ammonia total [as	00610-1-2	Effluent Gross											.25	mg/L	mg/L	N
KY0044164	Golden Acres WWTF	Marshall	001-2	12/31/2016	Nitrogen, ammonia total [as	00610-1-2	Effluent Gross		.0437	lb/d			lb/d								N
KY0044164	Golden Acres WWTF	Marshall	001-2	12/31/2016	Nitrogen, ammonia total [as	00610-1-2	Effluent Gross				.0437	lb/d	lb/d								N
KY0044164	Golden Acres WWTF	Marshall	001-2	12/31/2016	Nitrogen, ammonia total [as	00610-1-2	Effluent Gross									.25	mg/L			mg/L	N
KY0044164	Golden Acres WWTF	Marshall	001-2	12/31/2016	Nitrogen, ammonia total [as	00610-1-2	Effluent Gross											.25	mg/L	mg/L	N

KY0044164	Golden Acres WWTF	Marshall	001-2	09/30/2016	Nitrogen, ammonia total [as	00610-1-2	Effluent Gross		NODI 9		NODI 9		lb/d								N
KY0044164	Golden Acres WWTF	Marshall	001-2	09/30/2016	Nitrogen, ammonia total [as	00610-1-2	Effluent Gross									NODI 9		NODI 9		mg/L	N
KY0044164	Golden Acres WWTF	Marshall	001-2	06/30/2016	Nitrogen, ammonia total [as	00610-1-2	Effluent Gross		NODI 9		NODI 9		lb/d								N
KY0044164	Golden Acres WWTF	Marshall	001-2	06/30/2016	Nitrogen, ammonia total [as	00610-1-2	Effluent Gross									NODI 9		NODI 9		mg/L	N
KY0044164	Golden Acres WWTF	Marshall	001-2	03/31/2016	Nitrogen, ammonia total [as	00610-1-2	Effluent Gross		.08	lb/d			lb/d								N
KY0044164	Golden Acres WWTF	Marshall	001-2	03/31/2016	Nitrogen, ammonia total [as	00610-1-2	Effluent Gross				.08	lb/d	lb/d								N
KY0044164	Golden Acres WWTF	Marshall	001-2	03/31/2016	Nitrogen, ammonia total [as	00610-1-2	Effluent Gross									.32	mg/L			mg/L	N
KY0044164	Golden Acres WWTF	Marshall	001-2	03/31/2016	Nitrogen, ammonia total [as	00610-1-2	Effluent Gross											.32	mg/L	mg/L	N
KY0044164	Golden Acres WWTF	Marshall	001-2	12/31/2015	Nitrogen, ammonia total [as	00610-1-2	Effluent Gross		.0521	lb/d			lb/d								N
KY0044164	Golden Acres WWTF	Marshall	001-2	12/31/2015	Nitrogen, ammonia total [as	00610-1-2	Effluent Gross				.0521	lb/d	lb/d								N
KY0044164	Golden Acres WWTF	Marshall	001-2	12/31/2015	Nitrogen, ammonia total [as	00610-1-2	Effluent Gross									.25	mg/L			mg/L	N
KY0044164	Golden Acres WWTF	Marshall	001-2	12/31/2015	Nitrogen, ammonia total [as	00610-1-2	Effluent Gross											.25	mg/L	mg/L	N
KY0044164	Golden Acres WWTF	Marshall	001-2	09/30/2015	Nitrogen, ammonia total [as	00610-1-2	Effluent Gross		.7506	lb/d			lb/d								N
KY0044164	Golden Acres WWTF	Marshall	001-2	09/30/2015	Nitrogen, ammonia total [as	00610-1-2	Effluent Gross				.7506	lb/d	lb/d								N
KY0044164	Golden Acres WWTF	Marshall	001-2	09/30/2015	Nitrogen, ammonia total [as	00610-1-2	Effluent Gross									5	mg/L			mg/L	N
KY0044164	Golden Acres WWTF	Marshall	001-2	09/30/2015	Nitrogen, ammonia total [as	00610-1-2	Effluent Gross											5	mg/L	mg/L	N
KY0044164	Golden Acres WWTF	Marshall	001-2	06/30/2015	Nitrogen, ammonia total [as	00610-1-2	Effluent Gross		NODI 9		NODI 9		lb/d								N
KY0044164	Golden Acres WWTF	Marshall	001-2	06/30/2015	Nitrogen, ammonia total [as	00610-1-2	Effluent Gross									NODI 9		NODI 9		mg/L	N
KY0044164	Golden Acres WWTF	Marshall	001-2	03/31/2015	Nitrogen, ammonia total [as	00610-1-2	Effluent Gross	9	2.268	lb/d			lb/d								Y
KY0044164	Golden Acres WWTF	Marshall	001-2	03/31/2015	Nitrogen, ammonia total [as	00610-1-2	Effluent Gross				2.268	lb/d	lb/d								N
KY0044164	Golden Acres WWTF	Marshall	001-2	03/31/2015	Nitrogen, ammonia total [as	00610-1-2	Effluent Gross	60								16	mg/L			mg/L	Y
KY0044164	Golden Acres WWTF	Marshall	001-2	03/31/2015	Nitrogen, ammonia total [as	00610-1-2	Effluent Gross	7										16	mg/L	mg/L	Y
KY0044164	Golden Acres WWTF	Marshall	001-2	12/31/2019	Flow, in conduit or thru	50050-1-0	Effluent Gross		.003	MGD			MGD								N
KY0044164	Golden Acres WWTF	Marshall	001-2	12/31/2019	Flow, in conduit or thru	50050-1-0	Effluent Gross				.003	MGD	MGD								N
KY0044164	Golden Acres WWTF	Marshall	001-2	09/30/2019	Flow, in conduit or thru	50050-1-0	Effluent Gross						MGD								N
KY0044164	Golden Acres WWTF	Marshall	001-2	06/30/2019	Flow, in conduit or thru	50050-1-0	Effluent Gross						MGD								N
KY0044164	Golden Acres WWTF	Marshall	001-2	03/31/2019	Flow, in conduit or thru	50050-1-0	Effluent Gross						MGD								N
KY0044164	Golden Acres WWTF	Marshall	001-2	12/31/2018	Flow, in conduit or thru	50050-1-0	Effluent Gross		.015	MGD			MGD								N
KY0044164	Golden Acres WWTF	Marshall	001-2	12/31/2018	Flow, in conduit or thru	50050-1-0	Effluent Gross				.015	MGD	MGD								N
KY0044164	Golden Acres WWTF	Marshall	001-2	09/30/2018	Flow, in conduit or thru	50050-1-0	Effluent Gross		.025	MGD			MGD								N
KY0044164	Golden Acres WWTF	Marshall	001-2	09/30/2018	Flow, in conduit or thru	50050-1-0	Effluent Gross				.025	MGD	MGD								N
KY0044164	Golden Acres WWTF	Marshall	001-2	06/30/2018	Flow, in conduit or thru	50050-1-0	Effluent Gross		.02	MGD			MGD								N
KY0044164	Golden Acres WWTF	Marshall	001-2	06/30/2018	Flow, in conduit or thru	50050-1-0	Effluent Gross				.02	MGD	MGD								N
KY0044164	Golden Acres WWTF	Marshall	001-2	03/31/2018	Flow, in conduit or thru	50050-1-0	Effluent Gross		.015	MGD			MGD								N
KY0044164	Golden Acres WWTF	Marshall	001-2	03/31/2018	Flow, in conduit or thru	50050-1-0	Effluent Gross				.015	MGD	MGD								N
KY0044164	Golden Acres WWTF	Marshall	001-2	12/31/2017	Flow, in conduit or thru	50050-1-0	Effluent Gross		.015	MGD			MGD								N
KY0044164	Golden Acres WWTF	Marshall	001-2	12/31/2017	Flow, in conduit or thru	50050-1-0	Effluent Gross				.015	MGD	MGD								N
KY0044164	Golden Acres WWTF	Marshall	001-2	09/30/2017	Flow, in conduit or thru	50050-1-0	Effluent Gross		.01	MGD			MGD								N
KY0044164	Golden Acres WWTF	Marshall	001-2	09/30/2017	Flow, in conduit or thru	50050-1-0	Effluent Gross				.01	MGD	MGD								N
KY0044164	Golden Acres WWTF	Marshall	001-2	06/30/2017	Flow, in conduit or thru	50050-1-0	Effluent Gross		.027	MGD			MGD								N
KY0044164	Golden Acres WWTF	Marshall	001-2	06/30/2017	Flow, in conduit or thru	50050-1-0	Effluent Gross				.027	MGD	MGD								N
KY0044164	Golden Acres WWTF	Marshall	001-2	03/31/2017	Flow, in conduit or thru	50050-1-0	Effluent Gross		.027	MGD			MGD								N
KY0044164	Golden Acres WWTF	Marshall	001-2	03/31/2017	Flow, in conduit or thru	50050-1-0	Effluent Gross				.027	MGD	MGD								N
KY0044164	Golden Acres WWTF	Marshall	001-2	12/31/2016	Flow, in conduit or thru	50050-1-0	Effluent Gross		.021	MGD			MGD								N
KY0044164	Golden Acres WWTF	Marshall	001-2	12/31/2016	Flow, in conduit or thru	50050-1-0	Effluent Gross				.021	MGD	MGD								N
KY0044164	Golden Acres WWTF	Marshall	001-2	09/30/2016	Flow, in conduit or thru	50050-1-0	Effluent Gross		.015	MGD			MGD								N
KY0044164	Golden Acres WWTF	Marshall	001-2	09/30/2016	Flow, in conduit or thru	50050-1-0	Effluent Gross				.015	MGD	MGD								N
KY0044164	Golden Acres WWTF	Marshall	001-2	06/30/2016	Flow, in conduit or thru	50050-1-0	Effluent Gross		.009	MGD			MGD								N
KY0044164	Golden Acres WWTF	Marshall	001-2	06/30/2016	Flow, in conduit or thru	50050-1-0	Effluent Gross				.009	MGD	MGD								N
KY0044164	Golden Acres WWTF	Marshall	001-2	03/31/2016	Flow, in conduit or thru	50050-1-0	Effluent Gross		.03	MGD			MGD								N
KY0044164	Golden Acres WWTF	Marshall	001-2	03/31/2016	Flow, in conduit or thru	50050-1-0	Effluent Gross				.03	MGD	MGD								N
KY0044164	Golden Acres WWTF	Marshall	001-2	12/31/2015	Flow, in conduit or thru	50050-1-0	Effluent Gross		.025	MGD			MGD								N
KY0044164	Golden Acres WWTF	Marshall	001-2	12/31/2015	Flow, in conduit or thru	50050-1-0	Effluent Gross				.025	MGD	MGD								N
KY0044164	Golden Acres WWTF	Marshall	001-2	09/30/2015	Flow, in conduit or thru	50050-1-0	Effluent Gross		.018	MGD			MGD								N
KY0044164	Golden Acres WWTF	Marshall	001-2	09/30/2015	Flow, in conduit or thru	50050-1-0	Effluent Gross				.018	MGD	MGD								N
KY0044164	Golden Acres WWTF	Marshall	001-2	06/30/2015	Flow, in conduit or thru	50050-1-0	Effluent Gross		.025	MGD			MGD								N
KY0044164	Golden Acres WWTF	Marshall	001-2	06/30/2015	Flow, in conduit or thru	50050-1-0	Effluent Gross				.025	MGD	MGD								N
KY0044164	Golden Acres WWTF	Marshall	001-2	03/31/2015	Flow, in conduit or thru	50050-1-0	Effluent Gross		.017	MGD			MGD								N
KY0044164	Golden Acres WWTF	Marshall	001-2	03/31/2015	Flow, in conduit or thru	50050-1-0	Effluent Gross		.017	MGD			MGD								N
KY0044164	Golden Acres WWTF	Marshall	001-2	12/31/2019	Chlorine, total residual	50060-1-0	Effluent Gross	3173								.36	mg/L			mg/L	Y
KY0044164	Golden Acres WWTF	Marshall	001-2	12/31/2019	Chlorine, total residual	50060-1-0	Effluent Gross	1795										.36	mg/L	mg/L	Y
KY0044164	Golden Acres WWTF	Marshall	001-2	09/30/2019	Chlorine, total residual	50060-1-0	Effluent Gross													mg/L	N
KY0044164	Golden Acres WWTF	Marshall	001-2	06/30/2019	Chlorine, total residual	50060-1-0	Effluent Gross													mg/L	N
KY0044164	Golden Acres WWTF	Marshall	001-2	03/31/2019	Chlorine, total residual	50060-1-0	Effluent Gross													mg/L	N
KY0044164	Golden Acres WWTF	Marshall	001-2	12/31/2018	Chlorine, total residual	50060-1-0	Effluent Gross									0	mg/L			mg/L	N
KY0044164	Golden Acres WWTF	Marshall	001-2	12/31/2018	Chlorine, total residual	50060-1-0	Effluent Gross											0	mg/L	mg/L	N
KY0044164	Golden Acres WWTF	Marshall	001-2	09/30/2018	Chlorine, total residual	50060-1-0	Effluent Gross									.01	mg/L			mg/L	N
KY0044164	Golden Acres WWTF	Marshall	001-2	09/30/2018	Chlorine, total residual	50060-1-0	Effluent Gross											.01	mg/L	mg/L	N
KY0044164	Golden Acres WWTF	Marshall	001-2	06/30/2018	Chlorine, total residual	50060-1-0	Effluent Gross									0	mg/L			mg/L	N
KY0044164	Golden Acres WWTF	Marshall	001-2	06/30/2018	Chlorine, total residual	50060-1-0	Effluent Gross											0	mg/L	mg/L	N
KY0044164	Golden Acres WWTF	Marshall	001-2	03/31/2018	Chlorine, total residual	50060-1-0	Effluent Gross									0	mg/L			mg/L	N
KY0044164	Golden Acres WWTF	Marshall	001-2	03/31/2018	Chlorine, total residual	50060-1-0	Effluent Gross											0	mg/L	mg/L	N
KY0044164	Golden Acres WWTF	Marshall	001-2	12/31/2017	Chlorine, total residual	50060-1-0	Effluent Gross									0	mg/L			mg/L	N
KY0044164	Golden Acres WWTF	Marshall	001-2	12/31/2017	Chlorine, total residual	50060-1-0	Effluent Gross											0	mg/L	mg/L	N
KY0044164	Golden Acres WWTF	Marshall	001-2	09/30/2017	Chlorine, total residual	50060-1-0	Effluent Gross									0	mg/L			mg/L	N
KY0044164	Golden Acres WWTF	Marshall	001-2	09/30/2017	Chlorine, total residual	50060-1-0	Effluent Gross											0	mg/L	mg/L	N
KY0044164	Golden Acres WWTF	Marshall	001-2	06/30/2017	Chlorine, total residual	50060-1-0	Effluent Gross									0	mg/L			mg/L	N
KY0044164	Golden Acres WWTF	Marshall	001-2	06/30/2017	Chlorine, total residual	50060-1-0	Effluent Gross											0	mg/L	mg/L	N
KY0044164	Golden Acres WWTF	Marshall	001-2	03/31/2017	Chlorine, total residual	50060-1-0	Effluent Gross									0	mg/L			mg/L	N
KY0044164	Golden Acres WWTF	Marshall	001-2	03/31/2017	Chlorine, total residual	50060-1-0	Effluent Gross											0	mg/L	mg/L	N
KY0044164	Golden Acres WWTF	Marshall	001-2	12/31/2016	Chlorine, total residual	50060-1-0	Effluent Gross									0	mg/L			mg/L	N
KY0044164	Golden Acres WWTF	Marshall	001-2	12/31/2016	Chlorine, total residual	50060-1-0	Effluent Gross											0	mg/L	mg/L	N
KY0044164	Golden Acres WWTF	Marshall	001-2	09/30/2016	Chlorine, total residual	50060-1-0	Effluent Gross									0	mg/L			mg/L	N
KY0044164	Golden Acres WWTF	Marshall	001-2	09/30/2016	Chlorine, total residual	50060-1-0	Effluent Gross											0	mg/L	mg/L	N
KY0044164	Golden Acres WWTF	Marshall	001-2	06/30/2016	Chlorine, total residual	50060-1-0	Effluent Gross									0	mg/L			mg/L	N
KY0044164	Golden Acres WWTF	Marshall	001-2	06/30/2016	Chlorine, total residual	50060-1-0	Effluent Gross											0	mg/L	mg/L	N
KY0044164	Golden Acres WWTF	Marshall	001-2	03/31/2016	Chlorine, total residual	50060-1-0	Effluent Gross									0	mg/L			mg/L	N
KY0044164	Golden Acres WWTF	Marshall	001-2	03/31/2016	Chlorine, total residual	50060-1-0	Effluent Gross											0	mg/L	mg/L	N
KY0044164	Golden Acres WWTF	Marshall	001-2	12/31/2015	Chlorine, total residual	50060-1-0	Effluent Gross									0	mg/L			mg/L	N
KY0044164	Golden Acres WWTF	Marshall	001-2	12/31/2015	Chlorine, total residual	50060-1-0	Effluent Gross											0	mg/L	mg/L	N
KY0044164	Golden Acres WWTF	Marshall	001-2	09/30/2015	Chlorine, total residual	50060-1-0	Effluent Gross									0	mg/L			mg/L	N
KY0044164	Golden Acres WWTF	Marshall	001-2	09/30/2015	Chlorine, total residual	50060-1-0	Effluent Gross											0	mg/L	mg/L	N
KY0044164	Golden Acres WWTF	Marshall	001-2	06/30/2015	Chlorine, total residual	50060-1-0	Effluent Gross									0	mg/L			mg/L	N
KY0044164	Golden Acres WWTF	Marshall	001-2	06/30/2015	Chlorine, total residual	50060-1-0	Effluent Gross											0	mg/L	mg/L	N
KY0044164	Golden Acres WWTF	Marshall	001-2	03/31/2015	Chlorine, total residual	50060-1-0	Effluent Gross									0	mg/L			mg/L	N
KY0044164	Golden Acres WWTF	Marshall	001-2	03/31/2015	Chlorine, total residual	50060-1-0	Effluent Gross											0	mg/L	mg/L	N
KY0044164	Golden Acres WWTF	Marshall	001-2	12/31/2019	E. coli	51040-1-0	Effluent Gross	46054								60000	#/100mL			#/100mL	Y
KY0044164	Golden Acres WWTF	Marshall	001-2	12/31/2019	E. coli	51040-1-0	Effluent Gross	24900										60000	#/100mL	#/100mL	Y
KY0044164	Golden Acres WWTF	Marshall	001-2	09/30/2019	E. coli	51040-1-0	Effluent Gross													#/100mL	N
KY0044164	Golden Acres WWTF	Marshall	001-2	06/30/2019	E. coli	51040-1-0	Effluent Gross													#/100mL	N
KY0044164	Golden Acres WWTF	Marshall	001-2	03/31/2019	E. coli	51040-1-0	Effluent Gross													#/100mL	N
KY0044164	Golden Acres WWTF	Marshall	001-2	12/31/2018	E. coli	51040-1-0	Effluent Gross	1762								2420	#/100mL			#/100mL	Y
KY0044164	Golden Acres WWTF	Marshall	001-2	12/31/2018	E. coli	51040-1-0	Effluent Gross	908										2420	#/100mL	#/100mL	Y
KY0044164	Golden Acres WWTF	Marshall	001-2	09/30/2018	E. coli	51040-1-0	Effluent Gross	1762								2420	#/100mL			#/100mL	Y
KY0044164	Golden Acres WWTF	Marshall	001-2	09/30/2018	E. coli	51040-1-0	Effluent Gross	908										2420	#/100mL	#/100mL	Y
KY0044164	Golden Acres WWTF	Marshall	001-2	06/30/2018	E. coli	51040-1-0	Effluent Gross									1	#/100mL			#/100mL	N
KY0044164	Golden Acres WWTF	Marshall	001-2	06/30/2018	E. coli	51040-1-0	Effluent Gross											1	#/100mL	#/100mL	N
KY0044164	Golden Acres WWTF	Marshall	001-2	03/31/2018	E. coli	51040-1-0	Effluent Gross	1762								2420	#/100mL			#/100mL	Y
KY0044164	Golden Acres WWTF	Marshall	001-2	03/31/2018	E. coli	51040-1-0	Effluent Gross											.242	#/100mL	#/100mL	N
KY0044164	Golden Acres WWTF	Marshall	001-2	12/31/2017	E. coli	51040-1-0	Effluent Gross									1	#/100mL			#/100mL	N
KY0044164	Golden Acres WWTF	Marshall	001-2	12/31/2017	E. coli	51040-1-0	Effluent Gross											1	#/100mL	#/100mL	N
KY0044164	Golden Acres WWTF	Marshall	001-2	09/30/2017	E. coli	51040-1-0	Effluent Gross									1	#/100mL			#/100mL	N
KY0044164	Golden Acres WWTF	Marshall	001-2	09/30/2017	E. coli	51040-1-0	Effluent Gross											1	#/100mL	#/100mL	N
KY0044164	Golden Acres WWTF	Marshall	001-2	06/30/2017	E. coli	51040-1-0	Effluent Gross									1	#/100mL			#/100mL	N

KY0044164	Golden Acres WWTF	Marshall	001-2	06/30/2017	E. coli	51040-1-0	Effluent Gross											1	#/100mL	#/100mL	N
KY0044164	Golden Acres WWTF	Marshall	001-2	03/31/2017	E. coli	51040-1-0	Effluent Gross									1	#/100mL			#/100mL	N
KY0044164	Golden Acres WWTF	Marshall	001-2	03/31/2017	E. coli	51040-1-0	Effluent Gross											1	#/100mL	#/100mL	N
KY0044164	Golden Acres WWTF	Marshall	001-2	12/31/2016	E. coli	51040-1-0	Effluent Gross									1	#/100mL			#/100mL	N
KY0044164	Golden Acres WWTF	Marshall	001-2	12/31/2016	E. coli	51040-1-0	Effluent Gross											1	#/100mL	#/100mL	N
KY0044164	Golden Acres WWTF	Marshall	001-2	09/30/2016	E. coli	51040-1-0	Effluent Gross									1	#/100mL			#/100mL	N
KY0044164	Golden Acres WWTF	Marshall	001-2	09/30/2016	E. coli	51040-1-0	Effluent Gross											1	#/100mL	#/100mL	N
KY0044164	Golden Acres WWTF	Marshall	001-2	06/30/2016	E. coli	51040-1-0	Effluent Gross									1	#/100mL			#/100mL	N
KY0044164	Golden Acres WWTF	Marshall	001-2	06/30/2016	E. coli	51040-1-0	Effluent Gross											1	#/100mL	#/100mL	N
KY0044164	Golden Acres WWTF	Marshall	001-2	03/31/2016	E. coli	51040-1-0	Effluent Gross									1	#/100mL			#/100mL	N
KY0044164	Golden Acres WWTF	Marshall	001-2	03/31/2016	E. coli	51040-1-0	Effluent Gross											1	#/100mL	#/100mL	N
KY0044164	Golden Acres WWTF	Marshall	001-2	12/31/2015	E. coli	51040-1-0	Effluent Gross									1	#/100mL			#/100mL	N
KY0044164	Golden Acres WWTF	Marshall	001-2	12/31/2015	E. coli	51040-1-0	Effluent Gross											1	#/100mL	#/100mL	N
KY0044164	Golden Acres WWTF	Marshall	001-2	09/30/2015	E. coli	51040-1-0	Effluent Gross									1	#/100mL			#/100mL	N
KY0044164	Golden Acres WWTF	Marshall	001-2	09/30/2015	E. coli	51040-1-0	Effluent Gross											1	#/100mL	#/100mL	N
KY0044164	Golden Acres WWTF	Marshall	001-2	06/30/2015	E. coli	51040-1-0	Effluent Gross									1	#/100mL			#/100mL	N
KY0044164	Golden Acres WWTF	Marshall	001-2	06/30/2015	E. coli	51040-1-0	Effluent Gross											1	#/100mL	#/100mL	N
KY0044164	Golden Acres WWTF	Marshall	001-2	03/31/2015	E. coli	51040-1-0	Effluent Gross									1	#/100mL			#/100mL	N
KY0044164	Golden Acres WWTF	Marshall	001-2	03/31/2015	E. coli	51040-1-0	Effluent Gross											1	#/100mL	#/100mL	N
KY0044164	Golden Acres WWTF	Marshall	001-2	12/31/2019	BOD, carbonaceous [5 day,	80082-1-0	Effluent Gross		2	lb/d			lb/d								N
KY0044164	Golden Acres WWTF	Marshall	001-2	12/31/2019	BOD, carbonaceous [5 day,	80082-1-0	Effluent Gross				3	lb/d	lb/d								N
KY0044164	Golden Acres WWTF	Marshall	001-2	12/31/2019	BOD, carbonaceous [5 day,	80082-1-0	Effluent Gross	128								57	mg/L			mg/L	Y
KY0044164	Golden Acres WWTF	Marshall	001-2	12/31/2019	BOD, carbonaceous [5 day,	80082-1-0	Effluent Gross	193										110	mg/L	mg/L	Y
KY0044164	Golden Acres WWTF	Marshall	001-2	09/30/2019	BOD, carbonaceous [5 day,	80082-1-0	Effluent Gross						lb/d								N
KY0044164	Golden Acres WWTF	Marshall	001-2	09/30/2019	BOD, carbonaceous [5 day,	80082-1-0	Effluent Gross													mg/L	N
KY0044164	Golden Acres WWTF	Marshall	001-2	06/30/2019	BOD, carbonaceous [5 day,	80082-1-0	Effluent Gross						lb/d								N
KY0044164	Golden Acres WWTF	Marshall	001-2	06/30/2019	BOD, carbonaceous [5 day,	80082-1-0	Effluent Gross													mg/L	N
KY0044164	Golden Acres WWTF	Marshall	001-2	03/31/2019	BOD, carbonaceous [5 day,	80082-1-0	Effluent Gross						lb/d								N
KY0044164	Golden Acres WWTF	Marshall	001-2	03/31/2019	BOD, carbonaceous [5 day,	80082-1-0	Effluent Gross													mg/L	N
KY0044164	Golden Acres WWTF	Marshall	001-2	12/31/2018	BOD, carbonaceous [5 day,	80082-1-0	Effluent Gross		1.626	lb/d			lb/d								N
KY0044164	Golden Acres WWTF	Marshall	001-2	12/31/2018	BOD, carbonaceous [5 day,	80082-1-0	Effluent Gross				1.626	lb/d	lb/d								N
KY0044164	Golden Acres WWTF	Marshall	001-2	12/31/2018	BOD, carbonaceous [5 day,	80082-1-0	Effluent Gross									13	mg/L			mg/L	N
KY0044164	Golden Acres WWTF	Marshall	001-2	12/31/2018	BOD, carbonaceous [5 day,	80082-1-0	Effluent Gross											13	mg/L	mg/L	N
KY0044164	Golden Acres WWTF	Marshall	001-2	09/30/2018	BOD, carbonaceous [5 day,	80082-1-0	Effluent Gross	44	7.506	lb/d			lb/d								Y
KY0044164	Golden Acres WWTF	Marshall	001-2	09/30/2018	BOD, carbonaceous [5 day,	80082-1-0	Effluent Gross				7.506	lb/d	lb/d								N
KY0044164	Golden Acres WWTF	Marshall	001-2	09/30/2018	BOD, carbonaceous [5 day,	80082-1-0	Effluent Gross	44								36	mg/L			mg/L	Y
KY0044164	Golden Acres WWTF	Marshall	001-2	09/30/2018	BOD, carbonaceous [5 day,	80082-1-0	Effluent Gross											36	mg/L	mg/L	N
KY0044164	Golden Acres WWTF	Marshall	001-2	06/30/2018	BOD, carbonaceous [5 day,	80082-1-0	Effluent Gross		1.617	lb/d			lb/d								N
KY0044164	Golden Acres WWTF	Marshall	001-2	06/30/2018	BOD, carbonaceous [5 day,	80082-1-0	Effluent Gross				1.617	lb/d	lb/d								N
KY0044164	Golden Acres WWTF	Marshall	001-2	06/30/2018	BOD, carbonaceous [5 day,	80082-1-0	Effluent Gross									9.7	mg/L			mg/L	N
KY0044164	Golden Acres WWTF	Marshall	001-2	06/30/2018	BOD, carbonaceous [5 day,	80082-1-0	Effluent Gross											9.7	mg/L	mg/L	N
KY0044164	Golden Acres WWTF	Marshall	001-2	03/31/2018	BOD, carbonaceous [5 day,	80082-1-0	Effluent Gross		.9632	lb/d			lb/d								N
KY0044164	Golden Acres WWTF	Marshall	001-2	03/31/2018	BOD, carbonaceous [5 day,	80082-1-0	Effluent Gross				.9632	lb/d	lb/d								N
KY0044164	Golden Acres WWTF	Marshall	001-2	03/31/2018	BOD, carbonaceous [5 day,	80082-1-0	Effluent Gross									7.7	mg/L			mg/L	N
KY0044164	Golden Acres WWTF	Marshall	001-2	03/31/2018	BOD, carbonaceous [5 day,	80082-1-0	Effluent Gross											7.7	mg/L	mg/L	N
KY0044164	Golden Acres WWTF	Marshall	001-2	12/31/2017	BOD, carbonaceous [5 day,	80082-1-0	Effluent Gross		.688	lb/d			lb/d								N
KY0044164	Golden Acres WWTF	Marshall	001-2	12/31/2017	BOD, carbonaceous [5 day,	80082-1-0	Effluent Gross				.688	lb/d	lb/d								N
KY0044164	Golden Acres WWTF	Marshall	001-2	12/31/2017	BOD, carbonaceous [5 day,	80082-1-0	Effluent Gross									5.5	mg/L			mg/L	N
KY0044164	Golden Acres WWTF	Marshall	001-2	12/31/2017	BOD, carbonaceous [5 day,	80082-1-0	Effluent Gross											5.5	mg/L	mg/L	N
KY0044164	Golden Acres WWTF	Marshall	001-2	09/30/2017	BOD, carbonaceous [5 day,	80082-1-0	Effluent Gross		.417	lb/d			lb/d								N
KY0044164	Golden Acres WWTF	Marshall	001-2	09/30/2017	BOD, carbonaceous [5 day,	80082-1-0	Effluent Gross				.417	lb/d	lb/d								N
KY0044164	Golden Acres WWTF	Marshall	001-2	09/30/2017	BOD, carbonaceous [5 day,	80082-1-0	Effluent Gross									5	mg/L			mg/L	N
KY0044164	Golden Acres WWTF	Marshall	001-2	09/30/2017	BOD, carbonaceous [5 day,	80082-1-0	Effluent Gross											5	mg/L	mg/L	N
KY0044164	Golden Acres WWTF	Marshall	001-2	06/30/2017	BOD, carbonaceous [5 day,	80082-1-0	Effluent Gross		1.125	lb/d			lb/d								N
KY0044164	Golden Acres WWTF	Marshall	001-2	06/30/2017	BOD, carbonaceous [5 day,	80082-1-0	Effluent Gross				1.125	lb/d	lb/d								N
KY0044164	Golden Acres WWTF	Marshall	001-2	06/30/2017	BOD, carbonaceous [5 day,	80082-1-0	Effluent Gross									5	mg/L			mg/L	N
KY0044164	Golden Acres WWTF	Marshall	001-2	06/30/2017	BOD, carbonaceous [5 day,	80082-1-0	Effluent Gross											5	mg/L	mg/L	N
KY0044164	Golden Acres WWTF	Marshall	001-2	03/31/2017	BOD, carbonaceous [5 day,	80082-1-0	Effluent Gross		1.125	lb/d			lb/d								N
KY0044164	Golden Acres WWTF	Marshall	001-2	03/31/2017	BOD, carbonaceous [5 day,	80082-1-0	Effluent Gross				1.125	lb/d	lb/d								N
KY0044164	Golden Acres WWTF	Marshall	001-2	03/31/2017	BOD, carbonaceous [5 day,	80082-1-0	Effluent Gross									5	mg/L			mg/L	N
KY0044164	Golden Acres WWTF	Marshall	001-2	03/31/2017	BOD, carbonaceous [5 day,	80082-1-0	Effluent Gross											5	mg/L	mg/L	N
KY0044164	Golden Acres WWTF	Marshall	001-2	12/31/2016	BOD, carbonaceous [5 day,	80082-1-0	Effluent Gross		.8757	lb/d			lb/d								N
KY0044164	Golden Acres WWTF	Marshall	001-2	12/31/2016	BOD, carbonaceous [5 day,	80082-1-0	Effluent Gross				.8757	lb/d	lb/d								N
KY0044164	Golden Acres WWTF	Marshall	001-2	12/31/2016	BOD, carbonaceous [5 day,	80082-1-0	Effluent Gross									5	mg/L			mg/L	N
KY0044164	Golden Acres WWTF	Marshall	001-2	12/31/2016	BOD, carbonaceous [5 day,	80082-1-0	Effluent Gross											5	mg/L	mg/L	N
KY0044164	Golden Acres WWTF	Marshall	001-2	09/30/2016	BOD, carbonaceous [5 day,	80082-1-0	Effluent Gross		.6255	lb/d			lb/d								N
KY0044164	Golden Acres WWTF	Marshall	001-2	09/30/2016	BOD, carbonaceous [5 day,	80082-1-0	Effluent Gross				.6255	lb/d	lb/d								N
KY0044164	Golden Acres WWTF	Marshall	001-2	09/30/2016	BOD, carbonaceous [5 day,	80082-1-0	Effluent Gross									5	mg/L			mg/L	N
KY0044164	Golden Acres WWTF	Marshall	001-2	09/30/2016	BOD, carbonaceous [5 day,	80082-1-0	Effluent Gross											5	mg/L	mg/L	N
KY0044164	Golden Acres WWTF	Marshall	001-2	06/30/2016	BOD, carbonaceous [5 day,	80082-1-0	Effluent Gross		.9007	lb/d			lb/d								N
KY0044164	Golden Acres WWTF	Marshall	001-2	06/30/2016	BOD, carbonaceous [5 day,	80082-1-0	Effluent Gross				.9007	lb/d	lb/d								N
KY0044164	Golden Acres WWTF	Marshall	001-2	06/30/2016	BOD, carbonaceous [5 day,	80082-1-0	Effluent Gross									12	mg/L			mg/L	N
KY0044164	Golden Acres WWTF	Marshall	001-2	06/30/2016	BOD, carbonaceous [5 day,	80082-1-0	Effluent Gross											12	mg/L	mg/L	N
KY0044164	Golden Acres WWTF	Marshall	001-2	03/31/2016	BOD, carbonaceous [5 day,	80082-1-0	Effluent Gross		1.251	lb/d			lb/d								N
KY0044164	Golden Acres WWTF	Marshall	001-2	03/31/2016	BOD, carbonaceous [5 day,	80082-1-0	Effluent Gross				1.251	lb/d	lb/d								N
KY0044164	Golden Acres WWTF	Marshall	001-2	03/31/2016	BOD, carbonaceous [5 day,	80082-1-0	Effluent Gross									5	mg/L			mg/L	N
KY0044164	Golden Acres WWTF	Marshall	001-2	03/31/2016	BOD, carbonaceous [5 day,	80082-1-0	Effluent Gross											5	mg/L	mg/L	N
KY0044164	Golden Acres WWTF	Marshall	001-2	12/31/2015	BOD, carbonaceous [5 day,	80082-1-0	Effluent Gross		2.293	lb/d			lb/d								N
KY0044164	Golden Acres WWTF	Marshall	001-2	12/31/2015	BOD, carbonaceous [5 day,	80082-1-0	Effluent Gross				2.293	lb/d	lb/d								N
KY0044164	Golden Acres WWTF	Marshall	001-2	12/31/2015	BOD, carbonaceous [5 day,	80082-1-0	Effluent Gross									11	mg/L			mg/L	N
KY0044164	Golden Acres WWTF	Marshall	001-2	12/31/2015	BOD, carbonaceous [5 day,	80082-1-0	Effluent Gross											11	mg/L	mg/L	N
KY0044164	Golden Acres WWTF	Marshall	001-2	09/30/2015	BOD, carbonaceous [5 day,	80082-1-0	Effluent Gross		.7506	lb/d			lb/d								N
KY0044164	Golden Acres WWTF	Marshall	001-2	09/30/2015	BOD, carbonaceous [5 day,	80082-1-0	Effluent Gross				.7506	lb/d	lb/d								N
KY0044164	Golden Acres WWTF	Marshall	001-2	09/30/2015	BOD, carbonaceous [5 day,	80082-1-0	Effluent Gross									5	mg/L			mg/L	N
KY0044164	Golden Acres WWTF	Marshall	001-2	09/30/2015	BOD, carbonaceous [5 day,	80082-1-0	Effluent Gross											5	mg/L	mg/L	N
KY0044164	Golden Acres WWTF	Marshall	001-2	06/30/2015	BOD, carbonaceous [5 day,	80082-1-0	Effluent Gross		1.042	lb/d			lb/d								N
KY0044164	Golden Acres WWTF	Marshall	001-2	06/30/2015	BOD, carbonaceous [5 day,	80082-1-0	Effluent Gross				1.042	lb/d	lb/d								N
KY0044164	Golden Acres WWTF	Marshall	001-2	06/30/2015	BOD, carbonaceous [5 day,	80082-1-0	Effluent Gross									5	mg/L			mg/L	N
KY0044164	Golden Acres WWTF	Marshall	001-2	06/30/2015	BOD, carbonaceous [5 day,	80082-1-0	Effluent Gross											5	mg/L	mg/L	N
KY0044164	Golden Acres WWTF	Marshall	001-2	03/31/2015	BOD, carbonaceous [5 day,	80082-1-0	Effluent Gross		1.034	lb/d			lb/d								N
KY0044164	Golden Acres WWTF	Marshall	001-2	03/31/2015	BOD, carbonaceous [5 day,	80082-1-0	Effluent Gross				1.034	lb/d	lb/d								N
KY0044164	Golden Acres WWTF	Marshall	001-2	03/31/2015	BOD, carbonaceous [5 day,	80082-1-0	Effluent Gross									7.3	mg/L			mg/L	N
KY0044164	Golden Acres WWTF	Marshall	001-2	03/31/2015	BOD, carbonaceous [5 day,	80082-1-0	Effluent Gross											7.3	mg/L	mg/L	N

Non-Receipt Vio. Exists	DMR Received Date
N	1/17/2020
Y	
Y	
Y	
N	2/27/2019
N	11/5/2018
N	7/13/2018
N	5/28/2018
N	1/11/2018
N	10/28/2017
N	7/26/2017
N	4/28/2017
N	1/16/2017
N	10/29/2016
N	7/26/2016
N	4/28/2016
N	1/28/2016
N	10/28/2015
N	7/27/2015
N	4/12/2015
N	1/17/2020
N	1/17/2020
Y	
Y	
Y	
N	2/27/2019
N	2/27/2019
N	11/5/2018
N	11/5/2018
N	7/13/2018
N	7/13/2018
N	5/28/2018
N	5/28/2018
N	1/11/2018
N	1/11/2018
N	10/28/2017
N	10/28/2017
N	7/26/2017
N	7/26/2017
N	4/28/2017
N	4/28/2017
N	1/16/2017
N	1/16/2017
N	10/29/2016
N	10/29/2016
N	7/26/2016
N	7/26/2016
N	4/28/2016
N	4/28/2016
N	1/28/2016
N	1/28/2016
N	10/28/2015
N	10/28/2015
N	7/27/2015
N	7/27/2015
N	4/12/2015
N	4/12/2015
N	1/17/2020
N	1/17/2020
N	1/17/2020
N	1/17/2020
Y	
Y	
Y	
Y	
Y	
Y	
N	2/27/2019
N	2/27/2019
N	2/27/2019
N	2/27/2019
N	11/5/2018
N	11/5/2018
N	11/5/2018
N	11/5/2018
N	7/13/2018
N	7/13/2018
N	7/13/2018
N	7/13/2018
N	5/28/2018
N	5/28/2018
N	5/28/2018
N	5/28/2018
N	1/11/2018
N	1/11/2018
N	1/11/2018
N	1/11/2018
N	10/28/2017
N	10/28/2017
N	10/28/2017
N	10/28/2017
N	7/26/2017
N	7/26/2017
N	7/26/2017
N	7/26/2017
N	4/28/2017
N	4/28/2017
N	4/28/2017
N	4/28/2017
N	1/16/2017
N	1/16/2017
N	1/16/2017
N	1/16/2017
N	10/29/2016
N	10/29/2016
N	10/29/2016
N	10/29/2016
N	7/26/2016
N	7/26/2016
N	7/26/2016
N	7/26/2016

N	4/28/2016
N	4/28/2016
N	4/28/2016
N	4/28/2016
N	1/28/2016
N	1/28/2016
N	1/28/2016
N	1/28/2016
N	10/28/2015
N	10/28/2015
N	10/28/2015
N	10/28/2015
N	7/27/2015
N	7/27/2015
N	7/27/2015
N	7/27/2015
N	4/12/2015
N	4/12/2015
N	4/12/2015
N	4/12/2015
N	1/17/2020
N	1/17/2020
Y	
Y	
Y	
Y	
Y	
Y	
N	2/27/2019
N	2/27/2019
N	11/5/2018
N	11/5/2018
N	11/5/2018
N	11/5/2018
N	7/13/2018
N	7/13/2018
N	7/13/2018
N	7/13/2018
N	5/28/2018
N	5/28/2018
N	1/11/2018
N	1/11/2018
N	10/28/2017
N	10/28/2017
N	10/28/2017
N	10/28/2017
N	7/26/2017
N	7/26/2017
N	7/26/2017
N	7/26/2017
N	4/28/2017
N	4/28/2017
N	1/16/2017
N	1/16/2017
N	10/29/2016
N	10/29/2016
N	10/29/2016
N	10/29/2016
N	7/26/2016
N	10/29/2016
N	10/29/2016
N	10/29/2016
N	7/26/2016
N	7/26/2016
N	7/26/2016
N	7/26/2016
N	4/28/2016
N	4/28/2016
N	1/28/2016
N	1/28/2016
N	10/28/2015
N	10/28/2015
N	10/28/2015
N	10/28/2015
N	7/27/2015
N	7/27/2015
N	7/27/2015
N	7/27/2015
N	4/12/2015
N	4/12/2015
N	1/17/2020
N	1/17/2020
N	1/17/2020
N	1/17/2020
Y	
Y	
Y	
Y	
Y	
Y	
N	2/27/2019
N	2/27/2019
N	2/27/2019
N	2/27/2019
N	11/5/2018
N	11/5/2018
N	7/13/2018
N	7/13/2018
N	5/28/2018
N	5/28/2018
N	5/28/2018
N	5/28/2018
N	1/11/2018
N	1/11/2018
N	1/11/2018
N	1/11/2018
N	10/28/2017
N	10/28/2017
N	7/26/2017
N	7/26/2017
N	4/28/2017
N	4/28/2017
N	4/28/2017
N	4/28/2017
N	1/16/2017
N	1/16/2017
N	1/16/2017
N	1/16/2017

N	10/29/2016
N	10/29/2016
N	7/26/2016
N	7/26/2016
N	4/28/2016
N	4/28/2016
N	4/28/2016
N	4/28/2016
N	1/28/2016
N	1/28/2016
N	1/28/2016
N	1/28/2016
N	10/28/2015
N	10/28/2015
N	10/28/2015
N	10/28/2015
N	7/27/2015
N	7/27/2015
N	4/12/2015
N	4/12/2015
N	4/12/2015
N	4/12/2015
N	1/17/2020
N	1/17/2020
Y	
Y	
Y	
N	2/27/2019
N	2/27/2019
N	11/5/2018
N	11/5/2018
N	7/13/2018
N	7/13/2018
N	5/28/2018
N	5/28/2018
N	1/11/2018
N	1/11/2018
N	10/28/2017
N	10/28/2017
N	7/26/2017
N	7/26/2017
N	4/28/2017
N	4/28/2017
N	1/16/2017
N	1/16/2017
N	10/29/2016
N	10/29/2016
N	7/26/2016
N	7/26/2016
N	4/28/2016
N	4/28/2016
N	1/28/2016
N	1/28/2016
N	10/28/2015
N	10/28/2015
N	7/27/2015
N	7/27/2015
N	4/12/2015
N	4/12/2015
N	1/17/2020
N	1/17/2020
Y	
Y	
Y	
N	2/27/2019
N	2/27/2019
N	11/5/2018
N	11/5/2018
N	7/13/2018
N	7/13/2018
N	5/28/2018
N	5/28/2018
N	1/11/2018
N	1/11/2018
N	10/28/2017
N	10/28/2017
N	7/26/2017

N	7/26/2017
N	4/28/2017
N	4/28/2017
N	1/16/2017
N	1/16/2017
N	10/29/2016
N	10/29/2016
N	7/26/2016
N	7/26/2016
N	4/28/2016
N	4/28/2016
N	1/28/2016
N	1/28/2016
N	1/28/2016
N	10/28/2015
N	10/28/2015
N	7/27/2015
N	7/27/2015
N	4/12/2015
N	4/12/2015
N	1/17/2020
N	1/17/2020
N	1/17/2020
N	1/17/2020
Y	
Y	
Y	
Y	
Y	
Y	
N	2/27/2019
N	2/27/2019
N	2/27/2019
N	2/27/2019
N	11/5/2018
N	11/5/2018
N	11/5/2018
N	11/5/2018
N	7/13/2018
N	7/13/2018
N	7/13/2018
N	7/13/2018
N	5/28/2018
N	5/28/2018
N	5/28/2018
N	5/28/2018
N	1/11/2018
N	1/11/2018
N	1/11/2018
N	1/11/2018
N	10/28/2017
N	10/28/2017
N	10/28/2017
N	10/28/2017
N	7/26/2017
N	7/26/2017
N	7/26/2017
N	7/26/2017
N	4/28/2017
N	4/28/2017
N	7/26/2017
N	7/26/2017
N	4/28/2017
N	4/28/2017
N	4/28/2017
N	4/28/2017
N	1/16/2017
N	1/16/2017
N	1/16/2017
N	1/16/2017
N	10/29/2016
N	10/29/2016
N	10/29/2016
N	10/29/2016
N	7/26/2016
N	7/26/2016
N	7/26/2016
N	7/26/2016
N	4/28/2016
N	4/28/2016
N	4/28/2016
N	4/28/2016
N	1/28/2016
N	1/28/2016
N	1/28/2016
N	1/28/2016
N	10/28/2015
N	10/28/2015
N	10/28/2015
N	10/28/2015
N	7/27/2015
N	7/27/2015
N	7/27/2015
N	7/27/2015
N	4/12/2015
N	4/12/2015
N	4/12/2015
N	4/12/2015

KEY | < ??? | NODI B | NODI **E** | NODI **8**

NPDES ID	Permit Name	County Name	Perm Feature ID-Limit Set	Mon. Period End Date	Parameter Desc	Param Cd - MLC - Season ID	Monitoring Location Desc	Worst % exced.	Quantity 1	Q1 DMR Value Unit Short Desc	Quantity 2	Q2 DMR Value Unit Short Desc	Limit Value - Quantity Units	Concentration 1	C1 DMR Value Unit Short Desc	Concentration 2	C2 DMR Value Unit Short Desc	Concentration 3	C3 DMR Value Unit Short Desc	Limit Value - Concentration Units	Effluent Vio. Exists
KY0045390	Airview WWTF	Hardin	001-1	09/30/2019	Oxygen, dissolved [DO]	00300-1-0	Effluent Gross	11						6.2	mg/L					mg/L	Y
KY0045390	Airview WWTF	Hardin	001-1	08/31/2019	Oxygen, dissolved [DO]	00300-1-0	Effluent Gross													mg/L	N
KY0045390	Airview WWTF	Hardin	001-1	07/31/2019	Oxygen, dissolved [DO]	00300-1-0	Effluent Gross													mg/L	N
KY0045390	Airview WWTF	Hardin	001-1	06/30/2019	Oxygen, dissolved [DO]	00300-1-0	Effluent Gross													mg/L	N
KY0045390	Airview WWTF	Hardin	001-1	05/31/2019	Oxygen, dissolved [DO]	00300-1-0	Effluent Gross													mg/L	N
KY0045390	Airview WWTF	Hardin	001-1	04/30/2019	Oxygen, dissolved [DO]	00300-1-0	Effluent Gross													mg/L	N
KY0045390	Airview WWTF	Hardin	001-1	03/31/2019	Oxygen, dissolved [DO]	00300-1-0	Effluent Gross							7.09	mg/L					mg/L	N
KY0045390	Airview WWTF	Hardin	001-1	02/28/2019	Oxygen, dissolved [DO]	00300-1-0	Effluent Gross							7.22	mg/L					mg/L	N
KY0045390	Airview WWTF	Hardin	001-1	01/31/2019	Oxygen, dissolved [DO]	00300-1-0	Effluent Gross							7.04	mg/L					mg/L	N
KY0045390	Airview WWTF	Hardin	001-1	12/31/2018	Oxygen, dissolved [DO]	00300-1-0	Effluent Gross													mg/L	N
KY0045390	Airview WWTF	Hardin	001-1	11/30/2018	Oxygen, dissolved [DO]	00300-1-0	Effluent Gross							7.07	mg/L					mg/L	N
KY0045390	Airview WWTF	Hardin	001-1	10/31/2018	Oxygen, dissolved [DO]	00300-1-0	Effluent Gross							7.04	mg/L					mg/L	N
KY0045390	Airview WWTF	Hardin	001-1	09/30/2018	Oxygen, dissolved [DO]	00300-1-0	Effluent Gross							7.04	mg/L					mg/L	N
KY0045390	Airview WWTF	Hardin	001-1	08/31/2018	Oxygen, dissolved [DO]	00300-1-0	Effluent Gross	3						6.78	mg/L					mg/L	Y
KY0045390	Airview WWTF	Hardin	001-1	07/31/2018	Oxygen, dissolved [DO]	00300-1-0	Effluent Gross	2						6.88	mg/L					mg/L	Y
KY0045390	Airview WWTF	Hardin	001-1	06/30/2018	Oxygen, dissolved [DO]	00300-1-0	Effluent Gross	4						6.74	mg/L					mg/L	Y
KY0045390	Airview WWTF	Hardin	001-1	05/31/2018	Oxygen, dissolved [DO]	00300-1-0	Effluent Gross	2						6.86	mg/L					mg/L	Y
KY0045390	Airview WWTF	Hardin	001-1	04/30/2018	Oxygen, dissolved [DO]	00300-1-0	Effluent Gross	9						6.37	mg/L					mg/L	Y
KY0045390	Airview WWTF	Hardin	001-1	03/31/2018	Oxygen, dissolved [DO]	00300-1-0	Effluent Gross	20						5.62	mg/L					mg/L	Y
KY0045390	Airview WWTF	Hardin	001-1	02/28/2018	Oxygen, dissolved [DO]	00300-1-0	Effluent Gross	4						6.71	mg/L					mg/L	Y
KY0045390	Airview WWTF	Hardin	001-1	01/31/2018	Oxygen, dissolved [DO]	00300-1-0	Effluent Gross							7.25	mg/L					mg/L	N
KY0045390	Airview WWTF	Hardin	001-1	12/31/2017	Oxygen, dissolved [DO]	00300-1-0	Effluent Gross							7.18	mg/L					mg/L	N
KY0045390	Airview WWTF	Hardin	001-1	11/30/2017	Oxygen, dissolved [DO]	00300-1-0	Effluent Gross							7.01	mg/L					mg/L	N
KY0045390	Airview WWTF	Hardin	001-1	10/31/2017	Oxygen, dissolved [DO]	00300-1-0	Effluent Gross	8						6.44	mg/L					mg/L	Y
KY0045390	Airview WWTF	Hardin	001-1	09/30/2017	Oxygen, dissolved [DO]	00300-1-0	Effluent Gross							7.45	mg/L					mg/L	N
KY0045390	Airview WWTF	Hardin	001-1	08/31/2017	Oxygen, dissolved [DO]	00300-1-0	Effluent Gross							7.17	mg/L					mg/L	N
KY0045390	Airview WWTF	Hardin	001-1	07/31/2017	Oxygen, dissolved [DO]	00300-1-0	Effluent Gross							7.09	mg/L					mg/L	N
KY0045390	Airview WWTF	Hardin	001-1	06/30/2017	Oxygen, dissolved [DO]	00300-1-0	Effluent Gross							7.2	mg/L					mg/L	N
KY0045390	Airview WWTF	Hardin	001-1	05/31/2017	Oxygen, dissolved [DO]	00300-1-0	Effluent Gross							7.29	mg/L					mg/L	N
KY0045390	Airview WWTF	Hardin	001-1	04/30/2017	Oxygen, dissolved [DO]	00300-1-0	Effluent Gross							7.63	mg/L					mg/L	N
KY0045390	Airview WWTF	Hardin	001-1	03/31/2017	Oxygen, dissolved [DO]	00300-1-0	Effluent Gross							7.55	mg/L					mg/L	N
KY0045390	Airview WWTF	Hardin	001-1	02/28/2017	Oxygen, dissolved [DO]	00300-1-0	Effluent Gross							7.4	mg/L					mg/L	N
KY0045390	Airview WWTF	Hardin	001-1	01/31/2017	Oxygen, dissolved [DO]	00300-1-0	Effluent Gross	11						6.21	mg/L					mg/L	Y
KY0045390	Airview WWTF	Hardin	001-1	12/31/2016	Oxygen, dissolved [DO]	00300-1-0	Effluent Gross	3						6.79	mg/L					mg/L	Y
KY0045390	Airview WWTF	Hardin	001-1	11/30/2016	Oxygen, dissolved [DO]	00300-1-0	Effluent Gross							7.25	mg/L					mg/L	N
KY0045390	Airview WWTF	Hardin	001-1	10/31/2016	Oxygen, dissolved [DO]	00300-1-0	Effluent Gross	17						5.81	mg/L					mg/L	Y
KY0045390	Airview WWTF	Hardin	001-1	09/30/2016	Oxygen, dissolved [DO]	00300-1-0	Effluent Gross	1						6.91	mg/L					mg/L	Y
KY0045390	Airview WWTF	Hardin	001-1	08/31/2016	Oxygen, dissolved [DO]	00300-1-0	Effluent Gross							7.08	mg/L					mg/L	N
KY0045390	Airview WWTF	Hardin	001-1	07/31/2016	Oxygen, dissolved [DO]	00300-1-0	Effluent Gross	73						1.88	mg/L					mg/L	Y
KY0045390	Airview WWTF	Hardin	001-1	06/30/2016	Oxygen, dissolved [DO]	00300-1-0	Effluent Gross							7.04	mg/L					mg/L	N
KY0045390	Airview WWTF	Hardin	001-1	05/31/2016	Oxygen, dissolved [DO]	00300-1-0	Effluent Gross	65						2.44	mg/L					mg/L	Y
KY0045390	Airview WWTF	Hardin	001-1	04/30/2016	Oxygen, dissolved [DO]	00300-1-0	Effluent Gross	29						4.98	mg/L					mg/L	Y
KY0045390	Airview WWTF	Hardin	001-1	03/31/2016	Oxygen, dissolved [DO]	00300-1-0	Effluent Gross							7.16	mg/L					mg/L	N
KY0045390	Airview WWTF	Hardin	001-1	02/29/2016	Oxygen, dissolved [DO]	00300-1-0	Effluent Gross	31						4.81	mg/L					mg/L	Y
KY0045390	Airview WWTF	Hardin	001-1	01/31/2016	Oxygen, dissolved [DO]	00300-1-0	Effluent Gross							7.11	mg/L					mg/L	N
KY0045390	Airview WWTF	Hardin	001-1	12/31/2015	Oxygen, dissolved [DO]	00300-1-0	Effluent Gross	13						6.08	mg/L					mg/L	Y
KY0045390	Airview WWTF	Hardin	001-1	11/30/2015	Oxygen, dissolved [DO]	00300-1-0	Effluent Gross	9						6.34	mg/L					mg/L	Y
KY0045390	Airview WWTF	Hardin	001-1	10/31/2015	Oxygen, dissolved [DO]	00300-1-0	Effluent Gross	44						3.91	mg/L					mg/L	Y
KY0045390	Airview WWTF	Hardin	001-1	09/30/2015	Oxygen, dissolved [DO]	00300-1-0	Effluent Gross	43						3.98	mg/L					mg/L	Y
KY0045390	Airview WWTF	Hardin	001-1	08/31/2015	Oxygen, dissolved [DO]	00300-1-0	Effluent Gross	15						5.92	mg/L					mg/L	Y
KY0045390	Airview WWTF	Hardin	001-1	07/31/2015	Oxygen, dissolved [DO]	00300-1-0	Effluent Gross							NODI **8**						mg/L	N
KY0045390	Airview WWTF	Hardin	001-1	06/30/2015	Oxygen, dissolved [DO]	00300-1-0	Effluent Gross	11						6.21	mg/L					mg/L	Y
KY0045390	Airview WWTF	Hardin	001-1	05/31/2015	Oxygen, dissolved [DO]	00300-1-0	Effluent Gross	69						2.15	mg/L					mg/L	Y
KY0045390	Airview WWTF	Hardin	001-1	04/30/2015	Oxygen, dissolved [DO]	00300-1-0	Effluent Gross	9						6.37	mg/L					mg/L	Y
KY0045390	Airview WWTF	Hardin	001-1	03/31/2015	Oxygen, dissolved [DO]	00300-1-0	Effluent Gross							7.11	mg/L					mg/L	N
KY0045390	Airview WWTF	Hardin	001-1	02/28/2015	Oxygen, dissolved [DO]	00300-1-0	Effluent Gross							7.26	mg/L					mg/L	N
KY0045390	Airview WWTF	Hardin	001-1	01/31/2015	Oxygen, dissolved [DO]	00300-1-0	Effluent Gross	29						4.96	mg/L					mg/L	Y
KY0045390	Airview WWTF	Hardin	001-1	12/31/2014	Oxygen, dissolved [DO]	00300-1-0	Effluent Gross	65						2.45	mg/L					mg/L	Y
KY0045390	Airview WWTF	Hardin	001-1	11/30/2014	Oxygen, dissolved [DO]	00300-1-0	Effluent Gross							NODI **E**						mg/L	N
KY0045390	Airview WWTF	Hardin	001-1	10/31/2014	Oxygen, dissolved [DO]	00300-1-0	Effluent Gross							NODI **E**						mg/L	N
KY0045390	Airview WWTF	Hardin	001-1	09/30/2019	pH	00400-1-0	Effluent Gross							5.8	SU					SU	Y
KY0045390	Airview WWTF	Hardin	001-1	09/30/2019	pH	00400-1-0	Effluent Gross											5.8	SU	SU	N
KY0045390	Airview WWTF	Hardin	001-1	08/31/2019	pH	00400-1-0	Effluent Gross													SU	N
KY0045390	Airview WWTF	Hardin	001-1	07/31/2019	pH	00400-1-0	Effluent Gross													SU	N
KY0045390	Airview WWTF	Hardin	001-1	06/30/2019	pH	00400-1-0	Effluent Gross													SU	N
KY0045390	Airview WWTF	Hardin	001-1	05/31/2019	pH	00400-1-0	Effluent Gross													SU	N
KY0045390	Airview WWTF	Hardin	001-1	04/30/2019	pH	00400-1-0	Effluent Gross													SU	N
KY0045390	Airview WWTF	Hardin	001-1	03/31/2019	pH	00400-1-0	Effluent Gross							6.69	SU					SU	N
KY0045390	Airview WWTF	Hardin	001-1	03/31/2019	pH	00400-1-0	Effluent Gross											7.21	SU	SU	N
KY0045390	Airview WWTF	Hardin	001-1	02/28/2019	pH	00400-1-0	Effluent Gross							6.89	SU					SU	N
KY0045390	Airview WWTF	Hardin	001-1	02/28/2019	pH	00400-1-0	Effluent Gross											7.73	SU	SU	N
KY0045390	Airview WWTF	Hardin	001-1	01/31/2019	pH	00400-1-0	Effluent Gross							6.42	SU					SU	N
KY0045390	Airview WWTF	Hardin	001-1	01/31/2019	pH	00400-1-0	Effluent Gross											7.46	SU	SU	N
KY0045390	Airview WWTF	Hardin	001-1	12/31/2018	pH	00400-1-0	Effluent Gross													SU	N
KY0045390	Airview WWTF	Hardin	001-1	11/30/2018	pH	00400-1-0	Effluent Gross							6.89	SU					SU	N
KY0045390	Airview WWTF	Hardin	001-1	11/30/2018	pH	00400-1-0	Effluent Gross											7.26	SU	SU	N
KY0045390	Airview WWTF	Hardin	001-1	10/31/2018	pH	00400-1-0	Effluent Gross							6.94	SU					SU	N
KY0045390	Airview WWTF	Hardin	001-1	10/31/2018	pH	00400-1-0	Effluent Gross											7.17	SU	SU	N
KY0045390	Airview WWTF	Hardin	001-1	09/30/2018	pH	00400-1-0	Effluent Gross							6.52	SU					SU	N
KY0045390	Airview WWTF	Hardin	001-1	09/30/2018	pH	00400-1-0	Effluent Gross											7.73	SU	SU	N
KY0045390	Airview WWTF	Hardin	001-1	08/31/2018	pH	00400-1-0	Effluent Gross							6.82	SU					SU	N
KY0045390	Airview WWTF	Hardin	001-1	08/31/2018	pH	00400-1-0	Effluent Gross											7.25	SU	SU	N
KY0045390	Airview WWTF	Hardin	001-1	07/31/2018	pH	00400-1-0	Effluent Gross							6.49	SU					SU	N
KY0045390	Airview WWTF	Hardin	001-1	07/31/2018	pH	00400-1-0	Effluent Gross											7.23	SU	SU	N
KY0045390	Airview WWTF	Hardin	001-1	06/30/2018	pH	00400-1-0	Effluent Gross							6.23	SU					SU	N
KY0045390	Airview WWTF	Hardin	001-1	06/30/2018	pH	00400-1-0	Effluent Gross											7.11	SU	SU	N
KY0045390	Airview WWTF	Hardin	001-1	05/31/2018	pH	00400-1-0	Effluent Gross							6.66	SU					SU	N
KY0045390	Airview WWTF	Hardin	001-1	05/31/2018	pH	00400-1-0	Effluent Gross											7.24	SU	SU	N
KY0045390	Airview WWTF	Hardin	001-1	04/30/2018	pH	00400-1-0	Effluent Gross							7.06	SU					SU	N
KY0045390	Airview WWTF	Hardin	001-1	04/30/2018	pH	00400-1-0	Effluent Gross											7.7	SU	SU	N
KY0045390	Airview WWTF	Hardin	001-1	03/31/2018	pH	00400-1-0	Effluent Gross							6.89	SU					SU	N
KY0045390	Airview WWTF	Hardin	001-1	03/31/2018	pH	00400-1-0	Effluent Gross											7.83	SU	SU	N
KY0045390	Airview WWTF	Hardin	001-1	02/28/2018	pH	00400-1-0	Effluent Gross							6.64	SU					SU	N
KY0045390	Airview WWTF	Hardin	001-1	02/28/2018	pH	00400-1-0	Effluent Gross											7.54	SU	SU	N
KY0045390	Airview WWTF	Hardin	001-1	01/31/2018	pH	00400-1-0	Effluent Gross							7.02	SU					SU	N
KY0045390	Airview WWTF	Hardin	001-1	01/31/2018	pH	00400-1-0	Effluent Gross											9.65	SU	SU	Y
KY0045390	Airview WWTF	Hardin	001-1	12/31/2017	pH	00400-1-0	Effluent Gross							6.77	SU					SU	N
KY0045390	Airview WWTF	Hardin	001-1	12/31/2017	pH	00400-1-0	Effluent Gross											7.9	SU	SU	N
KY0045390	Airview WWTF	Hardin	001-1	11/30/2017	pH	00400-1-0	Effluent Gross							7.02	SU					SU	N
KY0045390	Airview WWTF	Hardin	001-1	11/30/2017	pH	00400-1-0	Effluent Gross											8.61	SU	SU	N
KY0045390	Airview WWTF	Hardin	001-1	10/31/2017	pH	00400-1-0	Effluent Gross							6.93	SU					SU	N
KY0045390	Airview WWTF	Hardin	001-1	10/31/2017	pH	00400-1-0	Effluent Gross											7.55	SU	SU	N
KY0045390	Airview WWTF	Hardin	001-1	09/30/2017	pH	00400-1-0	Effluent Gross							7.17	SU					SU	N
KY0045390	Airview WWTF	Hardin	001-1	09/30/2017	pH	00400-1-0	Effluent Gross											7.62	SU	SU	N
KY0045390	Airview WWTF	Hardin	001-1	08/31/2017	pH	00400-1-0	Effluent Gross							6.94	SU					SU	N
KY0045390	Airview WWTF	Hardin	001-1	08/31/2017	pH	00400-1-0	Effluent Gross											8.36	SU	SU	N
KY0045390	Airview WWTF	Hardin	001-1	07/31/2017	pH	00400-1-0	Effluent Gross							6.88	SU					SU	N
KY0045390	Airview WWTF	Hardin	001-1	07/31/2017	pH	00400-1-0	Effluent Gross											7.44	SU	SU	N
KY0045390	Airview WWTF	Hardin	001-1	06/30/2017	pH	00400-1-0	Effluent Gross							6.59	SU					SU	N
KY0045390	Airview WWTF	Hardin	001-1	06/30/2017	pH	00400-1-0	Effluent Gross											6.89	SU	SU	N

KY0045390	Airview WWTF	Hardin	001-1	12/31/2014	pH	00400-1-0	Effluent Gross							7.04	SU					SU	N
KY0045390	Airview WWTF	Hardin	001-1	05/31/2017	pH	00400-1-0	Effluent Gross											8.06	SU	SU	N
KY0045390	Airview WWTF	Hardin	001-1	04/30/2017	pH	00400-1-0	Effluent Gross							7.12	SU					SU	N
KY0045390	Airview WWTF	Hardin	001-1	04/30/2017	pH	00400-1-0	Effluent Gross											7.67	SU	SU	N
KY0045390	Airview WWTF	Hardin	001-1	03/31/2017	pH	00400-1-0	Effluent Gross							7.02	SU					SU	N
KY0045390	Airview WWTF	Hardin	001-1	03/31/2017	pH	00400-1-0	Effluent Gross											8.24	SU	SU	N
KY0045390	Airview WWTF	Hardin	001-1	02/28/2017	pH	00400-1-0	Effluent Gross							6.68	SU					SU	N
KY0045390	Airview WWTF	Hardin	001-1	02/28/2017	pH	00400-1-0	Effluent Gross											8.01	SU	SU	N
KY0045390	Airview WWTF	Hardin	001-1	01/31/2017	pH	00400-1-0	Effluent Gross							6.87	SU					SU	N
KY0045390	Airview WWTF	Hardin	001-1	01/31/2017	pH	00400-1-0	Effluent Gross											8.45	SU	SU	N
KY0045390	Airview WWTF	Hardin	001-1	12/31/2016	pH	00400-1-0	Effluent Gross							6.93	SU					SU	N
KY0045390	Airview WWTF	Hardin	001-1	12/31/2016	pH	00400-1-0	Effluent Gross											7.3	SU	SU	N
KY0045390	Airview WWTF	Hardin	001-1	11/30/2016	pH	00400-1-0	Effluent Gross							6.73	SU					SU	N
KY0045390	Airview WWTF	Hardin	001-1	11/30/2016	pH	00400-1-0	Effluent Gross											7.6	SU	SU	N
KY0045390	Airview WWTF	Hardin	001-1	10/31/2016	pH	00400-1-0	Effluent Gross							6.45	SU					SU	N
KY0045390	Airview WWTF	Hardin	001-1	10/31/2016	pH	00400-1-0	Effluent Gross											7.33	SU	SU	N
KY0045390	Airview WWTF	Hardin	001-1	09/30/2016	pH	00400-1-0	Effluent Gross							6.91	SU					SU	N
KY0045390	Airview WWTF	Hardin	001-1	09/30/2016	pH	00400-1-0	Effluent Gross											7.14	SU	SU	N
KY0045390	Airview WWTF	Hardin	001-1	08/31/2016	pH	00400-1-0	Effluent Gross							6.87	SU					SU	N
KY0045390	Airview WWTF	Hardin	001-1	08/31/2016	pH	00400-1-0	Effluent Gross											7.78	SU	SU	N
KY0045390	Airview WWTF	Hardin	001-1	07/31/2016	pH	00400-1-0	Effluent Gross							6.74	SU					SU	N
KY0045390	Airview WWTF	Hardin	001-1	07/31/2016	pH	00400-1-0	Effluent Gross											7.59	SU	SU	N
KY0045390	Airview WWTF	Hardin	001-1	06/30/2016	pH	00400-1-0	Effluent Gross							6.84	SU					SU	N
KY0045390	Airview WWTF	Hardin	001-1	06/30/2016	pH	00400-1-0	Effluent Gross											7.09	SU	SU	N
KY0045390	Airview WWTF	Hardin	001-1	05/31/2016	pH	00400-1-0	Effluent Gross							6.71	SU					SU	N
KY0045390	Airview WWTF	Hardin	001-1	05/31/2016	pH	00400-1-0	Effluent Gross											7.12	SU	SU	N
KY0045390	Airview WWTF	Hardin	001-1	04/30/2016	pH	00400-1-0	Effluent Gross							6.72	SU					SU	N
KY0045390	Airview WWTF	Hardin	001-1	04/30/2016	pH	00400-1-0	Effluent Gross											7.69	SU	SU	N
KY0045390	Airview WWTF	Hardin	001-1	03/31/2016	pH	00400-1-0	Effluent Gross							7.07	SU					SU	N
KY0045390	Airview WWTF	Hardin	001-1	03/31/2016	pH	00400-1-0	Effluent Gross											7.48	SU	SU	N
KY0045390	Airview WWTF	Hardin	001-1	02/29/2016	pH	00400-1-0	Effluent Gross							6.77	SU					SU	N
KY0045390	Airview WWTF	Hardin	001-1	02/29/2016	pH	00400-1-0	Effluent Gross											7.21	SU	SU	N
KY0045390	Airview WWTF	Hardin	001-1	01/31/2016	pH	00400-1-0	Effluent Gross							6.89	SU					SU	N
KY0045390	Airview WWTF	Hardin	001-1	01/31/2016	pH	00400-1-0	Effluent Gross											7.67	SU	SU	N
KY0045390	Airview WWTF	Hardin	001-1	12/31/2015	pH	00400-1-0	Effluent Gross							6.76	SU					SU	N
KY0045390	Airview WWTF	Hardin	001-1	12/31/2015	pH	00400-1-0	Effluent Gross											7.21	SU	SU	N
KY0045390	Airview WWTF	Hardin	001-1	11/30/2015	pH	00400-1-0	Effluent Gross							6.89	SU					SU	N
KY0045390	Airview WWTF	Hardin	001-1	11/30/2015	pH	00400-1-0	Effluent Gross											7.23	SU	SU	N
KY0045390	Airview WWTF	Hardin	001-1	10/31/2015	pH	00400-1-0	Effluent Gross							6.36	SU					SU	N
KY0045390	Airview WWTF	Hardin	001-1	10/31/2015	pH	00400-1-0	Effluent Gross											6.83	SU	SU	N
KY0045390	Airview WWTF	Hardin	001-1	09/30/2015	pH	00400-1-0	Effluent Gross							6.69	SU					SU	N
KY0045390	Airview WWTF	Hardin	001-1	09/30/2015	pH	00400-1-0	Effluent Gross											7.36	SU	SU	N
KY0045390	Airview WWTF	Hardin	001-1	08/31/2015	pH	00400-1-0	Effluent Gross							6.87	SU					SU	N
KY0045390	Airview WWTF	Hardin	001-1	08/31/2015	pH	00400-1-0	Effluent Gross											7.2	SU	SU	N
KY0045390	Airview WWTF	Hardin	001-1	07/31/2015	pH	00400-1-0	Effluent Gross							NODI **8**				NODI **8**		SU	N
KY0045390	Airview WWTF	Hardin	001-1	06/30/2015	pH	00400-1-0	Effluent Gross							6.85	SU					SU	N
KY0045390	Airview WWTF	Hardin	001-1	06/30/2015	pH	00400-1-0	Effluent Gross											7.51	SU	SU	N
KY0045390	Airview WWTF	Hardin	001-1	05/31/2015	pH	00400-1-0	Effluent Gross							6.91	SU					SU	N
KY0045390	Airview WWTF	Hardin	001-1	05/31/2015	pH	00400-1-0	Effluent Gross											7.8	SU	SU	N
KY0045390	Airview WWTF	Hardin	001-1	04/30/2015	pH	00400-1-0	Effluent Gross							6.52	SU					SU	N
KY0045390	Airview WWTF	Hardin	001-1	04/30/2015	pH	00400-1-0	Effluent Gross											7.48	SU	SU	N
KY0045390	Airview WWTF	Hardin	001-1	03/31/2015	pH	00400-1-0	Effluent Gross							6.89	SU					SU	N
KY0045390	Airview WWTF	Hardin	001-1	03/31/2015	pH	00400-1-0	Effluent Gross											7.16	SU	SU	N
KY0045390	Airview WWTF	Hardin	001-1	02/28/2015	pH	00400-1-0	Effluent Gross							6.92	SU					SU	N
KY0045390	Airview WWTF	Hardin	001-1	02/28/2015	pH	00400-1-0	Effluent Gross											7.62	SU	SU	N
KY0045390	Airview WWTF	Hardin	001-1	01/31/2015	pH	00400-1-0	Effluent Gross							6.92	SU					SU	N
KY0045390	Airview WWTF	Hardin	001-1	01/31/2015	pH	00400-1-0	Effluent Gross											7.47	SU	SU	N
KY0045390	Airview WWTF	Hardin	001-1	12/31/2014	pH	00400-1-0	Effluent Gross							6.88	SU					SU	N
KY0045390	Airview WWTF	Hardin	001-1	11/30/2014	pH	00400-1-0	Effluent Gross							NODI **E**				NODI **E**		SU	N
KY0045390	Airview WWTF	Hardin	001-1	10/31/2014	pH	00400-1-0	Effluent Gross							NODI **E**				NODI **E**		SU	N
KY0045390	Airview WWTF	Hardin	001-1	09/30/2019	Solids, total suspended	00530-1-0	Effluent Gross		8.21	lb/d			lb/d								N
KY0045390	Airview WWTF	Hardin	001-1	09/30/2019	Solids, total suspended	00530-1-0	Effluent Gross				8.21	lb/d	lb/d								N
KY0045390	Airview WWTF	Hardin	001-1	09/30/2019	Solids, total suspended	00530-1-0	Effluent Gross									20	mg/L			mg/L	N
KY0045390	Airview WWTF	Hardin	001-1	09/30/2019	Solids, total suspended	00530-1-0	Effluent Gross											20	mg/L	mg/L	N
KY0045390	Airview WWTF	Hardin	001-1	08/31/2019	Solids, total suspended	00530-1-0	Effluent Gross						lb/d								N
KY0045390	Airview WWTF	Hardin	001-1	08/31/2019	Solids, total suspended	00530-1-0	Effluent Gross													mg/L	N
KY0045390	Airview WWTF	Hardin	001-1	07/31/2019	Solids, total suspended	00530-1-0	Effluent Gross						lb/d								N
KY0045390	Airview WWTF	Hardin	001-1	07/31/2019	Solids, total suspended	00530-1-0	Effluent Gross													mg/L	N
KY0045390	Airview WWTF	Hardin	001-1	06/30/2019	Solids, total suspended	00530-1-0	Effluent Gross						lb/d								N
KY0045390	Airview WWTF	Hardin	001-1	06/30/2019	Solids, total suspended	00530-1-0	Effluent Gross													mg/L	N
KY0045390	Airview WWTF	Hardin	001-1	05/31/2019	Solids, total suspended	00530-1-0	Effluent Gross						lb/d								N
KY0045390	Airview WWTF	Hardin	001-1	05/31/2019	Solids, total suspended	00530-1-0	Effluent Gross													mg/L	N
KY0045390	Airview WWTF	Hardin	001-1	04/30/2019	Solids, total suspended	00530-1-0	Effluent Gross						lb/d								N
KY0045390	Airview WWTF	Hardin	001-1	04/30/2019	Solids, total suspended	00530-1-0	Effluent Gross													mg/L	N
KY0045390	Airview WWTF	Hardin	001-1	03/31/2019	Solids, total suspended	00530-1-0	Effluent Gross		5	lb/d			lb/d								N
KY0045390	Airview WWTF	Hardin	001-1	03/31/2019	Solids, total suspended	00530-1-0	Effluent Gross				9	lb/d	lb/d								N
KY0045390	Airview WWTF	Hardin	001-1	03/31/2019	Solids, total suspended	00530-1-0	Effluent Gross	27								38	mg/L			mg/L	Y
KY0045390	Airview WWTF	Hardin	001-1	03/31/2019	Solids, total suspended	00530-1-0	Effluent Gross	36										61	mg/L	mg/L	Y
KY0045390	Airview WWTF	Hardin	001-1	02/28/2019	Solids, total suspended	00530-1-0	Effluent Gross		6	lb/d			lb/d								N
KY0045390	Airview WWTF	Hardin	001-1	02/28/2019	Solids, total suspended	00530-1-0	Effluent Gross				12	lb/d	lb/d								N
KY0045390	Airview WWTF	Hardin	001-1	02/28/2019	Solids, total suspended	00530-1-0	Effluent Gross									22	mg/L			mg/L	N
KY0045390	Airview WWTF	Hardin	001-1	02/28/2019	Solids, total suspended	00530-1-0	Effluent Gross											42	mg/L	mg/L	N
KY0045390	Airview WWTF	Hardin	001-1	01/31/2019	Solids, total suspended	00530-1-0	Effluent Gross		8	lb/d			lb/d								N
KY0045390	Airview WWTF	Hardin	001-1	01/31/2019	Solids, total suspended	00530-1-0	Effluent Gross				14	lb/d	lb/d								N
KY0045390	Airview WWTF	Hardin	001-1	01/31/2019	Solids, total suspended	00530-1-0	Effluent Gross									17	mg/L			mg/L	N
KY0045390	Airview WWTF	Hardin	001-1	01/31/2019	Solids, total suspended	00530-1-0	Effluent Gross											30	mg/L	mg/L	N
KY0045390	Airview WWTF	Hardin	001-1	12/31/2018	Solids, total suspended	00530-1-0	Effluent Gross						lb/d								N
KY0045390	Airview WWTF	Hardin	001-1	12/31/2018	Solids, total suspended	00530-1-0	Effluent Gross													mg/L	N
KY0045390	Airview WWTF	Hardin	001-1	11/30/2018	Solids, total suspended	00530-1-0	Effluent Gross		5	lb/d			lb/d								N
KY0045390	Airview WWTF	Hardin	001-1	11/30/2018	Solids, total suspended	00530-1-0	Effluent Gross				9	lb/d	lb/d								N
KY0045390	Airview WWTF	Hardin	001-1	11/30/2018	Solids, total suspended	00530-1-0	Effluent Gross									24	mg/L			mg/L	N
KY0045390	Airview WWTF	Hardin	001-1	11/30/2018	Solids, total suspended	00530-1-0	Effluent Gross											44	mg/L	mg/L	N
KY0045390	Airview WWTF	Hardin	001-1	10/31/2018	Solids, total suspended	00530-1-0	Effluent Gross		< 3	lb/d			lb/d								N
KY0045390	Airview WWTF	Hardin	001-1	10/31/2018	Solids, total suspended	00530-1-0	Effluent Gross				5	lb/d	lb/d								N
KY0045390	Airview WWTF	Hardin	001-1	10/31/2018	Solids, total suspended	00530-1-0	Effluent Gross									< 11	mg/L			mg/L	N
KY0045390	Airview WWTF	Hardin	001-1	10/31/2018	Solids, total suspended	00530-1-0	Effluent Gross											23	mg/L	mg/L	N
KY0045390	Airview WWTF	Hardin	001-1	09/30/2018	Solids, total suspended	00530-1-0	Effluent Gross		5	lb/d			lb/d								N
KY0045390	Airview WWTF	Hardin	001-1	09/30/2018	Solids, total suspended	00530-1-0	Effluent Gross				8	lb/d	lb/d								N
KY0045390	Airview WWTF	Hardin	001-1	09/30/2018	Solids, total suspended	00530-1-0	Effluent Gross									21	mg/L			mg/L	N
KY0045390	Airview WWTF	Hardin	001-1	09/30/2018	Solids, total suspended	00530-1-0	Effluent Gross											38	mg/L	mg/L	N
KY0045390	Airview WWTF	Hardin	001-1	08/31/2018	Solids, total suspended	00530-1-0	Effluent Gross		12	lb/d			lb/d								N
KY0045390	Airview WWTF	Hardin	001-1	08/31/2018	Solids, total suspended	00530-1-0	Effluent Gross	35			27	lb/d	lb/d								Y
KY0045390	Airview WWTF	Hardin	001-1	08/31/2018	Solids, total suspended	00530-1-0	Effluent Gross	90								57	mg/L			mg/L	Y
KY0045390	Airview WWTF	Hardin	001-1	08/31/2018	Solids, total suspended	00530-1-0	Effluent Gross	182										127	mg/L	mg/L	Y
KY0045390	Airview WWTF	Hardin	001-1	07/31/2018	Solids, total suspended	00530-1-0	Effluent Gross		4	lb/d			lb/d								N
KY0045390	Airview WWTF	Hardin	001-1	07/31/2018	Solids, total suspended	00530-1-0	Effluent Gross				8	lb/d	lb/d								N
KY0045390	Airview WWTF	Hardin	001-1	07/31/2018	Solids, total suspended	00530-1-0	Effluent Gross									19	mg/L			mg/L	N
KY0045390	Airview WWTF	Hardin	001-1	07/31/2018	Solids, total suspended	00530-1-0	Effluent Gross											40	mg/L	mg/L	N
KY0045390	Airview WWTF	Hardin	001-1	06/30/2018	Solids, total suspended	00530-1-0	Effluent Gross	248	48	lb/d			lb/d								Y
KY0045390	Airview WWTF	Hardin	001-1	06/30/2018	Solids, total suspended	00530-1-0	Effluent Gross	797			180	lb/d	lb/d								Y
KY0045390	Airview WWTF	Hardin	001-1	06/30/2018	Solids, total suspended	00530-1-0	Effluent Gross	23								37	mg/L			mg/L	Y
KY0045390	Airview WWTF	Hardin	001-1	06/30/2018	Solids, total suspended	00530-1-0	Effluent Gross	87										84	mg/L	mg/L	Y
KY0045390	Airview WWTF	Hardin	001-1	05/31/2018	Solids, total suspended	00530-1-0	Effluent Gross		13	lb/d			lb/d								N

KY0045390	Airview WWTF	Hardin	001-1	05/31/2018	Solids, total suspended	00530-1-0	Effluent Gross	124			45	lb/d	lb/d								Y
KY0045390	Airview WWTF	Hardin	001-1	05/31/2018	Solids, total suspended	00530-1-0	Effluent Gross	103								61	mg/L			mg/L	Y
KY0045390	Airview WWTF	Hardin	001-1	05/31/2018	Solids, total suspended	00530-1-0	Effluent Gross	382										217	mg/L	mg/L	Y
KY0045390	Airview WWTF	Hardin	001-1	04/30/2018	Solids, total suspended	00530-1-0	Effluent Gross		6	lb/d			lb/d								N
KY0045390	Airview WWTF	Hardin	001-1	04/30/2018	Solids, total suspended	00530-1-0	Effluent Gross				10	lb/d	lb/d								N
KY0045390	Airview WWTF	Hardin	001-1	04/30/2018	Solids, total suspended	00530-1-0	Effluent Gross									28	mg/L			mg/L	N
KY0045390	Airview WWTF	Hardin	001-1	04/30/2018	Solids, total suspended	00530-1-0	Effluent Gross	7										48	mg/L	mg/L	Y
KY0045390	Airview WWTF	Hardin	001-1	03/31/2018	Solids, total suspended	00530-1-0	Effluent Gross		4	lb/d			lb/d								N
KY0045390	Airview WWTF	Hardin	001-1	03/31/2018	Solids, total suspended	00530-1-0	Effluent Gross				6	lb/d	lb/d								N
KY0045390	Airview WWTF	Hardin	001-1	03/31/2018	Solids, total suspended	00530-1-0	Effluent Gross									19	mg/L			mg/L	N
KY0045390	Airview WWTF	Hardin	001-1	03/31/2018	Solids, total suspended	00530-1-0	Effluent Gross											28	mg/L	mg/L	N
KY0045390	Airview WWTF	Hardin	001-1	02/28/2018	Solids, total suspended	00530-1-0	Effluent Gross	190	40	lb/d			lb/d								Y
KY0045390	Airview WWTF	Hardin	001-1	02/28/2018	Solids, total suspended	00530-1-0	Effluent Gross	598			140	lb/d	lb/d								Y
KY0045390	Airview WWTF	Hardin	001-1	02/28/2018	Solids, total suspended	00530-1-0	Effluent Gross	547								194	mg/L			mg/L	Y
KY0045390	Airview WWTF	Hardin	001-1	02/28/2018	Solids, total suspended	00530-1-0	Effluent Gross	1431										689	mg/L	mg/L	Y
KY0045390	Airview WWTF	Hardin	001-1	01/31/2018	Solids, total suspended	00530-1-0	Effluent Gross		< 4	lb/d			lb/d								N
KY0045390	Airview WWTF	Hardin	001-1	01/31/2018	Solids, total suspended	00530-1-0	Effluent Gross				< 11	lb/d	lb/d								N
KY0045390	Airview WWTF	Hardin	001-1	01/31/2018	Solids, total suspended	00530-1-0	Effluent Gross									< 8	mg/L			mg/L	N
KY0045390	Airview WWTF	Hardin	001-1	01/31/2018	Solids, total suspended	00530-1-0	Effluent Gross											9	mg/L	mg/L	N
KY0045390	Airview WWTF	Hardin	001-1	12/31/2017	Solids, total suspended	00530-1-0	Effluent Gross		< 2	lb/d			lb/d								N
KY0045390	Airview WWTF	Hardin	001-1	12/31/2017	Solids, total suspended	00530-1-0	Effluent Gross				1	lb/d	lb/d								N
KY0045390	Airview WWTF	Hardin	001-1	12/31/2017	Solids, total suspended	00530-1-0	Effluent Gross									< 6	mg/L			mg/L	N
KY0045390	Airview WWTF	Hardin	001-1	12/31/2017	Solids, total suspended	00530-1-0	Effluent Gross											6	mg/L	mg/L	N
KY0045390	Airview WWTF	Hardin	001-1	11/30/2017	Solids, total suspended	00530-1-0	Effluent Gross		< 5	lb/d			lb/d								N
KY0045390	Airview WWTF	Hardin	001-1	11/30/2017	Solids, total suspended	00530-1-0	Effluent Gross				14	lb/d	lb/d								N
KY0045390	Airview WWTF	Hardin	001-1	11/30/2017	Solids, total suspended	00530-1-0	Effluent Gross									< 20	mg/L			mg/L	N
KY0045390	Airview WWTF	Hardin	001-1	11/30/2017	Solids, total suspended	00530-1-0	Effluent Gross	49										67	mg/L	mg/L	Y
KY0045390	Airview WWTF	Hardin	001-1	10/31/2017	Solids, total suspended	00530-1-0	Effluent Gross		13	lb/d			lb/d								N
KY0045390	Airview WWTF	Hardin	001-1	10/31/2017	Solids, total suspended	00530-1-0	Effluent Gross	94			39	lb/d	lb/d								Y
KY0045390	Airview WWTF	Hardin	001-1	10/31/2017	Solids, total suspended	00530-1-0	Effluent Gross	123								67	mg/L			mg/L	Y
KY0045390	Airview WWTF	Hardin	001-1	10/31/2017	Solids, total suspended	00530-1-0	Effluent Gross	369										211	mg/L	mg/L	Y
KY0045390	Airview WWTF	Hardin	001-1	09/30/2017	Solids, total suspended	00530-1-0	Effluent Gross	9	< 15	lb/d			lb/d								Y
KY0045390	Airview WWTF	Hardin	001-1	09/30/2017	Solids, total suspended	00530-1-0	Effluent Gross	69			34	lb/d	lb/d								Y
KY0045390	Airview WWTF	Hardin	001-1	09/30/2017	Solids, total suspended	00530-1-0	Effluent Gross	120								< 66	mg/L			mg/L	Y
KY0045390	Airview WWTF	Hardin	001-1	09/30/2017	Solids, total suspended	00530-1-0	Effluent Gross	247										156	mg/L	mg/L	Y
KY0045390	Airview WWTF	Hardin	001-1	08/31/2017	Solids, total suspended	00530-1-0	Effluent Gross		5	lb/d			lb/d								N
KY0045390	Airview WWTF	Hardin	001-1	08/31/2017	Solids, total suspended	00530-1-0	Effluent Gross				15	lb/d	lb/d								N
KY0045390	Airview WWTF	Hardin	001-1	08/31/2017	Solids, total suspended	00530-1-0	Effluent Gross									24	mg/L			mg/L	N
KY0045390	Airview WWTF	Hardin	001-1	08/31/2017	Solids, total suspended	00530-1-0	Effluent Gross	60										72	mg/L	mg/L	Y
KY0045390	Airview WWTF	Hardin	001-1	07/31/2017	Solids, total suspended	00530-1-0	Effluent Gross		3	lb/d			lb/d								N
KY0045390	Airview WWTF	Hardin	001-1	07/31/2017	Solids, total suspended	00530-1-0	Effluent Gross				3	lb/d	lb/d								N
KY0045390	Airview WWTF	Hardin	001-1	07/31/2017	Solids, total suspended	00530-1-0	Effluent Gross									12	mg/L			mg/L	N
KY0045390	Airview WWTF	Hardin	001-1	07/31/2017	Solids, total suspended	00530-1-0	Effluent Gross											15	mg/L	mg/L	N
KY0045390	Airview WWTF	Hardin	001-1	06/30/2017	Solids, total suspended	00530-1-0	Effluent Gross		< 4	lb/d			lb/d								N
KY0045390	Airview WWTF	Hardin	001-1	06/30/2017	Solids, total suspended	00530-1-0	Effluent Gross				6	lb/d	lb/d								N
KY0045390	Airview WWTF	Hardin	001-1	06/30/2017	Solids, total suspended	00530-1-0	Effluent Gross									< 15	mg/L			mg/L	N
KY0045390	Airview WWTF	Hardin	001-1	06/30/2017	Solids, total suspended	00530-1-0	Effluent Gross											27	mg/L	mg/L	N
KY0045390	Airview WWTF	Hardin	001-1	05/31/2017	Solids, total suspended	00530-1-0	Effluent Gross		< 3	lb/d			lb/d								N
KY0045390	Airview WWTF	Hardin	001-1	05/31/2017	Solids, total suspended	00530-1-0	Effluent Gross				4	lb/d	lb/d								N
KY0045390	Airview WWTF	Hardin	001-1	05/31/2017	Solids, total suspended	00530-1-0	Effluent Gross									< 11	mg/L			mg/L	N
KY0045390	Airview WWTF	Hardin	001-1	05/31/2017	Solids, total suspended	00530-1-0	Effluent Gross											16	mg/L	mg/L	N
KY0045390	Airview WWTF	Hardin	001-1	04/30/2017	Solids, total suspended	00530-1-0	Effluent Gross		< 4	lb/d			lb/d								N
KY0045390	Airview WWTF	Hardin	001-1	04/30/2017	Solids, total suspended	00530-1-0	Effluent Gross				10	lb/d	lb/d								N
KY0045390	Airview WWTF	Hardin	001-1	04/30/2017	Solids, total suspended	00530-1-0	Effluent Gross									< 13	mg/L			mg/L	N
KY0045390	Airview WWTF	Hardin	001-1	04/30/2017	Solids, total suspended	00530-1-0	Effluent Gross											23	mg/L	mg/L	N
KY0045390	Airview WWTF	Hardin	001-1	03/31/2017	Solids, total suspended	00530-1-0	Effluent Gross		< 2	lb/d			lb/d								N
KY0045390	Airview WWTF	Hardin	001-1	03/31/2017	Solids, total suspended	00530-1-0	Effluent Gross				< 3	lb/d	lb/d								N
KY0045390	Airview WWTF	Hardin	001-1	03/31/2017	Solids, total suspended	00530-1-0	Effluent Gross									< 6	mg/L			mg/L	N
KY0045390	Airview WWTF	Hardin	001-1	02/28/2017	Solids, total suspended	00530-1-0	Effluent Gross		2	lb/d			lb/d					< 5	mg/L	mg/L	N
KY0045390	Airview WWTF	Hardin	001-1	02/28/2017	Solids, total suspended	00530-1-0	Effluent Gross				3	lb/d	lb/d								N
KY0045390	Airview WWTF	Hardin	001-1	02/28/2017	Solids, total suspended	00530-1-0	Effluent Gross									14	mg/L			mg/L	N
KY0045390	Airview WWTF	Hardin	001-1	02/28/2017	Solids, total suspended	00530-1-0	Effluent Gross											21	mg/L	mg/L	N
KY0045390	Airview WWTF	Hardin	001-1	01/31/2017	Solids, total suspended	00530-1-0	Effluent Gross		2	lb/d			lb/d								N
KY0045390	Airview WWTF	Hardin	001-1	01/31/2017	Solids, total suspended	00530-1-0	Effluent Gross				3	lb/d	lb/d								N
KY0045390	Airview WWTF	Hardin	001-1	01/31/2017	Solids, total suspended	00530-1-0	Effluent Gross	47								44	mg/L			mg/L	Y
KY0045390	Airview WWTF	Hardin	001-1	01/31/2017	Solids, total suspended	00530-1-0	Effluent Gross	158										116	mg/L	mg/L	Y
KY0045390	Airview WWTF	Hardin	001-1	12/31/2016	Solids, total suspended	00530-1-0	Effluent Gross		5	lb/d			lb/d								N
KY0045390	Airview WWTF	Hardin	001-1	12/31/2016	Solids, total suspended	00530-1-0	Effluent Gross				11	lb/d	lb/d								N
KY0045390	Airview WWTF	Hardin	001-1	12/31/2016	Solids, total suspended	00530-1-0	Effluent Gross									12	mg/L			mg/L	N
KY0045390	Airview WWTF	Hardin	001-1	12/31/2016	Solids, total suspended	00530-1-0	Effluent Gross											22	mg/L	mg/L	N
KY0045390	Airview WWTF	Hardin	001-1	11/30/2016	Solids, total suspended	00530-1-0	Effluent Gross		< 2	lb/d			lb/d								N
KY0045390	Airview WWTF	Hardin	001-1	11/30/2016	Solids, total suspended	00530-1-0	Effluent Gross				2	lb/d	lb/d								N
KY0045390	Airview WWTF	Hardin	001-1	11/30/2016	Solids, total suspended	00530-1-0	Effluent Gross									< 18	mg/L			mg/L	N
KY0045390	Airview WWTF	Hardin	001-1	11/30/2016	Solids, total suspended	00530-1-0	Effluent Gross	36										61	mg/L	mg/L	Y
KY0045390	Airview WWTF	Hardin	001-1	10/31/2016	Solids, total suspended	00530-1-0	Effluent Gross		7	lb/d			lb/d								N
KY0045390	Airview WWTF	Hardin	001-1	10/31/2016	Solids, total suspended	00530-1-0	Effluent Gross				7	lb/d	lb/d								N
KY0045390	Airview WWTF	Hardin	001-1	10/31/2016	Solids, total suspended	00530-1-0	Effluent Gross	40								42	mg/L			mg/L	Y
KY0045390	Airview WWTF	Hardin	001-1	10/31/2016	Solids, total suspended	00530-1-0	Effluent Gross											42	mg/L	mg/L	N
KY0045390	Airview WWTF	Hardin	001-1	09/30/2016	Solids, total suspended	00530-1-0	Effluent Gross		< 10	lb/d			lb/d								N
KY0045390	Airview WWTF	Hardin	001-1	09/30/2016	Solids, total suspended	00530-1-0	Effluent Gross				14	lb/d	lb/d								N
KY0045390	Airview WWTF	Hardin	001-1	09/30/2016	Solids, total suspended	00530-1-0	Effluent Gross	27								< 38	mg/L			mg/L	Y
KY0045390	Airview WWTF	Hardin	001-1	09/30/2016	Solids, total suspended	00530-1-0	Effluent Gross	62										73	mg/L	mg/L	Y
KY0045390	Airview WWTF	Hardin	001-1	08/31/2016	Solids, total suspended	00530-1-0	Effluent Gross		5	lb/d			lb/d								N
KY0045390	Airview WWTF	Hardin	001-1	08/31/2016	Solids, total suspended	00530-1-0	Effluent Gross				8	lb/d	lb/d								N
KY0045390	Airview WWTF	Hardin	001-1	08/31/2016	Solids, total suspended	00530-1-0	Effluent Gross									26	mg/L			mg/L	N
KY0045390	Airview WWTF	Hardin	001-1	08/31/2016	Solids, total suspended	00530-1-0	Effluent Gross											39	mg/L	mg/L	N
KY0045390	Airview WWTF	Hardin	001-1	07/31/2016	Solids, total suspended	00530-1-0	Effluent Gross	23	17	lb/d			lb/d								Y
KY0045390	Airview WWTF	Hardin	001-1	07/31/2016	Solids, total suspended	00530-1-0	Effluent Gross	124			45	lb/d	lb/d								Y
KY0045390	Airview WWTF	Hardin	001-1	07/31/2016	Solids, total suspended	00530-1-0	Effluent Gross	143								73	mg/L			mg/L	Y
KY0045390	Airview WWTF	Hardin	001-1	07/31/2016	Solids, total suspended	00530-1-0	Effluent Gross	324										191	mg/L	mg/L	Y
KY0045390	Airview WWTF	Hardin	001-1	06/30/2016	Solids, total suspended	00530-1-0	Effluent Gross	9	15	lb/d			lb/d								Y
KY0045390	Airview WWTF	Hardin	001-1	06/30/2016	Solids, total suspended	00530-1-0	Effluent Gross	74			35	lb/d	lb/d								Y
KY0045390	Airview WWTF	Hardin	001-1	06/30/2016	Solids, total suspended	00530-1-0	Effluent Gross	137								71	mg/L			mg/L	Y
KY0045390	Airview WWTF	Hardin	001-1	06/30/2016	Solids, total suspended	00530-1-0	Effluent Gross	287										174	mg/L	mg/L	Y
KY0045390	Airview WWTF	Hardin	001-1	05/31/2016	Solids, total suspended	00530-1-0	Effluent Gross		5	lb/d			lb/d								N
KY0045390	Airview WWTF	Hardin	001-1	05/31/2016	Solids, total suspended	00530-1-0	Effluent Gross				6	lb/d	lb/d								N
KY0045390	Airview WWTF	Hardin	001-1	05/31/2016	Solids, total suspended	00530-1-0	Effluent Gross									24	mg/L			mg/L	N
KY0045390	Airview WWTF	Hardin	001-1	05/31/2016	Solids, total suspended	00530-1-0	Effluent Gross											28	mg/L	mg/L	N
KY0045390	Airview WWTF	Hardin	001-1	04/30/2016	Solids, total suspended	00530-1-0	Effluent Gross		5	lb/d			lb/d								N
KY0045390	Airview WWTF	Hardin	001-1	04/30/2016	Solids, total suspended	00530-1-0	Effluent Gross				15	lb/d	lb/d								N
KY0045390	Airview WWTF	Hardin	001-1	04/30/2016	Solids, total suspended	00530-1-0	Effluent Gross									22	mg/L			mg/L	N
KY0045390	Airview WWTF	Hardin	001-1	04/30/2016	Solids, total suspended	00530-1-0	Effluent Gross	27										57	mg/L	mg/L	Y
KY0045390	Airview WWTF	Hardin	001-1	03/31/2016	Solids, total suspended	00530-1-0	Effluent Gross		5	lb/d			lb/d								N
KY0045390	Airview WWTF	Hardin	001-1	03/31/2016	Solids, total suspended	00530-1-0	Effluent Gross				11	lb/d	lb/d								N
KY0045390	Airview WWTF	Hardin	001-1	03/31/2016	Solids, total suspended	00530-1-0	Effluent Gross									21	mg/L			mg/L	N
KY0045390	Airview WWTF	Hardin	001-1	03/31/2016	Solids, total suspended	00530-1-0	Effluent Gross											45	mg/L	mg/L	N
KY0045390	Airview WWTF	Hardin	001-1	02/29/2016	Solids, total suspended	00530-1-0	Effluent Gross		< 3	lb/d			lb/d								N
KY0045390	Airview WWTF	Hardin	001-1	02/29/2016	Solids, total suspended	00530-1-0	Effluent Gross				4	lb/d	lb/d								N
KY0045390	Airview WWTF	Hardin	001-1	02/29/2016	Solids, total suspended	00530-1-0	Effluent Gross									< 12	mg/L			mg/L	N
KY0045390	Airview WWTF	Hardin	001-1	02/29/2016	Solids, total suspended	00530-1-0	Effluent Gross											19	mg/L	mg/L	N
KY0045390	Airview WWTF	Hardin	001-1	01/31/2016	Solids, total suspended	00530-1-0	Effluent Gross		< 2	lb/d			lb/d								N
KY0045390	Airview WWTF	Hardin	001-1	01/31/2016	Solids, total suspended	00530-1-0	Effluent Gross				3	lb/d	lb/d								N
KY0045390	Airview WWTF	Hardin	001-1	01/31/2016	Solids, total suspended	00530-1-0	Effluent Gross									< 9	mg/L			mg/L	N

KY0045390	Airview WWTF	Hardin	001-1	01/31/2016	Solids, total suspended	00530-1-0	Effluent Gross											15	mg/L	mg/L	N
KY0045390	Airview WWTF	Hardin	001-1	12/31/2015	Solids, total suspended	00530-1-0	Effluent Gross		5	lb/d			lb/d								N
KY0045390	Airview WWTF	Hardin	001-1	12/31/2015	Solids, total suspended	00530-1-0	Effluent Gross				11	lb/d	lb/d								N
KY0045390	Airview WWTF	Hardin	001-1	12/31/2015	Solids, total suspended	00530-1-0	Effluent Gross									26	mg/L			mg/L	N
KY0045390	Airview WWTF	Hardin	001-1	12/31/2015	Solids, total suspended	00530-1-0	Effluent Gross	40										63	mg/L	mg/L	Y
KY0045390	Airview WWTF	Hardin	001-1	11/30/2015	Solids, total suspended	00530-1-0	Effluent Gross		3	lb/d			lb/d								N
KY0045390	Airview WWTF	Hardin	001-1	11/30/2015	Solids, total suspended	00530-1-0	Effluent Gross				5	lb/d	lb/d								N
KY0045390	Airview WWTF	Hardin	001-1	11/30/2015	Solids, total suspended	00530-1-0	Effluent Gross									14	mg/L			mg/L	N
KY0045390	Airview WWTF	Hardin	001-1	11/30/2015	Solids, total suspended	00530-1-0	Effluent Gross											26	mg/L	mg/L	N
KY0045390	Airview WWTF	Hardin	001-1	10/31/2015	Solids, total suspended	00530-1-0	Effluent Gross	103	28	lb/d			lb/d								Y
KY0045390	Airview WWTF	Hardin	001-1	10/31/2015	Solids, total suspended	00530-1-0	Effluent Gross	304			81	lb/d	lb/d								Y
KY0045390	Airview WWTF	Hardin	001-1	10/31/2015	Solids, total suspended	00530-1-0	Effluent Gross	347								134	mg/L			mg/L	Y
KY0045390	Airview WWTF	Hardin	001-1	10/31/2015	Solids, total suspended	00530-1-0	Effluent Gross	836										421	mg/L	mg/L	Y
KY0045390	Airview WWTF	Hardin	001-1	09/30/2015	Solids, total suspended	00530-1-0	Effluent Gross	81	25	lb/d			lb/d								Y
KY0045390	Airview WWTF	Hardin	001-1	09/30/2015	Solids, total suspended	00530-1-0	Effluent Gross	239			68	lb/d	lb/d								Y
KY0045390	Airview WWTF	Hardin	001-1	09/30/2015	Solids, total suspended	00530-1-0	Effluent Gross	103								61	mg/L			mg/L	Y
KY0045390	Airview WWTF	Hardin	001-1	09/30/2015	Solids, total suspended	00530-1-0	Effluent Gross	76										79	mg/L	mg/L	Y
KY0045390	Airview WWTF	Hardin	001-1	08/31/2015	Solids, total suspended	00530-1-0	Effluent Gross		10	lb/d			lb/d								N
KY0045390	Airview WWTF	Hardin	001-1	08/31/2015	Solids, total suspended	00530-1-0	Effluent Gross	20			24	lb/d	lb/d								Y
KY0045390	Airview WWTF	Hardin	001-1	08/31/2015	Solids, total suspended	00530-1-0	Effluent Gross	67								50	mg/L			mg/L	Y
KY0045390	Airview WWTF	Hardin	001-1	08/31/2015	Solids, total suspended	00530-1-0	Effluent Gross	133										105	mg/L	mg/L	Y
KY0045390	Airview WWTF	Hardin	001-1	07/31/2015	Solids, total suspended	00530-1-0	Effluent Gross		NODI **8**		NODI **8**		lb/d								N
KY0045390	Airview WWTF	Hardin	001-1	07/31/2015	Solids, total suspended	00530-1-0	Effluent Gross									NODI **8**		NODI **8**		mg/L	N
KY0045390	Airview WWTF	Hardin	001-1	06/30/2015	Solids, total suspended	00530-1-0	Effluent Gross		9	lb/d			lb/d								N
KY0045390	Airview WWTF	Hardin	001-1	06/30/2015	Solids, total suspended	00530-1-0	Effluent Gross				20	lb/d	lb/d								N
KY0045390	Airview WWTF	Hardin	001-1	06/30/2015	Solids, total suspended	00530-1-0	Effluent Gross	57								47	mg/L			mg/L	Y
KY0045390	Airview WWTF	Hardin	001-1	06/30/2015	Solids, total suspended	00530-1-0	Effluent Gross	142										109	mg/L	mg/L	Y
KY0045390	Airview WWTF	Hardin	001-1	05/31/2015	Solids, total suspended	00530-1-0	Effluent Gross		8	lb/d			lb/d								N
KY0045390	Airview WWTF	Hardin	001-1	05/31/2015	Solids, total suspended	00530-1-0	Effluent Gross				12	lb/d	lb/d								N
KY0045390	Airview WWTF	Hardin	001-1	05/31/2015	Solids, total suspended	00530-1-0	Effluent Gross	47								44	mg/L			mg/L	Y
KY0045390	Airview WWTF	Hardin	001-1	05/31/2015	Solids, total suspended	00530-1-0	Effluent Gross	33										60	mg/L	mg/L	Y
KY0045390	Airview WWTF	Hardin	001-1	04/30/2015	Solids, total suspended	00530-1-0	Effluent Gross		6	lb/d			lb/d								N
KY0045390	Airview WWTF	Hardin	001-1	04/30/2015	Solids, total suspended	00530-1-0	Effluent Gross				6	lb/d	lb/d								N
KY0045390	Airview WWTF	Hardin	001-1	04/30/2015	Solids, total suspended	00530-1-0	Effluent Gross									30	mg/L			mg/L	N
KY0045390	Airview WWTF	Hardin	001-1	04/30/2015	Solids, total suspended	00530-1-0	Effluent Gross											30	mg/L	mg/L	N
KY0045390	Airview WWTF	Hardin	001-1	03/31/2015	Solids, total suspended	00530-1-0	Effluent Gross		5	lb/d			lb/d								N
KY0045390	Airview WWTF	Hardin	001-1	03/31/2015	Solids, total suspended	00530-1-0	Effluent Gross				11	lb/d	lb/d								N
KY0045390	Airview WWTF	Hardin	001-1	03/31/2015	Solids, total suspended	00530-1-0	Effluent Gross	20								36	mg/L			mg/L	Y
KY0045390	Airview WWTF	Hardin	001-1	03/31/2015	Solids, total suspended	00530-1-0	Effluent Gross	67										75	mg/L	mg/L	Y
KY0045390	Airview WWTF	Hardin	001-1	02/28/2015	Solids, total suspended	00530-1-0	Effluent Gross		9	lb/d			lb/d								N
KY0045390	Airview WWTF	Hardin	001-1	02/28/2015	Solids, total suspended	00530-1-0	Effluent Gross				12	lb/d	lb/d								N
KY0045390	Airview WWTF	Hardin	001-1	02/28/2015	Solids, total suspended	00530-1-0	Effluent Gross	40								42	mg/L			mg/L	Y
KY0045390	Airview WWTF	Hardin	001-1	02/28/2015	Solids, total suspended	00530-1-0	Effluent Gross	31										59	mg/L	mg/L	Y
KY0045390	Airview WWTF	Hardin	001-1	01/31/2015	Solids, total suspended	00530-1-0	Effluent Gross		11	lb/d			lb/d								N
KY0045390	Airview WWTF	Hardin	001-1	01/31/2015	Solids, total suspended	00530-1-0	Effluent Gross				20	lb/d	lb/d								N
KY0045390	Airview WWTF	Hardin	001-1	01/31/2015	Solids, total suspended	00530-1-0	Effluent Gross									30	mg/L			mg/L	N
KY0045390	Airview WWTF	Hardin	001-1	01/31/2015	Solids, total suspended	00530-1-0	Effluent Gross											43	mg/L	mg/L	N
KY0045390	Airview WWTF	Hardin	001-1	12/31/2014	Solids, total suspended	00530-1-0	Effluent Gross	1	14	lb/d			lb/d								Y
KY0045390	Airview WWTF	Hardin	001-1	12/31/2014	Solids, total suspended	00530-1-0	Effluent Gross				18	lb/d	lb/d								N
KY0045390	Airview WWTF	Hardin	001-1	12/31/2014	Solids, total suspended	00530-1-0	Effluent Gross	130								69	mg/L			mg/L	Y
KY0045390	Airview WWTF	Hardin	001-1	12/31/2014	Solids, total suspended	00530-1-0	Effluent Gross	87										84	mg/L	mg/L	Y
KY0045390	Airview WWTF	Hardin	001-1	11/30/2014	Solids, total suspended	00530-1-0	Effluent Gross		NODI **E**		NODI **E**		lb/d								N
KY0045390	Airview WWTF	Hardin	001-1	11/30/2014	Solids, total suspended	00530-1-0	Effluent Gross									NODI **E**		NODI **E**		mg/L	N
KY0045390	Airview WWTF	Hardin	001-1	10/31/2014	Solids, total suspended	00530-1-0	Effluent Gross		NODI **E**		NODI **E**		lb/d								N
KY0045390	Airview WWTF	Hardin	001-1	10/31/2014	Solids, total suspended	00530-1-0	Effluent Gross									NODI **E**		NODI **E**		mg/L	N
KY0045390	Airview WWTF	Hardin	001-1	09/30/2019	Nitrogen, ammonia total [as	00610-1-1	Effluent Gross		0.369	lb/d			lb/d								N
KY0045390	Airview WWTF	Hardin	001-1	09/30/2019	Nitrogen, ammonia total [as	00610-1-1	Effluent Gross				0.369	lb/d	lb/d								N
KY0045390	Airview WWTF	Hardin	001-1	09/30/2019	Nitrogen, ammonia total [as	00610-1-1	Effluent Gross									0.9	mg/L			mg/L	N
KY0045390	Airview WWTF	Hardin	001-1	09/30/2019	Nitrogen, ammonia total [as	00610-1-1	Effluent Gross											0.9	mg/L	mg/L	N
KY0045390	Airview WWTF	Hardin	001-1	08/31/2019	Nitrogen, ammonia total [as	00610-1-1	Effluent Gross						lb/d								N
KY0045390	Airview WWTF	Hardin	001-1	08/31/2019	Nitrogen, ammonia total [as	00610-1-1	Effluent Gross													mg/L	N
KY0045390	Airview WWTF	Hardin	001-1	07/31/2019	Nitrogen, ammonia total [as	00610-1-1	Effluent Gross						lb/d								N
KY0045390	Airview WWTF	Hardin	001-1	07/31/2019	Nitrogen, ammonia total [as	00610-1-1	Effluent Gross													mg/L	N
KY0045390	Airview WWTF	Hardin	001-1	06/30/2019	Nitrogen, ammonia total [as	00610-1-1	Effluent Gross						lb/d								N
KY0045390	Airview WWTF	Hardin	001-1	06/30/2019	Nitrogen, ammonia total [as	00610-1-1	Effluent Gross													mg/L	N
KY0045390	Airview WWTF	Hardin	001-1	05/31/2019	Nitrogen, ammonia total [as	00610-1-1	Effluent Gross						lb/d								N
KY0045390	Airview WWTF	Hardin	001-1	05/31/2019	Nitrogen, ammonia total [as	00610-1-1	Effluent Gross													mg/L	N
KY0045390	Airview WWTF	Hardin	001-1	10/31/2018	Nitrogen, ammonia total [as	00610-1-1	Effluent Gross		< .0519	lb/d			lb/d								N
KY0045390	Airview WWTF	Hardin	001-1	10/31/2018	Nitrogen, ammonia total [as	00610-1-1	Effluent Gross				0.0632	lb/d	lb/d								N
KY0045390	Airview WWTF	Hardin	001-1	10/31/2018	Nitrogen, ammonia total [as	00610-1-1	Effluent Gross									< .27	mg/L			mg/L	N
KY0045390	Airview WWTF	Hardin	001-1	10/31/2018	Nitrogen, ammonia total [as	00610-1-1	Effluent Gross											0.3	mg/L	mg/L	N
KY0045390	Airview WWTF	Hardin	001-1	09/30/2018	Nitrogen, ammonia total [as	00610-1-1	Effluent Gross		< .2469	lb/d			lb/d								N
KY0045390	Airview WWTF	Hardin	001-1	09/30/2018	Nitrogen, ammonia total [as	00610-1-1	Effluent Gross				0.685	lb/d	lb/d								N
KY0045390	Airview WWTF	Hardin	001-1	09/30/2018	Nitrogen, ammonia total [as	00610-1-1	Effluent Gross									< 1.036	mg/L			mg/L	N
KY0045390	Airview WWTF	Hardin	001-1	09/30/2018	Nitrogen, ammonia total [as	00610-1-1	Effluent Gross											2.6	mg/L	mg/L	N
KY0045390	Airview WWTF	Hardin	001-1	08/31/2018	Nitrogen, ammonia total [as	00610-1-1	Effluent Gross		0.843	lb/d			lb/d								N
KY0045390	Airview WWTF	Hardin	001-1	08/31/2018	Nitrogen, ammonia total [as	00610-1-1	Effluent Gross	12			3.1	lb/d	lb/d								Y
KY0045390	Airview WWTF	Hardin	001-1	08/31/2018	Nitrogen, ammonia total [as	00610-1-1	Effluent Gross	2								4.07	mg/L			mg/L	Y
KY0045390	Airview WWTF	Hardin	001-1	08/31/2018	Nitrogen, ammonia total [as	00610-1-1	Effluent Gross	150										15	mg/L	mg/L	Y
KY0045390	Airview WWTF	Hardin	001-1	07/31/2018	Nitrogen, ammonia total [as	00610-1-1	Effluent Gross		< 1.468	lb/d			lb/d								N
KY0045390	Airview WWTF	Hardin	001-1	07/31/2018	Nitrogen, ammonia total [as	00610-1-1	Effluent Gross	104			5.64	lb/d	lb/d								Y
KY0045390	Airview WWTF	Hardin	001-1	07/31/2018	Nitrogen, ammonia total [as	00610-1-1	Effluent Gross	76								< 7.06	mg/L			mg/L	Y
KY0045390	Airview WWTF	Hardin	001-1	07/31/2018	Nitrogen, ammonia total [as	00610-1-1	Effluent Gross	350										27	mg/L	mg/L	Y
KY0045390	Airview WWTF	Hardin	001-1	06/30/2018	Nitrogen, ammonia total [as	00610-1-1	Effluent Gross		< .899	lb/d			lb/d								N
KY0045390	Airview WWTF	Hardin	001-1	06/30/2018	Nitrogen, ammonia total [as	00610-1-1	Effluent Gross				2.06	lb/d	lb/d								N
KY0045390	Airview WWTF	Hardin	001-1	06/30/2018	Nitrogen, ammonia total [as	00610-1-1	Effluent Gross									< 2.09	mg/L			mg/L	N
KY0045390	Airview WWTF	Hardin	001-1	06/30/2018	Nitrogen, ammonia total [as	00610-1-1	Effluent Gross	7										6.4	mg/L	mg/L	Y
KY0045390	Airview WWTF	Hardin	001-1	05/31/2018	Nitrogen, ammonia total [as	00610-1-1	Effluent Gross		< .3957	lb/d			lb/d								N
KY0045390	Airview WWTF	Hardin	001-1	05/31/2018	Nitrogen, ammonia total [as	00610-1-1	Effluent Gross				1.72	lb/d	lb/d								N
KY0045390	Airview WWTF	Hardin	001-1	05/31/2018	Nitrogen, ammonia total [as	00610-1-1	Effluent Gross									< 1.89	mg/L			mg/L	N
KY0045390	Airview WWTF	Hardin	001-1	05/31/2018	Nitrogen, ammonia total [as	00610-1-1	Effluent Gross	37										8.2	mg/L	mg/L	Y
KY0045390	Airview WWTF	Hardin	001-1	10/31/2017	Nitrogen, ammonia total [as	00610-1-1	Effluent Gross		1.46	lb/d			lb/d								N
KY0045390	Airview WWTF	Hardin	001-1	10/31/2017	Nitrogen, ammonia total [as	00610-1-1	Effluent Gross				2.6	lb/d	lb/d								N
KY0045390	Airview WWTF	Hardin	001-1	10/31/2017	Nitrogen, ammonia total [as	00610-1-1	Effluent Gross	74								6.95	mg/L			mg/L	Y
KY0045390	Airview WWTF	Hardin	001-1	10/31/2017	Nitrogen, ammonia total [as	00610-1-1	Effluent Gross	100										12	mg/L	mg/L	Y
KY0045390	Airview WWTF	Hardin	001-1	09/30/2017	Nitrogen, ammonia total [as	00610-1-1	Effluent Gross		< 1.492	lb/d			lb/d								N
KY0045390	Airview WWTF	Hardin	001-1	09/30/2017	Nitrogen, ammonia total [as	00610-1-1	Effluent Gross	45			4	lb/d	lb/d								Y
KY0045390	Airview WWTF	Hardin	001-1	09/30/2017	Nitrogen, ammonia total [as	00610-1-1	Effluent Gross	50								< 5.99	mg/L			mg/L	Y
KY0045390	Airview WWTF	Hardin	001-1	09/30/2017	Nitrogen, ammonia total [as	00610-1-1	Effluent Gross	133										14	mg/L	mg/L	Y
KY0045390	Airview WWTF	Hardin	001-1	08/31/2017	Nitrogen, ammonia total [as	00610-1-1	Effluent Gross		< .0849	lb/d			lb/d								N
KY0045390	Airview WWTF	Hardin	001-1	08/31/2017	Nitrogen, ammonia total [as	00610-1-1	Effluent Gross				0.26	lb/d	lb/d								N
KY0045390	Airview WWTF	Hardin	001-1	08/31/2017	Nitrogen, ammonia total [as	00610-1-1	Effluent Gross									< .533	mg/L			mg/L	N
KY0045390	Airview WWTF	Hardin	001-1	08/31/2017	Nitrogen, ammonia total [as	00610-1-1	Effluent Gross											1.2	mg/L	mg/L	N
KY0045390	Airview WWTF	Hardin	001-1	07/31/2017	Nitrogen, ammonia total [as	00610-1-1	Effluent Gross		< 1.04	lb/d			lb/d								N
KY0045390	Airview WWTF	Hardin	001-1	07/31/2017	Nitrogen, ammonia total [as	00610-1-1	Effluent Gross				< 1.04	lb/d	lb/d								N
KY0045390	Airview WWTF	Hardin	001-1	07/31/2017	Nitrogen, ammonia total [as	00610-1-1	Effluent Gross	21								< 4.84	mg/L			mg/L	Y
KY0045390	Airview WWTF	Hardin	001-1	07/31/2017	Nitrogen, ammonia total [as	00610-1-1	Effluent Gross	133										14	mg/L	mg/L	Y
KY0045390	Airview WWTF	Hardin	001-1	06/30/2017	Nitrogen, ammonia total [as	00610-1-1	Effluent Gross		< .826	lb/d			lb/d								N
KY0045390	Airview WWTF	Hardin	001-1	06/30/2017	Nitrogen, ammonia total [as	00610-1-1	Effluent Gross	16			3.2	lb/d	lb/d								Y
KY0045390	Airview WWTF	Hardin	001-1	06/30/2017	Nitrogen, ammonia total [as	00610-1-1	Effluent Gross									< 3.69	mg/L			mg/L	N
KY0045390	Airview WWTF	Hardin	001-1	06/30/2017	Nitrogen, ammonia total [as	00610-1-1	Effluent Gross	133										14	mg/L	mg/L	Y
KY0045390	Airview WWTF	Hardin	001-1	05/31/2017	Nitrogen, ammonia total [as	00610-1-1	Effluent Gross		< .919	lb/d			lb/d								N

KY0045390	Airview WWTF	Hardin	001-1	05/31/2017	Nitrogen, ammonia total [as	00610-1-1	Effluent Gross	27			3.5	lb/d	lb/d							Y
KY0045390	Airview WWTF	Hardin	001-1	05/31/2017	Nitrogen, ammonia total [as	00610-1-1	Effluent Gross									< 3.81	mg/L			N
KY0045390	Airview WWTF	Hardin	001-1	05/31/2017	Nitrogen, ammonia total [as	00610-1-1	Effluent Gross	133										14	mg/L	Y
KY0045390	Airview WWTF	Hardin	001-1	10/31/2016	Nitrogen, ammonia total [as	00610-1-1	Effluent Gross		< 1.39	lb/d			lb/d							N
KY0045390	Airview WWTF	Hardin	001-1	10/31/2016	Nitrogen, ammonia total [as	00610-1-1	Effluent Gross	95			5.37	lb/d	lb/d							Y
KY0045390	Airview WWTF	Hardin	001-1	10/31/2016	Nitrogen, ammonia total [as	00610-1-1	Effluent Gross	81								< 7.26	mg/L			Y
KY0045390	Airview WWTF	Hardin	001-1	10/31/2016	Nitrogen, ammonia total [as	00610-1-1	Effluent Gross	367										28	mg/L	Y
KY0045390	Airview WWTF	Hardin	001-1	09/30/2016	Nitrogen, ammonia total [as	00610-1-1	Effluent Gross	216	< 5.82	lb/d			lb/d							Y
KY0045390	Airview WWTF	Hardin	001-1	09/30/2016	Nitrogen, ammonia total [as	00610-1-1	Effluent Gross	536			17.56	lb/d	lb/d							Y
KY0045390	Airview WWTF	Hardin	001-1	09/30/2016	Nitrogen, ammonia total [as	00610-1-1	Effluent Gross	547								< 25.9	mg/L			Y
KY0045390	Airview WWTF	Hardin	001-1	09/30/2016	Nitrogen, ammonia total [as	00610-1-1	Effluent Gross	1200										78	mg/L	Y
KY0045390	Airview WWTF	Hardin	001-1	08/31/2016	Nitrogen, ammonia total [as	00610-1-1	Effluent Gross		1.66	lb/d			lb/d							N
KY0045390	Airview WWTF	Hardin	001-1	08/31/2016	Nitrogen, ammonia total [as	00610-1-1	Effluent Gross				2.7	lb/d	lb/d							N
KY0045390	Airview WWTF	Hardin	001-1	08/31/2016	Nitrogen, ammonia total [as	00610-1-1	Effluent Gross	111								8.44	mg/L			Y
KY0045390	Airview WWTF	Hardin	001-1	08/31/2016	Nitrogen, ammonia total [as	00610-1-1	Effluent Gross	133										14	mg/L	Y
KY0045390	Airview WWTF	Hardin	001-1	07/31/2016	Nitrogen, ammonia total [as	00610-1-1	Effluent Gross	66	3.05	lb/d			lb/d							Y
KY0045390	Airview WWTF	Hardin	001-1	07/31/2016	Nitrogen, ammonia total [as	00610-1-1	Effluent Gross	70			4.7	lb/d	lb/d							Y
KY0045390	Airview WWTF	Hardin	001-1	07/31/2016	Nitrogen, ammonia total [as	00610-1-1	Effluent Gross	250								13.98	mg/L			Y
KY0045390	Airview WWTF	Hardin	001-1	07/31/2016	Nitrogen, ammonia total [as	00610-1-1	Effluent Gross	233										20	mg/L	Y
KY0045390	Airview WWTF	Hardin	001-1	06/30/2016	Nitrogen, ammonia total [as	00610-1-1	Effluent Gross		< 1.41	lb/d			lb/d							N
KY0045390	Airview WWTF	Hardin	001-1	06/30/2016	Nitrogen, ammonia total [as	00610-1-1	Effluent Gross	66			4.587	lb/d	lb/d							Y
KY0045390	Airview WWTF	Hardin	001-1	06/30/2016	Nitrogen, ammonia total [as	00610-1-1	Effluent Gross	70								< 6.82	mg/L			Y
KY0045390	Airview WWTF	Hardin	001-1	06/30/2016	Nitrogen, ammonia total [as	00610-1-1	Effluent Gross	267										22	mg/L	Y
KY0045390	Airview WWTF	Hardin	001-1	05/31/2016	Nitrogen, ammonia total [as	00610-1-1	Effluent Gross	48	2.72	lb/d			lb/d							Y
KY0045390	Airview WWTF	Hardin	001-1	05/31/2016	Nitrogen, ammonia total [as	00610-1-1	Effluent Gross	26			3.47	lb/d	lb/d							Y
KY0045390	Airview WWTF	Hardin	001-1	05/31/2016	Nitrogen, ammonia total [as	00610-1-1	Effluent Gross	228								13.1	mg/L			Y
KY0045390	Airview WWTF	Hardin	001-1	05/31/2016	Nitrogen, ammonia total [as	00610-1-1	Effluent Gross	167										16	mg/L	Y
KY0045390	Airview WWTF	Hardin	001-1	10/31/2015	Nitrogen, ammonia total [as	00610-1-1	Effluent Gross		< .569	lb/d			lb/d							N
KY0045390	Airview WWTF	Hardin	001-1	10/31/2015	Nitrogen, ammonia total [as	00610-1-1	Effluent Gross				1.47	lb/d	lb/d							N
KY0045390	Airview WWTF	Hardin	001-1	10/31/2015	Nitrogen, ammonia total [as	00610-1-1	Effluent Gross									< 2.05	mg/L			N
KY0045390	Airview WWTF	Hardin	001-1	10/31/2015	Nitrogen, ammonia total [as	00610-1-1	Effluent Gross	13										< 6.8	mg/L	Y
KY0045390	Airview WWTF	Hardin	001-1	09/30/2015	Nitrogen, ammonia total [as	00610-1-1	Effluent Gross		< 1.72	lb/d			lb/d							N
KY0045390	Airview WWTF	Hardin	001-1	09/30/2015	Nitrogen, ammonia total [as	00610-1-1	Effluent Gross	18			3.26	lb/d	lb/d							Y
KY0045390	Airview WWTF	Hardin	001-1	09/30/2015	Nitrogen, ammonia total [as	00610-1-1	Effluent Gross	40								< 5.61	mg/L			Y
KY0045390	Airview WWTF	Hardin	001-1	09/30/2015	Nitrogen, ammonia total [as	00610-1-1	Effluent Gross	183										17	mg/L	Y
KY0045390	Airview WWTF	Hardin	001-1	08/31/2015	Nitrogen, ammonia total [as	00610-1-1	Effluent Gross		< .897	lb/d			lb/d							N
KY0045390	Airview WWTF	Hardin	001-1	08/31/2015	Nitrogen, ammonia total [as	00610-1-1	Effluent Gross				2.49	lb/d	lb/d							N
KY0045390	Airview WWTF	Hardin	001-1	08/31/2015	Nitrogen, ammonia total [as	00610-1-1	Effluent Gross	116								< 8.65	mg/L			Y
KY0045390	Airview WWTF	Hardin	001-1	08/31/2015	Nitrogen, ammonia total [as	00610-1-1	Effluent Gross	200										18	mg/L	Y
KY0045390	Airview WWTF	Hardin	001-1	07/31/2015	Nitrogen, ammonia total [as N]	00610-1-1	Effluent Gross		NODI **8**		NODI **8**		lb/d							N
KY0045390	Airview WWTF	Hardin	001-1	07/31/2015	Nitrogen, ammonia total [as	00610-1-1	Effluent Gross									NODI **8**		NODI **8**	mg/L	N
KY0045390	Airview WWTF	Hardin	001-1	06/30/2015	Nitrogen, ammonia total [as	00610-1-1	Effluent Gross	139	4.4	lb/d			lb/d							Y
KY0045390	Airview WWTF	Hardin	001-1	06/30/2015	Nitrogen, ammonia total [as	00610-1-1	Effluent Gross	112			5.85	lb/d	lb/d							Y
KY0045390	Airview WWTF	Hardin	001-1	06/30/2015	Nitrogen, ammonia total [as	00610-1-1	Effluent Gross	430								21.2	mg/L			Y
KY0045390	Airview WWTF	Hardin	001-1	06/30/2015	Nitrogen, ammonia total [as	00610-1-1	Effluent Gross	383										29	mg/L	Y
KY0045390	Airview WWTF	Hardin	001-1	05/31/2015	Nitrogen, ammonia total [as	00610-1-1	Effluent Gross	100	3.68	lb/d			lb/d							Y
KY0045390	Airview WWTF	Hardin	001-1	05/31/2015	Nitrogen, ammonia total [as	00610-1-1	Effluent Gross	108			5.75	lb/d	lb/d							Y
KY0045390	Airview WWTF	Hardin	001-1	05/31/2015	Nitrogen, ammonia total [as	00610-1-1	Effluent Gross	525								25	mg/L			Y
KY0045390	Airview WWTF	Hardin	001-1	05/31/2015	Nitrogen, ammonia total [as	00610-1-1	Effluent Gross	450										33	mg/L	Y
KY0045390	Airview WWTF	Hardin	001-1	10/31/2014	Nitrogen, ammonia total [as N]	00610-1-1	Effluent Gross		NODI **E**		NODI **E**		lb/d							N
KY0045390	Airview WWTF	Hardin	001-1	10/31/2014	Nitrogen, ammonia total [as	00610-1-1	Effluent Gross									NODI **E**		NODI **E**	mg/L	N
KY0045390	Airview WWTF	Hardin	001-1	04/30/2019	Nitrogen, ammonia total [as	00610-1-2	Effluent Gross						lb/d							N
KY0045390	Airview WWTF	Hardin	001-1	04/30/2019	Nitrogen, ammonia total [as	00610-1-2	Effluent Gross												mg/L	N
KY0045390	Airview WWTF	Hardin	001-1	03/31/2019	Nitrogen, ammonia total [as	00610-1-2	Effluent Gross		2.54	lb/d			lb/d							N
KY0045390	Airview WWTF	Hardin	001-1	03/31/2019	Nitrogen, ammonia total [as	00610-1-2	Effluent Gross				4.4	lb/d	lb/d							N
KY0045390	Airview WWTF	Hardin	001-1	03/31/2019	Nitrogen, ammonia total [as	00610-1-2	Effluent Gross	96								19.58	mg/L			Y
KY0045390	Airview WWTF	Hardin	001-1	03/31/2019	Nitrogen, ammonia total [as	00610-1-2	Effluent Gross	87										28	mg/L	Y
KY0045390	Airview WWTF	Hardin	001-1	02/28/2019	Nitrogen, ammonia total [as	00610-1-2	Effluent Gross	4	< 4.797	lb/d			lb/d							Y
KY0045390	Airview WWTF	Hardin	001-1	02/28/2019	Nitrogen, ammonia total [as	00610-1-2	Effluent Gross	138			16.4	lb/d	lb/d							Y
KY0045390	Airview WWTF	Hardin	001-1	02/28/2019	Nitrogen, ammonia total [as	00610-1-2	Effluent Gross									< 6.61	mg/L			N
KY0045390	Airview WWTF	Hardin	001-1	02/28/2019	Nitrogen, ammonia total [as	00610-1-2	Effluent Gross	7										16	mg/L	Y
KY0045390	Airview WWTF	Hardin	001-1	01/31/2019	Nitrogen, ammonia total [as	00610-1-2	Effluent Gross		< .7296	lb/d			lb/d							N
KY0045390	Airview WWTF	Hardin	001-1	01/31/2019	Nitrogen, ammonia total [as	00610-1-2	Effluent Gross				2.08	lb/d	lb/d							N
KY0045390	Airview WWTF	Hardin	001-1	01/31/2019	Nitrogen, ammonia total [as	00610-1-2	Effluent Gross									< 3.25	mg/L			N
KY0045390	Airview WWTF	Hardin	001-1	01/31/2019	Nitrogen, ammonia total [as	00610-1-2	Effluent Gross											9.2	mg/L	N
KY0045390	Airview WWTF	Hardin	001-1	12/31/2018	Nitrogen, ammonia total [as	00610-1-2	Effluent Gross						lb/d							N
KY0045390	Airview WWTF	Hardin	001-1	12/31/2018	Nitrogen, ammonia total [as	00610-1-2	Effluent Gross												mg/L	N
KY0045390	Airview WWTF	Hardin	001-1	11/30/2018	Nitrogen, ammonia total [as	00610-1-2	Effluent Gross		3.68	lb/d			lb/d							N
KY0045390	Airview WWTF	Hardin	001-1	11/30/2018	Nitrogen, ammonia total [as	00610-1-2	Effluent Gross	22			8.41	lb/d	lb/d							Y
KY0045390	Airview WWTF	Hardin	001-1	11/30/2018	Nitrogen, ammonia total [as	00610-1-2	Effluent Gross									8.125	mg/L			N
KY0045390	Airview WWTF	Hardin	001-1	11/30/2018	Nitrogen, ammonia total [as	00610-1-2	Effluent Gross	7										16	mg/L	Y
KY0045390	Airview WWTF	Hardin	001-1	04/30/2018	Nitrogen, ammonia total [as	00610-1-2	Effluent Gross		< 1.16	lb/d			lb/d							N
KY0045390	Airview WWTF	Hardin	001-1	04/30/2018	Nitrogen, ammonia total [as	00610-1-2	Effluent Gross				3.52	lb/d	lb/d							N
KY0045390	Airview WWTF	Hardin	001-1	04/30/2018	Nitrogen, ammonia total [as	00610-1-2	Effluent Gross									< 5.86	mg/L			N
KY0045390	Airview WWTF	Hardin	001-1	04/30/2018	Nitrogen, ammonia total [as	00610-1-2	Effluent Gross	20										18	mg/L	Y
KY0045390	Airview WWTF	Hardin	001-1	03/31/2018	Nitrogen, ammonia total [as	00610-1-2	Effluent Gross		< .314	lb/d			lb/d							N
KY0045390	Airview WWTF	Hardin	001-1	03/31/2018	Nitrogen, ammonia total [as	00610-1-2	Effluent Gross				1.04	lb/d	lb/d							N
KY0045390	Airview WWTF	Hardin	001-1	03/31/2018	Nitrogen, ammonia total [as	00610-1-2	Effluent Gross									< 1.49	mg/L			N
KY0045390	Airview WWTF	Hardin	001-1	03/31/2018	Nitrogen, ammonia total [as	00610-1-2	Effluent Gross											4.8	mg/L	N
KY0045390	Airview WWTF	Hardin	001-1	02/28/2018	Nitrogen, ammonia total [as	00610-1-2	Effluent Gross		< 1.215	lb/d			lb/d							N
KY0045390	Airview WWTF	Hardin	001-1	02/28/2018	Nitrogen, ammonia total [as	00610-1-2	Effluent Gross				2.48	lb/d	lb/d							N
KY0045390	Airview WWTF	Hardin	001-1	02/28/2018	Nitrogen, ammonia total [as	00610-1-2	Effluent Gross									< 4.32	mg/L			N
KY0045390	Airview WWTF	Hardin	001-1	02/28/2018	Nitrogen, ammonia total [as	00610-1-2	Effluent Gross											12	mg/L	N
KY0045390	Airview WWTF	Hardin	001-1	01/31/2018	Nitrogen, ammonia total [as	00610-1-2	Effluent Gross		< .053	lb/d			lb/d							N
KY0045390	Airview WWTF	Hardin	001-1	01/31/2018	Nitrogen, ammonia total [as	00610-1-2	Effluent Gross				< .52	lb/d	lb/d							N
KY0045390	Airview WWTF	Hardin	001-1	01/31/2018	Nitrogen, ammonia total [as	00610-1-2	Effluent Gross									< .25	mg/L			N
KY0045390	Airview WWTF	Hardin	001-1	01/31/2018	Nitrogen, ammonia total [as	00610-1-2	Effluent Gross											< .25	mg/L	N
KY0045390	Airview WWTF	Hardin	001-1	12/31/2017	Nitrogen, ammonia total [as	00610-1-2	Effluent Gross		< .0576	lb/d			lb/d							N
KY0045390	Airview WWTF	Hardin	001-1	12/31/2017	Nitrogen, ammonia total [as	00610-1-2	Effluent Gross				0.084	lb/d	lb/d							N
KY0045390	Airview WWTF	Hardin	001-1	12/31/2017	Nitrogen, ammonia total [as	00610-1-2	Effluent Gross									< .288	mg/L			N
KY0045390	Airview WWTF	Hardin	001-1	12/31/2017	Nitrogen, ammonia total [as	00610-1-2	Effluent Gross											0.4	mg/L	N
KY0045390	Airview WWTF	Hardin	001-1	11/30/2017	Nitrogen, ammonia total [as	00610-1-2	Effluent Gross		< .566	lb/d			lb/d							N
KY0045390	Airview WWTF	Hardin	001-1	11/30/2017	Nitrogen, ammonia total [as	00610-1-2	Effluent Gross				2.5	lb/d	lb/d							N
KY0045390	Airview WWTF	Hardin	001-1	11/30/2017	Nitrogen, ammonia total [as	00610-1-2	Effluent Gross									< 3.5	mg/L			N
KY0045390	Airview WWTF	Hardin	001-1	11/30/2017	Nitrogen, ammonia total [as	00610-1-2	Effluent Gross											12	mg/L	N
KY0045390	Airview WWTF	Hardin	001-1	04/30/2017	Nitrogen, ammonia total [as	00610-1-2	Effluent Gross		< .732	lb/d			lb/d							N
KY0045390	Airview WWTF	Hardin	001-1	04/30/2017	Nitrogen, ammonia total [as	00610-1-2	Effluent Gross				2.6	lb/d	lb/d							N
KY0045390	Airview WWTF	Hardin	001-1	04/30/2017	Nitrogen, ammonia total [as	00610-1-2	Effluent Gross									< 3.33	mg/L			N
KY0045390	Airview WWTF	Hardin	001-1	04/30/2017	Nitrogen, ammonia total [as	00610-1-2	Effluent Gross											12	mg/L	N
KY0045390	Airview WWTF	Hardin	001-1	03/31/2017	Nitrogen, ammonia total [as	00610-1-2	Effluent Gross		< .0689	lb/d			lb/d							N
KY0045390	Airview WWTF	Hardin	001-1	03/31/2017	Nitrogen, ammonia total [as	00610-1-2	Effluent Gross				< .109	lb/d	lb/d							N
KY0045390	Airview WWTF	Hardin	001-1	03/31/2017	Nitrogen, ammonia total [as	00610-1-2	Effluent Gross									< .25	mg/L			N
KY0045390	Airview WWTF	Hardin	001-1	03/31/2017	Nitrogen, ammonia total [as	00610-1-2	Effluent Gross											< .25	mg/L	N
KY0045390	Airview WWTF	Hardin	001-1	02/28/2017	Nitrogen, ammonia total [as	00610-1-2	Effluent Gross		0.0652	lb/d			lb/d							N
KY0045390	Airview WWTF	Hardin	001-1	02/28/2017	Nitrogen, ammonia total [as	00610-1-2	Effluent Gross				0.114	lb/d	lb/d							N
KY0045390	Airview WWTF	Hardin	001-1	02/28/2017	Nitrogen, ammonia total [as	00610-1-2	Effluent Gross									2.224	mg/L			N
KY0045390	Airview WWTF	Hardin	001-1	02/28/2017	Nitrogen, ammonia total [as	00610-1-2	Effluent Gross											7.6	mg/L	N
KY0045390	Airview WWTF	Hardin	001-1	01/31/2017	Nitrogen, ammonia total [as	00610-1-2	Effluent Gross		< .415	lb/d			lb/d							N
KY0045390	Airview WWTF	Hardin	001-1	01/31/2017	Nitrogen, ammonia total [as	00610-1-2	Effluent Gross				0.98	lb/d	lb/d							N
KY0045390	Airview WWTF	Hardin	001-1	01/31/2017	Nitrogen, ammonia total [as	00610-1-2	Effluent Gross									< 5.24	mg/L			N
KY0045390	Airview WWTF	Hardin	001-1	01/31/2017	Nitrogen, ammonia total [as	00610-1-2	Effluent Gross											9.8	mg/L	N
KY0045390	Airview WWTF	Hardin	001-1	12/31/2016	Nitrogen, ammonia total [as	00610-1-2	Effluent Gross		< .356	lb/d			lb/d							N
KY0045390	Airview WWTF	Hardin	001-1	12/31/2016	Nitrogen, ammonia total [as	00610-1-2	Effluent Gross				0.92	lb/d	lb/d							N

KY0045390	Airview WWTF	Hardin	001-1	12/31/2016	Nitrogen, ammonia total [as	00610-1-2	Effluent Gross									< 1.78	mg/L			mg/L	N
KY0045390	Airview WWTF	Hardin	001-1	12/31/2016	Nitrogen, ammonia total [as	00610-1-2	Effluent Gross											4.6	mg/L	mg/L	N
KY0045390	Airview WWTF	Hardin	001-1	11/30/2016	Nitrogen, ammonia total [as	00610-1-2	Effluent Gross		0.413	lb/d			lb/d								N
KY0045390	Airview WWTF	Hardin	001-1	11/30/2016	Nitrogen, ammonia total [as	00610-1-2	Effluent Gross				0.56	lb/d	lb/d								N
KY0045390	Airview WWTF	Hardin	001-1	11/30/2016	Nitrogen, ammonia total [as	00610-1-2	Effluent Gross									< .99	mg/L			mg/L	N
KY0045390	Airview WWTF	Hardin	001-1	11/30/2016	Nitrogen, ammonia total [as	00610-1-2	Effluent Gross											0.78	mg/L	mg/L	N
KY0045390	Airview WWTF	Hardin	001-1	04/30/2016	Nitrogen, ammonia total [as	00610-1-2	Effluent Gross		< 2.64	lb/d			lb/d								N
KY0045390	Airview WWTF	Hardin	001-1	04/30/2016	Nitrogen, ammonia total [as	00610-1-2	Effluent Gross	5			7.24	lb/d	lb/d								Y
KY0045390	Airview WWTF	Hardin	001-1	04/30/2016	Nitrogen, ammonia total [as	00610-1-2	Effluent Gross	7								< 10.74	mg/L			mg/L	Y
KY0045390	Airview WWTF	Hardin	001-1	04/30/2016	Nitrogen, ammonia total [as	00610-1-2	Effluent Gross	87										28	mg/L	mg/L	Y
KY0045390	Airview WWTF	Hardin	001-1	03/31/2016	Nitrogen, ammonia total [as	00610-1-2	Effluent Gross		1.54	lb/d			lb/d								N
KY0045390	Airview WWTF	Hardin	001-1	03/31/2016	Nitrogen, ammonia total [as	00610-1-2	Effluent Gross				4.003	lb/d	lb/d								N
KY0045390	Airview WWTF	Hardin	001-1	03/31/2016	Nitrogen, ammonia total [as	00610-1-2	Effluent Gross									6.82	mg/L			mg/L	N
KY0045390	Airview WWTF	Hardin	001-1	03/31/2016	Nitrogen, ammonia total [as	00610-1-2	Effluent Gross	7										16	mg/L	mg/L	Y
KY0045390	Airview WWTF	Hardin	001-1	02/29/2016	Nitrogen, ammonia total [as	00610-1-2	Effluent Gross		< .964	lb/d			lb/d								N
KY0045390	Airview WWTF	Hardin	001-1	02/29/2016	Nitrogen, ammonia total [as	00610-1-2	Effluent Gross				2.7	lb/d	lb/d								N
KY0045390	Airview WWTF	Hardin	001-1	02/29/2016	Nitrogen, ammonia total [as	00610-1-2	Effluent Gross									< 4.325	mg/L			mg/L	N
KY0045390	Airview WWTF	Hardin	001-1	02/29/2016	Nitrogen, ammonia total [as	00610-1-2	Effluent Gross											12	mg/L	mg/L	N
KY0045390	Airview WWTF	Hardin	001-1	01/31/2016	Nitrogen, ammonia total [as	00610-1-2	Effluent Gross		< .468	lb/d			lb/d								N
KY0045390	Airview WWTF	Hardin	001-1	01/31/2016	Nitrogen, ammonia total [as	00610-1-2	Effluent Gross				0.911	lb/d	lb/d								N
KY0045390	Airview WWTF	Hardin	001-1	01/31/2016	Nitrogen, ammonia total [as	00610-1-2	Effluent Gross									< 2.13	mg/L			mg/L	N
KY0045390	Airview WWTF	Hardin	001-1	01/31/2016	Nitrogen, ammonia total [as	00610-1-2	Effluent Gross											4.1	mg/L	mg/L	N
KY0045390	Airview WWTF	Hardin	001-1	12/31/2015	Nitrogen, ammonia total [as	00610-1-2	Effluent Gross		1.4	lb/d			lb/d								N
KY0045390	Airview WWTF	Hardin	001-1	12/31/2015	Nitrogen, ammonia total [as	00610-1-2	Effluent Gross				2.6	lb/d	lb/d								N
KY0045390	Airview WWTF	Hardin	001-1	12/31/2015	Nitrogen, ammonia total [as	00610-1-2	Effluent Gross									6.56	mg/L			mg/L	N
KY0045390	Airview WWTF	Hardin	001-1	12/31/2015	Nitrogen, ammonia total [as	00610-1-2	Effluent Gross											12	mg/L	mg/L	N
KY0045390	Airview WWTF	Hardin	001-1	11/30/2015	Nitrogen, ammonia total [as	00610-1-2	Effluent Gross		1.06	lb/d			lb/d								N
KY0045390	Airview WWTF	Hardin	001-1	11/30/2015	Nitrogen, ammonia total [as	00610-1-2	Effluent Gross				2.02	lb/d	lb/d								N
KY0045390	Airview WWTF	Hardin	001-1	11/30/2015	Nitrogen, ammonia total [as	00610-1-2	Effluent Gross									5.35	mg/L			mg/L	N
KY0045390	Airview WWTF	Hardin	001-1	11/30/2015	Nitrogen, ammonia total [as	00610-1-2	Effluent Gross											11	mg/L	mg/L	N
KY0045390	Airview WWTF	Hardin	001-1	04/30/2015	Nitrogen, ammonia total [as	00610-1-2	Effluent Gross		2.48	lb/d			lb/d								N
KY0045390	Airview WWTF	Hardin	001-1	04/30/2015	Nitrogen, ammonia total [as	00610-1-2	Effluent Gross				4.2	lb/d	lb/d								N
KY0045390	Airview WWTF	Hardin	001-1	04/30/2015	Nitrogen, ammonia total [as	00610-1-2	Effluent Gross	28								12.8	mg/L			mg/L	Y
KY0045390	Airview WWTF	Hardin	001-1	04/30/2015	Nitrogen, ammonia total [as	00610-1-2	Effluent Gross	67										25	mg/L	mg/L	Y
KY0045390	Airview WWTF	Hardin	001-1	03/31/2015	Nitrogen, ammonia total [as	00610-1-2	Effluent Gross		2.16	lb/d			lb/d								N
KY0045390	Airview WWTF	Hardin	001-1	03/31/2015	Nitrogen, ammonia total [as	00610-1-2	Effluent Gross				3.43	lb/d	lb/d								N
KY0045390	Airview WWTF	Hardin	001-1	03/31/2015	Nitrogen, ammonia total [as	00610-1-2	Effluent Gross	27								12.7	mg/L			mg/L	Y
KY0045390	Airview WWTF	Hardin	001-1	03/31/2015	Nitrogen, ammonia total [as	00610-1-2	Effluent Gross	13										17	mg/L	mg/L	Y
KY0045390	Airview WWTF	Hardin	001-1	02/28/2015	Nitrogen, ammonia total [as	00610-1-2	Effluent Gross		4.38	lb/d			lb/d								N
KY0045390	Airview WWTF	Hardin	001-1	02/28/2015	Nitrogen, ammonia total [as	00610-1-2	Effluent Gross				5.21	lb/d	lb/d								N
KY0045390	Airview WWTF	Hardin	001-1	02/28/2015	Nitrogen, ammonia total [as	00610-1-2	Effluent Gross	102								20.2	mg/L			mg/L	Y
KY0045390	Airview WWTF	Hardin	001-1	02/28/2015	Nitrogen, ammonia total [as	00610-1-2	Effluent Gross	67										25	mg/L	mg/L	Y
KY0045390	Airview WWTF	Hardin	001-1	01/31/2015	Nitrogen, ammonia total [as	00610-1-2	Effluent Gross	98	9.11	lb/d			lb/d								Y
KY0045390	Airview WWTF	Hardin	001-1	01/31/2015	Nitrogen, ammonia total [as	00610-1-2	Effluent Gross	261			24.9	lb/d	lb/d								Y
KY0045390	Airview WWTF	Hardin	001-1	01/31/2015	Nitrogen, ammonia total [as	00610-1-2	Effluent Gross	70								17	mg/L			mg/L	Y
KY0045390	Airview WWTF	Hardin	001-1	01/31/2015	Nitrogen, ammonia total [as	00610-1-2	Effluent Gross	40										21	mg/L	mg/L	Y
KY0045390	Airview WWTF	Hardin	001-1	12/31/2014	Nitrogen, ammonia total [as	00610-1-2	Effluent Gross	9	5.02	lb/d			lb/d								Y
KY0045390	Airview WWTF	Hardin	001-1	12/31/2014	Nitrogen, ammonia total [as	00610-1-2	Effluent Gross	2			7.01	lb/d	lb/d								Y
KY0045390	Airview WWTF	Hardin	001-1	12/31/2014	Nitrogen, ammonia total [as	00610-1-2	Effluent Gross	163								26.3	mg/L			mg/L	Y
KY0045390	Airview WWTF	Hardin	001-1	12/31/2014	Nitrogen, ammonia total [as	00610-1-2	Effluent Gross	107										31	mg/L	mg/L	Y
KY0045390	Airview WWTF	Hardin	001-1	11/30/2014	Nitrogen, ammonia total [as N]	00610-1-2	Effluent Gross		NODI **E**		NODI **E**		lb/d								N
KY0045390	Airview WWTF	Hardin	001-1	11/30/2014	Nitrogen, ammonia total [as	00610-1-2	Effluent Gross									NODI **E**		NODI **E**		mg/L	N
KY0045390	Airview WWTF	Hardin	001-1	09/30/2019	Flow, in conduit or thru	50050-1-0	Effluent Gross		1.477	MGD			MGD								N
KY0045390	Airview WWTF	Hardin	001-1	09/30/2019	Flow, in conduit or thru	50050-1-0	Effluent Gross				1.477	MGD	MGD								N
KY0045390	Airview WWTF	Hardin	001-1	08/31/2019	Flow, in conduit or thru	50050-1-0	Effluent Gross						MGD								N
KY0045390	Airview WWTF	Hardin	001-1	07/31/2019	Flow, in conduit or thru	50050-1-0	Effluent Gross						MGD								N
KY0045390	Airview WWTF	Hardin	001-1	06/30/2019	Flow, in conduit or thru	50050-1-0	Effluent Gross						MGD								N
KY0045390	Airview WWTF	Hardin	001-1	05/31/2019	Flow, in conduit or thru	50050-1-0	Effluent Gross						MGD								N
KY0045390	Airview WWTF	Hardin	001-1	04/30/2019	Flow, in conduit or thru	50050-1-0	Effluent Gross						MGD								N
KY0045390	Airview WWTF	Hardin	001-1	03/31/2019	Flow, in conduit or thru	50050-1-0	Effluent Gross		0.01857	MGD			MGD								N
KY0045390	Airview WWTF	Hardin	001-1	03/31/2019	Flow, in conduit or thru	50050-1-0	Effluent Gross				0.026	MGD	MGD								N
KY0045390	Airview WWTF	Hardin	001-1	02/28/2019	Flow, in conduit or thru	50050-1-0	Effluent Gross		0.028225	MGD			MGD								N
KY0045390	Airview WWTF	Hardin	001-1	02/28/2019	Flow, in conduit or thru	50050-1-0	Effluent Gross				0.034	MGD	MGD								N
KY0045390	Airview WWTF	Hardin	001-1	01/31/2019	Flow, in conduit or thru	50050-1-0	Effluent Gross		0.02552	MGD			MGD								N
KY0045390	Airview WWTF	Hardin	001-1	01/31/2019	Flow, in conduit or thru	50050-1-0	Effluent Gross				0.027	MGD	MGD								N
KY0045390	Airview WWTF	Hardin	001-1	12/31/2018	Flow, in conduit or thru	50050-1-0	Effluent Gross						MGD								N
KY0045390	Airview WWTF	Hardin	001-1	11/30/2018	Flow, in conduit or thru	50050-1-0	Effluent Gross		0.02559	MGD			MGD								N
KY0045390	Airview WWTF	Hardin	001-1	11/30/2018	Flow, in conduit or thru	50050-1-0	Effluent Gross				0.028	MGD	MGD								N
KY0045390	Airview WWTF	Hardin	001-1	10/31/2018	Flow, in conduit or thru	50050-1-0	Effluent Gross		0.0235	MGD			MGD								N
KY0045390	Airview WWTF	Hardin	001-1	10/31/2018	Flow, in conduit or thru	50050-1-0	Effluent Gross				0.025	MGD	MGD								N
KY0045390	Airview WWTF	Hardin	001-1	09/30/2018	Flow, in conduit or thru	50050-1-0	Effluent Gross		0.02575	MGD			MGD								N
KY0045390	Airview WWTF	Hardin	001-1	09/30/2018	Flow, in conduit or thru	50050-1-0	Effluent Gross				0.032	MGD	MGD								N
KY0045390	Airview WWTF	Hardin	001-1	08/31/2018	Flow, in conduit or thru	50050-1-0	Effluent Gross		0.02433	MGD			MGD								N
KY0045390	Airview WWTF	Hardin	001-1	08/31/2018	Flow, in conduit or thru	50050-1-0	Effluent Gross				0.02433	MGD	MGD								N
KY0045390	Airview WWTF	Hardin	001-1	07/31/2018	Flow, in conduit or thru	50050-1-0	Effluent Gross		0.02375	MGD			MGD								N
KY0045390	Airview WWTF	Hardin	001-1	07/31/2018	Flow, in conduit or thru	50050-1-0	Effluent Gross				0.025	MGD	MGD								N
KY0045390	Airview WWTF	Hardin	001-1	06/30/2018	Flow, in conduit or thru	50050-1-0	Effluent Gross		0.08075	MGD			MGD								N
KY0045390	Airview WWTF	Hardin	001-1	06/30/2018	Flow, in conduit or thru	50050-1-0	Effluent Gross				0.25	MGD	MGD								N
KY0045390	Airview WWTF	Hardin	001-1	05/31/2018	Flow, in conduit or thru	50050-1-0	Effluent Gross		0.0252	MGD			MGD								N
KY0045390	Airview WWTF	Hardin	001-1	05/31/2018	Flow, in conduit or thru	50050-1-0	Effluent Gross				0.027	MGD	MGD								N
KY0045390	Airview WWTF	Hardin	001-1	04/30/2018	Flow, in conduit or thru	50050-1-0	Effluent Gross		0.02475	MGD			MGD								N
KY0045390	Airview WWTF	Hardin	001-1	04/30/2018	Flow, in conduit or thru	50050-1-0	Effluent Gross				0.026	MGD	MGD								N
KY0045390	Airview WWTF	Hardin	001-1	03/31/2018	Flow, in conduit or thru	50050-1-0	Effluent Gross		0.0238	MGD			MGD								N
KY0045390	Airview WWTF	Hardin	001-1	03/31/2018	Flow, in conduit or thru	50050-1-0	Effluent Gross				0.026	MGD	MGD								N
KY0045390	Airview WWTF	Hardin	001-1	02/28/2018	Flow, in conduit or thru	50050-1-0	Effluent Gross		0.025	MGD			MGD								N
KY0045390	Airview WWTF	Hardin	001-1	02/28/2018	Flow, in conduit or thru	50050-1-0	Effluent Gross				0.026	MGD	MGD								N
KY0045390	Airview WWTF	Hardin	001-1	01/31/2018	Flow, in conduit or thru	50050-1-0	Effluent Gross		0.06551	MGD			MGD								N
KY0045390	Airview WWTF	Hardin	001-1	01/31/2018	Flow, in conduit or thru	50050-1-0	Effluent Gross				0.25	MGD	MGD								N
KY0045390	Airview WWTF	Hardin	001-1	12/31/2017	Flow, in conduit or thru	50050-1-0	Effluent Gross		0.02375	MGD			MGD								N
KY0045390	Airview WWTF	Hardin	001-1	12/31/2017	Flow, in conduit or thru	50050-1-0	Effluent Gross				0.025	MGD	MGD								N
KY0045390	Airview WWTF	Hardin	001-1	11/30/2017	Flow, in conduit or thru	50050-1-0	Effluent Gross		0.01801	MGD			MGD								N
KY0045390	Airview WWTF	Hardin	001-1	11/30/2017	Flow, in conduit or thru	50050-1-0	Effluent Gross				0.0351	MGD	MGD								N
KY0045390	Airview WWTF	Hardin	001-1	10/31/2017	Flow, in conduit or thru	50050-1-0	Effluent Gross		0.02475	MGD			MGD								N
KY0045390	Airview WWTF	Hardin	001-1	10/31/2017	Flow, in conduit or thru	50050-1-0	Effluent Gross				0.029	MGD	MGD								N
KY0045390	Airview WWTF	Hardin	001-1	09/30/2017	Flow, in conduit or thru	50050-1-0	Effluent Gross		0.027	MGD			MGD								N
KY0045390	Airview WWTF	Hardin	001-1	09/30/2017	Flow, in conduit or thru	50050-1-0	Effluent Gross				0.034	MGD	MGD								N
KY0045390	Airview WWTF	Hardin	001-1	08/31/2017	Flow, in conduit or thru	50050-1-0	Effluent Gross		0.01986	MGD			MGD								N
KY0045390	Airview WWTF	Hardin	001-1	08/31/2017	Flow, in conduit or thru	50050-1-0	Effluent Gross				0.026	MGD	MGD								N
KY0045390	Airview WWTF	Hardin	001-1	07/31/2017	Flow, in conduit or thru	50050-1-0	Effluent Gross		0.026	MGD			MGD								N
KY0045390	Airview WWTF	Hardin	001-1	07/31/2017	Flow, in conduit or thru	50050-1-0	Effluent Gross				0.032	MGD	MGD								N
KY0045390	Airview WWTF	Hardin	001-1	06/30/2017	Flow, in conduit or thru	50050-1-0	Effluent Gross		0.0255	MGD			MGD								N
KY0045390	Airview WWTF	Hardin	001-1	06/30/2017	Flow, in conduit or thru	50050-1-0	Effluent Gross				0.027	MGD	MGD								N
KY0045390	Airview WWTF	Hardin	001-1	05/31/2017	Flow, in conduit or thru	50050-1-0	Effluent Gross		0.0275	MGD			MGD								N
KY0045390	Airview WWTF	Hardin	001-1	05/31/2017	Flow, in conduit or thru	50050-1-0	Effluent Gross				0.029	MGD	MGD								N
KY0045390	Airview WWTF	Hardin	001-1	04/30/2017	Flow, in conduit or thru	50050-1-0	Effluent Gross		0.0325	MGD			MGD								N
KY0045390	Airview WWTF	Hardin	001-1	04/30/2017	Flow, in conduit or thru	50050-1-0	Effluent Gross				0.054	MGD	MGD								N
KY0045390	Airview WWTF	Hardin	001-1	03/31/2017	Flow, in conduit or thru	50050-1-0	Effluent Gross		0.033	MGD			MGD								N
KY0045390	Airview WWTF	Hardin	001-1	03/31/2017	Flow, in conduit or thru	50050-1-0	Effluent Gross				0.052	MGD	MGD								N
KY0045390	Airview WWTF	Hardin	001-1	02/28/2017	Flow, in conduit or thru	50050-1-0	Effluent Gross		0.0162	MGD			MGD								N
KY0045390	Airview WWTF	Hardin	001-1	02/28/2017	Flow, in conduit or thru	50050-1-0	Effluent Gross				0.024	MGD	MGD								N
KY0045390	Airview WWTF	Hardin	001-1	01/31/2017	Flow, in conduit or thru	50050-1-0	Effluent Gross		0.01687	MGD			MGD								N
KY0045390	Airview WWTF	Hardin	001-1	01/31/2017	Flow, in conduit or thru	50050-1-0	Effluent Gross				0.024	MGD	MGD								N
KY0045390	Airview WWTF	Hardin	001-1	12/31/2016	Flow, in conduit or thru	50050-1-0	Effluent Gross		0.024	MGD			MGD								N

KY0045390	Airview WWTF	Hardin	001-1	12/31/2016	Flow, in conduit or thru	50050-1-0	Effluent Gross				0.024	MGD	MGD										N
KY0045390	Airview WWTF	Hardin	001-1	11/30/2016	Flow, in conduit or thru	50050-1-0	Effluent Gross		0.024	MGD			MGD										N
KY0045390	Airview WWTF	Hardin	001-1	11/30/2016	Flow, in conduit or thru	50050-1-0	Effluent Gross				0.024	MGD	MGD										N
KY0045390	Airview WWTF	Hardin	001-1	10/31/2016	Flow, in conduit or thru	50050-1-0	Effluent Gross		0.01825	MGD			MGD										N
KY0045390	Airview WWTF	Hardin	001-1	10/31/2016	Flow, in conduit or thru	50050-1-0	Effluent Gross				0.025	MGD	MGD										N
KY0045390	Airview WWTF	Hardin	001-1	09/30/2016	Flow, in conduit or thru	50050-1-0	Effluent Gross		0.07575	MGD			MGD										N
KY0045390	Airview WWTF	Hardin	001-1	09/30/2016	Flow, in conduit or thru	50050-1-0	Effluent Gross				0.23	MGD	MGD										N
KY0045390	Airview WWTF	Hardin	001-1	08/31/2016	Flow, in conduit or thru	50050-1-0	Effluent Gross		0.0244	MGD			MGD										N
KY0045390	Airview WWTF	Hardin	001-1	08/31/2016	Flow, in conduit or thru	50050-1-0	Effluent Gross				0.028	MGD	MGD										N
KY0045390	Airview WWTF	Hardin	001-1	07/31/2016	Flow, in conduit or thru	50050-1-0	Effluent Gross		0.0265	MGD			MGD										N
KY0045390	Airview WWTF	Hardin	001-1	07/31/2016	Flow, in conduit or thru	50050-1-0	Effluent Gross				0.028	MGD	MGD										N
KY0045390	Airview WWTF	Hardin	001-1	06/30/2016	Flow, in conduit or thru	50050-1-0	Effluent Gross		0.025	MGD			MGD										N
KY0045390	Airview WWTF	Hardin	001-1	06/30/2016	Flow, in conduit or thru	50050-1-0	Effluent Gross				0.028	MGD	MGD										N
KY0045390	Airview WWTF	Hardin	001-1	05/31/2016	Flow, in conduit or thru	50050-1-0	Effluent Gross		0.0245	MGD			MGD										N
KY0045390	Airview WWTF	Hardin	001-1	05/31/2016	Flow, in conduit or thru	50050-1-0	Effluent Gross				0.026	MGD	MGD										N
KY0045390	Airview WWTF	Hardin	001-1	04/30/2016	Flow, in conduit or thru	50050-1-0	Effluent Gross		0.02691	MGD			MGD										N
KY0045390	Airview WWTF	Hardin	001-1	04/30/2016	Flow, in conduit or thru	50050-1-0	Effluent Gross				0.031	MGD	MGD										N
KY0045390	Airview WWTF	Hardin	001-1	03/31/2016	Flow, in conduit or thru	50050-1-0	Effluent Gross		0.0262	MGD			MGD										N
KY0045390	Airview WWTF	Hardin	001-1	03/31/2016	Flow, in conduit or thru	50050-1-0	Effluent Gross				0.03	MGD	MGD										N
KY0045390	Airview WWTF	Hardin	001-1	02/29/2016	Flow, in conduit or thru	50050-1-0	Effluent Gross		0.027	MGD			MGD										N
KY0045390	Airview WWTF	Hardin	001-1	02/29/2016	Flow, in conduit or thru	50050-1-0	Effluent Gross				0.03	MGD	MGD										N
KY0045390	Airview WWTF	Hardin	001-1	01/31/2016	Flow, in conduit or thru	50050-1-0	Effluent Gross		0.026	MGD			MGD										N
KY0045390	Airview WWTF	Hardin	001-1	01/31/2016	Flow, in conduit or thru	50050-1-0	Effluent Gross				0.028	MGD	MGD										N
KY0045390	Airview WWTF	Hardin	001-1	12/31/2015	Flow, in conduit or thru	50050-1-0	Effluent Gross		0.02475	MGD			MGD										N
KY0045390	Airview WWTF	Hardin	001-1	12/31/2015	Flow, in conduit or thru	50050-1-0	Effluent Gross				0.026	MGD	MGD										N
KY0045390	Airview WWTF	Hardin	001-1	11/30/2015	Flow, in conduit or thru	50050-1-0	Effluent Gross		0.02425	MGD			MGD										N
KY0045390	Airview WWTF	Hardin	001-1	11/30/2015	Flow, in conduit or thru	50050-1-0	Effluent Gross				0.026	MGD	MGD										N
KY0045390	Airview WWTF	Hardin	001-1	10/31/2015	Flow, in conduit or thru	50050-1-0	Effluent Gross		0.004717	MGD			MGD										N
KY0045390	Airview WWTF	Hardin	001-1	10/31/2015	Flow, in conduit or thru	50050-1-0	Effluent Gross				0.135	MGD	MGD										N
KY0045390	Airview WWTF	Hardin	001-1	09/30/2015	Flow, in conduit or thru	50050-1-0	Effluent Gross		0.04425	MGD			MGD										N
KY0045390	Airview WWTF	Hardin	001-1	09/30/2015	Flow, in conduit or thru	50050-1-0	Effluent Gross				0.103	MGD	MGD										N
KY0045390	Airview WWTF	Hardin	001-1	08/31/2015	Flow, in conduit or thru	50050-1-0	Effluent Gross		0.01826	MGD			MGD										N
KY0045390	Airview WWTF	Hardin	001-1	08/31/2015	Flow, in conduit or thru	50050-1-0	Effluent Gross				0.02722	MGD	MGD										N
KY0045390	Airview WWTF	Hardin	001-1	07/31/2015	Flow, in conduit or thru treatment plant	50050-1-0	Effluent Gross		NODI **8**		NODI **8**		MGD										N
KY0045390	Airview WWTF	Hardin	001-1	06/30/2015	Flow, in conduit or thru	50050-1-0	Effluent Gross		0.02548	MGD			MGD										N
KY0045390	Airview WWTF	Hardin	001-1	06/30/2015	Flow, in conduit or thru	50050-1-0	Effluent Gross				0.02791	MGD	MGD										N
KY0045390	Airview WWTF	Hardin	001-1	05/31/2015	Flow, in conduit or thru	50050-1-0	Effluent Gross		0.0191	MGD			MGD										N
KY0045390	Airview WWTF	Hardin	001-1	05/31/2015	Flow, in conduit or thru	50050-1-0	Effluent Gross				0.025	MGD	MGD										N
KY0045390	Airview WWTF	Hardin	001-1	04/30/2015	Flow, in conduit or thru	50050-1-0	Effluent Gross		0.02454	MGD			MGD										N
KY0045390	Airview WWTF	Hardin	001-1	04/30/2015	Flow, in conduit or thru	50050-1-0	Effluent Gross				0.028	MGD	MGD										N
KY0045390	Airview WWTF	Hardin	001-1	03/31/2015	Flow, in conduit or thru	50050-1-0	Effluent Gross		0.01742	MGD			MGD										N
KY0045390	Airview WWTF	Hardin	001-1	03/31/2015	Flow, in conduit or thru	50050-1-0	Effluent Gross				0.028	MGD	MGD										N
KY0045390	Airview WWTF	Hardin	001-1	02/28/2015	Flow, in conduit or thru	50050-1-0	Effluent Gross		0.026	MGD			MGD										N
KY0045390	Airview WWTF	Hardin	001-1	02/28/2015	Flow, in conduit or thru	50050-1-0	Effluent Gross				0.027	MGD	MGD										N
KY0045390	Airview WWTF	Hardin	001-1	01/31/2015	Flow, in conduit or thru	50050-1-0	Effluent Gross		0.0858	MGD			MGD										N
KY0045390	Airview WWTF	Hardin	001-1	01/31/2015	Flow, in conduit or thru	50050-1-0	Effluent Gross				0.858	MGD	MGD										N
KY0045390	Airview WWTF	Hardin	001-1	12/31/2014	Flow, in conduit or thru	50050-1-0	Effluent Gross		0.0234	MGD			MGD										N
KY0045390	Airview WWTF	Hardin	001-1	12/31/2014	Flow, in conduit or thru	50050-1-0	Effluent Gross				0.029	MGD	MGD										N
KY0045390	Airview WWTF	Hardin	001-1	11/30/2014	Flow, in conduit or thru treatment plant	50050-1-0	Effluent Gross		NODI **E**		NODI **E**		MGD										N
KY0045390	Airview WWTF	Hardin	001-1	10/31/2014	Flow, in conduit or thru treatment plant	50050-1-0	Effluent Gross		NODI **E**		NODI **E**		MGD										N
KY0045390	Airview WWTF	Hardin	001-1	09/30/2019	Chlorine, total residual	50060-1-0	Effluent Gross	536									0.07	mg/L			mg/L		Y
KY0045390	Airview WWTF	Hardin	001-1	09/30/2019	Chlorine, total residual	50060-1-0	Effluent Gross	268											0.07	mg/L	mg/L		Y
KY0045390	Airview WWTF	Hardin	001-1	08/31/2019	Chlorine, total residual	50060-1-0	Effluent Gross														mg/L		N
KY0045390	Airview WWTF	Hardin	001-1	07/31/2019	Chlorine, total residual	50060-1-0	Effluent Gross														mg/L		N
KY0045390	Airview WWTF	Hardin	001-1	06/30/2019	Chlorine, total residual	50060-1-0	Effluent Gross														mg/L		N
KY0045390	Airview WWTF	Hardin	001-1	05/31/2019	Chlorine, total residual	50060-1-0	Effluent Gross														mg/L		N
KY0045390	Airview WWTF	Hardin	001-1	04/30/2019	Chlorine, total residual	50060-1-0	Effluent Gross														mg/L		N
KY0045390	Airview WWTF	Hardin	001-1	03/31/2019	Chlorine, total residual	50060-1-0	Effluent Gross	5173									< .58	mg/L			mg/L		Y
KY0045390	Airview WWTF	Hardin	001-1	03/31/2019	Chlorine, total residual	50060-1-0	Effluent Gross	11479											2.2	mg/L	mg/L		Y
KY0045390	Airview WWTF	Hardin	001-1	02/28/2019	Chlorine, total residual	50060-1-0	Effluent Gross	9900									1.1	mg/L			mg/L		Y
KY0045390	Airview WWTF	Hardin	001-1	02/28/2019	Chlorine, total residual	50060-1-0	Effluent Gross	11479											2.2	mg/L	mg/L		Y
KY0045390	Airview WWTF	Hardin	001-1	01/31/2019	Chlorine, total residual	50060-1-0	Effluent Gross	12082									1.34	mg/L			mg/L		Y
KY0045390	Airview WWTF	Hardin	001-1	01/31/2019	Chlorine, total residual	50060-1-0	Effluent Gross	11479											2.2	mg/L	mg/L		Y
KY0045390	Airview WWTF	Hardin	001-1	12/31/2018	Chlorine, total residual	50060-1-0	Effluent Gross														mg/L		N
KY0045390	Airview WWTF	Hardin	001-1	11/30/2018	Chlorine, total residual	50060-1-0	Effluent Gross	19536									2.16	mg/L			mg/L		Y
KY0045390	Airview WWTF	Hardin	001-1	11/30/2018	Chlorine, total residual	50060-1-0	Effluent Gross	11479											2.2	mg/L	mg/L		Y
KY0045390	Airview WWTF	Hardin	001-1	10/31/2018	Chlorine, total residual	50060-1-0	Effluent Gross	19900									2.2	mg/L			mg/L		Y
KY0045390	Airview WWTF	Hardin	001-1	10/31/2018	Chlorine, total residual	50060-1-0	Effluent Gross	11479											2.2	mg/L	mg/L		Y
KY0045390	Airview WWTF	Hardin	001-1	09/30/2018	Chlorine, total residual	50060-1-0	Effluent Gross	14991									1.66	mg/L			mg/L		Y
KY0045390	Airview WWTF	Hardin	001-1	09/30/2018	Chlorine, total residual	50060-1-0	Effluent Gross	28847											5.5	mg/L	mg/L		Y
KY0045390	Airview WWTF	Hardin	001-1	08/31/2018	Chlorine, total residual	50060-1-0	Effluent Gross	19082									2.11	mg/L			mg/L		Y
KY0045390	Airview WWTF	Hardin	001-1	08/31/2018	Chlorine, total residual	50060-1-0	Effluent Gross	11005											2.11	mg/L	mg/L		Y
KY0045390	Airview WWTF	Hardin	001-1	07/31/2018	Chlorine, total residual	50060-1-0	Effluent Gross	19900									2.2	mg/L			mg/L		Y
KY0045390	Airview WWTF	Hardin	001-1	07/31/2018	Chlorine, total residual	50060-1-0	Effluent Gross	11479											2.2	mg/L	mg/L		Y
KY0045390	Airview WWTF	Hardin	001-1	06/30/2018	Chlorine, total residual	50060-1-0	Effluent Gross	14900									1.65	mg/L			mg/L		Y
KY0045390	Airview WWTF	Hardin	001-1	06/30/2018	Chlorine, total residual	50060-1-0	Effluent Gross	11479											2.2	mg/L	mg/L		Y
KY0045390	Airview WWTF	Hardin	001-1	05/31/2018	Chlorine, total residual	50060-1-0	Effluent Gross	8427									0.938	mg/L			mg/L		Y
KY0045390	Airview WWTF	Hardin	001-1	05/31/2018	Chlorine, total residual	50060-1-0	Effluent Gross	11479											2.2	mg/L	mg/L		Y
KY0045390	Airview WWTF	Hardin	001-1	04/30/2018	Chlorine, total residual	50060-1-0	Effluent Gross	5973									0.668	mg/L			mg/L		Y
KY0045390	Airview WWTF	Hardin	001-1	04/30/2018	Chlorine, total residual	50060-1-0	Effluent Gross	11479											2.2	mg/L	mg/L		Y
KY0045390	Airview WWTF	Hardin	001-1	03/31/2018	Chlorine, total residual	50060-1-0	Effluent Gross	10536									1.17	mg/L			mg/L		Y
KY0045390	Airview WWTF	Hardin	001-1	03/31/2018	Chlorine, total residual	50060-1-0	Effluent Gross	11479											2.2	mg/L	mg/L		Y
KY0045390	Airview WWTF	Hardin	001-1	02/28/2018	Chlorine, total residual	50060-1-0	Effluent Gross										NODI B		NODI B		mg/L		N
KY0045390	Airview WWTF	Hardin	001-1	01/31/2018	Chlorine, total residual	50060-1-0	Effluent Gross	19900									2.2	mg/L			mg/L		Y
KY0045390	Airview WWTF	Hardin	001-1	01/31/2018	Chlorine, total residual	50060-1-0	Effluent Gross	11479											2.2	mg/L	mg/L		Y
KY0045390	Airview WWTF	Hardin	001-1	12/31/2017	Chlorine, total residual	50060-1-0	Effluent Gross	19673									2.175	mg/L			mg/L		Y
KY0045390	Airview WWTF	Hardin	001-1	12/31/2017	Chlorine, total residual	50060-1-0	Effluent Gross	11479											2.2	mg/L	mg/L		Y
KY0045390	Airview WWTF	Hardin	001-1	11/30/2017	Chlorine, total residual	50060-1-0	Effluent Gross	12900									1.43	mg/L			mg/L		Y
KY0045390	Airview WWTF	Hardin	001-1	11/30/2017	Chlorine, total residual	50060-1-0	Effluent Gross	11479											2.2	mg/L	mg/L		Y
KY0045390	Airview WWTF	Hardin	001-1	10/31/2017	Chlorine, total residual	50060-1-0	Effluent Gross	6105									< .6825	mg/L			mg/L		Y
KY0045390	Airview WWTF	Hardin	001-1	10/31/2017	Chlorine, total residual	50060-1-0	Effluent Gross	10426											2	mg/L	mg/L		Y
KY0045390	Airview WWTF	Hardin	001-1	09/30/2017	Chlorine, total residual	50060-1-0	Effluent Gross	286									< .0425	mg/L			mg/L		Y
KY0045390	Airview WWTF	Hardin	001-1	09/30/2017	Chlorine, total residual	50060-1-0	Effluent Gross	584											0.13	mg/L	mg/L		Y
KY0045390	Airview WWTF	Hardin	001-1	08/31/2017	Chlorine, total residual	50060-1-0	Effluent Gross	3445									0.39	mg/L			mg/L		Y
KY0045390	Airview WWTF	Hardin	001-1	08/31/2017	Chlorine, total residual	50060-1-0	Effluent Gross	9900											1.9	mg/L	mg/L		Y
KY0045390	Airview WWTF	Hardin	001-1	07/31/2017	Chlorine, total residual	50060-1-0	Effluent Gross	13264									< 1.47	mg/L			mg/L		Y
KY0045390	Airview WWTF	Hardin	001-1	07/31/2017	Chlorine, total residual	50060-1-0	Effluent Gross	11479											2.2	mg/L	mg/L		Y
KY0045390	Airview WWTF	Hardin	001-1	06/30/2017	Chlorine, total residual	50060-1-0	Effluent Gross	13605									1.5075	mg/L			mg/L		Y
KY0045390	Airview WWTF	Hardin	001-1	06/30/2017	Chlorine, total residual	50060-1-0	Effluent Gross	11479											2.2	mg/L	mg/L		Y
KY0045390	Airview WWTF	Hardin	001-1	05/31/2017	Chlorine, total residual	50060-1-0	Effluent Gross	8791									< .978	mg/L			mg/L		Y
KY0045390	Airview WWTF	Hardin	001-1	05/31/2017	Chlorine, total residual	50060-1-0	Effluent Gross	11163											2.14	mg/L	mg/L		Y
KY0045390	Airview WWTF	Hardin	001-1	04/30/2017	Chlorine, total residual	50060-1-0	Effluent Gross	9264									< 1.03	mg/L			mg/L		Y
KY0045390	Airview WWTF	Hardin	001-1	04/30/2017	Chlorine, total residual	50060-1-0	Effluent Gross	11479											2.2	mg/L	mg/L		Y
KY0045390	Airview WWTF	Hardin	001-1	03/31/2017	Chlorine, total residual	50060-1-0	Effluent Gross	7627									0.85	mg/L			mg/L		Y
KY0045390	Airview WWTF	Hardin	001-1	03/31/2017	Chlorine, total residual	50060-1-0	Effluent Gross	6058											1.17	mg/L	mg/L		Y
KY0045390	Airview WWTF	Hardin	001-1	02/28/2017	Chlorine, total residual	50060-1-0	Effluent Gross	273									0.041	mg/L			mg/L		Y
KY0045390	Airview WWTF	Hardin	001-1	02/28/2017	Chlorine, total residual	50060-1-0	Effluent Gross	10268											1.97	mg/L	mg/L		Y
KY0045390	Airview WWTF	Hardin	001-1	01/31/2017	Chlorine, total residual	50060-1-0	Effluent Gross	9155									1.018	mg/L			mg/L		Y
KY0045390	Airview WWTF	Hardin	001-1	01/31/2017	Chlorine, total residual	50060-1-0	Effluent Gross	11479											2.2	mg/L	mg/L		Y
KY0045390	Airview WWTF	Hardin	001-1	12/31/2016	Chlorine, total residual	50060-1-0	Effluent Gross	19900									2.2	mg/L			mg/L		Y
KY0045390	Airview WWTF	Hardin	001-1	12/31/2016	Chlorine, total residual	50060-1-0	Effluent Gross	11479											2.2	mg/L	mg/L		Y
KY0045390	Airview WWTF	Hardin	001-1	11/30/2016	Chlorine, total residual	50060-1-0	Effluent Gross	209									0.034	mg/L			mg/L		Y

KY0045390	Airview WWTF	Hardin	001-1	11/30/2016	Chlorine, total residual	50060-1-0	Effluent Gross	479										0.11	mg/L	mg/L	Y
KY0045390	Airview WWTF	Hardin	001-1	10/31/2016	Chlorine, total residual	50060-1-0	Effluent Gross	9445								1.05	mg/L			mg/L	Y
KY0045390	Airview WWTF	Hardin	001-1	10/31/2016	Chlorine, total residual	50060-1-0	Effluent Gross	11479										2.2	mg/L	mg/L	Y
KY0045390	Airview WWTF	Hardin	001-1	09/30/2016	Chlorine, total residual	50060-1-0	Effluent Gross	19241								2.1275	mg/L			mg/L	Y
KY0045390	Airview WWTF	Hardin	001-1	09/30/2016	Chlorine, total residual	50060-1-0	Effluent Gross	11479										2.2	mg/L	mg/L	Y
KY0045390	Airview WWTF	Hardin	001-1	08/31/2016	Chlorine, total residual	50060-1-0	Effluent Gross	11809								1.31	mg/L			mg/L	Y
KY0045390	Airview WWTF	Hardin	001-1	08/31/2016	Chlorine, total residual	50060-1-0	Effluent Gross	11479										2.2	mg/L	mg/L	Y
KY0045390	Airview WWTF	Hardin	001-1	07/31/2016	Chlorine, total residual	50060-1-0	Effluent Gross	798								< .0988	mg/L			mg/L	Y
KY0045390	Airview WWTF	Hardin	001-1	07/31/2016	Chlorine, total residual	50060-1-0	Effluent Gross	11479										2.2	mg/L	mg/L	Y
KY0045390	Airview WWTF	Hardin	001-1	06/30/2016	Chlorine, total residual	50060-1-0	Effluent Gross	11991								1.33	mg/L			mg/L	Y
KY0045390	Airview WWTF	Hardin	001-1	06/30/2016	Chlorine, total residual	50060-1-0	Effluent Gross	11479										2.2	mg/L	mg/L	Y
KY0045390	Airview WWTF	Hardin	001-1	05/31/2016	Chlorine, total residual	50060-1-0	Effluent Gross	14445								1.6	mg/L			mg/L	Y
KY0045390	Airview WWTF	Hardin	001-1	05/31/2016	Chlorine, total residual	50060-1-0	Effluent Gross	11479										2.2	mg/L	mg/L	Y
KY0045390	Airview WWTF	Hardin	001-1	04/30/2016	Chlorine, total residual	50060-1-0	Effluent Gross	3355								0.38	mg/L			mg/L	Y
KY0045390	Airview WWTF	Hardin	001-1	04/30/2016	Chlorine, total residual	50060-1-0	Effluent Gross	7584										1.46	mg/L	mg/L	Y
KY0045390	Airview WWTF	Hardin	001-1	03/31/2016	Chlorine, total residual	50060-1-0	Effluent Gross	6973								< .778	mg/L			mg/L	Y
KY0045390	Airview WWTF	Hardin	001-1	03/31/2016	Chlorine, total residual	50060-1-0	Effluent Gross	11479										2.2	mg/L	mg/L	Y
KY0045390	Airview WWTF	Hardin	001-1	02/29/2016	Chlorine, total residual	50060-1-0	Effluent Gross	14900								1.65	mg/L			mg/L	Y
KY0045390	Airview WWTF	Hardin	001-1	02/29/2016	Chlorine, total residual	50060-1-0	Effluent Gross	11479										2.2	mg/L	mg/L	Y
KY0045390	Airview WWTF	Hardin	001-1	01/31/2016	Chlorine, total residual	50060-1-0	Effluent Gross	10173								1.13	mg/L			mg/L	Y
KY0045390	Airview WWTF	Hardin	001-1	01/31/2016	Chlorine, total residual	50060-1-0	Effluent Gross	11479										2.2	mg/L	mg/L	Y
KY0045390	Airview WWTF	Hardin	001-1	12/31/2015	Chlorine, total residual	50060-1-0	Effluent Gross	11573								1.284	mg/L			mg/L	Y
KY0045390	Airview WWTF	Hardin	001-1	12/31/2015	Chlorine, total residual	50060-1-0	Effluent Gross	9584										1.84	mg/L	mg/L	Y
KY0045390	Airview WWTF	Hardin	001-1	11/30/2015	Chlorine, total residual	50060-1-0	Effluent Gross	15673								1.735	mg/L			mg/L	Y
KY0045390	Airview WWTF	Hardin	001-1	11/30/2015	Chlorine, total residual	50060-1-0	Effluent Gross	11479										2.2	mg/L	mg/L	Y
KY0045390	Airview WWTF	Hardin	001-1	10/31/2015	Chlorine, total residual	50060-1-0	Effluent Gross	11627								1.29	mg/L			mg/L	Y
KY0045390	Airview WWTF	Hardin	001-1	10/31/2015	Chlorine, total residual	50060-1-0	Effluent Gross	11479										2.2	mg/L	mg/L	Y
KY0045390	Airview WWTF	Hardin	001-1	09/30/2015	Chlorine, total residual	50060-1-0	Effluent Gross	1445								0.17	mg/L			mg/L	Y
KY0045390	Airview WWTF	Hardin	001-1	09/30/2015	Chlorine, total residual	50060-1-0	Effluent Gross	2795										0.55	mg/L	mg/L	Y
KY0045390	Airview WWTF	Hardin	001-1	08/31/2015	Chlorine, total residual	50060-1-0	Effluent Gross	991								0.12	mg/L			mg/L	Y
KY0045390	Airview WWTF	Hardin	001-1	08/31/2015	Chlorine, total residual	50060-1-0	Effluent Gross	2005										0.4	mg/L	mg/L	Y
KY0045390	Airview WWTF	Hardin	001-1	07/31/2015	Chlorine, total residual	50060-1-0	Effluent Gross									NODI **8**		NODI **8**		mg/L	N
KY0045390	Airview WWTF	Hardin	001-1	06/30/2015	Chlorine, total residual	50060-1-0	Effluent Gross	2150								0.2475	mg/L			mg/L	Y
KY0045390	Airview WWTF	Hardin	001-1	06/30/2015	Chlorine, total residual	50060-1-0	Effluent Gross	4479										0.87	mg/L	mg/L	Y
KY0045390	Airview WWTF	Hardin	001-1	05/31/2015	Chlorine, total residual	50060-1-0	Effluent Gross	1482								0.174	mg/L			mg/L	Y
KY0045390	Airview WWTF	Hardin	001-1	05/31/2015	Chlorine, total residual	50060-1-0	Effluent Gross	4163										0.81	mg/L	mg/L	Y
KY0045390	Airview WWTF	Hardin	001-1	04/30/2015	Chlorine, total residual	50060-1-0	Effluent Gross									< .01	mg/L			mg/L	N
KY0045390	Airview WWTF	Hardin	001-1	04/30/2015	Chlorine, total residual	50060-1-0	Effluent Gross	5										0.02	mg/L	mg/L	Y
KY0045390	Airview WWTF	Hardin	001-1	03/31/2015	Chlorine, total residual	50060-1-0	Effluent Gross	5991								0.67	mg/L			mg/L	Y
KY0045390	Airview WWTF	Hardin	001-1	03/31/2015	Chlorine, total residual	50060-1-0	Effluent Gross	10216										1.96	mg/L	mg/L	Y
KY0045390	Airview WWTF	Hardin	001-1	02/28/2015	Chlorine, total residual	50060-1-0	Effluent Gross	19900								2.2	mg/L			mg/L	Y
KY0045390	Airview WWTF	Hardin	001-1	02/28/2015	Chlorine, total residual	50060-1-0	Effluent Gross	8663										1.665	mg/L	mg/L	Y
KY0045390	Airview WWTF	Hardin	001-1	01/31/2015	Chlorine, total residual	50060-1-0	Effluent Gross	18882								2.088	mg/L			mg/L	Y
KY0045390	Airview WWTF	Hardin	001-1	01/31/2015	Chlorine, total residual	50060-1-0	Effluent Gross	13058										2.5	mg/L	mg/L	Y
KY0045390	Airview WWTF	Hardin	001-1	12/31/2014	Chlorine, total residual	50060-1-0	Effluent Gross	2900								0.33	mg/L			mg/L	Y
KY0045390	Airview WWTF	Hardin	001-1	12/31/2014	Chlorine, total residual	50060-1-0	Effluent Gross	4637										0.9	mg/L	mg/L	Y
KY0045390	Airview WWTF	Hardin	001-1	11/30/2014	Chlorine, total residual	50060-1-0	Effluent Gross									NODI **E**		NODI **E**		mg/L	N
KY0045390	Airview WWTF	Hardin	001-1	10/31/2014	Chlorine, total residual	50060-1-0	Effluent Gross									NODI **E**		NODI **E**		mg/L	N
KY0045390	Airview WWTF	Hardin	001-1	09/30/2019	E. coli	51040-1-0	Effluent Gross	46054								60000	#/100mL			#/100mL	Y
KY0045390	Airview WWTF	Hardin	001-1	09/30/2019	E. coli	51040-1-0	Effluent Gross	24900										60000	#/100mL	#/100mL	Y
KY0045390	Airview WWTF	Hardin	001-1	08/31/2019	E. coli	51040-1-0	Effluent Gross													#/100mL	N
KY0045390	Airview WWTF	Hardin	001-1	07/31/2019	E. coli	51040-1-0	Effluent Gross													#/100mL	N
KY0045390	Airview WWTF	Hardin	001-1	06/30/2019	E. coli	51040-1-0	Effluent Gross													#/100mL	N
KY0045390	Airview WWTF	Hardin	001-1	05/31/2019	E. coli	51040-1-0	Effluent Gross													#/100mL	N
KY0045390	Airview WWTF	Hardin	001-1	04/30/2019	E. coli	51040-1-0	Effluent Gross													#/100mL	N
KY0045390	Airview WWTF	Hardin	001-1	03/31/2019	E. coli	51040-1-0	Effluent Gross	17268								22578	#/100mL			#/100mL	Y
KY0045390	Airview WWTF	Hardin	001-1	03/31/2019	E. coli	51040-1-0	Effluent Gross	24900										60000	#/100mL	#/100mL	Y
KY0045390	Airview WWTF	Hardin	001-1	02/28/2019	E. coli	51040-1-0	Effluent Gross	1855								2542	#/100mL			#/100mL	Y
KY0045390	Airview WWTF	Hardin	001-1	02/28/2019	E. coli	51040-1-0	Effluent Gross	24900										60000	#/100mL	#/100mL	Y
KY0045390	Airview WWTF	Hardin	001-1	01/31/2019	E. coli	51040-1-0	Effluent Gross	3183								4268	#/100mL			#/100mL	Y
KY0045390	Airview WWTF	Hardin	001-1	01/31/2019	E. coli	51040-1-0	Effluent Gross	24900										60000	#/100mL	#/100mL	Y
KY0045390	Airview WWTF	Hardin	001-1	12/31/2018	E. coli	51040-1-0	Effluent Gross													#/100mL	N
KY0045390	Airview WWTF	Hardin	001-1	11/30/2018	E. coli	51040-1-0	Effluent Gross	18927								24735	#/100mL			#/100mL	Y
KY0045390	Airview WWTF	Hardin	001-1	11/30/2018	E. coli	51040-1-0	Effluent Gross	24900										60000	#/100mL	#/100mL	Y
KY0045390	Airview WWTF	Hardin	001-1	10/31/2018	E. coli	51040-1-0	Effluent Gross									2	#/100mL			#/100mL	N
KY0045390	Airview WWTF	Hardin	001-1	10/31/2018	E. coli	51040-1-0	Effluent Gross											8	#/100mL	#/100mL	N
KY0045390	Airview WWTF	Hardin	001-1	09/30/2018	E. coli	51040-1-0	Effluent Gross	680								1014	#/100mL			#/100mL	Y
KY0045390	Airview WWTF	Hardin	001-1	09/30/2018	E. coli	51040-1-0	Effluent Gross	24900										60000	#/100mL	#/100mL	Y
KY0045390	Airview WWTF	Hardin	001-1	08/31/2018	E. coli	51040-1-0	Effluent Gross									91	#/100mL			#/100mL	N
KY0045390	Airview WWTF	Hardin	001-1	08/31/2018	E. coli	51040-1-0	Effluent Gross	24900										60000	#/100mL	#/100mL	Y
KY0045390	Airview WWTF	Hardin	001-1	07/31/2018	E. coli	51040-1-0	Effluent Gross									9	#/100mL			#/100mL	N
KY0045390	Airview WWTF	Hardin	001-1	07/31/2018	E. coli	51040-1-0	Effluent Gross											15	#/100mL	#/100mL	N
KY0045390	Airview WWTF	Hardin	001-1	06/30/2018	E. coli	51040-1-0	Effluent Gross	1727								2375	#/100mL			#/100mL	Y
KY0045390	Airview WWTF	Hardin	001-1	06/30/2018	E. coli	51040-1-0	Effluent Gross	24900										60000	#/100mL	#/100mL	Y
KY0045390	Airview WWTF	Hardin	001-1	05/31/2018	E. coli	51040-1-0	Effluent Gross	78								231	#/100mL			#/100mL	Y
KY0045390	Airview WWTF	Hardin	001-1	05/31/2018	E. coli	51040-1-0	Effluent Gross	24900										60000	#/100mL	#/100mL	Y
KY0045390	Airview WWTF	Hardin	001-1	04/30/2018	E. coli	51040-1-0	Effluent Gross	46054								60000	#/100mL			#/100mL	Y
KY0045390	Airview WWTF	Hardin	001-1	04/30/2018	E. coli	51040-1-0	Effluent Gross	24900										60000	#/100mL	#/100mL	Y
KY0045390	Airview WWTF	Hardin	001-1	03/31/2018	E. coli	51040-1-0	Effluent Gross									120	#/100mL			#/100mL	N
KY0045390	Airview WWTF	Hardin	001-1	03/31/2018	E. coli	51040-1-0	Effluent Gross	24900										60000	#/100mL	#/100mL	Y
KY0045390	Airview WWTF	Hardin	001-1	02/28/2018	E. coli	51040-1-0	Effluent Gross	46054								60000	#/100mL			#/100mL	Y
KY0045390	Airview WWTF	Hardin	001-1	02/28/2018	E. coli	51040-1-0	Effluent Gross	24900										60000	#/100mL	#/100mL	Y
KY0045390	Airview WWTF	Hardin	001-1	01/31/2018	E. coli	51040-1-0	Effluent Gross									3	#/100mL			#/100mL	N
KY0045390	Airview WWTF	Hardin	001-1	01/31/2018	E. coli	51040-1-0	Effluent Gross											14	#/100mL	#/100mL	N
KY0045390	Airview WWTF	Hardin	001-1	12/31/2017	E. coli	51040-1-0	Effluent Gross									4	#/100mL			#/100mL	N
KY0045390	Airview WWTF	Hardin	001-1	12/31/2017	E. coli	51040-1-0	Effluent Gross											17	#/100mL	#/100mL	N
KY0045390	Airview WWTF	Hardin	001-1	11/30/2017	E. coli	51040-1-0	Effluent Gross	464								733	#/100mL			#/100mL	Y
KY0045390	Airview WWTF	Hardin	001-1	11/30/2017	E. coli	51040-1-0	Effluent Gross	24900										60000	#/100mL	#/100mL	Y
KY0045390	Airview WWTF	Hardin	001-1	10/31/2017	E. coli	51040-1-0	Effluent Gross	1432								1992	#/100mL			#/100mL	Y
KY0045390	Airview WWTF	Hardin	001-1	10/31/2017	E. coli	51040-1-0	Effluent Gross	24900										60000	#/100mL	#/100mL	Y
KY0045390	Airview WWTF	Hardin	001-1	09/30/2017	E. coli	51040-1-0	Effluent Gross	46054								60000	#/100mL			#/100mL	Y
KY0045390	Airview WWTF	Hardin	001-1	09/30/2017	E. coli	51040-1-0	Effluent Gross	24900										60000	#/100mL	#/100mL	Y
KY0045390	Airview WWTF	Hardin	001-1	08/31/2017	E. coli	51040-1-0	Effluent Gross	46054								60000	#/100mL			#/100mL	Y
KY0045390	Airview WWTF	Hardin	001-1	08/31/2017	E. coli	51040-1-0	Effluent Gross	24900										60000	#/100mL	#/100mL	Y
KY0045390	Airview WWTF	Hardin	001-1	07/31/2017	E. coli	51040-1-0	Effluent Gross	193								381	#/100mL			#/100mL	Y
KY0045390	Airview WWTF	Hardin	001-1	07/31/2017	E. coli	51040-1-0	Effluent Gross	24900										60000	#/100mL	#/100mL	Y
KY0045390	Airview WWTF	Hardin	001-1	06/30/2017	E. coli	51040-1-0	Effluent Gross									32	#/100mL			#/100mL	N
KY0045390	Airview WWTF	Hardin	001-1	06/30/2017	E. coli	51040-1-0	Effluent Gross	24900										60000	#/100mL	#/100mL	Y
KY0045390	Airview WWTF	Hardin	001-1	05/31/2017	E. coli	51040-1-0	Effluent Gross	1690								2327	#/100mL			#/100mL	Y
KY0045390	Airview WWTF	Hardin	001-1	05/31/2017	E. coli	51040-1-0	Effluent Gross	24900										60000	#/100mL	#/100mL	Y
KY0045390	Airview WWTF	Hardin	001-1	04/30/2017	E. coli	51040-1-0	Effluent Gross	965								1385	#/100mL			#/100mL	Y
KY0045390	Airview WWTF	Hardin	001-1	04/30/2017	E. coli	51040-1-0	Effluent Gross	24900										60000	#/100mL	#/100mL	Y
KY0045390	Airview WWTF	Hardin	001-1	03/31/2017	E. coli	51040-1-0	Effluent Gross	46054								60000	#/100mL			#/100mL	Y
KY0045390	Airview WWTF	Hardin	001-1	03/31/2017	E. coli	51040-1-0	Effluent Gross	2										245	#/100mL	#/100mL	Y
KY0045390	Airview WWTF	Hardin	001-1	02/28/2017	E. coli	51040-1-0	Effluent Gross	6546								8640	#/100mL			#/100mL	Y
KY0045390	Airview WWTF	Hardin	001-1	02/28/2017	E. coli	51040-1-0	Effluent Gross	24900										60000	#/100mL	#/100mL	Y
KY0045390	Airview WWTF	Hardin	001-1	01/31/2017	E. coli	51040-1-0	Effluent Gross	1968								2689	#/100mL			#/100mL	Y
KY0045390	Airview WWTF	Hardin	001-1	01/31/2017	E. coli	51040-1-0	Effluent Gross	24900										60000	#/100mL	#/100mL	Y
KY0045390	Airview WWTF	Hardin	001-1	12/31/2016	E. coli	51040-1-0	Effluent Gross									10	#/100mL			#/100mL	N
KY0045390	Airview WWTF	Hardin	001-1	12/31/2016	E. coli	51040-1-0	Effluent Gross	908										2420	#/100mL	#/100mL	Y
KY0045390	Airview WWTF	Hardin	001-1	11/30/2016	E. coli	51040-1-0	Effluent Gross	29								168	#/100mL			#/100mL	Y
KY0045390	Airview WWTF	Hardin	001-1	11/30/2016	E. coli	51040-1-0	Effluent Gross	24900										60000	#/100mL	#/100mL	Y
KY0045390	Airview WWTF	Hardin	001-1	10/31/2016	E. coli	51040-1-0	Effluent Gross	62								211	#/100mL			#/100mL	Y
KY0045390	Airview WWTF	Hardin	001-1	10/31/2016	E. coli	51040-1-0	Effluent Gross	24900										60000	#/100mL	#/100mL	Y

KY0045390	Airview WWTF	Hardin	001-1	09/30/2016	E. coli	51040-1-0	Effluent Gross	88								245	#/100mL			#/100mL	Y
KY0045390	Airview WWTF	Hardin	001-1	09/30/2016	E. coli	51040-1-0	Effluent Gross	24900										60000	#/100mL	#/100mL	Y
KY0045390	Airview WWTF	Hardin	001-1	08/31/2016	E. coli	51040-1-0	Effluent Gross	50								195	#/100mL			#/100mL	Y
KY0045390	Airview WWTF	Hardin	001-1	08/31/2016	E. coli	51040-1-0	Effluent Gross	24900										60000	#/100mL	#/100mL	Y
KY0045390	Airview WWTF	Hardin	001-1	07/31/2016	E. coli	51040-1-0	Effluent Gross	2849								3834	#/100mL			#/100mL	Y
KY0045390	Airview WWTF	Hardin	001-1	07/31/2016	E. coli	51040-1-0	Effluent Gross	24900										60000	#/100mL	#/100mL	Y
KY0045390	Airview WWTF	Hardin	001-1	06/30/2016	E. coli	51040-1-0	Effluent Gross	665								995	#/100mL			#/100mL	Y
KY0045390	Airview WWTF	Hardin	001-1	06/30/2016	E. coli	51040-1-0	Effluent Gross	24900										60000	#/100mL	#/100mL	Y
KY0045390	Airview WWTF	Hardin	001-1	05/31/2016	E. coli	51040-1-0	Effluent Gross	46054								60000	#/100mL			#/100mL	Y
KY0045390	Airview WWTF	Hardin	001-1	05/31/2016	E. coli	51040-1-0	Effluent Gross	24900										60000	#/100mL	#/100mL	Y
KY0045390	Airview WWTF	Hardin	001-1	04/30/2016	E. coli	51040-1-0	Effluent Gross	46054								60000	#/100mL			#/100mL	Y
KY0045390	Airview WWTF	Hardin	001-1	04/30/2016	E. coli	51040-1-0	Effluent Gross	24900										60000	#/100mL	#/100mL	Y
KY0045390	Airview WWTF	Hardin	001-1	03/31/2016	E. coli	51040-1-0	Effluent Gross	259								467	#/100mL			#/100mL	Y
KY0045390	Airview WWTF	Hardin	001-1	03/31/2016	E. coli	51040-1-0	Effluent Gross	24900										60000	#/100mL	#/100mL	Y
KY0045390	Airview WWTF	Hardin	001-1	02/29/2016	E. coli	51040-1-0	Effluent Gross	195								384	#/100mL			#/100mL	Y
KY0045390	Airview WWTF	Hardin	001-1	02/29/2016	E. coli	51040-1-0	Effluent Gross	24900										60000	#/100mL	#/100mL	Y
KY0045390	Airview WWTF	Hardin	001-1	01/31/2016	E. coli	51040-1-0	Effluent Gross	142								314	#/100mL			#/100mL	Y
KY0045390	Airview WWTF	Hardin	001-1	01/31/2016	E. coli	51040-1-0	Effluent Gross	24900										60000	#/100mL	#/100mL	Y
KY0045390	Airview WWTF	Hardin	001-1	12/31/2015	E. coli	51040-1-0	Effluent Gross	2015								2749	#/100mL			#/100mL	Y
KY0045390	Airview WWTF	Hardin	001-1	12/31/2015	E. coli	51040-1-0	Effluent Gross	24900										60000	#/100mL	#/100mL	Y
KY0045390	Airview WWTF	Hardin	001-1	11/30/2015	E. coli	51040-1-0	Effluent Gross	878								1272	#/100mL			#/100mL	Y
KY0045390	Airview WWTF	Hardin	001-1	11/30/2015	E. coli	51040-1-0	Effluent Gross	24900										60000	#/100mL	#/100mL	Y
KY0045390	Airview WWTF	Hardin	001-1	10/31/2015	E. coli	51040-1-0	Effluent Gross	1375								1917	#/100mL			#/100mL	Y
KY0045390	Airview WWTF	Hardin	001-1	10/31/2015	E. coli	51040-1-0	Effluent Gross	24900										60000	#/100mL	#/100mL	Y
KY0045390	Airview WWTF	Hardin	001-1	09/30/2015	E. coli	51040-1-0	Effluent Gross	3788								5055	#/100mL			#/100mL	Y
KY0045390	Airview WWTF	Hardin	001-1	09/30/2015	E. coli	51040-1-0	Effluent Gross	24900										60000	#/100mL	#/100mL	Y
KY0045390	Airview WWTF	Hardin	001-1	08/31/2015	E. coli	51040-1-0	Effluent Gross	46054								60000	#/100mL			#/100mL	Y
KY0045390	Airview WWTF	Hardin	001-1	08/31/2015	E. coli	51040-1-0	Effluent Gross	24900										60000	#/100mL	#/100mL	Y
KY0045390	Airview WWTF	Hardin	001-1	07/31/2015	E. coli	51040-1-0	Effluent Gross									NODI **8**		NODI **8**		#/100mL	N
KY0045390	Airview WWTF	Hardin	001-1	06/30/2015	E. coli	51040-1-0	Effluent Gross	17268								22578	#/100mL			#/100mL	Y
KY0045390	Airview WWTF	Hardin	001-1	06/30/2015	E. coli	51040-1-0	Effluent Gross	24900										60000	#/100mL	#/100mL	Y
KY0045390	Airview WWTF	Hardin	001-1	05/31/2015	E. coli	51040-1-0	Effluent Gross	1762								2420	#/100mL			#/100mL	Y
KY0045390	Airview WWTF	Hardin	001-1	05/31/2015	E. coli	51040-1-0	Effluent Gross	908										2420	#/100mL	#/100mL	Y
KY0045390	Airview WWTF	Hardin	001-1	04/30/2015	E. coli	51040-1-0	Effluent Gross	46054								60000	#/100mL			#/100mL	Y
KY0045390	Airview WWTF	Hardin	001-1	04/30/2015	E. coli	51040-1-0	Effluent Gross	24900										60000	#/100mL	#/100mL	Y
KY0045390	Airview WWTF	Hardin	001-1	03/31/2015	E. coli	51040-1-0	Effluent Gross	46054								60000	#/100mL			#/100mL	Y
KY0045390	Airview WWTF	Hardin	001-1	03/31/2015	E. coli	51040-1-0	Effluent Gross	24900										60000	#/100mL	#/100mL	Y
KY0045390	Airview WWTF	Hardin	001-1	02/28/2015	E. coli	51040-1-0	Effluent Gross	7173								9455	#/100mL			#/100mL	Y
KY0045390	Airview WWTF	Hardin	001-1	02/28/2015	E. coli	51040-1-0	Effluent Gross	24900										60000	#/100mL	#/100mL	Y
KY0045390	Airview WWTF	Hardin	001-1	01/31/2015	E. coli	51040-1-0	Effluent Gross									103	#/100mL			#/100mL	N
KY0045390	Airview WWTF	Hardin	001-1	01/31/2015	E. coli	51040-1-0	Effluent Gross	908										2420	#/100mL	#/100mL	Y
KY0045390	Airview WWTF	Hardin	001-1	12/31/2014	E. coli	51040-1-0	Effluent Gross	1762								2420	#/100mL			#/100mL	Y
KY0045390	Airview WWTF	Hardin	001-1	12/31/2014	E. coli	51040-1-0	Effluent Gross	908										2420	#/100mL	#/100mL	Y
KY0045390	Airview WWTF	Hardin	001-1	11/30/2014	E. coli	51040-1-0	Effluent Gross									NODI **E**		NODI **E**		#/100mL	N
KY0045390	Airview WWTF	Hardin	001-1	10/31/2014	E. coli	51040-1-0	Effluent Gross									NODI **E**		NODI **E**		#/100mL	N
KY0045390	Airview WWTF	Hardin	001-1	09/30/2019	BOD, carbonaceous [5 day,	80082-1-0	Effluent Gross		7.389	lb/d			lb/d								N
KY0045390	Airview WWTF	Hardin	001-1	09/30/2019	BOD, carbonaceous [5 day,	80082-1-0	Effluent Gross				7.389	lb/d	lb/d								N
KY0045390	Airview WWTF	Hardin	001-1	09/30/2019	BOD, carbonaceous [5 day,	80082-1-0	Effluent Gross									18	mg/L			mg/L	N
KY0045390	Airview WWTF	Hardin	001-1	09/30/2019	BOD, carbonaceous [5 day,	80082-1-0	Effluent Gross											18	mg/L	mg/L	N
KY0045390	Airview WWTF	Hardin	001-1	08/31/2019	BOD, carbonaceous [5 day,	80082-1-0	Effluent Gross						lb/d								N
KY0045390	Airview WWTF	Hardin	001-1	08/31/2019	BOD, carbonaceous [5 day,	80082-1-0	Effluent Gross													mg/L	N
KY0045390	Airview WWTF	Hardin	001-1	07/31/2019	BOD, carbonaceous [5 day,	80082-1-0	Effluent Gross						lb/d								N
KY0045390	Airview WWTF	Hardin	001-1	07/31/2019	BOD, carbonaceous [5 day,	80082-1-0	Effluent Gross													mg/L	N
KY0045390	Airview WWTF	Hardin	001-1	06/30/2019	BOD, carbonaceous [5 day,	80082-1-0	Effluent Gross						lb/d								N
KY0045390	Airview WWTF	Hardin	001-1	06/30/2019	BOD, carbonaceous [5 day,	80082-1-0	Effluent Gross													mg/L	N
KY0045390	Airview WWTF	Hardin	001-1	05/31/2019	BOD, carbonaceous [5 day,	80082-1-0	Effluent Gross						lb/d								N
KY0045390	Airview WWTF	Hardin	001-1	05/31/2019	BOD, carbonaceous [5 day,	80082-1-0	Effluent Gross													mg/L	N
KY0045390	Airview WWTF	Hardin	001-1	04/30/2019	BOD, carbonaceous [5 day,	80082-1-0	Effluent Gross						lb/d								N
KY0045390	Airview WWTF	Hardin	001-1	03/31/2019	BOD, carbonaceous [5 day,	80082-1-0	Effluent Gross		11	lb/d			lb/d								N
KY0045390	Airview WWTF	Hardin	001-1	03/31/2019	BOD, carbonaceous [5 day,	80082-1-0	Effluent Gross	22			21	lb/d	lb/d								Y
KY0045390	Airview WWTF	Hardin	001-1	03/31/2019	BOD, carbonaceous [5 day,	80082-1-0	Effluent Gross	276								94	mg/L			mg/L	Y
KY0045390	Airview WWTF	Hardin	001-1	03/31/2019	BOD, carbonaceous [5 day,	80082-1-0	Effluent Gross	353										170	mg/L	mg/L	Y
KY0045390	Airview WWTF	Hardin	001-1	02/28/2019	BOD, carbonaceous [5 day,	80082-1-0	Effluent Gross		< 8	lb/d			lb/d								N
KY0045390	Airview WWTF	Hardin	001-1	02/28/2019	BOD, carbonaceous [5 day,	80082-1-0	Effluent Gross				16	lb/d	lb/d								N
KY0045390	Airview WWTF	Hardin	001-1	02/28/2019	BOD, carbonaceous [5 day,	80082-1-0	Effluent Gross	28								< 32	mg/L			mg/L	Y
KY0045390	Airview WWTF	Hardin	001-1	02/28/2019	BOD, carbonaceous [5 day,	80082-1-0	Effluent Gross	108										78	mg/L	mg/L	Y
KY0045390	Airview WWTF	Hardin	001-1	01/31/2019	BOD, carbonaceous [5 day,	80082-1-0	Effluent Gross		< 4	lb/d			lb/d								N
KY0045390	Airview WWTF	Hardin	001-1	01/31/2019	BOD, carbonaceous [5 day,	80082-1-0	Effluent Gross				9	lb/d	lb/d								N
KY0045390	Airview WWTF	Hardin	001-1	01/31/2019	BOD, carbonaceous [5 day,	80082-1-0	Effluent Gross									< 17	mg/L			mg/L	N
KY0045390	Airview WWTF	Hardin	001-1	01/31/2019	BOD, carbonaceous [5 day,	80082-1-0	Effluent Gross	1										38	mg/L	mg/L	Y
KY0045390	Airview WWTF	Hardin	001-1	12/31/2018	BOD, carbonaceous [5 day,	80082-1-0	Effluent Gross						lb/d								N
KY0045390	Airview WWTF	Hardin	001-1	12/31/2018	BOD, carbonaceous [5 day,	80082-1-0	Effluent Gross													mg/L	N
KY0045390	Airview WWTF	Hardin	001-1	11/30/2018	BOD, carbonaceous [5 day,	80082-1-0	Effluent Gross		10	lb/d			lb/d								N
KY0045390	Airview WWTF	Hardin	001-1	11/30/2018	BOD, carbonaceous [5 day,	80082-1-0	Effluent Gross	51			26	lb/d	lb/d								Y
KY0045390	Airview WWTF	Hardin	001-1	11/30/2018	BOD, carbonaceous [5 day,	80082-1-0	Effluent Gross	84								46	mg/L			mg/L	Y
KY0045390	Airview WWTF	Hardin	001-1	11/30/2018	BOD, carbonaceous [5 day,	80082-1-0	Effluent Gross	193										110	mg/L	mg/L	Y
KY0045390	Airview WWTF	Hardin	001-1	10/31/2018	BOD, carbonaceous [5 day,	80082-1-0	Effluent Gross		2	lb/d			lb/d								N
KY0045390	Airview WWTF	Hardin	001-1	10/31/2018	BOD, carbonaceous [5 day,	80082-1-0	Effluent Gross				4	lb/d	lb/d								N
KY0045390	Airview WWTF	Hardin	001-1	10/31/2018	BOD, carbonaceous [5 day,	80082-1-0	Effluent Gross									7	mg/L			mg/L	N
KY0045390	Airview WWTF	Hardin	001-1	10/31/2018	BOD, carbonaceous [5 day,	80082-1-0	Effluent Gross											9	mg/L	mg/L	N
KY0045390	Airview WWTF	Hardin	001-1	09/30/2018	BOD, carbonaceous [5 day,	80082-1-0	Effluent Gross		9	lb/d			lb/d								N
KY0045390	Airview WWTF	Hardin	001-1	09/30/2018	BOD, carbonaceous [5 day,	80082-1-0	Effluent Gross	51			26	lb/d	lb/d								Y
KY0045390	Airview WWTF	Hardin	001-1	09/30/2018	BOD, carbonaceous [5 day,	80082-1-0	Effluent Gross	52								38	mg/L			mg/L	Y
KY0045390	Airview WWTF	Hardin	001-1	09/30/2018	BOD, carbonaceous [5 day,	80082-1-0	Effluent Gross	156										96	mg/L	mg/L	Y
KY0045390	Airview WWTF	Hardin	001-1	08/31/2018	BOD, carbonaceous [5 day,	80082-1-0	Effluent Gross		6	lb/d			lb/d								N
KY0045390	Airview WWTF	Hardin	001-1	08/31/2018	BOD, carbonaceous [5 day,	80082-1-0	Effluent Gross				9	lb/d	lb/d								N
KY0045390	Airview WWTF	Hardin	001-1	08/31/2018	BOD, carbonaceous [5 day,	80082-1-0	Effluent Gross	16								29	mg/L			mg/L	Y
KY0045390	Airview WWTF	Hardin	001-1	08/31/2018	BOD, carbonaceous [5 day,	80082-1-0	Effluent Gross	71										64	mg/L	mg/L	Y
KY0045390	Airview WWTF	Hardin	001-1	07/31/2018	BOD, carbonaceous [5 day,	80082-1-0	Effluent Gross		< 8	lb/d			lb/d								N
KY0045390	Airview WWTF	Hardin	001-1	07/31/2018	BOD, carbonaceous [5 day,	80082-1-0	Effluent Gross	62			28	lb/d	lb/d								Y
KY0045390	Airview WWTF	Hardin	001-1	07/31/2018	BOD, carbonaceous [5 day,	80082-1-0	Effluent Gross	60								< 40	mg/L			mg/L	Y
KY0045390	Airview WWTF	Hardin	001-1	07/31/2018	BOD, carbonaceous [5 day,	80082-1-0	Effluent Gross	273										140	mg/L	mg/L	Y
KY0045390	Airview WWTF	Hardin	001-1	06/30/2018	BOD, carbonaceous [5 day,	80082-1-0	Effluent Gross		9	lb/d			lb/d								N
KY0045390	Airview WWTF	Hardin	001-1	06/30/2018	BOD, carbonaceous [5 day,	80082-1-0	Effluent Gross	51			26	lb/d	lb/d								Y
KY0045390	Airview WWTF	Hardin	001-1	06/30/2018	BOD, carbonaceous [5 day,	80082-1-0	Effluent Gross									16	mg/L			mg/L	N
KY0045390	Airview WWTF	Hardin	001-1	06/30/2018	BOD, carbonaceous [5 day,	80082-1-0	Effluent Gross	7										40	mg/L	mg/L	Y
KY0045390	Airview WWTF	Hardin	001-1	05/31/2018	BOD, carbonaceous [5 day,	80082-1-0	Effluent Gross		< 4	lb/d			lb/d								N
KY0045390	Airview WWTF	Hardin	001-1	05/31/2018	BOD, carbonaceous [5 day,	80082-1-0	Effluent Gross				10	lb/d	lb/d								N
KY0045390	Airview WWTF	Hardin	001-1	05/31/2018	BOD, carbonaceous [5 day,	80082-1-0	Effluent Gross									16	mg/L			mg/L	N
KY0045390	Airview WWTF	Hardin	001-1	05/31/2018	BOD, carbonaceous [5 day,	80082-1-0	Effluent Gross	23										46	mg/L	mg/L	Y
KY0045390	Airview WWTF	Hardin	001-1	04/30/2018	BOD, carbonaceous [5 day,	80082-1-0	Effluent Gross		7	lb/d			lb/d								N
KY0045390	Airview WWTF	Hardin	001-1	04/30/2018	BOD, carbonaceous [5 day,	80082-1-0	Effluent Gross	4			18	lb/d	lb/d								Y
KY0045390	Airview WWTF	Hardin	001-1	04/30/2018	BOD, carbonaceous [5 day,	80082-1-0	Effluent Gross	36								34	mg/L			mg/L	Y
KY0045390	Airview WWTF	Hardin	001-1	04/30/2018	BOD, carbonaceous [5 day,	80082-1-0	Effluent Gross	143										91	mg/L	mg/L	Y
KY0045390	Airview WWTF	Hardin	001-1	03/31/2018	BOD, carbonaceous [5 day,	80082-1-0	Effluent Gross		< 5	lb/d			lb/d								N
KY0045390	Airview WWTF	Hardin	001-1	03/31/2018	BOD, carbonaceous [5 day,	80082-1-0	Effluent Gross				8	lb/d	lb/d								N
KY0045390	Airview WWTF	Hardin	001-1	03/31/2018	BOD, carbonaceous [5 day,	80082-1-0	Effluent Gross									< 20	mg/L			mg/L	N
KY0045390	Airview WWTF	Hardin	001-1	03/31/2018	BOD, carbonaceous [5 day,	80082-1-0	Effluent Gross											36	mg/L	mg/L	N
KY0045390	Airview WWTF	Hardin	001-1	02/28/2018	BOD, carbonaceous [5 day,	80082-1-0	Effluent Gross	48	< 17	lb/d			lb/d								Y
KY0045390	Airview WWTF	Hardin	001-1	02/28/2018	BOD, carbonaceous [5 day,	80082-1-0	Effluent Gross	132			40	lb/d	lb/d								Y
KY0045390	Airview WWTF	Hardin	001-1	02/28/2018	BOD, carbonaceous [5 day,	80082-1-0	Effluent Gross	224								< 81	mg/L			mg/L	Y
KY0045390	Airview WWTF	Hardin	001-1	02/28/2018	BOD, carbonaceous [5 day,	80082-1-0	Effluent Gross	433										200	mg/L	mg/L	Y
KY0045390	Airview WWTF	Hardin	001-1	01/31/2018	BOD, carbonaceous [5 day,	80082-1-0	Effluent Gross	83	< 21	lb/d			lb/d								Y

KY0045390	Airview WWTF	Hardin	001-1	01/31/2018	BOD, carbonaceous [5 day,	80082-1-0	Effluent Gross	317			72	lb/d	lb/d							Y
KY0045390	Airview WWTF	Hardin	001-1	01/31/2018	BOD, carbonaceous [5 day,	80082-1-0	Effluent Gross									< 17	mg/L			N
KY0045390	Airview WWTF	Hardin	001-1	01/31/2018	BOD, carbonaceous [5 day,	80082-1-0	Effluent Gross											35	mg/L	mg/L	N
KY0045390	Airview WWTF	Hardin	001-1	12/31/2017	BOD, carbonaceous [5 day,	80082-1-0	Effluent Gross		< 3	lb/d			lb/d							N
KY0045390	Airview WWTF	Hardin	001-1	12/31/2017	BOD, carbonaceous [5 day,	80082-1-0	Effluent Gross				3	lb/d	lb/d							N
KY0045390	Airview WWTF	Hardin	001-1	12/31/2017	BOD, carbonaceous [5 day,	80082-1-0	Effluent Gross									< 11	mg/L			N
KY0045390	Airview WWTF	Hardin	001-1	12/31/2017	BOD, carbonaceous [5 day,	80082-1-0	Effluent Gross											16	mg/L	mg/L	N
KY0045390	Airview WWTF	Hardin	001-1	11/30/2017	BOD, carbonaceous [5 day,	80082-1-0	Effluent Gross		< 6	lb/d			lb/d							N
KY0045390	Airview WWTF	Hardin	001-1	11/30/2017	BOD, carbonaceous [5 day,	80082-1-0	Effluent Gross				16	lb/d	lb/d							N
KY0045390	Airview WWTF	Hardin	001-1	11/30/2017	BOD, carbonaceous [5 day,	80082-1-0	Effluent Gross	24								< 31	mg/L			Y
KY0045390	Airview WWTF	Hardin	001-1	11/30/2017	BOD, carbonaceous [5 day,	80082-1-0	Effluent Gross	105										77	mg/L	Y
KY0045390	Airview WWTF	Hardin	001-1	10/31/2017	BOD, carbonaceous [5 day,	80082-1-0	Effluent Gross		8	lb/d			lb/d							N
KY0045390	Airview WWTF	Hardin	001-1	10/31/2017	BOD, carbonaceous [5 day,	80082-1-0	Effluent Gross				15	lb/d	lb/d							N
KY0045390	Airview WWTF	Hardin	001-1	10/31/2017	BOD, carbonaceous [5 day,	80082-1-0	Effluent Gross	48								37	mg/L			Y
KY0045390	Airview WWTF	Hardin	001-1	10/31/2017	BOD, carbonaceous [5 day,	80082-1-0	Effluent Gross	89										71	mg/L	Y
KY0045390	Airview WWTF	Hardin	001-1	09/30/2017	BOD, carbonaceous [5 day,	80082-1-0	Effluent Gross		< 8	lb/d			lb/d							N
KY0045390	Airview WWTF	Hardin	001-1	09/30/2017	BOD, carbonaceous [5 day,	80082-1-0	Effluent Gross	10			19	lb/d	lb/d							Y
KY0045390	Airview WWTF	Hardin	001-1	09/30/2017	BOD, carbonaceous [5 day,	80082-1-0	Effluent Gross	32								< 33	mg/L			Y
KY0045390	Airview WWTF	Hardin	001-1	09/30/2017	BOD, carbonaceous [5 day,	80082-1-0	Effluent Gross	76										66	mg/L	Y
KY0045390	Airview WWTF	Hardin	001-1	08/31/2017	BOD, carbonaceous [5 day,	80082-1-0	Effluent Gross		< 1	lb/d			lb/d							N
KY0045390	Airview WWTF	Hardin	001-1	08/31/2017	BOD, carbonaceous [5 day,	80082-1-0	Effluent Gross				< 1	lb/d	lb/d							N
KY0045390	Airview WWTF	Hardin	001-1	08/31/2017	BOD, carbonaceous [5 day,	80082-1-0	Effluent Gross									< 6	mg/L			N
KY0045390	Airview WWTF	Hardin	001-1	08/31/2017	BOD, carbonaceous [5 day,	80082-1-0	Effluent Gross											8	mg/L	N
KY0045390	Airview WWTF	Hardin	001-1	07/31/2017	BOD, carbonaceous [5 day,	80082-1-0	Effluent Gross		6	lb/d			lb/d							N
KY0045390	Airview WWTF	Hardin	001-1	07/31/2017	BOD, carbonaceous [5 day,	80082-1-0	Effluent Gross				14	lb/d	lb/d							N
KY0045390	Airview WWTF	Hardin	001-1	07/31/2017	BOD, carbonaceous [5 day,	80082-1-0	Effluent Gross	20								30	mg/L			Y
KY0045390	Airview WWTF	Hardin	001-1	07/31/2017	BOD, carbonaceous [5 day,	80082-1-0	Effluent Gross	71										64	mg/L	Y
KY0045390	Airview WWTF	Hardin	001-1	06/30/2017	BOD, carbonaceous [5 day,	80082-1-0	Effluent Gross		< 4	lb/d			lb/d							N
KY0045390	Airview WWTF	Hardin	001-1	06/30/2017	BOD, carbonaceous [5 day,	80082-1-0	Effluent Gross				< 4	lb/d	lb/d							N
KY0045390	Airview WWTF	Hardin	001-1	06/30/2017	BOD, carbonaceous [5 day,	80082-1-0	Effluent Gross									< 16	mg/L			N
KY0045390	Airview WWTF	Hardin	001-1	06/30/2017	BOD, carbonaceous [5 day,	80082-1-0	Effluent Gross	12										42	mg/L	Y
KY0045390	Airview WWTF	Hardin	001-1	05/31/2017	BOD, carbonaceous [5 day,	80082-1-0	Effluent Gross		< 6	lb/d			lb/d							N
KY0045390	Airview WWTF	Hardin	001-1	05/31/2017	BOD, carbonaceous [5 day,	80082-1-0	Effluent Gross	4			18	lb/d	lb/d							Y
KY0045390	Airview WWTF	Hardin	001-1	05/31/2017	BOD, carbonaceous [5 day,	80082-1-0	Effluent Gross	4								< 26	mg/L			Y
KY0045390	Airview WWTF	Hardin	001-1	05/31/2017	BOD, carbonaceous [5 day,	80082-1-0	Effluent Gross	100										75	mg/L	Y
KY0045390	Airview WWTF	Hardin	001-1	04/30/2017	BOD, carbonaceous [5 day,	80082-1-0	Effluent Gross		3	lb/d			lb/d							N
KY0045390	Airview WWTF	Hardin	001-1	04/30/2017	BOD, carbonaceous [5 day,	80082-1-0	Effluent Gross				5	lb/d	lb/d							N
KY0045390	Airview WWTF	Hardin	001-1	04/30/2017	BOD, carbonaceous [5 day,	80082-1-0	Effluent Gross									< 12	mg/L			N
KY0045390	Airview WWTF	Hardin	001-1	04/30/2017	BOD, carbonaceous [5 day,	80082-1-0	Effluent Gross											16	mg/L	N
KY0045390	Airview WWTF	Hardin	001-1	03/31/2017	BOD, carbonaceous [5 day,	80082-1-0	Effluent Gross		< 4	lb/d			lb/d							N
KY0045390	Airview WWTF	Hardin	001-1	03/31/2017	BOD, carbonaceous [5 day,	80082-1-0	Effluent Gross				8	lb/d	lb/d							N
KY0045390	Airview WWTF	Hardin	001-1	03/31/2017	BOD, carbonaceous [5 day,	80082-1-0	Effluent Gross									< 14	mg/L			N
KY0045390	Airview WWTF	Hardin	001-1	03/31/2017	BOD, carbonaceous [5 day,	80082-1-0	Effluent Gross											18	mg/L	N
KY0045390	Airview WWTF	Hardin	001-1	02/28/2017	BOD, carbonaceous [5 day,	80082-1-0	Effluent Gross		< 2	lb/d			lb/d							N
KY0045390	Airview WWTF	Hardin	001-1	02/28/2017	BOD, carbonaceous [5 day,	80082-1-0	Effluent Gross				2	lb/d	lb/d							N
KY0045390	Airview WWTF	Hardin	001-1	02/28/2017	BOD, carbonaceous [5 day,	80082-1-0	Effluent Gross									< 10	mg/L			N
KY0045390	Airview WWTF	Hardin	001-1	02/28/2017	BOD, carbonaceous [5 day,	80082-1-0	Effluent Gross											18	mg/L	N
KY0045390	Airview WWTF	Hardin	001-1	01/31/2017	BOD, carbonaceous [5 day,	80082-1-0	Effluent Gross		3	lb/d			lb/d							N
KY0045390	Airview WWTF	Hardin	001-1	01/31/2017	BOD, carbonaceous [5 day,	80082-1-0	Effluent Gross				5	lb/d	lb/d							N
KY0045390	Airview WWTF	Hardin	001-1	01/31/2017	BOD, carbonaceous [5 day,	80082-1-0	Effluent Gross									21	mg/L			N
KY0045390	Airview WWTF	Hardin	001-1	01/31/2017	BOD, carbonaceous [5 day,	80082-1-0	Effluent Gross											30	mg/L	N
KY0045390	Airview WWTF	Hardin	001-1	12/31/2016	BOD, carbonaceous [5 day,	80082-1-0	Effluent Gross		< 5	lb/d			lb/d							N
KY0045390	Airview WWTF	Hardin	001-1	12/31/2016	BOD, carbonaceous [5 day,	80082-1-0	Effluent Gross				9	lb/d	lb/d							N
KY0045390	Airview WWTF	Hardin	001-1	12/31/2016	BOD, carbonaceous [5 day,	80082-1-0	Effluent Gross									< 14	mg/L			N
KY0045390	Airview WWTF	Hardin	001-1	12/31/2016	BOD, carbonaceous [5 day,	80082-1-0	Effluent Gross											25	mg/L	N
KY0045390	Airview WWTF	Hardin	001-1	11/30/2016	BOD, carbonaceous [5 day,	80082-1-0	Effluent Gross		< 1	lb/d			lb/d							N
KY0045390	Airview WWTF	Hardin	001-1	11/30/2016	BOD, carbonaceous [5 day,	80082-1-0	Effluent Gross				1	lb/d	lb/d							N
KY0045390	Airview WWTF	Hardin	001-1	11/30/2016	BOD, carbonaceous [5 day,	80082-1-0	Effluent Gross									< 10	mg/L			N
KY0045390	Airview WWTF	Hardin	001-1	10/31/2016	BOD, carbonaceous [5 day,	80082-1-0	Effluent Gross		9	lb/d			lb/d							N
KY0045390	Airview WWTF	Hardin	001-1	10/31/2016	BOD, carbonaceous [5 day,	80082-1-0	Effluent Gross	68			29	lb/d	lb/d							Y
KY0045390	Airview WWTF	Hardin	001-1	10/31/2016	BOD, carbonaceous [5 day,	80082-1-0	Effluent Gross	108								52	mg/L			Y
KY0045390	Airview WWTF	Hardin	001-1	10/31/2016	BOD, carbonaceous [5 day,	80082-1-0	Effluent Gross	300										150	mg/L	Y
KY0045390	Airview WWTF	Hardin	001-1	09/30/2016	BOD, carbonaceous [5 day,	80082-1-0	Effluent Gross		9	lb/d			lb/d							N
KY0045390	Airview WWTF	Hardin	001-1	09/30/2016	BOD, carbonaceous [5 day,	80082-1-0	Effluent Gross				14	lb/d	lb/d							N
KY0045390	Airview WWTF	Hardin	001-1	09/30/2016	BOD, carbonaceous [5 day,	80082-1-0	Effluent Gross	4								26	mg/L			Y
KY0045390	Airview WWTF	Hardin	001-1	09/30/2016	BOD, carbonaceous [5 day,	80082-1-0	Effluent Gross	57										59	mg/L	Y
KY0045390	Airview WWTF	Hardin	001-1	08/31/2016	BOD, carbonaceous [5 day,	80082-1-0	Effluent Gross		5	lb/d			lb/d							N
KY0045390	Airview WWTF	Hardin	001-1	08/31/2016	BOD, carbonaceous [5 day,	80082-1-0	Effluent Gross				7	lb/d	lb/d							N
KY0045390	Airview WWTF	Hardin	001-1	08/31/2016	BOD, carbonaceous [5 day,	80082-1-0	Effluent Gross									24	mg/L			N
KY0045390	Airview WWTF	Hardin	001-1	08/31/2016	BOD, carbonaceous [5 day,	80082-1-0	Effluent Gross											35	mg/L	N
KY0045390	Airview WWTF	Hardin	001-1	07/31/2016	BOD, carbonaceous [5 day,	80082-1-0	Effluent Gross	22	14	lb/d			lb/d							Y
KY0045390	Airview WWTF	Hardin	001-1	07/31/2016	BOD, carbonaceous [5 day,	80082-1-0	Effluent Gross	114			37	lb/d	lb/d							Y
KY0045390	Airview WWTF	Hardin	001-1	07/31/2016	BOD, carbonaceous [5 day,	80082-1-0	Effluent Gross	160								65	mg/L			Y
KY0045390	Airview WWTF	Hardin	001-1	07/31/2016	BOD, carbonaceous [5 day,	80082-1-0	Effluent Gross	327										160	mg/L	Y
KY0045390	Airview WWTF	Hardin	001-1	06/30/2016	BOD, carbonaceous [5 day,	80082-1-0	Effluent Gross		8	lb/d			lb/d							N
KY0045390	Airview WWTF	Hardin	001-1	06/30/2016	BOD, carbonaceous [5 day,	80082-1-0	Effluent Gross	33			23	lb/d	lb/d							Y
KY0045390	Airview WWTF	Hardin	001-1	06/30/2016	BOD, carbonaceous [5 day,	80082-1-0	Effluent Gross	60								40	mg/L			Y
KY0045390	Airview WWTF	Hardin	001-1	06/30/2016	BOD, carbonaceous [5 day,	80082-1-0	Effluent Gross	193										110	mg/L	Y
KY0045390	Airview WWTF	Hardin	001-1	05/31/2016	BOD, carbonaceous [5 day,	80082-1-0	Effluent Gross	30	15	lb/d			lb/d							Y
KY0045390	Airview WWTF	Hardin	001-1	05/31/2016	BOD, carbonaceous [5 day,	80082-1-0	Effluent Gross	16			20	lb/d	lb/d							Y
KY0045390	Airview WWTF	Hardin	001-1	05/31/2016	BOD, carbonaceous [5 day,	80082-1-0	Effluent Gross	200								75	mg/L			Y
KY0045390	Airview WWTF	Hardin	001-1	05/31/2016	BOD, carbonaceous [5 day,	80082-1-0	Effluent Gross	161										98	mg/L	Y
KY0045390	Airview WWTF	Hardin	001-1	04/30/2016	BOD, carbonaceous [5 day,	80082-1-0	Effluent Gross		6	lb/d			lb/d							N
KY0045390	Airview WWTF	Hardin	001-1	04/30/2016	BOD, carbonaceous [5 day,	80082-1-0	Effluent Gross				10	lb/d	lb/d							N
KY0045390	Airview WWTF	Hardin	001-1	04/30/2016	BOD, carbonaceous [5 day,	80082-1-0	Effluent Gross									23	mg/L			N
KY0045390	Airview WWTF	Hardin	001-1	04/30/2016	BOD, carbonaceous [5 day,	80082-1-0	Effluent Gross	7										40	mg/L	Y
KY0045390	Airview WWTF	Hardin	001-1	03/31/2016	BOD, carbonaceous [5 day,	80082-1-0	Effluent Gross		6	lb/d			lb/d							N
KY0045390	Airview WWTF	Hardin	001-1	03/31/2016	BOD, carbonaceous [5 day,	80082-1-0	Effluent Gross	10			19	lb/d	lb/d							Y
KY0045390	Airview WWTF	Hardin	001-1	03/31/2016	BOD, carbonaceous [5 day,	80082-1-0	Effluent Gross	12								28	mg/L			Y
KY0045390	Airview WWTF	Hardin	001-1	03/31/2016	BOD, carbonaceous [5 day,	80082-1-0	Effluent Gross	100										75	mg/L	Y
KY0045390	Airview WWTF	Hardin	001-1	02/29/2016	BOD, carbonaceous [5 day,	80082-1-0	Effluent Gross		< 6	lb/d			lb/d							N
KY0045390	Airview WWTF	Hardin	001-1	02/29/2016	BOD, carbonaceous [5 day,	80082-1-0	Effluent Gross				10	lb/d	lb/d							N
KY0045390	Airview WWTF	Hardin	001-1	02/29/2016	BOD, carbonaceous [5 day,	80082-1-0	Effluent Gross									< 24	mg/L			N
KY0045390	Airview WWTF	Hardin	001-1	02/29/2016	BOD, carbonaceous [5 day,	80082-1-0	Effluent Gross	20										45	mg/L	Y
KY0045390	Airview WWTF	Hardin	001-1	01/31/2016	BOD, carbonaceous [5 day,	80082-1-0	Effluent Gross		< 2	lb/d			lb/d							N
KY0045390	Airview WWTF	Hardin	001-1	01/31/2016	BOD, carbonaceous [5 day,	80082-1-0	Effluent Gross				2	lb/d	lb/d							N
KY0045390	Airview WWTF	Hardin	001-1	01/31/2016	BOD, carbonaceous [5 day,	80082-1-0	Effluent Gross									< 7	mg/L			N
KY0045390	Airview WWTF	Hardin	001-1	01/31/2016	BOD, carbonaceous [5 day,	80082-1-0	Effluent Gross											11	mg/L	N
KY0045390	Airview WWTF	Hardin	001-1	12/31/2015	BOD, carbonaceous [5 day,	80082-1-0	Effluent Gross		7	lb/d			lb/d							N
KY0045390	Airview WWTF	Hardin	001-1	12/31/2015	BOD, carbonaceous [5 day,	80082-1-0	Effluent Gross				12	lb/d	lb/d							N
KY0045390	Airview WWTF	Hardin	001-1	12/31/2015	BOD, carbonaceous [5 day,	80082-1-0	Effluent Gross	24								31	mg/L			Y
KY0045390	Airview WWTF	Hardin	001-1	12/31/2015	BOD, carbonaceous [5 day,	80082-1-0	Effluent Gross	52										57	mg/L	Y
KY0045390	Airview WWTF	Hardin	001-1	11/30/2015	BOD, carbonaceous [5 day,	80082-1-0	Effluent Gross		4	lb/d			lb/d							N
KY0045390	Airview WWTF	Hardin	001-1	11/30/2015	BOD, carbonaceous [5 day,	80082-1-0	Effluent Gross				9	lb/d	lb/d							N
KY0045390	Airview WWTF	Hardin	001-1	11/30/2015	BOD, carbonaceous [5 day,	80082-1-0	Effluent Gross									19	mg/L			N
KY0045390	Airview WWTF	Hardin	001-1	11/30/2015	BOD, carbonaceous [5 day,	80082-1-0	Effluent Gross	12										42	mg/L	Y
KY0045390	Airview WWTF	Hardin	001-1	10/31/2015	BOD, carbonaceous [5 day,	80082-1-0	Effluent Gross		10	lb/d			lb/d							N
KY0045390	Airview WWTF	Hardin	001-1	10/31/2015	BOD, carbonaceous [5 day,	80082-1-0	Effluent Gross	4			18	lb/d	lb/d							Y
KY0045390	Airview WWTF	Hardin	001-1	10/31/2015	BOD, carbonaceous [5 day,	80082-1-0	Effluent Gross	44								36	mg/L			Y
KY0045390	Airview WWTF	Hardin	001-1	10/31/2015	BOD, carbonaceous [5 day,	80082-1-0	Effluent Gross	105										77	mg/L	Y
KY0045390	Airview WWTF	Hardin	001-1	09/30/2015	BOD, carbonaceous [5 day,	80082-1-0	Effluent Gross		6	lb/d			lb/d							N
KY0045390	Airview WWTF	Hardin	001-1	09/30/2015	BOD, carbonaceous [5 day,	80082-1-0	Effluent Gross				16	lb/d	lb/d							N
KY0045390	Airview WWTF	Hardin	001-1	09/30/2015	BOD, carbonaceous [5 day,	80082-1-0	Effluent Gross									15	mg/L			N

KY0045390	Airview WWTF	Hardin	001-1	09/30/2015	BOD, carbonaceous [5 day,	80082-1-0	Effluent Gross											19	mg/L	mg/L	N
KY0045390	Airview WWTF	Hardin	001-1	08/31/2015	BOD, carbonaceous [5 day,	80082-1-0	Effluent Gross		< 3.36	lb/d			lb/d								N
KY0045390	Airview WWTF	Hardin	001-1	08/31/2015	BOD, carbonaceous [5 day,	80082-1-0	Effluent Gross				7	lb/d	lb/d								N
KY0045390	Airview WWTF	Hardin	001-1	08/31/2015	BOD, carbonaceous [5 day,	80082-1-0	Effluent Gross									< 19	mg/L			mg/L	N
KY0045390	Airview WWTF	Hardin	001-1	08/31/2015	BOD, carbonaceous [5 day,	80082-1-0	Effluent Gross											31	mg/L	mg/L	N
KY0045390	Airview WWTF	Hardin	001-1	07/31/2015	BOD, carbonaceous [5 day, 20 C]	80082-1-0	Effluent Gross		NODI **8**		NODI **8**		lb/d								N
KY0045390	Airview WWTF	Hardin	001-1	07/31/2015	BOD, carbonaceous [5 day,	80082-1-0	Effluent Gross									NODI **8**		NODI **8**		mg/L	N
KY0045390	Airview WWTF	Hardin	001-1	06/30/2015	BOD, carbonaceous [5 day,	80082-1-0	Effluent Gross		6	lb/d			lb/d								N
KY0045390	Airview WWTF	Hardin	001-1	06/30/2015	BOD, carbonaceous [5 day,	80082-1-0	Effluent Gross				12	lb/d	lb/d								N
KY0045390	Airview WWTF	Hardin	001-1	06/30/2015	BOD, carbonaceous [5 day,	80082-1-0	Effluent Gross	24								31	mg/L			mg/L	Y
KY0045390	Airview WWTF	Hardin	001-1	06/30/2015	BOD, carbonaceous [5 day,	80082-1-0	Effluent Gross	68										63	mg/L	mg/L	Y
KY0045390	Airview WWTF	Hardin	001-1	05/31/2015	BOD, carbonaceous [5 day,	80082-1-0	Effluent Gross	48	17	lb/d			lb/d								Y
KY0045390	Airview WWTF	Hardin	001-1	05/31/2015	BOD, carbonaceous [5 day,	80082-1-0	Effluent Gross				17	lb/d	lb/d								N
KY0045390	Airview WWTF	Hardin	001-1	05/31/2015	BOD, carbonaceous [5 day,	80082-1-0	Effluent Gross	16								29	mg/L			mg/L	Y
KY0045390	Airview WWTF	Hardin	001-1	05/31/2015	BOD, carbonaceous [5 day,	80082-1-0	Effluent Gross											29	mg/L	mg/L	N
KY0045390	Airview WWTF	Hardin	001-1	04/30/2015	BOD, carbonaceous [5 day,	80082-1-0	Effluent Gross		9	lb/d			lb/d								N
KY0045390	Airview WWTF	Hardin	001-1	04/30/2015	BOD, carbonaceous [5 day,	80082-1-0	Effluent Gross				9	lb/d	lb/d								N
KY0045390	Airview WWTF	Hardin	001-1	04/30/2015	BOD, carbonaceous [5 day,	80082-1-0	Effluent Gross	92								48	mg/L			mg/L	Y
KY0045390	Airview WWTF	Hardin	001-1	04/30/2015	BOD, carbonaceous [5 day,	80082-1-0	Effluent Gross	28										48	mg/L	mg/L	Y
KY0045390	Airview WWTF	Hardin	001-1	03/31/2015	BOD, carbonaceous [5 day,	80082-1-0	Effluent Gross		10	lb/d			lb/d								N
KY0045390	Airview WWTF	Hardin	001-1	03/31/2015	BOD, carbonaceous [5 day,	80082-1-0	Effluent Gross	10			19	lb/d	lb/d								Y
KY0045390	Airview WWTF	Hardin	001-1	03/31/2015	BOD, carbonaceous [5 day,	80082-1-0	Effluent Gross	168								67	mg/L			mg/L	Y
KY0045390	Airview WWTF	Hardin	001-1	03/31/2015	BOD, carbonaceous [5 day,	80082-1-0	Effluent Gross	247										130	mg/L	mg/L	Y
KY0045390	Airview WWTF	Hardin	001-1	02/28/2015	BOD, carbonaceous [5 day,	80082-1-0	Effluent Gross	30	15	lb/d			lb/d								Y
KY0045390	Airview WWTF	Hardin	001-1	02/28/2015	BOD, carbonaceous [5 day,	80082-1-0	Effluent Gross	10			19	lb/d	lb/d								Y
KY0045390	Airview WWTF	Hardin	001-1	02/28/2015	BOD, carbonaceous [5 day,	80082-1-0	Effluent Gross	180								70	mg/L			mg/L	Y
KY0045390	Airview WWTF	Hardin	001-1	02/28/2015	BOD, carbonaceous [5 day,	80082-1-0	Effluent Gross	129										86	mg/L	mg/L	Y
KY0045390	Airview WWTF	Hardin	001-1	01/31/2015	BOD, carbonaceous [5 day,	80082-1-0	Effluent Gross	265	42	lb/d			lb/d								Y
KY0045390	Airview WWTF	Hardin	001-1	01/31/2015	BOD, carbonaceous [5 day,	80082-1-0	Effluent Gross	677			134	lb/d	lb/d								Y
KY0045390	Airview WWTF	Hardin	001-1	01/31/2015	BOD, carbonaceous [5 day,	80082-1-0	Effluent Gross	132								58	mg/L			mg/L	Y
KY0045390	Airview WWTF	Hardin	001-1	01/31/2015	BOD, carbonaceous [5 day,	80082-1-0	Effluent Gross	167										100	mg/L	mg/L	Y
KY0045390	Airview WWTF	Hardin	001-1	12/31/2014	BOD, carbonaceous [5 day,	80082-1-0	Effluent Gross	22	14	lb/d			lb/d								Y
KY0045390	Airview WWTF	Hardin	001-1	12/31/2014	BOD, carbonaceous [5 day,	80082-1-0	Effluent Gross	39			24	lb/d	lb/d								Y
KY0045390	Airview WWTF	Hardin	001-1	12/31/2014	BOD, carbonaceous [5 day,	80082-1-0	Effluent Gross	168								67	mg/L			mg/L	Y
KY0045390	Airview WWTF	Hardin	001-1	12/31/2014	BOD, carbonaceous [5 day,	80082-1-0	Effluent Gross	161										98	mg/L	mg/L	Y
KY0045390	Airview WWTF	Hardin	001-1	11/30/2014	BOD, carbonaceous [5 day, 20 C]	80082-1-0	Effluent Gross		NODI **E**		NODI **E**		lb/d								N
KY0045390	Airview WWTF	Hardin	001-1	11/30/2014	BOD, carbonaceous [5 day,	80082-1-0	Effluent Gross									NODI **E**		NODI **E**		mg/L	N
KY0045390	Airview WWTF	Hardin	001-1	10/31/2014	BOD, carbonaceous [5 day, 20 C]	80082-1-0	Effluent Gross		NODI **E**		NODI **E**		lb/d								N
KY0045390	Airview WWTF	Hardin	001-1	10/31/2014	BOD, carbonaceous [5 day,	80082-1-0	Effluent Gross									NODI **E**		NODI **E**		mg/L	N

Non-Receipt Vio. Exists	DMR Received Date
N	10/28/2019
Y	
Y	
Y	
Y	
Y	
N	4/25/2019
N	3/26/2019
N	2/26/2019
Y	
Y	1/28/2019
Y	12/31/2018
Y	12/31/2018
N	9/28/2018
N	8/27/2018
N	7/27/2018
N	6/28/2018
Y	9/6/2018
N	4/27/2018
N	3/28/2018
N	2/28/2018
N	1/26/2018
N	12/28/2017
N	11/27/2017
N	10/26/2017
N	9/28/2017
N	8/28/2017
N	7/27/2017
N	6/23/2017
N	5/24/2017
N	4/27/2017
N	3/27/2017
N	2/28/2017
N	1/27/2017
N	12/28/2016
N	11/27/2016
N	10/28/2016
N	9/28/2016
N	8/26/2016
N	7/28/2016
Y	9/1/2016
N	5/27/2016
N	4/28/2016
N	3/28/2016
N	2/25/2016
N	1/27/2016
N	12/28/2015
N	11/29/2015
N	10/28/2015
N	9/28/2015
Y	8/26/2015
N	7/23/2015
N	6/30/2015
N	5/28/2015
N	4/28/2015
N	3/27/2015
N	2/27/2015
N	1/28/2015
Y	7/2/2015
Y	7/2/2015
N	10/28/2019
N	10/28/2019
Y	
Y	
Y	
Y	
Y	
N	4/25/2019
N	4/25/2019
N	3/26/2019
N	3/26/2019
N	2/26/2019
N	2/26/2019
Y	
Y	1/28/2019
Y	1/28/2019
Y	12/31/2018
Y	12/31/2018
Y	12/31/2018
Y	12/31/2018
N	9/28/2018
N	9/28/2018
N	8/27/2018
N	8/27/2018
N	7/27/2018
N	7/27/2018
N	6/28/2018
N	6/28/2018
Y	9/6/2018
Y	9/6/2018
N	4/27/2018
N	4/27/2018
N	3/28/2018
N	3/28/2018
N	2/28/2018
N	2/28/2018
N	1/26/2018
N	1/26/2018
N	12/28/2017
N	12/28/2017
N	11/27/2017
N	11/27/2017
N	10/26/2017
N	10/26/2017
N	9/28/2017
N	9/28/2017
N	8/28/2017
N	8/28/2017
N	7/27/2017
N	7/27/2017

N	6/23/2017
N	6/23/2017
N	5/24/2017
N	5/24/2017
N	4/27/2017
N	4/27/2017
N	3/27/2017
N	3/27/2017
N	2/28/2017
N	2/28/2017
N	1/27/2017
N	1/27/2017
N	12/28/2016
N	12/28/2016
N	11/27/2016
N	11/27/2016
N	10/28/2016
N	10/28/2016
N	9/28/2016
N	9/28/2016
N	8/26/2016
N	8/26/2016
N	7/28/2016
N	7/28/2016
Y	9/1/2016
Y	9/1/2016
N	5/27/2016
N	5/27/2016
N	4/28/2016
N	4/28/2016
N	3/28/2016
N	3/28/2016
N	2/25/2016
N	2/25/2016
N	1/27/2016
N	1/27/2016
N	12/28/2015
N	12/28/2015
N	11/29/2015
N	11/29/2015
N	10/28/2015
N	10/28/2015
N	9/28/2015
N	9/28/2015
Y	8/26/2015
N	7/23/2015
N	7/23/2015
N	6/30/2015
N	6/30/2015
N	5/28/2015
N	5/28/2015
N	4/28/2015
N	4/28/2015
N	3/27/2015
N	3/27/2015
N	2/27/2015
N	2/27/2015
N	1/28/2015
N	1/28/2015
N	2/27/2015
N	2/27/2015
N	1/28/2015
N	1/28/2015
Y	7/2/2015
Y	7/2/2015
N	10/28/2019
N	10/28/2019
N	10/28/2019
N	10/28/2019
Y	
Y	
Y	
Y	
Y	
Y	
Y	
Y	
Y	
Y	
N	4/25/2019
N	4/25/2019
N	4/25/2019
N	4/25/2019
N	3/26/2019
N	3/26/2019
N	3/26/2019
N	3/26/2019
N	2/26/2019
N	2/26/2019
N	2/26/2019
N	2/26/2019
Y	
Y	
Y	1/28/2019
Y	1/28/2019
Y	1/28/2019
Y	1/28/2019
Y	12/31/2018
Y	12/31/2018
Y	12/31/2018
Y	12/31/2018
Y	12/31/2018
Y	12/31/2018
Y	12/31/2018
Y	12/31/2018
N	9/28/2018
N	9/28/2018
N	9/28/2018
N	9/28/2018
N	8/27/2018
N	8/27/2018
N	8/27/2018
N	8/27/2018
N	7/27/2018
N	7/27/2018
N	7/27/2018
N	7/27/2018
N	6/28/2018

N	6/28/2018
N	6/28/2018
N	6/28/2018
Y	9/6/2018
Y	9/6/2018
Y	9/6/2018
Y	9/6/2018
N	4/27/2018
N	4/27/2018
N	4/27/2018
N	4/27/2018
N	3/28/2018
N	3/28/2018
N	3/28/2018
N	3/28/2018
N	2/28/2018
N	2/28/2018
N	2/28/2018
N	2/28/2018
N	1/26/2018
N	1/26/2018
N	1/26/2018
N	1/26/2018
N	12/28/2017
N	12/28/2017
N	12/28/2017
N	12/28/2017
N	11/27/2017
N	11/27/2017
N	11/27/2017
N	11/27/2017
N	10/26/2017
N	10/26/2017
N	10/26/2017
N	10/26/2017
N	9/28/2017
N	9/28/2017
N	9/28/2017
N	9/28/2017
N	8/28/2017
N	8/28/2017
N	8/28/2017
N	8/28/2017
N	7/27/2017
N	7/27/2017
N	7/27/2017
N	7/27/2017
N	6/23/2017
N	6/23/2017
N	6/23/2017
N	6/23/2017
N	5/24/2017
N	5/24/2017
N	5/24/2017
N	5/24/2017
N	4/27/2017
N	4/27/2017
N	4/27/2017
N	4/27/2017
N	4/27/2017
N	4/27/2017
N	4/27/2017
N	3/27/2017
N	3/27/2017
N	3/27/2017
N	3/27/2017
N	2/28/2017
N	2/28/2017
N	2/28/2017
N	2/28/2017
N	1/27/2017
N	1/27/2017
N	1/27/2017
N	1/27/2017
N	12/28/2016
N	12/28/2016
N	12/28/2016
N	12/28/2016
N	11/27/2016
N	11/27/2016
N	11/27/2016
N	11/27/2016
N	10/28/2016
N	10/28/2016
N	10/28/2016
N	10/28/2016
N	9/28/2016
N	9/28/2016
N	9/28/2016
N	9/28/2016
N	8/26/2016
N	8/26/2016
N	8/26/2016
N	8/26/2016
N	7/28/2016
N	7/28/2016
N	7/28/2016
N	7/28/2016
Y	9/1/2016
Y	9/1/2016
Y	9/1/2016
Y	9/1/2016
N	5/27/2016
N	5/27/2016
N	5/27/2016
N	5/27/2016
N	4/28/2016
N	4/28/2016
N	4/28/2016
N	4/28/2016
N	3/28/2016
N	3/28/2016
N	3/28/2016
N	3/28/2016
N	2/25/2016
N	2/25/2016
N	2/25/2016

N	2/25/2016
N	1/27/2016
N	1/27/2016
N	1/27/2016
N	1/27/2016
N	12/28/2015
N	12/28/2015
N	12/28/2015
N	12/28/2015
N	11/29/2015
N	11/29/2015
N	11/29/2015
N	11/29/2015
N	10/28/2015
N	10/28/2015
N	10/28/2015
N	10/28/2015
N	9/28/2015
N	9/28/2015
N	9/28/2015
N	9/28/2015
Y	8/26/2015
Y	8/26/2015
N	7/23/2015
N	7/23/2015
N	7/23/2015
N	7/23/2015
N	6/30/2015
N	6/30/2015
N	6/30/2015
N	6/30/2015
N	5/28/2015
N	5/28/2015
N	5/28/2015
N	5/28/2015
N	4/28/2015
N	4/28/2015
N	4/28/2015
N	4/28/2015
N	3/27/2015
N	3/27/2015
N	3/27/2015
N	3/27/2015
N	2/27/2015
N	2/27/2015
N	2/27/2015
N	2/27/2015
N	1/28/2015
N	1/28/2015
N	1/28/2015
N	1/28/2015
Y	7/2/2015
Y	7/2/2015
Y	7/2/2015
Y	7/2/2015
N	10/28/2019
N	10/28/2019
N	10/28/2019
N	10/28/2019
Y	
Y	
Y	
Y	
Y	
Y	
Y	
Y	
Y	12/31/2018
Y	12/31/2018
Y	12/31/2018
Y	12/31/2018
Y	12/31/2018
Y	12/31/2018
Y	12/31/2018
N	9/28/2018
N	9/28/2018
N	9/28/2018
N	9/28/2018
N	8/27/2018
N	8/27/2018
N	8/27/2018
N	8/27/2018
N	7/27/2018
N	7/27/2018
N	7/27/2018
N	7/27/2018
N	6/28/2018
N	6/28/2018
N	6/28/2018
N	6/28/2018
N	11/27/2017
N	11/27/2017
N	11/27/2017
N	11/27/2017
N	10/26/2017
N	10/26/2017
N	10/26/2017
N	10/26/2017
N	9/28/2017
N	9/28/2017
N	9/28/2017
N	9/28/2017
N	8/28/2017
N	8/28/2017
N	8/28/2017
N	8/28/2017
N	7/27/2017
N	7/27/2017
N	7/27/2017
N	7/27/2017
N	6/23/2017

N	6/23/2017
N	6/23/2017
N	6/23/2017
N	11/27/2016
N	11/27/2016
N	11/27/2016
N	11/27/2016
N	10/28/2016
N	10/28/2016
N	10/28/2016
N	10/28/2016
N	9/28/2016
N	9/28/2016
N	9/28/2016
N	9/28/2016
N	8/26/2016
N	8/26/2016
N	8/26/2016
N	8/26/2016
N	7/28/2016
N	7/28/2016
N	7/28/2016
N	7/28/2016
Y	9/1/2016
Y	9/1/2016
Y	9/1/2016
Y	9/1/2016
N	11/29/2015
N	11/29/2015
N	11/29/2015
N	11/29/2015
N	10/28/2015
N	10/28/2015
N	10/28/2015
N	10/28/2015
N	9/28/2015
N	9/28/2015
N	9/28/2015
N	9/28/2015
Y	8/26/2015
Y	8/26/2015
N	7/23/2015
N	7/23/2015
N	7/23/2015
N	7/23/2015
N	6/30/2015
N	6/30/2015
N	6/30/2015
N	6/30/2015
Y	7/2/2015
Y	7/2/2015
Y	
Y	
N	4/25/2019
N	4/25/2019
N	4/25/2019
N	4/25/2019
N	4/25/2019
N	3/26/2019
N	3/26/2019
N	3/26/2019
N	3/26/2019
N	2/26/2019
N	2/26/2019
N	2/26/2019
Y	
Y	
Y	1/28/2019
Y	1/28/2019
Y	1/28/2019
Y	1/28/2019
Y	9/6/2018
Y	9/6/2018
Y	9/6/2018
Y	9/6/2018
N	4/27/2018
N	4/27/2018
N	4/27/2018
N	4/27/2018
N	3/28/2018
N	3/28/2018
N	3/28/2018
N	3/28/2018
N	2/28/2018
N	2/28/2018
N	2/28/2018
N	2/28/2018
N	1/26/2018
N	1/26/2018
N	1/26/2018
N	1/26/2018
N	12/28/2017
N	12/28/2017
N	12/28/2017
N	12/28/2017
N	5/24/2017
N	5/24/2017
N	5/24/2017
N	5/24/2017
N	4/27/2017
N	4/27/2017
N	4/27/2017
N	4/27/2017
N	3/27/2017
N	3/27/2017
N	3/27/2017
N	3/27/2017
N	2/28/2017
N	2/28/2017
N	2/28/2017
N	2/28/2017
N	1/27/2017
N	1/27/2017

N	1/27/2017
N	1/27/2017
N	12/28/2016
N	12/28/2016
N	12/28/2016
N	12/28/2016
N	5/27/2016
N	5/27/2016
N	5/27/2016
N	5/27/2016
N	4/28/2016
N	4/28/2016
N	4/28/2016
N	4/28/2016
N	3/28/2016
N	3/28/2016
N	3/28/2016
N	3/28/2016
N	2/25/2016
N	2/25/2016
N	2/25/2016
N	2/25/2016
N	1/27/2016
N	1/27/2016
N	1/27/2016
N	1/27/2016
N	12/28/2015
N	12/28/2015
N	12/28/2015
N	12/28/2015
N	5/28/2015
N	5/28/2015
N	5/28/2015
N	5/28/2015
N	4/28/2015
N	4/28/2015
N	4/28/2015
N	4/28/2015
N	3/27/2015
N	3/27/2015
N	3/27/2015
N	3/27/2015
N	2/27/2015
N	2/27/2015
N	2/27/2015
N	2/27/2015
N	1/28/2015
N	1/28/2015
N	1/28/2015
N	1/28/2015
Y	7/2/2015
Y	7/2/2015
N	10/28/2019
N	10/28/2019
Y	
Y	
Y	
Y	
Y	
Y	
Y	
N	4/25/2019
N	4/25/2019
N	3/26/2019
N	3/26/2019
N	2/26/2019
N	2/26/2019
Y	
Y	1/28/2019
Y	1/28/2019
Y	12/31/2018
Y	12/31/2018
Y	12/31/2018
Y	12/31/2018
N	9/28/2018
N	9/28/2018
N	8/27/2018
N	8/27/2018
N	7/27/2018
N	7/27/2018
N	6/28/2018
N	6/28/2018
Y	9/6/2018
Y	9/6/2018
N	4/27/2018
N	4/27/2018
N	3/28/2018
N	3/28/2018
N	2/28/2018
N	2/28/2018
N	1/26/2018
N	1/26/2018
N	12/28/2017
N	12/28/2017
N	11/27/2017
N	11/27/2017
N	10/26/2017
N	10/26/2017
N	9/28/2017
N	9/28/2017
N	8/28/2017
N	8/28/2017
N	7/27/2017
N	7/27/2017
N	6/23/2017
N	6/23/2017
N	5/24/2017
N	5/24/2017
N	4/27/2017
N	4/27/2017
N	3/27/2017
N	3/27/2017
N	2/28/2017
N	2/28/2017
N	1/27/2017

N	1/27/2017
N	12/28/2016
N	12/28/2016
N	11/27/2016
N	11/27/2016
N	10/28/2016
N	10/28/2016
N	9/28/2016
N	9/28/2016
N	8/26/2016
N	8/26/2016
N	7/28/2016
N	7/28/2016
Y	9/1/2016
Y	9/1/2016
N	5/27/2016
N	5/27/2016
N	4/28/2016
N	4/28/2016
N	3/28/2016
N	3/28/2016
N	2/25/2016
N	2/25/2016
N	1/27/2016
N	1/27/2016
N	12/28/2015
N	12/28/2015
N	11/29/2015
N	11/29/2015
N	10/28/2015
N	10/28/2015
N	9/28/2015
N	9/28/2015
Y	8/26/2015
N	7/23/2015
N	7/23/2015
N	6/30/2015
N	6/30/2015
N	5/28/2015
N	5/28/2015
N	4/28/2015
N	4/28/2015
N	3/27/2015
N	3/27/2015
N	2/27/2015
N	2/27/2015
N	1/28/2015
N	1/28/2015
Y	7/2/2015
Y	7/2/2015
N	10/28/2019
N	10/28/2019
Y	
Y	
Y	
Y	
Y	
N	4/25/2019
N	4/25/2019
N	3/26/2019
N	3/26/2019
N	2/26/2019
N	2/26/2019
Y	
Y	1/28/2019
Y	1/28/2019
Y	12/31/2018
Y	12/31/2018
Y	12/31/2018
Y	12/31/2018
N	9/28/2018
N	9/28/2018
N	8/27/2018
N	8/27/2018
N	7/27/2018
N	7/27/2018
N	6/28/2018
N	6/28/2018
Y	9/6/2018
Y	9/6/2018
N	4/27/2018
N	4/27/2018
N	3/28/2018
N	2/28/2018
N	2/28/2018
N	1/26/2018
N	1/26/2018
N	12/28/2017
N	12/28/2017
N	11/27/2017
N	11/27/2017
N	10/26/2017
N	10/26/2017
N	9/28/2017
N	9/28/2017
N	8/28/2017
N	8/28/2017
N	7/27/2017
N	7/27/2017
N	6/23/2017
N	6/23/2017
N	5/24/2017
N	5/24/2017
N	4/27/2017
N	4/27/2017
N	3/27/2017
N	3/27/2017
N	2/28/2017
N	2/28/2017
N	1/27/2017
N	1/27/2017
N	12/28/2016

N	12/28/2016
N	11/27/2016
N	11/27/2016
N	10/28/2016
N	10/28/2016
N	9/28/2016
N	9/28/2016
N	8/26/2016
N	8/26/2016
N	7/28/2016
N	7/28/2016
Y	9/1/2016
Y	9/1/2016
N	5/27/2016
N	5/27/2016
N	4/28/2016
N	4/28/2016
N	3/28/2016
N	3/28/2016
N	2/25/2016
N	2/25/2016
N	1/27/2016
N	1/27/2016
N	12/28/2015
N	12/28/2015
N	11/29/2015
N	11/29/2015
N	10/28/2015
N	10/28/2015
N	9/28/2015
N	9/28/2015
Y	8/26/2015
N	7/23/2015
N	7/23/2015
N	6/30/2015
N	6/30/2015
N	5/28/2015
N	5/28/2015
N	4/28/2015
N	4/28/2015
N	3/27/2015
N	3/27/2015
N	2/27/2015
N	2/27/2015
N	1/28/2015
N	1/28/2015
Y	7/2/2015
Y	7/2/2015
N	10/28/2019
N	10/28/2019
Y	
Y	
Y	
Y	
Y	
N	4/25/2019
N	4/25/2019
N	3/26/2019
N	3/26/2019
N	3/26/2019
N	2/26/2019
N	2/26/2019
Y	
Y	1/28/2019
Y	1/28/2019
Y	12/31/2018
Y	12/31/2018
Y	12/31/2018
Y	12/31/2018
N	9/28/2018
N	9/28/2018
N	8/27/2018
N	8/27/2018
N	7/27/2018
N	7/27/2018
N	6/28/2018
N	6/28/2018
Y	9/6/2018
Y	9/6/2018
N	4/27/2018
N	4/27/2018
N	3/28/2018
N	3/28/2018
N	2/28/2018
N	2/28/2018
N	1/26/2018
N	1/26/2018
N	12/28/2017
N	12/28/2017
N	11/27/2017
N	11/27/2017
N	10/26/2017
N	10/26/2017
N	9/28/2017
N	9/28/2017
N	8/28/2017
N	8/28/2017
N	7/27/2017
N	7/27/2017
N	6/23/2017
N	6/23/2017
N	5/24/2017
N	5/24/2017
N	4/27/2017
N	4/27/2017
N	3/27/2017
N	3/27/2017
N	2/28/2017
N	2/28/2017
N	1/27/2017
N	1/27/2017
N	12/28/2016
N	12/28/2016
N	11/27/2016
N	11/27/2016

N	10/28/2016
N	10/28/2016
N	9/28/2016
N	9/28/2016
N	8/26/2016
N	8/26/2016
N	7/28/2016
N	7/28/2016
Y	9/1/2016
Y	9/1/2016
N	5/27/2016
N	5/27/2016
N	4/28/2016
N	4/28/2016
N	3/28/2016
N	3/28/2016
N	2/25/2016
N	2/25/2016
N	1/27/2016
N	1/27/2016
N	12/28/2015
N	12/28/2015
N	11/29/2015
N	11/29/2015
N	10/28/2015
N	10/28/2015
N	9/28/2015
N	9/28/2015
Y	8/26/2015
N	7/23/2015
N	7/23/2015
N	6/30/2015
N	6/30/2015
N	5/28/2015
N	5/28/2015
N	4/28/2015
N	4/28/2015
N	3/27/2015
N	3/27/2015
N	2/27/2015
N	2/27/2015
N	1/28/2015
N	1/28/2015
Y	7/2/2015
Y	7/2/2015
N	10/28/2019
N	10/28/2019
N	10/28/2019
N	10/28/2019
Y	
Y	
Y	
Y	
Y	
Y	
Y	
Y	
Y	
Y	
Y	
Y	
N	4/25/2019
N	4/25/2019
N	4/25/2019
N	4/25/2019
N	3/26/2019
N	3/26/2019
N	3/26/2019
N	3/26/2019
N	2/26/2019
N	2/26/2019
N	2/26/2019
N	2/26/2019
Y	
Y	
Y	1/28/2019
Y	1/28/2019
Y	1/28/2019
Y	1/28/2019
Y	12/31/2018
Y	12/31/2018
Y	12/31/2018
Y	12/31/2018
Y	12/31/2018
Y	12/31/2018
Y	12/31/2018
Y	12/31/2018
N	9/28/2018
N	9/28/2018
N	9/28/2018
N	9/28/2018
N	8/27/2018
N	8/27/2018
N	8/27/2018
N	8/27/2018
N	7/27/2018
N	7/27/2018
N	7/27/2018
N	7/27/2018
N	6/28/2018
N	6/28/2018
N	6/28/2018
N	6/28/2018
Y	9/6/2018
Y	9/6/2018
Y	9/6/2018
Y	9/6/2018
N	4/27/2018
N	4/27/2018
N	4/27/2018
N	4/27/2018
N	3/28/2018
N	3/28/2018
N	3/28/2018
N	3/28/2018
N	2/28/2018

N	2/28/2018
N	2/28/2018
N	2/28/2018
N	1/26/2018
N	1/26/2018
N	1/26/2018
N	1/26/2018
N	12/28/2017
N	12/28/2017
N	12/28/2017
N	12/28/2017
N	11/27/2017
N	11/27/2017
N	11/27/2017
N	11/27/2017
N	10/26/2017
N	10/26/2017
N	10/26/2017
N	10/26/2017
N	9/28/2017
N	9/28/2017
N	9/28/2017
N	9/28/2017
N	8/28/2017
N	8/28/2017
N	8/28/2017
N	8/28/2017
N	7/27/2017
N	7/27/2017
N	7/27/2017
N	7/27/2017
N	6/23/2017
N	6/23/2017
N	6/23/2017
N	6/23/2017
N	5/24/2017
N	5/24/2017
N	5/24/2017
N	5/24/2017
N	4/27/2017
N	4/27/2017
N	4/27/2017
N	4/27/2017
N	3/27/2017
N	3/27/2017
N	3/27/2017
N	3/27/2017
N	2/28/2017
N	2/28/2017
N	2/28/2017
N	2/28/2017
N	1/27/2017
N	1/27/2017
N	1/27/2017
N	1/27/2017
N	12/28/2016
N	12/28/2016
N	12/28/2016
N	12/28/2016
N	12/28/2016
N	12/28/2016
N	11/27/2016
N	11/27/2016
N	11/27/2016
N	11/27/2016
N	10/28/2016
N	10/28/2016
N	10/28/2016
N	10/28/2016
N	9/28/2016
N	9/28/2016
N	9/28/2016
N	9/28/2016
N	8/26/2016
N	8/26/2016
N	8/26/2016
N	8/26/2016
N	7/28/2016
N	7/28/2016
N	7/28/2016
N	7/28/2016
Y	9/1/2016
Y	9/1/2016
Y	9/1/2016
Y	9/1/2016
N	5/27/2016
N	5/27/2016
N	5/27/2016
N	5/27/2016
N	4/28/2016
N	4/28/2016
N	4/28/2016
N	4/28/2016
N	3/28/2016
N	3/28/2016
N	3/28/2016
N	3/28/2016
N	2/25/2016
N	2/25/2016
N	2/25/2016
N	2/25/2016
N	1/27/2016
N	1/27/2016
N	1/27/2016
N	1/27/2016
N	12/28/2015
N	12/28/2015
N	12/28/2015
N	12/28/2015
N	11/29/2015
N	11/29/2015
N	11/29/2015
N	11/29/2015
N	10/28/2015
N	10/28/2015
N	10/28/2015

N	10/28/2015
N	9/28/2015
N	9/28/2015
N	9/28/2015
N	9/28/2015
Y	8/26/2015
Y	8/26/2015
N	7/23/2015
N	7/23/2015
N	7/23/2015
N	7/23/2015
N	6/30/2015
N	6/30/2015
N	6/30/2015
N	6/30/2015
N	5/28/2015
N	5/28/2015
N	5/28/2015
N	5/28/2015
N	4/28/2015
N	4/28/2015
N	4/28/2015
N	4/28/2015
N	3/27/2015
N	3/27/2015
N	3/27/2015
N	3/27/2015
N	2/27/2015
N	2/27/2015
N	2/27/2015
N	2/27/2015
N	1/28/2015
N	1/28/2015
N	1/28/2015
N	1/28/2015
Y	7/2/2015
Y	7/2/2015
Y	7/2/2015
Y	7/2/2015

NPDES ID	Permit Name	Latitude in DMS	Longitude in DMS	Latitude in Decima	Longitude in Decim
KY0045390	Airview WWTF	+ 37 45' 30" 0	- 85 53' 32" 0	37.758333	-85.892222
KY0045390	Airview WWTF	+ 37 45' 30" 0	- 85 53' 32" 0	37.758333	-85.892222
KY0045390	Airview WWTF	+ 37 45' 30" 0	- 85 53' 32" 0	37.758333	-85.892222
KY0045390	Airview WWTF	+ 37 45' 30" 0	- 85 53' 32" 0	37.758333	-85.892222
KY0045390	Airview WWTF	+ 37 45' 30" 0	- 85 53' 32" 0	37.758333	-85.892222
KY0045390	Airview WWTF	+ 37 45' 30" 0	- 85 53' 32" 0	37.758333	-85.892222
KY0045390	Airview WWTF	+ 37 45' 30" 0	- 85 53' 32" 0	37.758333	-85.892222
KY0045390	Airview WWTF	+ 37 45' 30" 0	- 85 53' 32" 0	37.758333	-85.892222
KY0045390	Airview WWTF	+ 37 45' 30" 0	- 85 53' 32" 0	37.758333	-85.892222
KY0045390	Airview WWTF	+ 37 45' 30" 0	- 85 53' 32" 0	37.758333	-85.892222
KY0045390	Airview WWTF	+ 37 45' 30" 0	- 85 53' 32" 0	37.758333	-85.892222
KY0045390	Airview WWTF	+ 37 45' 30" 0	- 85 53' 32" 0	37.758333	-85.892222
KY0045390	Airview WWTF	+ 37 45' 30" 0	- 85 53' 32" 0	37.758333	-85.892222
KY0045390	Airview WWTF	+ 37 45' 30" 0	- 85 53' 32" 0	37.758333	-85.892222
KY0045390	Airview WWTF	+ 37 45' 30" 0	- 85 53' 32" 0	37.758333	-85.892222
KY0045390	Airview WWTF	+ 37 45' 30" 0	- 85 53' 32" 0	37.758333	-85.892222
KY0045390	Airview WWTF	+ 37 45' 30" 0	- 85 53' 32" 0	37.758333	-85.892222
KY0045390	Airview WWTF	+ 37 45' 30" 0	- 85 53' 32" 0	37.758333	-85.892222
KY0045390	Airview WWTF	+ 37 45' 30" 0	- 85 53' 32" 0	37.758333	-85.892222
KY0045390	Airview WWTF	+ 37 45' 30" 0	- 85 53' 32" 0	37.758333	-85.892222
KY0045390	Airview WWTF	+ 37 45' 30" 0	- 85 53' 32" 0	37.758333	-85.892222
KY0045390	Airview WWTF	+ 37 45' 30" 0	- 85 53' 32" 0	37.758333	-85.892222
KY0045390	Airview WWTF	+ 37 45' 30" 0	- 85 53' 32" 0	37.758333	-85.892222
KY0045390	Airview WWTF	+ 37 45' 30" 0	- 85 53' 32" 0	37.758333	-85.892222
KY0045390	Airview WWTF	+ 37 45' 30" 0	- 85 53' 32" 0	37.758333	-85.892222
KY0045390	Airview WWTF	+ 37 45' 30" 0	- 85 53' 32" 0	37.758333	-85.892222
KY0045390	Airview WWTF	+ 37 45' 30" 0	- 85 53' 32" 0	37.758333	-85.892222
KY0045390	Airview WWTF	+ 37 45' 30" 0	- 85 53' 32" 0	37.758333	-85.892222
KY0045390	Airview WWTF	+ 37 45' 30" 0	- 85 53' 32" 0	37.758333	-85.892222
KY0045390	Airview WWTF	+ 37 45' 30" 0	- 85 53' 32" 0	37.758333	-85.892222
KY0045390	Airview WWTF	+ 37 45' 30" 0	- 85 53' 32" 0	37.758333	-85.892222
KY0045390	Airview WWTF	+ 37 45' 30" 0	- 85 53' 32" 0	37.758333	-85.892222
KY0045390	Airview WWTF	+ 37 45' 30" 0	- 85 53' 32" 0	37.758333	-85.892222
KY0045390	Airview WWTF	+ 37 45' 30" 0	- 85 53' 32" 0	37.758333	-85.892222
KY0045390	Airview WWTF	+ 37 45' 30" 0	- 85 53' 32" 0	37.758333	-85.892222
KY0045390	Airview WWTF	+ 37 45' 30" 0	- 85 53' 32" 0	37.758333	-85.892222
KY0045390	Airview WWTF	+ 37 45' 30" 0	- 85 53' 32" 0	37.758333	-85.892222
KY0045390	Airview WWTF	+ 37 45' 30" 0	- 85 53' 32" 0	37.758333	-85.892222
KY0045390	Airview WWTF	+ 37 45' 30" 0	- 85 53' 32" 0	37.758333	-85.892222
KY0045390	Airview WWTF	+ 37 45' 30" 0	- 85 53' 32" 0	37.758333	-85.892222
KY0045390	Airview WWTF	+ 37 45' 30" 0	- 85 53' 32" 0	37.758333	-85.892222
KY0045390	Airview WWTF	+ 37 45' 30" 0	- 85 53' 32" 0	37.758333	-85.892222
KY0045390	Airview WWTF	+ 37 45' 30" 0	- 85 53' 32" 0	37.758333	-85.892222
KY0045390	Airview WWTF	+ 37 45' 30" 0	- 85 53' 32" 0	37.758333	-85.892222
KY0045390	Airview WWTF	+ 37 45' 30" 0	- 85 53' 32" 0	37.758333	-85.892222
KY0045390	Airview WWTF	+ 37 45' 30" 0	- 85 53' 32" 0	37.758333	-85.892222
KY0045390	Airview WWTF	+ 37 45' 30" 0	- 85 53' 32" 0	37.758333	-85.892222
KY0045390	Airview WWTF	+ 37 45' 30" 0	- 85 53' 32" 0	37.758333	-85.892222
KY0045390	Airview WWTF	+ 37 45' 30" 0	- 85 53' 32" 0	37.758333	-85.892222
KY0045390	Airview WWTF	+ 37 45' 30" 0	- 85 53' 32" 0	37.758333	-85.892222

KY0045390	Airview WWTF	+ 37 45' 30" 0	- 85 53' 32" 0	37.758333	-85.892222
KY0045390	Airview WWTF	+ 37 45' 30" 0	- 85 53' 32" 0	37.758333	-85.892222
KY0045390	Airview WWTF	+ 37 45' 30" 0	- 85 53' 32" 0	37.758333	-85.892222
KY0045390	Airview WWTF	+ 37 45' 30" 0	- 85 53' 32" 0	37.758333	-85.892222
KY0045390	Airview WWTF	+ 37 45' 30" 0	- 85 53' 32" 0	37.758333	-85.892222
KY0045390	Airview WWTF	+ 37 45' 30" 0	- 85 53' 32" 0	37.758333	-85.892222
KY0045390	Airview WWTF	+ 37 45' 30" 0	- 85 53' 32" 0	37.758333	-85.892222
KY0045390	Airview WWTF	+ 37 45' 30" 0	- 85 53' 32" 0	37.758333	-85.892222
KY0045390	Airview WWTF	+ 37 45' 30" 0	- 85 53' 32" 0	37.758333	-85.892222
KY0045390	Airview WWTF	+ 37 45' 30" 0	- 85 53' 32" 0	37.758333	-85.892222
KY0045390	Airview WWTF	+ 37 45' 30" 0	- 85 53' 32" 0	37.758333	-85.892222
KY0045390	Airview WWTF	+ 37 45' 30" 0	- 85 53' 32" 0	37.758333	-85.892222
KY0045390	Airview WWTF	+ 37 45' 30" 0	- 85 53' 32" 0	37.758333	-85.892222
KY0045390	Airview WWTF	+ 37 45' 30" 0	- 85 53' 32" 0	37.758333	-85.892222
KY0045390	Airview WWTF	+ 37 45' 30" 0	- 85 53' 32" 0	37.758333	-85.892222
KY0045390	Airview WWTF	+ 37 45' 30" 0	- 85 53' 32" 0	37.758333	-85.892222
KY0045390	Airview WWTF	+ 37 45' 30" 0	- 85 53' 32" 0	37.758333	-85.892222
KY0045390	Airview WWTF	+ 37 45' 30" 0	- 85 53' 32" 0	37.758333	-85.892222
KY0045390	Airview WWTF	+ 37 45' 30" 0	- 85 53' 32" 0	37.758333	-85.892222
KY0045390	Airview WWTF	+ 37 45' 30" 0	- 85 53' 32" 0	37.758333	-85.892222
KY0045390	Airview WWTF	+ 37 45' 30" 0	- 85 53' 32" 0	37.758333	-85.892222
KY0045390	Airview WWTF	+ 37 45' 30" 0	- 85 53' 32" 0	37.758333	-85.892222
KY0045390	Airview WWTF	+ 37 45' 30" 0	- 85 53' 32" 0	37.758333	-85.892222
KY0045390	Airview WWTF	+ 37 45' 30" 0	- 85 53' 32" 0	37.758333	-85.892222
KY0045390	Airview WWTF	+ 37 45' 30" 0	- 85 53' 32" 0	37.758333	-85.892222
KY0045390	Airview WWTF	+ 37 45' 30" 0	- 85 53' 32" 0	37.758333	-85.892222
KY0045390	Airview WWTF	+ 37 45' 30" 0	- 85 53' 32" 0	37.758333	-85.892222
KY0045390	Airview WWTF	+ 37 45' 30" 0	- 85 53' 32" 0	37.758333	-85.892222
KY0045390	Airview WWTF	+ 37 45' 30" 0	- 85 53' 32" 0	37.758333	-85.892222
KY0045390	Airview WWTF	+ 37 45' 30" 0	- 85 53' 32" 0	37.758333	-85.892222
KY0045390	Airview WWTF	+ 37 45' 30" 0	- 85 53' 32" 0	37.758333	-85.892222
KY0045390	Airview WWTF	+ 37 45' 30" 0	- 85 53' 32" 0	37.758333	-85.892222
KY0045390	Airview WWTF	+ 37 45' 30" 0	- 85 53' 32" 0	37.758333	-85.892222
KY0045390	Airview WWTF	+ 37 45' 30" 0	- 85 53' 32" 0	37.758333	-85.892222
KY0045390	Airview WWTF	+ 37 45' 30" 0	- 85 53' 32" 0	37.758333	-85.892222
KY0045390	Airview WWTF	+ 37 45' 30" 0	- 85 53' 32" 0	37.758333	-85.892222
KY0045390	Airview WWTF	+ 37 45' 30" 0	- 85 53' 32" 0	37.758333	-85.892222
KY0045390	Airview WWTF	+ 37 45' 30" 0	- 85 53' 32" 0	37.758333	-85.892222
KY0045390	Airview WWTF	+ 37 45' 30" 0	- 85 53' 32" 0	37.758333	-85.892222
KY0045390	Airview WWTF	+ 37 45' 30" 0	- 85 53' 32" 0	37.758333	-85.892222
KY0045390	Airview WWTF	+ 37 45' 30" 0	- 85 53' 32" 0	37.758333	-85.892222
KY0045390	Airview WWTF	+ 37 45' 30" 0	- 85 53' 32" 0	37.758333	-85.892222
KY0045390	Airview WWTF	+ 37 45' 30" 0	- 85 53' 32" 0	37.758333	-85.892222
KY0045390	Airview WWTF	+ 37 45' 30" 0	- 85 53' 32" 0	37.758333	-85.892222
KY0045390	Airview WWTF	+ 37 45' 30" 0	- 85 53' 32" 0	37.758333	-85.892222
KY0045390	Airview WWTF	+ 37 45' 30" 0	- 85 53' 32" 0	37.758333	-85.892222
KY0045390	Airview WWTF	+ 37 45' 30" 0	- 85 53' 32" 0	37.758333	-85.892222
KY0045390	Airview WWTF	+ 37 45' 30" 0	- 85 53' 32" 0	37.758333	-85.892222
KY0045390	Airview WWTF	+ 37 45' 30" 0	- 85 53' 32" 0	37.758333	-85.892222
KY0045390	Airview WWTF	+ 37 45' 30" 0	- 85 53' 32" 0	37.758333	-85.892222
KY0045390	Airview WWTF	+ 37 45' 30" 0	- 85 53' 32" 0	37.758333	-85.892222

KY0045390	Airview WWTF	+ 37 45' 30" 0	- 85 53' 32" 0	37.758333	-85.892222
KY0045390	Airview WWTF	+ 37 45' 30" 0	- 85 53' 32" 0	37.758333	-85.892222
KY0045390	Airview WWTF	+ 37 45' 30" 0	- 85 53' 32" 0	37.758333	-85.892222
KY0045390	Airview WWTF	+ 37 45' 30" 0	- 85 53' 32" 0	37.758333	-85.892222
KY0045390	Airview WWTF	+ 37 45' 30" 0	- 85 53' 32" 0	37.758333	-85.892222
KY0045390	Airview WWTF	+ 37 45' 30" 0	- 85 53' 32" 0	37.758333	-85.892222
KY0045390	Airview WWTF	+ 37 45' 30" 0	- 85 53' 32" 0	37.758333	-85.892222
KY0045390	Airview WWTF	+ 37 45' 30" 0	- 85 53' 32" 0	37.758333	-85.892222
KY0045390	Airview WWTF	+ 37 45' 30" 0	- 85 53' 32" 0	37.758333	-85.892222
KY0045390	Airview WWTF	+ 37 45' 30" 0	- 85 53' 32" 0	37.758333	-85.892222
KY0045390	Airview WWTF	+ 37 45' 30" 0	- 85 53' 32" 0	37.758333	-85.892222
KY0045390	Airview WWTF	+ 37 45' 30" 0	- 85 53' 32" 0	37.758333	-85.892222
KY0045390	Airview WWTF	+ 37 45' 30" 0	- 85 53' 32" 0	37.758333	-85.892222
KY0045390	Airview WWTF	+ 37 45' 30" 0	- 85 53' 32" 0	37.758333	-85.892222
KY0045390	Airview WWTF	+ 37 45' 30" 0	- 85 53' 32" 0	37.758333	-85.892222
KY0045390	Airview WWTF	+ 37 45' 30" 0	- 85 53' 32" 0	37.758333	-85.892222
KY0045390	Airview WWTF	+ 37 45' 30" 0	- 85 53' 32" 0	37.758333	-85.892222
KY0045390	Airview WWTF	+ 37 45' 30" 0	- 85 53' 32" 0	37.758333	-85.892222
KY0045390	Airview WWTF	+ 37 45' 30" 0	- 85 53' 32" 0	37.758333	-85.892222
KY0045390	Airview WWTF	+ 37 45' 30" 0	- 85 53' 32" 0	37.758333	-85.892222
KY0045390	Airview WWTF	+ 37 45' 30" 0	- 85 53' 32" 0	37.758333	-85.892222
KY0045390	Airview WWTF	+ 37 45' 30" 0	- 85 53' 32" 0	37.758333	-85.892222
KY0045390	Airview WWTF	+ 37 45' 30" 0	- 85 53' 32" 0	37.758333	-85.892222
KY0045390	Airview WWTF	+ 37 45' 30" 0	- 85 53' 32" 0	37.758333	-85.892222
KY0045390	Airview WWTF	+ 37 45' 30" 0	- 85 53' 32" 0	37.758333	-85.892222
KY0045390	Airview WWTF	+ 37 45' 30" 0	- 85 53' 32" 0	37.758333	-85.892222
KY0045390	Airview WWTF	+ 37 45' 30" 0	- 85 53' 32" 0	37.758333	-85.892222
KY0045390	Airview WWTF	+ 37 45' 30" 0	- 85 53' 32" 0	37.758333	-85.892222
KY0045390	Airview WWTF	+ 37 45' 30" 0	- 85 53' 32" 0	37.758333	-85.892222
KY0045390	Airview WWTF	+ 37 45' 30" 0	- 85 53' 32" 0	37.758333	-85.892222
KY0045390	Airview WWTF	+ 37 45' 30" 0	- 85 53' 32" 0	37.758333	-85.892222
KY0045390	Airview WWTF	+ 37 45' 30" 0	- 85 53' 32" 0	37.758333	-85.892222
KY0045390	Airview WWTF	+ 37 45' 30" 0	- 85 53' 32" 0	37.758333	-85.892222
KY0045390	Airview WWTF	+ 37 45' 30" 0	- 85 53' 32" 0	37.758333	-85.892222
KY0045390	Airview WWTF	+ 37 45' 30" 0	- 85 53' 32" 0	37.758333	-85.892222
KY0045390	Airview WWTF	+ 37 45' 30" 0	- 85 53' 32" 0	37.758333	-85.892222
KY0045390	Airview WWTF	+ 37 45' 30" 0	- 85 53' 32" 0	37.758333	-85.892222
KY0045390	Airview WWTF	+ 37 45' 30" 0	- 85 53' 32" 0	37.758333	-85.892222
KY0045390	Airview WWTF	+ 37 45' 30" 0	- 85 53' 32" 0	37.758333	-85.892222
KY0045390	Airview WWTF	+ 37 45' 30" 0	- 85 53' 32" 0	37.758333	-85.892222
KY0045390	Airview WWTF	+ 37 45' 30" 0	- 85 53' 32" 0	37.758333	-85.892222
KY0045390	Airview WWTF	+ 37 45' 30" 0	- 85 53' 32" 0	37.758333	-85.892222
KY0045390	Airview WWTF	+ 37 45' 30" 0	- 85 53' 32" 0	37.758333	-85.892222
KY0045390	Airview WWTF	+ 37 45' 30" 0	- 85 53' 32" 0	37.758333	-85.892222
KY0045390	Airview WWTF	+ 37 45' 30" 0	- 85 53' 32" 0	37.758333	-85.892222
KY0045390	Airview WWTF	+ 37 45' 30" 0	- 85 53' 32" 0	37.758333	-85.892222
KY0045390	Airview WWTF	+ 37 45' 30" 0	- 85 53' 32" 0	37.758333	-85.892222
KY0045390	Airview WWTF	+ 37 45' 30" 0	- 85 53' 32" 0	37.758333	-85.892222
KY0045390	Airview WWTF	+ 37 45' 30" 0	- 85 53' 32" 0	37.758333	-85.892222
KY0045390	Airview WWTF	+ 37 45' 30" 0	- 85 53' 32" 0	37.758333	-85.892222
KY0045390	Airview WWTF	+ 37 45' 30" 0	- 85 53' 32" 0	37.758333	-85.892222

KY0045390	Airview WWTF	+ 37 45' 30" 0	- 85 53' 32" 0	37.758333	-85.892222
KY0045390	Airview WWTF	+ 37 45' 30" 0	- 85 53' 32" 0	37.758333	-85.892222
KY0045390	Airview WWTF	+ 37 45' 30" 0	- 85 53' 32" 0	37.758333	-85.892222
KY0045390	Airview WWTF	+ 37 45' 30" 0	- 85 53' 32" 0	37.758333	-85.892222
KY0045390	Airview WWTF	+ 37 45' 30" 0	- 85 53' 32" 0	37.758333	-85.892222
KY0045390	Airview WWTF	+ 37 45' 30" 0	- 85 53' 32" 0	37.758333	-85.892222
KY0045390	Airview WWTF	+ 37 45' 30" 0	- 85 53' 32" 0	37.758333	-85.892222
KY0045390	Airview WWTF	+ 37 45' 30" 0	- 85 53' 32" 0	37.758333	-85.892222
KY0045390	Airview WWTF	+ 37 45' 30" 0	- 85 53' 32" 0	37.758333	-85.892222
KY0045390	Airview WWTF	+ 37 45' 30" 0	- 85 53' 32" 0	37.758333	-85.892222
KY0045390	Airview WWTF	+ 37 45' 30" 0	- 85 53' 32" 0	37.758333	-85.892222
KY0045390	Airview WWTF	+ 37 45' 30" 0	- 85 53' 32" 0	37.758333	-85.892222
KY0045390	Airview WWTF	+ 37 45' 30" 0	- 85 53' 32" 0	37.758333	-85.892222
KY0045390	Airview WWTF	+ 37 45' 30" 0	- 85 53' 32" 0	37.758333	-85.892222
KY0045390	Airview WWTF	+ 37 45' 30" 0	- 85 53' 32" 0	37.758333	-85.892222
KY0045390	Airview WWTF	+ 37 45' 30" 0	- 85 53' 32" 0	37.758333	-85.892222
KY0045390	Airview WWTF	+ 37 45' 30" 0	- 85 53' 32" 0	37.758333	-85.892222
KY0045390	Airview WWTF	+ 37 45' 30" 0	- 85 53' 32" 0	37.758333	-85.892222
KY0045390	Airview WWTF	+ 37 45' 30" 0	- 85 53' 32" 0	37.758333	-85.892222
KY0045390	Airview WWTF	+ 37 45' 30" 0	- 85 53' 32" 0	37.758333	-85.892222
KY0045390	Airview WWTF	+ 37 45' 30" 0	- 85 53' 32" 0	37.758333	-85.892222
KY0045390	Airview WWTF	+ 37 45' 30" 0	- 85 53' 32" 0	37.758333	-85.892222
KY0045390	Airview WWTF	+ 37 45' 30" 0	- 85 53' 32" 0	37.758333	-85.892222
KY0045390	Airview WWTF	+ 37 45' 30" 0	- 85 53' 32" 0	37.758333	-85.892222
KY0045390	Airview WWTF	+ 37 45' 30" 0	- 85 53' 32" 0	37.758333	-85.892222
KY0045390	Airview WWTF	+ 37 45' 30" 0	- 85 53' 32" 0	37.758333	-85.892222
KY0045390	Airview WWTF	+ 37 45' 30" 0	- 85 53' 32" 0	37.758333	-85.892222
KY0045390	Airview WWTF	+ 37 45' 30" 0	- 85 53' 32" 0	37.758333	-85.892222
KY0045390	Airview WWTF	+ 37 45' 30" 0	- 85 53' 32" 0	37.758333	-85.892222
KY0045390	Airview WWTF	+ 37 45' 30" 0	- 85 53' 32" 0	37.758333	-85.892222
KY0045390	Airview WWTF	+ 37 45' 30" 0	- 85 53' 32" 0	37.758333	-85.892222
KY0045390	Airview WWTF	+ 37 45' 30" 0	- 85 53' 32" 0	37.758333	-85.892222
KY0045390	Airview WWTF	+ 37 45' 30" 0	- 85 53' 32" 0	37.758333	-85.892222
KY0045390	Airview WWTF	+ 37 45' 30" 0	- 85 53' 32" 0	37.758333	-85.892222
KY0045390	Airview WWTF	+ 37 45' 30" 0	- 85 53' 32" 0	37.758333	-85.892222
KY0045390	Airview WWTF	+ 37 45' 30" 0	- 85 53' 32" 0	37.758333	-85.892222
KY0045390	Airview WWTF	+ 37 45' 30" 0	- 85 53' 32" 0	37.758333	-85.892222
KY0045390	Airview WWTF	+ 37 45' 30" 0	- 85 53' 32" 0	37.758333	-85.892222
KY0045390	Airview WWTF	+ 37 45' 30" 0	- 85 53' 32" 0	37.758333	-85.892222
KY0045390	Airview WWTF	+ 37 45' 30" 0	- 85 53' 32" 0	37.758333	-85.892222
KY0045390	Airview WWTF	+ 37 45' 30" 0	- 85 53' 32" 0	37.758333	-85.892222
KY0045390	Airview WWTF	+ 37 45' 30" 0	- 85 53' 32" 0	37.758333	-85.892222
KY0045390	Airview WWTF	+ 37 45' 30" 0	- 85 53' 32" 0	37.758333	-85.892222
KY0045390	Airview WWTF	+ 37 45' 30" 0	- 85 53' 32" 0	37.758333	-85.892222
KY0045390	Airview WWTF	+ 37 45' 30" 0	- 85 53' 32" 0	37.758333	-85.892222
KY0045390	Airview WWTF	+ 37 45' 30" 0	- 85 53' 32" 0	37.758333	-85.892222
KY0045390	Airview WWTF	+ 37 45' 30" 0	- 85 53' 32" 0	37.758333	-85.892222
KY0045390	Airview WWTF	+ 37 45' 30" 0	- 85 53' 32" 0	37.758333	-85.892222
KY0045390	Airview WWTF	+ 37 45' 30" 0	- 85 53' 32" 0	37.758333	-85.892222
KY0045390	Airview WWTF	+ 37 45' 30" 0	- 85 53' 32" 0	37.758333	-85.892222
KY0045390	Airview WWTF	+ 37 45' 30" 0	- 85 53' 32" 0	37.758333	-85.892222

KY0045390	Airview WWTF	+ 37 45' 30" 0	- 85 53' 32" 0	37.758333	-85.892222
KY0045390	Airview WWTF	+ 37 45' 30" 0	- 85 53' 32" 0	37.758333	-85.892222
KY0045390	Airview WWTF	+ 37 45' 30" 0	- 85 53' 32" 0	37.758333	-85.892222
KY0045390	Airview WWTF	+ 37 45' 30" 0	- 85 53' 32" 0	37.758333	-85.892222
KY0045390	Airview WWTF	+ 37 45' 30" 0	- 85 53' 32" 0	37.758333	-85.892222
KY0045390	Airview WWTF	+ 37 45' 30" 0	- 85 53' 32" 0	37.758333	-85.892222
KY0045390	Airview WWTF	+ 37 45' 30" 0	- 85 53' 32" 0	37.758333	-85.892222
KY0045390	Airview WWTF	+ 37 45' 30" 0	- 85 53' 32" 0	37.758333	-85.892222
KY0045390	Airview WWTF	+ 37 45' 30" 0	- 85 53' 32" 0	37.758333	-85.892222
KY0045390	Airview WWTF	+ 37 45' 30" 0	- 85 53' 32" 0	37.758333	-85.892222
KY0045390	Airview WWTF	+ 37 45' 30" 0	- 85 53' 32" 0	37.758333	-85.892222
KY0045390	Airview WWTF	+ 37 45' 30" 0	- 85 53' 32" 0	37.758333	-85.892222
KY0045390	Airview WWTF	+ 37 45' 30" 0	- 85 53' 32" 0	37.758333	-85.892222
KY0045390	Airview WWTF	+ 37 45' 30" 0	- 85 53' 32" 0	37.758333	-85.892222
KY0045390	Airview WWTF	+ 37 45' 30" 0	- 85 53' 32" 0	37.758333	-85.892222
KY0045390	Airview WWTF	+ 37 45' 30" 0	- 85 53' 32" 0	37.758333	-85.892222
KY0045390	Airview WWTF	+ 37 45' 30" 0	- 85 53' 32" 0	37.758333	-85.892222
KY0045390	Airview WWTF	+ 37 45' 30" 0	- 85 53' 32" 0	37.758333	-85.892222
KY0045390	Airview WWTF	+ 37 45' 30" 0	- 85 53' 32" 0	37.758333	-85.892222
KY0045390	Airview WWTF	+ 37 45' 30" 0	- 85 53' 32" 0	37.758333	-85.892222
KY0045390	Airview WWTF	+ 37 45' 30" 0	- 85 53' 32" 0	37.758333	-85.892222
KY0045390	Airview WWTF	+ 37 45' 30" 0	- 85 53' 32" 0	37.758333	-85.892222
KY0045390	Airview WWTF	+ 37 45' 30" 0	- 85 53' 32" 0	37.758333	-85.892222
KY0045390	Airview WWTF	+ 37 45' 30" 0	- 85 53' 32" 0	37.758333	-85.892222
KY0045390	Airview WWTF	+ 37 45' 30" 0	- 85 53' 32" 0	37.758333	-85.892222
KY0045390	Airview WWTF	+ 37 45' 30" 0	- 85 53' 32" 0	37.758333	-85.892222
KY0045390	Airview WWTF	+ 37 45' 30" 0	- 85 53' 32" 0	37.758333	-85.892222
KY0045390	Airview WWTF	+ 37 45' 30" 0	- 85 53' 32" 0	37.758333	-85.892222
KY0045390	Airview WWTF	+ 37 45' 30" 0	- 85 53' 32" 0	37.758333	-85.892222
KY0045390	Airview WWTF	+ 37 45' 30" 0	- 85 53' 32" 0	37.758333	-85.892222
KY0045390	Airview WWTF	+ 37 45' 30" 0	- 85 53' 32" 0	37.758333	-85.892222
KY0045390	Airview WWTF	+ 37 45' 30" 0	- 85 53' 32" 0	37.758333	-85.892222
KY0045390	Airview WWTF	+ 37 45' 30" 0	- 85 53' 32" 0	37.758333	-85.892222
KY0045390	Airview WWTF	+ 37 45' 30" 0	- 85 53' 32" 0	37.758333	-85.892222
KY0045390	Airview WWTF	+ 37 45' 30" 0	- 85 53' 32" 0	37.758333	-85.892222
KY0045390	Airview WWTF	+ 37 45' 30" 0	- 85 53' 32" 0	37.758333	-85.892222
KY0045390	Airview WWTF	+ 37 45' 30" 0	- 85 53' 32" 0	37.758333	-85.892222
KY0045390	Airview WWTF	+ 37 45' 30" 0	- 85 53' 32" 0	37.758333	-85.892222
KY0045390	Airview WWTF	+ 37 45' 30" 0	- 85 53' 32" 0	37.758333	-85.892222
KY0045390	Airview WWTF	+ 37 45' 30" 0	- 85 53' 32" 0	37.758333	-85.892222
KY0045390	Airview WWTF	+ 37 45' 30" 0	- 85 53' 32" 0	37.758333	-85.892222
KY0045390	Airview WWTF	+ 37 45' 30" 0	- 85 53' 32" 0	37.758333	-85.892222
KY0045390	Airview WWTF	+ 37 45' 30" 0	- 85 53' 32" 0	37.758333	-85.892222
KY0045390	Airview WWTF	+ 37 45' 30" 0	- 85 53' 32" 0	37.758333	-85.892222
KY0045390	Airview WWTF	+ 37 45' 30" 0	- 85 53' 32" 0	37.758333	-85.892222
KY0045390	Airview WWTF	+ 37 45' 30" 0	- 85 53' 32" 0	37.758333	-85.892222
KY0045390	Airview WWTF	+ 37 45' 30" 0	- 85 53' 32" 0	37.758333	-85.892222
KY0045390	Airview WWTF	+ 37 45' 30" 0	- 85 53' 32" 0	37.758333	-85.892222
KY0045390	Airview WWTF	+ 37 45' 30" 0	- 85 53' 32" 0	37.758333	-85.892222
KY0045390	Airview WWTF	+ 37 45' 30" 0	- 85 53' 32" 0	37.758333	-85.892222
KY0045390	Airview WWTF	+ 37 45' 30" 0	- 85 53' 32" 0	37.758333	-85.892222

KY0045390	Airview WWTF	+ 37 45' 30" 0	- 85 53' 32" 0	37.758333	-85.892222
KY0045390	Airview WWTF	+ 37 45' 30" 0	- 85 53' 32" 0	37.758333	-85.892222
KY0045390	Airview WWTF	+ 37 45' 30" 0	- 85 53' 32" 0	37.758333	-85.892222
KY0045390	Airview WWTF	+ 37 45' 30" 0	- 85 53' 32" 0	37.758333	-85.892222
KY0045390	Airview WWTF	+ 37 45' 30" 0	- 85 53' 32" 0	37.758333	-85.892222
KY0045390	Airview WWTF	+ 37 45' 30" 0	- 85 53' 32" 0	37.758333	-85.892222
KY0045390	Airview WWTF	+ 37 45' 30" 0	- 85 53' 32" 0	37.758333	-85.892222
KY0045390	Airview WWTF	+ 37 45' 30" 0	- 85 53' 32" 0	37.758333	-85.892222
KY0045390	Airview WWTF	+ 37 45' 30" 0	- 85 53' 32" 0	37.758333	-85.892222
KY0045390	Airview WWTF	+ 37 45' 30" 0	- 85 53' 32" 0	37.758333	-85.892222
KY0045390	Airview WWTF	+ 37 45' 30" 0	- 85 53' 32" 0	37.758333	-85.892222
KY0045390	Airview WWTF	+ 37 45' 30" 0	- 85 53' 32" 0	37.758333	-85.892222
KY0045390	Airview WWTF	+ 37 45' 30" 0	- 85 53' 32" 0	37.758333	-85.892222
KY0045390	Airview WWTF	+ 37 45' 30" 0	- 85 53' 32" 0	37.758333	-85.892222
KY0045390	Airview WWTF	+ 37 45' 30" 0	- 85 53' 32" 0	37.758333	-85.892222
KY0045390	Airview WWTF	+ 37 45' 30" 0	- 85 53' 32" 0	37.758333	-85.892222
KY0045390	Airview WWTF	+ 37 45' 30" 0	- 85 53' 32" 0	37.758333	-85.892222
KY0045390	Airview WWTF	+ 37 45' 30" 0	- 85 53' 32" 0	37.758333	-85.892222
KY0045390	Airview WWTF	+ 37 45' 30" 0	- 85 53' 32" 0	37.758333	-85.892222
KY0045390	Airview WWTF	+ 37 45' 30" 0	- 85 53' 32" 0	37.758333	-85.892222
KY0045390	Airview WWTF	+ 37 45' 30" 0	- 85 53' 32" 0	37.758333	-85.892222
KY0045390	Airview WWTF	+ 37 45' 30" 0	- 85 53' 32" 0	37.758333	-85.892222
KY0045390	Airview WWTF	+ 37 45' 30" 0	- 85 53' 32" 0	37.758333	-85.892222
KY0045390	Airview WWTF	+ 37 45' 30" 0	- 85 53' 32" 0	37.758333	-85.892222
KY0045390	Airview WWTF	+ 37 45' 30" 0	- 85 53' 32" 0	37.758333	-85.892222
KY0045390	Airview WWTF	+ 37 45' 30" 0	- 85 53' 32" 0	37.758333	-85.892222
KY0045390	Airview WWTF	+ 37 45' 30" 0	- 85 53' 32" 0	37.758333	-85.892222
KY0045390	Airview WWTF	+ 37 45' 30" 0	- 85 53' 32" 0	37.758333	-85.892222
KY0045390	Airview WWTF	+ 37 45' 30" 0	- 85 53' 32" 0	37.758333	-85.892222
KY0045390	Airview WWTF	+ 37 45' 30" 0	- 85 53' 32" 0	37.758333	-85.892222
KY0045390	Airview WWTF	+ 37 45' 30" 0	- 85 53' 32" 0	37.758333	-85.892222
KY0045390	Airview WWTF	+ 37 45' 30" 0	- 85 53' 32" 0	37.758333	-85.892222
KY0045390	Airview WWTF	+ 37 45' 30" 0	- 85 53' 32" 0	37.758333	-85.892222
KY0045390	Airview WWTF	+ 37 45' 30" 0	- 85 53' 32" 0	37.758333	-85.892222
KY0045390	Airview WWTF	+ 37 45' 30" 0	- 85 53' 32" 0	37.758333	-85.892222
KY0045390	Airview WWTF	+ 37 45' 30" 0	- 85 53' 32" 0	37.758333	-85.892222
KY0045390	Airview WWTF	+ 37 45' 30" 0	- 85 53' 32" 0	37.758333	-85.892222
KY0045390	Airview WWTF	+ 37 45' 30" 0	- 85 53' 32" 0	37.758333	-85.892222
KY0045390	Airview WWTF	+ 37 45' 30" 0	- 85 53' 32" 0	37.758333	-85.892222
KY0045390	Airview WWTF	+ 37 45' 30" 0	- 85 53' 32" 0	37.758333	-85.892222
KY0045390	Airview WWTF	+ 37 45' 30" 0	- 85 53' 32" 0	37.758333	-85.892222
KY0045390	Airview WWTF	+ 37 45' 30" 0	- 85 53' 32" 0	37.758333	-85.892222
KY0045390	Airview WWTF	+ 37 45' 30" 0	- 85 53' 32" 0	37.758333	-85.892222
KY0045390	Airview WWTF	+ 37 45' 30" 0	- 85 53' 32" 0	37.758333	-85.892222
KY0045390	Airview WWTF	+ 37 45' 30" 0	- 85 53' 32" 0	37.758333	-85.892222
KY0045390	Airview WWTF	+ 37 45' 30" 0	- 85 53' 32" 0	37.758333	-85.892222
KY0045390	Airview WWTF	+ 37 45' 30" 0	- 85 53' 32" 0	37.758333	-85.892222
KY0045390	Airview WWTF	+ 37 45' 30" 0	- 85 53' 32" 0	37.758333	-85.892222
KY0045390	Airview WWTF	+ 37 45' 30" 0	- 85 53' 32" 0	37.758333	-85.892222
KY0045390	Airview WWTF	+ 37 45' 30" 0	- 85 53' 32" 0	37.758333	-85.892222
KY0045390	Airview WWTF	+ 37 45' 30" 0	- 85 53' 32" 0	37.758333	-85.892222

KY0045390	Airview WWTF	+ 37 45' 30" 0	- 85 53' 32" 0	37.758333	-85.892222
KY0045390	Airview WWTF	+ 37 45' 30" 0	- 85 53' 32" 0	37.758333	-85.892222
KY0045390	Airview WWTF	+ 37 45' 30" 0	- 85 53' 32" 0	37.758333	-85.892222
KY0045390	Airview WWTF	+ 37 45' 30" 0	- 85 53' 32" 0	37.758333	-85.892222
KY0045390	Airview WWTF	+ 37 45' 30" 0	- 85 53' 32" 0	37.758333	-85.892222
KY0045390	Airview WWTF	+ 37 45' 30" 0	- 85 53' 32" 0	37.758333	-85.892222
KY0045390	Airview WWTF	+ 37 45' 30" 0	- 85 53' 32" 0	37.758333	-85.892222
KY0045390	Airview WWTF	+ 37 45' 30" 0	- 85 53' 32" 0	37.758333	-85.892222
KY0045390	Airview WWTF	+ 37 45' 30" 0	- 85 53' 32" 0	37.758333	-85.892222
KY0045390	Airview WWTF	+ 37 45' 30" 0	- 85 53' 32" 0	37.758333	-85.892222
KY0045390	Airview WWTF	+ 37 45' 30" 0	- 85 53' 32" 0	37.758333	-85.892222
KY0045390	Airview WWTF	+ 37 45' 30" 0	- 85 53' 32" 0	37.758333	-85.892222
KY0045390	Airview WWTF	+ 37 45' 30" 0	- 85 53' 32" 0	37.758333	-85.892222
KY0045390	Airview WWTF	+ 37 45' 30" 0	- 85 53' 32" 0	37.758333	-85.892222
KY0045390	Airview WWTF	+ 37 45' 30" 0	- 85 53' 32" 0	37.758333	-85.892222
KY0045390	Airview WWTF	+ 37 45' 30" 0	- 85 53' 32" 0	37.758333	-85.892222
KY0045390	Airview WWTF	+ 37 45' 30" 0	- 85 53' 32" 0	37.758333	-85.892222
KY0045390	Airview WWTF	+ 37 45' 30" 0	- 85 53' 32" 0	37.758333	-85.892222
KY0045390	Airview WWTF	+ 37 45' 30" 0	- 85 53' 32" 0	37.758333	-85.892222
KY0045390	Airview WWTF	+ 37 45' 30" 0	- 85 53' 32" 0	37.758333	-85.892222
KY0045390	Airview WWTF	+ 37 45' 30" 0	- 85 53' 32" 0	37.758333	-85.892222
KY0045390	Airview WWTF	+ 37 45' 30" 0	- 85 53' 32" 0	37.758333	-85.892222
KY0045390	Airview WWTF	+ 37 45' 30" 0	- 85 53' 32" 0	37.758333	-85.892222
KY0045390	Airview WWTF	+ 37 45' 30" 0	- 85 53' 32" 0	37.758333	-85.892222
KY0045390	Airview WWTF	+ 37 45' 30" 0	- 85 53' 32" 0	37.758333	-85.892222
KY0045390	Airview WWTF	+ 37 45' 30" 0	- 85 53' 32" 0	37.758333	-85.892222
KY0045390	Airview WWTF	+ 37 45' 30" 0	- 85 53' 32" 0	37.758333	-85.892222
KY0045390	Airview WWTF	+ 37 45' 30" 0	- 85 53' 32" 0	37.758333	-85.892222
KY0045390	Airview WWTF	+ 37 45' 30" 0	- 85 53' 32" 0	37.758333	-85.892222
KY0045390	Airview WWTF	+ 37 45' 30" 0	- 85 53' 32" 0	37.758333	-85.892222
KY0045390	Airview WWTF	+ 37 45' 30" 0	- 85 53' 32" 0	37.758333	-85.892222
KY0045390	Airview WWTF	+ 37 45' 30" 0	- 85 53' 32" 0	37.758333	-85.892222
KY0045390	Airview WWTF	+ 37 45' 30" 0	- 85 53' 32" 0	37.758333	-85.892222
KY0045390	Airview WWTF	+ 37 45' 30" 0	- 85 53' 32" 0	37.758333	-85.892222
KY0045390	Airview WWTF	+ 37 45' 30" 0	- 85 53' 32" 0	37.758333	-85.892222
KY0045390	Airview WWTF	+ 37 45' 30" 0	- 85 53' 32" 0	37.758333	-85.892222
KY0045390	Airview WWTF	+ 37 45' 30" 0	- 85 53' 32" 0	37.758333	-85.892222
KY0045390	Airview WWTF	+ 37 45' 30" 0	- 85 53' 32" 0	37.758333	-85.892222
KY0045390	Airview WWTF	+ 37 45' 30" 0	- 85 53' 32" 0	37.758333	-85.892222
KY0045390	Airview WWTF	+ 37 45' 30" 0	- 85 53' 32" 0	37.758333	-85.892222
KY0045390	Airview WWTF	+ 37 45' 30" 0	- 85 53' 32" 0	37.758333	-85.892222
KY0045390	Airview WWTF	+ 37 45' 30" 0	- 85 53' 32" 0	37.758333	-85.892222
KY0045390	Airview WWTF	+ 37 45' 30" 0	- 85 53' 32" 0	37.758333	-85.892222
KY0045390	Airview WWTF	+ 37 45' 30" 0	- 85 53' 32" 0	37.758333	-85.892222
KY0045390	Airview WWTF	+ 37 45' 30" 0	- 85 53' 32" 0	37.758333	-85.892222
KY0045390	Airview WWTF	+ 37 45' 30" 0	- 85 53' 32" 0	37.758333	-85.892222
KY0045390	Airview WWTF	+ 37 45' 30" 0	- 85 53' 32" 0	37.758333	-85.892222
KY0045390	Airview WWTF	+ 37 45' 30" 0	- 85 53' 32" 0	37.758333	-85.892222
KY0045390	Airview WWTF	+ 37 45' 30" 0	- 85 53' 32" 0	37.758333	-85.892222
KY0045390	Airview WWTF	+ 37 45' 30" 0	- 85 53' 32" 0	37.758333	-85.892222
KY0045390	Airview WWTF	+ 37 45' 30" 0	- 85 53' 32" 0	37.758333	-85.892222

KY0045390	Airview WWTF	+ 37 45' 30" 0	- 85 53' 32" 0	37.758333	-85.892222
KY0045390	Airview WWTF	+ 37 45' 30" 0	- 85 53' 32" 0	37.758333	-85.892222
KY0045390	Airview WWTF	+ 37 45' 30" 0	- 85 53' 32" 0	37.758333	-85.892222
KY0045390	Airview WWTF	+ 37 45' 30" 0	- 85 53' 32" 0	37.758333	-85.892222
KY0045390	Airview WWTF	+ 37 45' 30" 0	- 85 53' 32" 0	37.758333	-85.892222
KY0045390	Airview WWTF	+ 37 45' 30" 0	- 85 53' 32" 0	37.758333	-85.892222
KY0045390	Airview WWTF	+ 37 45' 30" 0	- 85 53' 32" 0	37.758333	-85.892222
KY0045390	Airview WWTF	+ 37 45' 30" 0	- 85 53' 32" 0	37.758333	-85.892222
KY0045390	Airview WWTF	+ 37 45' 30" 0	- 85 53' 32" 0	37.758333	-85.892222
KY0045390	Airview WWTF	+ 37 45' 30" 0	- 85 53' 32" 0	37.758333	-85.892222
KY0045390	Airview WWTF	+ 37 45' 30" 0	- 85 53' 32" 0	37.758333	-85.892222
KY0045390	Airview WWTF	+ 37 45' 30" 0	- 85 53' 32" 0	37.758333	-85.892222
KY0045390	Airview WWTF	+ 37 45' 30" 0	- 85 53' 32" 0	37.758333	-85.892222
KY0045390	Airview WWTF	+ 37 45' 30" 0	- 85 53' 32" 0	37.758333	-85.892222
KY0045390	Airview WWTF	+ 37 45' 30" 0	- 85 53' 32" 0	37.758333	-85.892222
KY0045390	Airview WWTF	+ 37 45' 30" 0	- 85 53' 32" 0	37.758333	-85.892222
KY0045390	Airview WWTF	+ 37 45' 30" 0	- 85 53' 32" 0	37.758333	-85.892222
KY0045390	Airview WWTF	+ 37 45' 30" 0	- 85 53' 32" 0	37.758333	-85.892222
KY0045390	Airview WWTF	+ 37 45' 30" 0	- 85 53' 32" 0	37.758333	-85.892222
KY0045390	Airview WWTF	+ 37 45' 30" 0	- 85 53' 32" 0	37.758333	-85.892222
KY0045390	Airview WWTF	+ 37 45' 30" 0	- 85 53' 32" 0	37.758333	-85.892222
KY0045390	Airview WWTF	+ 37 45' 30" 0	- 85 53' 32" 0	37.758333	-85.892222
KY0045390	Airview WWTF	+ 37 45' 30" 0	- 85 53' 32" 0	37.758333	-85.892222
KY0045390	Airview WWTF	+ 37 45' 30" 0	- 85 53' 32" 0	37.758333	-85.892222
KY0045390	Airview WWTF	+ 37 45' 30" 0	- 85 53' 32" 0	37.758333	-85.892222
KY0045390	Airview WWTF	+ 37 45' 30" 0	- 85 53' 32" 0	37.758333	-85.892222
KY0045390	Airview WWTF	+ 37 45' 30" 0	- 85 53' 32" 0	37.758333	-85.892222
KY0045390	Airview WWTF	+ 37 45' 30" 0	- 85 53' 32" 0	37.758333	-85.892222
KY0045390	Airview WWTF	+ 37 45' 30" 0	- 85 53' 32" 0	37.758333	-85.892222
KY0045390	Airview WWTF	+ 37 45' 30" 0	- 85 53' 32" 0	37.758333	-85.892222
KY0045390	Airview WWTF	+ 37 45' 30" 0	- 85 53' 32" 0	37.758333	-85.892222
KY0045390	Airview WWTF	+ 37 45' 30" 0	- 85 53' 32" 0	37.758333	-85.892222
KY0045390	Airview WWTF	+ 37 45' 30" 0	- 85 53' 32" 0	37.758333	-85.892222
KY0045390	Airview WWTF	+ 37 45' 30" 0	- 85 53' 32" 0	37.758333	-85.892222
KY0045390	Airview WWTF	+ 37 45' 30" 0	- 85 53' 32" 0	37.758333	-85.892222
KY0045390	Airview WWTF	+ 37 45' 30" 0	- 85 53' 32" 0	37.758333	-85.892222
KY0045390	Airview WWTF	+ 37 45' 30" 0	- 85 53' 32" 0	37.758333	-85.892222
KY0045390	Airview WWTF	+ 37 45' 30" 0	- 85 53' 32" 0	37.758333	-85.892222
KY0045390	Airview WWTF	+ 37 45' 30" 0	- 85 53' 32" 0	37.758333	-85.892222
KY0045390	Airview WWTF	+ 37 45' 30" 0	- 85 53' 32" 0	37.758333	-85.892222
KY0045390	Airview WWTF	+ 37 45' 30" 0	- 85 53' 32" 0	37.758333	-85.892222
KY0045390	Airview WWTF	+ 37 45' 30" 0	- 85 53' 32" 0	37.758333	-85.892222
KY0045390	Airview WWTF	+ 37 45' 30" 0	- 85 53' 32" 0	37.758333	-85.892222
KY0045390	Airview WWTF	+ 37 45' 30" 0	- 85 53' 32" 0	37.758333	-85.892222
KY0045390	Airview WWTF	+ 37 45' 30" 0	- 85 53' 32" 0	37.758333	-85.892222
KY0045390	Airview WWTF	+ 37 45' 30" 0	- 85 53' 32" 0	37.758333	-85.892222
KY0045390	Airview WWTF	+ 37 45' 30" 0	- 85 53' 32" 0	37.758333	-85.892222
KY0045390	Airview WWTF	+ 37 45' 30" 0	- 85 53' 32" 0	37.758333	-85.892222
KY0045390	Airview WWTF	+ 37 45' 30" 0	- 85 53' 32" 0	37.758333	-85.892222
KY0045390	Airview WWTF	+ 37 45' 30" 0	- 85 53' 32" 0	37.758333	-85.892222
KY0045390	Airview WWTF	+ 37 45' 30" 0	- 85 53' 32" 0	37.758333	-85.892222

KY0045390	Airview WWTF	+ 37 45' 30" 0	- 85 53' 32" 0	37.758333	-85.892222
KY0045390	Airview WWTF	+ 37 45' 30" 0	- 85 53' 32" 0	37.758333	-85.892222
KY0045390	Airview WWTF	+ 37 45' 30" 0	- 85 53' 32" 0	37.758333	-85.892222
KY0045390	Airview WWTF	+ 37 45' 30" 0	- 85 53' 32" 0	37.758333	-85.892222
KY0045390	Airview WWTF	+ 37 45' 30" 0	- 85 53' 32" 0	37.758333	-85.892222
KY0045390	Airview WWTF	+ 37 45' 30" 0	- 85 53' 32" 0	37.758333	-85.892222
KY0045390	Airview WWTF	+ 37 45' 30" 0	- 85 53' 32" 0	37.758333	-85.892222
KY0045390	Airview WWTF	+ 37 45' 30" 0	- 85 53' 32" 0	37.758333	-85.892222
KY0045390	Airview WWTF	+ 37 45' 30" 0	- 85 53' 32" 0	37.758333	-85.892222
KY0045390	Airview WWTF	+ 37 45' 30" 0	- 85 53' 32" 0	37.758333	-85.892222
KY0045390	Airview WWTF	+ 37 45' 30" 0	- 85 53' 32" 0	37.758333	-85.892222
KY0045390	Airview WWTF	+ 37 45' 30" 0	- 85 53' 32" 0	37.758333	-85.892222
KY0045390	Airview WWTF	+ 37 45' 30" 0	- 85 53' 32" 0	37.758333	-85.892222
KY0045390	Airview WWTF	+ 37 45' 30" 0	- 85 53' 32" 0	37.758333	-85.892222
KY0045390	Airview WWTF	+ 37 45' 30" 0	- 85 53' 32" 0	37.758333	-85.892222
KY0045390	Airview WWTF	+ 37 45' 30" 0	- 85 53' 32" 0	37.758333	-85.892222
KY0045390	Airview WWTF	+ 37 45' 30" 0	- 85 53' 32" 0	37.758333	-85.892222
KY0045390	Airview WWTF	+ 37 45' 30" 0	- 85 53' 32" 0	37.758333	-85.892222
KY0045390	Airview WWTF	+ 37 45' 30" 0	- 85 53' 32" 0	37.758333	-85.892222
KY0045390	Airview WWTF	+ 37 45' 30" 0	- 85 53' 32" 0	37.758333	-85.892222
KY0045390	Airview WWTF	+ 37 45' 30" 0	- 85 53' 32" 0	37.758333	-85.892222
KY0045390	Airview WWTF	+ 37 45' 30" 0	- 85 53' 32" 0	37.758333	-85.892222
KY0045390	Airview WWTF	+ 37 45' 30" 0	- 85 53' 32" 0	37.758333	-85.892222
KY0045390	Airview WWTF	+ 37 45' 30" 0	- 85 53' 32" 0	37.758333	-85.892222
KY0045390	Airview WWTF	+ 37 45' 30" 0	- 85 53' 32" 0	37.758333	-85.892222
KY0045390	Airview WWTF	+ 37 45' 30" 0	- 85 53' 32" 0	37.758333	-85.892222
KY0045390	Airview WWTF	+ 37 45' 30" 0	- 85 53' 32" 0	37.758333	-85.892222
KY0045390	Airview WWTF	+ 37 45' 30" 0	- 85 53' 32" 0	37.758333	-85.892222
KY0045390	Airview WWTF	+ 37 45' 30" 0	- 85 53' 32" 0	37.758333	-85.892222
KY0045390	Airview WWTF	+ 37 45' 30" 0	- 85 53' 32" 0	37.758333	-85.892222
KY0045390	Airview WWTF	+ 37 45' 30" 0	- 85 53' 32" 0	37.758333	-85.892222
KY0045390	Airview WWTF	+ 37 45' 30" 0	- 85 53' 32" 0	37.758333	-85.892222
KY0045390	Airview WWTF	+ 37 45' 30" 0	- 85 53' 32" 0	37.758333	-85.892222
KY0045390	Airview WWTF	+ 37 45' 30" 0	- 85 53' 32" 0	37.758333	-85.892222
KY0045390	Airview WWTF	+ 37 45' 30" 0	- 85 53' 32" 0	37.758333	-85.892222
KY0045390	Airview WWTF	+ 37 45' 30" 0	- 85 53' 32" 0	37.758333	-85.892222
KY0045390	Airview WWTF	+ 37 45' 30" 0	- 85 53' 32" 0	37.758333	-85.892222
KY0045390	Airview WWTF	+ 37 45' 30" 0	- 85 53' 32" 0	37.758333	-85.892222
KY0045390	Airview WWTF	+ 37 45' 30" 0	- 85 53' 32" 0	37.758333	-85.892222
KY0045390	Airview WWTF	+ 37 45' 30" 0	- 85 53' 32" 0	37.758333	-85.892222
KY0045390	Airview WWTF	+ 37 45' 30" 0	- 85 53' 32" 0	37.758333	-85.892222
KY0045390	Airview WWTF	+ 37 45' 30" 0	- 85 53' 32" 0	37.758333	-85.892222
KY0045390	Airview WWTF	+ 37 45' 30" 0	- 85 53' 32" 0	37.758333	-85.892222
KY0045390	Airview WWTF	+ 37 45' 30" 0	- 85 53' 32" 0	37.758333	-85.892222
KY0045390	Airview WWTF	+ 37 45' 30" 0	- 85 53' 32" 0	37.758333	-85.892222
KY0045390	Airview WWTF	+ 37 45' 30" 0	- 85 53' 32" 0	37.758333	-85.892222
KY0045390	Airview WWTF	+ 37 45' 30" 0	- 85 53' 32" 0	37.758333	-85.892222
KY0045390	Airview WWTF	+ 37 45' 30" 0	- 85 53' 32" 0	37.758333	-85.892222
KY0045390	Airview WWTF	+ 37 45' 30" 0	- 85 53' 32" 0	37.758333	-85.892222
KY0045390	Airview WWTF	+ 37 45' 30" 0	- 85 53' 32" 0	37.758333	-85.892222
KY0045390	Airview WWTF	+ 37 45' 30" 0	- 85 53' 32" 0	37.758333	-85.892222

KY0045390	Airview WWTF	+ 37 45' 30" 0	- 85 53' 32" 0	37.758333	-85.892222
KY0045390	Airview WWTF	+ 37 45' 30" 0	- 85 53' 32" 0	37.758333	-85.892222
KY0045390	Airview WWTF	+ 37 45' 30" 0	- 85 53' 32" 0	37.758333	-85.892222
KY0045390	Airview WWTF	+ 37 45' 30" 0	- 85 53' 32" 0	37.758333	-85.892222
KY0045390	Airview WWTF	+ 37 45' 30" 0	- 85 53' 32" 0	37.758333	-85.892222
KY0045390	Airview WWTF	+ 37 45' 30" 0	- 85 53' 32" 0	37.758333	-85.892222
KY0045390	Airview WWTF	+ 37 45' 30" 0	- 85 53' 32" 0	37.758333	-85.892222
KY0045390	Airview WWTF	+ 37 45' 30" 0	- 85 53' 32" 0	37.758333	-85.892222
KY0045390	Airview WWTF	+ 37 45' 30" 0	- 85 53' 32" 0	37.758333	-85.892222
KY0045390	Airview WWTF	+ 37 45' 30" 0	- 85 53' 32" 0	37.758333	-85.892222
KY0045390	Airview WWTF	+ 37 45' 30" 0	- 85 53' 32" 0	37.758333	-85.892222
KY0045390	Airview WWTF	+ 37 45' 30" 0	- 85 53' 32" 0	37.758333	-85.892222
KY0045390	Airview WWTF	+ 37 45' 30" 0	- 85 53' 32" 0	37.758333	-85.892222
KY0045390	Airview WWTF	+ 37 45' 30" 0	- 85 53' 32" 0	37.758333	-85.892222
KY0045390	Airview WWTF	+ 37 45' 30" 0	- 85 53' 32" 0	37.758333	-85.892222
KY0045390	Airview WWTF	+ 37 45' 30" 0	- 85 53' 32" 0	37.758333	-85.892222
KY0045390	Airview WWTF	+ 37 45' 30" 0	- 85 53' 32" 0	37.758333	-85.892222
KY0045390	Airview WWTF	+ 37 45' 30" 0	- 85 53' 32" 0	37.758333	-85.892222
KY0045390	Airview WWTF	+ 37 45' 30" 0	- 85 53' 32" 0	37.758333	-85.892222
KY0045390	Airview WWTF	+ 37 45' 30" 0	- 85 53' 32" 0	37.758333	-85.892222
KY0045390	Airview WWTF	+ 37 45' 30" 0	- 85 53' 32" 0	37.758333	-85.892222
KY0045390	Airview WWTF	+ 37 45' 30" 0	- 85 53' 32" 0	37.758333	-85.892222
KY0045390	Airview WWTF	+ 37 45' 30" 0	- 85 53' 32" 0	37.758333	-85.892222
KY0045390	Airview WWTF	+ 37 45' 30" 0	- 85 53' 32" 0	37.758333	-85.892222
KY0045390	Airview WWTF	+ 37 45' 30" 0	- 85 53' 32" 0	37.758333	-85.892222
KY0045390	Airview WWTF	+ 37 45' 30" 0	- 85 53' 32" 0	37.758333	-85.892222
KY0045390	Airview WWTF	+ 37 45' 30" 0	- 85 53' 32" 0	37.758333	-85.892222
KY0045390	Airview WWTF	+ 37 45' 30" 0	- 85 53' 32" 0	37.758333	-85.892222
KY0045390	Airview WWTF	+ 37 45' 30" 0	- 85 53' 32" 0	37.758333	-85.892222
KY0045390	Airview WWTF	+ 37 45' 30" 0	- 85 53' 32" 0	37.758333	-85.892222
KY0045390	Airview WWTF	+ 37 45' 30" 0	- 85 53' 32" 0	37.758333	-85.892222
KY0045390	Airview WWTF	+ 37 45' 30" 0	- 85 53' 32" 0	37.758333	-85.892222
KY0045390	Airview WWTF	+ 37 45' 30" 0	- 85 53' 32" 0	37.758333	-85.892222
KY0045390	Airview WWTF	+ 37 45' 30" 0	- 85 53' 32" 0	37.758333	-85.892222
KY0045390	Airview WWTF	+ 37 45' 30" 0	- 85 53' 32" 0	37.758333	-85.892222
KY0045390	Airview WWTF	+ 37 45' 30" 0	- 85 53' 32" 0	37.758333	-85.892222
KY0045390	Airview WWTF	+ 37 45' 30" 0	- 85 53' 32" 0	37.758333	-85.892222
KY0045390	Airview WWTF	+ 37 45' 30" 0	- 85 53' 32" 0	37.758333	-85.892222
KY0045390	Airview WWTF	+ 37 45' 30" 0	- 85 53' 32" 0	37.758333	-85.892222
KY0045390	Airview WWTF	+ 37 45' 30" 0	- 85 53' 32" 0	37.758333	-85.892222
KY0045390	Airview WWTF	+ 37 45' 30" 0	- 85 53' 32" 0	37.758333	-85.892222
KY0045390	Airview WWTF	+ 37 45' 30" 0	- 85 53' 32" 0	37.758333	-85.892222
KY0045390	Airview WWTF	+ 37 45' 30" 0	- 85 53' 32" 0	37.758333	-85.892222
KY0045390	Airview WWTF	+ 37 45' 30" 0	- 85 53' 32" 0	37.758333	-85.892222
KY0045390	Airview WWTF	+ 37 45' 30" 0	- 85 53' 32" 0	37.758333	-85.892222
KY0045390	Airview WWTF	+ 37 45' 30" 0	- 85 53' 32" 0	37.758333	-85.892222
KY0045390	Airview WWTF	+ 37 45' 30" 0	- 85 53' 32" 0	37.758333	-85.892222
KY0045390	Airview WWTF	+ 37 45' 30" 0	- 85 53' 32" 0	37.758333	-85.892222
KY0045390	Airview WWTF	+ 37 45' 30" 0	- 85 53' 32" 0	37.758333	-85.892222
KY0045390	Airview WWTF	+ 37 45' 30" 0	- 85 53' 32" 0	37.758333	-85.892222
KY0045390	Airview WWTF	+ 37 45' 30" 0	- 85 53' 32" 0	37.758333	-85.892222

KY0045390	Airview WWTF	+ 37 45' 30" 0	- 85 53' 32" 0	37.758333	-85.892222
KY0045390	Airview WWTF	+ 37 45' 30" 0	- 85 53' 32" 0	37.758333	-85.892222
KY0045390	Airview WWTF	+ 37 45' 30" 0	- 85 53' 32" 0	37.758333	-85.892222
KY0045390	Airview WWTF	+ 37 45' 30" 0	- 85 53' 32" 0	37.758333	-85.892222
KY0045390	Airview WWTF	+ 37 45' 30" 0	- 85 53' 32" 0	37.758333	-85.892222
KY0045390	Airview WWTF	+ 37 45' 30" 0	- 85 53' 32" 0	37.758333	-85.892222
KY0045390	Airview WWTF	+ 37 45' 30" 0	- 85 53' 32" 0	37.758333	-85.892222
KY0045390	Airview WWTF	+ 37 45' 30" 0	- 85 53' 32" 0	37.758333	-85.892222
KY0045390	Airview WWTF	+ 37 45' 30" 0	- 85 53' 32" 0	37.758333	-85.892222
KY0045390	Airview WWTF	+ 37 45' 30" 0	- 85 53' 32" 0	37.758333	-85.892222
KY0045390	Airview WWTF	+ 37 45' 30" 0	- 85 53' 32" 0	37.758333	-85.892222
KY0045390	Airview WWTF	+ 37 45' 30" 0	- 85 53' 32" 0	37.758333	-85.892222
KY0045390	Airview WWTF	+ 37 45' 30" 0	- 85 53' 32" 0	37.758333	-85.892222
KY0045390	Airview WWTF	+ 37 45' 30" 0	- 85 53' 32" 0	37.758333	-85.892222
KY0045390	Airview WWTF	+ 37 45' 30" 0	- 85 53' 32" 0	37.758333	-85.892222
KY0045390	Airview WWTF	+ 37 45' 30" 0	- 85 53' 32" 0	37.758333	-85.892222
KY0045390	Airview WWTF	+ 37 45' 30" 0	- 85 53' 32" 0	37.758333	-85.892222
KY0045390	Airview WWTF	+ 37 45' 30" 0	- 85 53' 32" 0	37.758333	-85.892222
KY0045390	Airview WWTF	+ 37 45' 30" 0	- 85 53' 32" 0	37.758333	-85.892222
KY0045390	Airview WWTF	+ 37 45' 30" 0	- 85 53' 32" 0	37.758333	-85.892222
KY0045390	Airview WWTF	+ 37 45' 30" 0	- 85 53' 32" 0	37.758333	-85.892222
KY0045390	Airview WWTF	+ 37 45' 30" 0	- 85 53' 32" 0	37.758333	-85.892222
KY0045390	Airview WWTF	+ 37 45' 30" 0	- 85 53' 32" 0	37.758333	-85.892222
KY0045390	Airview WWTF	+ 37 45' 30" 0	- 85 53' 32" 0	37.758333	-85.892222
KY0045390	Airview WWTF	+ 37 45' 30" 0	- 85 53' 32" 0	37.758333	-85.892222
KY0045390	Airview WWTF	+ 37 45' 30" 0	- 85 53' 32" 0	37.758333	-85.892222
KY0045390	Airview WWTF	+ 37 45' 30" 0	- 85 53' 32" 0	37.758333	-85.892222
KY0045390	Airview WWTF	+ 37 45' 30" 0	- 85 53' 32" 0	37.758333	-85.892222
KY0045390	Airview WWTF	+ 37 45' 30" 0	- 85 53' 32" 0	37.758333	-85.892222
KY0045390	Airview WWTF	+ 37 45' 30" 0	- 85 53' 32" 0	37.758333	-85.892222
KY0045390	Airview WWTF	+ 37 45' 30" 0	- 85 53' 32" 0	37.758333	-85.892222
KY0045390	Airview WWTF	+ 37 45' 30" 0	- 85 53' 32" 0	37.758333	-85.892222
KY0045390	Airview WWTF	+ 37 45' 30" 0	- 85 53' 32" 0	37.758333	-85.892222
KY0045390	Airview WWTF	+ 37 45' 30" 0	- 85 53' 32" 0	37.758333	-85.892222
KY0045390	Airview WWTF	+ 37 45' 30" 0	- 85 53' 32" 0	37.758333	-85.892222
KY0045390	Airview WWTF	+ 37 45' 30" 0	- 85 53' 32" 0	37.758333	-85.892222
KY0045390	Airview WWTF	+ 37 45' 30" 0	- 85 53' 32" 0	37.758333	-85.892222
KY0045390	Airview WWTF	+ 37 45' 30" 0	- 85 53' 32" 0	37.758333	-85.892222
KY0045390	Airview WWTF	+ 37 45' 30" 0	- 85 53' 32" 0	37.758333	-85.892222
KY0045390	Airview WWTF	+ 37 45' 30" 0	- 85 53' 32" 0	37.758333	-85.892222
KY0045390	Airview WWTF	+ 37 45' 30" 0	- 85 53' 32" 0	37.758333	-85.892222
KY0045390	Airview WWTF	+ 37 45' 30" 0	- 85 53' 32" 0	37.758333	-85.892222
KY0045390	Airview WWTF	+ 37 45' 30" 0	- 85 53' 32" 0	37.758333	-85.892222
KY0045390	Airview WWTF	+ 37 45' 30" 0	- 85 53' 32" 0	37.758333	-85.892222
KY0045390	Airview WWTF	+ 37 45' 30" 0	- 85 53' 32" 0	37.758333	-85.892222
KY0045390	Airview WWTF	+ 37 45' 30" 0	- 85 53' 32" 0	37.758333	-85.892222
KY0045390	Airview WWTF	+ 37 45' 30" 0	- 85 53' 32" 0	37.758333	-85.892222
KY0045390	Airview WWTF	+ 37 45' 30" 0	- 85 53' 32" 0	37.758333	-85.892222
KY0045390	Airview WWTF	+ 37 45' 30" 0	- 85 53' 32" 0	37.758333	-85.892222
KY0045390	Airview WWTF	+ 37 45' 30" 0	- 85 53' 32" 0	37.758333	-85.892222
KY0045390	Airview WWTF	+ 37 45' 30" 0	- 85 53' 32" 0	37.758333	-85.892222

KY0045390	Airview WWTF	+ 37 45' 30" 0	- 85 53' 32" 0	37.758333	-85.892222
KY0045390	Airview WWTF	+ 37 45' 30" 0	- 85 53' 32" 0	37.758333	-85.892222
KY0045390	Airview WWTF	+ 37 45' 30" 0	- 85 53' 32" 0	37.758333	-85.892222
KY0045390	Airview WWTF	+ 37 45' 30" 0	- 85 53' 32" 0	37.758333	-85.892222
KY0045390	Airview WWTF	+ 37 45' 30" 0	- 85 53' 32" 0	37.758333	-85.892222
KY0045390	Airview WWTF	+ 37 45' 30" 0	- 85 53' 32" 0	37.758333	-85.892222
KY0045390	Airview WWTF	+ 37 45' 30" 0	- 85 53' 32" 0	37.758333	-85.892222
KY0045390	Airview WWTF	+ 37 45' 30" 0	- 85 53' 32" 0	37.758333	-85.892222
KY0045390	Airview WWTF	+ 37 45' 30" 0	- 85 53' 32" 0	37.758333	-85.892222
KY0045390	Airview WWTF	+ 37 45' 30" 0	- 85 53' 32" 0	37.758333	-85.892222
KY0045390	Airview WWTF	+ 37 45' 30" 0	- 85 53' 32" 0	37.758333	-85.892222
KY0045390	Airview WWTF	+ 37 45' 30" 0	- 85 53' 32" 0	37.758333	-85.892222
KY0045390	Airview WWTF	+ 37 45' 30" 0	- 85 53' 32" 0	37.758333	-85.892222
KY0045390	Airview WWTF	+ 37 45' 30" 0	- 85 53' 32" 0	37.758333	-85.892222
KY0045390	Airview WWTF	+ 37 45' 30" 0	- 85 53' 32" 0	37.758333	-85.892222
KY0045390	Airview WWTF	+ 37 45' 30" 0	- 85 53' 32" 0	37.758333	-85.892222
KY0045390	Airview WWTF	+ 37 45' 30" 0	- 85 53' 32" 0	37.758333	-85.892222
KY0045390	Airview WWTF	+ 37 45' 30" 0	- 85 53' 32" 0	37.758333	-85.892222
KY0045390	Airview WWTF	+ 37 45' 30" 0	- 85 53' 32" 0	37.758333	-85.892222
KY0045390	Airview WWTF	+ 37 45' 30" 0	- 85 53' 32" 0	37.758333	-85.892222
KY0045390	Airview WWTF	+ 37 45' 30" 0	- 85 53' 32" 0	37.758333	-85.892222
KY0045390	Airview WWTF	+ 37 45' 30" 0	- 85 53' 32" 0	37.758333	-85.892222
KY0045390	Airview WWTF	+ 37 45' 30" 0	- 85 53' 32" 0	37.758333	-85.892222
KY0045390	Airview WWTF	+ 37 45' 30" 0	- 85 53' 32" 0	37.758333	-85.892222
KY0045390	Airview WWTF	+ 37 45' 30" 0	- 85 53' 32" 0	37.758333	-85.892222
KY0045390	Airview WWTF	+ 37 45' 30" 0	- 85 53' 32" 0	37.758333	-85.892222
KY0045390	Airview WWTF	+ 37 45' 30" 0	- 85 53' 32" 0	37.758333	-85.892222
KY0045390	Airview WWTF	+ 37 45' 30" 0	- 85 53' 32" 0	37.758333	-85.892222
KY0045390	Airview WWTF	+ 37 45' 30" 0	- 85 53' 32" 0	37.758333	-85.892222
KY0045390	Airview WWTF	+ 37 45' 30" 0	- 85 53' 32" 0	37.758333	-85.892222
KY0045390	Airview WWTF	+ 37 45' 30" 0	- 85 53' 32" 0	37.758333	-85.892222
KY0045390	Airview WWTF	+ 37 45' 30" 0	- 85 53' 32" 0	37.758333	-85.892222
KY0045390	Airview WWTF	+ 37 45' 30" 0	- 85 53' 32" 0	37.758333	-85.892222
KY0045390	Airview WWTF	+ 37 45' 30" 0	- 85 53' 32" 0	37.758333	-85.892222
KY0045390	Airview WWTF	+ 37 45' 30" 0	- 85 53' 32" 0	37.758333	-85.892222
KY0045390	Airview WWTF	+ 37 45' 30" 0	- 85 53' 32" 0	37.758333	-85.892222
KY0045390	Airview WWTF	+ 37 45' 30" 0	- 85 53' 32" 0	37.758333	-85.892222
KY0045390	Airview WWTF	+ 37 45' 30" 0	- 85 53' 32" 0	37.758333	-85.892222
KY0045390	Airview WWTF	+ 37 45' 30" 0	- 85 53' 32" 0	37.758333	-85.892222
KY0045390	Airview WWTF	+ 37 45' 30" 0	- 85 53' 32" 0	37.758333	-85.892222
KY0045390	Airview WWTF	+ 37 45' 30" 0	- 85 53' 32" 0	37.758333	-85.892222
KY0045390	Airview WWTF	+ 37 45' 30" 0	- 85 53' 32" 0	37.758333	-85.892222
KY0045390	Airview WWTF	+ 37 45' 30" 0	- 85 53' 32" 0	37.758333	-85.892222
KY0045390	Airview WWTF	+ 37 45' 30" 0	- 85 53' 32" 0	37.758333	-85.892222
KY0045390	Airview WWTF	+ 37 45' 30" 0	- 85 53' 32" 0	37.758333	-85.892222
KY0045390	Airview WWTF	+ 37 45' 30" 0	- 85 53' 32" 0	37.758333	-85.892222
KY0045390	Airview WWTF	+ 37 45' 30" 0	- 85 53' 32" 0	37.758333	-85.892222
KY0045390	Airview WWTF	+ 37 45' 30" 0	- 85 53' 32" 0	37.758333	-85.892222
KY0045390	Airview WWTF	+ 37 45' 30" 0	- 85 53' 32" 0	37.758333	-85.892222
KY0045390	Airview WWTF	+ 37 45' 30" 0	- 85 53' 32" 0	37.758333	-85.892222
KY0045390	Airview WWTF	+ 37 45' 30" 0	- 85 53' 32" 0	37.758333	-85.892222

KY0045390	Airview WWTF	+ 37 45' 30" 0	- 85 53' 32" 0	37.758333	-85.892222
KY0045390	Airview WWTF	+ 37 45' 30" 0	- 85 53' 32" 0	37.758333	-85.892222
KY0045390	Airview WWTF	+ 37 45' 30" 0	- 85 53' 32" 0	37.758333	-85.892222
KY0045390	Airview WWTF	+ 37 45' 30" 0	- 85 53' 32" 0	37.758333	-85.892222
KY0045390	Airview WWTF	+ 37 45' 30" 0	- 85 53' 32" 0	37.758333	-85.892222
KY0045390	Airview WWTF	+ 37 45' 30" 0	- 85 53' 32" 0	37.758333	-85.892222
KY0045390	Airview WWTF	+ 37 45' 30" 0	- 85 53' 32" 0	37.758333	-85.892222
KY0045390	Airview WWTF	+ 37 45' 30" 0	- 85 53' 32" 0	37.758333	-85.892222
KY0045390	Airview WWTF	+ 37 45' 30" 0	- 85 53' 32" 0	37.758333	-85.892222
KY0045390	Airview WWTF	+ 37 45' 30" 0	- 85 53' 32" 0	37.758333	-85.892222
KY0045390	Airview WWTF	+ 37 45' 30" 0	- 85 53' 32" 0	37.758333	-85.892222
KY0045390	Airview WWTF	+ 37 45' 30" 0	- 85 53' 32" 0	37.758333	-85.892222
KY0045390	Airview WWTF	+ 37 45' 30" 0	- 85 53' 32" 0	37.758333	-85.892222
KY0045390	Airview WWTF	+ 37 45' 30" 0	- 85 53' 32" 0	37.758333	-85.892222
KY0045390	Airview WWTF	+ 37 45' 30" 0	- 85 53' 32" 0	37.758333	-85.892222
KY0045390	Airview WWTF	+ 37 45' 30" 0	- 85 53' 32" 0	37.758333	-85.892222
KY0045390	Airview WWTF	+ 37 45' 30" 0	- 85 53' 32" 0	37.758333	-85.892222
KY0045390	Airview WWTF	+ 37 45' 30" 0	- 85 53' 32" 0	37.758333	-85.892222
KY0045390	Airview WWTF	+ 37 45' 30" 0	- 85 53' 32" 0	37.758333	-85.892222
KY0045390	Airview WWTF	+ 37 45' 30" 0	- 85 53' 32" 0	37.758333	-85.892222
KY0045390	Airview WWTF	+ 37 45' 30" 0	- 85 53' 32" 0	37.758333	-85.892222
KY0045390	Airview WWTF	+ 37 45' 30" 0	- 85 53' 32" 0	37.758333	-85.892222
KY0045390	Airview WWTF	+ 37 45' 30" 0	- 85 53' 32" 0	37.758333	-85.892222
KY0045390	Airview WWTF	+ 37 45' 30" 0	- 85 53' 32" 0	37.758333	-85.892222
KY0045390	Airview WWTF	+ 37 45' 30" 0	- 85 53' 32" 0	37.758333	-85.892222
KY0045390	Airview WWTF	+ 37 45' 30" 0	- 85 53' 32" 0	37.758333	-85.892222
KY0045390	Airview WWTF	+ 37 45' 30" 0	- 85 53' 32" 0	37.758333	-85.892222
KY0045390	Airview WWTF	+ 37 45' 30" 0	- 85 53' 32" 0	37.758333	-85.892222
KY0045390	Airview WWTF	+ 37 45' 30" 0	- 85 53' 32" 0	37.758333	-85.892222
KY0045390	Airview WWTF	+ 37 45' 30" 0	- 85 53' 32" 0	37.758333	-85.892222
KY0045390	Airview WWTF	+ 37 45' 30" 0	- 85 53' 32" 0	37.758333	-85.892222
KY0045390	Airview WWTF	+ 37 45' 30" 0	- 85 53' 32" 0	37.758333	-85.892222
KY0045390	Airview WWTF	+ 37 45' 30" 0	- 85 53' 32" 0	37.758333	-85.892222
KY0045390	Airview WWTF	+ 37 45' 30" 0	- 85 53' 32" 0	37.758333	-85.892222
KY0045390	Airview WWTF	+ 37 45' 30" 0	- 85 53' 32" 0	37.758333	-85.892222
KY0045390	Airview WWTF	+ 37 45' 30" 0	- 85 53' 32" 0	37.758333	-85.892222
KY0045390	Airview WWTF	+ 37 45' 30" 0	- 85 53' 32" 0	37.758333	-85.892222
KY0045390	Airview WWTF	+ 37 45' 30" 0	- 85 53' 32" 0	37.758333	-85.892222
KY0045390	Airview WWTF	+ 37 45' 30" 0	- 85 53' 32" 0	37.758333	-85.892222
KY0045390	Airview WWTF	+ 37 45' 30" 0	- 85 53' 32" 0	37.758333	-85.892222
KY0045390	Airview WWTF	+ 37 45' 30" 0	- 85 53' 32" 0	37.758333	-85.892222
KY0045390	Airview WWTF	+ 37 45' 30" 0	- 85 53' 32" 0	37.758333	-85.892222
KY0045390	Airview WWTF	+ 37 45' 30" 0	- 85 53' 32" 0	37.758333	-85.892222
KY0045390	Airview WWTF	+ 37 45' 30" 0	- 85 53' 32" 0	37.758333	-85.892222
KY0045390	Airview WWTF	+ 37 45' 30" 0	- 85 53' 32" 0	37.758333	-85.892222
KY0045390	Airview WWTF	+ 37 45' 30" 0	- 85 53' 32" 0	37.758333	-85.892222
KY0045390	Airview WWTF	+ 37 45' 30" 0	- 85 53' 32" 0	37.758333	-85.892222
KY0045390	Airview WWTF	+ 37 45' 30" 0	- 85 53' 32" 0	37.758333	-85.892222
KY0045390	Airview WWTF	+ 37 45' 30" 0	- 85 53' 32" 0	37.758333	-85.892222
KY0045390	Airview WWTF	+ 37 45' 30" 0	- 85 53' 32" 0	37.758333	-85.892222
KY0045390	Airview WWTF	+ 37 45' 30" 0	- 85 53' 32" 0	37.758333	-85.892222

KY0045390	Airview WWTF	+ 37 45' 30" 0	- 85 53' 32" 0	37.758333	-85.892222
KY0045390	Airview WWTF	+ 37 45' 30" 0	- 85 53' 32" 0	37.758333	-85.892222
KY0045390	Airview WWTF	+ 37 45' 30" 0	- 85 53' 32" 0	37.758333	-85.892222
KY0045390	Airview WWTF	+ 37 45' 30" 0	- 85 53' 32" 0	37.758333	-85.892222
KY0045390	Airview WWTF	+ 37 45' 30" 0	- 85 53' 32" 0	37.758333	-85.892222
KY0045390	Airview WWTF	+ 37 45' 30" 0	- 85 53' 32" 0	37.758333	-85.892222
KY0045390	Airview WWTF	+ 37 45' 30" 0	- 85 53' 32" 0	37.758333	-85.892222
KY0045390	Airview WWTF	+ 37 45' 30" 0	- 85 53' 32" 0	37.758333	-85.892222
KY0045390	Airview WWTF	+ 37 45' 30" 0	- 85 53' 32" 0	37.758333	-85.892222
KY0045390	Airview WWTF	+ 37 45' 30" 0	- 85 53' 32" 0	37.758333	-85.892222
KY0045390	Airview WWTF	+ 37 45' 30" 0	- 85 53' 32" 0	37.758333	-85.892222
KY0045390	Airview WWTF	+ 37 45' 30" 0	- 85 53' 32" 0	37.758333	-85.892222
KY0045390	Airview WWTF	+ 37 45' 30" 0	- 85 53' 32" 0	37.758333	-85.892222
KY0045390	Airview WWTF	+ 37 45' 30" 0	- 85 53' 32" 0	37.758333	-85.892222
KY0045390	Airview WWTF	+ 37 45' 30" 0	- 85 53' 32" 0	37.758333	-85.892222
KY0045390	Airview WWTF	+ 37 45' 30" 0	- 85 53' 32" 0	37.758333	-85.892222
KY0045390	Airview WWTF	+ 37 45' 30" 0	- 85 53' 32" 0	37.758333	-85.892222
KY0045390	Airview WWTF	+ 37 45' 30" 0	- 85 53' 32" 0	37.758333	-85.892222
KY0045390	Airview WWTF	+ 37 45' 30" 0	- 85 53' 32" 0	37.758333	-85.892222
KY0045390	Airview WWTF	+ 37 45' 30" 0	- 85 53' 32" 0	37.758333	-85.892222
KY0045390	Airview WWTF	+ 37 45' 30" 0	- 85 53' 32" 0	37.758333	-85.892222
KY0045390	Airview WWTF	+ 37 45' 30" 0	- 85 53' 32" 0	37.758333	-85.892222
KY0045390	Airview WWTF	+ 37 45' 30" 0	- 85 53' 32" 0	37.758333	-85.892222
KY0045390	Airview WWTF	+ 37 45' 30" 0	- 85 53' 32" 0	37.758333	-85.892222
KY0045390	Airview WWTF	+ 37 45' 30" 0	- 85 53' 32" 0	37.758333	-85.892222
KY0045390	Airview WWTF	+ 37 45' 30" 0	- 85 53' 32" 0	37.758333	-85.892222
KY0045390	Airview WWTF	+ 37 45' 30" 0	- 85 53' 32" 0	37.758333	-85.892222
KY0045390	Airview WWTF	+ 37 45' 30" 0	- 85 53' 32" 0	37.758333	-85.892222
KY0045390	Airview WWTF	+ 37 45' 30" 0	- 85 53' 32" 0	37.758333	-85.892222
KY0045390	Airview WWTF	+ 37 45' 30" 0	- 85 53' 32" 0	37.758333	-85.892222
KY0045390	Airview WWTF	+ 37 45' 30" 0	- 85 53' 32" 0	37.758333	-85.892222
KY0045390	Airview WWTF	+ 37 45' 30" 0	- 85 53' 32" 0	37.758333	-85.892222
KY0045390	Airview WWTF	+ 37 45' 30" 0	- 85 53' 32" 0	37.758333	-85.892222
KY0045390	Airview WWTF	+ 37 45' 30" 0	- 85 53' 32" 0	37.758333	-85.892222
KY0045390	Airview WWTF	+ 37 45' 30" 0	- 85 53' 32" 0	37.758333	-85.892222
KY0045390	Airview WWTF	+ 37 45' 30" 0	- 85 53' 32" 0	37.758333	-85.892222
KY0045390	Airview WWTF	+ 37 45' 30" 0	- 85 53' 32" 0	37.758333	-85.892222
KY0045390	Airview WWTF	+ 37 45' 30" 0	- 85 53' 32" 0	37.758333	-85.892222
KY0045390	Airview WWTF	+ 37 45' 30" 0	- 85 53' 32" 0	37.758333	-85.892222
KY0045390	Airview WWTF	+ 37 45' 30" 0	- 85 53' 32" 0	37.758333	-85.892222
KY0045390	Airview WWTF	+ 37 45' 30" 0	- 85 53' 32" 0	37.758333	-85.892222
KY0045390	Airview WWTF	+ 37 45' 30" 0	- 85 53' 32" 0	37.758333	-85.892222
KY0045390	Airview WWTF	+ 37 45' 30" 0	- 85 53' 32" 0	37.758333	-85.892222
KY0045390	Airview WWTF	+ 37 45' 30" 0	- 85 53' 32" 0	37.758333	-85.892222
KY0045390	Airview WWTF	+ 37 45' 30" 0	- 85 53' 32" 0	37.758333	-85.892222
KY0045390	Airview WWTF	+ 37 45' 30" 0	- 85 53' 32" 0	37.758333	-85.892222
KY0045390	Airview WWTF	+ 37 45' 30" 0	- 85 53' 32" 0	37.758333	-85.892222
KY0045390	Airview WWTF	+ 37 45' 30" 0	- 85 53' 32" 0	37.758333	-85.892222
KY0045390	Airview WWTF	+ 37 45' 30" 0	- 85 53' 32" 0	37.758333	-85.892222
KY0045390	Airview WWTF	+ 37 45' 30" 0	- 85 53' 32" 0	37.758333	-85.892222
KY0045390	Airview WWTF	+ 37 45' 30" 0	- 85 53' 32" 0	37.758333	-85.892222

KY0045390	Airview WWTF	+ 37 45' 30" 0	- 85 53' 32" 0	37.758333	-85.892222
KY0045390	Airview WWTF	+ 37 45' 30" 0	- 85 53' 32" 0	37.758333	-85.892222
KY0045390	Airview WWTF	+ 37 45' 30" 0	- 85 53' 32" 0	37.758333	-85.892222
KY0045390	Airview WWTF	+ 37 45' 30" 0	- 85 53' 32" 0	37.758333	-85.892222
KY0045390	Airview WWTF	+ 37 45' 30" 0	- 85 53' 32" 0	37.758333	-85.892222
KY0045390	Airview WWTF	+ 37 45' 30" 0	- 85 53' 32" 0	37.758333	-85.892222
KY0045390	Airview WWTF	+ 37 45' 30" 0	- 85 53' 32" 0	37.758333	-85.892222
KY0045390	Airview WWTF	+ 37 45' 30" 0	- 85 53' 32" 0	37.758333	-85.892222
KY0045390	Airview WWTF	+ 37 45' 30" 0	- 85 53' 32" 0	37.758333	-85.892222
KY0045390	Airview WWTF	+ 37 45' 30" 0	- 85 53' 32" 0	37.758333	-85.892222
KY0045390	Airview WWTF	+ 37 45' 30" 0	- 85 53' 32" 0	37.758333	-85.892222
KY0045390	Airview WWTF	+ 37 45' 30" 0	- 85 53' 32" 0	37.758333	-85.892222
KY0045390	Airview WWTF	+ 37 45' 30" 0	- 85 53' 32" 0	37.758333	-85.892222
KY0045390	Airview WWTF	+ 37 45' 30" 0	- 85 53' 32" 0	37.758333	-85.892222
KY0045390	Airview WWTF	+ 37 45' 30" 0	- 85 53' 32" 0	37.758333	-85.892222
KY0045390	Airview WWTF	+ 37 45' 30" 0	- 85 53' 32" 0	37.758333	-85.892222
KY0045390	Airview WWTF	+ 37 45' 30" 0	- 85 53' 32" 0	37.758333	-85.892222
KY0045390	Airview WWTF	+ 37 45' 30" 0	- 85 53' 32" 0	37.758333	-85.892222
KY0045390	Airview WWTF	+ 37 45' 30" 0	- 85 53' 32" 0	37.758333	-85.892222
KY0045390	Airview WWTF	+ 37 45' 30" 0	- 85 53' 32" 0	37.758333	-85.892222
KY0045390	Airview WWTF	+ 37 45' 30" 0	- 85 53' 32" 0	37.758333	-85.892222
KY0045390	Airview WWTF	+ 37 45' 30" 0	- 85 53' 32" 0	37.758333	-85.892222
KY0045390	Airview WWTF	+ 37 45' 30" 0	- 85 53' 32" 0	37.758333	-85.892222
KY0045390	Airview WWTF	+ 37 45' 30" 0	- 85 53' 32" 0	37.758333	-85.892222
KY0045390	Airview WWTF	+ 37 45' 30" 0	- 85 53' 32" 0	37.758333	-85.892222
KY0045390	Airview WWTF	+ 37 45' 30" 0	- 85 53' 32" 0	37.758333	-85.892222
KY0045390	Airview WWTF	+ 37 45' 30" 0	- 85 53' 32" 0	37.758333	-85.892222
KY0045390	Airview WWTF	+ 37 45' 30" 0	- 85 53' 32" 0	37.758333	-85.892222
KY0045390	Airview WWTF	+ 37 45' 30" 0	- 85 53' 32" 0	37.758333	-85.892222
KY0045390	Airview WWTF	+ 37 45' 30" 0	- 85 53' 32" 0	37.758333	-85.892222
KY0045390	Airview WWTF	+ 37 45' 30" 0	- 85 53' 32" 0	37.758333	-85.892222
KY0045390	Airview WWTF	+ 37 45' 30" 0	- 85 53' 32" 0	37.758333	-85.892222
KY0045390	Airview WWTF	+ 37 45' 30" 0	- 85 53' 32" 0	37.758333	-85.892222
KY0045390	Airview WWTF	+ 37 45' 30" 0	- 85 53' 32" 0	37.758333	-85.892222
KY0045390	Airview WWTF	+ 37 45' 30" 0	- 85 53' 32" 0	37.758333	-85.892222
KY0045390	Airview WWTF	+ 37 45' 30" 0	- 85 53' 32" 0	37.758333	-85.892222
KY0045390	Airview WWTF	+ 37 45' 30" 0	- 85 53' 32" 0	37.758333	-85.892222
KY0045390	Airview WWTF	+ 37 45' 30" 0	- 85 53' 32" 0	37.758333	-85.892222
KY0045390	Airview WWTF	+ 37 45' 30" 0	- 85 53' 32" 0	37.758333	-85.892222
KY0045390	Airview WWTF	+ 37 45' 30" 0	- 85 53' 32" 0	37.758333	-85.892222
KY0045390	Airview WWTF	+ 37 45' 30" 0	- 85 53' 32" 0	37.758333	-85.892222
KY0045390	Airview WWTF	+ 37 45' 30" 0	- 85 53' 32" 0	37.758333	-85.892222
KY0045390	Airview WWTF	+ 37 45' 30" 0	- 85 53' 32" 0	37.758333	-85.892222
KY0045390	Airview WWTF	+ 37 45' 30" 0	- 85 53' 32" 0	37.758333	-85.892222
KY0045390	Airview WWTF	+ 37 45' 30" 0	- 85 53' 32" 0	37.758333	-85.892222
KY0045390	Airview WWTF	+ 37 45' 30" 0	- 85 53' 32" 0	37.758333	-85.892222
KY0045390	Airview WWTF	+ 37 45' 30" 0	- 85 53' 32" 0	37.758333	-85.892222
KY0045390	Airview WWTF	+ 37 45' 30" 0	- 85 53' 32" 0	37.758333	-85.892222
KY0045390	Airview WWTF	+ 37 45' 30" 0	- 85 53' 32" 0	37.758333	-85.892222
KY0045390	Airview WWTF	+ 37 45' 30" 0	- 85 53' 32" 0	37.758333	-85.892222
KY0045390	Airview WWTF	+ 37 45' 30" 0	- 85 53' 32" 0	37.758333	-85.892222

KY0045390	Airview WWTF	+ 37 45' 30" 0	- 85 53' 32" 0	37.758333	-85.892222
KY0045390	Airview WWTF	+ 37 45' 30" 0	- 85 53' 32" 0	37.758333	-85.892222
KY0045390	Airview WWTF	+ 37 45' 30" 0	- 85 53' 32" 0	37.758333	-85.892222
KY0045390	Airview WWTF	+ 37 45' 30" 0	- 85 53' 32" 0	37.758333	-85.892222
KY0045390	Airview WWTF	+ 37 45' 30" 0	- 85 53' 32" 0	37.758333	-85.892222
KY0045390	Airview WWTF	+ 37 45' 30" 0	- 85 53' 32" 0	37.758333	-85.892222
KY0045390	Airview WWTF	+ 37 45' 30" 0	- 85 53' 32" 0	37.758333	-85.892222
KY0045390	Airview WWTF	+ 37 45' 30" 0	- 85 53' 32" 0	37.758333	-85.892222
KY0045390	Airview WWTF	+ 37 45' 30" 0	- 85 53' 32" 0	37.758333	-85.892222
KY0045390	Airview WWTF	+ 37 45' 30" 0	- 85 53' 32" 0	37.758333	-85.892222
KY0045390	Airview WWTF	+ 37 45' 30" 0	- 85 53' 32" 0	37.758333	-85.892222
KY0045390	Airview WWTF	+ 37 45' 30" 0	- 85 53' 32" 0	37.758333	-85.892222
KY0045390	Airview WWTF	+ 37 45' 30" 0	- 85 53' 32" 0	37.758333	-85.892222
KY0045390	Airview WWTF	+ 37 45' 30" 0	- 85 53' 32" 0	37.758333	-85.892222
KY0045390	Airview WWTF	+ 37 45' 30" 0	- 85 53' 32" 0	37.758333	-85.892222
KY0045390	Airview WWTF	+ 37 45' 30" 0	- 85 53' 32" 0	37.758333	-85.892222
KY0045390	Airview WWTF	+ 37 45' 30" 0	- 85 53' 32" 0	37.758333	-85.892222
KY0045390	Airview WWTF	+ 37 45' 30" 0	- 85 53' 32" 0	37.758333	-85.892222
KY0045390	Airview WWTF	+ 37 45' 30" 0	- 85 53' 32" 0	37.758333	-85.892222
KY0045390	Airview WWTF	+ 37 45' 30" 0	- 85 53' 32" 0	37.758333	-85.892222
KY0045390	Airview WWTF	+ 37 45' 30" 0	- 85 53' 32" 0	37.758333	-85.892222
KY0045390	Airview WWTF	+ 37 45' 30" 0	- 85 53' 32" 0	37.758333	-85.892222
KY0045390	Airview WWTF	+ 37 45' 30" 0	- 85 53' 32" 0	37.758333	-85.892222
KY0045390	Airview WWTF	+ 37 45' 30" 0	- 85 53' 32" 0	37.758333	-85.892222
KY0045390	Airview WWTF	+ 37 45' 30" 0	- 85 53' 32" 0	37.758333	-85.892222
KY0045390	Airview WWTF	+ 37 45' 30" 0	- 85 53' 32" 0	37.758333	-85.892222
KY0045390	Airview WWTF	+ 37 45' 30" 0	- 85 53' 32" 0	37.758333	-85.892222
KY0045390	Airview WWTF	+ 37 45' 30" 0	- 85 53' 32" 0	37.758333	-85.892222
KY0045390	Airview WWTF	+ 37 45' 30" 0	- 85 53' 32" 0	37.758333	-85.892222
KY0045390	Airview WWTF	+ 37 45' 30" 0	- 85 53' 32" 0	37.758333	-85.892222
KY0045390	Airview WWTF	+ 37 45' 30" 0	- 85 53' 32" 0	37.758333	-85.892222
KY0045390	Airview WWTF	+ 37 45' 30" 0	- 85 53' 32" 0	37.758333	-85.892222
KY0045390	Airview WWTF	+ 37 45' 30" 0	- 85 53' 32" 0	37.758333	-85.892222
KY0045390	Airview WWTF	+ 37 45' 30" 0	- 85 53' 32" 0	37.758333	-85.892222
KY0045390	Airview WWTF	+ 37 45' 30" 0	- 85 53' 32" 0	37.758333	-85.892222
KY0045390	Airview WWTF	+ 37 45' 30" 0	- 85 53' 32" 0	37.758333	-85.892222
KY0045390	Airview WWTF	+ 37 45' 30" 0	- 85 53' 32" 0	37.758333	-85.892222
KY0045390	Airview WWTF	+ 37 45' 30" 0	- 85 53' 32" 0	37.758333	-85.892222
KY0045390	Airview WWTF	+ 37 45' 30" 0	- 85 53' 32" 0	37.758333	-85.892222
KY0045390	Airview WWTF	+ 37 45' 30" 0	- 85 53' 32" 0	37.758333	-85.892222
KY0045390	Airview WWTF	+ 37 45' 30" 0	- 85 53' 32" 0	37.758333	-85.892222
KY0045390	Airview WWTF	+ 37 45' 30" 0	- 85 53' 32" 0	37.758333	-85.892222
KY0045390	Airview WWTF	+ 37 45' 30" 0	- 85 53' 32" 0	37.758333	-85.892222
KY0045390	Airview WWTF	+ 37 45' 30" 0	- 85 53' 32" 0	37.758333	-85.892222
KY0045390	Airview WWTF	+ 37 45' 30" 0	- 85 53' 32" 0	37.758333	-85.892222
KY0045390	Airview WWTF	+ 37 45' 30" 0	- 85 53' 32" 0	37.758333	-85.892222
KY0045390	Airview WWTF	+ 37 45' 30" 0	- 85 53' 32" 0	37.758333	-85.892222
KY0045390	Airview WWTF	+ 37 45' 30" 0	- 85 53' 32" 0	37.758333	-85.892222
KY0045390	Airview WWTF	+ 37 45' 30" 0	- 85 53' 32" 0	37.758333	-85.892222
KY0045390	Airview WWTF	+ 37 45' 30" 0	- 85 53' 32" 0	37.758333	-85.892222
KY0045390	Airview WWTF	+ 37 45' 30" 0	- 85 53' 32" 0	37.758333	-85.892222

KY0045390	Airview WWTF	+ 37 45' 30" 0	- 85 53' 32" 0	37.758333	-85.892222
KY0045390	Airview WWTF	+ 37 45' 30" 0	- 85 53' 32" 0	37.758333	-85.892222
KY0045390	Airview WWTF	+ 37 45' 30" 0	- 85 53' 32" 0	37.758333	-85.892222
KY0045390	Airview WWTF	+ 37 45' 30" 0	- 85 53' 32" 0	37.758333	-85.892222
KY0045390	Airview WWTF	+ 37 45' 30" 0	- 85 53' 32" 0	37.758333	-85.892222
KY0045390	Airview WWTF	+ 37 45' 30" 0	- 85 53' 32" 0	37.758333	-85.892222
KY0045390	Airview WWTF	+ 37 45' 30" 0	- 85 53' 32" 0	37.758333	-85.892222
KY0045390	Airview WWTF	+ 37 45' 30" 0	- 85 53' 32" 0	37.758333	-85.892222
KY0045390	Airview WWTF	+ 37 45' 30" 0	- 85 53' 32" 0	37.758333	-85.892222
KY0045390	Airview WWTF	+ 37 45' 30" 0	- 85 53' 32" 0	37.758333	-85.892222
KY0045390	Airview WWTF	+ 37 45' 30" 0	- 85 53' 32" 0	37.758333	-85.892222
KY0045390	Airview WWTF	+ 37 45' 30" 0	- 85 53' 32" 0	37.758333	-85.892222
KY0045390	Airview WWTF	+ 37 45' 30" 0	- 85 53' 32" 0	37.758333	-85.892222
KY0045390	Airview WWTF	+ 37 45' 30" 0	- 85 53' 32" 0	37.758333	-85.892222
KY0045390	Airview WWTF	+ 37 45' 30" 0	- 85 53' 32" 0	37.758333	-85.892222
KY0045390	Airview WWTF	+ 37 45' 30" 0	- 85 53' 32" 0	37.758333	-85.892222
KY0045390	Airview WWTF	+ 37 45' 30" 0	- 85 53' 32" 0	37.758333	-85.892222
KY0045390	Airview WWTF	+ 37 45' 30" 0	- 85 53' 32" 0	37.758333	-85.892222
KY0045390	Airview WWTF	+ 37 45' 30" 0	- 85 53' 32" 0	37.758333	-85.892222
KY0045390	Airview WWTF	+ 37 45' 30" 0	- 85 53' 32" 0	37.758333	-85.892222
KY0045390	Airview WWTF	+ 37 45' 30" 0	- 85 53' 32" 0	37.758333	-85.892222
KY0045390	Airview WWTF	+ 37 45' 30" 0	- 85 53' 32" 0	37.758333	-85.892222
KY0045390	Airview WWTF	+ 37 45' 30" 0	- 85 53' 32" 0	37.758333	-85.892222
KY0045390	Airview WWTF	+ 37 45' 30" 0	- 85 53' 32" 0	37.758333	-85.892222
KY0045390	Airview WWTF	+ 37 45' 30" 0	- 85 53' 32" 0	37.758333	-85.892222
KY0045390	Airview WWTF	+ 37 45' 30" 0	- 85 53' 32" 0	37.758333	-85.892222
KY0045390	Airview WWTF	+ 37 45' 30" 0	- 85 53' 32" 0	37.758333	-85.892222
KY0045390	Airview WWTF	+ 37 45' 30" 0	- 85 53' 32" 0	37.758333	-85.892222
KY0045390	Airview WWTF	+ 37 45' 30" 0	- 85 53' 32" 0	37.758333	-85.892222
KY0045390	Airview WWTF	+ 37 45' 30" 0	- 85 53' 32" 0	37.758333	-85.892222
KY0045390	Airview WWTF	+ 37 45' 30" 0	- 85 53' 32" 0	37.758333	-85.892222
KY0045390	Airview WWTF	+ 37 45' 30" 0	- 85 53' 32" 0	37.758333	-85.892222
KY0045390	Airview WWTF	+ 37 45' 30" 0	- 85 53' 32" 0	37.758333	-85.892222
KY0045390	Airview WWTF	+ 37 45' 30" 0	- 85 53' 32" 0	37.758333	-85.892222
KY0045390	Airview WWTF	+ 37 45' 30" 0	- 85 53' 32" 0	37.758333	-85.892222
KY0045390	Airview WWTF	+ 37 45' 30" 0	- 85 53' 32" 0	37.758333	-85.892222
KY0045390	Airview WWTF	+ 37 45' 30" 0	- 85 53' 32" 0	37.758333	-85.892222
KY0045390	Airview WWTF	+ 37 45' 30" 0	- 85 53' 32" 0	37.758333	-85.892222
KY0045390	Airview WWTF	+ 37 45' 30" 0	- 85 53' 32" 0	37.758333	-85.892222
KY0045390	Airview WWTF	+ 37 45' 30" 0	- 85 53' 32" 0	37.758333	-85.892222
KY0045390	Airview WWTF	+ 37 45' 30" 0	- 85 53' 32" 0	37.758333	-85.892222
KY0045390	Airview WWTF	+ 37 45' 30" 0	- 85 53' 32" 0	37.758333	-85.892222
KY0045390	Airview WWTF	+ 37 45' 30" 0	- 85 53' 32" 0	37.758333	-85.892222
KY0045390	Airview WWTF	+ 37 45' 30" 0	- 85 53' 32" 0	37.758333	-85.892222
KY0045390	Airview WWTF	+ 37 45' 30" 0	- 85 53' 32" 0	37.758333	-85.892222
KY0045390	Airview WWTF	+ 37 45' 30" 0	- 85 53' 32" 0	37.758333	-85.892222
KY0045390	Airview WWTF	+ 37 45' 30" 0	- 85 53' 32" 0	37.758333	-85.892222
KY0045390	Airview WWTF	+ 37 45' 30" 0	- 85 53' 32" 0	37.758333	-85.892222
KY0045390	Airview WWTF	+ 37 45' 30" 0	- 85 53' 32" 0	37.758333	-85.892222
KY0045390	Airview WWTF	+ 37 45' 30" 0	- 85 53' 32" 0	37.758333	-85.892222
KY0045390	Airview WWTF	+ 37 45' 30" 0	- 85 53' 32" 0	37.758333	-85.892222

KY0045390	Airview WWTF	+ 37 45' 30" 0	- 85 53' 32" 0	37.758333	-85.892222
KY0045390	Airview WWTF	+ 37 45' 30" 0	- 85 53' 32" 0	37.758333	-85.892222
KY0045390	Airview WWTF	+ 37 45' 30" 0	- 85 53' 32" 0	37.758333	-85.892222
KY0045390	Airview WWTF	+ 37 45' 30" 0	- 85 53' 32" 0	37.758333	-85.892222
KY0045390	Airview WWTF	+ 37 45' 30" 0	- 85 53' 32" 0	37.758333	-85.892222
KY0045390	Airview WWTF	+ 37 45' 30" 0	- 85 53' 32" 0	37.758333	-85.892222
KY0045390	Airview WWTF	+ 37 45' 30" 0	- 85 53' 32" 0	37.758333	-85.892222
KY0045390	Airview WWTF	+ 37 45' 30" 0	- 85 53' 32" 0	37.758333	-85.892222
KY0045390	Airview WWTF	+ 37 45' 30" 0	- 85 53' 32" 0	37.758333	-85.892222
KY0045390	Airview WWTF	+ 37 45' 30" 0	- 85 53' 32" 0	37.758333	-85.892222
KY0045390	Airview WWTF	+ 37 45' 30" 0	- 85 53' 32" 0	37.758333	-85.892222
KY0045390	Airview WWTF	+ 37 45' 30" 0	- 85 53' 32" 0	37.758333	-85.892222
KY0045390	Airview WWTF	+ 37 45' 30" 0	- 85 53' 32" 0	37.758333	-85.892222
KY0045390	Airview WWTF	+ 37 45' 30" 0	- 85 53' 32" 0	37.758333	-85.892222
KY0045390	Airview WWTF	+ 37 45' 30" 0	- 85 53' 32" 0	37.758333	-85.892222
KY0045390	Airview WWTF	+ 37 45' 30" 0	- 85 53' 32" 0	37.758333	-85.892222
KY0045390	Airview WWTF	+ 37 45' 30" 0	- 85 53' 32" 0	37.758333	-85.892222
KY0045390	Airview WWTF	+ 37 45' 30" 0	- 85 53' 32" 0	37.758333	-85.892222
KY0045390	Airview WWTF	+ 37 45' 30" 0	- 85 53' 32" 0	37.758333	-85.892222
KY0045390	Airview WWTF	+ 37 45' 30" 0	- 85 53' 32" 0	37.758333	-85.892222
KY0045390	Airview WWTF	+ 37 45' 30" 0	- 85 53' 32" 0	37.758333	-85.892222
KY0045390	Airview WWTF	+ 37 45' 30" 0	- 85 53' 32" 0	37.758333	-85.892222
KY0045390	Airview WWTF	+ 37 45' 30" 0	- 85 53' 32" 0	37.758333	-85.892222
KY0045390	Airview WWTF	+ 37 45' 30" 0	- 85 53' 32" 0	37.758333	-85.892222
KY0045390	Airview WWTF	+ 37 45' 30" 0	- 85 53' 32" 0	37.758333	-85.892222
KY0045390	Airview WWTF	+ 37 45' 30" 0	- 85 53' 32" 0	37.758333	-85.892222
KY0045390	Airview WWTF	+ 37 45' 30" 0	- 85 53' 32" 0	37.758333	-85.892222
KY0045390	Airview WWTF	+ 37 45' 30" 0	- 85 53' 32" 0	37.758333	-85.892222
KY0045390	Airview WWTF	+ 37 45' 30" 0	- 85 53' 32" 0	37.758333	-85.892222
KY0045390	Airview WWTF	+ 37 45' 30" 0	- 85 53' 32" 0	37.758333	-85.892222
KY0045390	Airview WWTF	+ 37 45' 30" 0	- 85 53' 32" 0	37.758333	-85.892222
KY0045390	Airview WWTF	+ 37 45' 30" 0	- 85 53' 32" 0	37.758333	-85.892222
KY0045390	Airview WWTF	+ 37 45' 30" 0	- 85 53' 32" 0	37.758333	-85.892222
KY0045390	Airview WWTF	+ 37 45' 30" 0	- 85 53' 32" 0	37.758333	-85.892222
KY0045390	Airview WWTF	+ 37 45' 30" 0	- 85 53' 32" 0	37.758333	-85.892222
KY0045390	Airview WWTF	+ 37 45' 30" 0	- 85 53' 32" 0	37.758333	-85.892222
KY0045390	Airview WWTF	+ 37 45' 30" 0	- 85 53' 32" 0	37.758333	-85.892222
KY0045390	Airview WWTF	+ 37 45' 30" 0	- 85 53' 32" 0	37.758333	-85.892222
KY0045390	Airview WWTF	+ 37 45' 30" 0	- 85 53' 32" 0	37.758333	-85.892222
KY0045390	Airview WWTF	+ 37 45' 30" 0	- 85 53' 32" 0	37.758333	-85.892222
KY0045390	Airview WWTF	+ 37 45' 30" 0	- 85 53' 32" 0	37.758333	-85.892222
KY0045390	Airview WWTF	+ 37 45' 30" 0	- 85 53' 32" 0	37.758333	-85.892222
KY0045390	Airview WWTF	+ 37 45' 30" 0	- 85 53' 32" 0	37.758333	-85.892222
KY0045390	Airview WWTF	+ 37 45' 30" 0	- 85 53' 32" 0	37.758333	-85.892222
KY0045390	Airview WWTF	+ 37 45' 30" 0	- 85 53' 32" 0	37.758333	-85.892222
KY0045390	Airview WWTF	+ 37 45' 30" 0	- 85 53' 32" 0	37.758333	-85.892222
KY0045390	Airview WWTF	+ 37 45' 30" 0	- 85 53' 32" 0	37.758333	-85.892222
KY0045390	Airview WWTF	+ 37 45' 30" 0	- 85 53' 32" 0	37.758333	-85.892222
KY0045390	Airview WWTF	+ 37 45' 30" 0	- 85 53' 32" 0	37.758333	-85.892222
KY0045390	Airview WWTF	+ 37 45' 30" 0	- 85 53' 32" 0	37.758333	-85.892222
KY0045390	Airview WWTF	+ 37 45' 30" 0	- 85 53' 32" 0	37.758333	-85.892222

KY0045390	Airview WWTF	+ 37 45' 30" 0	- 85 53' 32" 0	37.758333	-85.892222
KY0045390	Airview WWTF	+ 37 45' 30" 0	- 85 53' 32" 0	37.758333	-85.892222
KY0045390	Airview WWTF	+ 37 45' 30" 0	- 85 53' 32" 0	37.758333	-85.892222
KY0045390	Airview WWTF	+ 37 45' 30" 0	- 85 53' 32" 0	37.758333	-85.892222
KY0045390	Airview WWTF	+ 37 45' 30" 0	- 85 53' 32" 0	37.758333	-85.892222
KY0045390	Airview WWTF	+ 37 45' 30" 0	- 85 53' 32" 0	37.758333	-85.892222
KY0045390	Airview WWTF	+ 37 45' 30" 0	- 85 53' 32" 0	37.758333	-85.892222
KY0045390	Airview WWTF	+ 37 45' 30" 0	- 85 53' 32" 0	37.758333	-85.892222
KY0045390	Airview WWTF	+ 37 45' 30" 0	- 85 53' 32" 0	37.758333	-85.892222
KY0045390	Airview WWTF	+ 37 45' 30" 0	- 85 53' 32" 0	37.758333	-85.892222
KY0045390	Airview WWTF	+ 37 45' 30" 0	- 85 53' 32" 0	37.758333	-85.892222
KY0045390	Airview WWTF	+ 37 45' 30" 0	- 85 53' 32" 0	37.758333	-85.892222
KY0045390	Airview WWTF	+ 37 45' 30" 0	- 85 53' 32" 0	37.758333	-85.892222
KY0045390	Airview WWTF	+ 37 45' 30" 0	- 85 53' 32" 0	37.758333	-85.892222
KY0045390	Airview WWTF	+ 37 45' 30" 0	- 85 53' 32" 0	37.758333	-85.892222
KY0045390	Airview WWTF	+ 37 45' 30" 0	- 85 53' 32" 0	37.758333	-85.892222
KY0045390	Airview WWTF	+ 37 45' 30" 0	- 85 53' 32" 0	37.758333	-85.892222
KY0045390	Airview WWTF	+ 37 45' 30" 0	- 85 53' 32" 0	37.758333	-85.892222
KY0045390	Airview WWTF	+ 37 45' 30" 0	- 85 53' 32" 0	37.758333	-85.892222
KY0045390	Airview WWTF	+ 37 45' 30" 0	- 85 53' 32" 0	37.758333	-85.892222
KY0045390	Airview WWTF	+ 37 45' 30" 0	- 85 53' 32" 0	37.758333	-85.892222
KY0045390	Airview WWTF	+ 37 45' 30" 0	- 85 53' 32" 0	37.758333	-85.892222
KY0045390	Airview WWTF	+ 37 45' 30" 0	- 85 53' 32" 0	37.758333	-85.892222
KY0045390	Airview WWTF	+ 37 45' 30" 0	- 85 53' 32" 0	37.758333	-85.892222
KY0045390	Airview WWTF	+ 37 45' 30" 0	- 85 53' 32" 0	37.758333	-85.892222
KY0045390	Airview WWTF	+ 37 45' 30" 0	- 85 53' 32" 0	37.758333	-85.892222
KY0045390	Airview WWTF	+ 37 45' 30" 0	- 85 53' 32" 0	37.758333	-85.892222
KY0045390	Airview WWTF	+ 37 45' 30" 0	- 85 53' 32" 0	37.758333	-85.892222
KY0045390	Airview WWTF	+ 37 45' 30" 0	- 85 53' 32" 0	37.758333	-85.892222
KY0045390	Airview WWTF	+ 37 45' 30" 0	- 85 53' 32" 0	37.758333	-85.892222
KY0045390	Airview WWTF	+ 37 45' 30" 0	- 85 53' 32" 0	37.758333	-85.892222
KY0045390	Airview WWTF	+ 37 45' 30" 0	- 85 53' 32" 0	37.758333	-85.892222
KY0045390	Airview WWTF	+ 37 45' 30" 0	- 85 53' 32" 0	37.758333	-85.892222
KY0045390	Airview WWTF	+ 37 45' 30" 0	- 85 53' 32" 0	37.758333	-85.892222
KY0045390	Airview WWTF	+ 37 45' 30" 0	- 85 53' 32" 0	37.758333	-85.892222
KY0045390	Airview WWTF	+ 37 45' 30" 0	- 85 53' 32" 0	37.758333	-85.892222
KY0045390	Airview WWTF	+ 37 45' 30" 0	- 85 53' 32" 0	37.758333	-85.892222
KY0045390	Airview WWTF	+ 37 45' 30" 0	- 85 53' 32" 0	37.758333	-85.892222
KY0045390	Airview WWTF	+ 37 45' 30" 0	- 85 53' 32" 0	37.758333	-85.892222
KY0045390	Airview WWTF	+ 37 45' 30" 0	- 85 53' 32" 0	37.758333	-85.892222
KY0045390	Airview WWTF	+ 37 45' 30" 0	- 85 53' 32" 0	37.758333	-85.892222
KY0045390	Airview WWTF	+ 37 45' 30" 0	- 85 53' 32" 0	37.758333	-85.892222
KY0045390	Airview WWTF	+ 37 45' 30" 0	- 85 53' 32" 0	37.758333	-85.892222
KY0045390	Airview WWTF	+ 37 45' 30" 0	- 85 53' 32" 0	37.758333	-85.892222
KY0045390	Airview WWTF	+ 37 45' 30" 0	- 85 53' 32" 0	37.758333	-85.892222
KY0045390	Airview WWTF	+ 37 45' 30" 0	- 85 53' 32" 0	37.758333	-85.892222
KY0045390	Airview WWTF	+ 37 45' 30" 0	- 85 53' 32" 0	37.758333	-85.892222
KY0045390	Airview WWTF	+ 37 45' 30" 0	- 85 53' 32" 0	37.758333	-85.892222
KY0045390	Airview WWTF	+ 37 45' 30" 0	- 85 53' 32" 0	37.758333	-85.892222
KY0045390	Airview WWTF	+ 37 45' 30" 0	- 85 53' 32" 0	37.758333	-85.892222
KY0045390	Airview WWTF	+ 37 45' 30" 0	- 85 53' 32" 0	37.758333	-85.892222

KY0045390	Airview WWTF	+ 37 45' 30" 0	- 85 53' 32" 0	37.758333	-85.892222
KY0045390	Airview WWTF	+ 37 45' 30" 0	- 85 53' 32" 0	37.758333	-85.892222
KY0045390	Airview WWTF	+ 37 45' 30" 0	- 85 53' 32" 0	37.758333	-85.892222
KY0045390	Airview WWTF	+ 37 45' 30" 0	- 85 53' 32" 0	37.758333	-85.892222
KY0045390	Airview WWTF	+ 37 45' 30" 0	- 85 53' 32" 0	37.758333	-85.892222
KY0045390	Airview WWTF	+ 37 45' 30" 0	- 85 53' 32" 0	37.758333	-85.892222
KY0045390	Airview WWTF	+ 37 45' 30" 0	- 85 53' 32" 0	37.758333	-85.892222
KY0045390	Airview WWTF	+ 37 45' 30" 0	- 85 53' 32" 0	37.758333	-85.892222
KY0045390	Airview WWTF	+ 37 45' 30" 0	- 85 53' 32" 0	37.758333	-85.892222
KY0045390	Airview WWTF	+ 37 45' 30" 0	- 85 53' 32" 0	37.758333	-85.892222
KY0045390	Airview WWTF	+ 37 45' 30" 0	- 85 53' 32" 0	37.758333	-85.892222
KY0045390	Airview WWTF	+ 37 45' 30" 0	- 85 53' 32" 0	37.758333	-85.892222
KY0045390	Airview WWTF	+ 37 45' 30" 0	- 85 53' 32" 0	37.758333	-85.892222
KY0045390	Airview WWTF	+ 37 45' 30" 0	- 85 53' 32" 0	37.758333	-85.892222
KY0045390	Airview WWTF	+ 37 45' 30" 0	- 85 53' 32" 0	37.758333	-85.892222
KY0045390	Airview WWTF	+ 37 45' 30" 0	- 85 53' 32" 0	37.758333	-85.892222
KY0045390	Airview WWTF	+ 37 45' 30" 0	- 85 53' 32" 0	37.758333	-85.892222
KY0045390	Airview WWTF	+ 37 45' 30" 0	- 85 53' 32" 0	37.758333	-85.892222
KY0045390	Airview WWTF	+ 37 45' 30" 0	- 85 53' 32" 0	37.758333	-85.892222
KY0045390	Airview WWTF	+ 37 45' 30" 0	- 85 53' 32" 0	37.758333	-85.892222
KY0045390	Airview WWTF	+ 37 45' 30" 0	- 85 53' 32" 0	37.758333	-85.892222
KY0045390	Airview WWTF	+ 37 45' 30" 0	- 85 53' 32" 0	37.758333	-85.892222
KY0045390	Airview WWTF	+ 37 45' 30" 0	- 85 53' 32" 0	37.758333	-85.892222
KY0045390	Airview WWTF	+ 37 45' 30" 0	- 85 53' 32" 0	37.758333	-85.892222
KY0045390	Airview WWTF	+ 37 45' 30" 0	- 85 53' 32" 0	37.758333	-85.892222
KY0045390	Airview WWTF	+ 37 45' 30" 0	- 85 53' 32" 0	37.758333	-85.892222
KY0045390	Airview WWTF	+ 37 45' 30" 0	- 85 53' 32" 0	37.758333	-85.892222
KY0045390	Airview WWTF	+ 37 45' 30" 0	- 85 53' 32" 0	37.758333	-85.892222
KY0045390	Airview WWTF	+ 37 45' 30" 0	- 85 53' 32" 0	37.758333	-85.892222
KY0045390	Airview WWTF	+ 37 45' 30" 0	- 85 53' 32" 0	37.758333	-85.892222
KY0045390	Airview WWTF	+ 37 45' 30" 0	- 85 53' 32" 0	37.758333	-85.892222
KY0045390	Airview WWTF	+ 37 45' 30" 0	- 85 53' 32" 0	37.758333	-85.892222
KY0045390	Airview WWTF	+ 37 45' 30" 0	- 85 53' 32" 0	37.758333	-85.892222
KY0045390	Airview WWTF	+ 37 45' 30" 0	- 85 53' 32" 0	37.758333	-85.892222
KY0045390	Airview WWTF	+ 37 45' 30" 0	- 85 53' 32" 0	37.758333	-85.892222
KY0045390	Airview WWTF	+ 37 45' 30" 0	- 85 53' 32" 0	37.758333	-85.892222
KY0045390	Airview WWTF	+ 37 45' 30" 0	- 85 53' 32" 0	37.758333	-85.892222
KY0045390	Airview WWTF	+ 37 45' 30" 0	- 85 53' 32" 0	37.758333	-85.892222
KY0045390	Airview WWTF	+ 37 45' 30" 0	- 85 53' 32" 0	37.758333	-85.892222
KY0045390	Airview WWTF	+ 37 45' 30" 0	- 85 53' 32" 0	37.758333	-85.892222
KY0045390	Airview WWTF	+ 37 45' 30" 0	- 85 53' 32" 0	37.758333	-85.892222
KY0045390	Airview WWTF	+ 37 45' 30" 0	- 85 53' 32" 0	37.758333	-85.892222
KY0045390	Airview WWTF	+ 37 45' 30" 0	- 85 53' 32" 0	37.758333	-85.892222
KY0045390	Airview WWTF	+ 37 45' 30" 0	- 85 53' 32" 0	37.758333	-85.892222
KY0045390	Airview WWTF	+ 37 45' 30" 0	- 85 53' 32" 0	37.758333	-85.892222
KY0045390	Airview WWTF	+ 37 45' 30" 0	- 85 53' 32" 0	37.758333	-85.892222
KY0045390	Airview WWTF	+ 37 45' 30" 0	- 85 53' 32" 0	37.758333	-85.892222
KY0045390	Airview WWTF	+ 37 45' 30" 0	- 85 53' 32" 0	37.758333	-85.892222
KY0045390	Airview WWTF	+ 37 45' 30" 0	- 85 53' 32" 0	37.758333	-85.892222
KY0045390	Airview WWTF	+ 37 45' 30" 0	- 85 53' 32" 0	37.758333	-85.892222
KY0045390	Airview WWTF	+ 37 45' 30" 0	- 85 53' 32" 0	37.758333	-85.892222

KY0045390	Airview WWTF	+ 37 45' 30" 0	- 85 53' 32" 0	37.758333	-85.892222
KY0045390	Airview WWTF	+ 37 45' 30" 0	- 85 53' 32" 0	37.758333	-85.892222
KY0045390	Airview WWTF	+ 37 45' 30" 0	- 85 53' 32" 0	37.758333	-85.892222
KY0045390	Airview WWTF	+ 37 45' 30" 0	- 85 53' 32" 0	37.758333	-85.892222
KY0045390	Airview WWTF	+ 37 45' 30" 0	- 85 53' 32" 0	37.758333	-85.892222
KY0045390	Airview WWTF	+ 37 45' 30" 0	- 85 53' 32" 0	37.758333	-85.892222
KY0045390	Airview WWTF	+ 37 45' 30" 0	- 85 53' 32" 0	37.758333	-85.892222
KY0045390	Airview WWTF	+ 37 45' 30" 0	- 85 53' 32" 0	37.758333	-85.892222
KY0045390	Airview WWTF	+ 37 45' 30" 0	- 85 53' 32" 0	37.758333	-85.892222
KY0045390	Airview WWTF	+ 37 45' 30" 0	- 85 53' 32" 0	37.758333	-85.892222
KY0045390	Airview WWTF	+ 37 45' 30" 0	- 85 53' 32" 0	37.758333	-85.892222
KY0045390	Airview WWTF	+ 37 45' 30" 0	- 85 53' 32" 0	37.758333	-85.892222
KY0045390	Airview WWTF	+ 37 45' 30" 0	- 85 53' 32" 0	37.758333	-85.892222
KY0045390	Airview WWTF	+ 37 45' 30" 0	- 85 53' 32" 0	37.758333	-85.892222
KY0045390	Airview WWTF	+ 37 45' 30" 0	- 85 53' 32" 0	37.758333	-85.892222
KY0045390	Airview WWTF	+ 37 45' 30" 0	- 85 53' 32" 0	37.758333	-85.892222
KY0045390	Airview WWTF	+ 37 45' 30" 0	- 85 53' 32" 0	37.758333	-85.892222
KY0045390	Airview WWTF	+ 37 45' 30" 0	- 85 53' 32" 0	37.758333	-85.892222
KY0045390	Airview WWTF	+ 37 45' 30" 0	- 85 53' 32" 0	37.758333	-85.892222
KY0045390	Airview WWTF	+ 37 45' 30" 0	- 85 53' 32" 0	37.758333	-85.892222
KY0045390	Airview WWTF	+ 37 45' 30" 0	- 85 53' 32" 0	37.758333	-85.892222
KY0045390	Airview WWTF	+ 37 45' 30" 0	- 85 53' 32" 0	37.758333	-85.892222
KY0045390	Airview WWTF	+ 37 45' 30" 0	- 85 53' 32" 0	37.758333	-85.892222
KY0045390	Airview WWTF	+ 37 45' 30" 0	- 85 53' 32" 0	37.758333	-85.892222
KY0045390	Airview WWTF	+ 37 45' 30" 0	- 85 53' 32" 0	37.758333	-85.892222
KY0045390	Airview WWTF	+ 37 45' 30" 0	- 85 53' 32" 0	37.758333	-85.892222
KY0045390	Airview WWTF	+ 37 45' 30" 0	- 85 53' 32" 0	37.758333	-85.892222
KY0045390	Airview WWTF	+ 37 45' 30" 0	- 85 53' 32" 0	37.758333	-85.892222
KY0045390	Airview WWTF	+ 37 45' 30" 0	- 85 53' 32" 0	37.758333	-85.892222
KY0045390	Airview WWTF	+ 37 45' 30" 0	- 85 53' 32" 0	37.758333	-85.892222
KY0045390	Airview WWTF	+ 37 45' 30" 0	- 85 53' 32" 0	37.758333	-85.892222
KY0045390	Airview WWTF	+ 37 45' 30" 0	- 85 53' 32" 0	37.758333	-85.892222
KY0045390	Airview WWTF	+ 37 45' 30" 0	- 85 53' 32" 0	37.758333	-85.892222
KY0045390	Airview WWTF	+ 37 45' 30" 0	- 85 53' 32" 0	37.758333	-85.892222
KY0045390	Airview WWTF	+ 37 45' 30" 0	- 85 53' 32" 0	37.758333	-85.892222
KY0045390	Airview WWTF	+ 37 45' 30" 0	- 85 53' 32" 0	37.758333	-85.892222
KY0045390	Airview WWTF	+ 37 45' 30" 0	- 85 53' 32" 0	37.758333	-85.892222
KY0045390	Airview WWTF	+ 37 45' 30" 0	- 85 53' 32" 0	37.758333	-85.892222
KY0045390	Airview WWTF	+ 37 45' 30" 0	- 85 53' 32" 0	37.758333	-85.892222
KY0045390	Airview WWTF	+ 37 45' 30" 0	- 85 53' 32" 0	37.758333	-85.892222
KY0045390	Airview WWTF	+ 37 45' 30" 0	- 85 53' 32" 0	37.758333	-85.892222
KY0045390	Airview WWTF	+ 37 45' 30" 0	- 85 53' 32" 0	37.758333	-85.892222
KY0045390	Airview WWTF	+ 37 45' 30" 0	- 85 53' 32" 0	37.758333	-85.892222
KY0045390	Airview WWTF	+ 37 45' 30" 0	- 85 53' 32" 0	37.758333	-85.892222
KY0045390	Airview WWTF	+ 37 45' 30" 0	- 85 53' 32" 0	37.758333	-85.892222
KY0045390	Airview WWTF	+ 37 45' 30" 0	- 85 53' 32" 0	37.758333	-85.892222
KY0045390	Airview WWTF	+ 37 45' 30" 0	- 85 53' 32" 0	37.758333	-85.892222
KY0045390	Airview WWTF	+ 37 45' 30" 0	- 85 53' 32" 0	37.758333	-85.892222
KY0045390	Airview WWTF	+ 37 45' 30" 0	- 85 53' 32" 0	37.758333	-85.892222
KY0045390	Airview WWTF	+ 37 45' 30" 0	- 85 53' 32" 0	37.758333	-85.892222
KY0045390	Airview WWTF	+ 37 45' 30" 0	- 85 53' 32" 0	37.758333	-85.892222

KY0045390	Airview WWTF	+ 37 45' 30" 0	- 85 53' 32" 0	37.758333	-85.892222
KY0045390	Airview WWTF	+ 37 45' 30" 0	- 85 53' 32" 0	37.758333	-85.892222
KY0045390	Airview WWTF	+ 37 45' 30" 0	- 85 53' 32" 0	37.758333	-85.892222
KY0045390	Airview WWTF	+ 37 45' 30" 0	- 85 53' 32" 0	37.758333	-85.892222
KY0045390	Airview WWTF	+ 37 45' 30" 0	- 85 53' 32" 0	37.758333	-85.892222

County Name	Facility UDF3	App. Design Flow (	mary Permit SIC Co	rr. Major Minor Stat	Limit Set Name
Hardin		0.055	6552	Minor	SANITARY WASTE
Hardin		0.055	6552	Minor	SANITARY WASTE
Hardin		0.055	6552	Minor	SANITARY WASTE
Hardin		0.055	6552	Minor	SANITARY WASTE
Hardin		0.055	6552	Minor	SANITARY WASTE
Hardin		0.055	6552	Minor	SANITARY WASTE
Hardin		0.055	6552	Minor	SANITARY WASTE
Hardin		0.055	6552	Minor	SANITARY WASTE
Hardin		0.055	6552	Minor	SANITARY WASTE
Hardin		0.055	6552	Minor	SANITARY WASTE
Hardin		0.055	6552	Minor	SANITARY WASTE
Hardin		0.055	6552	Minor	SANITARY WASTE
Hardin		0.055	6552	Minor	SANITARY WASTE
Hardin		0.055	6552	Minor	SANITARY WASTE
Hardin		0.055	6552	Minor	SANITARY WASTE
Hardin		0.055	6552	Minor	SANITARY WASTE
Hardin		0.055	6552	Minor	SANITARY WASTE
Hardin		0.055	6552	Minor	SANITARY WASTE
Hardin		0.055	6552	Minor	SANITARY WASTE
Hardin		0.055	6552	Minor	SANITARY WASTE
Hardin		0.055	6552	Minor	SANITARY WASTE
Hardin		0.055	6552	Minor	SANITARY WASTE
Hardin		0.055	6552	Minor	SANITARY WASTE
Hardin		0.055	6552	Minor	SANITARY WASTE
Hardin		0.055	6552	Minor	SANITARY WASTE
Hardin		0.055	6552	Minor	SANITARY WASTE
Hardin		0.055	6552	Minor	SANITARY WASTE
Hardin		0.055	6552	Minor	SANITARY WASTE
Hardin		0.055	6552	Minor	SANITARY WASTE
Hardin		0.055	6552	Minor	SANITARY WASTE
Hardin		0.055	6552	Minor	SANITARY WASTE
Hardin		0.055	6552	Minor	SANITARY WASTE
Hardin		0.055	6552	Minor	SANITARY WASTE
Hardin		0.055	6552	Minor	SANITARY WASTE
Hardin		0.055	6552	Minor	SANITARY WASTE
Hardin		0.055	6552	Minor	SANITARY WASTE
Hardin		0.055	6552	Minor	SANITARY WASTE
Hardin		0.055	6552	Minor	SANITARY WASTE
Hardin		0.055	6552	Minor	SANITARY WASTE
Hardin		0.055	6552	Minor	SANITARY WASTE
Hardin		0.055	6552	Minor	SANITARY WASTE
Hardin		0.055	6552	Minor	SANITARY WASTE
Hardin		0.055	6552	Minor	SANITARY WASTE
Hardin		0.055	6552	Minor	SANITARY WASTE
Hardin		0.055	6552	Minor	SANITARY WASTE
Hardin		0.055	6552	Minor	SANITARY WASTE
Hardin		0.055	6552	Minor	SANITARY WASTE
Hardin		0.055	6552	Minor	SANITARY WASTE
Hardin		0.055	6552	Minor	SANITARY WASTE
Hardin		0.055	6552	Minor	SANITARY WASTE

Hardin		0.055	6552	Minor	SANITARY WASTE
Hardin		0.055	6552	Minor	SANITARY WASTE
Hardin		0.055	6552	Minor	SANITARY WASTE
Hardin		0.055	6552	Minor	SANITARY WASTE
Hardin		0.055	6552	Minor	SANITARY WASTE
Hardin		0.055	6552	Minor	SANITARY WASTE
Hardin		0.055	6552	Minor	SANITARY WASTE
Hardin		0.055	6552	Minor	SANITARY WASTE
Hardin		0.055	6552	Minor	SANITARY WASTE
Hardin		0.055	6552	Minor	SANITARY WASTE
Hardin		0.055	6552	Minor	SANITARY WASTE
Hardin		0.055	6552	Minor	SANITARY WASTE
Hardin		0.055	6552	Minor	SANITARY WASTE
Hardin		0.055	6552	Minor	SANITARY WASTE
Hardin		0.055	6552	Minor	SANITARY WASTE
Hardin		0.055	6552	Minor	SANITARY WASTE
Hardin		0.055	6552	Minor	SANITARY WASTE
Hardin		0.055	6552	Minor	SANITARY WASTE
Hardin		0.055	6552	Minor	SANITARY WASTE
Hardin		0.055	6552	Minor	SANITARY WASTE
Hardin		0.055	6552	Minor	SANITARY WASTE
Hardin		0.055	6552	Minor	SANITARY WASTE
Hardin		0.055	6552	Minor	SANITARY WASTE
Hardin		0.055	6552	Minor	SANITARY WASTE
Hardin		0.055	6552	Minor	SANITARY WASTE
Hardin		0.055	6552	Minor	SANITARY WASTE
Hardin		0.055	6552	Minor	SANITARY WASTE
Hardin		0.055	6552	Minor	SANITARY WASTE
Hardin		0.055	6552	Minor	SANITARY WASTE
Hardin		0.055	6552	Minor	SANITARY WASTE
Hardin		0.055	6552	Minor	SANITARY WASTE
Hardin		0.055	6552	Minor	SANITARY WASTE
Hardin		0.055	6552	Minor	SANITARY WASTE
Hardin		0.055	6552	Minor	SANITARY WASTE
Hardin		0.055	6552	Minor	SANITARY WASTE
Hardin		0.055	6552	Minor	SANITARY WASTE
Hardin		0.055	6552	Minor	SANITARY WASTE
Hardin		0.055	6552	Minor	SANITARY WASTE
Hardin		0.055	6552	Minor	SANITARY WASTE
Hardin		0.055	6552	Minor	SANITARY WASTE
Hardin		0.055	6552	Minor	SANITARY WASTE
Hardin		0.055	6552	Minor	SANITARY WASTE
Hardin		0.055	6552	Minor	SANITARY WASTE
Hardin		0.055	6552	Minor	SANITARY WASTE
Hardin		0.055	6552	Minor	SANITARY WASTE
Hardin		0.055	6552	Minor	SANITARY WASTE
Hardin		0.055	6552	Minor	SANITARY WASTE
Hardin		0.055	6552	Minor	SANITARY WASTE
Hardin		0.055	6552	Minor	SANITARY WASTE
Hardin		0.055	6552	Minor	SANITARY WASTE
Hardin		0.055	6552	Minor	SANITARY WASTE

Hardin		0.055	6552	Minor	SANITARY WASTE
Hardin		0.055	6552	Minor	SANITARY WASTE
Hardin		0.055	6552	Minor	SANITARY WASTE
Hardin		0.055	6552	Minor	SANITARY WASTE
Hardin		0.055	6552	Minor	SANITARY WASTE
Hardin		0.055	6552	Minor	SANITARY WASTE
Hardin		0.055	6552	Minor	SANITARY WASTE
Hardin		0.055	6552	Minor	SANITARY WASTE
Hardin		0.055	6552	Minor	SANITARY WASTE
Hardin		0.055	6552	Minor	SANITARY WASTE
Hardin		0.055	6552	Minor	SANITARY WASTE
Hardin		0.055	6552	Minor	SANITARY WASTE
Hardin		0.055	6552	Minor	SANITARY WASTE
Hardin		0.055	6552	Minor	SANITARY WASTE
Hardin		0.055	6552	Minor	SANITARY WASTE
Hardin		0.055	6552	Minor	SANITARY WASTE
Hardin		0.055	6552	Minor	SANITARY WASTE
Hardin		0.055	6552	Minor	SANITARY WASTE
Hardin		0.055	6552	Minor	SANITARY WASTE
Hardin		0.055	6552	Minor	SANITARY WASTE
Hardin		0.055	6552	Minor	SANITARY WASTE
Hardin		0.055	6552	Minor	SANITARY WASTE
Hardin		0.055	6552	Minor	SANITARY WASTE
Hardin		0.055	6552	Minor	SANITARY WASTE
Hardin		0.055	6552	Minor	SANITARY WASTE
Hardin		0.055	6552	Minor	SANITARY WASTE
Hardin		0.055	6552	Minor	SANITARY WASTE
Hardin		0.055	6552	Minor	SANITARY WASTE
Hardin		0.055	6552	Minor	SANITARY WASTE
Hardin		0.055	6552	Minor	SANITARY WASTE
Hardin		0.055	6552	Minor	SANITARY WASTE
Hardin		0.055	6552	Minor	SANITARY WASTE
Hardin		0.055	6552	Minor	SANITARY WASTE
Hardin		0.055	6552	Minor	SANITARY WASTE
Hardin		0.055	6552	Minor	SANITARY WASTE
Hardin		0.055	6552	Minor	SANITARY WASTE
Hardin		0.055	6552	Minor	SANITARY WASTE
Hardin		0.055	6552	Minor	SANITARY WASTE
Hardin		0.055	6552	Minor	SANITARY WASTE
Hardin		0.055	6552	Minor	SANITARY WASTE
Hardin		0.055	6552	Minor	SANITARY WASTE
Hardin		0.055	6552	Minor	SANITARY WASTE
Hardin		0.055	6552	Minor	SANITARY WASTE
Hardin		0.055	6552	Minor	SANITARY WASTE
Hardin		0.055	6552	Minor	SANITARY WASTE
Hardin		0.055	6552	Minor	SANITARY WASTE
Hardin		0.055	6552	Minor	SANITARY WASTE
Hardin		0.055	6552	Minor	SANITARY WASTE
Hardin		0.055	6552	Minor	SANITARY WASTE
Hardin		0.055	6552	Minor	SANITARY WASTE
Hardin		0.055	6552	Minor	SANITARY WASTE

Hardin		0.055	6552	Minor	SANITARY WASTE
Hardin		0.055	6552	Minor	SANITARY WASTE
Hardin		0.055	6552	Minor	SANITARY WASTE
Hardin		0.055	6552	Minor	SANITARY WASTE
Hardin		0.055	6552	Minor	SANITARY WASTE
Hardin		0.055	6552	Minor	SANITARY WASTE
Hardin		0.055	6552	Minor	SANITARY WASTE
Hardin		0.055	6552	Minor	SANITARY WASTE
Hardin		0.055	6552	Minor	SANITARY WASTE
Hardin		0.055	6552	Minor	SANITARY WASTE
Hardin		0.055	6552	Minor	SANITARY WASTE
Hardin		0.055	6552	Minor	SANITARY WASTE
Hardin		0.055	6552	Minor	SANITARY WASTE
Hardin		0.055	6552	Minor	SANITARY WASTE
Hardin		0.055	6552	Minor	SANITARY WASTE
Hardin		0.055	6552	Minor	SANITARY WASTE
Hardin		0.055	6552	Minor	SANITARY WASTE
Hardin		0.055	6552	Minor	SANITARY WASTE
Hardin		0.055	6552	Minor	SANITARY WASTE
Hardin		0.055	6552	Minor	SANITARY WASTE
Hardin		0.055	6552	Minor	SANITARY WASTE
Hardin		0.055	6552	Minor	SANITARY WASTE
Hardin		0.055	6552	Minor	SANITARY WASTE
Hardin		0.055	6552	Minor	SANITARY WASTE
Hardin		0.055	6552	Minor	SANITARY WASTE
Hardin		0.055	6552	Minor	SANITARY WASTE
Hardin		0.055	6552	Minor	SANITARY WASTE
Hardin		0.055	6552	Minor	SANITARY WASTE
Hardin		0.055	6552	Minor	SANITARY WASTE
Hardin		0.055	6552	Minor	SANITARY WASTE
Hardin		0.055	6552	Minor	SANITARY WASTE
Hardin		0.055	6552	Minor	SANITARY WASTE
Hardin		0.055	6552	Minor	SANITARY WASTE
Hardin		0.055	6552	Minor	SANITARY WASTE
Hardin		0.055	6552	Minor	SANITARY WASTE
Hardin		0.055	6552	Minor	SANITARY WASTE
Hardin		0.055	6552	Minor	SANITARY WASTE
Hardin		0.055	6552	Minor	SANITARY WASTE
Hardin		0.055	6552	Minor	SANITARY WASTE
Hardin		0.055	6552	Minor	SANITARY WASTE
Hardin		0.055	6552	Minor	SANITARY WASTE
Hardin		0.055	6552	Minor	SANITARY WASTE
Hardin		0.055	6552	Minor	SANITARY WASTE
Hardin		0.055	6552	Minor	SANITARY WASTE
Hardin		0.055	6552	Minor	SANITARY WASTE
Hardin		0.055	6552	Minor	SANITARY WASTE
Hardin		0.055	6552	Minor	SANITARY WASTE
Hardin		0.055	6552	Minor	SANITARY WASTE
Hardin		0.055	6552	Minor	SANITARY WASTE
Hardin		0.055	6552	Minor	SANITARY WASTE
Hardin		0.055	6552	Minor	SANITARY WASTE

Hardin		0.055	6552	Minor	SANITARY WASTE
Hardin		0.055	6552	Minor	SANITARY WASTE
Hardin		0.055	6552	Minor	SANITARY WASTE
Hardin		0.055	6552	Minor	SANITARY WASTE
Hardin		0.055	6552	Minor	SANITARY WASTE
Hardin		0.055	6552	Minor	SANITARY WASTE
Hardin		0.055	6552	Minor	SANITARY WASTE
Hardin		0.055	6552	Minor	SANITARY WASTE
Hardin		0.055	6552	Minor	SANITARY WASTE
Hardin		0.055	6552	Minor	SANITARY WASTE
Hardin		0.055	6552	Minor	SANITARY WASTE
Hardin		0.055	6552	Minor	SANITARY WASTE
Hardin		0.055	6552	Minor	SANITARY WASTE
Hardin		0.055	6552	Minor	SANITARY WASTE
Hardin		0.055	6552	Minor	SANITARY WASTE
Hardin		0.055	6552	Minor	SANITARY WASTE
Hardin		0.055	6552	Minor	SANITARY WASTE
Hardin		0.055	6552	Minor	SANITARY WASTE
Hardin		0.055	6552	Minor	SANITARY WASTE
Hardin		0.055	6552	Minor	SANITARY WASTE
Hardin		0.055	6552	Minor	SANITARY WASTE
Hardin		0.055	6552	Minor	SANITARY WASTE
Hardin		0.055	6552	Minor	SANITARY WASTE
Hardin		0.055	6552	Minor	SANITARY WASTE
Hardin		0.055	6552	Minor	SANITARY WASTE
Hardin		0.055	6552	Minor	SANITARY WASTE
Hardin		0.055	6552	Minor	SANITARY WASTE
Hardin		0.055	6552	Minor	SANITARY WASTE
Hardin		0.055	6552	Minor	SANITARY WASTE
Hardin		0.055	6552	Minor	SANITARY WASTE
Hardin		0.055	6552	Minor	SANITARY WASTE
Hardin		0.055	6552	Minor	SANITARY WASTE
Hardin		0.055	6552	Minor	SANITARY WASTE
Hardin		0.055	6552	Minor	SANITARY WASTE
Hardin		0.055	6552	Minor	SANITARY WASTE
Hardin		0.055	6552	Minor	SANITARY WASTE
Hardin		0.055	6552	Minor	SANITARY WASTE
Hardin		0.055	6552	Minor	SANITARY WASTE
Hardin		0.055	6552	Minor	SANITARY WASTE
Hardin		0.055	6552	Minor	SANITARY WASTE
Hardin		0.055	6552	Minor	SANITARY WASTE
Hardin		0.055	6552	Minor	SANITARY WASTE
Hardin		0.055	6552	Minor	SANITARY WASTE
Hardin		0.055	6552	Minor	SANITARY WASTE
Hardin		0.055	6552	Minor	SANITARY WASTE
Hardin		0.055	6552	Minor	SANITARY WASTE
Hardin		0.055	6552	Minor	SANITARY WASTE
Hardin		0.055	6552	Minor	SANITARY WASTE
Hardin		0.055	6552	Minor	SANITARY WASTE
Hardin		0.055	6552	Minor	SANITARY WASTE
Hardin		0.055	6552	Minor	SANITARY WASTE

Hardin		0.055	6552	Minor	SANITARY WASTE
Hardin		0.055	6552	Minor	SANITARY WASTE
Hardin		0.055	6552	Minor	SANITARY WASTE
Hardin		0.055	6552	Minor	SANITARY WASTE
Hardin		0.055	6552	Minor	SANITARY WASTE
Hardin		0.055	6552	Minor	SANITARY WASTE
Hardin		0.055	6552	Minor	SANITARY WASTE
Hardin		0.055	6552	Minor	SANITARY WASTE
Hardin		0.055	6552	Minor	SANITARY WASTE
Hardin		0.055	6552	Minor	SANITARY WASTE
Hardin		0.055	6552	Minor	SANITARY WASTE
Hardin		0.055	6552	Minor	SANITARY WASTE
Hardin		0.055	6552	Minor	SANITARY WASTE
Hardin		0.055	6552	Minor	SANITARY WASTE
Hardin		0.055	6552	Minor	SANITARY WASTE
Hardin		0.055	6552	Minor	SANITARY WASTE
Hardin		0.055	6552	Minor	SANITARY WASTE
Hardin		0.055	6552	Minor	SANITARY WASTE
Hardin		0.055	6552	Minor	SANITARY WASTE
Hardin		0.055	6552	Minor	SANITARY WASTE
Hardin		0.055	6552	Minor	SANITARY WASTE
Hardin		0.055	6552	Minor	SANITARY WASTE
Hardin		0.055	6552	Minor	SANITARY WASTE
Hardin		0.055	6552	Minor	SANITARY WASTE
Hardin		0.055	6552	Minor	SANITARY WASTE
Hardin		0.055	6552	Minor	SANITARY WASTE
Hardin		0.055	6552	Minor	SANITARY WASTE
Hardin		0.055	6552	Minor	SANITARY WASTE
Hardin		0.055	6552	Minor	SANITARY WASTE
Hardin		0.055	6552	Minor	SANITARY WASTE
Hardin		0.055	6552	Minor	SANITARY WASTE
Hardin		0.055	6552	Minor	SANITARY WASTE
Hardin		0.055	6552	Minor	SANITARY WASTE
Hardin		0.055	6552	Minor	SANITARY WASTE
Hardin		0.055	6552	Minor	SANITARY WASTE
Hardin		0.055	6552	Minor	SANITARY WASTE
Hardin		0.055	6552	Minor	SANITARY WASTE
Hardin		0.055	6552	Minor	SANITARY WASTE
Hardin		0.055	6552	Minor	SANITARY WASTE
Hardin		0.055	6552	Minor	SANITARY WASTE
Hardin		0.055	6552	Minor	SANITARY WASTE
Hardin		0.055	6552	Minor	SANITARY WASTE
Hardin		0.055	6552	Minor	SANITARY WASTE
Hardin		0.055	6552	Minor	SANITARY WASTE
Hardin		0.055	6552	Minor	SANITARY WASTE
Hardin		0.055	6552	Minor	SANITARY WASTE
Hardin		0.055	6552	Minor	SANITARY WASTE
Hardin		0.055	6552	Minor	SANITARY WASTE
Hardin		0.055	6552	Minor	SANITARY WASTE
Hardin		0.055	6552	Minor	SANITARY WASTE
Hardin		0.055	6552	Minor	SANITARY WASTE

Hardin		0.055	6552	Minor	SANITARY WASTE
Hardin		0.055	6552	Minor	SANITARY WASTE
Hardin		0.055	6552	Minor	SANITARY WASTE
Hardin		0.055	6552	Minor	SANITARY WASTE
Hardin		0.055	6552	Minor	SANITARY WASTE
Hardin		0.055	6552	Minor	SANITARY WASTE
Hardin		0.055	6552	Minor	SANITARY WASTE
Hardin		0.055	6552	Minor	SANITARY WASTE
Hardin		0.055	6552	Minor	SANITARY WASTE
Hardin		0.055	6552	Minor	SANITARY WASTE
Hardin		0.055	6552	Minor	SANITARY WASTE
Hardin		0.055	6552	Minor	SANITARY WASTE
Hardin		0.055	6552	Minor	SANITARY WASTE
Hardin		0.055	6552	Minor	SANITARY WASTE
Hardin		0.055	6552	Minor	SANITARY WASTE
Hardin		0.055	6552	Minor	SANITARY WASTE
Hardin		0.055	6552	Minor	SANITARY WASTE
Hardin		0.055	6552	Minor	SANITARY WASTE
Hardin		0.055	6552	Minor	SANITARY WASTE
Hardin		0.055	6552	Minor	SANITARY WASTE
Hardin		0.055	6552	Minor	SANITARY WASTE
Hardin		0.055	6552	Minor	SANITARY WASTE
Hardin		0.055	6552	Minor	SANITARY WASTE
Hardin		0.055	6552	Minor	SANITARY WASTE
Hardin		0.055	6552	Minor	SANITARY WASTE
Hardin		0.055	6552	Minor	SANITARY WASTE
Hardin		0.055	6552	Minor	SANITARY WASTE
Hardin		0.055	6552	Minor	SANITARY WASTE
Hardin		0.055	6552	Minor	SANITARY WASTE
Hardin		0.055	6552	Minor	SANITARY WASTE
Hardin		0.055	6552	Minor	SANITARY WASTE
Hardin		0.055	6552	Minor	SANITARY WASTE
Hardin		0.055	6552	Minor	SANITARY WASTE
Hardin		0.055	6552	Minor	SANITARY WASTE
Hardin		0.055	6552	Minor	SANITARY WASTE
Hardin		0.055	6552	Minor	SANITARY WASTE
Hardin		0.055	6552	Minor	SANITARY WASTE
Hardin		0.055	6552	Minor	SANITARY WASTE
Hardin		0.055	6552	Minor	SANITARY WASTE
Hardin		0.055	6552	Minor	SANITARY WASTE
Hardin		0.055	6552	Minor	SANITARY WASTE
Hardin		0.055	6552	Minor	SANITARY WASTE
Hardin		0.055	6552	Minor	SANITARY WASTE
Hardin		0.055	6552	Minor	SANITARY WASTE
Hardin		0.055	6552	Minor	SANITARY WASTE
Hardin		0.055	6552	Minor	SANITARY WASTE
Hardin		0.055	6552	Minor	SANITARY WASTE
Hardin		0.055	6552	Minor	SANITARY WASTE
Hardin		0.055	6552	Minor	SANITARY WASTE
Hardin		0.055	6552	Minor	SANITARY WASTE
Hardin		0.055	6552	Minor	SANITARY WASTE

Hardin		0.055	6552	Minor	SANITARY WASTE
Hardin		0.055	6552	Minor	SANITARY WASTE
Hardin		0.055	6552	Minor	SANITARY WASTE
Hardin		0.055	6552	Minor	SANITARY WASTE
Hardin		0.055	6552	Minor	SANITARY WASTE
Hardin		0.055	6552	Minor	SANITARY WASTE
Hardin		0.055	6552	Minor	SANITARY WASTE
Hardin		0.055	6552	Minor	SANITARY WASTE
Hardin		0.055	6552	Minor	SANITARY WASTE
Hardin		0.055	6552	Minor	SANITARY WASTE
Hardin		0.055	6552	Minor	SANITARY WASTE
Hardin		0.055	6552	Minor	SANITARY WASTE
Hardin		0.055	6552	Minor	SANITARY WASTE
Hardin		0.055	6552	Minor	SANITARY WASTE
Hardin		0.055	6552	Minor	SANITARY WASTE
Hardin		0.055	6552	Minor	SANITARY WASTE
Hardin		0.055	6552	Minor	SANITARY WASTE
Hardin		0.055	6552	Minor	SANITARY WASTE
Hardin		0.055	6552	Minor	SANITARY WASTE
Hardin		0.055	6552	Minor	SANITARY WASTE
Hardin		0.055	6552	Minor	SANITARY WASTE
Hardin		0.055	6552	Minor	SANITARY WASTE
Hardin		0.055	6552	Minor	SANITARY WASTE
Hardin		0.055	6552	Minor	SANITARY WASTE
Hardin		0.055	6552	Minor	SANITARY WASTE
Hardin		0.055	6552	Minor	SANITARY WASTE
Hardin		0.055	6552	Minor	SANITARY WASTE
Hardin		0.055	6552	Minor	SANITARY WASTE
Hardin		0.055	6552	Minor	SANITARY WASTE
Hardin		0.055	6552	Minor	SANITARY WASTE
Hardin		0.055	6552	Minor	SANITARY WASTE
Hardin		0.055	6552	Minor	SANITARY WASTE
Hardin		0.055	6552	Minor	SANITARY WASTE
Hardin		0.055	6552	Minor	SANITARY WASTE
Hardin		0.055	6552	Minor	SANITARY WASTE
Hardin		0.055	6552	Minor	SANITARY WASTE
Hardin		0.055	6552	Minor	SANITARY WASTE
Hardin		0.055	6552	Minor	SANITARY WASTE
Hardin		0.055	6552	Minor	SANITARY WASTE
Hardin		0.055	6552	Minor	SANITARY WASTE
Hardin		0.055	6552	Minor	SANITARY WASTE
Hardin		0.055	6552	Minor	SANITARY WASTE
Hardin		0.055	6552	Minor	SANITARY WASTE
Hardin		0.055	6552	Minor	SANITARY WASTE
Hardin		0.055	6552	Minor	SANITARY WASTE
Hardin		0.055	6552	Minor	SANITARY WASTE
Hardin		0.055	6552	Minor	SANITARY WASTE
Hardin		0.055	6552	Minor	SANITARY WASTE
Hardin		0.055	6552	Minor	SANITARY WASTE
Hardin		0.055	6552	Minor	SANITARY WASTE
Hardin		0.055	6552	Minor	SANITARY WASTE

Hardin		0.055	6552	Minor	SANITARY WASTE
Hardin		0.055	6552	Minor	SANITARY WASTE
Hardin		0.055	6552	Minor	SANITARY WASTE
Hardin		0.055	6552	Minor	SANITARY WASTE
Hardin		0.055	6552	Minor	SANITARY WASTE
Hardin		0.055	6552	Minor	SANITARY WASTE
Hardin		0.055	6552	Minor	SANITARY WASTE
Hardin		0.055	6552	Minor	SANITARY WASTE
Hardin		0.055	6552	Minor	SANITARY WASTE
Hardin		0.055	6552	Minor	SANITARY WASTE
Hardin		0.055	6552	Minor	SANITARY WASTE
Hardin		0.055	6552	Minor	SANITARY WASTE
Hardin		0.055	6552	Minor	SANITARY WASTE
Hardin		0.055	6552	Minor	SANITARY WASTE
Hardin		0.055	6552	Minor	SANITARY WASTE
Hardin		0.055	6552	Minor	SANITARY WASTE
Hardin		0.055	6552	Minor	SANITARY WASTE
Hardin		0.055	6552	Minor	SANITARY WASTE
Hardin		0.055	6552	Minor	SANITARY WASTE
Hardin		0.055	6552	Minor	SANITARY WASTE
Hardin		0.055	6552	Minor	SANITARY WASTE
Hardin		0.055	6552	Minor	SANITARY WASTE
Hardin		0.055	6552	Minor	SANITARY WASTE
Hardin		0.055	6552	Minor	SANITARY WASTE
Hardin		0.055	6552	Minor	SANITARY WASTE
Hardin		0.055	6552	Minor	SANITARY WASTE
Hardin		0.055	6552	Minor	SANITARY WASTE
Hardin		0.055	6552	Minor	SANITARY WASTE
Hardin		0.055	6552	Minor	SANITARY WASTE
Hardin		0.055	6552	Minor	SANITARY WASTE
Hardin		0.055	6552	Minor	SANITARY WASTE
Hardin		0.055	6552	Minor	SANITARY WASTE
Hardin		0.055	6552	Minor	SANITARY WASTE
Hardin		0.055	6552	Minor	SANITARY WASTE
Hardin		0.055	6552	Minor	SANITARY WASTE
Hardin		0.055	6552	Minor	SANITARY WASTE
Hardin		0.055	6552	Minor	SANITARY WASTE
Hardin		0.055	6552	Minor	SANITARY WASTE
Hardin		0.055	6552	Minor	SANITARY WASTE
Hardin		0.055	6552	Minor	SANITARY WASTE
Hardin		0.055	6552	Minor	SANITARY WASTE
Hardin		0.055	6552	Minor	SANITARY WASTE
Hardin		0.055	6552	Minor	SANITARY WASTE
Hardin		0.055	6552	Minor	SANITARY WASTE
Hardin		0.055	6552	Minor	SANITARY WASTE
Hardin		0.055	6552	Minor	SANITARY WASTE
Hardin		0.055	6552	Minor	SANITARY WASTE
Hardin		0.055	6552	Minor	SANITARY WASTE
Hardin		0.055	6552	Minor	SANITARY WASTE
Hardin		0.055	6552	Minor	SANITARY WASTE
Hardin		0.055	6552	Minor	SANITARY WASTE

Hardin		0.055	6552	Minor	SANITARY WASTE
Hardin		0.055	6552	Minor	SANITARY WASTE
Hardin		0.055	6552	Minor	SANITARY WASTE
Hardin		0.055	6552	Minor	SANITARY WASTE
Hardin		0.055	6552	Minor	SANITARY WASTE
Hardin		0.055	6552	Minor	SANITARY WASTE
Hardin		0.055	6552	Minor	SANITARY WASTE
Hardin		0.055	6552	Minor	SANITARY WASTE
Hardin		0.055	6552	Minor	SANITARY WASTE
Hardin		0.055	6552	Minor	SANITARY WASTE
Hardin		0.055	6552	Minor	SANITARY WASTE
Hardin		0.055	6552	Minor	SANITARY WASTE
Hardin		0.055	6552	Minor	SANITARY WASTE
Hardin		0.055	6552	Minor	SANITARY WASTE
Hardin		0.055	6552	Minor	SANITARY WASTE
Hardin		0.055	6552	Minor	SANITARY WASTE
Hardin		0.055	6552	Minor	SANITARY WASTE
Hardin		0.055	6552	Minor	SANITARY WASTE
Hardin		0.055	6552	Minor	SANITARY WASTE
Hardin		0.055	6552	Minor	SANITARY WASTE
Hardin		0.055	6552	Minor	SANITARY WASTE
Hardin		0.055	6552	Minor	SANITARY WASTE
Hardin		0.055	6552	Minor	SANITARY WASTE
Hardin		0.055	6552	Minor	SANITARY WASTE
Hardin		0.055	6552	Minor	SANITARY WASTE
Hardin		0.055	6552	Minor	SANITARY WASTE
Hardin		0.055	6552	Minor	SANITARY WASTE
Hardin		0.055	6552	Minor	SANITARY WASTE
Hardin		0.055	6552	Minor	SANITARY WASTE
Hardin		0.055	6552	Minor	SANITARY WASTE
Hardin		0.055	6552	Minor	SANITARY WASTE
Hardin		0.055	6552	Minor	SANITARY WASTE
Hardin		0.055	6552	Minor	SANITARY WASTE
Hardin		0.055	6552	Minor	SANITARY WASTE
Hardin		0.055	6552	Minor	SANITARY WASTE
Hardin		0.055	6552	Minor	SANITARY WASTE
Hardin		0.055	6552	Minor	SANITARY WASTE
Hardin		0.055	6552	Minor	SANITARY WASTE
Hardin		0.055	6552	Minor	SANITARY WASTE
Hardin		0.055	6552	Minor	SANITARY WASTE
Hardin		0.055	6552	Minor	SANITARY WASTE
Hardin		0.055	6552	Minor	SANITARY WASTE
Hardin		0.055	6552	Minor	SANITARY WASTE
Hardin		0.055	6552	Minor	SANITARY WASTE
Hardin		0.055	6552	Minor	SANITARY WASTE
Hardin		0.055	6552	Minor	SANITARY WASTE
Hardin		0.055	6552	Minor	SANITARY WASTE
Hardin		0.055	6552	Minor	SANITARY WASTE
Hardin		0.055	6552	Minor	SANITARY WASTE
Hardin		0.055	6552	Minor	SANITARY WASTE
Hardin		0.055	6552	Minor	SANITARY WASTE

Hardin		0.055	6552	Minor	SANITARY WASTE
Hardin		0.055	6552	Minor	SANITARY WASTE
Hardin		0.055	6552	Minor	SANITARY WASTE
Hardin		0.055	6552	Minor	SANITARY WASTE
Hardin		0.055	6552	Minor	SANITARY WASTE
Hardin		0.055	6552	Minor	SANITARY WASTE
Hardin		0.055	6552	Minor	SANITARY WASTE
Hardin		0.055	6552	Minor	SANITARY WASTE
Hardin		0.055	6552	Minor	SANITARY WASTE
Hardin		0.055	6552	Minor	SANITARY WASTE
Hardin		0.055	6552	Minor	SANITARY WASTE
Hardin		0.055	6552	Minor	SANITARY WASTE
Hardin		0.055	6552	Minor	SANITARY WASTE
Hardin		0.055	6552	Minor	SANITARY WASTE
Hardin		0.055	6552	Minor	SANITARY WASTE
Hardin		0.055	6552	Minor	SANITARY WASTE
Hardin		0.055	6552	Minor	SANITARY WASTE
Hardin		0.055	6552	Minor	SANITARY WASTE
Hardin		0.055	6552	Minor	SANITARY WASTE
Hardin		0.055	6552	Minor	SANITARY WASTE
Hardin		0.055	6552	Minor	SANITARY WASTE
Hardin		0.055	6552	Minor	SANITARY WASTE
Hardin		0.055	6552	Minor	SANITARY WASTE
Hardin		0.055	6552	Minor	SANITARY WASTE
Hardin		0.055	6552	Minor	SANITARY WASTE
Hardin		0.055	6552	Minor	SANITARY WASTE
Hardin		0.055	6552	Minor	SANITARY WASTE
Hardin		0.055	6552	Minor	SANITARY WASTE
Hardin		0.055	6552	Minor	SANITARY WASTE
Hardin		0.055	6552	Minor	SANITARY WASTE
Hardin		0.055	6552	Minor	SANITARY WASTE
Hardin		0.055	6552	Minor	SANITARY WASTE
Hardin		0.055	6552	Minor	SANITARY WASTE
Hardin		0.055	6552	Minor	SANITARY WASTE
Hardin		0.055	6552	Minor	SANITARY WASTE
Hardin		0.055	6552	Minor	SANITARY WASTE
Hardin		0.055	6552	Minor	SANITARY WASTE
Hardin		0.055	6552	Minor	SANITARY WASTE
Hardin		0.055	6552	Minor	SANITARY WASTE
Hardin		0.055	6552	Minor	SANITARY WASTE
Hardin		0.055	6552	Minor	SANITARY WASTE
Hardin		0.055	6552	Minor	SANITARY WASTE
Hardin		0.055	6552	Minor	SANITARY WASTE
Hardin		0.055	6552	Minor	SANITARY WASTE
Hardin		0.055	6552	Minor	SANITARY WASTE
Hardin		0.055	6552	Minor	SANITARY WASTE
Hardin		0.055	6552	Minor	SANITARY WASTE
Hardin		0.055	6552	Minor	SANITARY WASTE
Hardin		0.055	6552	Minor	SANITARY WASTE
Hardin		0.055	6552	Minor	SANITARY WASTE
Hardin		0.055	6552	Minor	SANITARY WASTE

Hardin		0.055	6552	Minor	SANITARY WASTE
Hardin		0.055	6552	Minor	SANITARY WASTE
Hardin		0.055	6552	Minor	SANITARY WASTE
Hardin		0.055	6552	Minor	SANITARY WASTE
Hardin		0.055	6552	Minor	SANITARY WASTE
Hardin		0.055	6552	Minor	SANITARY WASTE
Hardin		0.055	6552	Minor	SANITARY WASTE
Hardin		0.055	6552	Minor	SANITARY WASTE
Hardin		0.055	6552	Minor	SANITARY WASTE
Hardin		0.055	6552	Minor	SANITARY WASTE
Hardin		0.055	6552	Minor	SANITARY WASTE
Hardin		0.055	6552	Minor	SANITARY WASTE
Hardin		0.055	6552	Minor	SANITARY WASTE
Hardin		0.055	6552	Minor	SANITARY WASTE
Hardin		0.055	6552	Minor	SANITARY WASTE
Hardin		0.055	6552	Minor	SANITARY WASTE
Hardin		0.055	6552	Minor	SANITARY WASTE
Hardin		0.055	6552	Minor	SANITARY WASTE
Hardin		0.055	6552	Minor	SANITARY WASTE
Hardin		0.055	6552	Minor	SANITARY WASTE
Hardin		0.055	6552	Minor	SANITARY WASTE
Hardin		0.055	6552	Minor	SANITARY WASTE
Hardin		0.055	6552	Minor	SANITARY WASTE
Hardin		0.055	6552	Minor	SANITARY WASTE
Hardin		0.055	6552	Minor	SANITARY WASTE
Hardin		0.055	6552	Minor	SANITARY WASTE
Hardin		0.055	6552	Minor	SANITARY WASTE
Hardin		0.055	6552	Minor	SANITARY WASTE
Hardin		0.055	6552	Minor	SANITARY WASTE
Hardin		0.055	6552	Minor	SANITARY WASTE
Hardin		0.055	6552	Minor	SANITARY WASTE
Hardin		0.055	6552	Minor	SANITARY WASTE
Hardin		0.055	6552	Minor	SANITARY WASTE
Hardin		0.055	6552	Minor	SANITARY WASTE
Hardin		0.055	6552	Minor	SANITARY WASTE
Hardin		0.055	6552	Minor	SANITARY WASTE
Hardin		0.055	6552	Minor	SANITARY WASTE
Hardin		0.055	6552	Minor	SANITARY WASTE
Hardin		0.055	6552	Minor	SANITARY WASTE
Hardin		0.055	6552	Minor	SANITARY WASTE
Hardin		0.055	6552	Minor	SANITARY WASTE
Hardin		0.055	6552	Minor	SANITARY WASTE
Hardin		0.055	6552	Minor	SANITARY WASTE
Hardin		0.055	6552	Minor	SANITARY WASTE
Hardin		0.055	6552	Minor	SANITARY WASTE
Hardin		0.055	6552	Minor	SANITARY WASTE
Hardin		0.055	6552	Minor	SANITARY WASTE
Hardin		0.055	6552	Minor	SANITARY WASTE
Hardin		0.055	6552	Minor	SANITARY WASTE
Hardin		0.055	6552	Minor	SANITARY WASTE
Hardin		0.055	6552	Minor	SANITARY WASTE

Hardin		0.055	6552	Minor	SANITARY WASTE
Hardin		0.055	6552	Minor	SANITARY WASTE
Hardin		0.055	6552	Minor	SANITARY WASTE
Hardin		0.055	6552	Minor	SANITARY WASTE
Hardin		0.055	6552	Minor	SANITARY WASTE
Hardin		0.055	6552	Minor	SANITARY WASTE
Hardin		0.055	6552	Minor	SANITARY WASTE
Hardin		0.055	6552	Minor	SANITARY WASTE
Hardin		0.055	6552	Minor	SANITARY WASTE
Hardin		0.055	6552	Minor	SANITARY WASTE
Hardin		0.055	6552	Minor	SANITARY WASTE
Hardin		0.055	6552	Minor	SANITARY WASTE
Hardin		0.055	6552	Minor	SANITARY WASTE
Hardin		0.055	6552	Minor	SANITARY WASTE
Hardin		0.055	6552	Minor	SANITARY WASTE
Hardin		0.055	6552	Minor	SANITARY WASTE
Hardin		0.055	6552	Minor	SANITARY WASTE
Hardin		0.055	6552	Minor	SANITARY WASTE
Hardin		0.055	6552	Minor	SANITARY WASTE
Hardin		0.055	6552	Minor	SANITARY WASTE
Hardin		0.055	6552	Minor	SANITARY WASTE
Hardin		0.055	6552	Minor	SANITARY WASTE
Hardin		0.055	6552	Minor	SANITARY WASTE
Hardin		0.055	6552	Minor	SANITARY WASTE
Hardin		0.055	6552	Minor	SANITARY WASTE
Hardin		0.055	6552	Minor	SANITARY WASTE
Hardin		0.055	6552	Minor	SANITARY WASTE
Hardin		0.055	6552	Minor	SANITARY WASTE
Hardin		0.055	6552	Minor	SANITARY WASTE
Hardin		0.055	6552	Minor	SANITARY WASTE
Hardin		0.055	6552	Minor	SANITARY WASTE
Hardin		0.055	6552	Minor	SANITARY WASTE
Hardin		0.055	6552	Minor	SANITARY WASTE
Hardin		0.055	6552	Minor	SANITARY WASTE
Hardin		0.055	6552	Minor	SANITARY WASTE
Hardin		0.055	6552	Minor	SANITARY WASTE
Hardin		0.055	6552	Minor	SANITARY WASTE
Hardin		0.055	6552	Minor	SANITARY WASTE
Hardin		0.055	6552	Minor	SANITARY WASTE
Hardin		0.055	6552	Minor	SANITARY WASTE
Hardin		0.055	6552	Minor	SANITARY WASTE
Hardin		0.055	6552	Minor	SANITARY WASTE
Hardin		0.055	6552	Minor	SANITARY WASTE
Hardin		0.055	6552	Minor	SANITARY WASTE
Hardin		0.055	6552	Minor	SANITARY WASTE
Hardin		0.055	6552	Minor	SANITARY WASTE
Hardin		0.055	6552	Minor	SANITARY WASTE
Hardin		0.055	6552	Minor	SANITARY WASTE
Hardin		0.055	6552	Minor	SANITARY WASTE
Hardin		0.055	6552	Minor	SANITARY WASTE
Hardin		0.055	6552	Minor	SANITARY WASTE

Hardin		0.055	6552	Minor	SANITARY WASTE
Hardin		0.055	6552	Minor	SANITARY WASTE
Hardin		0.055	6552	Minor	SANITARY WASTE
Hardin		0.055	6552	Minor	SANITARY WASTE
Hardin		0.055	6552	Minor	SANITARY WASTE
Hardin		0.055	6552	Minor	SANITARY WASTE
Hardin		0.055	6552	Minor	SANITARY WASTE
Hardin		0.055	6552	Minor	SANITARY WASTE
Hardin		0.055	6552	Minor	SANITARY WASTE
Hardin		0.055	6552	Minor	SANITARY WASTE
Hardin		0.055	6552	Minor	SANITARY WASTE
Hardin		0.055	6552	Minor	SANITARY WASTE
Hardin		0.055	6552	Minor	SANITARY WASTE
Hardin		0.055	6552	Minor	SANITARY WASTE
Hardin		0.055	6552	Minor	SANITARY WASTE
Hardin		0.055	6552	Minor	SANITARY WASTE
Hardin		0.055	6552	Minor	SANITARY WASTE
Hardin		0.055	6552	Minor	SANITARY WASTE
Hardin		0.055	6552	Minor	SANITARY WASTE
Hardin		0.055	6552	Minor	SANITARY WASTE
Hardin		0.055	6552	Minor	SANITARY WASTE
Hardin		0.055	6552	Minor	SANITARY WASTE
Hardin		0.055	6552	Minor	SANITARY WASTE
Hardin		0.055	6552	Minor	SANITARY WASTE
Hardin		0.055	6552	Minor	SANITARY WASTE
Hardin		0.055	6552	Minor	SANITARY WASTE
Hardin		0.055	6552	Minor	SANITARY WASTE
Hardin		0.055	6552	Minor	SANITARY WASTE
Hardin		0.055	6552	Minor	SANITARY WASTE
Hardin		0.055	6552	Minor	SANITARY WASTE
Hardin		0.055	6552	Minor	SANITARY WASTE
Hardin		0.055	6552	Minor	SANITARY WASTE
Hardin		0.055	6552	Minor	SANITARY WASTE
Hardin		0.055	6552	Minor	SANITARY WASTE
Hardin		0.055	6552	Minor	SANITARY WASTE
Hardin		0.055	6552	Minor	SANITARY WASTE
Hardin		0.055	6552	Minor	SANITARY WASTE
Hardin		0.055	6552	Minor	SANITARY WASTE
Hardin		0.055	6552	Minor	SANITARY WASTE
Hardin		0.055	6552	Minor	SANITARY WASTE
Hardin		0.055	6552	Minor	SANITARY WASTE
Hardin		0.055	6552	Minor	SANITARY WASTE
Hardin		0.055	6552	Minor	SANITARY WASTE
Hardin		0.055	6552	Minor	SANITARY WASTE
Hardin		0.055	6552	Minor	SANITARY WASTE
Hardin		0.055	6552	Minor	SANITARY WASTE
Hardin		0.055	6552	Minor	SANITARY WASTE
Hardin		0.055	6552	Minor	SANITARY WASTE
Hardin		0.055	6552	Minor	SANITARY WASTE
Hardin		0.055	6552	Minor	SANITARY WASTE
Hardin		0.055	6552	Minor	SANITARY WASTE

Hardin		0.055	6552	Minor	SANITARY WASTE
Hardin		0.055	6552	Minor	SANITARY WASTE
Hardin		0.055	6552	Minor	SANITARY WASTE
Hardin		0.055	6552	Minor	SANITARY WASTE
Hardin		0.055	6552	Minor	SANITARY WASTE
Hardin		0.055	6552	Minor	SANITARY WASTE
Hardin		0.055	6552	Minor	SANITARY WASTE
Hardin		0.055	6552	Minor	SANITARY WASTE
Hardin		0.055	6552	Minor	SANITARY WASTE
Hardin		0.055	6552	Minor	SANITARY WASTE
Hardin		0.055	6552	Minor	SANITARY WASTE
Hardin		0.055	6552	Minor	SANITARY WASTE
Hardin		0.055	6552	Minor	SANITARY WASTE
Hardin		0.055	6552	Minor	SANITARY WASTE
Hardin		0.055	6552	Minor	SANITARY WASTE
Hardin		0.055	6552	Minor	SANITARY WASTE
Hardin		0.055	6552	Minor	SANITARY WASTE
Hardin		0.055	6552	Minor	SANITARY WASTE
Hardin		0.055	6552	Minor	SANITARY WASTE
Hardin		0.055	6552	Minor	SANITARY WASTE
Hardin		0.055	6552	Minor	SANITARY WASTE
Hardin		0.055	6552	Minor	SANITARY WASTE
Hardin		0.055	6552	Minor	SANITARY WASTE
Hardin		0.055	6552	Minor	SANITARY WASTE
Hardin		0.055	6552	Minor	SANITARY WASTE
Hardin		0.055	6552	Minor	SANITARY WASTE
Hardin		0.055	6552	Minor	SANITARY WASTE
Hardin		0.055	6552	Minor	SANITARY WASTE
Hardin		0.055	6552	Minor	SANITARY WASTE
Hardin		0.055	6552	Minor	SANITARY WASTE
Hardin		0.055	6552	Minor	SANITARY WASTE
Hardin		0.055	6552	Minor	SANITARY WASTE
Hardin		0.055	6552	Minor	SANITARY WASTE
Hardin		0.055	6552	Minor	SANITARY WASTE
Hardin		0.055	6552	Minor	SANITARY WASTE
Hardin		0.055	6552	Minor	SANITARY WASTE
Hardin		0.055	6552	Minor	SANITARY WASTE
Hardin		0.055	6552	Minor	SANITARY WASTE
Hardin		0.055	6552	Minor	SANITARY WASTE
Hardin		0.055	6552	Minor	SANITARY WASTE
Hardin		0.055	6552	Minor	SANITARY WASTE
Hardin		0.055	6552	Minor	SANITARY WASTE
Hardin		0.055	6552	Minor	SANITARY WASTE
Hardin		0.055	6552	Minor	SANITARY WASTE
Hardin		0.055	6552	Minor	SANITARY WASTE
Hardin		0.055	6552	Minor	SANITARY WASTE
Hardin		0.055	6552	Minor	SANITARY WASTE
Hardin		0.055	6552	Minor	SANITARY WASTE
Hardin		0.055	6552	Minor	SANITARY WASTE
Hardin		0.055	6552	Minor	SANITARY WASTE
Hardin		0.055	6552	Minor	SANITARY WASTE

Hardin		0.055	6552	Minor	SANITARY WASTE
Hardin		0.055	6552	Minor	SANITARY WASTE
Hardin		0.055	6552	Minor	SANITARY WASTE
Hardin		0.055	6552	Minor	SANITARY WASTE
Hardin		0.055	6552	Minor	SANITARY WASTE
Hardin		0.055	6552	Minor	SANITARY WASTE
Hardin		0.055	6552	Minor	SANITARY WASTE
Hardin		0.055	6552	Minor	SANITARY WASTE
Hardin		0.055	6552	Minor	SANITARY WASTE
Hardin		0.055	6552	Minor	SANITARY WASTE
Hardin		0.055	6552	Minor	SANITARY WASTE
Hardin		0.055	6552	Minor	SANITARY WASTE
Hardin		0.055	6552	Minor	SANITARY WASTE
Hardin		0.055	6552	Minor	SANITARY WASTE
Hardin		0.055	6552	Minor	SANITARY WASTE
Hardin		0.055	6552	Minor	SANITARY WASTE
Hardin		0.055	6552	Minor	SANITARY WASTE
Hardin		0.055	6552	Minor	SANITARY WASTE
Hardin		0.055	6552	Minor	SANITARY WASTE
Hardin		0.055	6552	Minor	SANITARY WASTE
Hardin		0.055	6552	Minor	SANITARY WASTE
Hardin		0.055	6552	Minor	SANITARY WASTE
Hardin		0.055	6552	Minor	SANITARY WASTE
Hardin		0.055	6552	Minor	SANITARY WASTE
Hardin		0.055	6552	Minor	SANITARY WASTE
Hardin		0.055	6552	Minor	SANITARY WASTE
Hardin		0.055	6552	Minor	SANITARY WASTE
Hardin		0.055	6552	Minor	SANITARY WASTE
Hardin		0.055	6552	Minor	SANITARY WASTE
Hardin		0.055	6552	Minor	SANITARY WASTE
Hardin		0.055	6552	Minor	SANITARY WASTE
Hardin		0.055	6552	Minor	SANITARY WASTE
Hardin		0.055	6552	Minor	SANITARY WASTE
Hardin		0.055	6552	Minor	SANITARY WASTE
Hardin		0.055	6552	Minor	SANITARY WASTE
Hardin		0.055	6552	Minor	SANITARY WASTE
Hardin		0.055	6552	Minor	SANITARY WASTE
Hardin		0.055	6552	Minor	SANITARY WASTE
Hardin		0.055	6552	Minor	SANITARY WASTE
Hardin		0.055	6552	Minor	SANITARY WASTE
Hardin		0.055	6552	Minor	SANITARY WASTE
Hardin		0.055	6552	Minor	SANITARY WASTE
Hardin		0.055	6552	Minor	SANITARY WASTE
Hardin		0.055	6552	Minor	SANITARY WASTE
Hardin		0.055	6552	Minor	SANITARY WASTE
Hardin		0.055	6552	Minor	SANITARY WASTE
Hardin		0.055	6552	Minor	SANITARY WASTE
Hardin		0.055	6552	Minor	SANITARY WASTE
Hardin		0.055	6552	Minor	SANITARY WASTE
Hardin		0.055	6552	Minor	SANITARY WASTE
Hardin		0.055	6552	Minor	SANITARY WASTE

Hardin		0.055	6552	Minor	SANITARY WASTE
Hardin		0.055	6552	Minor	SANITARY WASTE
Hardin		0.055	6552	Minor	SANITARY WASTE
Hardin		0.055	6552	Minor	SANITARY WASTE
Hardin		0.055	6552	Minor	SANITARY WASTE
Hardin		0.055	6552	Minor	SANITARY WASTE
Hardin		0.055	6552	Minor	SANITARY WASTE
Hardin		0.055	6552	Minor	SANITARY WASTE
Hardin		0.055	6552	Minor	SANITARY WASTE
Hardin		0.055	6552	Minor	SANITARY WASTE
Hardin		0.055	6552	Minor	SANITARY WASTE
Hardin		0.055	6552	Minor	SANITARY WASTE
Hardin		0.055	6552	Minor	SANITARY WASTE
Hardin		0.055	6552	Minor	SANITARY WASTE
Hardin		0.055	6552	Minor	SANITARY WASTE
Hardin		0.055	6552	Minor	SANITARY WASTE
Hardin		0.055	6552	Minor	SANITARY WASTE
Hardin		0.055	6552	Minor	SANITARY WASTE
Hardin		0.055	6552	Minor	SANITARY WASTE
Hardin		0.055	6552	Minor	SANITARY WASTE
Hardin		0.055	6552	Minor	SANITARY WASTE
Hardin		0.055	6552	Minor	SANITARY WASTE
Hardin		0.055	6552	Minor	SANITARY WASTE
Hardin		0.055	6552	Minor	SANITARY WASTE
Hardin		0.055	6552	Minor	SANITARY WASTE
Hardin		0.055	6552	Minor	SANITARY WASTE
Hardin		0.055	6552	Minor	SANITARY WASTE
Hardin		0.055	6552	Minor	SANITARY WASTE
Hardin		0.055	6552	Minor	SANITARY WASTE
Hardin		0.055	6552	Minor	SANITARY WASTE
Hardin		0.055	6552	Minor	SANITARY WASTE
Hardin		0.055	6552	Minor	SANITARY WASTE
Hardin		0.055	6552	Minor	SANITARY WASTE
Hardin		0.055	6552	Minor	SANITARY WASTE
Hardin		0.055	6552	Minor	SANITARY WASTE
Hardin		0.055	6552	Minor	SANITARY WASTE
Hardin		0.055	6552	Minor	SANITARY WASTE
Hardin		0.055	6552	Minor	SANITARY WASTE
Hardin		0.055	6552	Minor	SANITARY WASTE
Hardin		0.055	6552	Minor	SANITARY WASTE
Hardin		0.055	6552	Minor	SANITARY WASTE
Hardin		0.055	6552	Minor	SANITARY WASTE
Hardin		0.055	6552	Minor	SANITARY WASTE
Hardin		0.055	6552	Minor	SANITARY WASTE
Hardin		0.055	6552	Minor	SANITARY WASTE
Hardin		0.055	6552	Minor	SANITARY WASTE
Hardin		0.055	6552	Minor	SANITARY WASTE
Hardin		0.055	6552	Minor	SANITARY WASTE
Hardin		0.055	6552	Minor	SANITARY WASTE
Hardin		0.055	6552	Minor	SANITARY WASTE
Hardin		0.055	6552	Minor	SANITARY WASTE

Hardin		0.055	6552	Minor	SANITARY WASTE
Hardin		0.055	6552	Minor	SANITARY WASTE
Hardin		0.055	6552	Minor	SANITARY WASTE
Hardin		0.055	6552	Minor	SANITARY WASTE
Hardin		0.055	6552	Minor	SANITARY WASTE
Hardin		0.055	6552	Minor	SANITARY WASTE
Hardin		0.055	6552	Minor	SANITARY WASTE
Hardin		0.055	6552	Minor	SANITARY WASTE
Hardin		0.055	6552	Minor	SANITARY WASTE
Hardin		0.055	6552	Minor	SANITARY WASTE
Hardin		0.055	6552	Minor	SANITARY WASTE
Hardin		0.055	6552	Minor	SANITARY WASTE
Hardin		0.055	6552	Minor	SANITARY WASTE
Hardin		0.055	6552	Minor	SANITARY WASTE
Hardin		0.055	6552	Minor	SANITARY WASTE
Hardin		0.055	6552	Minor	SANITARY WASTE
Hardin		0.055	6552	Minor	SANITARY WASTE
Hardin		0.055	6552	Minor	SANITARY WASTE
Hardin		0.055	6552	Minor	SANITARY WASTE
Hardin		0.055	6552	Minor	SANITARY WASTE
Hardin		0.055	6552	Minor	SANITARY WASTE
Hardin		0.055	6552	Minor	SANITARY WASTE
Hardin		0.055	6552	Minor	SANITARY WASTE
Hardin		0.055	6552	Minor	SANITARY WASTE
Hardin		0.055	6552	Minor	SANITARY WASTE
Hardin		0.055	6552	Minor	SANITARY WASTE
Hardin		0.055	6552	Minor	SANITARY WASTE
Hardin		0.055	6552	Minor	SANITARY WASTE
Hardin		0.055	6552	Minor	SANITARY WASTE
Hardin		0.055	6552	Minor	SANITARY WASTE
Hardin		0.055	6552	Minor	SANITARY WASTE
Hardin		0.055	6552	Minor	SANITARY WASTE
Hardin		0.055	6552	Minor	SANITARY WASTE
Hardin		0.055	6552	Minor	SANITARY WASTE
Hardin		0.055	6552	Minor	SANITARY WASTE
Hardin		0.055	6552	Minor	SANITARY WASTE
Hardin		0.055	6552	Minor	SANITARY WASTE
Hardin		0.055	6552	Minor	SANITARY WASTE
Hardin		0.055	6552	Minor	SANITARY WASTE
Hardin		0.055	6552	Minor	SANITARY WASTE
Hardin		0.055	6552	Minor	SANITARY WASTE
Hardin		0.055	6552	Minor	SANITARY WASTE
Hardin		0.055	6552	Minor	SANITARY WASTE
Hardin		0.055	6552	Minor	SANITARY WASTE
Hardin		0.055	6552	Minor	SANITARY WASTE
Hardin		0.055	6552	Minor	SANITARY WASTE
Hardin		0.055	6552	Minor	SANITARY WASTE
Hardin		0.055	6552	Minor	SANITARY WASTE
Hardin		0.055	6552	Minor	SANITARY WASTE
Hardin		0.055	6552	Minor	SANITARY WASTE
Hardin		0.055	6552	Minor	SANITARY WASTE

Hardin		0.055	6552	Minor	SANITARY WASTE
Hardin		0.055	6552	Minor	SANITARY WASTE
Hardin		0.055	6552	Minor	SANITARY WASTE
Hardin		0.055	6552	Minor	SANITARY WASTE
Hardin		0.055	6552	Minor	SANITARY WASTE
Hardin		0.055	6552	Minor	SANITARY WASTE
Hardin		0.055	6552	Minor	SANITARY WASTE
Hardin		0.055	6552	Minor	SANITARY WASTE
Hardin		0.055	6552	Minor	SANITARY WASTE
Hardin		0.055	6552	Minor	SANITARY WASTE
Hardin		0.055	6552	Minor	SANITARY WASTE
Hardin		0.055	6552	Minor	SANITARY WASTE
Hardin		0.055	6552	Minor	SANITARY WASTE
Hardin		0.055	6552	Minor	SANITARY WASTE
Hardin		0.055	6552	Minor	SANITARY WASTE
Hardin		0.055	6552	Minor	SANITARY WASTE
Hardin		0.055	6552	Minor	SANITARY WASTE
Hardin		0.055	6552	Minor	SANITARY WASTE
Hardin		0.055	6552	Minor	SANITARY WASTE
Hardin		0.055	6552	Minor	SANITARY WASTE
Hardin		0.055	6552	Minor	SANITARY WASTE
Hardin		0.055	6552	Minor	SANITARY WASTE
Hardin		0.055	6552	Minor	SANITARY WASTE
Hardin		0.055	6552	Minor	SANITARY WASTE
Hardin		0.055	6552	Minor	SANITARY WASTE
Hardin		0.055	6552	Minor	SANITARY WASTE
Hardin		0.055	6552	Minor	SANITARY WASTE
Hardin		0.055	6552	Minor	SANITARY WASTE
Hardin		0.055	6552	Minor	SANITARY WASTE
Hardin		0.055	6552	Minor	SANITARY WASTE
Hardin		0.055	6552	Minor	SANITARY WASTE
Hardin		0.055	6552	Minor	SANITARY WASTE
Hardin		0.055	6552	Minor	SANITARY WASTE
Hardin		0.055	6552	Minor	SANITARY WASTE
Hardin		0.055	6552	Minor	SANITARY WASTE
Hardin		0.055	6552	Minor	SANITARY WASTE
Hardin		0.055	6552	Minor	SANITARY WASTE
Hardin		0.055	6552	Minor	SANITARY WASTE
Hardin		0.055	6552	Minor	SANITARY WASTE
Hardin		0.055	6552	Minor	SANITARY WASTE
Hardin		0.055	6552	Minor	SANITARY WASTE
Hardin		0.055	6552	Minor	SANITARY WASTE
Hardin		0.055	6552	Minor	SANITARY WASTE
Hardin		0.055	6552	Minor	SANITARY WASTE
Hardin		0.055	6552	Minor	SANITARY WASTE
Hardin		0.055	6552	Minor	SANITARY WASTE
Hardin		0.055	6552	Minor	SANITARY WASTE
Hardin		0.055	6552	Minor	SANITARY WASTE
Hardin		0.055	6552	Minor	SANITARY WASTE
Hardin		0.055	6552	Minor	SANITARY WASTE
Hardin		0.055	6552	Minor	SANITARY WASTE

Hardin		0.055	6552	Minor	SANITARY WASTE
Hardin		0.055	6552	Minor	SANITARY WASTE
Hardin		0.055	6552	Minor	SANITARY WASTE
Hardin		0.055	6552	Minor	SANITARY WASTE
Hardin		0.055	6552	Minor	SANITARY WASTE
Hardin		0.055	6552	Minor	SANITARY WASTE
Hardin		0.055	6552	Minor	SANITARY WASTE
Hardin		0.055	6552	Minor	SANITARY WASTE
Hardin		0.055	6552	Minor	SANITARY WASTE
Hardin		0.055	6552	Minor	SANITARY WASTE
Hardin		0.055	6552	Minor	SANITARY WASTE
Hardin		0.055	6552	Minor	SANITARY WASTE
Hardin		0.055	6552	Minor	SANITARY WASTE
Hardin		0.055	6552	Minor	SANITARY WASTE
Hardin		0.055	6552	Minor	SANITARY WASTE
Hardin		0.055	6552	Minor	SANITARY WASTE
Hardin		0.055	6552	Minor	SANITARY WASTE
Hardin		0.055	6552	Minor	SANITARY WASTE
Hardin		0.055	6552	Minor	SANITARY WASTE
Hardin		0.055	6552	Minor	SANITARY WASTE
Hardin		0.055	6552	Minor	SANITARY WASTE
Hardin		0.055	6552	Minor	SANITARY WASTE
Hardin		0.055	6552	Minor	SANITARY WASTE
Hardin		0.055	6552	Minor	SANITARY WASTE
Hardin		0.055	6552	Minor	SANITARY WASTE
Hardin		0.055	6552	Minor	SANITARY WASTE
Hardin		0.055	6552	Minor	SANITARY WASTE
Hardin		0.055	6552	Minor	SANITARY WASTE
Hardin		0.055	6552	Minor	SANITARY WASTE
Hardin		0.055	6552	Minor	SANITARY WASTE
Hardin		0.055	6552	Minor	SANITARY WASTE
Hardin		0.055	6552	Minor	SANITARY WASTE
Hardin		0.055	6552	Minor	SANITARY WASTE
Hardin		0.055	6552	Minor	SANITARY WASTE
Hardin		0.055	6552	Minor	SANITARY WASTE
Hardin		0.055	6552	Minor	SANITARY WASTE
Hardin		0.055	6552	Minor	SANITARY WASTE
Hardin		0.055	6552	Minor	SANITARY WASTE
Hardin		0.055	6552	Minor	SANITARY WASTE
Hardin		0.055	6552	Minor	SANITARY WASTE
Hardin		0.055	6552	Minor	SANITARY WASTE
Hardin		0.055	6552	Minor	SANITARY WASTE
Hardin		0.055	6552	Minor	SANITARY WASTE
Hardin		0.055	6552	Minor	SANITARY WASTE
Hardin		0.055	6552	Minor	SANITARY WASTE
Hardin		0.055	6552	Minor	SANITARY WASTE
Hardin		0.055	6552	Minor	SANITARY WASTE
Hardin		0.055	6552	Minor	SANITARY WASTE
Hardin		0.055	6552	Minor	SANITARY WASTE
Hardin		0.055	6552	Minor	SANITARY WASTE
Hardin		0.055	6552	Minor	SANITARY WASTE

Hardin		0.055	6552	Minor	SANITARY WASTE
Hardin		0.055	6552	Minor	SANITARY WASTE
Hardin		0.055	6552	Minor	SANITARY WASTE
Hardin		0.055	6552	Minor	SANITARY WASTE
Hardin		0.055	6552	Minor	SANITARY WASTE
Hardin		0.055	6552	Minor	SANITARY WASTE
Hardin		0.055	6552	Minor	SANITARY WASTE
Hardin		0.055	6552	Minor	SANITARY WASTE
Hardin		0.055	6552	Minor	SANITARY WASTE
Hardin		0.055	6552	Minor	SANITARY WASTE
Hardin		0.055	6552	Minor	SANITARY WASTE
Hardin		0.055	6552	Minor	SANITARY WASTE
Hardin		0.055	6552	Minor	SANITARY WASTE
Hardin		0.055	6552	Minor	SANITARY WASTE
Hardin		0.055	6552	Minor	SANITARY WASTE
Hardin		0.055	6552	Minor	SANITARY WASTE
Hardin		0.055	6552	Minor	SANITARY WASTE
Hardin		0.055	6552	Minor	SANITARY WASTE
Hardin		0.055	6552	Minor	SANITARY WASTE
Hardin		0.055	6552	Minor	SANITARY WASTE
Hardin		0.055	6552	Minor	SANITARY WASTE
Hardin		0.055	6552	Minor	SANITARY WASTE
Hardin		0.055	6552	Minor	SANITARY WASTE
Hardin		0.055	6552	Minor	SANITARY WASTE
Hardin		0.055	6552	Minor	SANITARY WASTE
Hardin		0.055	6552	Minor	SANITARY WASTE
Hardin		0.055	6552	Minor	SANITARY WASTE
Hardin		0.055	6552	Minor	SANITARY WASTE
Hardin		0.055	6552	Minor	SANITARY WASTE
Hardin		0.055	6552	Minor	SANITARY WASTE
Hardin		0.055	6552	Minor	SANITARY WASTE
Hardin		0.055	6552	Minor	SANITARY WASTE
Hardin		0.055	6552	Minor	SANITARY WASTE
Hardin		0.055	6552	Minor	SANITARY WASTE
Hardin		0.055	6552	Minor	SANITARY WASTE
Hardin		0.055	6552	Minor	SANITARY WASTE
Hardin		0.055	6552	Minor	SANITARY WASTE
Hardin		0.055	6552	Minor	SANITARY WASTE
Hardin		0.055	6552	Minor	SANITARY WASTE
Hardin		0.055	6552	Minor	SANITARY WASTE
Hardin		0.055	6552	Minor	SANITARY WASTE
Hardin		0.055	6552	Minor	SANITARY WASTE
Hardin		0.055	6552	Minor	SANITARY WASTE
Hardin		0.055	6552	Minor	SANITARY WASTE
Hardin		0.055	6552	Minor	SANITARY WASTE
Hardin		0.055	6552	Minor	SANITARY WASTE
Hardin		0.055	6552	Minor	SANITARY WASTE
Hardin		0.055	6552	Minor	SANITARY WASTE
Hardin		0.055	6552	Minor	SANITARY WASTE
Hardin		0.055	6552	Minor	SANITARY WASTE
Hardin		0.055	6552	Minor	SANITARY WASTE

Hardin		0.055	6552	Minor	SANITARY WASTE
Hardin		0.055	6552	Minor	SANITARY WASTE
Hardin		0.055	6552	Minor	SANITARY WASTE
Hardin		0.055	6552	Minor	SANITARY WASTE
Hardin		0.055	6552	Minor	SANITARY WASTE

Number of Report	umber of Submissio	R Initial Monitoring	R Initial DMR Due D	Perm Feature ID	Limit Set Designato
1	1	2/1/2009	3/28/2009	001	1
1	1	2/1/2009	3/28/2009	001	1
1	1	2/1/2009	3/28/2009	001	1
1	1	2/1/2009	3/28/2009	001	1
1	1	2/1/2009	3/28/2009	001	1
1	1	2/1/2009	3/28/2009	001	1
1	1	2/1/2009	3/28/2009	001	1
1	1	2/1/2009	3/28/2009	001	1
1	1	2/1/2009	3/28/2009	001	1
1	1	2/1/2009	3/28/2009	001	1
1	1	2/1/2009	3/28/2009	001	1
1	1	2/1/2009	3/28/2009	001	1
1	1	2/1/2009	3/28/2009	001	1
1	1	2/1/2009	3/28/2009	001	1
1	1	2/1/2009	3/28/2009	001	1
1	1	2/1/2009	3/28/2009	001	1
1	1	2/1/2009	3/28/2009	001	1
1	1	2/1/2009	3/28/2009	001	1
1	1	2/1/2009	3/28/2009	001	1
1	1	2/1/2009	3/28/2009	001	1
1	1	2/1/2009	3/28/2009	001	1
1	1	2/1/2009	3/28/2009	001	1
1	1	2/1/2009	3/28/2009	001	1
1	1	2/1/2009	3/28/2009	001	1
1	1	2/1/2009	3/28/2009	001	1
1	1	2/1/2009	3/28/2009	001	1
1	1	2/1/2009	3/28/2009	001	1
1	1	2/1/2009	3/28/2009	001	1
1	1	2/1/2009	3/28/2009	001	1
1	1	2/1/2009	3/28/2009	001	1
1	1	2/1/2009	3/28/2009	001	1
1	1	2/1/2009	3/28/2009	001	1
1	1	2/1/2009	3/28/2009	001	1
1	1	2/1/2009	3/28/2009	001	1
1	1	2/1/2009	3/28/2009	001	1
1	1	2/1/2009	3/28/2009	001	1
1	1	2/1/2009	3/28/2009	001	1
1	1	2/1/2009	3/28/2009	001	1
1	1	2/1/2009	3/28/2009	001	1
1	1	2/1/2009	3/28/2009	001	1
1	1	2/1/2009	3/28/2009	001	1
1	1	2/1/2009	3/28/2009	001	1
1	1	2/1/2009	3/28/2009	001	1
1	1	2/1/2009	3/28/2009	001	1
1	1	2/1/2009	3/28/2009	001	1
1	1	2/1/2009	3/28/2009	001	1
1	1	2/1/2009	3/28/2009	001	1
1	1	2/1/2009	3/28/2009	001	1
1	1	2/1/2009	3/28/2009	001	1
1	1	2/1/2009	3/28/2009	001	1

1	1	2/1/2009	3/28/2009	001	1
1	1	2/1/2009	3/28/2009	001	1
1	1	2/1/2009	3/28/2009	001	1
1	1	2/1/2009	3/28/2009	001	1
1	1	2/1/2009	3/28/2009	001	1
1	1	2/1/2009	3/28/2009	001	1
1	1	2/1/2009	3/28/2009	001	1
1	1	2/1/2009	3/28/2009	001	1
1	1	2/1/2009	3/28/2009	001	1
1	1	2/1/2009	3/28/2009	001	1
1	1	2/1/2009	3/28/2009	001	1
1	1	2/1/2009	3/28/2009	001	1
1	1	2/1/2009	3/28/2009	001	1
1	1	2/1/2009	3/28/2009	001	1
1	1	2/1/2009	3/28/2009	001	1
1	1	2/1/2009	3/28/2009	001	1
1	1	2/1/2009	3/28/2009	001	1
1	1	2/1/2009	3/28/2009	001	1
1	1	2/1/2009	3/28/2009	001	1
1	1	2/1/2009	3/28/2009	001	1
1	1	2/1/2009	3/28/2009	001	1
1	1	2/1/2009	3/28/2009	001	1
1	1	2/1/2009	3/28/2009	001	1
1	1	2/1/2009	3/28/2009	001	1
1	1	2/1/2009	3/28/2009	001	1
1	1	2/1/2009	3/28/2009	001	1
1	1	2/1/2009	3/28/2009	001	1
1	1	2/1/2009	3/28/2009	001	1
1	1	2/1/2009	3/28/2009	001	1
1	1	2/1/2009	3/28/2009	001	1
1	1	2/1/2009	3/28/2009	001	1
1	1	2/1/2009	3/28/2009	001	1
1	1	2/1/2009	3/28/2009	001	1
1	1	2/1/2009	3/28/2009	001	1
1	1	2/1/2009	3/28/2009	001	1
1	1	2/1/2009	3/28/2009	001	1
1	1	2/1/2009	3/28/2009	001	1
1	1	2/1/2009	3/28/2009	001	1
1	1	2/1/2009	3/28/2009	001	1
1	1	2/1/2009	3/28/2009	001	1
1	1	2/1/2009	3/28/2009	001	1
1	1	2/1/2009	3/28/2009	001	1
1	1	2/1/2009	3/28/2009	001	1
1	1	2/1/2009	3/28/2009	001	1
1	1	2/1/2009	3/28/2009	001	1
1	1	2/1/2009	3/28/2009	001	1
1	1	2/1/2009	3/28/2009	001	1
1	1	2/1/2009	3/28/2009	001	1
1	1	2/1/2009	3/28/2009	001	1
1	1	2/1/2009	3/28/2009	001	1
1	1	2/1/2009	3/28/2009	001	1

1	1	2/1/2009	3/28/2009	001	1
1	1	2/1/2009	3/28/2009	001	1
1	1	2/1/2009	3/28/2009	001	1
1	1	2/1/2009	3/28/2009	001	1
1	1	2/1/2009	3/28/2009	001	1
1	1	2/1/2009	3/28/2009	001	1
1	1	2/1/2009	3/28/2009	001	1
1	1	2/1/2009	3/28/2009	001	1
1	1	2/1/2009	3/28/2009	001	1
1	1	2/1/2009	3/28/2009	001	1
1	1	2/1/2009	3/28/2009	001	1
1	1	2/1/2009	3/28/2009	001	1
1	1	2/1/2009	3/28/2009	001	1
1	1	2/1/2009	3/28/2009	001	1
1	1	2/1/2009	3/28/2009	001	1
1	1	2/1/2009	3/28/2009	001	1
1	1	2/1/2009	3/28/2009	001	1
1	1	2/1/2009	3/28/2009	001	1
1	1	2/1/2009	3/28/2009	001	1
1	1	2/1/2009	3/28/2009	001	1
1	1	2/1/2009	3/28/2009	001	1
1	1	2/1/2009	3/28/2009	001	1
1	1	2/1/2009	3/28/2009	001	1
1	1	2/1/2009	3/28/2009	001	1
1	1	2/1/2009	3/28/2009	001	1
1	1	2/1/2009	3/28/2009	001	1
1	1	2/1/2009	3/28/2009	001	1
1	1	2/1/2009	3/28/2009	001	1
1	1	2/1/2009	3/28/2009	001	1
1	1	2/1/2009	3/28/2009	001	1
1	1	2/1/2009	3/28/2009	001	1
1	1	2/1/2009	3/28/2009	001	1
1	1	2/1/2009	3/28/2009	001	1
1	1	2/1/2009	3/28/2009	001	1
1	1	2/1/2009	3/28/2009	001	1
1	1	2/1/2009	3/28/2009	001	1
1	1	2/1/2009	3/28/2009	001	1
1	1	2/1/2009	3/28/2009	001	1
1	1	2/1/2009	3/28/2009	001	1
1	1	2/1/2009	3/28/2009	001	1
1	1	2/1/2009	3/28/2009	001	1
1	1	2/1/2009	3/28/2009	001	1
1	1	2/1/2009	3/28/2009	001	1
1	1	2/1/2009	3/28/2009	001	1
1	1	2/1/2009	3/28/2009	001	1
1	1	2/1/2009	3/28/2009	001	1
1	1	2/1/2009	3/28/2009	001	1
1	1	2/1/2009	3/28/2009	001	1
1	1	2/1/2009	3/28/2009	001	1
1	1	2/1/2009	3/28/2009	001	1
1	1	2/1/2009	3/28/2009	001	1

1	1	2/1/2009	3/28/2009	001	1
1	1	2/1/2009	3/28/2009	001	1
1	1	2/1/2009	3/28/2009	001	1
1	1	2/1/2009	3/28/2009	001	1
1	1	2/1/2009	3/28/2009	001	1
1	1	2/1/2009	3/28/2009	001	1
1	1	2/1/2009	3/28/2009	001	1
1	1	2/1/2009	3/28/2009	001	1
1	1	2/1/2009	3/28/2009	001	1
1	1	2/1/2009	3/28/2009	001	1
1	1	2/1/2009	3/28/2009	001	1
1	1	2/1/2009	3/28/2009	001	1
1	1	2/1/2009	3/28/2009	001	1
1	1	2/1/2009	3/28/2009	001	1
1	1	2/1/2009	3/28/2009	001	1
1	1	2/1/2009	3/28/2009	001	1
1	1	2/1/2009	3/28/2009	001	1
1	1	2/1/2009	3/28/2009	001	1
1	1	2/1/2009	3/28/2009	001	1
1	1	2/1/2009	3/28/2009	001	1
1	1	2/1/2009	3/28/2009	001	1
1	1	2/1/2009	3/28/2009	001	1
1	1	2/1/2009	3/28/2009	001	1
1	1	2/1/2009	3/28/2009	001	1
1	1	2/1/2009	3/28/2009	001	1
1	1	2/1/2009	3/28/2009	001	1
1	1	2/1/2009	3/28/2009	001	1
1	1	2/1/2009	3/28/2009	001	1
1	1	2/1/2009	3/28/2009	001	1
1	1	2/1/2009	3/28/2009	001	1
1	1	2/1/2009	3/28/2009	001	1
1	1	2/1/2009	3/28/2009	001	1
1	1	2/1/2009	3/28/2009	001	1
1	1	2/1/2009	3/28/2009	001	1
1	1	2/1/2009	3/28/2009	001	1
1	1	2/1/2009	3/28/2009	001	1
1	1	2/1/2009	3/28/2009	001	1
1	1	2/1/2009	3/28/2009	001	1
1	1	2/1/2009	3/28/2009	001	1
1	1	2/1/2009	3/28/2009	001	1
1	1	2/1/2009	3/28/2009	001	1
1	1	2/1/2009	3/28/2009	001	1
1	1	2/1/2009	3/28/2009	001	1
1	1	2/1/2009	3/28/2009	001	1
1	1	2/1/2009	3/28/2009	001	1
1	1	2/1/2009	3/28/2009	001	1
1	1	2/1/2009	3/28/2009	001	1
1	1	2/1/2009	3/28/2009	001	1
1	1	2/1/2009	3/28/2009	001	1
1	1	2/1/2009	3/28/2009	001	1
1	1	2/1/2009	3/28/2009	001	1

1	1	2/1/2009	3/28/2009	001	1
1	1	2/1/2009	3/28/2009	001	1
1	1	2/1/2009	3/28/2009	001	1
1	1	2/1/2009	3/28/2009	001	1
1	1	2/1/2009	3/28/2009	001	1
1	1	2/1/2009	3/28/2009	001	1
1	1	2/1/2009	3/28/2009	001	1
1	1	2/1/2009	3/28/2009	001	1
1	1	2/1/2009	3/28/2009	001	1
1	1	2/1/2009	3/28/2009	001	1
1	1	2/1/2009	3/28/2009	001	1
1	1	2/1/2009	3/28/2009	001	1
1	1	2/1/2009	3/28/2009	001	1
1	1	2/1/2009	3/28/2009	001	1
1	1	2/1/2009	3/28/2009	001	1
1	1	2/1/2009	3/28/2009	001	1
1	1	2/1/2009	3/28/2009	001	1
1	1	2/1/2009	3/28/2009	001	1
1	1	2/1/2009	3/28/2009	001	1
1	1	2/1/2009	3/28/2009	001	1
1	1	2/1/2009	3/28/2009	001	1
1	1	2/1/2009	3/28/2009	001	1
1	1	2/1/2009	3/28/2009	001	1
1	1	2/1/2009	3/28/2009	001	1
1	1	2/1/2009	3/28/2009	001	1
1	1	2/1/2009	3/28/2009	001	1
1	1	2/1/2009	3/28/2009	001	1
1	1	2/1/2009	3/28/2009	001	1
1	1	2/1/2009	3/28/2009	001	1
1	1	2/1/2009	3/28/2009	001	1
1	1	2/1/2009	3/28/2009	001	1
1	1	2/1/2009	3/28/2009	001	1
1	1	2/1/2009	3/28/2009	001	1
1	1	2/1/2009	3/28/2009	001	1
1	1	2/1/2009	3/28/2009	001	1
1	1	2/1/2009	3/28/2009	001	1
1	1	2/1/2009	3/28/2009	001	1
1	1	2/1/2009	3/28/2009	001	1
1	1	2/1/2009	3/28/2009	001	1
1	1	2/1/2009	3/28/2009	001	1
1	1	2/1/2009	3/28/2009	001	1
1	1	2/1/2009	3/28/2009	001	1
1	1	2/1/2009	3/28/2009	001	1
1	1	2/1/2009	3/28/2009	001	1
1	1	2/1/2009	3/28/2009	001	1
1	1	2/1/2009	3/28/2009	001	1
1	1	2/1/2009	3/28/2009	001	1
1	1	2/1/2009	3/28/2009	001	1
1	1	2/1/2009	3/28/2009	001	1
1	1	2/1/2009	3/28/2009	001	1
1	1	2/1/2009	3/28/2009	001	1

1	1	2/1/2009	3/28/2009	001	1
1	1	2/1/2009	3/28/2009	001	1
1	1	2/1/2009	3/28/2009	001	1
1	1	2/1/2009	3/28/2009	001	1
1	1	2/1/2009	3/28/2009	001	1
1	1	2/1/2009	3/28/2009	001	1
1	1	2/1/2009	3/28/2009	001	1
1	1	2/1/2009	3/28/2009	001	1
1	1	2/1/2009	3/28/2009	001	1
1	1	2/1/2009	3/28/2009	001	1
1	1	2/1/2009	3/28/2009	001	1
1	1	2/1/2009	3/28/2009	001	1
1	1	2/1/2009	3/28/2009	001	1
1	1	2/1/2009	3/28/2009	001	1
1	1	2/1/2009	3/28/2009	001	1
1	1	2/1/2009	3/28/2009	001	1
1	1	2/1/2009	3/28/2009	001	1
1	1	2/1/2009	3/28/2009	001	1
1	1	2/1/2009	3/28/2009	001	1
1	1	2/1/2009	3/28/2009	001	1
1	1	2/1/2009	3/28/2009	001	1
1	1	2/1/2009	3/28/2009	001	1
1	1	2/1/2009	3/28/2009	001	1
1	1	2/1/2009	3/28/2009	001	1
1	1	2/1/2009	3/28/2009	001	1
1	1	2/1/2009	3/28/2009	001	1
1	1	2/1/2009	3/28/2009	001	1
1	1	2/1/2009	3/28/2009	001	1
1	1	2/1/2009	3/28/2009	001	1
1	1	2/1/2009	3/28/2009	001	1
1	1	2/1/2009	3/28/2009	001	1
1	1	2/1/2009	3/28/2009	001	1
1	1	2/1/2009	3/28/2009	001	1
1	1	2/1/2009	3/28/2009	001	1
1	1	2/1/2009	3/28/2009	001	1
1	1	2/1/2009	3/28/2009	001	1
1	1	2/1/2009	3/28/2009	001	1
1	1	2/1/2009	3/28/2009	001	1
1	1	2/1/2009	3/28/2009	001	1
1	1	2/1/2009	3/28/2009	001	1
1	1	2/1/2009	3/28/2009	001	1
1	1	2/1/2009	3/28/2009	001	1
1	1	2/1/2009	3/28/2009	001	1
1	1	2/1/2009	3/28/2009	001	1
1	1	2/1/2009	3/28/2009	001	1
1	1	2/1/2009	3/28/2009	001	1
1	1	2/1/2009	3/28/2009	001	1
1	1	2/1/2009	3/28/2009	001	1
1	1	2/1/2009	3/28/2009	001	1
1	1	2/1/2009	3/28/2009	001	1
1	1	2/1/2009	3/28/2009	001	1

1	1	2/1/2009	3/28/2009	001	1
1	1	2/1/2009	3/28/2009	001	1
1	1	2/1/2009	3/28/2009	001	1
1	1	2/1/2009	3/28/2009	001	1
1	1	2/1/2009	3/28/2009	001	1
1	1	2/1/2009	3/28/2009	001	1
1	1	2/1/2009	3/28/2009	001	1
1	1	2/1/2009	3/28/2009	001	1
1	1	2/1/2009	3/28/2009	001	1
1	1	2/1/2009	3/28/2009	001	1
1	1	2/1/2009	3/28/2009	001	1
1	1	2/1/2009	3/28/2009	001	1
1	1	2/1/2009	3/28/2009	001	1
1	1	2/1/2009	3/28/2009	001	1
1	1	2/1/2009	3/28/2009	001	1
1	1	2/1/2009	3/28/2009	001	1
1	1	2/1/2009	3/28/2009	001	1
1	1	2/1/2009	3/28/2009	001	1
1	1	2/1/2009	3/28/2009	001	1
1	1	2/1/2009	3/28/2009	001	1
1	1	2/1/2009	3/28/2009	001	1
1	1	2/1/2009	3/28/2009	001	1
1	1	2/1/2009	3/28/2009	001	1
1	1	2/1/2009	3/28/2009	001	1
1	1	2/1/2009	3/28/2009	001	1
1	1	2/1/2009	3/28/2009	001	1
1	1	2/1/2009	3/28/2009	001	1
1	1	2/1/2009	3/28/2009	001	1
1	1	2/1/2009	3/28/2009	001	1
1	1	2/1/2009	3/28/2009	001	1
1	1	2/1/2009	3/28/2009	001	1
1	1	2/1/2009	3/28/2009	001	1
1	1	2/1/2009	3/28/2009	001	1
1	1	2/1/2009	3/28/2009	001	1
1	1	2/1/2009	3/28/2009	001	1
1	1	2/1/2009	3/28/2009	001	1
1	1	2/1/2009	3/28/2009	001	1
1	1	2/1/2009	3/28/2009	001	1
1	1	2/1/2009	3/28/2009	001	1
1	1	2/1/2009	3/28/2009	001	1
1	1	2/1/2009	3/28/2009	001	1
1	1	2/1/2009	3/28/2009	001	1
1	1	2/1/2009	3/28/2009	001	1
1	1	2/1/2009	3/28/2009	001	1
1	1	2/1/2009	3/28/2009	001	1
1	1	2/1/2009	3/28/2009	001	1
1	1	2/1/2009	3/28/2009	001	1
1	1	2/1/2009	3/28/2009	001	1
1	1	2/1/2009	3/28/2009	001	1
1	1	2/1/2009	3/28/2009	001	1
1	1	2/1/2009	3/28/2009	001	1

1	1	2/1/2009	3/28/2009	001	1
1	1	2/1/2009	3/28/2009	001	1
1	1	2/1/2009	3/28/2009	001	1
1	1	2/1/2009	3/28/2009	001	1
1	1	2/1/2009	3/28/2009	001	1
1	1	2/1/2009	3/28/2009	001	1
1	1	2/1/2009	3/28/2009	001	1
1	1	2/1/2009	3/28/2009	001	1
1	1	2/1/2009	3/28/2009	001	1
1	1	2/1/2009	3/28/2009	001	1
1	1	2/1/2009	3/28/2009	001	1
1	1	2/1/2009	3/28/2009	001	1
1	1	2/1/2009	3/28/2009	001	1
1	1	2/1/2009	3/28/2009	001	1
1	1	2/1/2009	3/28/2009	001	1
1	1	2/1/2009	3/28/2009	001	1
1	1	2/1/2009	3/28/2009	001	1
1	1	2/1/2009	3/28/2009	001	1
1	1	2/1/2009	3/28/2009	001	1
1	1	2/1/2009	3/28/2009	001	1
1	1	2/1/2009	3/28/2009	001	1
1	1	2/1/2009	3/28/2009	001	1
1	1	2/1/2009	3/28/2009	001	1
1	1	2/1/2009	3/28/2009	001	1
1	1	2/1/2009	3/28/2009	001	1
1	1	2/1/2009	3/28/2009	001	1
1	1	2/1/2009	3/28/2009	001	1
1	1	2/1/2009	3/28/2009	001	1
1	1	2/1/2009	3/28/2009	001	1
1	1	2/1/2009	3/28/2009	001	1
1	1	2/1/2009	3/28/2009	001	1
1	1	2/1/2009	3/28/2009	001	1
1	1	2/1/2009	3/28/2009	001	1
1	1	2/1/2009	3/28/2009	001	1
1	1	2/1/2009	3/28/2009	001	1
1	1	2/1/2009	3/28/2009	001	1
1	1	2/1/2009	3/28/2009	001	1
1	1	2/1/2009	3/28/2009	001	1
1	1	2/1/2009	3/28/2009	001	1
1	1	2/1/2009	3/28/2009	001	1
1	1	2/1/2009	3/28/2009	001	1
1	1	2/1/2009	3/28/2009	001	1
1	1	2/1/2009	3/28/2009	001	1
1	1	2/1/2009	3/28/2009	001	1
1	1	2/1/2009	3/28/2009	001	1
1	1	2/1/2009	3/28/2009	001	1
1	1	2/1/2009	3/28/2009	001	1
1	1	2/1/2009	3/28/2009	001	1
1	1	2/1/2009	3/28/2009	001	1
1	1	2/1/2009	3/28/2009	001	1
1	1	2/1/2009	3/28/2009	001	1

1	1	2/1/2009	3/28/2009	001	1
1	1	2/1/2009	3/28/2009	001	1
1	1	2/1/2009	3/28/2009	001	1
1	1	2/1/2009	3/28/2009	001	1
1	1	2/1/2009	3/28/2009	001	1
1	1	2/1/2009	3/28/2009	001	1
1	1	2/1/2009	3/28/2009	001	1
1	1	2/1/2009	3/28/2009	001	1
1	1	2/1/2009	3/28/2009	001	1
1	1	2/1/2009	3/28/2009	001	1
1	1	2/1/2009	3/28/2009	001	1
1	1	2/1/2009	3/28/2009	001	1
1	1	2/1/2009	3/28/2009	001	1
1	1	2/1/2009	3/28/2009	001	1
1	1	2/1/2009	3/28/2009	001	1
1	1	2/1/2009	3/28/2009	001	1
1	1	2/1/2009	3/28/2009	001	1
1	1	2/1/2009	3/28/2009	001	1
1	1	2/1/2009	3/28/2009	001	1
1	1	2/1/2009	3/28/2009	001	1
1	1	2/1/2009	3/28/2009	001	1
1	1	2/1/2009	3/28/2009	001	1
1	1	2/1/2009	3/28/2009	001	1
1	1	2/1/2009	3/28/2009	001	1
1	1	2/1/2009	3/28/2009	001	1
1	1	2/1/2009	3/28/2009	001	1
1	1	2/1/2009	3/28/2009	001	1
1	1	2/1/2009	3/28/2009	001	1
1	1	2/1/2009	3/28/2009	001	1
1	1	2/1/2009	3/28/2009	001	1
1	1	2/1/2009	3/28/2009	001	1
1	1	2/1/2009	3/28/2009	001	1
1	1	2/1/2009	3/28/2009	001	1
1	1	2/1/2009	3/28/2009	001	1
1	1	2/1/2009	3/28/2009	001	1
1	1	2/1/2009	3/28/2009	001	1
1	1	2/1/2009	3/28/2009	001	1
1	1	2/1/2009	3/28/2009	001	1
1	1	2/1/2009	3/28/2009	001	1
1	1	2/1/2009	3/28/2009	001	1
1	1	2/1/2009	3/28/2009	001	1
1	1	2/1/2009	3/28/2009	001	1
1	1	2/1/2009	3/28/2009	001	1
1	1	2/1/2009	3/28/2009	001	1
1	1	2/1/2009	3/28/2009	001	1
1	1	2/1/2009	3/28/2009	001	1
1	1	2/1/2009	3/28/2009	001	1
1	1	2/1/2009	3/28/2009	001	1
1	1	2/1/2009	3/28/2009	001	1
1	1	2/1/2009	3/28/2009	001	1
1	1	2/1/2009	3/28/2009	001	1

1	1	2/1/2009	3/28/2009	001	1
1	1	2/1/2009	3/28/2009	001	1
1	1	2/1/2009	3/28/2009	001	1
1	1	2/1/2009	3/28/2009	001	1
1	1	2/1/2009	3/28/2009	001	1
1	1	2/1/2009	3/28/2009	001	1
1	1	2/1/2009	3/28/2009	001	1
1	1	2/1/2009	3/28/2009	001	1
1	1	2/1/2009	3/28/2009	001	1
1	1	2/1/2009	3/28/2009	001	1
1	1	2/1/2009	3/28/2009	001	1
1	1	2/1/2009	3/28/2009	001	1
1	1	2/1/2009	3/28/2009	001	1
1	1	2/1/2009	3/28/2009	001	1
1	1	2/1/2009	3/28/2009	001	1
1	1	2/1/2009	3/28/2009	001	1
1	1	2/1/2009	3/28/2009	001	1
1	1	2/1/2009	3/28/2009	001	1
1	1	2/1/2009	3/28/2009	001	1
1	1	2/1/2009	3/28/2009	001	1
1	1	2/1/2009	3/28/2009	001	1
1	1	2/1/2009	3/28/2009	001	1
1	1	2/1/2009	3/28/2009	001	1
1	1	2/1/2009	3/28/2009	001	1
1	1	2/1/2009	3/28/2009	001	1
1	1	2/1/2009	3/28/2009	001	1
1	1	2/1/2009	3/28/2009	001	1
1	1	2/1/2009	3/28/2009	001	1
1	1	2/1/2009	3/28/2009	001	1
1	1	2/1/2009	3/28/2009	001	1
1	1	2/1/2009	3/28/2009	001	1
1	1	2/1/2009	3/28/2009	001	1
1	1	2/1/2009	3/28/2009	001	1
1	1	2/1/2009	3/28/2009	001	1
1	1	2/1/2009	3/28/2009	001	1
1	1	2/1/2009	3/28/2009	001	1
1	1	2/1/2009	3/28/2009	001	1
1	1	2/1/2009	3/28/2009	001	1
1	1	2/1/2009	3/28/2009	001	1
1	1	2/1/2009	3/28/2009	001	1
1	1	2/1/2009	3/28/2009	001	1
1	1	2/1/2009	3/28/2009	001	1
1	1	2/1/2009	3/28/2009	001	1
1	1	2/1/2009	3/28/2009	001	1
1	1	2/1/2009	3/28/2009	001	1
1	1	2/1/2009	3/28/2009	001	1
1	1	2/1/2009	3/28/2009	001	1
1	1	2/1/2009	3/28/2009	001	1
1	1	2/1/2009	3/28/2009	001	1
1	1	2/1/2009	3/28/2009	001	1
1	1	2/1/2009	3/28/2009	001	1

1	1	2/1/2009	3/28/2009	001	1
1	1	2/1/2009	3/28/2009	001	1
1	1	2/1/2009	3/28/2009	001	1
1	1	2/1/2009	3/28/2009	001	1
1	1	2/1/2009	3/28/2009	001	1
1	1	2/1/2009	3/28/2009	001	1
1	1	2/1/2009	3/28/2009	001	1
1	1	2/1/2009	3/28/2009	001	1
1	1	2/1/2009	3/28/2009	001	1
1	1	2/1/2009	3/28/2009	001	1
1	1	2/1/2009	3/28/2009	001	1
1	1	2/1/2009	3/28/2009	001	1
1	1	2/1/2009	3/28/2009	001	1
1	1	2/1/2009	3/28/2009	001	1
1	1	2/1/2009	3/28/2009	001	1
1	1	2/1/2009	3/28/2009	001	1
1	1	2/1/2009	3/28/2009	001	1
1	1	2/1/2009	3/28/2009	001	1
1	1	2/1/2009	3/28/2009	001	1
1	1	2/1/2009	3/28/2009	001	1
1	1	2/1/2009	3/28/2009	001	1
1	1	2/1/2009	3/28/2009	001	1
1	1	2/1/2009	3/28/2009	001	1
1	1	2/1/2009	3/28/2009	001	1
1	1	2/1/2009	3/28/2009	001	1
1	1	2/1/2009	3/28/2009	001	1
1	1	2/1/2009	3/28/2009	001	1
1	1	2/1/2009	3/28/2009	001	1
1	1	2/1/2009	3/28/2009	001	1
1	1	2/1/2009	3/28/2009	001	1
1	1	2/1/2009	3/28/2009	001	1
1	1	2/1/2009	3/28/2009	001	1
1	1	2/1/2009	3/28/2009	001	1
1	1	2/1/2009	3/28/2009	001	1
1	1	2/1/2009	3/28/2009	001	1
1	1	2/1/2009	3/28/2009	001	1
1	1	2/1/2009	3/28/2009	001	1
1	1	2/1/2009	3/28/2009	001	1
1	1	2/1/2009	3/28/2009	001	1
1	1	2/1/2009	3/28/2009	001	1
1	1	2/1/2009	3/28/2009	001	1
1	1	2/1/2009	3/28/2009	001	1
1	1	2/1/2009	3/28/2009	001	1
1	1	2/1/2009	3/28/2009	001	1
1	1	2/1/2009	3/28/2009	001	1
1	1	2/1/2009	3/28/2009	001	1
1	1	2/1/2009	3/28/2009	001	1
1	1	2/1/2009	3/28/2009	001	1
1	1	2/1/2009	3/28/2009	001	1
1	1	2/1/2009	3/28/2009	001	1
1	1	2/1/2009	3/28/2009	001	1

1	1	2/1/2009	3/28/2009	001	1
1	1	2/1/2009	3/28/2009	001	1
1	1	2/1/2009	3/28/2009	001	1
1	1	2/1/2009	3/28/2009	001	1
1	1	2/1/2009	3/28/2009	001	1
1	1	2/1/2009	3/28/2009	001	1
1	1	2/1/2009	3/28/2009	001	1
1	1	2/1/2009	3/28/2009	001	1
1	1	2/1/2009	3/28/2009	001	1
1	1	2/1/2009	3/28/2009	001	1
1	1	2/1/2009	3/28/2009	001	1
1	1	2/1/2009	3/28/2009	001	1
1	1	2/1/2009	3/28/2009	001	1
1	1	2/1/2009	3/28/2009	001	1
1	1	2/1/2009	3/28/2009	001	1
1	1	2/1/2009	3/28/2009	001	1
1	1	2/1/2009	3/28/2009	001	1
1	1	2/1/2009	3/28/2009	001	1
1	1	2/1/2009	3/28/2009	001	1
1	1	2/1/2009	3/28/2009	001	1
1	1	2/1/2009	3/28/2009	001	1
1	1	2/1/2009	3/28/2009	001	1
1	1	2/1/2009	3/28/2009	001	1
1	1	2/1/2009	3/28/2009	001	1
1	1	2/1/2009	3/28/2009	001	1
1	1	2/1/2009	3/28/2009	001	1
1	1	2/1/2009	3/28/2009	001	1
1	1	2/1/2009	3/28/2009	001	1
1	1	2/1/2009	3/28/2009	001	1
1	1	2/1/2009	3/28/2009	001	1
1	1	2/1/2009	3/28/2009	001	1
1	1	2/1/2009	3/28/2009	001	1
1	1	2/1/2009	3/28/2009	001	1
1	1	2/1/2009	3/28/2009	001	1
1	1	2/1/2009	3/28/2009	001	1
1	1	2/1/2009	3/28/2009	001	1
1	1	2/1/2009	3/28/2009	001	1
1	1	2/1/2009	3/28/2009	001	1
1	1	2/1/2009	3/28/2009	001	1
1	1	2/1/2009	3/28/2009	001	1
1	1	2/1/2009	3/28/2009	001	1
1	1	2/1/2009	3/28/2009	001	1
1	1	2/1/2009	3/28/2009	001	1
1	1	2/1/2009	3/28/2009	001	1
1	1	2/1/2009	3/28/2009	001	1
1	1	2/1/2009	3/28/2009	001	1
1	1	2/1/2009	3/28/2009	001	1
1	1	2/1/2009	3/28/2009	001	1
1	1	2/1/2009	3/28/2009	001	1
1	1	2/1/2009	3/28/2009	001	1
1	1	2/1/2009	3/28/2009	001	1

1	1	2/1/2009	3/28/2009	001	1
1	1	2/1/2009	3/28/2009	001	1
1	1	2/1/2009	3/28/2009	001	1
1	1	2/1/2009	3/28/2009	001	1
1	1	2/1/2009	3/28/2009	001	1
1	1	2/1/2009	3/28/2009	001	1
1	1	2/1/2009	3/28/2009	001	1
1	1	2/1/2009	3/28/2009	001	1
1	1	2/1/2009	3/28/2009	001	1
1	1	2/1/2009	3/28/2009	001	1
1	1	2/1/2009	3/28/2009	001	1
1	1	2/1/2009	3/28/2009	001	1
1	1	2/1/2009	3/28/2009	001	1
1	1	2/1/2009	3/28/2009	001	1
1	1	2/1/2009	3/28/2009	001	1
1	1	2/1/2009	3/28/2009	001	1
1	1	2/1/2009	3/28/2009	001	1
1	1	2/1/2009	3/28/2009	001	1
1	1	2/1/2009	3/28/2009	001	1
1	1	2/1/2009	3/28/2009	001	1
1	1	2/1/2009	3/28/2009	001	1
1	1	2/1/2009	3/28/2009	001	1
1	1	2/1/2009	3/28/2009	001	1
1	1	2/1/2009	3/28/2009	001	1
1	1	2/1/2009	3/28/2009	001	1
1	1	2/1/2009	3/28/2009	001	1
1	1	2/1/2009	3/28/2009	001	1
1	1	2/1/2009	3/28/2009	001	1
1	1	2/1/2009	3/28/2009	001	1
1	1	2/1/2009	3/28/2009	001	1
1	1	2/1/2009	3/28/2009	001	1
1	1	2/1/2009	3/28/2009	001	1
1	1	2/1/2009	3/28/2009	001	1
1	1	2/1/2009	3/28/2009	001	1
1	1	2/1/2009	3/28/2009	001	1
1	1	2/1/2009	3/28/2009	001	1
1	1	2/1/2009	3/28/2009	001	1
1	1	2/1/2009	3/28/2009	001	1
1	1	2/1/2009	3/28/2009	001	1
1	1	2/1/2009	3/28/2009	001	1
1	1	2/1/2009	3/28/2009	001	1
1	1	2/1/2009	3/28/2009	001	1
1	1	2/1/2009	3/28/2009	001	1
1	1	2/1/2009	3/28/2009	001	1
1	1	2/1/2009	3/28/2009	001	1
1	1	2/1/2009	3/28/2009	001	1
1	1	2/1/2009	3/28/2009	001	1
1	1	2/1/2009	3/28/2009	001	1
1	1	2/1/2009	3/28/2009	001	1
1	1	2/1/2009	3/28/2009	001	1
1	1	2/1/2009	3/28/2009	001	1

1	1	2/1/2009	3/28/2009	001	1
1	1	2/1/2009	3/28/2009	001	1
1	1	2/1/2009	3/28/2009	001	1
1	1	2/1/2009	3/28/2009	001	1
1	1	2/1/2009	3/28/2009	001	1
1	1	2/1/2009	3/28/2009	001	1
1	1	2/1/2009	3/28/2009	001	1
1	1	2/1/2009	3/28/2009	001	1
1	1	2/1/2009	3/28/2009	001	1
1	1	2/1/2009	3/28/2009	001	1
1	1	2/1/2009	3/28/2009	001	1
1	1	2/1/2009	3/28/2009	001	1
1	1	2/1/2009	3/28/2009	001	1
1	1	2/1/2009	3/28/2009	001	1
1	1	2/1/2009	3/28/2009	001	1
1	1	2/1/2009	3/28/2009	001	1
1	1	2/1/2009	3/28/2009	001	1
1	1	2/1/2009	3/28/2009	001	1
1	1	2/1/2009	3/28/2009	001	1
1	1	2/1/2009	3/28/2009	001	1
1	1	2/1/2009	3/28/2009	001	1
1	1	2/1/2009	3/28/2009	001	1
1	1	2/1/2009	3/28/2009	001	1
1	1	2/1/2009	3/28/2009	001	1
1	1	2/1/2009	3/28/2009	001	1
1	1	2/1/2009	3/28/2009	001	1
1	1	2/1/2009	3/28/2009	001	1
1	1	2/1/2009	3/28/2009	001	1
1	1	2/1/2009	3/28/2009	001	1
1	1	2/1/2009	3/28/2009	001	1
1	1	2/1/2009	3/28/2009	001	1
1	1	2/1/2009	3/28/2009	001	1
1	1	2/1/2009	3/28/2009	001	1
1	1	2/1/2009	3/28/2009	001	1
1	1	2/1/2009	3/28/2009	001	1
1	1	2/1/2009	3/28/2009	001	1
1	1	2/1/2009	3/28/2009	001	1
1	1	2/1/2009	3/28/2009	001	1
1	1	2/1/2009	3/28/2009	001	1
1	1	2/1/2009	3/28/2009	001	1
1	1	2/1/2009	3/28/2009	001	1
1	1	2/1/2009	3/28/2009	001	1
1	1	2/1/2009	3/28/2009	001	1
1	1	2/1/2009	3/28/2009	001	1
1	1	2/1/2009	3/28/2009	001	1
1	1	2/1/2009	3/28/2009	001	1
1	1	2/1/2009	3/28/2009	001	1
1	1	2/1/2009	3/28/2009	001	1
1	1	2/1/2009	3/28/2009	001	1
1	1	2/1/2009	3/28/2009	001	1
1	1	2/1/2009	3/28/2009	001	1

1	1	2/1/2009	3/28/2009	001	1
1	1	2/1/2009	3/28/2009	001	1
1	1	2/1/2009	3/28/2009	001	1
1	1	2/1/2009	3/28/2009	001	1
1	1	2/1/2009	3/28/2009	001	1
1	1	2/1/2009	3/28/2009	001	1
1	1	2/1/2009	3/28/2009	001	1
1	1	2/1/2009	3/28/2009	001	1
1	1	2/1/2009	3/28/2009	001	1
1	1	2/1/2009	3/28/2009	001	1
1	1	2/1/2009	3/28/2009	001	1
1	1	2/1/2009	3/28/2009	001	1
1	1	2/1/2009	3/28/2009	001	1
1	1	2/1/2009	3/28/2009	001	1
1	1	2/1/2009	3/28/2009	001	1
1	1	2/1/2009	3/28/2009	001	1
1	1	2/1/2009	3/28/2009	001	1
1	1	2/1/2009	3/28/2009	001	1
1	1	2/1/2009	3/28/2009	001	1
1	1	2/1/2009	3/28/2009	001	1
1	1	2/1/2009	3/28/2009	001	1
1	1	2/1/2009	3/28/2009	001	1
1	1	2/1/2009	3/28/2009	001	1
1	1	2/1/2009	3/28/2009	001	1
1	1	2/1/2009	3/28/2009	001	1
1	1	2/1/2009	3/28/2009	001	1
1	1	2/1/2009	3/28/2009	001	1
1	1	2/1/2009	3/28/2009	001	1
1	1	2/1/2009	3/28/2009	001	1
1	1	2/1/2009	3/28/2009	001	1
1	1	2/1/2009	3/28/2009	001	1
1	1	2/1/2009	3/28/2009	001	1
1	1	2/1/2009	3/28/2009	001	1
1	1	2/1/2009	3/28/2009	001	1
1	1	2/1/2009	3/28/2009	001	1
1	1	2/1/2009	3/28/2009	001	1
1	1	2/1/2009	3/28/2009	001	1
1	1	2/1/2009	3/28/2009	001	1
1	1	2/1/2009	3/28/2009	001	1
1	1	2/1/2009	3/28/2009	001	1
1	1	2/1/2009	3/28/2009	001	1
1	1	2/1/2009	3/28/2009	001	1
1	1	2/1/2009	3/28/2009	001	1
1	1	2/1/2009	3/28/2009	001	1
1	1	2/1/2009	3/28/2009	001	1
1	1	2/1/2009	3/28/2009	001	1
1	1	2/1/2009	3/28/2009	001	1
1	1	2/1/2009	3/28/2009	001	1
1	1	2/1/2009	3/28/2009	001	1
1	1	2/1/2009	3/28/2009	001	1
1	1	2/1/2009	3/28/2009	001	1

1	1	2/1/2009	3/28/2009	001	1
1	1	2/1/2009	3/28/2009	001	1
1	1	2/1/2009	3/28/2009	001	1
1	1	2/1/2009	3/28/2009	001	1
1	1	2/1/2009	3/28/2009	001	1
1	1	2/1/2009	3/28/2009	001	1
1	1	2/1/2009	3/28/2009	001	1
1	1	2/1/2009	3/28/2009	001	1
1	1	2/1/2009	3/28/2009	001	1
1	1	2/1/2009	3/28/2009	001	1
1	1	2/1/2009	3/28/2009	001	1
1	1	2/1/2009	3/28/2009	001	1
1	1	2/1/2009	3/28/2009	001	1
1	1	2/1/2009	3/28/2009	001	1
1	1	2/1/2009	3/28/2009	001	1
1	1	2/1/2009	3/28/2009	001	1
1	1	2/1/2009	3/28/2009	001	1
1	1	2/1/2009	3/28/2009	001	1
1	1	2/1/2009	3/28/2009	001	1
1	1	2/1/2009	3/28/2009	001	1
1	1	2/1/2009	3/28/2009	001	1
1	1	2/1/2009	3/28/2009	001	1
1	1	2/1/2009	3/28/2009	001	1
1	1	2/1/2009	3/28/2009	001	1
1	1	2/1/2009	3/28/2009	001	1
1	1	2/1/2009	3/28/2009	001	1
1	1	2/1/2009	3/28/2009	001	1
1	1	2/1/2009	3/28/2009	001	1
1	1	2/1/2009	3/28/2009	001	1
1	1	2/1/2009	3/28/2009	001	1
1	1	2/1/2009	3/28/2009	001	1
1	1	2/1/2009	3/28/2009	001	1
1	1	2/1/2009	3/28/2009	001	1
1	1	2/1/2009	3/28/2009	001	1
1	1	2/1/2009	3/28/2009	001	1
1	1	2/1/2009	3/28/2009	001	1
1	1	2/1/2009	3/28/2009	001	1
1	1	2/1/2009	3/28/2009	001	1
1	1	2/1/2009	3/28/2009	001	1
1	1	2/1/2009	3/28/2009	001	1
1	1	2/1/2009	3/28/2009	001	1
1	1	2/1/2009	3/28/2009	001	1
1	1	2/1/2009	3/28/2009	001	1
1	1	2/1/2009	3/28/2009	001	1
1	1	2/1/2009	3/28/2009	001	1
1	1	2/1/2009	3/28/2009	001	1
1	1	2/1/2009	3/28/2009	001	1
1	1	2/1/2009	3/28/2009	001	1
1	1	2/1/2009	3/28/2009	001	1
1	1	2/1/2009	3/28/2009	001	1
1	1	2/1/2009	3/28/2009	001	1

1	1	2/1/2009	3/28/2009	001	1
1	1	2/1/2009	3/28/2009	001	1
1	1	2/1/2009	3/28/2009	001	1
1	1	2/1/2009	3/28/2009	001	1
1	1	2/1/2009	3/28/2009	001	1
1	1	2/1/2009	3/28/2009	001	1
1	1	2/1/2009	3/28/2009	001	1
1	1	2/1/2009	3/28/2009	001	1
1	1	2/1/2009	3/28/2009	001	1
1	1	2/1/2009	3/28/2009	001	1
1	1	2/1/2009	3/28/2009	001	1
1	1	2/1/2009	3/28/2009	001	1
1	1	2/1/2009	3/28/2009	001	1
1	1	2/1/2009	3/28/2009	001	1
1	1	2/1/2009	3/28/2009	001	1
1	1	2/1/2009	3/28/2009	001	1
1	1	2/1/2009	3/28/2009	001	1
1	1	2/1/2009	3/28/2009	001	1
1	1	2/1/2009	3/28/2009	001	1
1	1	2/1/2009	3/28/2009	001	1
1	1	2/1/2009	3/28/2009	001	1
1	1	2/1/2009	3/28/2009	001	1
1	1	2/1/2009	3/28/2009	001	1
1	1	2/1/2009	3/28/2009	001	1
1	1	2/1/2009	3/28/2009	001	1
1	1	2/1/2009	3/28/2009	001	1
1	1	2/1/2009	3/28/2009	001	1
1	1	2/1/2009	3/28/2009	001	1
1	1	2/1/2009	3/28/2009	001	1
1	1	2/1/2009	3/28/2009	001	1
1	1	2/1/2009	3/28/2009	001	1
1	1	2/1/2009	3/28/2009	001	1
1	1	2/1/2009	3/28/2009	001	1
1	1	2/1/2009	3/28/2009	001	1
1	1	2/1/2009	3/28/2009	001	1
1	1	2/1/2009	3/28/2009	001	1
1	1	2/1/2009	3/28/2009	001	1
1	1	2/1/2009	3/28/2009	001	1
1	1	2/1/2009	3/28/2009	001	1
1	1	2/1/2009	3/28/2009	001	1
1	1	2/1/2009	3/28/2009	001	1
1	1	2/1/2009	3/28/2009	001	1
1	1	2/1/2009	3/28/2009	001	1
1	1	2/1/2009	3/28/2009	001	1
1	1	2/1/2009	3/28/2009	001	1
1	1	2/1/2009	3/28/2009	001	1
1	1	2/1/2009	3/28/2009	001	1
1	1	2/1/2009	3/28/2009	001	1
1	1	2/1/2009	3/28/2009	001	1
1	1	2/1/2009	3/28/2009	001	1
1	1	2/1/2009	3/28/2009	001	1

1	1	2/1/2009	3/28/2009	001	1
1	1	2/1/2009	3/28/2009	001	1
1	1	2/1/2009	3/28/2009	001	1
1	1	2/1/2009	3/28/2009	001	1
1	1	2/1/2009	3/28/2009	001	1
1	1	2/1/2009	3/28/2009	001	1
1	1	2/1/2009	3/28/2009	001	1
1	1	2/1/2009	3/28/2009	001	1
1	1	2/1/2009	3/28/2009	001	1
1	1	2/1/2009	3/28/2009	001	1
1	1	2/1/2009	3/28/2009	001	1
1	1	2/1/2009	3/28/2009	001	1
1	1	2/1/2009	3/28/2009	001	1
1	1	2/1/2009	3/28/2009	001	1
1	1	2/1/2009	3/28/2009	001	1
1	1	2/1/2009	3/28/2009	001	1
1	1	2/1/2009	3/28/2009	001	1
1	1	2/1/2009	3/28/2009	001	1
1	1	2/1/2009	3/28/2009	001	1
1	1	2/1/2009	3/28/2009	001	1
1	1	2/1/2009	3/28/2009	001	1
1	1	2/1/2009	3/28/2009	001	1
1	1	2/1/2009	3/28/2009	001	1
1	1	2/1/2009	3/28/2009	001	1
1	1	2/1/2009	3/28/2009	001	1
1	1	2/1/2009	3/28/2009	001	1
1	1	2/1/2009	3/28/2009	001	1
1	1	2/1/2009	3/28/2009	001	1
1	1	2/1/2009	3/28/2009	001	1
1	1	2/1/2009	3/28/2009	001	1
1	1	2/1/2009	3/28/2009	001	1
1	1	2/1/2009	3/28/2009	001	1
1	1	2/1/2009	3/28/2009	001	1
1	1	2/1/2009	3/28/2009	001	1
1	1	2/1/2009	3/28/2009	001	1
1	1	2/1/2009	3/28/2009	001	1
1	1	2/1/2009	3/28/2009	001	1
1	1	2/1/2009	3/28/2009	001	1
1	1	2/1/2009	3/28/2009	001	1
1	1	2/1/2009	3/28/2009	001	1
1	1	2/1/2009	3/28/2009	001	1
1	1	2/1/2009	3/28/2009	001	1
1	1	2/1/2009	3/28/2009	001	1
1	1	2/1/2009	3/28/2009	001	1
1	1	2/1/2009	3/28/2009	001	1
1	1	2/1/2009	3/28/2009	001	1
1	1	2/1/2009	3/28/2009	001	1
1	1	2/1/2009	3/28/2009	001	1
1	1	2/1/2009	3/28/2009	001	1
1	1	2/1/2009	3/28/2009	001	1
1	1	2/1/2009	3/28/2009	001	1

1	1	2/1/2009	3/28/2009	001	1
1	1	2/1/2009	3/28/2009	001	1
1	1	2/1/2009	3/28/2009	001	1
1	1	2/1/2009	3/28/2009	001	1
1	1	2/1/2009	3/28/2009	001	1
1	1	2/1/2009	3/28/2009	001	1
1	1	2/1/2009	3/28/2009	001	1
1	1	2/1/2009	3/28/2009	001	1
1	1	2/1/2009	3/28/2009	001	1
1	1	2/1/2009	3/28/2009	001	1
1	1	2/1/2009	3/28/2009	001	1
1	1	2/1/2009	3/28/2009	001	1
1	1	2/1/2009	3/28/2009	001	1
1	1	2/1/2009	3/28/2009	001	1
1	1	2/1/2009	3/28/2009	001	1
1	1	2/1/2009	3/28/2009	001	1
1	1	2/1/2009	3/28/2009	001	1
1	1	2/1/2009	3/28/2009	001	1
1	1	2/1/2009	3/28/2009	001	1
1	1	2/1/2009	3/28/2009	001	1
1	1	2/1/2009	3/28/2009	001	1
1	1	2/1/2009	3/28/2009	001	1
1	1	2/1/2009	3/28/2009	001	1
1	1	2/1/2009	3/28/2009	001	1
1	1	2/1/2009	3/28/2009	001	1
1	1	2/1/2009	3/28/2009	001	1
1	1	2/1/2009	3/28/2009	001	1
1	1	2/1/2009	3/28/2009	001	1
1	1	2/1/2009	3/28/2009	001	1
1	1	2/1/2009	3/28/2009	001	1
1	1	2/1/2009	3/28/2009	001	1
1	1	2/1/2009	3/28/2009	001	1
1	1	2/1/2009	3/28/2009	001	1
1	1	2/1/2009	3/28/2009	001	1
1	1	2/1/2009	3/28/2009	001	1
1	1	2/1/2009	3/28/2009	001	1
1	1	2/1/2009	3/28/2009	001	1
1	1	2/1/2009	3/28/2009	001	1
1	1	2/1/2009	3/28/2009	001	1
1	1	2/1/2009	3/28/2009	001	1
1	1	2/1/2009	3/28/2009	001	1
1	1	2/1/2009	3/28/2009	001	1
1	1	2/1/2009	3/28/2009	001	1
1	1	2/1/2009	3/28/2009	001	1
1	1	2/1/2009	3/28/2009	001	1
1	1	2/1/2009	3/28/2009	001	1
1	1	2/1/2009	3/28/2009	001	1
1	1	2/1/2009	3/28/2009	001	1
1	1	2/1/2009	3/28/2009	001	1
1	1	2/1/2009	3/28/2009	001	1
1	1	2/1/2009	3/28/2009	001	1

1	1	2/1/2009	3/28/2009	001	1
1	1	2/1/2009	3/28/2009	001	1
1	1	2/1/2009	3/28/2009	001	1
1	1	2/1/2009	3/28/2009	001	1
1	1	2/1/2009	3/28/2009	001	1
1	1	2/1/2009	3/28/2009	001	1
1	1	2/1/2009	3/28/2009	001	1
1	1	2/1/2009	3/28/2009	001	1
1	1	2/1/2009	3/28/2009	001	1
1	1	2/1/2009	3/28/2009	001	1
1	1	2/1/2009	3/28/2009	001	1
1	1	2/1/2009	3/28/2009	001	1
1	1	2/1/2009	3/28/2009	001	1
1	1	2/1/2009	3/28/2009	001	1
1	1	2/1/2009	3/28/2009	001	1
1	1	2/1/2009	3/28/2009	001	1
1	1	2/1/2009	3/28/2009	001	1
1	1	2/1/2009	3/28/2009	001	1
1	1	2/1/2009	3/28/2009	001	1
1	1	2/1/2009	3/28/2009	001	1
1	1	2/1/2009	3/28/2009	001	1
1	1	2/1/2009	3/28/2009	001	1
1	1	2/1/2009	3/28/2009	001	1
1	1	2/1/2009	3/28/2009	001	1
1	1	2/1/2009	3/28/2009	001	1
1	1	2/1/2009	3/28/2009	001	1
1	1	2/1/2009	3/28/2009	001	1
1	1	2/1/2009	3/28/2009	001	1
1	1	2/1/2009	3/28/2009	001	1
1	1	2/1/2009	3/28/2009	001	1
1	1	2/1/2009	3/28/2009	001	1
1	1	2/1/2009	3/28/2009	001	1
1	1	2/1/2009	3/28/2009	001	1
1	1	2/1/2009	3/28/2009	001	1
1	1	2/1/2009	3/28/2009	001	1
1	1	2/1/2009	3/28/2009	001	1
1	1	2/1/2009	3/28/2009	001	1
1	1	2/1/2009	3/28/2009	001	1
1	1	2/1/2009	3/28/2009	001	1
1	1	2/1/2009	3/28/2009	001	1
1	1	2/1/2009	3/28/2009	001	1
1	1	2/1/2009	3/28/2009	001	1
1	1	2/1/2009	3/28/2009	001	1
1	1	2/1/2009	3/28/2009	001	1
1	1	2/1/2009	3/28/2009	001	1
1	1	2/1/2009	3/28/2009	001	1
1	1	2/1/2009	3/28/2009	001	1
1	1	2/1/2009	3/28/2009	001	1
1	1	2/1/2009	3/28/2009	001	1
1	1	2/1/2009	3/28/2009	001	1
1	1	2/1/2009	3/28/2009	001	1

1	1	2/1/2009	3/28/2009	001	1
1	1	2/1/2009	3/28/2009	001	1
1	1	2/1/2009	3/28/2009	001	1
1	1	2/1/2009	3/28/2009	001	1
1	1	2/1/2009	3/28/2009	001	1
1	1	2/1/2009	3/28/2009	001	1
1	1	2/1/2009	3/28/2009	001	1
1	1	2/1/2009	3/28/2009	001	1
1	1	2/1/2009	3/28/2009	001	1
1	1	2/1/2009	3/28/2009	001	1
1	1	2/1/2009	3/28/2009	001	1
1	1	2/1/2009	3/28/2009	001	1
1	1	2/1/2009	3/28/2009	001	1
1	1	2/1/2009	3/28/2009	001	1
1	1	2/1/2009	3/28/2009	001	1
1	1	2/1/2009	3/28/2009	001	1
1	1	2/1/2009	3/28/2009	001	1
1	1	2/1/2009	3/28/2009	001	1
1	1	2/1/2009	3/28/2009	001	1
1	1	2/1/2009	3/28/2009	001	1
1	1	2/1/2009	3/28/2009	001	1
1	1	2/1/2009	3/28/2009	001	1
1	1	2/1/2009	3/28/2009	001	1
1	1	2/1/2009	3/28/2009	001	1
1	1	2/1/2009	3/28/2009	001	1
1	1	2/1/2009	3/28/2009	001	1
1	1	2/1/2009	3/28/2009	001	1
1	1	2/1/2009	3/28/2009	001	1
1	1	2/1/2009	3/28/2009	001	1
1	1	2/1/2009	3/28/2009	001	1
1	1	2/1/2009	3/28/2009	001	1
1	1	2/1/2009	3/28/2009	001	1
1	1	2/1/2009	3/28/2009	001	1
1	1	2/1/2009	3/28/2009	001	1
1	1	2/1/2009	3/28/2009	001	1
1	1	2/1/2009	3/28/2009	001	1
1	1	2/1/2009	3/28/2009	001	1
1	1	2/1/2009	3/28/2009	001	1
1	1	2/1/2009	3/28/2009	001	1
1	1	2/1/2009	3/28/2009	001	1
1	1	2/1/2009	3/28/2009	001	1
1	1	2/1/2009	3/28/2009	001	1
1	1	2/1/2009	3/28/2009	001	1
1	1	2/1/2009	3/28/2009	001	1
1	1	2/1/2009	3/28/2009	001	1
1	1	2/1/2009	3/28/2009	001	1
1	1	2/1/2009	3/28/2009	001	1
1	1	2/1/2009	3/28/2009	001	1
1	1	2/1/2009	3/28/2009	001	1
1	1	2/1/2009	3/28/2009	001	1
1	1	2/1/2009	3/28/2009	001	1

1	1	2/1/2009	3/28/2009	001	1
1	1	2/1/2009	3/28/2009	001	1
1	1	2/1/2009	3/28/2009	001	1
1	1	2/1/2009	3/28/2009	001	1
1	1	2/1/2009	3/28/2009	001	1

nitoring Location De	e/Longitude.Latitud	titude in Deg/Min/S	/Longitude.Longitu	gitude in Deg/Min/	Limit Start Date
Effluent Gross	37.759167	+ 37 45' 33" 0	-85.892222	- 85 53' 32" 0	2/1/2009
Effluent Gross	37.759167	+ 37 45' 33" 0	-85.892222	- 85 53' 32" 0	2/1/2009
Effluent Gross	37.759167	+ 37 45' 33" 0	-85.892222	- 85 53' 32" 0	2/1/2009
Effluent Gross	37.759167	+ 37 45' 33" 0	-85.892222	- 85 53' 32" 0	2/1/2009
Effluent Gross	37.759167	+ 37 45' 33" 0	-85.892222	- 85 53' 32" 0	2/1/2009
Effluent Gross	37.759167	+ 37 45' 33" 0	-85.892222	- 85 53' 32" 0	2/1/2009
Effluent Gross	37.759167	+ 37 45' 33" 0	-85.892222	- 85 53' 32" 0	2/1/2009
Effluent Gross	37.759167	+ 37 45' 33" 0	-85.892222	- 85 53' 32" 0	2/1/2009
Effluent Gross	37.759167	+ 37 45' 33" 0	-85.892222	- 85 53' 32" 0	2/1/2009
Effluent Gross	37.759167	+ 37 45' 33" 0	-85.892222	- 85 53' 32" 0	2/1/2009
Effluent Gross	37.759167	+ 37 45' 33" 0	-85.892222	- 85 53' 32" 0	2/1/2009
Effluent Gross	37.759167	+ 37 45' 33" 0	-85.892222	- 85 53' 32" 0	2/1/2009
Effluent Gross	37.759167	+ 37 45' 33" 0	-85.892222	- 85 53' 32" 0	2/1/2009
Effluent Gross	37.759167	+ 37 45' 33" 0	-85.892222	- 85 53' 32" 0	2/1/2009
Effluent Gross	37.759167	+ 37 45' 33" 0	-85.892222	- 85 53' 32" 0	2/1/2009
Effluent Gross	37.759167	+ 37 45' 33" 0	-85.892222	- 85 53' 32" 0	2/1/2009
Effluent Gross	37.759167	+ 37 45' 33" 0	-85.892222	- 85 53' 32" 0	2/1/2009
Effluent Gross	37.759167	+ 37 45' 33" 0	-85.892222	- 85 53' 32" 0	2/1/2009
Effluent Gross	37.759167	+ 37 45' 33" 0	-85.892222	- 85 53' 32" 0	2/1/2009
Effluent Gross	37.759167	+ 37 45' 33" 0	-85.892222	- 85 53' 32" 0	2/1/2009
Effluent Gross	37.759167	+ 37 45' 33" 0	-85.892222	- 85 53' 32" 0	2/1/2009
Effluent Gross	37.759167	+ 37 45' 33" 0	-85.892222	- 85 53' 32" 0	2/1/2009
Effluent Gross	37.759167	+ 37 45' 33" 0	-85.892222	- 85 53' 32" 0	2/1/2009
Effluent Gross	37.759167	+ 37 45' 33" 0	-85.892222	- 85 53' 32" 0	2/1/2009
Effluent Gross	37.759167	+ 37 45' 33" 0	-85.892222	- 85 53' 32" 0	2/1/2009
Effluent Gross	37.759167	+ 37 45' 33" 0	-85.892222	- 85 53' 32" 0	2/1/2009
Effluent Gross	37.759167	+ 37 45' 33" 0	-85.892222	- 85 53' 32" 0	2/1/2009
Effluent Gross	37.759167	+ 37 45' 33" 0	-85.892222	- 85 53' 32" 0	2/1/2009
Effluent Gross	37.759167	+ 37 45' 33" 0	-85.892222	- 85 53' 32" 0	2/1/2009
Effluent Gross	37.759167	+ 37 45' 33" 0	-85.892222	- 85 53' 32" 0	2/1/2009
Effluent Gross	37.759167	+ 37 45' 33" 0	-85.892222	- 85 53' 32" 0	2/1/2009
Effluent Gross	37.759167	+ 37 45' 33" 0	-85.892222	- 85 53' 32" 0	2/1/2009
Effluent Gross	37.759167	+ 37 45' 33" 0	-85.892222	- 85 53' 32" 0	2/1/2009
Effluent Gross	37.759167	+ 37 45' 33" 0	-85.892222	- 85 53' 32" 0	2/1/2009
Effluent Gross	37.759167	+ 37 45' 33" 0	-85.892222	- 85 53' 32" 0	2/1/2009
Effluent Gross	37.759167	+ 37 45' 33" 0	-85.892222	- 85 53' 32" 0	2/1/2009
Effluent Gross	37.759167	+ 37 45' 33" 0	-85.892222	- 85 53' 32" 0	2/1/2009
Effluent Gross	37.759167	+ 37 45' 33" 0	-85.892222	- 85 53' 32" 0	2/1/2009
Effluent Gross	37.759167	+ 37 45' 33" 0	-85.892222	- 85 53' 32" 0	2/1/2009
Effluent Gross	37.759167	+ 37 45' 33" 0	-85.892222	- 85 53' 32" 0	2/1/2009
Effluent Gross	37.759167	+ 37 45' 33" 0	-85.892222	- 85 53' 32" 0	2/1/2009
Effluent Gross	37.759167	+ 37 45' 33" 0	-85.892222	- 85 53' 32" 0	2/1/2009
Effluent Gross	37.759167	+ 37 45' 33" 0	-85.892222	- 85 53' 32" 0	2/1/2009
Effluent Gross	37.759167	+ 37 45' 33" 0	-85.892222	- 85 53' 32" 0	2/1/2009
Effluent Gross	37.759167	+ 37 45' 33" 0	-85.892222	- 85 53' 32" 0	2/1/2009
Effluent Gross	37.759167	+ 37 45' 33" 0	-85.892222	- 85 53' 32" 0	2/1/2009
Effluent Gross	37.759167	+ 37 45' 33" 0	-85.892222	- 85 53' 32" 0	2/1/2009
Effluent Gross	37.759167	+ 37 45' 33" 0	-85.892222	- 85 53' 32" 0	2/1/2009
Effluent Gross	37.759167	+ 37 45' 33" 0	-85.892222	- 85 53' 32" 0	2/1/2009
Effluent Gross	37.759167	+ 37 45' 33" 0	-85.892222	- 85 53' 32" 0	2/1/2009

Effluent Gross	37.759167	+ 37 45' 33" 0	-85.892222	- 85 53' 32" 0	2/1/2009
Effluent Gross	37.759167	+ 37 45' 33" 0	-85.892222	- 85 53' 32" 0	2/1/2009
Effluent Gross	37.759167	+ 37 45' 33" 0	-85.892222	- 85 53' 32" 0	2/1/2009
Effluent Gross	37.759167	+ 37 45' 33" 0	-85.892222	- 85 53' 32" 0	2/1/2009
Effluent Gross	37.759167	+ 37 45' 33" 0	-85.892222	- 85 53' 32" 0	2/1/2009
Effluent Gross	37.759167	+ 37 45' 33" 0	-85.892222	- 85 53' 32" 0	2/1/2009
Effluent Gross	37.759167	+ 37 45' 33" 0	-85.892222	- 85 53' 32" 0	2/1/2009
Effluent Gross	37.759167	+ 37 45' 33" 0	-85.892222	- 85 53' 32" 0	2/1/2009
Effluent Gross	37.759167	+ 37 45' 33" 0	-85.892222	- 85 53' 32" 0	2/1/2009
Effluent Gross	37.759167	+ 37 45' 33" 0	-85.892222	- 85 53' 32" 0	2/1/2009
Effluent Gross	37.759167	+ 37 45' 33" 0	-85.892222	- 85 53' 32" 0	2/1/2009
Effluent Gross	37.759167	+ 37 45' 33" 0	-85.892222	- 85 53' 32" 0	2/1/2009
Effluent Gross	37.759167	+ 37 45' 33" 0	-85.892222	- 85 53' 32" 0	2/1/2009
Effluent Gross	37.759167	+ 37 45' 33" 0	-85.892222	- 85 53' 32" 0	2/1/2009
Effluent Gross	37.759167	+ 37 45' 33" 0	-85.892222	- 85 53' 32" 0	2/1/2009
Effluent Gross	37.759167	+ 37 45' 33" 0	-85.892222	- 85 53' 32" 0	2/1/2009
Effluent Gross	37.759167	+ 37 45' 33" 0	-85.892222	- 85 53' 32" 0	2/1/2009
Effluent Gross	37.759167	+ 37 45' 33" 0	-85.892222	- 85 53' 32" 0	2/1/2009
Effluent Gross	37.759167	+ 37 45' 33" 0	-85.892222	- 85 53' 32" 0	2/1/2009
Effluent Gross	37.759167	+ 37 45' 33" 0	-85.892222	- 85 53' 32" 0	2/1/2009
Effluent Gross	37.759167	+ 37 45' 33" 0	-85.892222	- 85 53' 32" 0	2/1/2009
Effluent Gross	37.759167	+ 37 45' 33" 0	-85.892222	- 85 53' 32" 0	2/1/2009
Effluent Gross	37.759167	+ 37 45' 33" 0	-85.892222	- 85 53' 32" 0	2/1/2009
Effluent Gross	37.759167	+ 37 45' 33" 0	-85.892222	- 85 53' 32" 0	2/1/2009
Effluent Gross	37.759167	+ 37 45' 33" 0	-85.892222	- 85 53' 32" 0	2/1/2009
Effluent Gross	37.759167	+ 37 45' 33" 0	-85.892222	- 85 53' 32" 0	2/1/2009
Effluent Gross	37.759167	+ 37 45' 33" 0	-85.892222	- 85 53' 32" 0	2/1/2009
Effluent Gross	37.759167	+ 37 45' 33" 0	-85.892222	- 85 53' 32" 0	2/1/2009
Effluent Gross	37.759167	+ 37 45' 33" 0	-85.892222	- 85 53' 32" 0	2/1/2009
Effluent Gross	37.759167	+ 37 45' 33" 0	-85.892222	- 85 53' 32" 0	2/1/2009
Effluent Gross	37.759167	+ 37 45' 33" 0	-85.892222	- 85 53' 32" 0	2/1/2009
Effluent Gross	37.759167	+ 37 45' 33" 0	-85.892222	- 85 53' 32" 0	2/1/2009
Effluent Gross	37.759167	+ 37 45' 33" 0	-85.892222	- 85 53' 32" 0	2/1/2009
Effluent Gross	37.759167	+ 37 45' 33" 0	-85.892222	- 85 53' 32" 0	2/1/2009
Effluent Gross	37.759167	+ 37 45' 33" 0	-85.892222	- 85 53' 32" 0	2/1/2009
Effluent Gross	37.759167	+ 37 45' 33" 0	-85.892222	- 85 53' 32" 0	2/1/2009
Effluent Gross	37.759167	+ 37 45' 33" 0	-85.892222	- 85 53' 32" 0	2/1/2009
Effluent Gross	37.759167	+ 37 45' 33" 0	-85.892222	- 85 53' 32" 0	2/1/2009
Effluent Gross	37.759167	+ 37 45' 33" 0	-85.892222	- 85 53' 32" 0	2/1/2009
Effluent Gross	37.759167	+ 37 45' 33" 0	-85.892222	- 85 53' 32" 0	2/1/2009
Effluent Gross	37.759167	+ 37 45' 33" 0	-85.892222	- 85 53' 32" 0	2/1/2009
Effluent Gross	37.759167	+ 37 45' 33" 0	-85.892222	- 85 53' 32" 0	2/1/2009
Effluent Gross	37.759167	+ 37 45' 33" 0	-85.892222	- 85 53' 32" 0	2/1/2009
Effluent Gross	37.759167	+ 37 45' 33" 0	-85.892222	- 85 53' 32" 0	2/1/2009
Effluent Gross	37.759167	+ 37 45' 33" 0	-85.892222	- 85 53' 32" 0	2/1/2009
Effluent Gross	37.759167	+ 37 45' 33" 0	-85.892222	- 85 53' 32" 0	2/1/2009
Effluent Gross	37.759167	+ 37 45' 33" 0	-85.892222	- 85 53' 32" 0	2/1/2009
Effluent Gross	37.759167	+ 37 45' 33" 0	-85.892222	- 85 53' 32" 0	2/1/2009
Effluent Gross	37.759167	+ 37 45' 33" 0	-85.892222	- 85 53' 32" 0	2/1/2009
Effluent Gross	37.759167	+ 37 45' 33" 0	-85.892222	- 85 53' 32" 0	2/1/2009
Effluent Gross	37.759167	+ 37 45' 33" 0	-85.892222	- 85 53' 32" 0	2/1/2009

Effluent Gross	37.759167	+ 37 45' 33" 0	-85.892222	- 85 53' 32" 0	2/1/2009
Effluent Gross	37.759167	+ 37 45' 33" 0	-85.892222	- 85 53' 32" 0	2/1/2009
Effluent Gross	37.759167	+ 37 45' 33" 0	-85.892222	- 85 53' 32" 0	2/1/2009
Effluent Gross	37.759167	+ 37 45' 33" 0	-85.892222	- 85 53' 32" 0	2/1/2009
Effluent Gross	37.759167	+ 37 45' 33" 0	-85.892222	- 85 53' 32" 0	2/1/2009
Effluent Gross	37.759167	+ 37 45' 33" 0	-85.892222	- 85 53' 32" 0	2/1/2009
Effluent Gross	37.759167	+ 37 45' 33" 0	-85.892222	- 85 53' 32" 0	2/1/2009
Effluent Gross	37.759167	+ 37 45' 33" 0	-85.892222	- 85 53' 32" 0	2/1/2009
Effluent Gross	37.759167	+ 37 45' 33" 0	-85.892222	- 85 53' 32" 0	2/1/2009
Effluent Gross	37.759167	+ 37 45' 33" 0	-85.892222	- 85 53' 32" 0	2/1/2009
Effluent Gross	37.759167	+ 37 45' 33" 0	-85.892222	- 85 53' 32" 0	2/1/2009
Effluent Gross	37.759167	+ 37 45' 33" 0	-85.892222	- 85 53' 32" 0	2/1/2009
Effluent Gross	37.759167	+ 37 45' 33" 0	-85.892222	- 85 53' 32" 0	2/1/2009
Effluent Gross	37.759167	+ 37 45' 33" 0	-85.892222	- 85 53' 32" 0	2/1/2009
Effluent Gross	37.759167	+ 37 45' 33" 0	-85.892222	- 85 53' 32" 0	2/1/2009
Effluent Gross	37.759167	+ 37 45' 33" 0	-85.892222	- 85 53' 32" 0	2/1/2009
Effluent Gross	37.759167	+ 37 45' 33" 0	-85.892222	- 85 53' 32" 0	2/1/2009
Effluent Gross	37.759167	+ 37 45' 33" 0	-85.892222	- 85 53' 32" 0	2/1/2009
Effluent Gross	37.759167	+ 37 45' 33" 0	-85.892222	- 85 53' 32" 0	2/1/2009
Effluent Gross	37.759167	+ 37 45' 33" 0	-85.892222	- 85 53' 32" 0	2/1/2009
Effluent Gross	37.759167	+ 37 45' 33" 0	-85.892222	- 85 53' 32" 0	2/1/2009
Effluent Gross	37.759167	+ 37 45' 33" 0	-85.892222	- 85 53' 32" 0	2/1/2009
Effluent Gross	37.759167	+ 37 45' 33" 0	-85.892222	- 85 53' 32" 0	2/1/2009
Effluent Gross	37.759167	+ 37 45' 33" 0	-85.892222	- 85 53' 32" 0	2/1/2009
Effluent Gross	37.759167	+ 37 45' 33" 0	-85.892222	- 85 53' 32" 0	2/1/2009
Effluent Gross	37.759167	+ 37 45' 33" 0	-85.892222	- 85 53' 32" 0	2/1/2009
Effluent Gross	37.759167	+ 37 45' 33" 0	-85.892222	- 85 53' 32" 0	2/1/2009
Effluent Gross	37.759167	+ 37 45' 33" 0	-85.892222	- 85 53' 32" 0	2/1/2009
Effluent Gross	37.759167	+ 37 45' 33" 0	-85.892222	- 85 53' 32" 0	2/1/2009
Effluent Gross	37.759167	+ 37 45' 33" 0	-85.892222	- 85 53' 32" 0	2/1/2009
Effluent Gross	37.759167	+ 37 45' 33" 0	-85.892222	- 85 53' 32" 0	2/1/2009
Effluent Gross	37.759167	+ 37 45' 33" 0	-85.892222	- 85 53' 32" 0	2/1/2009
Effluent Gross	37.759167	+ 37 45' 33" 0	-85.892222	- 85 53' 32" 0	2/1/2009
Effluent Gross	37.759167	+ 37 45' 33" 0	-85.892222	- 85 53' 32" 0	2/1/2009
Effluent Gross	37.759167	+ 37 45' 33" 0	-85.892222	- 85 53' 32" 0	2/1/2009
Effluent Gross	37.759167	+ 37 45' 33" 0	-85.892222	- 85 53' 32" 0	2/1/2009
Effluent Gross	37.759167	+ 37 45' 33" 0	-85.892222	- 85 53' 32" 0	2/1/2009
Effluent Gross	37.759167	+ 37 45' 33" 0	-85.892222	- 85 53' 32" 0	2/1/2009
Effluent Gross	37.759167	+ 37 45' 33" 0	-85.892222	- 85 53' 32" 0	2/1/2009
Effluent Gross	37.759167	+ 37 45' 33" 0	-85.892222	- 85 53' 32" 0	2/1/2009
Effluent Gross	37.759167	+ 37 45' 33" 0	-85.892222	- 85 53' 32" 0	2/1/2009
Effluent Gross	37.759167	+ 37 45' 33" 0	-85.892222	- 85 53' 32" 0	2/1/2009
Effluent Gross	37.759167	+ 37 45' 33" 0	-85.892222	- 85 53' 32" 0	2/1/2009
Effluent Gross	37.759167	+ 37 45' 33" 0	-85.892222	- 85 53' 32" 0	2/1/2009
Effluent Gross	37.759167	+ 37 45' 33" 0	-85.892222	- 85 53' 32" 0	2/1/2009
Effluent Gross	37.759167	+ 37 45' 33" 0	-85.892222	- 85 53' 32" 0	2/1/2009
Effluent Gross	37.759167	+ 37 45' 33" 0	-85.892222	- 85 53' 32" 0	2/1/2009
Effluent Gross	37.759167	+ 37 45' 33" 0	-85.892222	- 85 53' 32" 0	2/1/2009
Effluent Gross	37.759167	+ 37 45' 33" 0	-85.892222	- 85 53' 32" 0	2/1/2009
Effluent Gross	37.759167	+ 37 45' 33" 0	-85.892222	- 85 53' 32" 0	2/1/2009
Effluent Gross	37.759167	+ 37 45' 33" 0	-85.892222	- 85 53' 32" 0	2/1/2009

Effluent Gross	37.759167	+ 37 45' 33" 0	-85.892222	- 85 53' 32" 0	2/1/2009
Effluent Gross	37.759167	+ 37 45' 33" 0	-85.892222	- 85 53' 32" 0	2/1/2009
Effluent Gross	37.759167	+ 37 45' 33" 0	-85.892222	- 85 53' 32" 0	2/1/2009
Effluent Gross	37.759167	+ 37 45' 33" 0	-85.892222	- 85 53' 32" 0	2/1/2009
Effluent Gross	37.759167	+ 37 45' 33" 0	-85.892222	- 85 53' 32" 0	2/1/2009
Effluent Gross	37.759167	+ 37 45' 33" 0	-85.892222	- 85 53' 32" 0	2/1/2009
Effluent Gross	37.759167	+ 37 45' 33" 0	-85.892222	- 85 53' 32" 0	2/1/2009
Effluent Gross	37.759167	+ 37 45' 33" 0	-85.892222	- 85 53' 32" 0	2/1/2009
Effluent Gross	37.759167	+ 37 45' 33" 0	-85.892222	- 85 53' 32" 0	2/1/2009
Effluent Gross	37.759167	+ 37 45' 33" 0	-85.892222	- 85 53' 32" 0	2/1/2009
Effluent Gross	37.759167	+ 37 45' 33" 0	-85.892222	- 85 53' 32" 0	2/1/2009
Effluent Gross	37.759167	+ 37 45' 33" 0	-85.892222	- 85 53' 32" 0	2/1/2009
Effluent Gross	37.759167	+ 37 45' 33" 0	-85.892222	- 85 53' 32" 0	2/1/2009
Effluent Gross	37.759167	+ 37 45' 33" 0	-85.892222	- 85 53' 32" 0	2/1/2009
Effluent Gross	37.759167	+ 37 45' 33" 0	-85.892222	- 85 53' 32" 0	2/1/2009
Effluent Gross	37.759167	+ 37 45' 33" 0	-85.892222	- 85 53' 32" 0	2/1/2009
Effluent Gross	37.759167	+ 37 45' 33" 0	-85.892222	- 85 53' 32" 0	2/1/2009
Effluent Gross	37.759167	+ 37 45' 33" 0	-85.892222	- 85 53' 32" 0	2/1/2009
Effluent Gross	37.759167	+ 37 45' 33" 0	-85.892222	- 85 53' 32" 0	2/1/2009
Effluent Gross	37.759167	+ 37 45' 33" 0	-85.892222	- 85 53' 32" 0	2/1/2009
Effluent Gross	37.759167	+ 37 45' 33" 0	-85.892222	- 85 53' 32" 0	2/1/2009
Effluent Gross	37.759167	+ 37 45' 33" 0	-85.892222	- 85 53' 32" 0	2/1/2009
Effluent Gross	37.759167	+ 37 45' 33" 0	-85.892222	- 85 53' 32" 0	2/1/2009
Effluent Gross	37.759167	+ 37 45' 33" 0	-85.892222	- 85 53' 32" 0	2/1/2009
Effluent Gross	37.759167	+ 37 45' 33" 0	-85.892222	- 85 53' 32" 0	2/1/2009
Effluent Gross	37.759167	+ 37 45' 33" 0	-85.892222	- 85 53' 32" 0	2/1/2009
Effluent Gross	37.759167	+ 37 45' 33" 0	-85.892222	- 85 53' 32" 0	2/1/2009
Effluent Gross	37.759167	+ 37 45' 33" 0	-85.892222	- 85 53' 32" 0	2/1/2009
Effluent Gross	37.759167	+ 37 45' 33" 0	-85.892222	- 85 53' 32" 0	2/1/2009
Effluent Gross	37.759167	+ 37 45' 33" 0	-85.892222	- 85 53' 32" 0	2/1/2009
Effluent Gross	37.759167	+ 37 45' 33" 0	-85.892222	- 85 53' 32" 0	2/1/2009
Effluent Gross	37.759167	+ 37 45' 33" 0	-85.892222	- 85 53' 32" 0	2/1/2009
Effluent Gross	37.759167	+ 37 45' 33" 0	-85.892222	- 85 53' 32" 0	2/1/2009
Effluent Gross	37.759167	+ 37 45' 33" 0	-85.892222	- 85 53' 32" 0	2/1/2009
Effluent Gross	37.759167	+ 37 45' 33" 0	-85.892222	- 85 53' 32" 0	2/1/2009
Effluent Gross	37.759167	+ 37 45' 33" 0	-85.892222	- 85 53' 32" 0	2/1/2009
Effluent Gross	37.759167	+ 37 45' 33" 0	-85.892222	- 85 53' 32" 0	2/1/2009
Effluent Gross	37.759167	+ 37 45' 33" 0	-85.892222	- 85 53' 32" 0	2/1/2009
Effluent Gross	37.759167	+ 37 45' 33" 0	-85.892222	- 85 53' 32" 0	2/1/2009
Effluent Gross	37.759167	+ 37 45' 33" 0	-85.892222	- 85 53' 32" 0	2/1/2009
Effluent Gross	37.759167	+ 37 45' 33" 0	-85.892222	- 85 53' 32" 0	2/1/2009
Effluent Gross	37.759167	+ 37 45' 33" 0	-85.892222	- 85 53' 32" 0	2/1/2009
Effluent Gross	37.759167	+ 37 45' 33" 0	-85.892222	- 85 53' 32" 0	2/1/2009
Effluent Gross	37.759167	+ 37 45' 33" 0	-85.892222	- 85 53' 32" 0	2/1/2009
Effluent Gross	37.759167	+ 37 45' 33" 0	-85.892222	- 85 53' 32" 0	2/1/2009
Effluent Gross	37.759167	+ 37 45' 33" 0	-85.892222	- 85 53' 32" 0	2/1/2009
Effluent Gross	37.759167	+ 37 45' 33" 0	-85.892222	- 85 53' 32" 0	2/1/2009
Effluent Gross	37.759167	+ 37 45' 33" 0	-85.892222	- 85 53' 32" 0	2/1/2009
Effluent Gross	37.759167	+ 37 45' 33" 0	-85.892222	- 85 53' 32" 0	2/1/2009
Effluent Gross	37.759167	+ 37 45' 33" 0	-85.892222	- 85 53' 32" 0	2/1/2009
Effluent Gross	37.759167	+ 37 45' 33" 0	-85.892222	- 85 53' 32" 0	2/1/2009

Effluent Gross	37.759167	+ 37 45' 33" 0	-85.892222	- 85 53' 32" 0	2/1/2009
Effluent Gross	37.759167	+ 37 45' 33" 0	-85.892222	- 85 53' 32" 0	2/1/2009
Effluent Gross	37.759167	+ 37 45' 33" 0	-85.892222	- 85 53' 32" 0	2/1/2009
Effluent Gross	37.759167	+ 37 45' 33" 0	-85.892222	- 85 53' 32" 0	2/1/2009
Effluent Gross	37.759167	+ 37 45' 33" 0	-85.892222	- 85 53' 32" 0	2/1/2009
Effluent Gross	37.759167	+ 37 45' 33" 0	-85.892222	- 85 53' 32" 0	2/1/2009
Effluent Gross	37.759167	+ 37 45' 33" 0	-85.892222	- 85 53' 32" 0	2/1/2009
Effluent Gross	37.759167	+ 37 45' 33" 0	-85.892222	- 85 53' 32" 0	2/1/2009
Effluent Gross	37.759167	+ 37 45' 33" 0	-85.892222	- 85 53' 32" 0	2/1/2009
Effluent Gross	37.759167	+ 37 45' 33" 0	-85.892222	- 85 53' 32" 0	2/1/2009
Effluent Gross	37.759167	+ 37 45' 33" 0	-85.892222	- 85 53' 32" 0	2/1/2009
Effluent Gross	37.759167	+ 37 45' 33" 0	-85.892222	- 85 53' 32" 0	2/1/2009
Effluent Gross	37.759167	+ 37 45' 33" 0	-85.892222	- 85 53' 32" 0	2/1/2009
Effluent Gross	37.759167	+ 37 45' 33" 0	-85.892222	- 85 53' 32" 0	2/1/2009
Effluent Gross	37.759167	+ 37 45' 33" 0	-85.892222	- 85 53' 32" 0	2/1/2009
Effluent Gross	37.759167	+ 37 45' 33" 0	-85.892222	- 85 53' 32" 0	2/1/2009
Effluent Gross	37.759167	+ 37 45' 33" 0	-85.892222	- 85 53' 32" 0	2/1/2009
Effluent Gross	37.759167	+ 37 45' 33" 0	-85.892222	- 85 53' 32" 0	2/1/2009
Effluent Gross	37.759167	+ 37 45' 33" 0	-85.892222	- 85 53' 32" 0	2/1/2009
Effluent Gross	37.759167	+ 37 45' 33" 0	-85.892222	- 85 53' 32" 0	2/1/2009
Effluent Gross	37.759167	+ 37 45' 33" 0	-85.892222	- 85 53' 32" 0	2/1/2009
Effluent Gross	37.759167	+ 37 45' 33" 0	-85.892222	- 85 53' 32" 0	2/1/2009
Effluent Gross	37.759167	+ 37 45' 33" 0	-85.892222	- 85 53' 32" 0	2/1/2009
Effluent Gross	37.759167	+ 37 45' 33" 0	-85.892222	- 85 53' 32" 0	2/1/2009
Effluent Gross	37.759167	+ 37 45' 33" 0	-85.892222	- 85 53' 32" 0	2/1/2009
Effluent Gross	37.759167	+ 37 45' 33" 0	-85.892222	- 85 53' 32" 0	2/1/2009
Effluent Gross	37.759167	+ 37 45' 33" 0	-85.892222	- 85 53' 32" 0	2/1/2009
Effluent Gross	37.759167	+ 37 45' 33" 0	-85.892222	- 85 53' 32" 0	2/1/2009
Effluent Gross	37.759167	+ 37 45' 33" 0	-85.892222	- 85 53' 32" 0	2/1/2009
Effluent Gross	37.759167	+ 37 45' 33" 0	-85.892222	- 85 53' 32" 0	2/1/2009
Effluent Gross	37.759167	+ 37 45' 33" 0	-85.892222	- 85 53' 32" 0	2/1/2009
Effluent Gross	37.759167	+ 37 45' 33" 0	-85.892222	- 85 53' 32" 0	2/1/2009
Effluent Gross	37.759167	+ 37 45' 33" 0	-85.892222	- 85 53' 32" 0	2/1/2009
Effluent Gross	37.759167	+ 37 45' 33" 0	-85.892222	- 85 53' 32" 0	2/1/2009
Effluent Gross	37.759167	+ 37 45' 33" 0	-85.892222	- 85 53' 32" 0	2/1/2009
Effluent Gross	37.759167	+ 37 45' 33" 0	-85.892222	- 85 53' 32" 0	2/1/2009
Effluent Gross	37.759167	+ 37 45' 33" 0	-85.892222	- 85 53' 32" 0	2/1/2009
Effluent Gross	37.759167	+ 37 45' 33" 0	-85.892222	- 85 53' 32" 0	2/1/2009
Effluent Gross	37.759167	+ 37 45' 33" 0	-85.892222	- 85 53' 32" 0	2/1/2009
Effluent Gross	37.759167	+ 37 45' 33" 0	-85.892222	- 85 53' 32" 0	2/1/2009
Effluent Gross	37.759167	+ 37 45' 33" 0	-85.892222	- 85 53' 32" 0	2/1/2009
Effluent Gross	37.759167	+ 37 45' 33" 0	-85.892222	- 85 53' 32" 0	2/1/2009
Effluent Gross	37.759167	+ 37 45' 33" 0	-85.892222	- 85 53' 32" 0	2/1/2009
Effluent Gross	37.759167	+ 37 45' 33" 0	-85.892222	- 85 53' 32" 0	2/1/2009
Effluent Gross	37.759167	+ 37 45' 33" 0	-85.892222	- 85 53' 32" 0	2/1/2009
Effluent Gross	37.759167	+ 37 45' 33" 0	-85.892222	- 85 53' 32" 0	2/1/2009
Effluent Gross	37.759167	+ 37 45' 33" 0	-85.892222	- 85 53' 32" 0	2/1/2009
Effluent Gross	37.759167	+ 37 45' 33" 0	-85.892222	- 85 53' 32" 0	2/1/2009
Effluent Gross	37.759167	+ 37 45' 33" 0	-85.892222	- 85 53' 32" 0	2/1/2009
Effluent Gross	37.759167	+ 37 45' 33" 0	-85.892222	- 85 53' 32" 0	2/1/2009
Effluent Gross	37.759167	+ 37 45' 33" 0	-85.892222	- 85 53' 32" 0	2/1/2009

Effluent Gross	37.759167	+ 37 45' 33" 0	-85.892222	- 85 53' 32" 0	2/1/2009
Effluent Gross	37.759167	+ 37 45' 33" 0	-85.892222	- 85 53' 32" 0	2/1/2009
Effluent Gross	37.759167	+ 37 45' 33" 0	-85.892222	- 85 53' 32" 0	2/1/2009
Effluent Gross	37.759167	+ 37 45' 33" 0	-85.892222	- 85 53' 32" 0	2/1/2009
Effluent Gross	37.759167	+ 37 45' 33" 0	-85.892222	- 85 53' 32" 0	2/1/2009
Effluent Gross	37.759167	+ 37 45' 33" 0	-85.892222	- 85 53' 32" 0	2/1/2009
Effluent Gross	37.759167	+ 37 45' 33" 0	-85.892222	- 85 53' 32" 0	2/1/2009
Effluent Gross	37.759167	+ 37 45' 33" 0	-85.892222	- 85 53' 32" 0	2/1/2009
Effluent Gross	37.759167	+ 37 45' 33" 0	-85.892222	- 85 53' 32" 0	2/1/2009
Effluent Gross	37.759167	+ 37 45' 33" 0	-85.892222	- 85 53' 32" 0	2/1/2009
Effluent Gross	37.759167	+ 37 45' 33" 0	-85.892222	- 85 53' 32" 0	2/1/2009
Effluent Gross	37.759167	+ 37 45' 33" 0	-85.892222	- 85 53' 32" 0	2/1/2009
Effluent Gross	37.759167	+ 37 45' 33" 0	-85.892222	- 85 53' 32" 0	2/1/2009
Effluent Gross	37.759167	+ 37 45' 33" 0	-85.892222	- 85 53' 32" 0	2/1/2009
Effluent Gross	37.759167	+ 37 45' 33" 0	-85.892222	- 85 53' 32" 0	2/1/2009
Effluent Gross	37.759167	+ 37 45' 33" 0	-85.892222	- 85 53' 32" 0	2/1/2009
Effluent Gross	37.759167	+ 37 45' 33" 0	-85.892222	- 85 53' 32" 0	2/1/2009
Effluent Gross	37.759167	+ 37 45' 33" 0	-85.892222	- 85 53' 32" 0	2/1/2009
Effluent Gross	37.759167	+ 37 45' 33" 0	-85.892222	- 85 53' 32" 0	2/1/2009
Effluent Gross	37.759167	+ 37 45' 33" 0	-85.892222	- 85 53' 32" 0	2/1/2009
Effluent Gross	37.759167	+ 37 45' 33" 0	-85.892222	- 85 53' 32" 0	2/1/2009
Effluent Gross	37.759167	+ 37 45' 33" 0	-85.892222	- 85 53' 32" 0	2/1/2009
Effluent Gross	37.759167	+ 37 45' 33" 0	-85.892222	- 85 53' 32" 0	2/1/2009
Effluent Gross	37.759167	+ 37 45' 33" 0	-85.892222	- 85 53' 32" 0	2/1/2009
Effluent Gross	37.759167	+ 37 45' 33" 0	-85.892222	- 85 53' 32" 0	2/1/2009
Effluent Gross	37.759167	+ 37 45' 33" 0	-85.892222	- 85 53' 32" 0	2/1/2009
Effluent Gross	37.759167	+ 37 45' 33" 0	-85.892222	- 85 53' 32" 0	2/1/2009
Effluent Gross	37.759167	+ 37 45' 33" 0	-85.892222	- 85 53' 32" 0	2/1/2009
Effluent Gross	37.759167	+ 37 45' 33" 0	-85.892222	- 85 53' 32" 0	2/1/2009
Effluent Gross	37.759167	+ 37 45' 33" 0	-85.892222	- 85 53' 32" 0	2/1/2009
Effluent Gross	37.759167	+ 37 45' 33" 0	-85.892222	- 85 53' 32" 0	2/1/2009
Effluent Gross	37.759167	+ 37 45' 33" 0	-85.892222	- 85 53' 32" 0	2/1/2009
Effluent Gross	37.759167	+ 37 45' 33" 0	-85.892222	- 85 53' 32" 0	2/1/2009
Effluent Gross	37.759167	+ 37 45' 33" 0	-85.892222	- 85 53' 32" 0	2/1/2009
Effluent Gross	37.759167	+ 37 45' 33" 0	-85.892222	- 85 53' 32" 0	2/1/2009
Effluent Gross	37.759167	+ 37 45' 33" 0	-85.892222	- 85 53' 32" 0	2/1/2009
Effluent Gross	37.759167	+ 37 45' 33" 0	-85.892222	- 85 53' 32" 0	2/1/2009
Effluent Gross	37.759167	+ 37 45' 33" 0	-85.892222	- 85 53' 32" 0	2/1/2009
Effluent Gross	37.759167	+ 37 45' 33" 0	-85.892222	- 85 53' 32" 0	2/1/2009
Effluent Gross	37.759167	+ 37 45' 33" 0	-85.892222	- 85 53' 32" 0	2/1/2009
Effluent Gross	37.759167	+ 37 45' 33" 0	-85.892222	- 85 53' 32" 0	2/1/2009
Effluent Gross	37.759167	+ 37 45' 33" 0	-85.892222	- 85 53' 32" 0	2/1/2009
Effluent Gross	37.759167	+ 37 45' 33" 0	-85.892222	- 85 53' 32" 0	2/1/2009
Effluent Gross	37.759167	+ 37 45' 33" 0	-85.892222	- 85 53' 32" 0	2/1/2009
Effluent Gross	37.759167	+ 37 45' 33" 0	-85.892222	- 85 53' 32" 0	2/1/2009
Effluent Gross	37.759167	+ 37 45' 33" 0	-85.892222	- 85 53' 32" 0	2/1/2009
Effluent Gross	37.759167	+ 37 45' 33" 0	-85.892222	- 85 53' 32" 0	2/1/2009
Effluent Gross	37.759167	+ 37 45' 33" 0	-85.892222	- 85 53' 32" 0	2/1/2009
Effluent Gross	37.759167	+ 37 45' 33" 0	-85.892222	- 85 53' 32" 0	2/1/2009
Effluent Gross	37.759167	+ 37 45' 33" 0	-85.892222	- 85 53' 32" 0	2/1/2009
Effluent Gross	37.759167	+ 37 45' 33" 0	-85.892222	- 85 53' 32" 0	2/1/2009

Effluent Gross	37.759167	+ 37 45' 33" 0	-85.892222	- 85 53' 32" 0	2/1/2009
Effluent Gross	37.759167	+ 37 45' 33" 0	-85.892222	- 85 53' 32" 0	2/1/2009
Effluent Gross	37.759167	+ 37 45' 33" 0	-85.892222	- 85 53' 32" 0	2/1/2009
Effluent Gross	37.759167	+ 37 45' 33" 0	-85.892222	- 85 53' 32" 0	2/1/2009
Effluent Gross	37.759167	+ 37 45' 33" 0	-85.892222	- 85 53' 32" 0	2/1/2009
Effluent Gross	37.759167	+ 37 45' 33" 0	-85.892222	- 85 53' 32" 0	2/1/2009
Effluent Gross	37.759167	+ 37 45' 33" 0	-85.892222	- 85 53' 32" 0	2/1/2009
Effluent Gross	37.759167	+ 37 45' 33" 0	-85.892222	- 85 53' 32" 0	2/1/2009
Effluent Gross	37.759167	+ 37 45' 33" 0	-85.892222	- 85 53' 32" 0	2/1/2009
Effluent Gross	37.759167	+ 37 45' 33" 0	-85.892222	- 85 53' 32" 0	2/1/2009
Effluent Gross	37.759167	+ 37 45' 33" 0	-85.892222	- 85 53' 32" 0	2/1/2009
Effluent Gross	37.759167	+ 37 45' 33" 0	-85.892222	- 85 53' 32" 0	2/1/2009
Effluent Gross	37.759167	+ 37 45' 33" 0	-85.892222	- 85 53' 32" 0	2/1/2009
Effluent Gross	37.759167	+ 37 45' 33" 0	-85.892222	- 85 53' 32" 0	2/1/2009
Effluent Gross	37.759167	+ 37 45' 33" 0	-85.892222	- 85 53' 32" 0	2/1/2009
Effluent Gross	37.759167	+ 37 45' 33" 0	-85.892222	- 85 53' 32" 0	2/1/2009
Effluent Gross	37.759167	+ 37 45' 33" 0	-85.892222	- 85 53' 32" 0	2/1/2009
Effluent Gross	37.759167	+ 37 45' 33" 0	-85.892222	- 85 53' 32" 0	2/1/2009
Effluent Gross	37.759167	+ 37 45' 33" 0	-85.892222	- 85 53' 32" 0	2/1/2009
Effluent Gross	37.759167	+ 37 45' 33" 0	-85.892222	- 85 53' 32" 0	2/1/2009
Effluent Gross	37.759167	+ 37 45' 33" 0	-85.892222	- 85 53' 32" 0	2/1/2009
Effluent Gross	37.759167	+ 37 45' 33" 0	-85.892222	- 85 53' 32" 0	2/1/2009
Effluent Gross	37.759167	+ 37 45' 33" 0	-85.892222	- 85 53' 32" 0	2/1/2009
Effluent Gross	37.759167	+ 37 45' 33" 0	-85.892222	- 85 53' 32" 0	2/1/2009
Effluent Gross	37.759167	+ 37 45' 33" 0	-85.892222	- 85 53' 32" 0	2/1/2009
Effluent Gross	37.759167	+ 37 45' 33" 0	-85.892222	- 85 53' 32" 0	2/1/2009
Effluent Gross	37.759167	+ 37 45' 33" 0	-85.892222	- 85 53' 32" 0	2/1/2009
Effluent Gross	37.759167	+ 37 45' 33" 0	-85.892222	- 85 53' 32" 0	2/1/2009
Effluent Gross	37.759167	+ 37 45' 33" 0	-85.892222	- 85 53' 32" 0	2/1/2009
Effluent Gross	37.759167	+ 37 45' 33" 0	-85.892222	- 85 53' 32" 0	2/1/2009
Effluent Gross	37.759167	+ 37 45' 33" 0	-85.892222	- 85 53' 32" 0	2/1/2009
Effluent Gross	37.759167	+ 37 45' 33" 0	-85.892222	- 85 53' 32" 0	2/1/2009
Effluent Gross	37.759167	+ 37 45' 33" 0	-85.892222	- 85 53' 32" 0	2/1/2009
Effluent Gross	37.759167	+ 37 45' 33" 0	-85.892222	- 85 53' 32" 0	2/1/2009
Effluent Gross	37.759167	+ 37 45' 33" 0	-85.892222	- 85 53' 32" 0	2/1/2009
Effluent Gross	37.759167	+ 37 45' 33" 0	-85.892222	- 85 53' 32" 0	2/1/2009
Effluent Gross	37.759167	+ 37 45' 33" 0	-85.892222	- 85 53' 32" 0	2/1/2009
Effluent Gross	37.759167	+ 37 45' 33" 0	-85.892222	- 85 53' 32" 0	2/1/2009
Effluent Gross	37.759167	+ 37 45' 33" 0	-85.892222	- 85 53' 32" 0	2/1/2009
Effluent Gross	37.759167	+ 37 45' 33" 0	-85.892222	- 85 53' 32" 0	2/1/2009
Effluent Gross	37.759167	+ 37 45' 33" 0	-85.892222	- 85 53' 32" 0	2/1/2009
Effluent Gross	37.759167	+ 37 45' 33" 0	-85.892222	- 85 53' 32" 0	2/1/2009
Effluent Gross	37.759167	+ 37 45' 33" 0	-85.892222	- 85 53' 32" 0	2/1/2009
Effluent Gross	37.759167	+ 37 45' 33" 0	-85.892222	- 85 53' 32" 0	2/1/2009
Effluent Gross	37.759167	+ 37 45' 33" 0	-85.892222	- 85 53' 32" 0	2/1/2009
Effluent Gross	37.759167	+ 37 45' 33" 0	-85.892222	- 85 53' 32" 0	2/1/2009
Effluent Gross	37.759167	+ 37 45' 33" 0	-85.892222	- 85 53' 32" 0	2/1/2009
Effluent Gross	37.759167	+ 37 45' 33" 0	-85.892222	- 85 53' 32" 0	2/1/2009
Effluent Gross	37.759167	+ 37 45' 33" 0	-85.892222	- 85 53' 32" 0	2/1/2009
Effluent Gross	37.759167	+ 37 45' 33" 0	-85.892222	- 85 53' 32" 0	2/1/2009
Effluent Gross	37.759167	+ 37 45' 33" 0	-85.892222	- 85 53' 32" 0	2/1/2009

Effluent Gross	37.759167	+ 37 45' 33" 0	-85.892222	- 85 53' 32" 0	2/1/2009
Effluent Gross	37.759167	+ 37 45' 33" 0	-85.892222	- 85 53' 32" 0	2/1/2009
Effluent Gross	37.759167	+ 37 45' 33" 0	-85.892222	- 85 53' 32" 0	2/1/2009
Effluent Gross	37.759167	+ 37 45' 33" 0	-85.892222	- 85 53' 32" 0	2/1/2009
Effluent Gross	37.759167	+ 37 45' 33" 0	-85.892222	- 85 53' 32" 0	2/1/2009
Effluent Gross	37.759167	+ 37 45' 33" 0	-85.892222	- 85 53' 32" 0	2/1/2009
Effluent Gross	37.759167	+ 37 45' 33" 0	-85.892222	- 85 53' 32" 0	2/1/2009
Effluent Gross	37.759167	+ 37 45' 33" 0	-85.892222	- 85 53' 32" 0	2/1/2009
Effluent Gross	37.759167	+ 37 45' 33" 0	-85.892222	- 85 53' 32" 0	2/1/2009
Effluent Gross	37.759167	+ 37 45' 33" 0	-85.892222	- 85 53' 32" 0	2/1/2009
Effluent Gross	37.759167	+ 37 45' 33" 0	-85.892222	- 85 53' 32" 0	2/1/2009
Effluent Gross	37.759167	+ 37 45' 33" 0	-85.892222	- 85 53' 32" 0	2/1/2009
Effluent Gross	37.759167	+ 37 45' 33" 0	-85.892222	- 85 53' 32" 0	2/1/2009
Effluent Gross	37.759167	+ 37 45' 33" 0	-85.892222	- 85 53' 32" 0	2/1/2009
Effluent Gross	37.759167	+ 37 45' 33" 0	-85.892222	- 85 53' 32" 0	2/1/2009
Effluent Gross	37.759167	+ 37 45' 33" 0	-85.892222	- 85 53' 32" 0	2/1/2009
Effluent Gross	37.759167	+ 37 45' 33" 0	-85.892222	- 85 53' 32" 0	2/1/2009
Effluent Gross	37.759167	+ 37 45' 33" 0	-85.892222	- 85 53' 32" 0	2/1/2009
Effluent Gross	37.759167	+ 37 45' 33" 0	-85.892222	- 85 53' 32" 0	2/1/2009
Effluent Gross	37.759167	+ 37 45' 33" 0	-85.892222	- 85 53' 32" 0	2/1/2009
Effluent Gross	37.759167	+ 37 45' 33" 0	-85.892222	- 85 53' 32" 0	2/1/2009
Effluent Gross	37.759167	+ 37 45' 33" 0	-85.892222	- 85 53' 32" 0	2/1/2009
Effluent Gross	37.759167	+ 37 45' 33" 0	-85.892222	- 85 53' 32" 0	2/1/2009
Effluent Gross	37.759167	+ 37 45' 33" 0	-85.892222	- 85 53' 32" 0	2/1/2009
Effluent Gross	37.759167	+ 37 45' 33" 0	-85.892222	- 85 53' 32" 0	2/1/2009
Effluent Gross	37.759167	+ 37 45' 33" 0	-85.892222	- 85 53' 32" 0	2/1/2009
Effluent Gross	37.759167	+ 37 45' 33" 0	-85.892222	- 85 53' 32" 0	2/1/2009
Effluent Gross	37.759167	+ 37 45' 33" 0	-85.892222	- 85 53' 32" 0	2/1/2009
Effluent Gross	37.759167	+ 37 45' 33" 0	-85.892222	- 85 53' 32" 0	2/1/2009
Effluent Gross	37.759167	+ 37 45' 33" 0	-85.892222	- 85 53' 32" 0	2/1/2009
Effluent Gross	37.759167	+ 37 45' 33" 0	-85.892222	- 85 53' 32" 0	2/1/2009
Effluent Gross	37.759167	+ 37 45' 33" 0	-85.892222	- 85 53' 32" 0	2/1/2009
Effluent Gross	37.759167	+ 37 45' 33" 0	-85.892222	- 85 53' 32" 0	2/1/2009
Effluent Gross	37.759167	+ 37 45' 33" 0	-85.892222	- 85 53' 32" 0	2/1/2009
Effluent Gross	37.759167	+ 37 45' 33" 0	-85.892222	- 85 53' 32" 0	2/1/2009
Effluent Gross	37.759167	+ 37 45' 33" 0	-85.892222	- 85 53' 32" 0	2/1/2009
Effluent Gross	37.759167	+ 37 45' 33" 0	-85.892222	- 85 53' 32" 0	2/1/2009
Effluent Gross	37.759167	+ 37 45' 33" 0	-85.892222	- 85 53' 32" 0	2/1/2009
Effluent Gross	37.759167	+ 37 45' 33" 0	-85.892222	- 85 53' 32" 0	2/1/2009
Effluent Gross	37.759167	+ 37 45' 33" 0	-85.892222	- 85 53' 32" 0	2/1/2009
Effluent Gross	37.759167	+ 37 45' 33" 0	-85.892222	- 85 53' 32" 0	2/1/2009
Effluent Gross	37.759167	+ 37 45' 33" 0	-85.892222	- 85 53' 32" 0	2/1/2009
Effluent Gross	37.759167	+ 37 45' 33" 0	-85.892222	- 85 53' 32" 0	2/1/2009
Effluent Gross	37.759167	+ 37 45' 33" 0	-85.892222	- 85 53' 32" 0	2/1/2009
Effluent Gross	37.759167	+ 37 45' 33" 0	-85.892222	- 85 53' 32" 0	2/1/2009
Effluent Gross	37.759167	+ 37 45' 33" 0	-85.892222	- 85 53' 32" 0	2/1/2009
Effluent Gross	37.759167	+ 37 45' 33" 0	-85.892222	- 85 53' 32" 0	2/1/2009
Effluent Gross	37.759167	+ 37 45' 33" 0	-85.892222	- 85 53' 32" 0	2/1/2009
Effluent Gross	37.759167	+ 37 45' 33" 0	-85.892222	- 85 53' 32" 0	2/1/2009
Effluent Gross	37.759167	+ 37 45' 33" 0	-85.892222	- 85 53' 32" 0	2/1/2009
Effluent Gross	37.759167	+ 37 45' 33" 0	-85.892222	- 85 53' 32" 0	2/1/2009

Effluent Gross	37.759167	+ 37 45' 33" 0	-85.892222	- 85 53' 32" 0	2/1/2009
Effluent Gross	37.759167	+ 37 45' 33" 0	-85.892222	- 85 53' 32" 0	2/1/2009
Effluent Gross	37.759167	+ 37 45' 33" 0	-85.892222	- 85 53' 32" 0	2/1/2009
Effluent Gross	37.759167	+ 37 45' 33" 0	-85.892222	- 85 53' 32" 0	2/1/2009
Effluent Gross	37.759167	+ 37 45' 33" 0	-85.892222	- 85 53' 32" 0	2/1/2009
Effluent Gross	37.759167	+ 37 45' 33" 0	-85.892222	- 85 53' 32" 0	2/1/2009
Effluent Gross	37.759167	+ 37 45' 33" 0	-85.892222	- 85 53' 32" 0	2/1/2009
Effluent Gross	37.759167	+ 37 45' 33" 0	-85.892222	- 85 53' 32" 0	2/1/2009
Effluent Gross	37.759167	+ 37 45' 33" 0	-85.892222	- 85 53' 32" 0	2/1/2009
Effluent Gross	37.759167	+ 37 45' 33" 0	-85.892222	- 85 53' 32" 0	2/1/2009
Effluent Gross	37.759167	+ 37 45' 33" 0	-85.892222	- 85 53' 32" 0	2/1/2009
Effluent Gross	37.759167	+ 37 45' 33" 0	-85.892222	- 85 53' 32" 0	2/1/2009
Effluent Gross	37.759167	+ 37 45' 33" 0	-85.892222	- 85 53' 32" 0	2/1/2009
Effluent Gross	37.759167	+ 37 45' 33" 0	-85.892222	- 85 53' 32" 0	2/1/2009
Effluent Gross	37.759167	+ 37 45' 33" 0	-85.892222	- 85 53' 32" 0	2/1/2009
Effluent Gross	37.759167	+ 37 45' 33" 0	-85.892222	- 85 53' 32" 0	2/1/2009
Effluent Gross	37.759167	+ 37 45' 33" 0	-85.892222	- 85 53' 32" 0	2/1/2009
Effluent Gross	37.759167	+ 37 45' 33" 0	-85.892222	- 85 53' 32" 0	2/1/2009
Effluent Gross	37.759167	+ 37 45' 33" 0	-85.892222	- 85 53' 32" 0	2/1/2009
Effluent Gross	37.759167	+ 37 45' 33" 0	-85.892222	- 85 53' 32" 0	2/1/2009
Effluent Gross	37.759167	+ 37 45' 33" 0	-85.892222	- 85 53' 32" 0	2/1/2009
Effluent Gross	37.759167	+ 37 45' 33" 0	-85.892222	- 85 53' 32" 0	2/1/2009
Effluent Gross	37.759167	+ 37 45' 33" 0	-85.892222	- 85 53' 32" 0	2/1/2009
Effluent Gross	37.759167	+ 37 45' 33" 0	-85.892222	- 85 53' 32" 0	2/1/2009
Effluent Gross	37.759167	+ 37 45' 33" 0	-85.892222	- 85 53' 32" 0	2/1/2009
Effluent Gross	37.759167	+ 37 45' 33" 0	-85.892222	- 85 53' 32" 0	2/1/2009
Effluent Gross	37.759167	+ 37 45' 33" 0	-85.892222	- 85 53' 32" 0	2/1/2009
Effluent Gross	37.759167	+ 37 45' 33" 0	-85.892222	- 85 53' 32" 0	2/1/2009
Effluent Gross	37.759167	+ 37 45' 33" 0	-85.892222	- 85 53' 32" 0	2/1/2009
Effluent Gross	37.759167	+ 37 45' 33" 0	-85.892222	- 85 53' 32" 0	2/1/2009
Effluent Gross	37.759167	+ 37 45' 33" 0	-85.892222	- 85 53' 32" 0	2/1/2009
Effluent Gross	37.759167	+ 37 45' 33" 0	-85.892222	- 85 53' 32" 0	2/1/2009
Effluent Gross	37.759167	+ 37 45' 33" 0	-85.892222	- 85 53' 32" 0	2/1/2009
Effluent Gross	37.759167	+ 37 45' 33" 0	-85.892222	- 85 53' 32" 0	2/1/2009
Effluent Gross	37.759167	+ 37 45' 33" 0	-85.892222	- 85 53' 32" 0	2/1/2009
Effluent Gross	37.759167	+ 37 45' 33" 0	-85.892222	- 85 53' 32" 0	2/1/2009
Effluent Gross	37.759167	+ 37 45' 33" 0	-85.892222	- 85 53' 32" 0	2/1/2009
Effluent Gross	37.759167	+ 37 45' 33" 0	-85.892222	- 85 53' 32" 0	2/1/2009
Effluent Gross	37.759167	+ 37 45' 33" 0	-85.892222	- 85 53' 32" 0	2/1/2009
Effluent Gross	37.759167	+ 37 45' 33" 0	-85.892222	- 85 53' 32" 0	2/1/2009
Effluent Gross	37.759167	+ 37 45' 33" 0	-85.892222	- 85 53' 32" 0	2/1/2009
Effluent Gross	37.759167	+ 37 45' 33" 0	-85.892222	- 85 53' 32" 0	2/1/2009
Effluent Gross	37.759167	+ 37 45' 33" 0	-85.892222	- 85 53' 32" 0	2/1/2009
Effluent Gross	37.759167	+ 37 45' 33" 0	-85.892222	- 85 53' 32" 0	2/1/2009
Effluent Gross	37.759167	+ 37 45' 33" 0	-85.892222	- 85 53' 32" 0	2/1/2009
Effluent Gross	37.759167	+ 37 45' 33" 0	-85.892222	- 85 53' 32" 0	2/1/2009
Effluent Gross	37.759167	+ 37 45' 33" 0	-85.892222	- 85 53' 32" 0	2/1/2009
Effluent Gross	37.759167	+ 37 45' 33" 0	-85.892222	- 85 53' 32" 0	2/1/2009
Effluent Gross	37.759167	+ 37 45' 33" 0	-85.892222	- 85 53' 32" 0	2/1/2009
Effluent Gross	37.759167	+ 37 45' 33" 0	-85.892222	- 85 53' 32" 0	2/1/2009
Effluent Gross	37.759167	+ 37 45' 33" 0	-85.892222	- 85 53' 32" 0	2/1/2009

Effluent Gross	37.759167	+ 37 45' 33" 0	-85.892222	- 85 53' 32" 0	2/1/2009
Effluent Gross	37.759167	+ 37 45' 33" 0	-85.892222	- 85 53' 32" 0	2/1/2009
Effluent Gross	37.759167	+ 37 45' 33" 0	-85.892222	- 85 53' 32" 0	2/1/2009
Effluent Gross	37.759167	+ 37 45' 33" 0	-85.892222	- 85 53' 32" 0	2/1/2009
Effluent Gross	37.759167	+ 37 45' 33" 0	-85.892222	- 85 53' 32" 0	2/1/2009
Effluent Gross	37.759167	+ 37 45' 33" 0	-85.892222	- 85 53' 32" 0	2/1/2009
Effluent Gross	37.759167	+ 37 45' 33" 0	-85.892222	- 85 53' 32" 0	2/1/2009
Effluent Gross	37.759167	+ 37 45' 33" 0	-85.892222	- 85 53' 32" 0	2/1/2009
Effluent Gross	37.759167	+ 37 45' 33" 0	-85.892222	- 85 53' 32" 0	2/1/2009
Effluent Gross	37.759167	+ 37 45' 33" 0	-85.892222	- 85 53' 32" 0	2/1/2009
Effluent Gross	37.759167	+ 37 45' 33" 0	-85.892222	- 85 53' 32" 0	2/1/2009
Effluent Gross	37.759167	+ 37 45' 33" 0	-85.892222	- 85 53' 32" 0	2/1/2009
Effluent Gross	37.759167	+ 37 45' 33" 0	-85.892222	- 85 53' 32" 0	2/1/2009
Effluent Gross	37.759167	+ 37 45' 33" 0	-85.892222	- 85 53' 32" 0	2/1/2009
Effluent Gross	37.759167	+ 37 45' 33" 0	-85.892222	- 85 53' 32" 0	2/1/2009
Effluent Gross	37.759167	+ 37 45' 33" 0	-85.892222	- 85 53' 32" 0	2/1/2009
Effluent Gross	37.759167	+ 37 45' 33" 0	-85.892222	- 85 53' 32" 0	2/1/2009
Effluent Gross	37.759167	+ 37 45' 33" 0	-85.892222	- 85 53' 32" 0	2/1/2009
Effluent Gross	37.759167	+ 37 45' 33" 0	-85.892222	- 85 53' 32" 0	2/1/2009
Effluent Gross	37.759167	+ 37 45' 33" 0	-85.892222	- 85 53' 32" 0	2/1/2009
Effluent Gross	37.759167	+ 37 45' 33" 0	-85.892222	- 85 53' 32" 0	2/1/2009
Effluent Gross	37.759167	+ 37 45' 33" 0	-85.892222	- 85 53' 32" 0	2/1/2009
Effluent Gross	37.759167	+ 37 45' 33" 0	-85.892222	- 85 53' 32" 0	2/1/2009
Effluent Gross	37.759167	+ 37 45' 33" 0	-85.892222	- 85 53' 32" 0	2/1/2009
Effluent Gross	37.759167	+ 37 45' 33" 0	-85.892222	- 85 53' 32" 0	2/1/2009
Effluent Gross	37.759167	+ 37 45' 33" 0	-85.892222	- 85 53' 32" 0	2/1/2009
Effluent Gross	37.759167	+ 37 45' 33" 0	-85.892222	- 85 53' 32" 0	2/1/2009
Effluent Gross	37.759167	+ 37 45' 33" 0	-85.892222	- 85 53' 32" 0	2/1/2009
Effluent Gross	37.759167	+ 37 45' 33" 0	-85.892222	- 85 53' 32" 0	2/1/2009
Effluent Gross	37.759167	+ 37 45' 33" 0	-85.892222	- 85 53' 32" 0	2/1/2009
Effluent Gross	37.759167	+ 37 45' 33" 0	-85.892222	- 85 53' 32" 0	2/1/2009
Effluent Gross	37.759167	+ 37 45' 33" 0	-85.892222	- 85 53' 32" 0	2/1/2009
Effluent Gross	37.759167	+ 37 45' 33" 0	-85.892222	- 85 53' 32" 0	2/1/2009
Effluent Gross	37.759167	+ 37 45' 33" 0	-85.892222	- 85 53' 32" 0	2/1/2009
Effluent Gross	37.759167	+ 37 45' 33" 0	-85.892222	- 85 53' 32" 0	2/1/2009
Effluent Gross	37.759167	+ 37 45' 33" 0	-85.892222	- 85 53' 32" 0	2/1/2009
Effluent Gross	37.759167	+ 37 45' 33" 0	-85.892222	- 85 53' 32" 0	2/1/2009
Effluent Gross	37.759167	+ 37 45' 33" 0	-85.892222	- 85 53' 32" 0	2/1/2009
Effluent Gross	37.759167	+ 37 45' 33" 0	-85.892222	- 85 53' 32" 0	2/1/2009
Effluent Gross	37.759167	+ 37 45' 33" 0	-85.892222	- 85 53' 32" 0	2/1/2009
Effluent Gross	37.759167	+ 37 45' 33" 0	-85.892222	- 85 53' 32" 0	2/1/2009
Effluent Gross	37.759167	+ 37 45' 33" 0	-85.892222	- 85 53' 32" 0	2/1/2009
Effluent Gross	37.759167	+ 37 45' 33" 0	-85.892222	- 85 53' 32" 0	2/1/2009
Effluent Gross	37.759167	+ 37 45' 33" 0	-85.892222	- 85 53' 32" 0	2/1/2009
Effluent Gross	37.759167	+ 37 45' 33" 0	-85.892222	- 85 53' 32" 0	2/1/2009
Effluent Gross	37.759167	+ 37 45' 33" 0	-85.892222	- 85 53' 32" 0	2/1/2009
Effluent Gross	37.759167	+ 37 45' 33" 0	-85.892222	- 85 53' 32" 0	2/1/2009
Effluent Gross	37.759167	+ 37 45' 33" 0	-85.892222	- 85 53' 32" 0	2/1/2009
Effluent Gross	37.759167	+ 37 45' 33" 0	-85.892222	- 85 53' 32" 0	2/1/2009
Effluent Gross	37.759167	+ 37 45' 33" 0	-85.892222	- 85 53' 32" 0	2/1/2009
Effluent Gross	37.759167	+ 37 45' 33" 0	-85.892222	- 85 53' 32" 0	2/1/2009

Effluent Gross	37.759167	+ 37 45' 33" 0	-85.892222	- 85 53' 32" 0	2/1/2009
Effluent Gross	37.759167	+ 37 45' 33" 0	-85.892222	- 85 53' 32" 0	2/1/2009
Effluent Gross	37.759167	+ 37 45' 33" 0	-85.892222	- 85 53' 32" 0	2/1/2009
Effluent Gross	37.759167	+ 37 45' 33" 0	-85.892222	- 85 53' 32" 0	2/1/2009
Effluent Gross	37.759167	+ 37 45' 33" 0	-85.892222	- 85 53' 32" 0	2/1/2009
Effluent Gross	37.759167	+ 37 45' 33" 0	-85.892222	- 85 53' 32" 0	2/1/2009
Effluent Gross	37.759167	+ 37 45' 33" 0	-85.892222	- 85 53' 32" 0	2/1/2009
Effluent Gross	37.759167	+ 37 45' 33" 0	-85.892222	- 85 53' 32" 0	2/1/2009
Effluent Gross	37.759167	+ 37 45' 33" 0	-85.892222	- 85 53' 32" 0	2/1/2009
Effluent Gross	37.759167	+ 37 45' 33" 0	-85.892222	- 85 53' 32" 0	2/1/2009
Effluent Gross	37.759167	+ 37 45' 33" 0	-85.892222	- 85 53' 32" 0	2/1/2009
Effluent Gross	37.759167	+ 37 45' 33" 0	-85.892222	- 85 53' 32" 0	2/1/2009
Effluent Gross	37.759167	+ 37 45' 33" 0	-85.892222	- 85 53' 32" 0	2/1/2009
Effluent Gross	37.759167	+ 37 45' 33" 0	-85.892222	- 85 53' 32" 0	2/1/2009
Effluent Gross	37.759167	+ 37 45' 33" 0	-85.892222	- 85 53' 32" 0	2/1/2009
Effluent Gross	37.759167	+ 37 45' 33" 0	-85.892222	- 85 53' 32" 0	2/1/2009
Effluent Gross	37.759167	+ 37 45' 33" 0	-85.892222	- 85 53' 32" 0	2/1/2009
Effluent Gross	37.759167	+ 37 45' 33" 0	-85.892222	- 85 53' 32" 0	2/1/2009
Effluent Gross	37.759167	+ 37 45' 33" 0	-85.892222	- 85 53' 32" 0	2/1/2009
Effluent Gross	37.759167	+ 37 45' 33" 0	-85.892222	- 85 53' 32" 0	2/1/2009
Effluent Gross	37.759167	+ 37 45' 33" 0	-85.892222	- 85 53' 32" 0	2/1/2009
Effluent Gross	37.759167	+ 37 45' 33" 0	-85.892222	- 85 53' 32" 0	2/1/2009
Effluent Gross	37.759167	+ 37 45' 33" 0	-85.892222	- 85 53' 32" 0	2/1/2009
Effluent Gross	37.759167	+ 37 45' 33" 0	-85.892222	- 85 53' 32" 0	2/1/2009
Effluent Gross	37.759167	+ 37 45' 33" 0	-85.892222	- 85 53' 32" 0	2/1/2009
Effluent Gross	37.759167	+ 37 45' 33" 0	-85.892222	- 85 53' 32" 0	2/1/2009
Effluent Gross	37.759167	+ 37 45' 33" 0	-85.892222	- 85 53' 32" 0	2/1/2009
Effluent Gross	37.759167	+ 37 45' 33" 0	-85.892222	- 85 53' 32" 0	2/1/2009
Effluent Gross	37.759167	+ 37 45' 33" 0	-85.892222	- 85 53' 32" 0	2/1/2009
Effluent Gross	37.759167	+ 37 45' 33" 0	-85.892222	- 85 53' 32" 0	2/1/2009
Effluent Gross	37.759167	+ 37 45' 33" 0	-85.892222	- 85 53' 32" 0	2/1/2009
Effluent Gross	37.759167	+ 37 45' 33" 0	-85.892222	- 85 53' 32" 0	2/1/2009
Effluent Gross	37.759167	+ 37 45' 33" 0	-85.892222	- 85 53' 32" 0	2/1/2009
Effluent Gross	37.759167	+ 37 45' 33" 0	-85.892222	- 85 53' 32" 0	2/1/2009
Effluent Gross	37.759167	+ 37 45' 33" 0	-85.892222	- 85 53' 32" 0	2/1/2009
Effluent Gross	37.759167	+ 37 45' 33" 0	-85.892222	- 85 53' 32" 0	2/1/2009
Effluent Gross	37.759167	+ 37 45' 33" 0	-85.892222	- 85 53' 32" 0	2/1/2009
Effluent Gross	37.759167	+ 37 45' 33" 0	-85.892222	- 85 53' 32" 0	2/1/2009
Effluent Gross	37.759167	+ 37 45' 33" 0	-85.892222	- 85 53' 32" 0	2/1/2009
Effluent Gross	37.759167	+ 37 45' 33" 0	-85.892222	- 85 53' 32" 0	2/1/2009
Effluent Gross	37.759167	+ 37 45' 33" 0	-85.892222	- 85 53' 32" 0	2/1/2009
Effluent Gross	37.759167	+ 37 45' 33" 0	-85.892222	- 85 53' 32" 0	2/1/2009
Effluent Gross	37.759167	+ 37 45' 33" 0	-85.892222	- 85 53' 32" 0	2/1/2009
Effluent Gross	37.759167	+ 37 45' 33" 0	-85.892222	- 85 53' 32" 0	2/1/2009
Effluent Gross	37.759167	+ 37 45' 33" 0	-85.892222	- 85 53' 32" 0	2/1/2009
Effluent Gross	37.759167	+ 37 45' 33" 0	-85.892222	- 85 53' 32" 0	2/1/2009
Effluent Gross	37.759167	+ 37 45' 33" 0	-85.892222	- 85 53' 32" 0	2/1/2009
Effluent Gross	37.759167	+ 37 45' 33" 0	-85.892222	- 85 53' 32" 0	2/1/2009
Effluent Gross	37.759167	+ 37 45' 33" 0	-85.892222	- 85 53' 32" 0	2/1/2009
Effluent Gross	37.759167	+ 37 45' 33" 0	-85.892222	- 85 53' 32" 0	2/1/2009
Effluent Gross	37.759167	+ 37 45' 33" 0	-85.892222	- 85 53' 32" 0	2/1/2009

Effluent Gross	37.759167	+ 37 45' 33" 0	-85.892222	- 85 53' 32" 0	2/1/2009
Effluent Gross	37.759167	+ 37 45' 33" 0	-85.892222	- 85 53' 32" 0	2/1/2009
Effluent Gross	37.759167	+ 37 45' 33" 0	-85.892222	- 85 53' 32" 0	2/1/2009
Effluent Gross	37.759167	+ 37 45' 33" 0	-85.892222	- 85 53' 32" 0	2/1/2009
Effluent Gross	37.759167	+ 37 45' 33" 0	-85.892222	- 85 53' 32" 0	2/1/2009
Effluent Gross	37.759167	+ 37 45' 33" 0	-85.892222	- 85 53' 32" 0	2/1/2009
Effluent Gross	37.759167	+ 37 45' 33" 0	-85.892222	- 85 53' 32" 0	2/1/2009
Effluent Gross	37.759167	+ 37 45' 33" 0	-85.892222	- 85 53' 32" 0	2/1/2009
Effluent Gross	37.759167	+ 37 45' 33" 0	-85.892222	- 85 53' 32" 0	2/1/2009
Effluent Gross	37.759167	+ 37 45' 33" 0	-85.892222	- 85 53' 32" 0	2/1/2009
Effluent Gross	37.759167	+ 37 45' 33" 0	-85.892222	- 85 53' 32" 0	2/1/2009
Effluent Gross	37.759167	+ 37 45' 33" 0	-85.892222	- 85 53' 32" 0	2/1/2009
Effluent Gross	37.759167	+ 37 45' 33" 0	-85.892222	- 85 53' 32" 0	2/1/2009
Effluent Gross	37.759167	+ 37 45' 33" 0	-85.892222	- 85 53' 32" 0	2/1/2009
Effluent Gross	37.759167	+ 37 45' 33" 0	-85.892222	- 85 53' 32" 0	2/1/2009
Effluent Gross	37.759167	+ 37 45' 33" 0	-85.892222	- 85 53' 32" 0	2/1/2009
Effluent Gross	37.759167	+ 37 45' 33" 0	-85.892222	- 85 53' 32" 0	2/1/2009
Effluent Gross	37.759167	+ 37 45' 33" 0	-85.892222	- 85 53' 32" 0	2/1/2009
Effluent Gross	37.759167	+ 37 45' 33" 0	-85.892222	- 85 53' 32" 0	2/1/2009
Effluent Gross	37.759167	+ 37 45' 33" 0	-85.892222	- 85 53' 32" 0	2/1/2009
Effluent Gross	37.759167	+ 37 45' 33" 0	-85.892222	- 85 53' 32" 0	2/1/2009
Effluent Gross	37.759167	+ 37 45' 33" 0	-85.892222	- 85 53' 32" 0	2/1/2009
Effluent Gross	37.759167	+ 37 45' 33" 0	-85.892222	- 85 53' 32" 0	2/1/2009
Effluent Gross	37.759167	+ 37 45' 33" 0	-85.892222	- 85 53' 32" 0	2/1/2009
Effluent Gross	37.759167	+ 37 45' 33" 0	-85.892222	- 85 53' 32" 0	2/1/2009
Effluent Gross	37.759167	+ 37 45' 33" 0	-85.892222	- 85 53' 32" 0	2/1/2009
Effluent Gross	37.759167	+ 37 45' 33" 0	-85.892222	- 85 53' 32" 0	2/1/2009
Effluent Gross	37.759167	+ 37 45' 33" 0	-85.892222	- 85 53' 32" 0	2/1/2009
Effluent Gross	37.759167	+ 37 45' 33" 0	-85.892222	- 85 53' 32" 0	2/1/2009
Effluent Gross	37.759167	+ 37 45' 33" 0	-85.892222	- 85 53' 32" 0	2/1/2009
Effluent Gross	37.759167	+ 37 45' 33" 0	-85.892222	- 85 53' 32" 0	2/1/2009
Effluent Gross	37.759167	+ 37 45' 33" 0	-85.892222	- 85 53' 32" 0	2/1/2009
Effluent Gross	37.759167	+ 37 45' 33" 0	-85.892222	- 85 53' 32" 0	2/1/2009
Effluent Gross	37.759167	+ 37 45' 33" 0	-85.892222	- 85 53' 32" 0	2/1/2009
Effluent Gross	37.759167	+ 37 45' 33" 0	-85.892222	- 85 53' 32" 0	2/1/2009
Effluent Gross	37.759167	+ 37 45' 33" 0	-85.892222	- 85 53' 32" 0	2/1/2009
Effluent Gross	37.759167	+ 37 45' 33" 0	-85.892222	- 85 53' 32" 0	2/1/2009
Effluent Gross	37.759167	+ 37 45' 33" 0	-85.892222	- 85 53' 32" 0	2/1/2009
Effluent Gross	37.759167	+ 37 45' 33" 0	-85.892222	- 85 53' 32" 0	2/1/2009
Effluent Gross	37.759167	+ 37 45' 33" 0	-85.892222	- 85 53' 32" 0	2/1/2009
Effluent Gross	37.759167	+ 37 45' 33" 0	-85.892222	- 85 53' 32" 0	2/1/2009
Effluent Gross	37.759167	+ 37 45' 33" 0	-85.892222	- 85 53' 32" 0	2/1/2009
Effluent Gross	37.759167	+ 37 45' 33" 0	-85.892222	- 85 53' 32" 0	2/1/2009
Effluent Gross	37.759167	+ 37 45' 33" 0	-85.892222	- 85 53' 32" 0	2/1/2009
Effluent Gross	37.759167	+ 37 45' 33" 0	-85.892222	- 85 53' 32" 0	2/1/2009
Effluent Gross	37.759167	+ 37 45' 33" 0	-85.892222	- 85 53' 32" 0	2/1/2009
Effluent Gross	37.759167	+ 37 45' 33" 0	-85.892222	- 85 53' 32" 0	2/1/2009
Effluent Gross	37.759167	+ 37 45' 33" 0	-85.892222	- 85 53' 32" 0	2/1/2009
Effluent Gross	37.759167	+ 37 45' 33" 0	-85.892222	- 85 53' 32" 0	2/1/2009
Effluent Gross	37.759167	+ 37 45' 33" 0	-85.892222	- 85 53' 32" 0	2/1/2009
Effluent Gross	37.759167	+ 37 45' 33" 0	-85.892222	- 85 53' 32" 0	2/1/2009

Effluent Gross	37.759167	+ 37 45' 33" 0	-85.892222	- 85 53' 32" 0	2/1/2009
Effluent Gross	37.759167	+ 37 45' 33" 0	-85.892222	- 85 53' 32" 0	2/1/2009
Effluent Gross	37.759167	+ 37 45' 33" 0	-85.892222	- 85 53' 32" 0	2/1/2009
Effluent Gross	37.759167	+ 37 45' 33" 0	-85.892222	- 85 53' 32" 0	2/1/2009
Effluent Gross	37.759167	+ 37 45' 33" 0	-85.892222	- 85 53' 32" 0	2/1/2009
Effluent Gross	37.759167	+ 37 45' 33" 0	-85.892222	- 85 53' 32" 0	2/1/2009
Effluent Gross	37.759167	+ 37 45' 33" 0	-85.892222	- 85 53' 32" 0	2/1/2009
Effluent Gross	37.759167	+ 37 45' 33" 0	-85.892222	- 85 53' 32" 0	2/1/2009
Effluent Gross	37.759167	+ 37 45' 33" 0	-85.892222	- 85 53' 32" 0	2/1/2009
Effluent Gross	37.759167	+ 37 45' 33" 0	-85.892222	- 85 53' 32" 0	2/1/2009
Effluent Gross	37.759167	+ 37 45' 33" 0	-85.892222	- 85 53' 32" 0	2/1/2009
Effluent Gross	37.759167	+ 37 45' 33" 0	-85.892222	- 85 53' 32" 0	2/1/2009
Effluent Gross	37.759167	+ 37 45' 33" 0	-85.892222	- 85 53' 32" 0	2/1/2009
Effluent Gross	37.759167	+ 37 45' 33" 0	-85.892222	- 85 53' 32" 0	2/1/2009
Effluent Gross	37.759167	+ 37 45' 33" 0	-85.892222	- 85 53' 32" 0	2/1/2009
Effluent Gross	37.759167	+ 37 45' 33" 0	-85.892222	- 85 53' 32" 0	2/1/2009
Effluent Gross	37.759167	+ 37 45' 33" 0	-85.892222	- 85 53' 32" 0	2/1/2009
Effluent Gross	37.759167	+ 37 45' 33" 0	-85.892222	- 85 53' 32" 0	2/1/2009
Effluent Gross	37.759167	+ 37 45' 33" 0	-85.892222	- 85 53' 32" 0	2/1/2009
Effluent Gross	37.759167	+ 37 45' 33" 0	-85.892222	- 85 53' 32" 0	2/1/2009
Effluent Gross	37.759167	+ 37 45' 33" 0	-85.892222	- 85 53' 32" 0	2/1/2009
Effluent Gross	37.759167	+ 37 45' 33" 0	-85.892222	- 85 53' 32" 0	2/1/2009
Effluent Gross	37.759167	+ 37 45' 33" 0	-85.892222	- 85 53' 32" 0	2/1/2009
Effluent Gross	37.759167	+ 37 45' 33" 0	-85.892222	- 85 53' 32" 0	2/1/2009
Effluent Gross	37.759167	+ 37 45' 33" 0	-85.892222	- 85 53' 32" 0	2/1/2009
Effluent Gross	37.759167	+ 37 45' 33" 0	-85.892222	- 85 53' 32" 0	2/1/2009
Effluent Gross	37.759167	+ 37 45' 33" 0	-85.892222	- 85 53' 32" 0	2/1/2009
Effluent Gross	37.759167	+ 37 45' 33" 0	-85.892222	- 85 53' 32" 0	2/1/2009
Effluent Gross	37.759167	+ 37 45' 33" 0	-85.892222	- 85 53' 32" 0	2/1/2009
Effluent Gross	37.759167	+ 37 45' 33" 0	-85.892222	- 85 53' 32" 0	2/1/2009
Effluent Gross	37.759167	+ 37 45' 33" 0	-85.892222	- 85 53' 32" 0	2/1/2009
Effluent Gross	37.759167	+ 37 45' 33" 0	-85.892222	- 85 53' 32" 0	2/1/2009
Effluent Gross	37.759167	+ 37 45' 33" 0	-85.892222	- 85 53' 32" 0	2/1/2009
Effluent Gross	37.759167	+ 37 45' 33" 0	-85.892222	- 85 53' 32" 0	2/1/2009
Effluent Gross	37.759167	+ 37 45' 33" 0	-85.892222	- 85 53' 32" 0	2/1/2009
Effluent Gross	37.759167	+ 37 45' 33" 0	-85.892222	- 85 53' 32" 0	2/1/2009
Effluent Gross	37.759167	+ 37 45' 33" 0	-85.892222	- 85 53' 32" 0	2/1/2009
Effluent Gross	37.759167	+ 37 45' 33" 0	-85.892222	- 85 53' 32" 0	2/1/2009
Effluent Gross	37.759167	+ 37 45' 33" 0	-85.892222	- 85 53' 32" 0	2/1/2009
Effluent Gross	37.759167	+ 37 45' 33" 0	-85.892222	- 85 53' 32" 0	2/1/2009
Effluent Gross	37.759167	+ 37 45' 33" 0	-85.892222	- 85 53' 32" 0	2/1/2009
Effluent Gross	37.759167	+ 37 45' 33" 0	-85.892222	- 85 53' 32" 0	2/1/2009
Effluent Gross	37.759167	+ 37 45' 33" 0	-85.892222	- 85 53' 32" 0	2/1/2009
Effluent Gross	37.759167	+ 37 45' 33" 0	-85.892222	- 85 53' 32" 0	2/1/2009
Effluent Gross	37.759167	+ 37 45' 33" 0	-85.892222	- 85 53' 32" 0	2/1/2009
Effluent Gross	37.759167	+ 37 45' 33" 0	-85.892222	- 85 53' 32" 0	2/1/2009
Effluent Gross	37.759167	+ 37 45' 33" 0	-85.892222	- 85 53' 32" 0	2/1/2009
Effluent Gross	37.759167	+ 37 45' 33" 0	-85.892222	- 85 53' 32" 0	2/1/2009
Effluent Gross	37.759167	+ 37 45' 33" 0	-85.892222	- 85 53' 32" 0	2/1/2009
Effluent Gross	37.759167	+ 37 45' 33" 0	-85.892222	- 85 53' 32" 0	2/1/2009
Effluent Gross	37.759167	+ 37 45' 33" 0	-85.892222	- 85 53' 32" 0	2/1/2009

Effluent Gross	37.759167	+ 37 45' 33" 0	-85.892222	- 85 53' 32" 0	2/1/2009
Effluent Gross	37.759167	+ 37 45' 33" 0	-85.892222	- 85 53' 32" 0	2/1/2009
Effluent Gross	37.759167	+ 37 45' 33" 0	-85.892222	- 85 53' 32" 0	2/1/2009
Effluent Gross	37.759167	+ 37 45' 33" 0	-85.892222	- 85 53' 32" 0	2/1/2009
Effluent Gross	37.759167	+ 37 45' 33" 0	-85.892222	- 85 53' 32" 0	2/1/2009
Effluent Gross	37.759167	+ 37 45' 33" 0	-85.892222	- 85 53' 32" 0	2/1/2009
Effluent Gross	37.759167	+ 37 45' 33" 0	-85.892222	- 85 53' 32" 0	2/1/2009
Effluent Gross	37.759167	+ 37 45' 33" 0	-85.892222	- 85 53' 32" 0	2/1/2009
Effluent Gross	37.759167	+ 37 45' 33" 0	-85.892222	- 85 53' 32" 0	2/1/2009
Effluent Gross	37.759167	+ 37 45' 33" 0	-85.892222	- 85 53' 32" 0	2/1/2009
Effluent Gross	37.759167	+ 37 45' 33" 0	-85.892222	- 85 53' 32" 0	2/1/2009
Effluent Gross	37.759167	+ 37 45' 33" 0	-85.892222	- 85 53' 32" 0	2/1/2009
Effluent Gross	37.759167	+ 37 45' 33" 0	-85.892222	- 85 53' 32" 0	2/1/2009
Effluent Gross	37.759167	+ 37 45' 33" 0	-85.892222	- 85 53' 32" 0	2/1/2009
Effluent Gross	37.759167	+ 37 45' 33" 0	-85.892222	- 85 53' 32" 0	2/1/2009
Effluent Gross	37.759167	+ 37 45' 33" 0	-85.892222	- 85 53' 32" 0	2/1/2009
Effluent Gross	37.759167	+ 37 45' 33" 0	-85.892222	- 85 53' 32" 0	2/1/2009
Effluent Gross	37.759167	+ 37 45' 33" 0	-85.892222	- 85 53' 32" 0	2/1/2009
Effluent Gross	37.759167	+ 37 45' 33" 0	-85.892222	- 85 53' 32" 0	2/1/2009
Effluent Gross	37.759167	+ 37 45' 33" 0	-85.892222	- 85 53' 32" 0	2/1/2009
Effluent Gross	37.759167	+ 37 45' 33" 0	-85.892222	- 85 53' 32" 0	2/1/2009
Effluent Gross	37.759167	+ 37 45' 33" 0	-85.892222	- 85 53' 32" 0	2/1/2009
Effluent Gross	37.759167	+ 37 45' 33" 0	-85.892222	- 85 53' 32" 0	2/1/2009
Effluent Gross	37.759167	+ 37 45' 33" 0	-85.892222	- 85 53' 32" 0	2/1/2009
Effluent Gross	37.759167	+ 37 45' 33" 0	-85.892222	- 85 53' 32" 0	2/1/2009
Effluent Gross	37.759167	+ 37 45' 33" 0	-85.892222	- 85 53' 32" 0	2/1/2009
Effluent Gross	37.759167	+ 37 45' 33" 0	-85.892222	- 85 53' 32" 0	2/1/2009
Effluent Gross	37.759167	+ 37 45' 33" 0	-85.892222	- 85 53' 32" 0	2/1/2009
Effluent Gross	37.759167	+ 37 45' 33" 0	-85.892222	- 85 53' 32" 0	2/1/2009
Effluent Gross	37.759167	+ 37 45' 33" 0	-85.892222	- 85 53' 32" 0	2/1/2009
Effluent Gross	37.759167	+ 37 45' 33" 0	-85.892222	- 85 53' 32" 0	2/1/2009
Effluent Gross	37.759167	+ 37 45' 33" 0	-85.892222	- 85 53' 32" 0	2/1/2009
Effluent Gross	37.759167	+ 37 45' 33" 0	-85.892222	- 85 53' 32" 0	2/1/2009
Effluent Gross	37.759167	+ 37 45' 33" 0	-85.892222	- 85 53' 32" 0	2/1/2009
Effluent Gross	37.759167	+ 37 45' 33" 0	-85.892222	- 85 53' 32" 0	2/1/2009
Effluent Gross	37.759167	+ 37 45' 33" 0	-85.892222	- 85 53' 32" 0	2/1/2009
Effluent Gross	37.759167	+ 37 45' 33" 0	-85.892222	- 85 53' 32" 0	2/1/2009
Effluent Gross	37.759167	+ 37 45' 33" 0	-85.892222	- 85 53' 32" 0	2/1/2009
Effluent Gross	37.759167	+ 37 45' 33" 0	-85.892222	- 85 53' 32" 0	2/1/2009
Effluent Gross	37.759167	+ 37 45' 33" 0	-85.892222	- 85 53' 32" 0	2/1/2009
Effluent Gross	37.759167	+ 37 45' 33" 0	-85.892222	- 85 53' 32" 0	2/1/2009
Effluent Gross	37.759167	+ 37 45' 33" 0	-85.892222	- 85 53' 32" 0	2/1/2009
Effluent Gross	37.759167	+ 37 45' 33" 0	-85.892222	- 85 53' 32" 0	2/1/2009
Effluent Gross	37.759167	+ 37 45' 33" 0	-85.892222	- 85 53' 32" 0	2/1/2009
Effluent Gross	37.759167	+ 37 45' 33" 0	-85.892222	- 85 53' 32" 0	2/1/2009
Effluent Gross	37.759167	+ 37 45' 33" 0	-85.892222	- 85 53' 32" 0	2/1/2009
Effluent Gross	37.759167	+ 37 45' 33" 0	-85.892222	- 85 53' 32" 0	2/1/2009
Effluent Gross	37.759167	+ 37 45' 33" 0	-85.892222	- 85 53' 32" 0	2/1/2009
Effluent Gross	37.759167	+ 37 45' 33" 0	-85.892222	- 85 53' 32" 0	2/1/2009
Effluent Gross	37.759167	+ 37 45' 33" 0	-85.892222	- 85 53' 32" 0	2/1/2009
Effluent Gross	37.759167	+ 37 45' 33" 0	-85.892222	- 85 53' 32" 0	2/1/2009

Effluent Gross	37.759167	+ 37 45' 33" 0	-85.892222	- 85 53' 32" 0	2/1/2009
Effluent Gross	37.759167	+ 37 45' 33" 0	-85.892222	- 85 53' 32" 0	2/1/2009
Effluent Gross	37.759167	+ 37 45' 33" 0	-85.892222	- 85 53' 32" 0	2/1/2009
Effluent Gross	37.759167	+ 37 45' 33" 0	-85.892222	- 85 53' 32" 0	2/1/2009
Effluent Gross	37.759167	+ 37 45' 33" 0	-85.892222	- 85 53' 32" 0	2/1/2009
Effluent Gross	37.759167	+ 37 45' 33" 0	-85.892222	- 85 53' 32" 0	2/1/2009
Effluent Gross	37.759167	+ 37 45' 33" 0	-85.892222	- 85 53' 32" 0	2/1/2009
Effluent Gross	37.759167	+ 37 45' 33" 0	-85.892222	- 85 53' 32" 0	2/1/2009
Effluent Gross	37.759167	+ 37 45' 33" 0	-85.892222	- 85 53' 32" 0	2/1/2009
Effluent Gross	37.759167	+ 37 45' 33" 0	-85.892222	- 85 53' 32" 0	2/1/2009
Effluent Gross	37.759167	+ 37 45' 33" 0	-85.892222	- 85 53' 32" 0	2/1/2009
Effluent Gross	37.759167	+ 37 45' 33" 0	-85.892222	- 85 53' 32" 0	2/1/2009
Effluent Gross	37.759167	+ 37 45' 33" 0	-85.892222	- 85 53' 32" 0	2/1/2009
Effluent Gross	37.759167	+ 37 45' 33" 0	-85.892222	- 85 53' 32" 0	2/1/2009
Effluent Gross	37.759167	+ 37 45' 33" 0	-85.892222	- 85 53' 32" 0	2/1/2009
Effluent Gross	37.759167	+ 37 45' 33" 0	-85.892222	- 85 53' 32" 0	2/1/2009
Effluent Gross	37.759167	+ 37 45' 33" 0	-85.892222	- 85 53' 32" 0	2/1/2009
Effluent Gross	37.759167	+ 37 45' 33" 0	-85.892222	- 85 53' 32" 0	2/1/2009
Effluent Gross	37.759167	+ 37 45' 33" 0	-85.892222	- 85 53' 32" 0	2/1/2009
Effluent Gross	37.759167	+ 37 45' 33" 0	-85.892222	- 85 53' 32" 0	2/1/2009
Effluent Gross	37.759167	+ 37 45' 33" 0	-85.892222	- 85 53' 32" 0	2/1/2009
Effluent Gross	37.759167	+ 37 45' 33" 0	-85.892222	- 85 53' 32" 0	2/1/2009
Effluent Gross	37.759167	+ 37 45' 33" 0	-85.892222	- 85 53' 32" 0	2/1/2009
Effluent Gross	37.759167	+ 37 45' 33" 0	-85.892222	- 85 53' 32" 0	2/1/2009
Effluent Gross	37.759167	+ 37 45' 33" 0	-85.892222	- 85 53' 32" 0	2/1/2009
Effluent Gross	37.759167	+ 37 45' 33" 0	-85.892222	- 85 53' 32" 0	2/1/2009
Effluent Gross	37.759167	+ 37 45' 33" 0	-85.892222	- 85 53' 32" 0	2/1/2009
Effluent Gross	37.759167	+ 37 45' 33" 0	-85.892222	- 85 53' 32" 0	2/1/2009
Effluent Gross	37.759167	+ 37 45' 33" 0	-85.892222	- 85 53' 32" 0	2/1/2009
Effluent Gross	37.759167	+ 37 45' 33" 0	-85.892222	- 85 53' 32" 0	2/1/2009
Effluent Gross	37.759167	+ 37 45' 33" 0	-85.892222	- 85 53' 32" 0	2/1/2009
Effluent Gross	37.759167	+ 37 45' 33" 0	-85.892222	- 85 53' 32" 0	2/1/2009
Effluent Gross	37.759167	+ 37 45' 33" 0	-85.892222	- 85 53' 32" 0	2/1/2009
Effluent Gross	37.759167	+ 37 45' 33" 0	-85.892222	- 85 53' 32" 0	2/1/2009
Effluent Gross	37.759167	+ 37 45' 33" 0	-85.892222	- 85 53' 32" 0	2/1/2009
Effluent Gross	37.759167	+ 37 45' 33" 0	-85.892222	- 85 53' 32" 0	2/1/2009
Effluent Gross	37.759167	+ 37 45' 33" 0	-85.892222	- 85 53' 32" 0	2/1/2009
Effluent Gross	37.759167	+ 37 45' 33" 0	-85.892222	- 85 53' 32" 0	2/1/2009
Effluent Gross	37.759167	+ 37 45' 33" 0	-85.892222	- 85 53' 32" 0	2/1/2009
Effluent Gross	37.759167	+ 37 45' 33" 0	-85.892222	- 85 53' 32" 0	2/1/2009
Effluent Gross	37.759167	+ 37 45' 33" 0	-85.892222	- 85 53' 32" 0	2/1/2009
Effluent Gross	37.759167	+ 37 45' 33" 0	-85.892222	- 85 53' 32" 0	2/1/2009
Effluent Gross	37.759167	+ 37 45' 33" 0	-85.892222	- 85 53' 32" 0	2/1/2009
Effluent Gross	37.759167	+ 37 45' 33" 0	-85.892222	- 85 53' 32" 0	2/1/2009
Effluent Gross	37.759167	+ 37 45' 33" 0	-85.892222	- 85 53' 32" 0	2/1/2009
Effluent Gross	37.759167	+ 37 45' 33" 0	-85.892222	- 85 53' 32" 0	2/1/2009
Effluent Gross	37.759167	+ 37 45' 33" 0	-85.892222	- 85 53' 32" 0	2/1/2009
Effluent Gross	37.759167	+ 37 45' 33" 0	-85.892222	- 85 53' 32" 0	2/1/2009
Effluent Gross	37.759167	+ 37 45' 33" 0	-85.892222	- 85 53' 32" 0	2/1/2009
Effluent Gross	37.759167	+ 37 45' 33" 0	-85.892222	- 85 53' 32" 0	2/1/2009
Effluent Gross	37.759167	+ 37 45' 33" 0	-85.892222	- 85 53' 32" 0	2/1/2009

Effluent Gross	37.759167	+ 37 45' 33" 0	-85.892222	- 85 53' 32" 0	2/1/2009
Effluent Gross	37.759167	+ 37 45' 33" 0	-85.892222	- 85 53' 32" 0	2/1/2009
Effluent Gross	37.759167	+ 37 45' 33" 0	-85.892222	- 85 53' 32" 0	2/1/2009
Effluent Gross	37.759167	+ 37 45' 33" 0	-85.892222	- 85 53' 32" 0	2/1/2009
Effluent Gross	37.759167	+ 37 45' 33" 0	-85.892222	- 85 53' 32" 0	2/1/2009
Effluent Gross	37.759167	+ 37 45' 33" 0	-85.892222	- 85 53' 32" 0	2/1/2009
Effluent Gross	37.759167	+ 37 45' 33" 0	-85.892222	- 85 53' 32" 0	2/1/2009
Effluent Gross	37.759167	+ 37 45' 33" 0	-85.892222	- 85 53' 32" 0	2/1/2009
Effluent Gross	37.759167	+ 37 45' 33" 0	-85.892222	- 85 53' 32" 0	2/1/2009
Effluent Gross	37.759167	+ 37 45' 33" 0	-85.892222	- 85 53' 32" 0	2/1/2009
Effluent Gross	37.759167	+ 37 45' 33" 0	-85.892222	- 85 53' 32" 0	2/1/2009
Effluent Gross	37.759167	+ 37 45' 33" 0	-85.892222	- 85 53' 32" 0	2/1/2009
Effluent Gross	37.759167	+ 37 45' 33" 0	-85.892222	- 85 53' 32" 0	2/1/2009
Effluent Gross	37.759167	+ 37 45' 33" 0	-85.892222	- 85 53' 32" 0	2/1/2009
Effluent Gross	37.759167	+ 37 45' 33" 0	-85.892222	- 85 53' 32" 0	2/1/2009
Effluent Gross	37.759167	+ 37 45' 33" 0	-85.892222	- 85 53' 32" 0	2/1/2009
Effluent Gross	37.759167	+ 37 45' 33" 0	-85.892222	- 85 53' 32" 0	2/1/2009
Effluent Gross	37.759167	+ 37 45' 33" 0	-85.892222	- 85 53' 32" 0	2/1/2009
Effluent Gross	37.759167	+ 37 45' 33" 0	-85.892222	- 85 53' 32" 0	2/1/2009
Effluent Gross	37.759167	+ 37 45' 33" 0	-85.892222	- 85 53' 32" 0	2/1/2009
Effluent Gross	37.759167	+ 37 45' 33" 0	-85.892222	- 85 53' 32" 0	2/1/2009
Effluent Gross	37.759167	+ 37 45' 33" 0	-85.892222	- 85 53' 32" 0	2/1/2009
Effluent Gross	37.759167	+ 37 45' 33" 0	-85.892222	- 85 53' 32" 0	2/1/2009
Effluent Gross	37.759167	+ 37 45' 33" 0	-85.892222	- 85 53' 32" 0	2/1/2009
Effluent Gross	37.759167	+ 37 45' 33" 0	-85.892222	- 85 53' 32" 0	2/1/2009
Effluent Gross	37.759167	+ 37 45' 33" 0	-85.892222	- 85 53' 32" 0	2/1/2009
Effluent Gross	37.759167	+ 37 45' 33" 0	-85.892222	- 85 53' 32" 0	2/1/2009
Effluent Gross	37.759167	+ 37 45' 33" 0	-85.892222	- 85 53' 32" 0	2/1/2009
Effluent Gross	37.759167	+ 37 45' 33" 0	-85.892222	- 85 53' 32" 0	2/1/2009
Effluent Gross	37.759167	+ 37 45' 33" 0	-85.892222	- 85 53' 32" 0	2/1/2009
Effluent Gross	37.759167	+ 37 45' 33" 0	-85.892222	- 85 53' 32" 0	2/1/2009
Effluent Gross	37.759167	+ 37 45' 33" 0	-85.892222	- 85 53' 32" 0	2/1/2009
Effluent Gross	37.759167	+ 37 45' 33" 0	-85.892222	- 85 53' 32" 0	2/1/2009
Effluent Gross	37.759167	+ 37 45' 33" 0	-85.892222	- 85 53' 32" 0	2/1/2009
Effluent Gross	37.759167	+ 37 45' 33" 0	-85.892222	- 85 53' 32" 0	2/1/2009
Effluent Gross	37.759167	+ 37 45' 33" 0	-85.892222	- 85 53' 32" 0	2/1/2009
Effluent Gross	37.759167	+ 37 45' 33" 0	-85.892222	- 85 53' 32" 0	2/1/2009
Effluent Gross	37.759167	+ 37 45' 33" 0	-85.892222	- 85 53' 32" 0	2/1/2009
Effluent Gross	37.759167	+ 37 45' 33" 0	-85.892222	- 85 53' 32" 0	2/1/2009
Effluent Gross	37.759167	+ 37 45' 33" 0	-85.892222	- 85 53' 32" 0	2/1/2009
Effluent Gross	37.759167	+ 37 45' 33" 0	-85.892222	- 85 53' 32" 0	2/1/2009
Effluent Gross	37.759167	+ 37 45' 33" 0	-85.892222	- 85 53' 32" 0	2/1/2009
Effluent Gross	37.759167	+ 37 45' 33" 0	-85.892222	- 85 53' 32" 0	2/1/2009
Effluent Gross	37.759167	+ 37 45' 33" 0	-85.892222	- 85 53' 32" 0	2/1/2009
Effluent Gross	37.759167	+ 37 45' 33" 0	-85.892222	- 85 53' 32" 0	2/1/2009
Effluent Gross	37.759167	+ 37 45' 33" 0	-85.892222	- 85 53' 32" 0	2/1/2009
Effluent Gross	37.759167	+ 37 45' 33" 0	-85.892222	- 85 53' 32" 0	2/1/2009
Effluent Gross	37.759167	+ 37 45' 33" 0	-85.892222	- 85 53' 32" 0	2/1/2009
Effluent Gross	37.759167	+ 37 45' 33" 0	-85.892222	- 85 53' 32" 0	2/1/2009
Effluent Gross	37.759167	+ 37 45' 33" 0	-85.892222	- 85 53' 32" 0	2/1/2009
Effluent Gross	37.759167	+ 37 45' 33" 0	-85.892222	- 85 53' 32" 0	2/1/2009

Effluent Gross	37.759167	+ 37 45' 33" 0	-85.892222	- 85 53' 32" 0	2/1/2009
Effluent Gross	37.759167	+ 37 45' 33" 0	-85.892222	- 85 53' 32" 0	2/1/2009
Effluent Gross	37.759167	+ 37 45' 33" 0	-85.892222	- 85 53' 32" 0	2/1/2009
Effluent Gross	37.759167	+ 37 45' 33" 0	-85.892222	- 85 53' 32" 0	2/1/2009
Effluent Gross	37.759167	+ 37 45' 33" 0	-85.892222	- 85 53' 32" 0	2/1/2009
Effluent Gross	37.759167	+ 37 45' 33" 0	-85.892222	- 85 53' 32" 0	2/1/2009
Effluent Gross	37.759167	+ 37 45' 33" 0	-85.892222	- 85 53' 32" 0	2/1/2009
Effluent Gross	37.759167	+ 37 45' 33" 0	-85.892222	- 85 53' 32" 0	2/1/2009
Effluent Gross	37.759167	+ 37 45' 33" 0	-85.892222	- 85 53' 32" 0	2/1/2009
Effluent Gross	37.759167	+ 37 45' 33" 0	-85.892222	- 85 53' 32" 0	2/1/2009
Effluent Gross	37.759167	+ 37 45' 33" 0	-85.892222	- 85 53' 32" 0	2/1/2009
Effluent Gross	37.759167	+ 37 45' 33" 0	-85.892222	- 85 53' 32" 0	2/1/2009
Effluent Gross	37.759167	+ 37 45' 33" 0	-85.892222	- 85 53' 32" 0	2/1/2009
Effluent Gross	37.759167	+ 37 45' 33" 0	-85.892222	- 85 53' 32" 0	2/1/2009
Effluent Gross	37.759167	+ 37 45' 33" 0	-85.892222	- 85 53' 32" 0	2/1/2009
Effluent Gross	37.759167	+ 37 45' 33" 0	-85.892222	- 85 53' 32" 0	2/1/2009
Effluent Gross	37.759167	+ 37 45' 33" 0	-85.892222	- 85 53' 32" 0	2/1/2009
Effluent Gross	37.759167	+ 37 45' 33" 0	-85.892222	- 85 53' 32" 0	2/1/2009
Effluent Gross	37.759167	+ 37 45' 33" 0	-85.892222	- 85 53' 32" 0	2/1/2009
Effluent Gross	37.759167	+ 37 45' 33" 0	-85.892222	- 85 53' 32" 0	2/1/2009
Effluent Gross	37.759167	+ 37 45' 33" 0	-85.892222	- 85 53' 32" 0	2/1/2009
Effluent Gross	37.759167	+ 37 45' 33" 0	-85.892222	- 85 53' 32" 0	2/1/2009
Effluent Gross	37.759167	+ 37 45' 33" 0	-85.892222	- 85 53' 32" 0	2/1/2009
Effluent Gross	37.759167	+ 37 45' 33" 0	-85.892222	- 85 53' 32" 0	2/1/2009
Effluent Gross	37.759167	+ 37 45' 33" 0	-85.892222	- 85 53' 32" 0	2/1/2009
Effluent Gross	37.759167	+ 37 45' 33" 0	-85.892222	- 85 53' 32" 0	2/1/2009
Effluent Gross	37.759167	+ 37 45' 33" 0	-85.892222	- 85 53' 32" 0	2/1/2009
Effluent Gross	37.759167	+ 37 45' 33" 0	-85.892222	- 85 53' 32" 0	2/1/2009
Effluent Gross	37.759167	+ 37 45' 33" 0	-85.892222	- 85 53' 32" 0	2/1/2009
Effluent Gross	37.759167	+ 37 45' 33" 0	-85.892222	- 85 53' 32" 0	2/1/2009
Effluent Gross	37.759167	+ 37 45' 33" 0	-85.892222	- 85 53' 32" 0	2/1/2009
Effluent Gross	37.759167	+ 37 45' 33" 0	-85.892222	- 85 53' 32" 0	2/1/2009
Effluent Gross	37.759167	+ 37 45' 33" 0	-85.892222	- 85 53' 32" 0	2/1/2009
Effluent Gross	37.759167	+ 37 45' 33" 0	-85.892222	- 85 53' 32" 0	2/1/2009
Effluent Gross	37.759167	+ 37 45' 33" 0	-85.892222	- 85 53' 32" 0	2/1/2009
Effluent Gross	37.759167	+ 37 45' 33" 0	-85.892222	- 85 53' 32" 0	2/1/2009
Effluent Gross	37.759167	+ 37 45' 33" 0	-85.892222	- 85 53' 32" 0	2/1/2009
Effluent Gross	37.759167	+ 37 45' 33" 0	-85.892222	- 85 53' 32" 0	2/1/2009
Effluent Gross	37.759167	+ 37 45' 33" 0	-85.892222	- 85 53' 32" 0	2/1/2009
Effluent Gross	37.759167	+ 37 45' 33" 0	-85.892222	- 85 53' 32" 0	2/1/2009
Effluent Gross	37.759167	+ 37 45' 33" 0	-85.892222	- 85 53' 32" 0	2/1/2009
Effluent Gross	37.759167	+ 37 45' 33" 0	-85.892222	- 85 53' 32" 0	2/1/2009
Effluent Gross	37.759167	+ 37 45' 33" 0	-85.892222	- 85 53' 32" 0	2/1/2009
Effluent Gross	37.759167	+ 37 45' 33" 0	-85.892222	- 85 53' 32" 0	2/1/2009
Effluent Gross	37.759167	+ 37 45' 33" 0	-85.892222	- 85 53' 32" 0	2/1/2009
Effluent Gross	37.759167	+ 37 45' 33" 0	-85.892222	- 85 53' 32" 0	2/1/2009
Effluent Gross	37.759167	+ 37 45' 33" 0	-85.892222	- 85 53' 32" 0	2/1/2009
Effluent Gross	37.759167	+ 37 45' 33" 0	-85.892222	- 85 53' 32" 0	2/1/2009
Effluent Gross	37.759167	+ 37 45' 33" 0	-85.892222	- 85 53' 32" 0	2/1/2009
Effluent Gross	37.759167	+ 37 45' 33" 0	-85.892222	- 85 53' 32" 0	2/1/2009
Effluent Gross	37.759167	+ 37 45' 33" 0	-85.892222	- 85 53' 32" 0	2/1/2009

Effluent Gross	37.759167	+ 37 45' 33" 0	-85.892222	- 85 53' 32" 0	2/1/2009
Effluent Gross	37.759167	+ 37 45' 33" 0	-85.892222	- 85 53' 32" 0	2/1/2009
Effluent Gross	37.759167	+ 37 45' 33" 0	-85.892222	- 85 53' 32" 0	2/1/2009
Effluent Gross	37.759167	+ 37 45' 33" 0	-85.892222	- 85 53' 32" 0	2/1/2009
Effluent Gross	37.759167	+ 37 45' 33" 0	-85.892222	- 85 53' 32" 0	2/1/2009
Effluent Gross	37.759167	+ 37 45' 33" 0	-85.892222	- 85 53' 32" 0	2/1/2009
Effluent Gross	37.759167	+ 37 45' 33" 0	-85.892222	- 85 53' 32" 0	2/1/2009
Effluent Gross	37.759167	+ 37 45' 33" 0	-85.892222	- 85 53' 32" 0	2/1/2009
Effluent Gross	37.759167	+ 37 45' 33" 0	-85.892222	- 85 53' 32" 0	2/1/2009
Effluent Gross	37.759167	+ 37 45' 33" 0	-85.892222	- 85 53' 32" 0	2/1/2009
Effluent Gross	37.759167	+ 37 45' 33" 0	-85.892222	- 85 53' 32" 0	2/1/2009
Effluent Gross	37.759167	+ 37 45' 33" 0	-85.892222	- 85 53' 32" 0	2/1/2009
Effluent Gross	37.759167	+ 37 45' 33" 0	-85.892222	- 85 53' 32" 0	2/1/2009
Effluent Gross	37.759167	+ 37 45' 33" 0	-85.892222	- 85 53' 32" 0	2/1/2009
Effluent Gross	37.759167	+ 37 45' 33" 0	-85.892222	- 85 53' 32" 0	2/1/2009
Effluent Gross	37.759167	+ 37 45' 33" 0	-85.892222	- 85 53' 32" 0	2/1/2009
Effluent Gross	37.759167	+ 37 45' 33" 0	-85.892222	- 85 53' 32" 0	2/1/2009
Effluent Gross	37.759167	+ 37 45' 33" 0	-85.892222	- 85 53' 32" 0	2/1/2009
Effluent Gross	37.759167	+ 37 45' 33" 0	-85.892222	- 85 53' 32" 0	2/1/2009
Effluent Gross	37.759167	+ 37 45' 33" 0	-85.892222	- 85 53' 32" 0	2/1/2009
Effluent Gross	37.759167	+ 37 45' 33" 0	-85.892222	- 85 53' 32" 0	2/1/2009
Effluent Gross	37.759167	+ 37 45' 33" 0	-85.892222	- 85 53' 32" 0	2/1/2009
Effluent Gross	37.759167	+ 37 45' 33" 0	-85.892222	- 85 53' 32" 0	2/1/2009
Effluent Gross	37.759167	+ 37 45' 33" 0	-85.892222	- 85 53' 32" 0	2/1/2009
Effluent Gross	37.759167	+ 37 45' 33" 0	-85.892222	- 85 53' 32" 0	2/1/2009
Effluent Gross	37.759167	+ 37 45' 33" 0	-85.892222	- 85 53' 32" 0	2/1/2009
Effluent Gross	37.759167	+ 37 45' 33" 0	-85.892222	- 85 53' 32" 0	2/1/2009
Effluent Gross	37.759167	+ 37 45' 33" 0	-85.892222	- 85 53' 32" 0	2/1/2009
Effluent Gross	37.759167	+ 37 45' 33" 0	-85.892222	- 85 53' 32" 0	2/1/2009
Effluent Gross	37.759167	+ 37 45' 33" 0	-85.892222	- 85 53' 32" 0	2/1/2009
Effluent Gross	37.759167	+ 37 45' 33" 0	-85.892222	- 85 53' 32" 0	2/1/2009
Effluent Gross	37.759167	+ 37 45' 33" 0	-85.892222	- 85 53' 32" 0	2/1/2009
Effluent Gross	37.759167	+ 37 45' 33" 0	-85.892222	- 85 53' 32" 0	2/1/2009
Effluent Gross	37.759167	+ 37 45' 33" 0	-85.892222	- 85 53' 32" 0	2/1/2009
Effluent Gross	37.759167	+ 37 45' 33" 0	-85.892222	- 85 53' 32" 0	2/1/2009
Effluent Gross	37.759167	+ 37 45' 33" 0	-85.892222	- 85 53' 32" 0	2/1/2009
Effluent Gross	37.759167	+ 37 45' 33" 0	-85.892222	- 85 53' 32" 0	2/1/2009
Effluent Gross	37.759167	+ 37 45' 33" 0	-85.892222	- 85 53' 32" 0	2/1/2009
Effluent Gross	37.759167	+ 37 45' 33" 0	-85.892222	- 85 53' 32" 0	2/1/2009
Effluent Gross	37.759167	+ 37 45' 33" 0	-85.892222	- 85 53' 32" 0	2/1/2009
Effluent Gross	37.759167	+ 37 45' 33" 0	-85.892222	- 85 53' 32" 0	2/1/2009
Effluent Gross	37.759167	+ 37 45' 33" 0	-85.892222	- 85 53' 32" 0	2/1/2009
Effluent Gross	37.759167	+ 37 45' 33" 0	-85.892222	- 85 53' 32" 0	2/1/2009
Effluent Gross	37.759167	+ 37 45' 33" 0	-85.892222	- 85 53' 32" 0	2/1/2009
Effluent Gross	37.759167	+ 37 45' 33" 0	-85.892222	- 85 53' 32" 0	2/1/2009
Effluent Gross	37.759167	+ 37 45' 33" 0	-85.892222	- 85 53' 32" 0	2/1/2009
Effluent Gross	37.759167	+ 37 45' 33" 0	-85.892222	- 85 53' 32" 0	2/1/2009
Effluent Gross	37.759167	+ 37 45' 33" 0	-85.892222	- 85 53' 32" 0	2/1/2009
Effluent Gross	37.759167	+ 37 45' 33" 0	-85.892222	- 85 53' 32" 0	2/1/2009
Effluent Gross	37.759167	+ 37 45' 33" 0	-85.892222	- 85 53' 32" 0	2/1/2009
Effluent Gross	37.759167	+ 37 45' 33" 0	-85.892222	- 85 53' 32" 0	2/1/2009

Effluent Gross	37.759167	+ 37 45' 33" 0	-85.892222	- 85 53' 32" 0	2/1/2009
Effluent Gross	37.759167	+ 37 45' 33" 0	-85.892222	- 85 53' 32" 0	2/1/2009
Effluent Gross	37.759167	+ 37 45' 33" 0	-85.892222	- 85 53' 32" 0	2/1/2009
Effluent Gross	37.759167	+ 37 45' 33" 0	-85.892222	- 85 53' 32" 0	2/1/2009
Effluent Gross	37.759167	+ 37 45' 33" 0	-85.892222	- 85 53' 32" 0	2/1/2009
Effluent Gross	37.759167	+ 37 45' 33" 0	-85.892222	- 85 53' 32" 0	2/1/2009
Effluent Gross	37.759167	+ 37 45' 33" 0	-85.892222	- 85 53' 32" 0	2/1/2009
Effluent Gross	37.759167	+ 37 45' 33" 0	-85.892222	- 85 53' 32" 0	2/1/2009
Effluent Gross	37.759167	+ 37 45' 33" 0	-85.892222	- 85 53' 32" 0	2/1/2009
Effluent Gross	37.759167	+ 37 45' 33" 0	-85.892222	- 85 53' 32" 0	2/1/2009
Effluent Gross	37.759167	+ 37 45' 33" 0	-85.892222	- 85 53' 32" 0	2/1/2009
Effluent Gross	37.759167	+ 37 45' 33" 0	-85.892222	- 85 53' 32" 0	2/1/2009
Effluent Gross	37.759167	+ 37 45' 33" 0	-85.892222	- 85 53' 32" 0	2/1/2009
Effluent Gross	37.759167	+ 37 45' 33" 0	-85.892222	- 85 53' 32" 0	2/1/2009
Effluent Gross	37.759167	+ 37 45' 33" 0	-85.892222	- 85 53' 32" 0	2/1/2009
Effluent Gross	37.759167	+ 37 45' 33" 0	-85.892222	- 85 53' 32" 0	2/1/2009
Effluent Gross	37.759167	+ 37 45' 33" 0	-85.892222	- 85 53' 32" 0	2/1/2009
Effluent Gross	37.759167	+ 37 45' 33" 0	-85.892222	- 85 53' 32" 0	2/1/2009
Effluent Gross	37.759167	+ 37 45' 33" 0	-85.892222	- 85 53' 32" 0	2/1/2009
Effluent Gross	37.759167	+ 37 45' 33" 0	-85.892222	- 85 53' 32" 0	2/1/2009
Effluent Gross	37.759167	+ 37 45' 33" 0	-85.892222	- 85 53' 32" 0	2/1/2009
Effluent Gross	37.759167	+ 37 45' 33" 0	-85.892222	- 85 53' 32" 0	2/1/2009
Effluent Gross	37.759167	+ 37 45' 33" 0	-85.892222	- 85 53' 32" 0	2/1/2009
Effluent Gross	37.759167	+ 37 45' 33" 0	-85.892222	- 85 53' 32" 0	2/1/2009
Effluent Gross	37.759167	+ 37 45' 33" 0	-85.892222	- 85 53' 32" 0	2/1/2009
Effluent Gross	37.759167	+ 37 45' 33" 0	-85.892222	- 85 53' 32" 0	2/1/2009
Effluent Gross	37.759167	+ 37 45' 33" 0	-85.892222	- 85 53' 32" 0	2/1/2009
Effluent Gross	37.759167	+ 37 45' 33" 0	-85.892222	- 85 53' 32" 0	2/1/2009
Effluent Gross	37.759167	+ 37 45' 33" 0	-85.892222	- 85 53' 32" 0	2/1/2009
Effluent Gross	37.759167	+ 37 45' 33" 0	-85.892222	- 85 53' 32" 0	2/1/2009
Effluent Gross	37.759167	+ 37 45' 33" 0	-85.892222	- 85 53' 32" 0	2/1/2009
Effluent Gross	37.759167	+ 37 45' 33" 0	-85.892222	- 85 53' 32" 0	2/1/2009
Effluent Gross	37.759167	+ 37 45' 33" 0	-85.892222	- 85 53' 32" 0	2/1/2009
Effluent Gross	37.759167	+ 37 45' 33" 0	-85.892222	- 85 53' 32" 0	2/1/2009
Effluent Gross	37.759167	+ 37 45' 33" 0	-85.892222	- 85 53' 32" 0	2/1/2009
Effluent Gross	37.759167	+ 37 45' 33" 0	-85.892222	- 85 53' 32" 0	2/1/2009
Effluent Gross	37.759167	+ 37 45' 33" 0	-85.892222	- 85 53' 32" 0	2/1/2009
Effluent Gross	37.759167	+ 37 45' 33" 0	-85.892222	- 85 53' 32" 0	2/1/2009
Effluent Gross	37.759167	+ 37 45' 33" 0	-85.892222	- 85 53' 32" 0	2/1/2009
Effluent Gross	37.759167	+ 37 45' 33" 0	-85.892222	- 85 53' 32" 0	2/1/2009
Effluent Gross	37.759167	+ 37 45' 33" 0	-85.892222	- 85 53' 32" 0	2/1/2009
Effluent Gross	37.759167	+ 37 45' 33" 0	-85.892222	- 85 53' 32" 0	2/1/2009
Effluent Gross	37.759167	+ 37 45' 33" 0	-85.892222	- 85 53' 32" 0	2/1/2009
Effluent Gross	37.759167	+ 37 45' 33" 0	-85.892222	- 85 53' 32" 0	2/1/2009
Effluent Gross	37.759167	+ 37 45' 33" 0	-85.892222	- 85 53' 32" 0	2/1/2009
Effluent Gross	37.759167	+ 37 45' 33" 0	-85.892222	- 85 53' 32" 0	2/1/2009
Effluent Gross	37.759167	+ 37 45' 33" 0	-85.892222	- 85 53' 32" 0	2/1/2009
Effluent Gross	37.759167	+ 37 45' 33" 0	-85.892222	- 85 53' 32" 0	2/1/2009
Effluent Gross	37.759167	+ 37 45' 33" 0	-85.892222	- 85 53' 32" 0	2/1/2009
Effluent Gross	37.759167	+ 37 45' 33" 0	-85.892222	- 85 53' 32" 0	2/1/2009
Effluent Gross	37.759167	+ 37 45' 33" 0	-85.892222	- 85 53' 32" 0	2/1/2009

Effluent Gross	37.759167	+ 37 45' 33" 0	-85.892222	- 85 53' 32" 0	2/1/2009
Effluent Gross	37.759167	+ 37 45' 33" 0	-85.892222	- 85 53' 32" 0	2/1/2009
Effluent Gross	37.759167	+ 37 45' 33" 0	-85.892222	- 85 53' 32" 0	2/1/2009
Effluent Gross	37.759167	+ 37 45' 33" 0	-85.892222	- 85 53' 32" 0	2/1/2009
Effluent Gross	37.759167	+ 37 45' 33" 0	-85.892222	- 85 53' 32" 0	2/1/2009
Effluent Gross	37.759167	+ 37 45' 33" 0	-85.892222	- 85 53' 32" 0	2/1/2009
Effluent Gross	37.759167	+ 37 45' 33" 0	-85.892222	- 85 53' 32" 0	2/1/2009
Effluent Gross	37.759167	+ 37 45' 33" 0	-85.892222	- 85 53' 32" 0	2/1/2009
Effluent Gross	37.759167	+ 37 45' 33" 0	-85.892222	- 85 53' 32" 0	2/1/2009
Effluent Gross	37.759167	+ 37 45' 33" 0	-85.892222	- 85 53' 32" 0	2/1/2009
Effluent Gross	37.759167	+ 37 45' 33" 0	-85.892222	- 85 53' 32" 0	2/1/2009
Effluent Gross	37.759167	+ 37 45' 33" 0	-85.892222	- 85 53' 32" 0	2/1/2009
Effluent Gross	37.759167	+ 37 45' 33" 0	-85.892222	- 85 53' 32" 0	2/1/2009
Effluent Gross	37.759167	+ 37 45' 33" 0	-85.892222	- 85 53' 32" 0	2/1/2009
Effluent Gross	37.759167	+ 37 45' 33" 0	-85.892222	- 85 53' 32" 0	2/1/2009
Effluent Gross	37.759167	+ 37 45' 33" 0	-85.892222	- 85 53' 32" 0	2/1/2009
Effluent Gross	37.759167	+ 37 45' 33" 0	-85.892222	- 85 53' 32" 0	2/1/2009
Effluent Gross	37.759167	+ 37 45' 33" 0	-85.892222	- 85 53' 32" 0	2/1/2009
Effluent Gross	37.759167	+ 37 45' 33" 0	-85.892222	- 85 53' 32" 0	2/1/2009
Effluent Gross	37.759167	+ 37 45' 33" 0	-85.892222	- 85 53' 32" 0	2/1/2009
Effluent Gross	37.759167	+ 37 45' 33" 0	-85.892222	- 85 53' 32" 0	2/1/2009
Effluent Gross	37.759167	+ 37 45' 33" 0	-85.892222	- 85 53' 32" 0	2/1/2009
Effluent Gross	37.759167	+ 37 45' 33" 0	-85.892222	- 85 53' 32" 0	2/1/2009
Effluent Gross	37.759167	+ 37 45' 33" 0	-85.892222	- 85 53' 32" 0	2/1/2009
Effluent Gross	37.759167	+ 37 45' 33" 0	-85.892222	- 85 53' 32" 0	2/1/2009
Effluent Gross	37.759167	+ 37 45' 33" 0	-85.892222	- 85 53' 32" 0	2/1/2009
Effluent Gross	37.759167	+ 37 45' 33" 0	-85.892222	- 85 53' 32" 0	2/1/2009
Effluent Gross	37.759167	+ 37 45' 33" 0	-85.892222	- 85 53' 32" 0	2/1/2009
Effluent Gross	37.759167	+ 37 45' 33" 0	-85.892222	- 85 53' 32" 0	2/1/2009
Effluent Gross	37.759167	+ 37 45' 33" 0	-85.892222	- 85 53' 32" 0	2/1/2009
Effluent Gross	37.759167	+ 37 45' 33" 0	-85.892222	- 85 53' 32" 0	2/1/2009
Effluent Gross	37.759167	+ 37 45' 33" 0	-85.892222	- 85 53' 32" 0	2/1/2009
Effluent Gross	37.759167	+ 37 45' 33" 0	-85.892222	- 85 53' 32" 0	2/1/2009
Effluent Gross	37.759167	+ 37 45' 33" 0	-85.892222	- 85 53' 32" 0	2/1/2009
Effluent Gross	37.759167	+ 37 45' 33" 0	-85.892222	- 85 53' 32" 0	2/1/2009
Effluent Gross	37.759167	+ 37 45' 33" 0	-85.892222	- 85 53' 32" 0	2/1/2009
Effluent Gross	37.759167	+ 37 45' 33" 0	-85.892222	- 85 53' 32" 0	2/1/2009
Effluent Gross	37.759167	+ 37 45' 33" 0	-85.892222	- 85 53' 32" 0	2/1/2009
Effluent Gross	37.759167	+ 37 45' 33" 0	-85.892222	- 85 53' 32" 0	2/1/2009
Effluent Gross	37.759167	+ 37 45' 33" 0	-85.892222	- 85 53' 32" 0	2/1/2009
Effluent Gross	37.759167	+ 37 45' 33" 0	-85.892222	- 85 53' 32" 0	2/1/2009
Effluent Gross	37.759167	+ 37 45' 33" 0	-85.892222	- 85 53' 32" 0	2/1/2009
Effluent Gross	37.759167	+ 37 45' 33" 0	-85.892222	- 85 53' 32" 0	2/1/2009
Effluent Gross	37.759167	+ 37 45' 33" 0	-85.892222	- 85 53' 32" 0	2/1/2009
Effluent Gross	37.759167	+ 37 45' 33" 0	-85.892222	- 85 53' 32" 0	2/1/2009
Effluent Gross	37.759167	+ 37 45' 33" 0	-85.892222	- 85 53' 32" 0	2/1/2009
Effluent Gross	37.759167	+ 37 45' 33" 0	-85.892222	- 85 53' 32" 0	2/1/2009
Effluent Gross	37.759167	+ 37 45' 33" 0	-85.892222	- 85 53' 32" 0	2/1/2009
Effluent Gross	37.759167	+ 37 45' 33" 0	-85.892222	- 85 53' 32" 0	2/1/2009
Effluent Gross	37.759167	+ 37 45' 33" 0	-85.892222	- 85 53' 32" 0	2/1/2009
Effluent Gross	37.759167	+ 37 45' 33" 0	-85.892222	- 85 53' 32" 0	2/1/2009

Effluent Gross	37.759167	+ 37 45' 33" 0	-85.892222	- 85 53' 32" 0	2/1/2009
Effluent Gross	37.759167	+ 37 45' 33" 0	-85.892222	- 85 53' 32" 0	2/1/2009
Effluent Gross	37.759167	+ 37 45' 33" 0	-85.892222	- 85 53' 32" 0	2/1/2009
Effluent Gross	37.759167	+ 37 45' 33" 0	-85.892222	- 85 53' 32" 0	2/1/2009
Effluent Gross	37.759167	+ 37 45' 33" 0	-85.892222	- 85 53' 32" 0	2/1/2009
Effluent Gross	37.759167	+ 37 45' 33" 0	-85.892222	- 85 53' 32" 0	2/1/2009
Effluent Gross	37.759167	+ 37 45' 33" 0	-85.892222	- 85 53' 32" 0	2/1/2009
Effluent Gross	37.759167	+ 37 45' 33" 0	-85.892222	- 85 53' 32" 0	2/1/2009
Effluent Gross	37.759167	+ 37 45' 33" 0	-85.892222	- 85 53' 32" 0	2/1/2009
Effluent Gross	37.759167	+ 37 45' 33" 0	-85.892222	- 85 53' 32" 0	2/1/2009
Effluent Gross	37.759167	+ 37 45' 33" 0	-85.892222	- 85 53' 32" 0	2/1/2009
Effluent Gross	37.759167	+ 37 45' 33" 0	-85.892222	- 85 53' 32" 0	2/1/2009
Effluent Gross	37.759167	+ 37 45' 33" 0	-85.892222	- 85 53' 32" 0	2/1/2009
Effluent Gross	37.759167	+ 37 45' 33" 0	-85.892222	- 85 53' 32" 0	2/1/2009
Effluent Gross	37.759167	+ 37 45' 33" 0	-85.892222	- 85 53' 32" 0	2/1/2009
Effluent Gross	37.759167	+ 37 45' 33" 0	-85.892222	- 85 53' 32" 0	2/1/2009
Effluent Gross	37.759167	+ 37 45' 33" 0	-85.892222	- 85 53' 32" 0	2/1/2009
Effluent Gross	37.759167	+ 37 45' 33" 0	-85.892222	- 85 53' 32" 0	2/1/2009
Effluent Gross	37.759167	+ 37 45' 33" 0	-85.892222	- 85 53' 32" 0	2/1/2009
Effluent Gross	37.759167	+ 37 45' 33" 0	-85.892222	- 85 53' 32" 0	2/1/2009
Effluent Gross	37.759167	+ 37 45' 33" 0	-85.892222	- 85 53' 32" 0	2/1/2009
Effluent Gross	37.759167	+ 37 45' 33" 0	-85.892222	- 85 53' 32" 0	2/1/2009
Effluent Gross	37.759167	+ 37 45' 33" 0	-85.892222	- 85 53' 32" 0	2/1/2009
Effluent Gross	37.759167	+ 37 45' 33" 0	-85.892222	- 85 53' 32" 0	2/1/2009
Effluent Gross	37.759167	+ 37 45' 33" 0	-85.892222	- 85 53' 32" 0	2/1/2009
Effluent Gross	37.759167	+ 37 45' 33" 0	-85.892222	- 85 53' 32" 0	2/1/2009
Effluent Gross	37.759167	+ 37 45' 33" 0	-85.892222	- 85 53' 32" 0	2/1/2009
Effluent Gross	37.759167	+ 37 45' 33" 0	-85.892222	- 85 53' 32" 0	2/1/2009
Effluent Gross	37.759167	+ 37 45' 33" 0	-85.892222	- 85 53' 32" 0	2/1/2009
Effluent Gross	37.759167	+ 37 45' 33" 0	-85.892222	- 85 53' 32" 0	2/1/2009
Effluent Gross	37.759167	+ 37 45' 33" 0	-85.892222	- 85 53' 32" 0	2/1/2009
Effluent Gross	37.759167	+ 37 45' 33" 0	-85.892222	- 85 53' 32" 0	2/1/2009
Effluent Gross	37.759167	+ 37 45' 33" 0	-85.892222	- 85 53' 32" 0	2/1/2009
Effluent Gross	37.759167	+ 37 45' 33" 0	-85.892222	- 85 53' 32" 0	2/1/2009
Effluent Gross	37.759167	+ 37 45' 33" 0	-85.892222	- 85 53' 32" 0	2/1/2009
Effluent Gross	37.759167	+ 37 45' 33" 0	-85.892222	- 85 53' 32" 0	2/1/2009
Effluent Gross	37.759167	+ 37 45' 33" 0	-85.892222	- 85 53' 32" 0	2/1/2009
Effluent Gross	37.759167	+ 37 45' 33" 0	-85.892222	- 85 53' 32" 0	2/1/2009
Effluent Gross	37.759167	+ 37 45' 33" 0	-85.892222	- 85 53' 32" 0	2/1/2009
Effluent Gross	37.759167	+ 37 45' 33" 0	-85.892222	- 85 53' 32" 0	2/1/2009
Effluent Gross	37.759167	+ 37 45' 33" 0	-85.892222	- 85 53' 32" 0	2/1/2009
Effluent Gross	37.759167	+ 37 45' 33" 0	-85.892222	- 85 53' 32" 0	2/1/2009
Effluent Gross	37.759167	+ 37 45' 33" 0	-85.892222	- 85 53' 32" 0	2/1/2009
Effluent Gross	37.759167	+ 37 45' 33" 0	-85.892222	- 85 53' 32" 0	2/1/2009
Effluent Gross	37.759167	+ 37 45' 33" 0	-85.892222	- 85 53' 32" 0	2/1/2009
Effluent Gross	37.759167	+ 37 45' 33" 0	-85.892222	- 85 53' 32" 0	2/1/2009
Effluent Gross	37.759167	+ 37 45' 33" 0	-85.892222	- 85 53' 32" 0	2/1/2009
Effluent Gross	37.759167	+ 37 45' 33" 0	-85.892222	- 85 53' 32" 0	2/1/2009
Effluent Gross	37.759167	+ 37 45' 33" 0	-85.892222	- 85 53' 32" 0	2/1/2009
Effluent Gross	37.759167	+ 37 45' 33" 0	-85.892222	- 85 53' 32" 0	2/1/2009
Effluent Gross	37.759167	+ 37 45' 33" 0	-85.892222	- 85 53' 32" 0	2/1/2009

Effluent Gross	37.759167	+ 37 45' 33" 0	-85.892222	- 85 53' 32" 0	2/1/2009
Effluent Gross	37.759167	+ 37 45' 33" 0	-85.892222	- 85 53' 32" 0	2/1/2009
Effluent Gross	37.759167	+ 37 45' 33" 0	-85.892222	- 85 53' 32" 0	2/1/2009
Effluent Gross	37.759167	+ 37 45' 33" 0	-85.892222	- 85 53' 32" 0	2/1/2009
Effluent Gross	37.759167	+ 37 45' 33" 0	-85.892222	- 85 53' 32" 0	2/1/2009

Limit End Date	Parameter Code	Limit Season ID	Parameter Desc	nit Sample Type Co	equency of Analys
1/31/2014	00300	0	Oxygen, dissolved [	GR	01/07
1/31/2014	00300	0	Oxygen, dissolved [	GR	01/07
1/31/2014	00300	0	Oxygen, dissolved [	GR	01/07
1/31/2014	00300	0	Oxygen, dissolved [	GR	01/07
1/31/2014	00300	0	Oxygen, dissolved [	GR	01/07
1/31/2014	00300	0	Oxygen, dissolved [	GR	01/07
1/31/2014	00300	0	Oxygen, dissolved [	GR	01/07
1/31/2014	00300	0	Oxygen, dissolved [	GR	01/07
1/31/2014	00300	0	Oxygen, dissolved [	GR	01/07
1/31/2014	00300	0	Oxygen, dissolved [	GR	01/07
1/31/2014	00300	0	Oxygen, dissolved [	GR	01/07
1/31/2014	00300	0	Oxygen, dissolved [	GR	01/07
1/31/2014	00300	0	Oxygen, dissolved [	GR	01/07
1/31/2014	00300	0	Oxygen, dissolved [	GR	01/07
1/31/2014	00300	0	Oxygen, dissolved [	GR	01/07
1/31/2014	00300	0	Oxygen, dissolved [	GR	01/07
1/31/2014	00300	0	Oxygen, dissolved [	GR	01/07
1/31/2014	00300	0	Oxygen, dissolved [	GR	01/07
1/31/2014	00300	0	Oxygen, dissolved [	GR	01/07
1/31/2014	00300	0	Oxygen, dissolved [	GR	01/07
1/31/2014	00300	0	Oxygen, dissolved [	GR	01/07
1/31/2014	00300	0	Oxygen, dissolved [	GR	01/07
1/31/2014	00300	0	Oxygen, dissolved [	GR	01/07
1/31/2014	00300	0	Oxygen, dissolved [	GR	01/07
1/31/2014	00300	0	Oxygen, dissolved [	GR	01/07
1/31/2014	00300	0	Oxygen, dissolved [	GR	01/07
1/31/2014	00300	0	Oxygen, dissolved [	GR	01/07
1/31/2014	00300	0	Oxygen, dissolved [	GR	01/07
1/31/2014	00300	0	Oxygen, dissolved [	GR	01/07
1/31/2014	00300	0	Oxygen, dissolved [	GR	01/07
1/31/2014	00300	0	Oxygen, dissolved [	GR	01/07
1/31/2014	00300	0	Oxygen, dissolved [	GR	01/07
1/31/2014	00300	0	Oxygen, dissolved [	GR	01/07
1/31/2014	00300	0	Oxygen, dissolved [	GR	01/07
1/31/2014	00300	0	Oxygen, dissolved [	GR	01/07
1/31/2014	00300	0	Oxygen, dissolved [	GR	01/07
1/31/2014	00300	0	Oxygen, dissolved [	GR	01/07
1/31/2014	00300	0	Oxygen, dissolved [	GR	01/07
1/31/2014	00300	0	Oxygen, dissolved [	GR	01/07
1/31/2014	00300	0	Oxygen, dissolved [	GR	01/07
1/31/2014	00300	0	Oxygen, dissolved [	GR	01/07
1/31/2014	00300	0	Oxygen, dissolved [	GR	01/07
1/31/2014	00300	0	Oxygen, dissolved [	GR	01/07
1/31/2014	00300	0	Oxygen, dissolved [	GR	01/07
1/31/2014	00300	0	Oxygen, dissolved [	GR	01/07
1/31/2014	00300	0	Oxygen, dissolved [	GR	01/07
1/31/2014	00300	0	Oxygen, dissolved [	GR	01/07
1/31/2014	00300	0	Oxygen, dissolved [	GR	01/07
1/31/2014	00300	0	Oxygen, dissolved [	GR	01/07
1/31/2014	00300	0	Oxygen, dissolved [	GR	01/07

1/31/2014	00300	0	Oxygen, dissolved [	GR	01/07
1/31/2014	00400	0	pH	GR	01/07
1/31/2014	00400	0	pH	GR	01/07
1/31/2014	00400	0	pH	GR	01/07
1/31/2014	00400	0	pH	GR	01/07
1/31/2014	00400	0	pH	GR	01/07
1/31/2014	00400	0	pH	GR	01/07
1/31/2014	00400	0	pH	GR	01/07
1/31/2014	00400	0	pH	GR	01/07
1/31/2014	00400	0	pH	GR	01/07
1/31/2014	00400	0	pH	GR	01/07
1/31/2014	00400	0	pH	GR	01/07
1/31/2014	00400	0	pH	GR	01/07
1/31/2014	00400	0	pH	GR	01/07
1/31/2014	00400	0	pH	GR	01/07
1/31/2014	00400	0	pH	GR	01/07
1/31/2014	00400	0	pH	GR	01/07
1/31/2014	00400	0	pH	GR	01/07
1/31/2014	00400	0	pH	GR	01/07
1/31/2014	00400	0	pH	GR	01/07
1/31/2014	00400	0	pH	GR	01/07
1/31/2014	00400	0	pH	GR	01/07
1/31/2014	00400	0	pH	GR	01/07
1/31/2014	00400	0	pH	GR	01/07
1/31/2014	00400	0	pH	GR	01/07
1/31/2014	00400	0	pH	GR	01/07
1/31/2014	00400	0	pH	GR	01/07
1/31/2014	00400	0	pH	GR	01/07
1/31/2014	00400	0	pH	GR	01/07
1/31/2014	00400	0	pH	GR	01/07
1/31/2014	00400	0	pH	GR	01/07
1/31/2014	00400	0	pH	GR	01/07
1/31/2014	00400	0	pH	GR	01/07
1/31/2014	00400	0	pH	GR	01/07
1/31/2014	00400	0	pH	GR	01/07
1/31/2014	00400	0	pH	GR	01/07
1/31/2014	00400	0	pH	GR	01/07
1/31/2014	00400	0	pH	GR	01/07
1/31/2014	00400	0	pH	GR	01/07
1/31/2014	00400	0	pH	GR	01/07
1/31/2014	00400	0	pH	GR	01/07
1/31/2014	00400	0	pH	GR	01/07
1/31/2014	00400	0	pH	GR	01/07
1/31/2014	00400	0	pH	GR	01/07
1/31/2014	00400	0	pH	GR	01/07
1/31/2014	00400	0	pH	GR	01/07
1/31/2014	00400	0	pH	GR	01/07
1/31/2014	00400	0	pH	GR	01/07
1/31/2014	00400	0	pH	GR	01/07
1/31/2014	00400	0	pH	GR	01/07
1/31/2014	00400	0	pH	GR	01/07

1/31/2014	00400	0	pH	GR	01/07
1/31/2014	00400	0	pH	GR	01/07
1/31/2014	00400	0	pH	GR	01/07
1/31/2014	00400	0	pH	GR	01/07
1/31/2014	00400	0	pH	GR	01/07
1/31/2014	00400	0	pH	GR	01/07
1/31/2014	00400	0	pH	GR	01/07
1/31/2014	00400	0	pH	GR	01/07
1/31/2014	00400	0	pH	GR	01/07
1/31/2014	00400	0	pH	GR	01/07
1/31/2014	00400	0	pH	GR	01/07
1/31/2014	00400	0	pH	GR	01/07
1/31/2014	00400	0	pH	GR	01/07
1/31/2014	00400	0	pH	GR	01/07
1/31/2014	00400	0	pH	GR	01/07
1/31/2014	00400	0	pH	GR	01/07
1/31/2014	00400	0	pH	GR	01/07
1/31/2014	00400	0	pH	GR	01/07
1/31/2014	00400	0	pH	GR	01/07
1/31/2014	00400	0	pH	GR	01/07
1/31/2014	00400	0	pH	GR	01/07
1/31/2014	00400	0	pH	GR	01/07
1/31/2014	00400	0	pH	GR	01/07
1/31/2014	00400	0	pH	GR	01/07
1/31/2014	00400	0	pH	GR	01/07
1/31/2014	00400	0	pH	GR	01/07
1/31/2014	00400	0	pH	GR	01/07
1/31/2014	00400	0	pH	GR	01/07
1/31/2014	00400	0	pH	GR	01/07
1/31/2014	00400	0	pH	GR	01/07
1/31/2014	00400	0	pH	GR	01/07
1/31/2014	00400	0	pH	GR	01/07
1/31/2014	00400	0	pH	GR	01/07
1/31/2014	00400	0	pH	GR	01/07
1/31/2014	00400	0	pH	GR	01/07
1/31/2014	00400	0	pH	GR	01/07
1/31/2014	00400	0	pH	GR	01/07
1/31/2014	00400	0	pH	GR	01/07
1/31/2014	00400	0	pH	GR	01/07
1/31/2014	00400	0	pH	GR	01/07
1/31/2014	00400	0	pH	GR	01/07
1/31/2014	00400	0	pH	GR	01/07
1/31/2014	00400	0	pH	GR	01/07
1/31/2014	00400	0	pH	GR	01/07
1/31/2014	00400	0	pH	GR	01/07
1/31/2014	00400	0	pH	GR	01/07
1/31/2014	00400	0	pH	GR	01/07
1/31/2014	00400	0	pH	GR	01/07
1/31/2014	00400	0	pH	GR	01/07
1/31/2014	00400	0	pH	GR	01/07
1/31/2014	00400	0	pH	GR	01/07

1/31/2014	00400	0	pH	GR	01/07
1/31/2014	00530	0	Solids, total suspend	24	01/07
1/31/2014	00530	0	Solids, total suspend	24	01/07
1/31/2014	00530	0	Solids, total suspend	24	01/07
1/31/2014	00530	0	Solids, total suspend	24	01/07
1/31/2014	00530	0	Solids, total suspend	24	01/07
1/31/2014	00530	0	Solids, total suspend	24	01/07
1/31/2014	00530	0	Solids, total suspend	24	01/07
1/31/2014	00530	0	Solids, total suspend	24	01/07
1/31/2014	00530	0	Solids, total suspend	24	01/07
1/31/2014	00530	0	Solids, total suspend	24	01/07
1/31/2014	00530	0	Solids, total suspend	24	01/07
1/31/2014	00530	0	Solids, total suspend	24	01/07
1/31/2014	00530	0	Solids, total suspend	24	01/07
1/31/2014	00530	0	Solids, total suspend	24	01/07
1/31/2014	00530	0	Solids, total suspend	24	01/07
1/31/2014	00530	0	Solids, total suspend	24	01/07
1/31/2014	00530	0	Solids, total suspend	24	01/07
1/31/2014	00530	0	Solids, total suspend	24	01/07
1/31/2014	00530	0	Solids, total suspend	24	01/07
1/31/2014	00530	0	Solids, total suspend	24	01/07
1/31/2014	00530	0	Solids, total suspend	24	01/07
1/31/2014	00530	0	Solids, total suspend	24	01/07
1/31/2014	00530	0	Solids, total suspend	24	01/07
1/31/2014	00530	0	Solids, total suspend	24	01/07
1/31/2014	00530	0	Solids, total suspend	24	01/07
1/31/2014	00530	0	Solids, total suspend	24	01/07
1/31/2014	00530	0	Solids, total suspend	24	01/07
1/31/2014	00530	0	Solids, total suspend	24	01/07
1/31/2014	00530	0	Solids, total suspend	24	01/07
1/31/2014	00530	0	Solids, total suspend	24	01/07
1/31/2014	00530	0	Solids, total suspend	24	01/07
1/31/2014	00530	0	Solids, total suspend	24	01/07
1/31/2014	00530	0	Solids, total suspend	24	01/07
1/31/2014	00530	0	Solids, total suspend	24	01/07
1/31/2014	00530	0	Solids, total suspend	24	01/07
1/31/2014	00530	0	Solids, total suspend	24	01/07
1/31/2014	00530	0	Solids, total suspend	24	01/07
1/31/2014	00530	0	Solids, total suspend	24	01/07
1/31/2014	00530	0	Solids, total suspend	24	01/07
1/31/2014	00530	0	Solids, total suspend	24	01/07
1/31/2014	00530	0	Solids, total suspend	24	01/07
1/31/2014	00530	0	Solids, total suspend	24	01/07
1/31/2014	00530	0	Solids, total suspend	24	01/07
1/31/2014	00530	0	Solids, total suspend	24	01/07
1/31/2014	00530	0	Solids, total suspend	24	01/07
1/31/2014	00530	0	Solids, total suspend	24	01/07
1/31/2014	00530	0	Solids, total suspend	24	01/07
1/31/2014	00530	0	Solids, total suspend	24	01/07
1/31/2014	00530	0	Solids, total suspend	24	01/07
1/31/2014	00530	0	Solids, total suspend	24	01/07

1/31/2014	00530	0	Solids, total suspen	24	01/07
1/31/2014	00530	0	Solids, total suspen	24	01/07
1/31/2014	00530	0	Solids, total suspen	24	01/07
1/31/2014	00530	0	Solids, total suspen	24	01/07
1/31/2014	00530	0	Solids, total suspen	24	01/07
1/31/2014	00530	0	Solids, total suspen	24	01/07
1/31/2014	00530	0	Solids, total suspen	24	01/07
1/31/2014	00530	0	Solids, total suspen	24	01/07
1/31/2014	00530	0	Solids, total suspen	24	01/07
1/31/2014	00530	0	Solids, total suspen	24	01/07
1/31/2014	00530	0	Solids, total suspen	24	01/07
1/31/2014	00530	0	Solids, total suspen	24	01/07
1/31/2014	00530	0	Solids, total suspen	24	01/07
1/31/2014	00530	0	Solids, total suspen	24	01/07
1/31/2014	00530	0	Solids, total suspen	24	01/07
1/31/2014	00530	0	Solids, total suspen	24	01/07
1/31/2014	00530	0	Solids, total suspen	24	01/07
1/31/2014	00530	0	Solids, total suspen	24	01/07
1/31/2014	00530	0	Solids, total suspen	24	01/07
1/31/2014	00530	0	Solids, total suspen	24	01/07
1/31/2014	00530	0	Solids, total suspen	24	01/07
1/31/2014	00530	0	Solids, total suspen	24	01/07
1/31/2014	00530	0	Solids, total suspen	24	01/07
1/31/2014	00530	0	Solids, total suspen	24	01/07
1/31/2014	00530	0	Solids, total suspen	24	01/07
1/31/2014	00530	0	Solids, total suspen	24	01/07
1/31/2014	00530	0	Solids, total suspen	24	01/07
1/31/2014	00530	0	Solids, total suspen	24	01/07
1/31/2014	00530	0	Solids, total suspen	24	01/07
1/31/2014	00530	0	Solids, total suspen	24	01/07
1/31/2014	00530	0	Solids, total suspen	24	01/07
1/31/2014	00530	0	Solids, total suspen	24	01/07
1/31/2014	00530	0	Solids, total suspen	24	01/07
1/31/2014	00530	0	Solids, total suspen	24	01/07
1/31/2014	00530	0	Solids, total suspen	24	01/07
1/31/2014	00530	0	Solids, total suspen	24	01/07
1/31/2014	00530	0	Solids, total suspen	24	01/07
1/31/2014	00530	0	Solids, total suspen	24	01/07
1/31/2014	00530	0	Solids, total suspen	24	01/07
1/31/2014	00530	0	Solids, total suspen	24	01/07
1/31/2014	00530	0	Solids, total suspen	24	01/07
1/31/2014	00530	0	Solids, total suspen	24	01/07
1/31/2014	00530	0	Solids, total suspen	24	01/07
1/31/2014	00530	0	Solids, total suspen	24	01/07
1/31/2014	00530	0	Solids, total suspen	24	01/07
1/31/2014	00530	0	Solids, total suspen	24	01/07
1/31/2014	00530	0	Solids, total suspen	24	01/07
1/31/2014	00530	0	Solids, total suspen	24	01/07
1/31/2014	00530	0	Solids, total suspen	24	01/07
1/31/2014	00530	0	Solids, total suspen	24	01/07
1/31/2014	00530	0	Solids, total suspen	24	01/07

1/31/2014	00530	0	Solids, total suspend	24	01/07
1/31/2014	00530	0	Solids, total suspend	24	01/07
1/31/2014	00530	0	Solids, total suspend	24	01/07
1/31/2014	00530	0	Solids, total suspend	24	01/07
1/31/2014	00530	0	Solids, total suspend	24	01/07
1/31/2014	00530	0	Solids, total suspend	24	01/07
1/31/2014	00530	0	Solids, total suspend	24	01/07
1/31/2014	00530	0	Solids, total suspend	24	01/07
1/31/2014	00530	0	Solids, total suspend	24	01/07
1/31/2014	00530	0	Solids, total suspend	24	01/07
1/31/2014	00530	0	Solids, total suspend	24	01/07
1/31/2014	00530	0	Solids, total suspend	24	01/07
1/31/2014	00530	0	Solids, total suspend	24	01/07
1/31/2014	00530	0	Solids, total suspend	24	01/07
1/31/2014	00530	0	Solids, total suspend	24	01/07
1/31/2014	00530	0	Solids, total suspend	24	01/07
1/31/2014	00530	0	Solids, total suspend	24	01/07
1/31/2014	00530	0	Solids, total suspend	24	01/07
1/31/2014	00530	0	Solids, total suspend	24	01/07
1/31/2014	00530	0	Solids, total suspend	24	01/07
1/31/2014	00530	0	Solids, total suspend	24	01/07
1/31/2014	00530	0	Solids, total suspend	24	01/07
1/31/2014	00530	0	Solids, total suspend	24	01/07
1/31/2014	00530	0	Solids, total suspend	24	01/07
1/31/2014	00530	0	Solids, total suspend	24	01/07
1/31/2014	00530	0	Solids, total suspend	24	01/07
1/31/2014	00530	0	Solids, total suspend	24	01/07
1/31/2014	00530	0	Solids, total suspend	24	01/07
1/31/2014	00530	0	Solids, total suspend	24	01/07
1/31/2014	00530	0	Solids, total suspend	24	01/07
1/31/2014	00530	0	Solids, total suspend	24	01/07
1/31/2014	00530	0	Solids, total suspend	24	01/07
1/31/2014	00530	0	Solids, total suspend	24	01/07
1/31/2014	00530	0	Solids, total suspend	24	01/07
1/31/2014	00530	0	Solids, total suspend	24	01/07
1/31/2014	00530	0	Solids, total suspend	24	01/07
1/31/2014	00530	0	Solids, total suspend	24	01/07
1/31/2014	00530	0	Solids, total suspend	24	01/07
1/31/2014	00530	0	Solids, total suspend	24	01/07
1/31/2014	00530	0	Solids, total suspend	24	01/07
1/31/2014	00530	0	Solids, total suspend	24	01/07
1/31/2014	00530	0	Solids, total suspend	24	01/07
1/31/2014	00530	0	Solids, total suspend	24	01/07
1/31/2014	00530	0	Solids, total suspend	24	01/07
1/31/2014	00530	0	Solids, total suspend	24	01/07
1/31/2014	00530	0	Solids, total suspend	24	01/07
1/31/2014	00530	0	Solids, total suspend	24	01/07
1/31/2014	00530	0	Solids, total suspend	24	01/07
1/31/2014	00530	0	Solids, total suspend	24	01/07
1/31/2014	00530	0	Solids, total suspend	24	01/07
1/31/2014	00530	0	Solids, total suspend	24	01/07

1/31/2014	00530	0	Solids, total suspen	24	01/07
1/31/2014	00530	0	Solids, total suspen	24	01/07
1/31/2014	00530	0	Solids, total suspen	24	01/07
1/31/2014	00530	0	Solids, total suspen	24	01/07
1/31/2014	00530	0	Solids, total suspen	24	01/07
1/31/2014	00530	0	Solids, total suspen	24	01/07
1/31/2014	00530	0	Solids, total suspen	24	01/07
1/31/2014	00530	0	Solids, total suspen	24	01/07
1/31/2014	00530	0	Solids, total suspen	24	01/07
1/31/2014	00530	0	Solids, total suspen	24	01/07
1/31/2014	00530	0	Solids, total suspen	24	01/07
1/31/2014	00530	0	Solids, total suspen	24	01/07
1/31/2014	00530	0	Solids, total suspen	24	01/07
1/31/2014	00530	0	Solids, total suspen	24	01/07
1/31/2014	00530	0	Solids, total suspen	24	01/07
1/31/2014	00530	0	Solids, total suspen	24	01/07
1/31/2014	00530	0	Solids, total suspen	24	01/07
1/31/2014	00530	0	Solids, total suspen	24	01/07
1/31/2014	00530	0	Solids, total suspen	24	01/07
1/31/2014	00530	0	Solids, total suspen	24	01/07
1/31/2014	00530	0	Solids, total suspen	24	01/07
1/31/2014	00530	0	Solids, total suspen	24	01/07
1/31/2014	00530	0	Solids, total suspen	24	01/07
1/31/2014	00530	0	Solids, total suspen	24	01/07
1/31/2014	00530	0	Solids, total suspen	24	01/07
1/31/2014	00530	0	Solids, total suspen	24	01/07
1/31/2014	00530	0	Solids, total suspen	24	01/07
1/31/2014	00530	0	Solids, total suspen	24	01/07
1/31/2014	00530	0	Solids, total suspen	24	01/07
1/31/2014	00530	0	Solids, total suspen	24	01/07
1/31/2014	00530	0	Solids, total suspen	24	01/07
1/31/2014	00530	0	Solids, total suspen	24	01/07
1/31/2014	00530	0	Solids, total suspen	24	01/07
1/31/2014	00530	0	Solids, total suspen	24	01/07
1/31/2014	00530	0	Solids, total suspen	24	01/07
1/31/2014	00530	0	Solids, total suspen	24	01/07
1/31/2014	00530	0	Solids, total suspen	24	01/07
1/31/2014	00530	0	Solids, total suspen	24	01/07
1/31/2014	00530	0	Solids, total suspen	24	01/07
1/31/2014	00530	0	Solids, total suspen	24	01/07
1/31/2014	00530	0	Solids, total suspen	24	01/07
1/31/2014	00530	0	Solids, total suspen	24	01/07
1/31/2014	00530	0	Solids, total suspen	24	01/07
1/31/2014	00530	0	Solids, total suspen	24	01/07
1/31/2014	00530	0	Solids, total suspen	24	01/07
1/31/2014	00530	0	Solids, total suspen	24	01/07
1/31/2014	00530	0	Solids, total suspen	24	01/07
1/31/2014	00530	0	Solids, total suspen	24	01/07
1/31/2014	00530	0	Solids, total suspen	24	01/07
1/31/2014	00530	0	Solids, total suspen	24	01/07
1/31/2014	00530	0	Solids, total suspen	24	01/07

1/31/2014	00530	0	Solids, total suspend	24	01/07
1/31/2014	00610	1	Nitrogen, ammonia t	24	01/07
1/31/2014	00610	1	Nitrogen, ammonia t	24	01/07
1/31/2014	00610	1	Nitrogen, ammonia t	24	01/07
1/31/2014	00610	1	Nitrogen, ammonia t	24	01/07
1/31/2014	00610	1	Nitrogen, ammonia t	24	01/07
1/31/2014	00610	1	Nitrogen, ammonia t	24	01/07
1/31/2014	00610	1	Nitrogen, ammonia t	24	01/07
1/31/2014	00610	1	Nitrogen, ammonia t	24	01/07
1/31/2014	00610	1	Nitrogen, ammonia t	24	01/07
1/31/2014	00610	1	Nitrogen, ammonia t	24	01/07
1/31/2014	00610	1	Nitrogen, ammonia t	24	01/07
1/31/2014	00610	1	Nitrogen, ammonia t	24	01/07
1/31/2014	00610	1	Nitrogen, ammonia t	24	01/07
1/31/2014	00610	1	Nitrogen, ammonia t	24	01/07
1/31/2014	00610	1	Nitrogen, ammonia t	24	01/07
1/31/2014	00610	1	Nitrogen, ammonia t	24	01/07
1/31/2014	00610	1	Nitrogen, ammonia t	24	01/07
1/31/2014	00610	1	Nitrogen, ammonia t	24	01/07
1/31/2014	00610	1	Nitrogen, ammonia t	24	01/07
1/31/2014	00610	1	Nitrogen, ammonia t	24	01/07
1/31/2014	00610	1	Nitrogen, ammonia t	24	01/07
1/31/2014	00610	1	Nitrogen, ammonia t	24	01/07
1/31/2014	00610	1	Nitrogen, ammonia t	24	01/07
1/31/2014	00610	1	Nitrogen, ammonia t	24	01/07
1/31/2014	00610	1	Nitrogen, ammonia t	24	01/07
1/31/2014	00610	1	Nitrogen, ammonia t	24	01/07
1/31/2014	00610	1	Nitrogen, ammonia t	24	01/07
1/31/2014	00610	1	Nitrogen, ammonia t	24	01/07
1/31/2014	00610	1	Nitrogen, ammonia t	24	01/07
1/31/2014	00610	1	Nitrogen, ammonia t	24	01/07
1/31/2014	00610	1	Nitrogen, ammonia t	24	01/07
1/31/2014	00610	1	Nitrogen, ammonia t	24	01/07
1/31/2014	00610	1	Nitrogen, ammonia t	24	01/07
1/31/2014	00610	1	Nitrogen, ammonia t	24	01/07
1/31/2014	00610	1	Nitrogen, ammonia t	24	01/07
1/31/2014	00610	1	Nitrogen, ammonia t	24	01/07
1/31/2014	00610	1	Nitrogen, ammonia t	24	01/07
1/31/2014	00610	1	Nitrogen, ammonia t	24	01/07
1/31/2014	00610	1	Nitrogen, ammonia t	24	01/07
1/31/2014	00610	1	Nitrogen, ammonia t	24	01/07
1/31/2014	00610	1	Nitrogen, ammonia t	24	01/07
1/31/2014	00610	1	Nitrogen, ammonia t	24	01/07
1/31/2014	00610	1	Nitrogen, ammonia t	24	01/07
1/31/2014	00610	1	Nitrogen, ammonia t	24	01/07
1/31/2014	00610	1	Nitrogen, ammonia t	24	01/07
1/31/2014	00610	1	Nitrogen, ammonia t	24	01/07
1/31/2014	00610	1	Nitrogen, ammonia t	24	01/07
1/31/2014	00610	1	Nitrogen, ammonia t	24	01/07
1/31/2014	00610	1	Nitrogen, ammonia t	24	01/07
1/31/2014	00610	1	Nitrogen, ammonia t	24	01/07

1/31/2014	00610	1	Nitrogen, ammonia t	24	01/07
1/31/2014	00610	1	Nitrogen, ammonia t	24	01/07
1/31/2014	00610	1	Nitrogen, ammonia t	24	01/07
1/31/2014	00610	1	Nitrogen, ammonia t	24	01/07
1/31/2014	00610	1	Nitrogen, ammonia t	24	01/07
1/31/2014	00610	1	Nitrogen, ammonia t	24	01/07
1/31/2014	00610	1	Nitrogen, ammonia t	24	01/07
1/31/2014	00610	1	Nitrogen, ammonia t	24	01/07
1/31/2014	00610	1	Nitrogen, ammonia t	24	01/07
1/31/2014	00610	1	Nitrogen, ammonia t	24	01/07
1/31/2014	00610	1	Nitrogen, ammonia t	24	01/07
1/31/2014	00610	1	Nitrogen, ammonia t	24	01/07
1/31/2014	00610	1	Nitrogen, ammonia t	24	01/07
1/31/2014	00610	1	Nitrogen, ammonia t	24	01/07
1/31/2014	00610	1	Nitrogen, ammonia t	24	01/07
1/31/2014	00610	1	Nitrogen, ammonia t	24	01/07
1/31/2014	00610	1	Nitrogen, ammonia t	24	01/07
1/31/2014	00610	1	Nitrogen, ammonia t	24	01/07
1/31/2014	00610	1	Nitrogen, ammonia t	24	01/07
1/31/2014	00610	1	Nitrogen, ammonia t	24	01/07
1/31/2014	00610	1	Nitrogen, ammonia t	24	01/07
1/31/2014	00610	1	Nitrogen, ammonia t	24	01/07
1/31/2014	00610	1	Nitrogen, ammonia t	24	01/07
1/31/2014	00610	1	Nitrogen, ammonia t	24	01/07
1/31/2014	00610	1	Nitrogen, ammonia t	24	01/07
1/31/2014	00610	1	Nitrogen, ammonia t	24	01/07
1/31/2014	00610	1	Nitrogen, ammonia t	24	01/07
1/31/2014	00610	1	Nitrogen, ammonia t	24	01/07
1/31/2014	00610	1	Nitrogen, ammonia t	24	01/07
1/31/2014	00610	1	Nitrogen, ammonia t	24	01/07
1/31/2014	00610	1	Nitrogen, ammonia t	24	01/07
1/31/2014	00610	1	Nitrogen, ammonia t	24	01/07
1/31/2014	00610	1	Nitrogen, ammonia t	24	01/07
1/31/2014	00610	1	Nitrogen, ammonia t	24	01/07
1/31/2014	00610	1	Nitrogen, ammonia t	24	01/07
1/31/2014	00610	1	Nitrogen, ammonia t	24	01/07
1/31/2014	00610	1	Nitrogen, ammonia t	24	01/07
1/31/2014	00610	1	Nitrogen, ammonia t	24	01/07
1/31/2014	00610	1	Nitrogen, ammonia t	24	01/07
1/31/2014	00610	1	Nitrogen, ammonia t	24	01/07
1/31/2014	00610	1	Nitrogen, ammonia t	24	01/07
1/31/2014	00610	1	Nitrogen, ammonia t	24	01/07
1/31/2014	00610	1	Nitrogen, ammonia t	24	01/07
1/31/2014	00610	1	Nitrogen, ammonia t	24	01/07
1/31/2014	00610	1	Nitrogen, ammonia t	24	01/07
1/31/2014	00610	1	Nitrogen, ammonia t	24	01/07
1/31/2014	00610	1	Nitrogen, ammonia t	24	01/07
1/31/2014	00610	1	Nitrogen, ammonia t	24	01/07
1/31/2014	00610	1	Nitrogen, ammonia t	24	01/07
1/31/2014	00610	1	Nitrogen, ammonia t	24	01/07
1/31/2014	00610	1	Nitrogen, ammonia t	24	01/07

1/31/2014	00610	1	Nitrogen, ammonia t	24	01/07
1/31/2014	00610	1	Nitrogen, ammonia t	24	01/07
1/31/2014	00610	1	Nitrogen, ammonia t	24	01/07
1/31/2014	00610	2	Nitrogen, ammonia t	24	01/07
1/31/2014	00610	2	Nitrogen, ammonia t	24	01/07
1/31/2014	00610	2	Nitrogen, ammonia t	24	01/07
1/31/2014	00610	2	Nitrogen, ammonia t	24	01/07
1/31/2014	00610	2	Nitrogen, ammonia t	24	01/07
1/31/2014	00610	2	Nitrogen, ammonia t	24	01/07
1/31/2014	00610	2	Nitrogen, ammonia t	24	01/07
1/31/2014	00610	2	Nitrogen, ammonia t	24	01/07
1/31/2014	00610	2	Nitrogen, ammonia t	24	01/07
1/31/2014	00610	2	Nitrogen, ammonia t	24	01/07
1/31/2014	00610	2	Nitrogen, ammonia t	24	01/07
1/31/2014	00610	2	Nitrogen, ammonia t	24	01/07
1/31/2014	00610	2	Nitrogen, ammonia t	24	01/07
1/31/2014	00610	2	Nitrogen, ammonia t	24	01/07
1/31/2014	00610	2	Nitrogen, ammonia t	24	01/07
1/31/2014	00610	2	Nitrogen, ammonia t	24	01/07
1/31/2014	00610	2	Nitrogen, ammonia t	24	01/07
1/31/2014	00610	2	Nitrogen, ammonia t	24	01/07
1/31/2014	00610	2	Nitrogen, ammonia t	24	01/07
1/31/2014	00610	2	Nitrogen, ammonia t	24	01/07
1/31/2014	00610	2	Nitrogen, ammonia t	24	01/07
1/31/2014	00610	2	Nitrogen, ammonia t	24	01/07
1/31/2014	00610	2	Nitrogen, ammonia t	24	01/07
1/31/2014	00610	2	Nitrogen, ammonia t	24	01/07
1/31/2014	00610	2	Nitrogen, ammonia t	24	01/07
1/31/2014	00610	2	Nitrogen, ammonia t	24	01/07
1/31/2014	00610	2	Nitrogen, ammonia t	24	01/07
1/31/2014	00610	2	Nitrogen, ammonia t	24	01/07
1/31/2014	00610	2	Nitrogen, ammonia t	24	01/07
1/31/2014	00610	2	Nitrogen, ammonia t	24	01/07
1/31/2014	00610	2	Nitrogen, ammonia t	24	01/07
1/31/2014	00610	2	Nitrogen, ammonia t	24	01/07
1/31/2014	00610	2	Nitrogen, ammonia t	24	01/07
1/31/2014	00610	2	Nitrogen, ammonia t	24	01/07
1/31/2014	00610	2	Nitrogen, ammonia t	24	01/07
1/31/2014	00610	2	Nitrogen, ammonia t	24	01/07
1/31/2014	00610	2	Nitrogen, ammonia t	24	01/07
1/31/2014	00610	2	Nitrogen, ammonia t	24	01/07
1/31/2014	00610	2	Nitrogen, ammonia t	24	01/07
1/31/2014	00610	2	Nitrogen, ammonia t	24	01/07
1/31/2014	00610	2	Nitrogen, ammonia t	24	01/07
1/31/2014	00610	2	Nitrogen, ammonia t	24	01/07
1/31/2014	00610	2	Nitrogen, ammonia t	24	01/07
1/31/2014	00610	2	Nitrogen, ammonia t	24	01/07
1/31/2014	00610	2	Nitrogen, ammonia t	24	01/07
1/31/2014	00610	2	Nitrogen, ammonia t	24	01/07
1/31/2014	00610	2	Nitrogen, ammonia t	24	01/07
1/31/2014	00610	2	Nitrogen, ammonia t	24	01/07

1/31/2014	00610	2	Nitrogen, ammonia t	24	01/07
1/31/2014	00610	2	Nitrogen, ammonia t	24	01/07
1/31/2014	00610	2	Nitrogen, ammonia t	24	01/07
1/31/2014	00610	2	Nitrogen, ammonia t	24	01/07
1/31/2014	00610	2	Nitrogen, ammonia t	24	01/07
1/31/2014	00610	2	Nitrogen, ammonia t	24	01/07
1/31/2014	00610	2	Nitrogen, ammonia t	24	01/07
1/31/2014	00610	2	Nitrogen, ammonia t	24	01/07
1/31/2014	00610	2	Nitrogen, ammonia t	24	01/07
1/31/2014	00610	2	Nitrogen, ammonia t	24	01/07
1/31/2014	00610	2	Nitrogen, ammonia t	24	01/07
1/31/2014	00610	2	Nitrogen, ammonia t	24	01/07
1/31/2014	00610	2	Nitrogen, ammonia t	24	01/07
1/31/2014	00610	2	Nitrogen, ammonia t	24	01/07
1/31/2014	00610	2	Nitrogen, ammonia t	24	01/07
1/31/2014	00610	2	Nitrogen, ammonia t	24	01/07
1/31/2014	00610	2	Nitrogen, ammonia t	24	01/07
1/31/2014	00610	2	Nitrogen, ammonia t	24	01/07
1/31/2014	00610	2	Nitrogen, ammonia t	24	01/07
1/31/2014	00610	2	Nitrogen, ammonia t	24	01/07
1/31/2014	00610	2	Nitrogen, ammonia t	24	01/07
1/31/2014	00610	2	Nitrogen, ammonia t	24	01/07
1/31/2014	00610	2	Nitrogen, ammonia t	24	01/07
1/31/2014	00610	2	Nitrogen, ammonia t	24	01/07
1/31/2014	00610	2	Nitrogen, ammonia t	24	01/07
1/31/2014	00610	2	Nitrogen, ammonia t	24	01/07
1/31/2014	00610	2	Nitrogen, ammonia t	24	01/07
1/31/2014	00610	2	Nitrogen, ammonia t	24	01/07
1/31/2014	00610	2	Nitrogen, ammonia t	24	01/07
1/31/2014	00610	2	Nitrogen, ammonia t	24	01/07
1/31/2014	00610	2	Nitrogen, ammonia t	24	01/07
1/31/2014	00610	2	Nitrogen, ammonia t	24	01/07
1/31/2014	00610	2	Nitrogen, ammonia t	24	01/07
1/31/2014	00610	2	Nitrogen, ammonia t	24	01/07
1/31/2014	00610	2	Nitrogen, ammonia t	24	01/07
1/31/2014	00610	2	Nitrogen, ammonia t	24	01/07
1/31/2014	00610	2	Nitrogen, ammonia t	24	01/07
1/31/2014	00610	2	Nitrogen, ammonia t	24	01/07
1/31/2014	00610	2	Nitrogen, ammonia t	24	01/07
1/31/2014	00610	2	Nitrogen, ammonia t	24	01/07
1/31/2014	00610	2	Nitrogen, ammonia t	24	01/07
1/31/2014	00610	2	Nitrogen, ammonia t	24	01/07
1/31/2014	00610	2	Nitrogen, ammonia t	24	01/07
1/31/2014	00610	2	Nitrogen, ammonia t	24	01/07
1/31/2014	00610	2	Nitrogen, ammonia t	24	01/07
1/31/2014	00610	2	Nitrogen, ammonia t	24	01/07
1/31/2014	00610	2	Nitrogen, ammonia t	24	01/07
1/31/2014	00610	2	Nitrogen, ammonia t	24	01/07
1/31/2014	00610	2	Nitrogen, ammonia t	24	01/07
1/31/2014	00610	2	Nitrogen, ammonia t	24	01/07
1/31/2014	00610	2	Nitrogen, ammonia t	24	01/07

1/31/2014	00610	2	Nitrogen, ammonia t	24	01/07
1/31/2014	00610	2	Nitrogen, ammonia t	24	01/07
1/31/2014	00610	2	Nitrogen, ammonia t	24	01/07
1/31/2014	00610	2	Nitrogen, ammonia t	24	01/07
1/31/2014	00610	2	Nitrogen, ammonia t	24	01/07
1/31/2014	50050	0	Flow, in conduit or tl	CN	01/07
1/31/2014	50050	0	Flow, in conduit or tl	CN	01/07
1/31/2014	50050	0	Flow, in conduit or tl	CN	01/07
1/31/2014	50050	0	Flow, in conduit or tl	CN	01/07
1/31/2014	50050	0	Flow, in conduit or tl	CN	01/07
1/31/2014	50050	0	Flow, in conduit or tl	CN	01/07
1/31/2014	50050	0	Flow, in conduit or tl	CN	01/07
1/31/2014	50050	0	Flow, in conduit or tl	CN	01/07
1/31/2014	50050	0	Flow, in conduit or tl	CN	01/07
1/31/2014	50050	0	Flow, in conduit or tl	CN	01/07
1/31/2014	50050	0	Flow, in conduit or tl	CN	01/07
1/31/2014	50050	0	Flow, in conduit or tl	CN	01/07
1/31/2014	50050	0	Flow, in conduit or tl	CN	01/07
1/31/2014	50050	0	Flow, in conduit or tl	CN	01/07
1/31/2014	50050	0	Flow, in conduit or tl	CN	01/07
1/31/2014	50050	0	Flow, in conduit or tl	CN	01/07
1/31/2014	50050	0	Flow, in conduit or tl	CN	01/07
1/31/2014	50050	0	Flow, in conduit or tl	CN	01/07
1/31/2014	50050	0	Flow, in conduit or tl	CN	01/07
1/31/2014	50050	0	Flow, in conduit or tl	CN	01/07
1/31/2014	50050	0	Flow, in conduit or tl	CN	01/07
1/31/2014	50050	0	Flow, in conduit or tl	CN	01/07
1/31/2014	50050	0	Flow, in conduit or tl	CN	01/07
1/31/2014	50050	0	Flow, in conduit or tl	CN	01/07
1/31/2014	50050	0	Flow, in conduit or tl	CN	01/07
1/31/2014	50050	0	Flow, in conduit or tl	CN	01/07
1/31/2014	50050	0	Flow, in conduit or tl	CN	01/07
1/31/2014	50050	0	Flow, in conduit or tl	CN	01/07
1/31/2014	50050	0	Flow, in conduit or tl	CN	01/07
1/31/2014	50050	0	Flow, in conduit or tl	CN	01/07
1/31/2014	50050	0	Flow, in conduit or tl	CN	01/07
1/31/2014	50050	0	Flow, in conduit or tl	CN	01/07
1/31/2014	50050	0	Flow, in conduit or tl	CN	01/07
1/31/2014	50050	0	Flow, in conduit or tl	CN	01/07
1/31/2014	50050	0	Flow, in conduit or tl	CN	01/07
1/31/2014	50050	0	Flow, in conduit or tl	CN	01/07
1/31/2014	50050	0	Flow, in conduit or tl	CN	01/07
1/31/2014	50050	0	Flow, in conduit or tl	CN	01/07
1/31/2014	50050	0	Flow, in conduit or tl	CN	01/07
1/31/2014	50050	0	Flow, in conduit or tl	CN	01/07
1/31/2014	50050	0	Flow, in conduit or tl	CN	01/07
1/31/2014	50050	0	Flow, in conduit or tl	CN	01/07
1/31/2014	50050	0	Flow, in conduit or tl	CN	01/07
1/31/2014	50050	0	Flow, in conduit or tl	CN	01/07
1/31/2014	50050	0	Flow, in conduit or tl	CN	01/07
1/31/2014	50050	0	Flow, in conduit or tl	CN	01/07

1/31/2014	50050	0	Flow, in conduit or tl	CN	01/07
1/31/2014	50050	0	Flow, in conduit or tl	CN	01/07
1/31/2014	50050	0	Flow, in conduit or tl	CN	01/07
1/31/2014	50050	0	Flow, in conduit or tl	CN	01/07
1/31/2014	50050	0	Flow, in conduit or tl	CN	01/07
1/31/2014	50050	0	Flow, in conduit or tl	CN	01/07
1/31/2014	50050	0	Flow, in conduit or tl	CN	01/07
1/31/2014	50050	0	Flow, in conduit or tl	CN	01/07
1/31/2014	50050	0	Flow, in conduit or tl	CN	01/07
1/31/2014	50050	0	Flow, in conduit or tl	CN	01/07
1/31/2014	50050	0	Flow, in conduit or tl	CN	01/07
1/31/2014	50050	0	Flow, in conduit or tl	CN	01/07
1/31/2014	50050	0	Flow, in conduit or tl	CN	01/07
1/31/2014	50050	0	Flow, in conduit or tl	CN	01/07
1/31/2014	50050	0	Flow, in conduit or tl	CN	01/07
1/31/2014	50050	0	Flow, in conduit or tl	CN	01/07
1/31/2014	50050	0	Flow, in conduit or tl	CN	01/07
1/31/2014	50050	0	Flow, in conduit or tl	CN	01/07
1/31/2014	50050	0	Flow, in conduit or tl	CN	01/07
1/31/2014	50050	0	Flow, in conduit or tl	CN	01/07
1/31/2014	50050	0	Flow, in conduit or tl	CN	01/07
1/31/2014	50050	0	Flow, in conduit or tl	CN	01/07
1/31/2014	50050	0	Flow, in conduit or tl	CN	01/07
1/31/2014	50050	0	Flow, in conduit or tl	CN	01/07
1/31/2014	50050	0	Flow, in conduit or tl	CN	01/07
1/31/2014	50050	0	Flow, in conduit or tl	CN	01/07
1/31/2014	50050	0	Flow, in conduit or tl	CN	01/07
1/31/2014	50050	0	Flow, in conduit or tl	CN	01/07
1/31/2014	50050	0	Flow, in conduit or tl	CN	01/07
1/31/2014	50050	0	Flow, in conduit or tl	CN	01/07
1/31/2014	50050	0	Flow, in conduit or tl	CN	01/07
1/31/2014	50050	0	Flow, in conduit or tl	CN	01/07
1/31/2014	50050	0	Flow, in conduit or tl	CN	01/07
1/31/2014	50050	0	Flow, in conduit or tl	CN	01/07
1/31/2014	50050	0	Flow, in conduit or tl	CN	01/07
1/31/2014	50050	0	Flow, in conduit or tl	CN	01/07
1/31/2014	50050	0	Flow, in conduit or tl	CN	01/07
1/31/2014	50050	0	Flow, in conduit or tl	CN	01/07
1/31/2014	50050	0	Flow, in conduit or tl	CN	01/07
1/31/2014	50050	0	Flow, in conduit or tl	CN	01/07
1/31/2014	50050	0	Flow, in conduit or tl	CN	01/07
1/31/2014	50050	0	Flow, in conduit or tl	CN	01/07
1/31/2014	50050	0	Flow, in conduit or tl	CN	01/07
1/31/2014	50050	0	Flow, in conduit or tl	CN	01/07
1/31/2014	50050	0	Flow, in conduit or tl	CN	01/07
1/31/2014	50050	0	Flow, in conduit or tl	CN	01/07
1/31/2014	50050	0	Flow, in conduit or tl	CN	01/07
1/31/2014	50050	0	Flow, in conduit or tl	CN	01/07
1/31/2014	50050	0	Flow, in conduit or tl	CN	01/07
1/31/2014	50050	0	Flow, in conduit or tl	CN	01/07
1/31/2014	50050	0	Flow, in conduit or tl	CN	01/07

1/31/2014	50050	0	Flow, in conduit or tl	CN	01/07
1/31/2014	50050	0	Flow, in conduit or tl	CN	01/07
1/31/2014	50050	0	Flow, in conduit or tl	CN	01/07
1/31/2014	50050	0	Flow, in conduit or tl	CN	01/07
1/31/2014	50050	0	Flow, in conduit or tl	CN	01/07
1/31/2014	50060	0	Chlorine, total residu	GR	01/07
1/31/2014	50060	0	Chlorine, total residu	GR	01/07
1/31/2014	50060	0	Chlorine, total residu	GR	01/07
1/31/2014	50060	0	Chlorine, total residu	GR	01/07
1/31/2014	50060	0	Chlorine, total residu	GR	01/07
1/31/2014	50060	0	Chlorine, total residu	GR	01/07
1/31/2014	50060	0	Chlorine, total residu	GR	01/07
1/31/2014	50060	0	Chlorine, total residu	GR	01/07
1/31/2014	50060	0	Chlorine, total residu	GR	01/07
1/31/2014	50060	0	Chlorine, total residu	GR	01/07
1/31/2014	50060	0	Chlorine, total residu	GR	01/07
1/31/2014	50060	0	Chlorine, total residu	GR	01/07
1/31/2014	50060	0	Chlorine, total residu	GR	01/07
1/31/2014	50060	0	Chlorine, total residu	GR	01/07
1/31/2014	50060	0	Chlorine, total residu	GR	01/07
1/31/2014	50060	0	Chlorine, total residu	GR	01/07
1/31/2014	50060	0	Chlorine, total residu	GR	01/07
1/31/2014	50060	0	Chlorine, total residu	GR	01/07
1/31/2014	50060	0	Chlorine, total residu	GR	01/07
1/31/2014	50060	0	Chlorine, total residu	GR	01/07
1/31/2014	50060	0	Chlorine, total residu	GR	01/07
1/31/2014	50060	0	Chlorine, total residu	GR	01/07
1/31/2014	50060	0	Chlorine, total residu	GR	01/07
1/31/2014	50060	0	Chlorine, total residu	GR	01/07
1/31/2014	50060	0	Chlorine, total residu	GR	01/07
1/31/2014	50060	0	Chlorine, total residu	GR	01/07
1/31/2014	50060	0	Chlorine, total residu	GR	01/07
1/31/2014	50060	0	Chlorine, total residu	GR	01/07
1/31/2014	50060	0	Chlorine, total residu	GR	01/07
1/31/2014	50060	0	Chlorine, total residu	GR	01/07
1/31/2014	50060	0	Chlorine, total residu	GR	01/07
1/31/2014	50060	0	Chlorine, total residu	GR	01/07
1/31/2014	50060	0	Chlorine, total residu	GR	01/07
1/31/2014	50060	0	Chlorine, total residu	GR	01/07
1/31/2014	50060	0	Chlorine, total residu	GR	01/07
1/31/2014	50060	0	Chlorine, total residu	GR	01/07
1/31/2014	50060	0	Chlorine, total residu	GR	01/07
1/31/2014	50060	0	Chlorine, total residu	GR	01/07
1/31/2014	50060	0	Chlorine, total residu	GR	01/07
1/31/2014	50060	0	Chlorine, total residu	GR	01/07
1/31/2014	50060	0	Chlorine, total residu	GR	01/07
1/31/2014	50060	0	Chlorine, total residu	GR	01/07
1/31/2014	50060	0	Chlorine, total residu	GR	01/07
1/31/2014	50060	0	Chlorine, total residu	GR	01/07
1/31/2014	50060	0	Chlorine, total residu	GR	01/07
1/31/2014	50060	0	Chlorine, total residu	GR	01/07

1/31/2014	50060	0	Chlorine, total residu	GR	01/07
1/31/2014	50060	0	Chlorine, total residu	GR	01/07
1/31/2014	50060	0	Chlorine, total residu	GR	01/07
1/31/2014	50060	0	Chlorine, total residu	GR	01/07
1/31/2014	50060	0	Chlorine, total residu	GR	01/07
1/31/2014	50060	0	Chlorine, total residu	GR	01/07
1/31/2014	50060	0	Chlorine, total residu	GR	01/07
1/31/2014	50060	0	Chlorine, total residu	GR	01/07
1/31/2014	50060	0	Chlorine, total residu	GR	01/07
1/31/2014	50060	0	Chlorine, total residu	GR	01/07
1/31/2014	50060	0	Chlorine, total residu	GR	01/07
1/31/2014	50060	0	Chlorine, total residu	GR	01/07
1/31/2014	50060	0	Chlorine, total residu	GR	01/07
1/31/2014	50060	0	Chlorine, total residu	GR	01/07
1/31/2014	50060	0	Chlorine, total residu	GR	01/07
1/31/2014	50060	0	Chlorine, total residu	GR	01/07
1/31/2014	50060	0	Chlorine, total residu	GR	01/07
1/31/2014	50060	0	Chlorine, total residu	GR	01/07
1/31/2014	50060	0	Chlorine, total residu	GR	01/07
1/31/2014	50060	0	Chlorine, total residu	GR	01/07
1/31/2014	50060	0	Chlorine, total residu	GR	01/07
1/31/2014	50060	0	Chlorine, total residu	GR	01/07
1/31/2014	50060	0	Chlorine, total residu	GR	01/07
1/31/2014	50060	0	Chlorine, total residu	GR	01/07
1/31/2014	50060	0	Chlorine, total residu	GR	01/07
1/31/2014	50060	0	Chlorine, total residu	GR	01/07
1/31/2014	50060	0	Chlorine, total residu	GR	01/07
1/31/2014	50060	0	Chlorine, total residu	GR	01/07
1/31/2014	50060	0	Chlorine, total residu	GR	01/07
1/31/2014	50060	0	Chlorine, total residu	GR	01/07
1/31/2014	50060	0	Chlorine, total residu	GR	01/07
1/31/2014	50060	0	Chlorine, total residu	GR	01/07
1/31/2014	50060	0	Chlorine, total residu	GR	01/07
1/31/2014	50060	0	Chlorine, total residu	GR	01/07
1/31/2014	50060	0	Chlorine, total residu	GR	01/07
1/31/2014	50060	0	Chlorine, total residu	GR	01/07
1/31/2014	50060	0	Chlorine, total residu	GR	01/07
1/31/2014	50060	0	Chlorine, total residu	GR	01/07
1/31/2014	50060	0	Chlorine, total residu	GR	01/07
1/31/2014	50060	0	Chlorine, total residu	GR	01/07
1/31/2014	50060	0	Chlorine, total residu	GR	01/07
1/31/2014	50060	0	Chlorine, total residu	GR	01/07
1/31/2014	50060	0	Chlorine, total residu	GR	01/07
1/31/2014	50060	0	Chlorine, total residu	GR	01/07
1/31/2014	50060	0	Chlorine, total residu	GR	01/07
1/31/2014	50060	0	Chlorine, total residu	GR	01/07
1/31/2014	50060	0	Chlorine, total residu	GR	01/07
1/31/2014	50060	0	Chlorine, total residu	GR	01/07
1/31/2014	50060	0	Chlorine, total residu	GR	01/07
1/31/2014	50060	0	Chlorine, total residu	GR	01/07
1/31/2014	50060	0	Chlorine, total residu	GR	01/07

1/31/2014	50060	0	Chlorine, total residu	GR	01/07
1/31/2014	50060	0	Chlorine, total residu	GR	01/07
1/31/2014	50060	0	Chlorine, total residu	GR	01/07
1/31/2014	50060	0	Chlorine, total residu	GR	01/07
1/31/2014	50060	0	Chlorine, total residu	GR	01/07
1/31/2014	51040	0	E. coli	GR	01/07
1/31/2014	51040	0	E. coli	GR	01/07
1/31/2014	51040	0	E. coli	GR	01/07
1/31/2014	51040	0	E. coli	GR	01/07
1/31/2014	51040	0	E. coli	GR	01/07
1/31/2014	51040	0	E. coli	GR	01/07
1/31/2014	51040	0	E. coli	GR	01/07
1/31/2014	51040	0	E. coli	GR	01/07
1/31/2014	51040	0	E. coli	GR	01/07
1/31/2014	51040	0	E. coli	GR	01/07
1/31/2014	51040	0	E. coli	GR	01/07
1/31/2014	51040	0	E. coli	GR	01/07
1/31/2014	51040	0	E. coli	GR	01/07
1/31/2014	51040	0	E. coli	GR	01/07
1/31/2014	51040	0	E. coli	GR	01/07
1/31/2014	51040	0	E. coli	GR	01/07
1/31/2014	51040	0	E. coli	GR	01/07
1/31/2014	51040	0	E. coli	GR	01/07
1/31/2014	51040	0	E. coli	GR	01/07
1/31/2014	51040	0	E. coli	GR	01/07
1/31/2014	51040	0	E. coli	GR	01/07
1/31/2014	51040	0	E. coli	GR	01/07
1/31/2014	51040	0	E. coli	GR	01/07
1/31/2014	51040	0	E. coli	GR	01/07
1/31/2014	51040	0	E. coli	GR	01/07
1/31/2014	51040	0	E. coli	GR	01/07
1/31/2014	51040	0	E. coli	GR	01/07
1/31/2014	51040	0	E. coli	GR	01/07
1/31/2014	51040	0	E. coli	GR	01/07
1/31/2014	51040	0	E. coli	GR	01/07
1/31/2014	51040	0	E. coli	GR	01/07
1/31/2014	51040	0	E. coli	GR	01/07
1/31/2014	51040	0	E. coli	GR	01/07
1/31/2014	51040	0	E. coli	GR	01/07
1/31/2014	51040	0	E. coli	GR	01/07
1/31/2014	51040	0	E. coli	GR	01/07
1/31/2014	51040	0	E. coli	GR	01/07
1/31/2014	51040	0	E. coli	GR	01/07
1/31/2014	51040	0	E. coli	GR	01/07
1/31/2014	51040	0	E. coli	GR	01/07
1/31/2014	51040	0	E. coli	GR	01/07
1/31/2014	51040	0	E. coli	GR	01/07
1/31/2014	51040	0	E. coli	GR	01/07
1/31/2014	51040	0	E. coli	GR	01/07
1/31/2014	51040	0	E. coli	GR	01/07
1/31/2014	51040	0	E. coli	GR	01/07

1/31/2014	51040	0	E. coli	GR	01/07
1/31/2014	51040	0	E. coli	GR	01/07
1/31/2014	51040	0	E. coli	GR	01/07
1/31/2014	51040	0	E. coli	GR	01/07
1/31/2014	51040	0	E. coli	GR	01/07
1/31/2014	51040	0	E. coli	GR	01/07
1/31/2014	51040	0	E. coli	GR	01/07
1/31/2014	51040	0	E. coli	GR	01/07
1/31/2014	51040	0	E. coli	GR	01/07
1/31/2014	51040	0	E. coli	GR	01/07
1/31/2014	51040	0	E. coli	GR	01/07
1/31/2014	51040	0	E. coli	GR	01/07
1/31/2014	51040	0	E. coli	GR	01/07
1/31/2014	51040	0	E. coli	GR	01/07
1/31/2014	51040	0	E. coli	GR	01/07
1/31/2014	51040	0	E. coli	GR	01/07
1/31/2014	51040	0	E. coli	GR	01/07
1/31/2014	51040	0	E. coli	GR	01/07
1/31/2014	51040	0	E. coli	GR	01/07
1/31/2014	51040	0	E. coli	GR	01/07
1/31/2014	51040	0	E. coli	GR	01/07
1/31/2014	51040	0	E. coli	GR	01/07
1/31/2014	51040	0	E. coli	GR	01/07
1/31/2014	51040	0	E. coli	GR	01/07
1/31/2014	51040	0	E. coli	GR	01/07
1/31/2014	51040	0	E. coli	GR	01/07
1/31/2014	51040	0	E. coli	GR	01/07
1/31/2014	51040	0	E. coli	GR	01/07
1/31/2014	51040	0	E. coli	GR	01/07
1/31/2014	51040	0	E. coli	GR	01/07
1/31/2014	51040	0	E. coli	GR	01/07
1/31/2014	51040	0	E. coli	GR	01/07
1/31/2014	51040	0	E. coli	GR	01/07
1/31/2014	51040	0	E. coli	GR	01/07
1/31/2014	51040	0	E. coli	GR	01/07
1/31/2014	51040	0	E. coli	GR	01/07
1/31/2014	51040	0	E. coli	GR	01/07
1/31/2014	51040	0	E. coli	GR	01/07
1/31/2014	51040	0	E. coli	GR	01/07
1/31/2014	51040	0	E. coli	GR	01/07
1/31/2014	51040	0	E. coli	GR	01/07
1/31/2014	51040	0	E. coli	GR	01/07
1/31/2014	51040	0	E. coli	GR	01/07
1/31/2014	51040	0	E. coli	GR	01/07
1/31/2014	51040	0	E. coli	GR	01/07
1/31/2014	51040	0	E. coli	GR	01/07
1/31/2014	51040	0	E. coli	GR	01/07
1/31/2014	51040	0	E. coli	GR	01/07
1/31/2014	51040	0	E. coli	GR	01/07
1/31/2014	51040	0	E. coli	GR	01/07
1/31/2014	51040	0	E. coli	GR	01/07

1/31/2014	51040	0	E. coli	GR	01/07
1/31/2014	51040	0	E. coli	GR	01/07
1/31/2014	51040	0	E. coli	GR	01/07
1/31/2014	51040	0	E. coli	GR	01/07
1/31/2014	51040	0	E. coli	GR	01/07
1/31/2014	80082	0	BOD, carbonaceous	24	01/07
1/31/2014	80082	0	BOD, carbonaceous	24	01/07
1/31/2014	80082	0	BOD, carbonaceous	24	01/07
1/31/2014	80082	0	BOD, carbonaceous	24	01/07
1/31/2014	80082	0	BOD, carbonaceous	24	01/07
1/31/2014	80082	0	BOD, carbonaceous	24	01/07
1/31/2014	80082	0	BOD, carbonaceous	24	01/07
1/31/2014	80082	0	BOD, carbonaceous	24	01/07
1/31/2014	80082	0	BOD, carbonaceous	24	01/07
1/31/2014	80082	0	BOD, carbonaceous	24	01/07
1/31/2014	80082	0	BOD, carbonaceous	24	01/07
1/31/2014	80082	0	BOD, carbonaceous	24	01/07
1/31/2014	80082	0	BOD, carbonaceous	24	01/07
1/31/2014	80082	0	BOD, carbonaceous	24	01/07
1/31/2014	80082	0	BOD, carbonaceous	24	01/07
1/31/2014	80082	0	BOD, carbonaceous	24	01/07
1/31/2014	80082	0	BOD, carbonaceous	24	01/07
1/31/2014	80082	0	BOD, carbonaceous	24	01/07
1/31/2014	80082	0	BOD, carbonaceous	24	01/07
1/31/2014	80082	0	BOD, carbonaceous	24	01/07
1/31/2014	80082	0	BOD, carbonaceous	24	01/07
1/31/2014	80082	0	BOD, carbonaceous	24	01/07
1/31/2014	80082	0	BOD, carbonaceous	24	01/07
1/31/2014	80082	0	BOD, carbonaceous	24	01/07
1/31/2014	80082	0	BOD, carbonaceous	24	01/07
1/31/2014	80082	0	BOD, carbonaceous	24	01/07
1/31/2014	80082	0	BOD, carbonaceous	24	01/07
1/31/2014	80082	0	BOD, carbonaceous	24	01/07
1/31/2014	80082	0	BOD, carbonaceous	24	01/07
1/31/2014	80082	0	BOD, carbonaceous	24	01/07
1/31/2014	80082	0	BOD, carbonaceous	24	01/07
1/31/2014	80082	0	BOD, carbonaceous	24	01/07
1/31/2014	80082	0	BOD, carbonaceous	24	01/07
1/31/2014	80082	0	BOD, carbonaceous	24	01/07
1/31/2014	80082	0	BOD, carbonaceous	24	01/07
1/31/2014	80082	0	BOD, carbonaceous	24	01/07
1/31/2014	80082	0	BOD, carbonaceous	24	01/07
1/31/2014	80082	0	BOD, carbonaceous	24	01/07
1/31/2014	80082	0	BOD, carbonaceous	24	01/07
1/31/2014	80082	0	BOD, carbonaceous	24	01/07
1/31/2014	80082	0	BOD, carbonaceous	24	01/07
1/31/2014	80082	0	BOD, carbonaceous	24	01/07
1/31/2014	80082	0	BOD, carbonaceous	24	01/07
1/31/2014	80082	0	BOD, carbonaceous	24	01/07
1/31/2014	80082	0	BOD, carbonaceous	24	01/07
1/31/2014	80082	0	BOD, carbonaceous	24	01/07

1/31/2014	80082	0	BOD, carbonaceous	24	01/07
1/31/2014	80082	0	BOD, carbonaceous	24	01/07
1/31/2014	80082	0	BOD, carbonaceous	24	01/07
1/31/2014	80082	0	BOD, carbonaceous	24	01/07
1/31/2014	80082	0	BOD, carbonaceous	24	01/07
1/31/2014	80082	0	BOD, carbonaceous	24	01/07
1/31/2014	80082	0	BOD, carbonaceous	24	01/07
1/31/2014	80082	0	BOD, carbonaceous	24	01/07
1/31/2014	80082	0	BOD, carbonaceous	24	01/07
1/31/2014	80082	0	BOD, carbonaceous	24	01/07
1/31/2014	80082	0	BOD, carbonaceous	24	01/07
1/31/2014	80082	0	BOD, carbonaceous	24	01/07
1/31/2014	80082	0	BOD, carbonaceous	24	01/07
1/31/2014	80082	0	BOD, carbonaceous	24	01/07
1/31/2014	80082	0	BOD, carbonaceous	24	01/07
1/31/2014	80082	0	BOD, carbonaceous	24	01/07
1/31/2014	80082	0	BOD, carbonaceous	24	01/07
1/31/2014	80082	0	BOD, carbonaceous	24	01/07
1/31/2014	80082	0	BOD, carbonaceous	24	01/07
1/31/2014	80082	0	BOD, carbonaceous	24	01/07
1/31/2014	80082	0	BOD, carbonaceous	24	01/07
1/31/2014	80082	0	BOD, carbonaceous	24	01/07
1/31/2014	80082	0	BOD, carbonaceous	24	01/07
1/31/2014	80082	0	BOD, carbonaceous	24	01/07
1/31/2014	80082	0	BOD, carbonaceous	24	01/07
1/31/2014	80082	0	BOD, carbonaceous	24	01/07
1/31/2014	80082	0	BOD, carbonaceous	24	01/07
1/31/2014	80082	0	BOD, carbonaceous	24	01/07
1/31/2014	80082	0	BOD, carbonaceous	24	01/07
1/31/2014	80082	0	BOD, carbonaceous	24	01/07
1/31/2014	80082	0	BOD, carbonaceous	24	01/07
1/31/2014	80082	0	BOD, carbonaceous	24	01/07
1/31/2014	80082	0	BOD, carbonaceous	24	01/07
1/31/2014	80082	0	BOD, carbonaceous	24	01/07
1/31/2014	80082	0	BOD, carbonaceous	24	01/07
1/31/2014	80082	0	BOD, carbonaceous	24	01/07
1/31/2014	80082	0	BOD, carbonaceous	24	01/07
1/31/2014	80082	0	BOD, carbonaceous	24	01/07
1/31/2014	80082	0	BOD, carbonaceous	24	01/07
1/31/2014	80082	0	BOD, carbonaceous	24	01/07
1/31/2014	80082	0	BOD, carbonaceous	24	01/07
1/31/2014	80082	0	BOD, carbonaceous	24	01/07
1/31/2014	80082	0	BOD, carbonaceous	24	01/07
1/31/2014	80082	0	BOD, carbonaceous	24	01/07
1/31/2014	80082	0	BOD, carbonaceous	24	01/07
1/31/2014	80082	0	BOD, carbonaceous	24	01/07
1/31/2014	80082	0	BOD, carbonaceous	24	01/07
1/31/2014	80082	0	BOD, carbonaceous	24	01/07
1/31/2014	80082	0	BOD, carbonaceous	24	01/07
1/31/2014	80082	0	BOD, carbonaceous	24	01/07
1/31/2014	80082	0	BOD, carbonaceous	24	01/07

1/31/2014	80082	0	BOD, carbonaceous	24	01/07
1/31/2014	80082	0	BOD, carbonaceous	24	01/07
1/31/2014	80082	0	BOD, carbonaceous	24	01/07
1/31/2014	80082	0	BOD, carbonaceous	24	01/07
1/31/2014	80082	0	BOD, carbonaceous	24	01/07
1/31/2014	80082	0	BOD, carbonaceous	24	01/07
1/31/2014	80082	0	BOD, carbonaceous	24	01/07
1/31/2014	80082	0	BOD, carbonaceous	24	01/07
1/31/2014	80082	0	BOD, carbonaceous	24	01/07
1/31/2014	80082	0	BOD, carbonaceous	24	01/07
1/31/2014	80082	0	BOD, carbonaceous	24	01/07
1/31/2014	80082	0	BOD, carbonaceous	24	01/07
1/31/2014	80082	0	BOD, carbonaceous	24	01/07
1/31/2014	80082	0	BOD, carbonaceous	24	01/07
1/31/2014	80082	0	BOD, carbonaceous	24	01/07
1/31/2014	80082	0	BOD, carbonaceous	24	01/07
1/31/2014	80082	0	BOD, carbonaceous	24	01/07
1/31/2014	80082	0	BOD, carbonaceous	24	01/07
1/31/2014	80082	0	BOD, carbonaceous	24	01/07
1/31/2014	80082	0	BOD, carbonaceous	24	01/07
1/31/2014	80082	0	BOD, carbonaceous	24	01/07
1/31/2014	80082	0	BOD, carbonaceous	24	01/07
1/31/2014	80082	0	BOD, carbonaceous	24	01/07
1/31/2014	80082	0	BOD, carbonaceous	24	01/07
1/31/2014	80082	0	BOD, carbonaceous	24	01/07
1/31/2014	80082	0	BOD, carbonaceous	24	01/07
1/31/2014	80082	0	BOD, carbonaceous	24	01/07
1/31/2014	80082	0	BOD, carbonaceous	24	01/07
1/31/2014	80082	0	BOD, carbonaceous	24	01/07
1/31/2014	80082	0	BOD, carbonaceous	24	01/07
1/31/2014	80082	0	BOD, carbonaceous	24	01/07
1/31/2014	80082	0	BOD, carbonaceous	24	01/07
1/31/2014	80082	0	BOD, carbonaceous	24	01/07
1/31/2014	80082	0	BOD, carbonaceous	24	01/07
1/31/2014	80082	0	BOD, carbonaceous	24	01/07
1/31/2014	80082	0	BOD, carbonaceous	24	01/07
1/31/2014	80082	0	BOD, carbonaceous	24	01/07
1/31/2014	80082	0	BOD, carbonaceous	24	01/07
1/31/2014	80082	0	BOD, carbonaceous	24	01/07
1/31/2014	80082	0	BOD, carbonaceous	24	01/07
1/31/2014	80082	0	BOD, carbonaceous	24	01/07
1/31/2014	80082	0	BOD, carbonaceous	24	01/07
1/31/2014	80082	0	BOD, carbonaceous	24	01/07
1/31/2014	80082	0	BOD, carbonaceous	24	01/07
1/31/2014	80082	0	BOD, carbonaceous	24	01/07
1/31/2014	80082	0	BOD, carbonaceous	24	01/07
1/31/2014	80082	0	BOD, carbonaceous	24	01/07
1/31/2014	80082	0	BOD, carbonaceous	24	01/07
1/31/2014	80082	0	BOD, carbonaceous	24	01/07
1/31/2014	80082	0	BOD, carbonaceous	24	01/07
1/31/2014	80082	0	BOD, carbonaceous	24	01/07

1/31/2014	80082	0	BOD, carbonaceous	24	01/07
1/31/2014	80082	0	BOD, carbonaceous	24	01/07
1/31/2014	80082	0	BOD, carbonaceous	24	01/07
1/31/2014	80082	0	BOD, carbonaceous	24	01/07
1/31/2014	80082	0	BOD, carbonaceous	24	01/07
1/31/2014	80082	0	BOD, carbonaceous	24	01/07
1/31/2014	80082	0	BOD, carbonaceous	24	01/07
1/31/2014	80082	0	BOD, carbonaceous	24	01/07
1/31/2014	80082	0	BOD, carbonaceous	24	01/07
1/31/2014	80082	0	BOD, carbonaceous	24	01/07
1/31/2014	80082	0	BOD, carbonaceous	24	01/07
1/31/2014	80082	0	BOD, carbonaceous	24	01/07
1/31/2014	80082	0	BOD, carbonaceous	24	01/07
1/31/2014	80082	0	BOD, carbonaceous	24	01/07
1/31/2014	80082	0	BOD, carbonaceous	24	01/07
1/31/2014	80082	0	BOD, carbonaceous	24	01/07
1/31/2014	80082	0	BOD, carbonaceous	24	01/07
1/31/2014	80082	0	BOD, carbonaceous	24	01/07
1/31/2014	80082	0	BOD, carbonaceous	24	01/07
1/31/2014	80082	0	BOD, carbonaceous	24	01/07
1/31/2014	80082	0	BOD, carbonaceous	24	01/07
1/31/2014	80082	0	BOD, carbonaceous	24	01/07
1/31/2014	80082	0	BOD, carbonaceous	24	01/07
1/31/2014	80082	0	BOD, carbonaceous	24	01/07
1/31/2014	80082	0	BOD, carbonaceous	24	01/07
1/31/2014	80082	0	BOD, carbonaceous	24	01/07
1/31/2014	80082	0	BOD, carbonaceous	24	01/07
1/31/2014	80082	0	BOD, carbonaceous	24	01/07
1/31/2014	80082	0	BOD, carbonaceous	24	01/07
1/31/2014	80082	0	BOD, carbonaceous	24	01/07
1/31/2014	80082	0	BOD, carbonaceous	24	01/07
1/31/2014	80082	0	BOD, carbonaceous	24	01/07
1/31/2014	80082	0	BOD, carbonaceous	24	01/07
1/31/2014	80082	0	BOD, carbonaceous	24	01/07
1/31/2014	80082	0	BOD, carbonaceous	24	01/07
1/31/2014	80082	0	BOD, carbonaceous	24	01/07
1/31/2014	80082	0	BOD, carbonaceous	24	01/07
1/31/2014	80082	0	BOD, carbonaceous	24	01/07
1/31/2014	80082	0	BOD, carbonaceous	24	01/07
1/31/2014	80082	0	BOD, carbonaceous	24	01/07
1/31/2014	80082	0	BOD, carbonaceous	24	01/07
1/31/2014	80082	0	BOD, carbonaceous	24	01/07
1/31/2014	80082	0	BOD, carbonaceous	24	01/07
1/31/2014	80082	0	BOD, carbonaceous	24	01/07
1/31/2014	80082	0	BOD, carbonaceous	24	01/07
1/31/2014	80082	0	BOD, carbonaceous	24	01/07
1/31/2014	80082	0	BOD, carbonaceous	24	01/07
1/31/2014	80082	0	BOD, carbonaceous	24	01/07
1/31/2014	80082	0	BOD, carbonaceous	24	01/07
1/31/2014	80082	0	BOD, carbonaceous	24	01/07
1/31/2014	80082	0	BOD, carbonaceous	24	01/07

1/31/2014	80082	0	BOD, carbonaceous	24	01/07
1/31/2014	80082	0	BOD, carbonaceous	24	01/07
1/31/2014	80082	0	BOD, carbonaceous	24	01/07
1/31/2014	80082	0	BOD, carbonaceous	24	01/07
1/31/2014	80082	0	BOD, carbonaceous	24	01/07

requency of Analys	Limit Unit Code	Limit Unit Desc	imit Unit Short Des	Limit Value	tatistical Base Cod
Weekly	19	Milligrams per Liter	mg/L	7.	IB
Weekly	19	Milligrams per Liter	mg/L	7.	IB
Weekly	19	Milligrams per Liter	mg/L	7.	IB
Weekly	19	Milligrams per Liter	mg/L	7.	IB
Weekly	19	Milligrams per Liter	mg/L	7.	IB
Weekly	19	Milligrams per Liter	mg/L	7.	IB
Weekly	19	Milligrams per Liter	mg/L	7.	IB
Weekly	19	Milligrams per Liter	mg/L	7.	IB
Weekly	19	Milligrams per Liter	mg/L	7.	IB
Weekly	19	Milligrams per Liter	mg/L	7.	IB
Weekly	19	Milligrams per Liter	mg/L	7.	IB
Weekly	19	Milligrams per Liter	mg/L	7.	IB
Weekly	19	Milligrams per Liter	mg/L	7.	IB
Weekly	19	Milligrams per Liter	mg/L	7.	IB
Weekly	19	Milligrams per Liter	mg/L	7.	IB
Weekly	19	Milligrams per Liter	mg/L	7.	IB
Weekly	19	Milligrams per Liter	mg/L	7.	IB
Weekly	19	Milligrams per Liter	mg/L	7.	IB
Weekly	19	Milligrams per Liter	mg/L	7.	IB
Weekly	19	Milligrams per Liter	mg/L	7.	IB
Weekly	19	Milligrams per Liter	mg/L	7.	IB
Weekly	19	Milligrams per Liter	mg/L	7.	IB
Weekly	19	Milligrams per Liter	mg/L	7.	IB
Weekly	19	Milligrams per Liter	mg/L	7.	IB
Weekly	19	Milligrams per Liter	mg/L	7.	IB
Weekly	19	Milligrams per Liter	mg/L	7.	IB
Weekly	19	Milligrams per Liter	mg/L	7.	IB
Weekly	19	Milligrams per Liter	mg/L	7.	IB
Weekly	19	Milligrams per Liter	mg/L	7.	IB
Weekly	19	Milligrams per Liter	mg/L	7.	IB
Weekly	19	Milligrams per Liter	mg/L	7.	IB
Weekly	19	Milligrams per Liter	mg/L	7.	IB
Weekly	19	Milligrams per Liter	mg/L	7.	IB
Weekly	19	Milligrams per Liter	mg/L	7.	IB
Weekly	19	Milligrams per Liter	mg/L	7.	IB
Weekly	19	Milligrams per Liter	mg/L	7.	IB
Weekly	19	Milligrams per Liter	mg/L	7.	IB
Weekly	19	Milligrams per Liter	mg/L	7.	IB
Weekly	19	Milligrams per Liter	mg/L	7.	IB
Weekly	19	Milligrams per Liter	mg/L	7.	IB
Weekly	19	Milligrams per Liter	mg/L	7.	IB
Weekly	19	Milligrams per Liter	mg/L	7.	IB
Weekly	19	Milligrams per Liter	mg/L	7.	IB
Weekly	19	Milligrams per Liter	mg/L	7.	IB
Weekly	19	Milligrams per Liter	mg/L	7.	IB
Weekly	19	Milligrams per Liter	mg/L	7.	IB
Weekly	19	Milligrams per Liter	mg/L	7.	IB
Weekly	19	Milligrams per Liter	mg/L	7.	IB
Weekly	19	Milligrams per Liter	mg/L	7.	IB
Weekly	19	Milligrams per Liter	mg/L	7.	IB

Weekly	19	Milligrams per Liter	mg/L	7.	IB
Weekly	12	Standard Units	SU	6.	ME
Weekly	12	Standard Units	SU	6.	ME
Weekly	12	Standard Units	SU	6.	ME
Weekly	12	Standard Units	SU	6.	ME
Weekly	12	Standard Units	SU	6.	ME
Weekly	12	Standard Units	SU	6.	ME
Weekly	12	Standard Units	SU	6.	ME
Weekly	12	Standard Units	SU	6.	ME
Weekly	12	Standard Units	SU	6.	ME
Weekly	12	Standard Units	SU	6.	ME
Weekly	12	Standard Units	SU	6.	ME
Weekly	12	Standard Units	SU	6.	ME
Weekly	12	Standard Units	SU	6.	ME
Weekly	12	Standard Units	SU	6.	ME
Weekly	12	Standard Units	SU	6.	ME
Weekly	12	Standard Units	SU	6.	ME
Weekly	12	Standard Units	SU	6.	ME
Weekly	12	Standard Units	SU	6.	ME
Weekly	12	Standard Units	SU	6.	ME
Weekly	12	Standard Units	SU	6.	ME
Weekly	12	Standard Units	SU	6.	ME
Weekly	12	Standard Units	SU	6.	ME
Weekly	12	Standard Units	SU	6.	ME
Weekly	12	Standard Units	SU	6.	ME
Weekly	12	Standard Units	SU	6.	ME
Weekly	12	Standard Units	SU	6.	ME
Weekly	12	Standard Units	SU	6.	ME
Weekly	12	Standard Units	SU	6.	ME
Weekly	12	Standard Units	SU	6.	ME
Weekly	12	Standard Units	SU	6.	ME
Weekly	12	Standard Units	SU	6.	ME
Weekly	12	Standard Units	SU	6.	ME
Weekly	12	Standard Units	SU	6.	ME
Weekly	12	Standard Units	SU	6.	ME
Weekly	12	Standard Units	SU	6.	ME
Weekly	12	Standard Units	SU	6.	ME
Weekly	12	Standard Units	SU	6.	ME
Weekly	12	Standard Units	SU	6.	ME
Weekly	12	Standard Units	SU	6.	ME
Weekly	12	Standard Units	SU	6.	ME
Weekly	12	Standard Units	SU	6.	ME
Weekly	12	Standard Units	SU	6.	ME
Weekly	12	Standard Units	SU	6.	ME
Weekly	12	Standard Units	SU	6.	ME
Weekly	12	Standard Units	SU	6.	ME
Weekly	12	Standard Units	SU	6.	ME
Weekly	12	Standard Units	SU	6.	ME
Weekly	12	Standard Units	SU	6.	ME
Weekly	12	Standard Units	SU	6.	ME
Weekly	12	Standard Units	SU	6.	ME

Weekly	12	Standard Units	SU	6.	ME
Weekly	12	Standard Units	SU	9.	MB
Weekly	12	Standard Units	SU	9.	MB
Weekly	12	Standard Units	SU	9.	MB
Weekly	12	Standard Units	SU	9.	MB
Weekly	12	Standard Units	SU	9.	MB
Weekly	12	Standard Units	SU	9.	MB
Weekly	12	Standard Units	SU	9.	MB
Weekly	12	Standard Units	SU	9.	MB
Weekly	12	Standard Units	SU	9.	MB
Weekly	12	Standard Units	SU	9.	MB
Weekly	12	Standard Units	SU	9.	MB
Weekly	12	Standard Units	SU	9.	MB
Weekly	12	Standard Units	SU	9.	MB
Weekly	12	Standard Units	SU	9.	MB
Weekly	12	Standard Units	SU	9.	MB
Weekly	12	Standard Units	SU	9.	MB
Weekly	12	Standard Units	SU	9.	MB
Weekly	12	Standard Units	SU	9.	MB
Weekly	12	Standard Units	SU	9.	MB
Weekly	12	Standard Units	SU	9.	MB
Weekly	12	Standard Units	SU	9.	MB
Weekly	12	Standard Units	SU	9.	MB
Weekly	12	Standard Units	SU	9.	MB
Weekly	12	Standard Units	SU	9.	MB
Weekly	12	Standard Units	SU	9.	MB
Weekly	12	Standard Units	SU	9.	MB
Weekly	12	Standard Units	SU	9.	MB
Weekly	12	Standard Units	SU	9.	MB
Weekly	12	Standard Units	SU	9.	MB
Weekly	12	Standard Units	SU	9.	MB
Weekly	12	Standard Units	SU	9.	MB
Weekly	12	Standard Units	SU	9.	MB
Weekly	12	Standard Units	SU	9.	MB
Weekly	12	Standard Units	SU	9.	MB
Weekly	12	Standard Units	SU	9.	MB
Weekly	12	Standard Units	SU	9.	MB
Weekly	12	Standard Units	SU	9.	MB
Weekly	12	Standard Units	SU	9.	MB
Weekly	12	Standard Units	SU	9.	MB
Weekly	12	Standard Units	SU	9.	MB
Weekly	12	Standard Units	SU	9.	MB
Weekly	12	Standard Units	SU	9.	MB
Weekly	12	Standard Units	SU	9.	MB
Weekly	12	Standard Units	SU	9.	MB
Weekly	12	Standard Units	SU	9.	MB
Weekly	12	Standard Units	SU	9.	MB
Weekly	12	Standard Units	SU	9.	MB
Weekly	12	Standard Units	SU	9.	MB
Weekly	12	Standard Units	SU	9.	MB
Weekly	12	Standard Units	SU	9.	MB
Weekly	12	Standard Units	SU	9.	MB

Weekly	12	Standard Units	SU	9.	MB
Weekly	19	Milligrams per Liter	mg/L	30.	3C
Weekly	19	Milligrams per Liter	mg/L	30.	3C
Weekly	19	Milligrams per Liter	mg/L	30.	3C
Weekly	19	Milligrams per Liter	mg/L	30.	3C
Weekly	19	Milligrams per Liter	mg/L	30.	3C
Weekly	19	Milligrams per Liter	mg/L	30.	3C
Weekly	19	Milligrams per Liter	mg/L	30.	3C
Weekly	19	Milligrams per Liter	mg/L	30.	3C
Weekly	19	Milligrams per Liter	mg/L	30.	3C
Weekly	19	Milligrams per Liter	mg/L	30.	3C
Weekly	19	Milligrams per Liter	mg/L	30.	3C
Weekly	19	Milligrams per Liter	mg/L	30.	3C
Weekly	19	Milligrams per Liter	mg/L	30.	3C
Weekly	19	Milligrams per Liter	mg/L	30.	3C
Weekly	19	Milligrams per Liter	mg/L	30.	3C
Weekly	19	Milligrams per Liter	mg/L	30.	3C
Weekly	19	Milligrams per Liter	mg/L	30.	3C
Weekly	19	Milligrams per Liter	mg/L	30.	3C
Weekly	19	Milligrams per Liter	mg/L	30.	3C
Weekly	19	Milligrams per Liter	mg/L	30.	3C
Weekly	19	Milligrams per Liter	mg/L	30.	3C
Weekly	19	Milligrams per Liter	mg/L	30.	3C
Weekly	19	Milligrams per Liter	mg/L	30.	3C
Weekly	19	Milligrams per Liter	mg/L	30.	3C
Weekly	19	Milligrams per Liter	mg/L	30.	3C
Weekly	19	Milligrams per Liter	mg/L	30.	3C
Weekly	19	Milligrams per Liter	mg/L	30.	3C
Weekly	19	Milligrams per Liter	mg/L	30.	3C
Weekly	19	Milligrams per Liter	mg/L	30.	3C
Weekly	19	Milligrams per Liter	mg/L	30.	3C
Weekly	19	Milligrams per Liter	mg/L	30.	3C
Weekly	19	Milligrams per Liter	mg/L	30.	3C
Weekly	19	Milligrams per Liter	mg/L	30.	3C
Weekly	19	Milligrams per Liter	mg/L	30.	3C
Weekly	19	Milligrams per Liter	mg/L	30.	3C
Weekly	19	Milligrams per Liter	mg/L	30.	3C
Weekly	19	Milligrams per Liter	mg/L	30.	3C
Weekly	19	Milligrams per Liter	mg/L	30.	3C
Weekly	19	Milligrams per Liter	mg/L	30.	3C
Weekly	19	Milligrams per Liter	mg/L	30.	3C
Weekly	19	Milligrams per Liter	mg/L	30.	3C
Weekly	19	Milligrams per Liter	mg/L	30.	3C
Weekly	19	Milligrams per Liter	mg/L	30.	3C
Weekly	19	Milligrams per Liter	mg/L	30.	3C
Weekly	19	Milligrams per Liter	mg/L	30.	3C
Weekly	19	Milligrams per Liter	mg/L	30.	3C
Weekly	19	Milligrams per Liter	mg/L	30.	3C
Weekly	19	Milligrams per Liter	mg/L	30.	3C
Weekly	19	Milligrams per Liter	mg/L	30.	3C
Weekly	19	Milligrams per Liter	mg/L	30.	3C

Weekly	19	Milligrams per Liter	mg/L	30.	3C
Weekly	19	Milligrams per Liter	mg/L	45.	MS
Weekly	19	Milligrams per Liter	mg/L	45.	MS
Weekly	19	Milligrams per Liter	mg/L	45.	MS
Weekly	19	Milligrams per Liter	mg/L	45.	MS
Weekly	19	Milligrams per Liter	mg/L	45.	MS
Weekly	19	Milligrams per Liter	mg/L	45.	MS
Weekly	19	Milligrams per Liter	mg/L	45.	MS
Weekly	19	Milligrams per Liter	mg/L	45.	MS
Weekly	19	Milligrams per Liter	mg/L	45.	MS
Weekly	19	Milligrams per Liter	mg/L	45.	MS
Weekly	19	Milligrams per Liter	mg/L	45.	MS
Weekly	19	Milligrams per Liter	mg/L	45.	MS
Weekly	19	Milligrams per Liter	mg/L	45.	MS
Weekly	19	Milligrams per Liter	mg/L	45.	MS
Weekly	19	Milligrams per Liter	mg/L	45.	MS
Weekly	19	Milligrams per Liter	mg/L	45.	MS
Weekly	19	Milligrams per Liter	mg/L	45.	MS
Weekly	19	Milligrams per Liter	mg/L	45.	MS
Weekly	19	Milligrams per Liter	mg/L	45.	MS
Weekly	19	Milligrams per Liter	mg/L	45.	MS
Weekly	19	Milligrams per Liter	mg/L	45.	MS
Weekly	19	Milligrams per Liter	mg/L	45.	MS
Weekly	19	Milligrams per Liter	mg/L	45.	MS
Weekly	19	Milligrams per Liter	mg/L	45.	MS
Weekly	19	Milligrams per Liter	mg/L	45.	MS
Weekly	19	Milligrams per Liter	mg/L	45.	MS
Weekly	19	Milligrams per Liter	mg/L	45.	MS
Weekly	19	Milligrams per Liter	mg/L	45.	MS
Weekly	19	Milligrams per Liter	mg/L	45.	MS
Weekly	19	Milligrams per Liter	mg/L	45.	MS
Weekly	19	Milligrams per Liter	mg/L	45.	MS
Weekly	19	Milligrams per Liter	mg/L	45.	MS
Weekly	19	Milligrams per Liter	mg/L	45.	MS
Weekly	19	Milligrams per Liter	mg/L	45.	MS
Weekly	19	Milligrams per Liter	mg/L	45.	MS
Weekly	19	Milligrams per Liter	mg/L	45.	MS
Weekly	19	Milligrams per Liter	mg/L	45.	MS
Weekly	19	Milligrams per Liter	mg/L	45.	MS
Weekly	19	Milligrams per Liter	mg/L	45.	MS
Weekly	19	Milligrams per Liter	mg/L	45.	MS
Weekly	19	Milligrams per Liter	mg/L	45.	MS
Weekly	19	Milligrams per Liter	mg/L	45.	MS
Weekly	19	Milligrams per Liter	mg/L	45.	MS
Weekly	19	Milligrams per Liter	mg/L	45.	MS
Weekly	19	Milligrams per Liter	mg/L	45.	MS
Weekly	19	Milligrams per Liter	mg/L	45.	MS
Weekly	19	Milligrams per Liter	mg/L	45.	MS
Weekly	19	Milligrams per Liter	mg/L	45.	MS
Weekly	19	Milligrams per Liter	mg/L	45.	MS
Weekly	19	Milligrams per Liter	mg/L	45.	MS

Weekly	19	Milligrams per Liter	mg/L	45.	MS
Weekly	26	Pounds per Day	lb/d	13.8	3C
Weekly	26	Pounds per Day	lb/d	13.8	3C
Weekly	26	Pounds per Day	lb/d	13.8	3C
Weekly	26	Pounds per Day	lb/d	13.8	3C
Weekly	26	Pounds per Day	lb/d	13.8	3C
Weekly	26	Pounds per Day	lb/d	13.8	3C
Weekly	26	Pounds per Day	lb/d	13.8	3C
Weekly	26	Pounds per Day	lb/d	13.8	3C
Weekly	26	Pounds per Day	lb/d	13.8	3C
Weekly	26	Pounds per Day	lb/d	13.8	3C
Weekly	26	Pounds per Day	lb/d	13.8	3C
Weekly	26	Pounds per Day	lb/d	13.8	3C
Weekly	26	Pounds per Day	lb/d	13.8	3C
Weekly	26	Pounds per Day	lb/d	13.8	3C
Weekly	26	Pounds per Day	lb/d	13.8	3C
Weekly	26	Pounds per Day	lb/d	13.8	3C
Weekly	26	Pounds per Day	lb/d	13.8	3C
Weekly	26	Pounds per Day	lb/d	13.8	3C
Weekly	26	Pounds per Day	lb/d	13.8	3C
Weekly	26	Pounds per Day	lb/d	13.8	3C
Weekly	26	Pounds per Day	lb/d	13.8	3C
Weekly	26	Pounds per Day	lb/d	13.8	3C
Weekly	26	Pounds per Day	lb/d	13.8	3C
Weekly	26	Pounds per Day	lb/d	13.8	3C
Weekly	26	Pounds per Day	lb/d	13.8	3C
Weekly	26	Pounds per Day	lb/d	13.8	3C
Weekly	26	Pounds per Day	lb/d	13.8	3C
Weekly	26	Pounds per Day	lb/d	13.8	3C
Weekly	26	Pounds per Day	lb/d	13.8	3C
Weekly	26	Pounds per Day	lb/d	13.8	3C
Weekly	26	Pounds per Day	lb/d	13.8	3C
Weekly	26	Pounds per Day	lb/d	13.8	3C
Weekly	26	Pounds per Day	lb/d	13.8	3C
Weekly	26	Pounds per Day	lb/d	13.8	3C
Weekly	26	Pounds per Day	lb/d	13.8	3C
Weekly	26	Pounds per Day	lb/d	13.8	3C
Weekly	26	Pounds per Day	lb/d	13.8	3C
Weekly	26	Pounds per Day	lb/d	13.8	3C
Weekly	26	Pounds per Day	lb/d	13.8	3C
Weekly	26	Pounds per Day	lb/d	13.8	3C
Weekly	26	Pounds per Day	lb/d	13.8	3C
Weekly	26	Pounds per Day	lb/d	13.8	3C
Weekly	26	Pounds per Day	lb/d	13.8	3C
Weekly	26	Pounds per Day	lb/d	13.8	3C
Weekly	26	Pounds per Day	lb/d	13.8	3C
Weekly	26	Pounds per Day	lb/d	13.8	3C
Weekly	26	Pounds per Day	lb/d	13.8	3C
Weekly	26	Pounds per Day	lb/d	13.8	3C
Weekly	26	Pounds per Day	lb/d	13.8	3C
Weekly	26	Pounds per Day	lb/d	13.8	3C

Weekly	26	Pounds per Day	lb/d	13.8	3C
Weekly	26	Pounds per Day	lb/d	20.07	MS
Weekly	26	Pounds per Day	lb/d	20.07	MS
Weekly	26	Pounds per Day	lb/d	20.07	MS
Weekly	26	Pounds per Day	lb/d	20.07	MS
Weekly	26	Pounds per Day	lb/d	20.07	MS
Weekly	26	Pounds per Day	lb/d	20.07	MS
Weekly	26	Pounds per Day	lb/d	20.07	MS
Weekly	26	Pounds per Day	lb/d	20.07	MS
Weekly	26	Pounds per Day	lb/d	20.07	MS
Weekly	26	Pounds per Day	lb/d	20.07	MS
Weekly	26	Pounds per Day	lb/d	20.07	MS
Weekly	26	Pounds per Day	lb/d	20.07	MS
Weekly	26	Pounds per Day	lb/d	20.07	MS
Weekly	26	Pounds per Day	lb/d	20.07	MS
Weekly	26	Pounds per Day	lb/d	20.07	MS
Weekly	26	Pounds per Day	lb/d	20.07	MS
Weekly	26	Pounds per Day	lb/d	20.07	MS
Weekly	26	Pounds per Day	lb/d	20.07	MS
Weekly	26	Pounds per Day	lb/d	20.07	MS
Weekly	26	Pounds per Day	lb/d	20.07	MS
Weekly	26	Pounds per Day	lb/d	20.07	MS
Weekly	26	Pounds per Day	lb/d	20.07	MS
Weekly	26	Pounds per Day	lb/d	20.07	MS
Weekly	26	Pounds per Day	lb/d	20.07	MS
Weekly	26	Pounds per Day	lb/d	20.07	MS
Weekly	26	Pounds per Day	lb/d	20.07	MS
Weekly	26	Pounds per Day	lb/d	20.07	MS
Weekly	26	Pounds per Day	lb/d	20.07	MS
Weekly	26	Pounds per Day	lb/d	20.07	MS
Weekly	26	Pounds per Day	lb/d	20.07	MS
Weekly	26	Pounds per Day	lb/d	20.07	MS
Weekly	26	Pounds per Day	lb/d	20.07	MS
Weekly	26	Pounds per Day	lb/d	20.07	MS
Weekly	26	Pounds per Day	lb/d	20.07	MS
Weekly	26	Pounds per Day	lb/d	20.07	MS
Weekly	26	Pounds per Day	lb/d	20.07	MS
Weekly	26	Pounds per Day	lb/d	20.07	MS
Weekly	26	Pounds per Day	lb/d	20.07	MS
Weekly	26	Pounds per Day	lb/d	20.07	MS
Weekly	26	Pounds per Day	lb/d	20.07	MS
Weekly	26	Pounds per Day	lb/d	20.07	MS
Weekly	26	Pounds per Day	lb/d	20.07	MS
Weekly	26	Pounds per Day	lb/d	20.07	MS
Weekly	26	Pounds per Day	lb/d	20.07	MS
Weekly	26	Pounds per Day	lb/d	20.07	MS
Weekly	26	Pounds per Day	lb/d	20.07	MS
Weekly	26	Pounds per Day	lb/d	20.07	MS
Weekly	26	Pounds per Day	lb/d	20.07	MS
Weekly	26	Pounds per Day	lb/d	20.07	MS
Weekly	26	Pounds per Day	lb/d	20.07	MS

Weekly	26	Pounds per Day	lb/d	20.07	MS
Weekly	19	Milligrams per Liter	mg/L	4.	3C
Weekly	19	Milligrams per Liter	mg/L	4.	3C
Weekly	19	Milligrams per Liter	mg/L	4.	3C
Weekly	19	Milligrams per Liter	mg/L	4.	3C
Weekly	19	Milligrams per Liter	mg/L	4.	3C
Weekly	19	Milligrams per Liter	mg/L	4.	3C
Weekly	19	Milligrams per Liter	mg/L	4.	3C
Weekly	19	Milligrams per Liter	mg/L	4.	3C
Weekly	19	Milligrams per Liter	mg/L	4.	3C
Weekly	19	Milligrams per Liter	mg/L	4.	3C
Weekly	19	Milligrams per Liter	mg/L	4.	3C
Weekly	19	Milligrams per Liter	mg/L	4.	3C
Weekly	19	Milligrams per Liter	mg/L	4.	3C
Weekly	19	Milligrams per Liter	mg/L	4.	3C
Weekly	19	Milligrams per Liter	mg/L	4.	3C
Weekly	19	Milligrams per Liter	mg/L	4.	3C
Weekly	19	Milligrams per Liter	mg/L	4.	3C
Weekly	19	Milligrams per Liter	mg/L	4.	3C
Weekly	19	Milligrams per Liter	mg/L	4.	3C
Weekly	19	Milligrams per Liter	mg/L	4.	3C
Weekly	19	Milligrams per Liter	mg/L	4.	3C
Weekly	19	Milligrams per Liter	mg/L	4.	3C
Weekly	19	Milligrams per Liter	mg/L	4.	3C
Weekly	19	Milligrams per Liter	mg/L	4.	3C
Weekly	19	Milligrams per Liter	mg/L	4.	3C
Weekly	19	Milligrams per Liter	mg/L	4.	3C
Weekly	19	Milligrams per Liter	mg/L	6.	DD
Weekly	19	Milligrams per Liter	mg/L	6.	DD
Weekly	19	Milligrams per Liter	mg/L	6.	DD
Weekly	19	Milligrams per Liter	mg/L	6.	DD
Weekly	19	Milligrams per Liter	mg/L	6.	DD
Weekly	19	Milligrams per Liter	mg/L	6.	DD
Weekly	19	Milligrams per Liter	mg/L	6.	DD
Weekly	19	Milligrams per Liter	mg/L	6.	DD
Weekly	19	Milligrams per Liter	mg/L	6.	DD
Weekly	19	Milligrams per Liter	mg/L	6.	DD
Weekly	19	Milligrams per Liter	mg/L	6.	DD
Weekly	19	Milligrams per Liter	mg/L	6.	DD
Weekly	19	Milligrams per Liter	mg/L	6.	DD
Weekly	19	Milligrams per Liter	mg/L	6.	DD
Weekly	19	Milligrams per Liter	mg/L	6.	DD
Weekly	19	Milligrams per Liter	mg/L	6.	DD
Weekly	19	Milligrams per Liter	mg/L	6.	DD
Weekly	19	Milligrams per Liter	mg/L	6.	DD
Weekly	19	Milligrams per Liter	mg/L	6.	DD
Weekly	19	Milligrams per Liter	mg/L	6.	DD
Weekly	19	Milligrams per Liter	mg/L	6.	DD
Weekly	19	Milligrams per Liter	mg/L	6.	DD
Weekly	19	Milligrams per Liter	mg/L	6.	DD
Weekly	19	Milligrams per Liter	mg/L	6.	DD

Weekly	19	Milligrams per Liter	mg/L	6.	DD
Weekly	19	Milligrams per Liter	mg/L	6.	DD
Weekly	26	Pounds per Day	lb/d	1.84	3C
Weekly	26	Pounds per Day	lb/d	1.84	3C
Weekly	26	Pounds per Day	lb/d	1.84	3C
Weekly	26	Pounds per Day	lb/d	1.84	3C
Weekly	26	Pounds per Day	lb/d	1.84	3C
Weekly	26	Pounds per Day	lb/d	1.84	3C
Weekly	26	Pounds per Day	lb/d	1.84	3C
Weekly	26	Pounds per Day	lb/d	1.84	3C
Weekly	26	Pounds per Day	lb/d	1.84	3C
Weekly	26	Pounds per Day	lb/d	1.84	3C
Weekly	26	Pounds per Day	lb/d	1.84	3C
Weekly	26	Pounds per Day	lb/d	1.84	3C
Weekly	26	Pounds per Day	lb/d	1.84	3C
Weekly	26	Pounds per Day	lb/d	1.84	3C
Weekly	26	Pounds per Day	lb/d	1.84	3C
Weekly	26	Pounds per Day	lb/d	1.84	3C
Weekly	26	Pounds per Day	lb/d	1.84	3C
Weekly	26	Pounds per Day	lb/d	1.84	3C
Weekly	26	Pounds per Day	lb/d	1.84	3C
Weekly	26	Pounds per Day	lb/d	1.84	3C
Weekly	26	Pounds per Day	lb/d	1.84	3C
Weekly	26	Pounds per Day	lb/d	1.84	3C
Weekly	26	Pounds per Day	lb/d	1.84	3C
Weekly	26	Pounds per Day	lb/d	1.84	3C
Weekly	26	Pounds per Day	lb/d	1.84	3C
Weekly	26	Pounds per Day	lb/d	1.84	3C
Weekly	26	Pounds per Day	lb/d	2.76	DD
Weekly	26	Pounds per Day	lb/d	2.76	DD
Weekly	26	Pounds per Day	lb/d	2.76	DD
Weekly	26	Pounds per Day	lb/d	2.76	DD
Weekly	26	Pounds per Day	lb/d	2.76	DD
Weekly	26	Pounds per Day	lb/d	2.76	DD
Weekly	26	Pounds per Day	lb/d	2.76	DD
Weekly	26	Pounds per Day	lb/d	2.76	DD
Weekly	26	Pounds per Day	lb/d	2.76	DD
Weekly	26	Pounds per Day	lb/d	2.76	DD
Weekly	26	Pounds per Day	lb/d	2.76	DD
Weekly	26	Pounds per Day	lb/d	2.76	DD
Weekly	26	Pounds per Day	lb/d	2.76	DD
Weekly	26	Pounds per Day	lb/d	2.76	DD
Weekly	26	Pounds per Day	lb/d	2.76	DD
Weekly	26	Pounds per Day	lb/d	2.76	DD
Weekly	26	Pounds per Day	lb/d	2.76	DD
Weekly	26	Pounds per Day	lb/d	2.76	DD
Weekly	26	Pounds per Day	lb/d	2.76	DD
Weekly	26	Pounds per Day	lb/d	2.76	DD
Weekly	26	Pounds per Day	lb/d	2.76	DD
Weekly	26	Pounds per Day	lb/d	2.76	DD
Weekly	26	Pounds per Day	lb/d	2.76	DD

Weekly	26	Pounds per Day	lb/d	2.76	DD
Weekly	26	Pounds per Day	lb/d	2.76	DD
Weekly	26	Pounds per Day	lb/d	2.76	DD
Weekly	19	Milligrams per Liter	mg/L	10.	3C
Weekly	19	Milligrams per Liter	mg/L	10.	3C
Weekly	19	Milligrams per Liter	mg/L	10.	3C
Weekly	19	Milligrams per Liter	mg/L	10.	3C
Weekly	19	Milligrams per Liter	mg/L	10.	3C
Weekly	19	Milligrams per Liter	mg/L	10.	3C
Weekly	19	Milligrams per Liter	mg/L	10.	3C
Weekly	19	Milligrams per Liter	mg/L	10.	3C
Weekly	19	Milligrams per Liter	mg/L	10.	3C
Weekly	19	Milligrams per Liter	mg/L	10.	3C
Weekly	19	Milligrams per Liter	mg/L	10.	3C
Weekly	19	Milligrams per Liter	mg/L	10.	3C
Weekly	19	Milligrams per Liter	mg/L	10.	3C
Weekly	19	Milligrams per Liter	mg/L	10.	3C
Weekly	19	Milligrams per Liter	mg/L	10.	3C
Weekly	19	Milligrams per Liter	mg/L	10.	3C
Weekly	19	Milligrams per Liter	mg/L	10.	3C
Weekly	19	Milligrams per Liter	mg/L	10.	3C
Weekly	19	Milligrams per Liter	mg/L	10.	3C
Weekly	19	Milligrams per Liter	mg/L	10.	3C
Weekly	19	Milligrams per Liter	mg/L	10.	3C
Weekly	19	Milligrams per Liter	mg/L	10.	3C
Weekly	19	Milligrams per Liter	mg/L	10.	3C
Weekly	19	Milligrams per Liter	mg/L	10.	3C
Weekly	19	Milligrams per Liter	mg/L	10.	3C
Weekly	19	Milligrams per Liter	mg/L	10.	3C
Weekly	19	Milligrams per Liter	mg/L	15.	DD
Weekly	19	Milligrams per Liter	mg/L	15.	DD
Weekly	19	Milligrams per Liter	mg/L	15.	DD
Weekly	19	Milligrams per Liter	mg/L	15.	DD
Weekly	19	Milligrams per Liter	mg/L	15.	DD
Weekly	19	Milligrams per Liter	mg/L	15.	DD
Weekly	19	Milligrams per Liter	mg/L	15.	DD
Weekly	19	Milligrams per Liter	mg/L	15.	DD
Weekly	19	Milligrams per Liter	mg/L	15.	DD
Weekly	19	Milligrams per Liter	mg/L	15.	DD
Weekly	19	Milligrams per Liter	mg/L	15.	DD
Weekly	19	Milligrams per Liter	mg/L	15.	DD
Weekly	19	Milligrams per Liter	mg/L	15.	DD
Weekly	19	Milligrams per Liter	mg/L	15.	DD
Weekly	19	Milligrams per Liter	mg/L	15.	DD
Weekly	19	Milligrams per Liter	mg/L	15.	DD
Weekly	19	Milligrams per Liter	mg/L	15.	DD
Weekly	19	Milligrams per Liter	mg/L	15.	DD
Weekly	19	Milligrams per Liter	mg/L	15.	DD
Weekly	19	Milligrams per Liter	mg/L	15.	DD
Weekly	19	Milligrams per Liter	mg/L	15.	DD
Weekly	19	Milligrams per Liter	mg/L	15.	DD

Weekly	19	Milligrams per Liter	mg/L	15.	DD
Weekly	19	Milligrams per Liter	mg/L	15.	DD
Weekly	19	Milligrams per Liter	mg/L	15.	DD
Weekly	19	Milligrams per Liter	mg/L	15.	DD
Weekly	26	Pounds per Day	lb/d	4.6	3C
Weekly	26	Pounds per Day	lb/d	4.6	3C
Weekly	26	Pounds per Day	lb/d	4.6	3C
Weekly	26	Pounds per Day	lb/d	4.6	3C
Weekly	26	Pounds per Day	lb/d	4.6	3C
Weekly	26	Pounds per Day	lb/d	4.6	3C
Weekly	26	Pounds per Day	lb/d	4.6	3C
Weekly	26	Pounds per Day	lb/d	4.6	3C
Weekly	26	Pounds per Day	lb/d	4.6	3C
Weekly	26	Pounds per Day	lb/d	4.6	3C
Weekly	26	Pounds per Day	lb/d	4.6	3C
Weekly	26	Pounds per Day	lb/d	4.6	3C
Weekly	26	Pounds per Day	lb/d	4.6	3C
Weekly	26	Pounds per Day	lb/d	4.6	3C
Weekly	26	Pounds per Day	lb/d	4.6	3C
Weekly	26	Pounds per Day	lb/d	4.6	3C
Weekly	26	Pounds per Day	lb/d	4.6	3C
Weekly	26	Pounds per Day	lb/d	4.6	3C
Weekly	26	Pounds per Day	lb/d	4.6	3C
Weekly	26	Pounds per Day	lb/d	4.6	3C
Weekly	26	Pounds per Day	lb/d	4.6	3C
Weekly	26	Pounds per Day	lb/d	4.6	3C
Weekly	26	Pounds per Day	lb/d	4.6	3C
Weekly	26	Pounds per Day	lb/d	4.6	3C
Weekly	26	Pounds per Day	lb/d	4.6	3C
Weekly	26	Pounds per Day	lb/d	4.6	3C
Weekly	26	Pounds per Day	lb/d	6.9	DD
Weekly	26	Pounds per Day	lb/d	6.9	DD
Weekly	26	Pounds per Day	lb/d	6.9	DD
Weekly	26	Pounds per Day	lb/d	6.9	DD
Weekly	26	Pounds per Day	lb/d	6.9	DD
Weekly	26	Pounds per Day	lb/d	6.9	DD
Weekly	26	Pounds per Day	lb/d	6.9	DD
Weekly	26	Pounds per Day	lb/d	6.9	DD
Weekly	26	Pounds per Day	lb/d	6.9	DD
Weekly	26	Pounds per Day	lb/d	6.9	DD
Weekly	26	Pounds per Day	lb/d	6.9	DD
Weekly	26	Pounds per Day	lb/d	6.9	DD
Weekly	26	Pounds per Day	lb/d	6.9	DD
Weekly	26	Pounds per Day	lb/d	6.9	DD
Weekly	26	Pounds per Day	lb/d	6.9	DD
Weekly	26	Pounds per Day	lb/d	6.9	DD
Weekly	26	Pounds per Day	lb/d	6.9	DD
Weekly	26	Pounds per Day	lb/d	6.9	DD
Weekly	26	Pounds per Day	lb/d	6.9	DD
Weekly	26	Pounds per Day	lb/d	6.9	DD
Weekly	26	Pounds per Day	lb/d	6.9	DD

Weekly	26	Pounds per Day	lb/d	6.9	DD
Weekly	26	Pounds per Day	lb/d	6.9	DD
Weekly	26	Pounds per Day	lb/d	6.9	DD
Weekly	26	Pounds per Day	lb/d	6.9	DD
Weekly	26	Pounds per Day	lb/d	6.9	DD
Weekly	03	Million Gallons per D	MGD		3C
Weekly	03	Million Gallons per D	MGD		3C
Weekly	03	Million Gallons per D	MGD		3C
Weekly	03	Million Gallons per D	MGD		3C
Weekly	03	Million Gallons per D	MGD		3C
Weekly	03	Million Gallons per D	MGD		3C
Weekly	03	Million Gallons per D	MGD		3C
Weekly	03	Million Gallons per D	MGD		3C
Weekly	03	Million Gallons per D	MGD		3C
Weekly	03	Million Gallons per D	MGD		3C
Weekly	03	Million Gallons per D	MGD		3C
Weekly	03	Million Gallons per D	MGD		3C
Weekly	03	Million Gallons per D	MGD		3C
Weekly	03	Million Gallons per D	MGD		3C
Weekly	03	Million Gallons per D	MGD		3C
Weekly	03	Million Gallons per D	MGD		3C
Weekly	03	Million Gallons per D	MGD		3C
Weekly	03	Million Gallons per D	MGD		3C
Weekly	03	Million Gallons per D	MGD		3C
Weekly	03	Million Gallons per D	MGD		3C
Weekly	03	Million Gallons per D	MGD		3C
Weekly	03	Million Gallons per D	MGD		3C
Weekly	03	Million Gallons per D	MGD		3C
Weekly	03	Million Gallons per D	MGD		3C
Weekly	03	Million Gallons per D	MGD		3C
Weekly	03	Million Gallons per D	MGD		3C
Weekly	03	Million Gallons per D	MGD		3C
Weekly	03	Million Gallons per D	MGD		3C
Weekly	03	Million Gallons per D	MGD		3C
Weekly	03	Million Gallons per D	MGD		3C
Weekly	03	Million Gallons per D	MGD		3C
Weekly	03	Million Gallons per D	MGD		3C
Weekly	03	Million Gallons per D	MGD		3C
Weekly	03	Million Gallons per D	MGD		3C
Weekly	03	Million Gallons per D	MGD		3C
Weekly	03	Million Gallons per D	MGD		3C
Weekly	03	Million Gallons per D	MGD		3C
Weekly	03	Million Gallons per D	MGD		3C
Weekly	03	Million Gallons per D	MGD		3C
Weekly	03	Million Gallons per D	MGD		3C
Weekly	03	Million Gallons per D	MGD		3C
Weekly	03	Million Gallons per D	MGD		3C
Weekly	03	Million Gallons per D	MGD		3C
Weekly	03	Million Gallons per D	MGD		3C
Weekly	03	Million Gallons per D	MGD		3C
Weekly	03	Million Gallons per D	MGD		3C

Weekly	03	Million Gallons per D	MGD		3C
Weekly	03	Million Gallons per D	MGD		3C
Weekly	03	Million Gallons per D	MGD		3C
Weekly	03	Million Gallons per D	MGD		3C
Weekly	03	Million Gallons per D	MGD		3C
Weekly	03	Million Gallons per D	MGD		IA
Weekly	03	Million Gallons per D	MGD		IA
Weekly	03	Million Gallons per D	MGD		IA
Weekly	03	Million Gallons per D	MGD		IA
Weekly	03	Million Gallons per D	MGD		IA
Weekly	03	Million Gallons per D	MGD		IA
Weekly	03	Million Gallons per D	MGD		IA
Weekly	03	Million Gallons per D	MGD		IA
Weekly	03	Million Gallons per D	MGD		IA
Weekly	03	Million Gallons per D	MGD		IA
Weekly	03	Million Gallons per D	MGD		IA
Weekly	03	Million Gallons per D	MGD		IA
Weekly	03	Million Gallons per D	MGD		IA
Weekly	03	Million Gallons per D	MGD		IA
Weekly	03	Million Gallons per D	MGD		IA
Weekly	03	Million Gallons per D	MGD		IA
Weekly	03	Million Gallons per D	MGD		IA
Weekly	03	Million Gallons per D	MGD		IA
Weekly	03	Million Gallons per D	MGD		IA
Weekly	03	Million Gallons per D	MGD		IA
Weekly	03	Million Gallons per D	MGD		IA
Weekly	03	Million Gallons per D	MGD		IA
Weekly	03	Million Gallons per D	MGD		IA
Weekly	03	Million Gallons per D	MGD		IA
Weekly	03	Million Gallons per D	MGD		IA
Weekly	03	Million Gallons per D	MGD		IA
Weekly	03	Million Gallons per D	MGD		IA
Weekly	03	Million Gallons per D	MGD		IA
Weekly	03	Million Gallons per D	MGD		IA
Weekly	03	Million Gallons per D	MGD		IA
Weekly	03	Million Gallons per D	MGD		IA
Weekly	03	Million Gallons per D	MGD		IA
Weekly	03	Million Gallons per D	MGD		IA
Weekly	03	Million Gallons per D	MGD		IA
Weekly	03	Million Gallons per D	MGD		IA
Weekly	03	Million Gallons per D	MGD		IA
Weekly	03	Million Gallons per D	MGD		IA
Weekly	03	Million Gallons per D	MGD		IA
Weekly	03	Million Gallons per D	MGD		IA
Weekly	03	Million Gallons per D	MGD		IA
Weekly	03	Million Gallons per D	MGD		IA
Weekly	03	Million Gallons per D	MGD		IA
Weekly	03	Million Gallons per D	MGD		IA
Weekly	03	Million Gallons per D	MGD		IA
Weekly	03	Million Gallons per D	MGD		IA
Weekly	03	Million Gallons per D	MGD		IA

Weekly	03	Million Gallons per D	MGD		IA
Weekly	03	Million Gallons per D	MGD		IA
Weekly	03	Million Gallons per D	MGD		IA
Weekly	03	Million Gallons per D	MGD		IA
Weekly	03	Million Gallons per D	MGD		IA
Weekly	19	Milligrams per Liter	mg/L	.011	3C
Weekly	19	Milligrams per Liter	mg/L	.011	3C
Weekly	19	Milligrams per Liter	mg/L	.011	3C
Weekly	19	Milligrams per Liter	mg/L	.011	3C
Weekly	19	Milligrams per Liter	mg/L	.011	3C
Weekly	19	Milligrams per Liter	mg/L	.011	3C
Weekly	19	Milligrams per Liter	mg/L	.011	3C
Weekly	19	Milligrams per Liter	mg/L	.011	3C
Weekly	19	Milligrams per Liter	mg/L	.011	3C
Weekly	19	Milligrams per Liter	mg/L	.011	3C
Weekly	19	Milligrams per Liter	mg/L	.011	3C
Weekly	19	Milligrams per Liter	mg/L	.011	3C
Weekly	19	Milligrams per Liter	mg/L	.011	3C
Weekly	19	Milligrams per Liter	mg/L	.011	3C
Weekly	19	Milligrams per Liter	mg/L	.011	3C
Weekly	19	Milligrams per Liter	mg/L	.011	3C
Weekly	19	Milligrams per Liter	mg/L	.011	3C
Weekly	19	Milligrams per Liter	mg/L	.011	3C
Weekly	19	Milligrams per Liter	mg/L	.011	3C
Weekly	19	Milligrams per Liter	mg/L	.011	3C
Weekly	19	Milligrams per Liter	mg/L	.011	3C
Weekly	19	Milligrams per Liter	mg/L	.011	3C
Weekly	19	Milligrams per Liter	mg/L	.011	3C
Weekly	19	Milligrams per Liter	mg/L	.011	3C
Weekly	19	Milligrams per Liter	mg/L	.011	3C
Weekly	19	Milligrams per Liter	mg/L	.011	3C
Weekly	19	Milligrams per Liter	mg/L	.011	3C
Weekly	19	Milligrams per Liter	mg/L	.011	3C
Weekly	19	Milligrams per Liter	mg/L	.011	3C
Weekly	19	Milligrams per Liter	mg/L	.011	3C
Weekly	19	Milligrams per Liter	mg/L	.011	3C
Weekly	19	Milligrams per Liter	mg/L	.011	3C
Weekly	19	Milligrams per Liter	mg/L	.011	3C
Weekly	19	Milligrams per Liter	mg/L	.011	3C
Weekly	19	Milligrams per Liter	mg/L	.011	3C
Weekly	19	Milligrams per Liter	mg/L	.011	3C
Weekly	19	Milligrams per Liter	mg/L	.011	3C
Weekly	19	Milligrams per Liter	mg/L	.011	3C
Weekly	19	Milligrams per Liter	mg/L	.011	3C
Weekly	19	Milligrams per Liter	mg/L	.011	3C
Weekly	19	Milligrams per Liter	mg/L	.011	3C
Weekly	19	Milligrams per Liter	mg/L	.011	3C
Weekly	19	Milligrams per Liter	mg/L	.011	3C
Weekly	19	Milligrams per Liter	mg/L	.011	3C
Weekly	19	Milligrams per Liter	mg/L	.011	3C

Weekly	19	Milligrams per Liter	mg/L	.011	3C
Weekly	19	Milligrams per Liter	mg/L	.011	3C
Weekly	19	Milligrams per Liter	mg/L	.011	3C
Weekly	19	Milligrams per Liter	mg/L	.011	3C
Weekly	19	Milligrams per Liter	mg/L	.011	3C
Weekly	19	Milligrams per Liter	mg/L	.019	DD
Weekly	19	Milligrams per Liter	mg/L	.019	DD
Weekly	19	Milligrams per Liter	mg/L	.019	DD
Weekly	19	Milligrams per Liter	mg/L	.019	DD
Weekly	19	Milligrams per Liter	mg/L	.019	DD
Weekly	19	Milligrams per Liter	mg/L	.019	DD
Weekly	19	Milligrams per Liter	mg/L	.019	DD
Weekly	19	Milligrams per Liter	mg/L	.019	DD
Weekly	19	Milligrams per Liter	mg/L	.019	DD
Weekly	19	Milligrams per Liter	mg/L	.019	DD
Weekly	19	Milligrams per Liter	mg/L	.019	DD
Weekly	19	Milligrams per Liter	mg/L	.019	DD
Weekly	19	Milligrams per Liter	mg/L	.019	DD
Weekly	19	Milligrams per Liter	mg/L	.019	DD
Weekly	19	Milligrams per Liter	mg/L	.019	DD
Weekly	19	Milligrams per Liter	mg/L	.019	DD
Weekly	19	Milligrams per Liter	mg/L	.019	DD
Weekly	19	Milligrams per Liter	mg/L	.019	DD
Weekly	19	Milligrams per Liter	mg/L	.019	DD
Weekly	19	Milligrams per Liter	mg/L	.019	DD
Weekly	19	Milligrams per Liter	mg/L	.019	DD
Weekly	19	Milligrams per Liter	mg/L	.019	DD
Weekly	19	Milligrams per Liter	mg/L	.019	DD
Weekly	19	Milligrams per Liter	mg/L	.019	DD
Weekly	19	Milligrams per Liter	mg/L	.019	DD
Weekly	19	Milligrams per Liter	mg/L	.019	DD
Weekly	19	Milligrams per Liter	mg/L	.019	DD
Weekly	19	Milligrams per Liter	mg/L	.019	DD
Weekly	19	Milligrams per Liter	mg/L	.019	DD
Weekly	19	Milligrams per Liter	mg/L	.019	DD
Weekly	19	Milligrams per Liter	mg/L	.019	DD
Weekly	19	Milligrams per Liter	mg/L	.019	DD
Weekly	19	Milligrams per Liter	mg/L	.019	DD
Weekly	19	Milligrams per Liter	mg/L	.019	DD
Weekly	19	Milligrams per Liter	mg/L	.019	DD
Weekly	19	Milligrams per Liter	mg/L	.019	DD
Weekly	19	Milligrams per Liter	mg/L	.019	DD
Weekly	19	Milligrams per Liter	mg/L	.019	DD
Weekly	19	Milligrams per Liter	mg/L	.019	DD
Weekly	19	Milligrams per Liter	mg/L	.019	DD
Weekly	19	Milligrams per Liter	mg/L	.019	DD
Weekly	19	Milligrams per Liter	mg/L	.019	DD
Weekly	19	Milligrams per Liter	mg/L	.019	DD
Weekly	19	Milligrams per Liter	mg/L	.019	DD
Weekly	19	Milligrams per Liter	mg/L	.019	DD
Weekly	19	Milligrams per Liter	mg/L	.019	DD

Weekly	19	Milligrams per Liter	mg/L	.019	DD
Weekly	19	Milligrams per Liter	mg/L	.019	DD
Weekly	19	Milligrams per Liter	mg/L	.019	DD
Weekly	19	Milligrams per Liter	mg/L	.019	DD
Weekly	19	Milligrams per Liter	mg/L	.019	DD
Weekly	13	Number per 100 Mil	#/100mL	130.	3D
Weekly	13	Number per 100 Mil	#/100mL	130.	3D
Weekly	13	Number per 100 Mil	#/100mL	130.	3D
Weekly	13	Number per 100 Mil	#/100mL	130.	3D
Weekly	13	Number per 100 Mil	#/100mL	130.	3D
Weekly	13	Number per 100 Mil	#/100mL	130.	3D
Weekly	13	Number per 100 Mil	#/100mL	130.	3D
Weekly	13	Number per 100 Mil	#/100mL	130.	3D
Weekly	13	Number per 100 Mil	#/100mL	130.	3D
Weekly	13	Number per 100 Mil	#/100mL	130.	3D
Weekly	13	Number per 100 Mil	#/100mL	130.	3D
Weekly	13	Number per 100 Mil	#/100mL	130.	3D
Weekly	13	Number per 100 Mil	#/100mL	130.	3D
Weekly	13	Number per 100 Mil	#/100mL	130.	3D
Weekly	13	Number per 100 Mil	#/100mL	130.	3D
Weekly	13	Number per 100 Mil	#/100mL	130.	3D
Weekly	13	Number per 100 Mil	#/100mL	130.	3D
Weekly	13	Number per 100 Mil	#/100mL	130.	3D
Weekly	13	Number per 100 Mil	#/100mL	130.	3D
Weekly	13	Number per 100 Mil	#/100mL	130.	3D
Weekly	13	Number per 100 Mil	#/100mL	130.	3D
Weekly	13	Number per 100 Mil	#/100mL	130.	3D
Weekly	13	Number per 100 Mil	#/100mL	130.	3D
Weekly	13	Number per 100 Mil	#/100mL	130.	3D
Weekly	13	Number per 100 Mil	#/100mL	130.	3D
Weekly	13	Number per 100 Mil	#/100mL	130.	3D
Weekly	13	Number per 100 Mil	#/100mL	130.	3D
Weekly	13	Number per 100 Mil	#/100mL	130.	3D
Weekly	13	Number per 100 Mil	#/100mL	130.	3D
Weekly	13	Number per 100 Mil	#/100mL	130.	3D
Weekly	13	Number per 100 Mil	#/100mL	130.	3D
Weekly	13	Number per 100 Mil	#/100mL	130.	3D
Weekly	13	Number per 100 Mil	#/100mL	130.	3D
Weekly	13	Number per 100 Mil	#/100mL	130.	3D
Weekly	13	Number per 100 Mil	#/100mL	130.	3D
Weekly	13	Number per 100 Mil	#/100mL	130.	3D
Weekly	13	Number per 100 Mil	#/100mL	130.	3D
Weekly	13	Number per 100 Mil	#/100mL	130.	3D
Weekly	13	Number per 100 Mil	#/100mL	130.	3D
Weekly	13	Number per 100 Mil	#/100mL	130.	3D
Weekly	13	Number per 100 Mil	#/100mL	130.	3D
Weekly	13	Number per 100 Mil	#/100mL	130.	3D
Weekly	13	Number per 100 Mil	#/100mL	130.	3D
Weekly	13	Number per 100 Mil	#/100mL	130.	3D
Weekly	13	Number per 100 Mil	#/100mL	130.	3D
Weekly	13	Number per 100 Mil	#/100mL	130.	3D

Weekly	13	Number per 100 Mil	#/100mL	130.	3D
Weekly	13	Number per 100 Mil	#/100mL	130.	3D
Weekly	13	Number per 100 Mil	#/100mL	130.	3D
Weekly	13	Number per 100 Mil	#/100mL	130.	3D
Weekly	13	Number per 100 Mil	#/100mL	130.	3D
Weekly	13	Number per 100 Mil	#/100mL	240.	7B
Weekly	13	Number per 100 Mil	#/100mL	240.	7B
Weekly	13	Number per 100 Mil	#/100mL	240.	7B
Weekly	13	Number per 100 Mil	#/100mL	240.	7B
Weekly	13	Number per 100 Mil	#/100mL	240.	7B
Weekly	13	Number per 100 Mil	#/100mL	240.	7B
Weekly	13	Number per 100 Mil	#/100mL	240.	7B
Weekly	13	Number per 100 Mil	#/100mL	240.	7B
Weekly	13	Number per 100 Mil	#/100mL	240.	7B
Weekly	13	Number per 100 Mil	#/100mL	240.	7B
Weekly	13	Number per 100 Mil	#/100mL	240.	7B
Weekly	13	Number per 100 Mil	#/100mL	240.	7B
Weekly	13	Number per 100 Mil	#/100mL	240.	7B
Weekly	13	Number per 100 Mil	#/100mL	240.	7B
Weekly	13	Number per 100 Mil	#/100mL	240.	7B
Weekly	13	Number per 100 Mil	#/100mL	240.	7B
Weekly	13	Number per 100 Mil	#/100mL	240.	7B
Weekly	13	Number per 100 Mil	#/100mL	240.	7B
Weekly	13	Number per 100 Mil	#/100mL	240.	7B
Weekly	13	Number per 100 Mil	#/100mL	240.	7B
Weekly	13	Number per 100 Mil	#/100mL	240.	7B
Weekly	13	Number per 100 Mil	#/100mL	240.	7B
Weekly	13	Number per 100 Mil	#/100mL	240.	7B
Weekly	13	Number per 100 Mil	#/100mL	240.	7B
Weekly	13	Number per 100 Mil	#/100mL	240.	7B
Weekly	13	Number per 100 Mil	#/100mL	240.	7B
Weekly	13	Number per 100 Mil	#/100mL	240.	7B
Weekly	13	Number per 100 Mil	#/100mL	240.	7B
Weekly	13	Number per 100 Mil	#/100mL	240.	7B
Weekly	13	Number per 100 Mil	#/100mL	240.	7B
Weekly	13	Number per 100 Mil	#/100mL	240.	7B
Weekly	13	Number per 100 Mil	#/100mL	240.	7B
Weekly	13	Number per 100 Mil	#/100mL	240.	7B
Weekly	13	Number per 100 Mil	#/100mL	240.	7B
Weekly	13	Number per 100 Mil	#/100mL	240.	7B
Weekly	13	Number per 100 Mil	#/100mL	240.	7B
Weekly	13	Number per 100 Mil	#/100mL	240.	7B
Weekly	13	Number per 100 Mil	#/100mL	240.	7B
Weekly	13	Number per 100 Mil	#/100mL	240.	7B
Weekly	13	Number per 100 Mil	#/100mL	240.	7B
Weekly	13	Number per 100 Mil	#/100mL	240.	7B
Weekly	13	Number per 100 Mil	#/100mL	240.	7B
Weekly	13	Number per 100 Mil	#/100mL	240.	7B
Weekly	13	Number per 100 Mil	#/100mL	240.	7B
Weekly	13	Number per 100 Mil	#/100mL	240.	7B
Weekly	13	Number per 100 Mil	#/100mL	240.	7B

Weekly	13	Number per 100 Mil	#/100mL	240.	7B
Weekly	13	Number per 100 Mil	#/100mL	240.	7B
Weekly	13	Number per 100 Mil	#/100mL	240.	7B
Weekly	13	Number per 100 Mil	#/100mL	240.	7B
Weekly	13	Number per 100 Mil	#/100mL	240.	7B
Weekly	19	Milligrams per Liter	mg/L	25.	3C
Weekly	19	Milligrams per Liter	mg/L	25.	3C
Weekly	19	Milligrams per Liter	mg/L	25.	3C
Weekly	19	Milligrams per Liter	mg/L	25.	3C
Weekly	19	Milligrams per Liter	mg/L	25.	3C
Weekly	19	Milligrams per Liter	mg/L	25.	3C
Weekly	19	Milligrams per Liter	mg/L	25.	3C
Weekly	19	Milligrams per Liter	mg/L	25.	3C
Weekly	19	Milligrams per Liter	mg/L	25.	3C
Weekly	19	Milligrams per Liter	mg/L	25.	3C
Weekly	19	Milligrams per Liter	mg/L	25.	3C
Weekly	19	Milligrams per Liter	mg/L	25.	3C
Weekly	19	Milligrams per Liter	mg/L	25.	3C
Weekly	19	Milligrams per Liter	mg/L	25.	3C
Weekly	19	Milligrams per Liter	mg/L	25.	3C
Weekly	19	Milligrams per Liter	mg/L	25.	3C
Weekly	19	Milligrams per Liter	mg/L	25.	3C
Weekly	19	Milligrams per Liter	mg/L	25.	3C
Weekly	19	Milligrams per Liter	mg/L	25.	3C
Weekly	19	Milligrams per Liter	mg/L	25.	3C
Weekly	19	Milligrams per Liter	mg/L	25.	3C
Weekly	19	Milligrams per Liter	mg/L	25.	3C
Weekly	19	Milligrams per Liter	mg/L	25.	3C
Weekly	19	Milligrams per Liter	mg/L	25.	3C
Weekly	19	Milligrams per Liter	mg/L	25.	3C
Weekly	19	Milligrams per Liter	mg/L	25.	3C
Weekly	19	Milligrams per Liter	mg/L	25.	3C
Weekly	19	Milligrams per Liter	mg/L	25.	3C
Weekly	19	Milligrams per Liter	mg/L	25.	3C
Weekly	19	Milligrams per Liter	mg/L	25.	3C
Weekly	19	Milligrams per Liter	mg/L	25.	3C
Weekly	19	Milligrams per Liter	mg/L	25.	3C
Weekly	19	Milligrams per Liter	mg/L	25.	3C
Weekly	19	Milligrams per Liter	mg/L	25.	3C
Weekly	19	Milligrams per Liter	mg/L	25.	3C
Weekly	19	Milligrams per Liter	mg/L	25.	3C
Weekly	19	Milligrams per Liter	mg/L	25.	3C
Weekly	19	Milligrams per Liter	mg/L	25.	3C
Weekly	19	Milligrams per Liter	mg/L	25.	3C
Weekly	19	Milligrams per Liter	mg/L	25.	3C
Weekly	19	Milligrams per Liter	mg/L	25.	3C
Weekly	19	Milligrams per Liter	mg/L	25.	3C
Weekly	19	Milligrams per Liter	mg/L	25.	3C
Weekly	19	Milligrams per Liter	mg/L	25.	3C
Weekly	19	Milligrams per Liter	mg/L	25.	3C
Weekly	19	Milligrams per Liter	mg/L	25.	3C

Weekly	19	Milligrams per Liter	mg/L	25.	3C
Weekly	19	Milligrams per Liter	mg/L	25.	3C
Weekly	19	Milligrams per Liter	mg/L	25.	3C
Weekly	19	Milligrams per Liter	mg/L	25.	3C
Weekly	19	Milligrams per Liter	mg/L	25.	3C
Weekly	19	Milligrams per Liter	mg/L	37.5	MS
Weekly	19	Milligrams per Liter	mg/L	37.5	MS
Weekly	19	Milligrams per Liter	mg/L	37.5	MS
Weekly	19	Milligrams per Liter	mg/L	37.5	MS
Weekly	19	Milligrams per Liter	mg/L	37.5	MS
Weekly	19	Milligrams per Liter	mg/L	37.5	MS
Weekly	19	Milligrams per Liter	mg/L	37.5	MS
Weekly	19	Milligrams per Liter	mg/L	37.5	MS
Weekly	19	Milligrams per Liter	mg/L	37.5	MS
Weekly	19	Milligrams per Liter	mg/L	37.5	MS
Weekly	19	Milligrams per Liter	mg/L	37.5	MS
Weekly	19	Milligrams per Liter	mg/L	37.5	MS
Weekly	19	Milligrams per Liter	mg/L	37.5	MS
Weekly	19	Milligrams per Liter	mg/L	37.5	MS
Weekly	19	Milligrams per Liter	mg/L	37.5	MS
Weekly	19	Milligrams per Liter	mg/L	37.5	MS
Weekly	19	Milligrams per Liter	mg/L	37.5	MS
Weekly	19	Milligrams per Liter	mg/L	37.5	MS
Weekly	19	Milligrams per Liter	mg/L	37.5	MS
Weekly	19	Milligrams per Liter	mg/L	37.5	MS
Weekly	19	Milligrams per Liter	mg/L	37.5	MS
Weekly	19	Milligrams per Liter	mg/L	37.5	MS
Weekly	19	Milligrams per Liter	mg/L	37.5	MS
Weekly	19	Milligrams per Liter	mg/L	37.5	MS
Weekly	19	Milligrams per Liter	mg/L	37.5	MS
Weekly	19	Milligrams per Liter	mg/L	37.5	MS
Weekly	19	Milligrams per Liter	mg/L	37.5	MS
Weekly	19	Milligrams per Liter	mg/L	37.5	MS
Weekly	19	Milligrams per Liter	mg/L	37.5	MS
Weekly	19	Milligrams per Liter	mg/L	37.5	MS
Weekly	19	Milligrams per Liter	mg/L	37.5	MS
Weekly	19	Milligrams per Liter	mg/L	37.5	MS
Weekly	19	Milligrams per Liter	mg/L	37.5	MS
Weekly	19	Milligrams per Liter	mg/L	37.5	MS
Weekly	19	Milligrams per Liter	mg/L	37.5	MS
Weekly	19	Milligrams per Liter	mg/L	37.5	MS
Weekly	19	Milligrams per Liter	mg/L	37.5	MS
Weekly	19	Milligrams per Liter	mg/L	37.5	MS
Weekly	19	Milligrams per Liter	mg/L	37.5	MS
Weekly	19	Milligrams per Liter	mg/L	37.5	MS
Weekly	19	Milligrams per Liter	mg/L	37.5	MS
Weekly	19	Milligrams per Liter	mg/L	37.5	MS
Weekly	19	Milligrams per Liter	mg/L	37.5	MS
Weekly	19	Milligrams per Liter	mg/L	37.5	MS
Weekly	19	Milligrams per Liter	mg/L	37.5	MS
Weekly	19	Milligrams per Liter	mg/L	37.5	MS

Weekly	19	Milligrams per Liter	mg/L	37.5	MS
Weekly	19	Milligrams per Liter	mg/L	37.5	MS
Weekly	19	Milligrams per Liter	mg/L	37.5	MS
Weekly	19	Milligrams per Liter	mg/L	37.5	MS
Weekly	19	Milligrams per Liter	mg/L	37.5	MS
Weekly	26	Pounds per Day	lb/d	11.5	3C
Weekly	26	Pounds per Day	lb/d	11.5	3C
Weekly	26	Pounds per Day	lb/d	11.5	3C
Weekly	26	Pounds per Day	lb/d	11.5	3C
Weekly	26	Pounds per Day	lb/d	11.5	3C
Weekly	26	Pounds per Day	lb/d	11.5	3C
Weekly	26	Pounds per Day	lb/d	11.5	3C
Weekly	26	Pounds per Day	lb/d	11.5	3C
Weekly	26	Pounds per Day	lb/d	11.5	3C
Weekly	26	Pounds per Day	lb/d	11.5	3C
Weekly	26	Pounds per Day	lb/d	11.5	3C
Weekly	26	Pounds per Day	lb/d	11.5	3C
Weekly	26	Pounds per Day	lb/d	11.5	3C
Weekly	26	Pounds per Day	lb/d	11.5	3C
Weekly	26	Pounds per Day	lb/d	11.5	3C
Weekly	26	Pounds per Day	lb/d	11.5	3C
Weekly	26	Pounds per Day	lb/d	11.5	3C
Weekly	26	Pounds per Day	lb/d	11.5	3C
Weekly	26	Pounds per Day	lb/d	11.5	3C
Weekly	26	Pounds per Day	lb/d	11.5	3C
Weekly	26	Pounds per Day	lb/d	11.5	3C
Weekly	26	Pounds per Day	lb/d	11.5	3C
Weekly	26	Pounds per Day	lb/d	11.5	3C
Weekly	26	Pounds per Day	lb/d	11.5	3C
Weekly	26	Pounds per Day	lb/d	11.5	3C
Weekly	26	Pounds per Day	lb/d	11.5	3C
Weekly	26	Pounds per Day	lb/d	11.5	3C
Weekly	26	Pounds per Day	lb/d	11.5	3C
Weekly	26	Pounds per Day	lb/d	11.5	3C
Weekly	26	Pounds per Day	lb/d	11.5	3C
Weekly	26	Pounds per Day	lb/d	11.5	3C
Weekly	26	Pounds per Day	lb/d	11.5	3C
Weekly	26	Pounds per Day	lb/d	11.5	3C
Weekly	26	Pounds per Day	lb/d	11.5	3C
Weekly	26	Pounds per Day	lb/d	11.5	3C
Weekly	26	Pounds per Day	lb/d	11.5	3C
Weekly	26	Pounds per Day	lb/d	11.5	3C
Weekly	26	Pounds per Day	lb/d	11.5	3C
Weekly	26	Pounds per Day	lb/d	11.5	3C
Weekly	26	Pounds per Day	lb/d	11.5	3C
Weekly	26	Pounds per Day	lb/d	11.5	3C
Weekly	26	Pounds per Day	lb/d	11.5	3C
Weekly	26	Pounds per Day	lb/d	11.5	3C
Weekly	26	Pounds per Day	lb/d	11.5	3C
Weekly	26	Pounds per Day	lb/d	11.5	3C
Weekly	26	Pounds per Day	lb/d	11.5	3C

Weekly	26	Pounds per Day	lb/d	11.5	3C
Weekly	26	Pounds per Day	lb/d	11.5	3C
Weekly	26	Pounds per Day	lb/d	11.5	3C
Weekly	26	Pounds per Day	lb/d	11.5	3C
Weekly	26	Pounds per Day	lb/d	11.5	3C
Weekly	26	Pounds per Day	lb/d	17.25	MS
Weekly	26	Pounds per Day	lb/d	17.25	MS
Weekly	26	Pounds per Day	lb/d	17.25	MS
Weekly	26	Pounds per Day	lb/d	17.25	MS
Weekly	26	Pounds per Day	lb/d	17.25	MS
Weekly	26	Pounds per Day	lb/d	17.25	MS
Weekly	26	Pounds per Day	lb/d	17.25	MS
Weekly	26	Pounds per Day	lb/d	17.25	MS
Weekly	26	Pounds per Day	lb/d	17.25	MS
Weekly	26	Pounds per Day	lb/d	17.25	MS
Weekly	26	Pounds per Day	lb/d	17.25	MS
Weekly	26	Pounds per Day	lb/d	17.25	MS
Weekly	26	Pounds per Day	lb/d	17.25	MS
Weekly	26	Pounds per Day	lb/d	17.25	MS
Weekly	26	Pounds per Day	lb/d	17.25	MS
Weekly	26	Pounds per Day	lb/d	17.25	MS
Weekly	26	Pounds per Day	lb/d	17.25	MS
Weekly	26	Pounds per Day	lb/d	17.25	MS
Weekly	26	Pounds per Day	lb/d	17.25	MS
Weekly	26	Pounds per Day	lb/d	17.25	MS
Weekly	26	Pounds per Day	lb/d	17.25	MS
Weekly	26	Pounds per Day	lb/d	17.25	MS
Weekly	26	Pounds per Day	lb/d	17.25	MS
Weekly	26	Pounds per Day	lb/d	17.25	MS
Weekly	26	Pounds per Day	lb/d	17.25	MS
Weekly	26	Pounds per Day	lb/d	17.25	MS
Weekly	26	Pounds per Day	lb/d	17.25	MS
Weekly	26	Pounds per Day	lb/d	17.25	MS
Weekly	26	Pounds per Day	lb/d	17.25	MS
Weekly	26	Pounds per Day	lb/d	17.25	MS
Weekly	26	Pounds per Day	lb/d	17.25	MS
Weekly	26	Pounds per Day	lb/d	17.25	MS
Weekly	26	Pounds per Day	lb/d	17.25	MS
Weekly	26	Pounds per Day	lb/d	17.25	MS
Weekly	26	Pounds per Day	lb/d	17.25	MS
Weekly	26	Pounds per Day	lb/d	17.25	MS
Weekly	26	Pounds per Day	lb/d	17.25	MS
Weekly	26	Pounds per Day	lb/d	17.25	MS
Weekly	26	Pounds per Day	lb/d	17.25	MS
Weekly	26	Pounds per Day	lb/d	17.25	MS
Weekly	26	Pounds per Day	lb/d	17.25	MS
Weekly	26	Pounds per Day	lb/d	17.25	MS
Weekly	26	Pounds per Day	lb/d	17.25	MS
Weekly	26	Pounds per Day	lb/d	17.25	MS
Weekly	26	Pounds per Day	lb/d	17.25	MS
Weekly	26	Pounds per Day	lb/d	17.25	MS

Weekly	26	Pounds per Day	lb/d	17.25	MS
Weekly	26	Pounds per Day	lb/d	17.25	MS
Weekly	26	Pounds per Day	lb/d	17.25	MS
Weekly	26	Pounds per Day	lb/d	17.25	MS
Weekly	26	Pounds per Day	lb/d	17.25	MS

istical Base Short D	istical Base Long D	istical Base Type C	DMR Comment	Modification Effect	Modification Type
INST MIN	Instantaneous Minin	MIN	Airview continues to work with the City of Elizabethtown to tak		
INST MIN	Instantaneous Minin	MIN	Airview continue to make every effort to bring thie utility into c		
INST MIN	Instantaneous Minin	MIN	Airview does continue to operate the plant and try to bring the		
INST MIN	Instantaneous Minin	MIN	Airview Utilities and the operator are trying very hard to bring		
INST MIN	Instantaneous Minin	MIN	Airview Utilities continues to make efforts to bring this treatme		
INST MIN	Instantaneous Minin	MIN	Airview Utilities continues to make every effort to bring the tre		
INST MIN	Instantaneous Minin	MIN	Airview Utilities continues to work with the City of Elizabethtov		
INST MIN	Instantaneous Minin	MIN	Airview Utilities continues to work with the City of Elizabethtov		
INST MIN	Instantaneous Minin	MIN	Airview Utilities is trying on a daily basis to bring the plant into		
INST MIN	Instantaneous Minin	MIN	Airview Utilities is trying very hard to properly operate and ma		
INST MIN	Instantaneous Minin	MIN	CLIENT TO ENTER COMMENTS, SITE INACCESSABLE D		
INST MIN	Instantaneous Minin	MIN	Due to the very wet conditions during the month of March the		
INST MIN	Instantaneous Minin	MIN	Due to very wet, stormy conditions duringthe monitoring perio		
INST MIN	Instantaneous Minin	MIN	During the early days of March the plant was still recovering fr		
INST MIN	Instantaneous Minin	MIN	During the month of August we experienced a lot of problems		
INST MIN	Instantaneous Minin	MIN	During the month of January it was discovered that the overflo		
INST MIN	Instantaneous Minin	MIN	During the month of June there were periods of very heavy ra		
INST MIN	Instantaneous Minin	MIN	Every effort is being made to bring the effluent into complianc		
INST MIN	Instantaneous Minin	MIN	Generally the excursions are due to wet weather and heavy fl		
INST MIN	Instantaneous Minin	MIN	In review of the lab results, the method and location of sample		
INST MIN	Instantaneous Minin	MIN	It appears that Airview Utilities may be getting closer to being		
INST MIN	Instantaneous Minin	MIN	It is very difficult to get this plant into compliance with the extr		
INST MIN	Instantaneous Minin	MIN	It would be greatly appreciated if the Division of Water could a		
INST MIN	Instantaneous Minin	MIN	Midwest just took over this plant and we are working to get in		
INST MIN	Instantaneous Minin	MIN	Note: A request has been made to the DCA and the Louisville		
INST MIN	Instantaneous Minin	MIN	Note that Airview Utilities and the operator are working to brin		
INST MIN	Instantaneous Minin	MIN	Note: That with the authorization of the Louisville regional Offi		
INST MIN	Instantaneous Minin	MIN	Note: This is a very old package plant that really needs to be		
INST MIN	Instantaneous Minin	MIN	Please excuse the latness of submitting this DMR. It was an		
INST MIN	Instantaneous Minin	MIN	Please note that Airview is making every effort to bring the pla		
INST MIN	Instantaneous Minin	MIN	Please note that Airview Utilites is working to bring the treatm		
INST MIN	Instantaneous Minin	MIN	Please note that Airview Utilities continues to make every effo		
INST MIN	Instantaneous Minin	MIN	Please note that Airview Utilities has filed to surrender and ab		
INST MIN	Instantaneous Minin	MIN	Please note that some exceedances of the permit for this faci		
INST MIN	Instantaneous Minin	MIN	Please note that the inaccessible location of the chlorine cont		
INST MIN	Instantaneous Minin	MIN	Please note that the lab entered the data on 7/28/16 instead o		
INST MIN	Instantaneous Minin	MIN	Please note that the operator makes every effort to bring the p		
INST MIN	Instantaneous Minin	MIN	Please note that we have had problems with one of the		
INST MIN	Instantaneous Minin	MIN	Please note that we making some improvements at the plant i		
INST MIN	Instantaneous Minin	MIN	Regardless of the way it may look, Airview Utilities is making e		
INST MIN	Instantaneous Minin	MIN	Test results for this monitoring period is much improved And e		
INST MIN	Instantaneous Minin	MIN	The Airview treatment is very old and outdated. It has exceed		
INST MIN	Instantaneous Minin	MIN	The extremely wet weather and I/I are causing many problems		
INST MIN	Instantaneous Minin	MIN	The extreme winter weather conditions, snow, ice and subzer		
INST MIN	Instantaneous Minin	MIN	The operator is making effort to bring the plant into complianc		
INST MIN	Instantaneous Minin	MIN	The operator is making every effort to bring the plant into com		
INST MIN	Instantaneous Minin	MIN	The operator is trying very hard to get this p[lant into compliar		
INST MIN	Instantaneous Minin	MIN	The plant operator continues to make every effort to bring the		
INST MIN	Instantaneous Minin	MIN	The plant operator is making every effort to bring the plant int		
INST MIN	Instantaneous Minin	MIN	The TRC exceedance is due to the lack of dechlorination at th		

INST MIN	Instantaneous Minin	MIN			
MINIMUM	Minimum	MIN	Airview continues to work with the City of Elizabethtown to tak		
MINIMUM	Minimum	MIN	Airview continue to make every effort to bring thie utility into c		
MINIMUM	Minimum	MIN	Airview does continue to operate the plant and try to bring the		
MINIMUM	Minimum	MIN	Airview Utilities and the operator are trying very hard to bring		
MINIMUM	Minimum	MIN	Airview Utilities continues to make efforts to bring this treatme		
MINIMUM	Minimum	MIN	Airview Utilities continues to make every effort to bring the tre		
MINIMUM	Minimum	MIN	Airview Utilities continues to work with the City of Elizabethtov		
MINIMUM	Minimum	MIN	Airview Utilities continues to work with the City of Elizabethtov		
MINIMUM	Minimum	MIN	Airview Utilities is trying on a daily basis to bring the plant into		
MINIMUM	Minimum	MIN	Airview Utilities is trying very hard to properly operate and ma		
MINIMUM	Minimum	MIN	CLIENT TO ENTER COMMENTS, SITE INACCESSABLE D		
MINIMUM	Minimum	MIN	Due to the very wet conditions during the month of March the		
MINIMUM	Minimum	MIN	Due to very wet, stormy conditions duringthe monitoring perio		
MINIMUM	Minimum	MIN	During the early days of March the plant was still recovering fr		
MINIMUM	Minimum	MIN	During the month of August we experienced a lot of problems		
MINIMUM	Minimum	MIN	During the month of January it was discovered that the overflo		
MINIMUM	Minimum	MIN	During the month of June there were periods of very heavy ra		
MINIMUM	Minimum	MIN	Every effort is being made to bring the effluent into compliance		
MINIMUM	Minimum	MIN	Generally the excursions are due to wet weather and heavy fl		
MINIMUM	Minimum	MIN	In review of the lab results, the method and location of sample		
MINIMUM	Minimum	MIN	It appears that Airview Utilities may be getting closer to being		
MINIMUM	Minimum	MIN	It is very difficult to get this plant into compliance with the extr		
MINIMUM	Minimum	MIN	It would be greatly appreciated if the Division of Water could a		
MINIMUM	Minimum	MIN	Midwest just took over this plant and we are working to get in		
MINIMUM	Minimum	MIN	Note: A request has been made to the DCA and the Louisville		
MINIMUM	Minimum	MIN	Note that Airview Utilities and the operator are working to brin		
MINIMUM	Minimum	MIN	Note: That with the authorization of the Louisville regional Offi		
MINIMUM	Minimum	MIN	Note: This is a very old package plant that really needs to be		
MINIMUM	Minimum	MIN	Please excuse the latness of submitting this DMR. It was an		
MINIMUM	Minimum	MIN	Please note that Airview is making every effort to bring the pla		
MINIMUM	Minimum	MIN	Please note that Airview Utilites is working to bring the treatm		
MINIMUM	Minimum	MIN	Please note that Airview Utilities continues to make every effo		
MINIMUM	Minimum	MIN	Please note that Airview Utilities has filed to surrender and ab		
MINIMUM	Minimum	MIN	Please note that some exceedances of the permit for this faci		
MINIMUM	Minimum	MIN	Please note that the inaccessible location of the chlorine cont		
MINIMUM	Minimum	MIN	Please note that the lab entered the data on 7/28/16 instead o		
MINIMUM	Minimum	MIN	Please note that the operator makes every effort to bring the p		
MINIMUM	Minimum	MIN	Please note that we have had problems with one of the		
MINIMUM	Minimum	MIN	Please note that we making some improvements at the plant i		
MINIMUM	Minimum	MIN	Regardless of the way it may look, Airview Utilities is making e		
MINIMUM	Minimum	MIN	Test results for this monitoring period is much improved And o		
MINIMUM	Minimum	MIN	The Airview treatment is very old and outdated. It has exceed		
MINIMUM	Minimum	MIN	The extremely wet weather and I/I are causing many problems		
MINIMUM	Minimum	MIN	The extreme winter weather conditions, snow, ice and subzer		
MINIMUM	Minimum	MIN	The operator is making effort to bring the plant into compliance		
MINIMUM	Minimum	MIN	The operator is making every effort to bring the plant into com		
MINIMUM	Minimum	MIN	The operator is trying very hard to get this p[lant into compliar		
MINIMUM	Minimum	MIN	The plant operator continues to make every effort to bring the		
MINIMUM	Minimum	MIN	The plant operator is making every effort to bring the plant int		
MINIMUM	Minimum	MIN	The TRC exceedance is due to the lack of dechlorination at th		

MINIMUM	Minimum	MIN			
MAXIMUM	Maximum	MAX	Airview continues to work with the City of Elizabethtown to tak		
MAXIMUM	Maximum	MAX	Airview continue to make every effort to bring thie utility into c		
MAXIMUM	Maximum	MAX	Airview does continue to operate the plant and try to bring the		
MAXIMUM	Maximum	MAX	Airview Utilities and the operator are trying very hard to bring		
MAXIMUM	Maximum	MAX	Airview Utilities continues to make efforts to bring this treatme		
MAXIMUM	Maximum	MAX	Airview Utilities continues to make every effort to bring the tre		
MAXIMUM	Maximum	MAX	Airview Utilities continues to work with the City of Elizabethtov		
MAXIMUM	Maximum	MAX	Airview Utilities continues to work with the City of Elizabethtov		
MAXIMUM	Maximum	MAX	Airview Utilities is trying on a daily basis to bring the plant into		
MAXIMUM	Maximum	MAX	Airview Utilities is trying very hard to properly operate and ma		
MAXIMUM	Maximum	MAX	CLIENT TO ENTER COMMENTS, SITE INACCESSABLE D		
MAXIMUM	Maximum	MAX	Due to the very wet conditions during the month of March the		
MAXIMUM	Maximum	MAX	Due to very wet, stormy conditions duringthe monitoring perio		
MAXIMUM	Maximum	MAX	During the early days of March the plant was still recovering fr		
MAXIMUM	Maximum	MAX	During the month of August we experienced a lot of problems		
MAXIMUM	Maximum	MAX	During the month of January it was discovered that the overflo		
MAXIMUM	Maximum	MAX	During the month of June there were periods of very heavy ra		
MAXIMUM	Maximum	MAX	Every effort is being made to bring the effluent into compliance		
MAXIMUM	Maximum	MAX	Generally the excursions are due to wet weather and heavy fl		
MAXIMUM	Maximum	MAX	In review of the lab results, the method and location of sample		
MAXIMUM	Maximum	MAX	It appears that Airview Utilities may be getting closer to being		
MAXIMUM	Maximum	MAX	It is very difficult to get this plant into compliance with the extr		
MAXIMUM	Maximum	MAX	It would be greatly appreciated if the Division of Water could a		
MAXIMUM	Maximum	MAX	Midwest just took over this plant and we are working to get in		
MAXIMUM	Maximum	MAX	Note: A request has been made to the DCA and the Louisville		
MAXIMUM	Maximum	MAX	Note that Airview Utilities and the operator are working to brin		
MAXIMUM	Maximum	MAX	Note: That with the authorization of the Louisville regional Offi		
MAXIMUM	Maximum	MAX	Note: This is a very old package plant that really needs to be		
MAXIMUM	Maximum	MAX	Please excuse the latness of submitting this DMR. It was an		
MAXIMUM	Maximum	MAX	Please note that Airview is making every effort to bring the pla		
MAXIMUM	Maximum	MAX	Please note that Airview Utilites is working to bring the treatm		
MAXIMUM	Maximum	MAX	Please note that Airview Utilities continues to make every effo		
MAXIMUM	Maximum	MAX	Please note that Airview Utilities has filed to surrender and ab		
MAXIMUM	Maximum	MAX	Please note that some exceedances of the permit for this faci		
MAXIMUM	Maximum	MAX	Please note that the inaccessible location of the chlorine cont		
MAXIMUM	Maximum	MAX	Please note that the lab entered the data on 7/28/16 instead o		
MAXIMUM	Maximum	MAX	Please note that the operator makes every effort to bring the p		
MAXIMUM	Maximum	MAX	Please note that we have had problems with one of the		
MAXIMUM	Maximum	MAX	Please note that we making some improvements at the plant i		
MAXIMUM	Maximum	MAX	Regardless of the way it may look, Airview Utilities is making e		
MAXIMUM	Maximum	MAX	Test results for this monitoring period is much improved And o		
MAXIMUM	Maximum	MAX	The Airview treatment is very old and outdated. It has exceed		
MAXIMUM	Maximum	MAX	The extremely wet weather and I/I are causing many problems		
MAXIMUM	Maximum	MAX	The extreme winter weather conditions, snow, ice and subzer		
MAXIMUM	Maximum	MAX	The operator is making effort to bring the plant into compliance		
MAXIMUM	Maximum	MAX	The operator is making every effort to bring the plant into com		
MAXIMUM	Maximum	MAX	The operator is trying very hard to get this p[lant into compliar		
MAXIMUM	Maximum	MAX	The plant operator continues to make every effort to bring the		
MAXIMUM	Maximum	MAX	The plant operator is making every effort to bring the plant into		
MAXIMUM	Maximum	MAX	The TRC exceedance is due to the lack of dechlorination at th		

MAXIMUM	Maximum	MAX			
30DA AVG	30 Day Average	AVG	Airview continues to work with the City of Elizabethtown to tak		
30DA AVG	30 Day Average	AVG	Airview continue to make every effort to bring thie utility into c		
30DA AVG	30 Day Average	AVG	Airview does continue to operate the plant and try to bring the		
30DA AVG	30 Day Average	AVG	Airview Utilities and the operator are trying very hard to bring		
30DA AVG	30 Day Average	AVG	Airview Utilities continues to make efforts to bring this treatme		
30DA AVG	30 Day Average	AVG	Airview Utilities continues to make every effort to bring the tre		
30DA AVG	30 Day Average	AVG	Airview Utilities continues to work with the City of Elizabethtov		
30DA AVG	30 Day Average	AVG	Airview Utilities continues to work with the City of Elizabethtov		
30DA AVG	30 Day Average	AVG	Airview Utilities is trying on a daily basis to bring the plant into		
30DA AVG	30 Day Average	AVG	Airview Utilities is trying very hard to properly operate and ma		
30DA AVG	30 Day Average	AVG	CLIENT TO ENTER COMMENTS, SITE INACCESSABLE D		
30DA AVG	30 Day Average	AVG	Due to the very wet conditions during the month of March the		
30DA AVG	30 Day Average	AVG	Due to very wet, stormy conditions duringthe monitoring perio		
30DA AVG	30 Day Average	AVG	During the early days of March the plant was still recovering fr		
30DA AVG	30 Day Average	AVG	During the month of August we experienced a lot of problems		
30DA AVG	30 Day Average	AVG	During the month of January it was discovered that the overflo		
30DA AVG	30 Day Average	AVG	During the month of June there were periods of very heavy ra		
30DA AVG	30 Day Average	AVG	Every effort is being made to bring the effluent into compliance		
30DA AVG	30 Day Average	AVG	Generally the excursions are due to wet weather and heavy fl		
30DA AVG	30 Day Average	AVG	In review of the lab results, the method and location of sample		
30DA AVG	30 Day Average	AVG	It appears that Airview Utilities may be getting closer to being		
30DA AVG	30 Day Average	AVG	It is very difficult to get this plant into compliance with the extr		
30DA AVG	30 Day Average	AVG	It would be greatly appreciated if the Division of Water could a		
30DA AVG	30 Day Average	AVG	Midwest just took over this plant and we are working to get in		
30DA AVG	30 Day Average	AVG	Note: A request has been made to the DCA and the Louisville		
30DA AVG	30 Day Average	AVG	Note that Airview Utilities and the operator are working to brin		
30DA AVG	30 Day Average	AVG	Note: That with the authorization of the Louisville regional Offi		
30DA AVG	30 Day Average	AVG	Note: This is a very old package plant that really needs to be		
30DA AVG	30 Day Average	AVG	Please excuse the latness of submitting this DMR. It was an		
30DA AVG	30 Day Average	AVG	Please note that Airview is making every effort to bring the pla		
30DA AVG	30 Day Average	AVG	Please note that Airview Utilites is working to bring the treatm		
30DA AVG	30 Day Average	AVG	Please note that Airview Utilities continues to make every effo		
30DA AVG	30 Day Average	AVG	Please note that Airview Utilities has filed to surrender and ab		
30DA AVG	30 Day Average	AVG	Please note that some exceedances of the permit for this faci		
30DA AVG	30 Day Average	AVG	Please note that the inaccessible location of the chlorine cont		
30DA AVG	30 Day Average	AVG	Please note that the lab entered the data on 7/28/16 instead o		
30DA AVG	30 Day Average	AVG	Please note that the operator makes every effort to bring the p		
30DA AVG	30 Day Average	AVG	Please note that we have had problems with one of the		
30DA AVG	30 Day Average	AVG	Please note that we making some improvements at the plant i		
30DA AVG	30 Day Average	AVG	Regardless of the way it may look, Airview Utilities is making e		
30DA AVG	30 Day Average	AVG	Test results for this monitoring period is much improved And o		
30DA AVG	30 Day Average	AVG	The Airview treatment is very old and outdated. It has exceed		
30DA AVG	30 Day Average	AVG	The extremely wet weather and I/I are causing many problems		
30DA AVG	30 Day Average	AVG	The extreme winter weather conditions, snow, ice and subzer		
30DA AVG	30 Day Average	AVG	The operator is making effort to bring the plant into compliance		
30DA AVG	30 Day Average	AVG	The operator is making every effort to bring the plant into com		
30DA AVG	30 Day Average	AVG	The operator is trying very hard to get this p[lant into compliar		
30DA AVG	30 Day Average	AVG	The plant operator continues to make every effort to bring the		
30DA AVG	30 Day Average	AVG	The plant operator is making every effort to bring the plant int		
30DA AVG	30 Day Average	AVG	The TRC exceedance is due to the lack of dechlorination at th		

30DA AVG	30 Day Average	AVG			
MX WK AV	Maximum Weekly A	MAX	Airview continues to work with the City of Elizabethtown to tak		
MX WK AV	Maximum Weekly A	MAX	Airview continue to make every effort to bring thie utility into c		
MX WK AV	Maximum Weekly A	MAX	Airview does continue to operate the plant and try to bring the		
MX WK AV	Maximum Weekly A	MAX	Airview Utilities and the operator are trying very hard to bring		
MX WK AV	Maximum Weekly A	MAX	Airview Utilities continues to make efforts to bring this treatme		
MX WK AV	Maximum Weekly A	MAX	Airview Utilities continues to make every effort to bring the tre		
MX WK AV	Maximum Weekly A	MAX	Airview Utilities continues to work with the City of Elizabethtov		
MX WK AV	Maximum Weekly A	MAX	Airview Utilities continues to work with the City of Elizabethtov		
MX WK AV	Maximum Weekly A	MAX	Airview Utilities is trying on a daily basis to bring the plant into		
MX WK AV	Maximum Weekly A	MAX	Airview Utilities is trying very hard to properly operate and ma		
MX WK AV	Maximum Weekly A	MAX	CLIENT TO ENTER COMMENTS, SITE INACCESSABLE D		
MX WK AV	Maximum Weekly A	MAX	Due to the very wet conditions during the month of March the		
MX WK AV	Maximum Weekly A	MAX	Due to very wet, stormy conditions duringthe monitoring perio		
MX WK AV	Maximum Weekly A	MAX	During the early days of March the plant was still recovering fr		
MX WK AV	Maximum Weekly A	MAX	During the month of August we experienced a lot of problems		
MX WK AV	Maximum Weekly A	MAX	During the month of January it was discovered that the overflo		
MX WK AV	Maximum Weekly A	MAX	During the month of June there were periods of very heavy ra		
MX WK AV	Maximum Weekly A	MAX	Every effort is being made to bring the effluent into compliance		
MX WK AV	Maximum Weekly A	MAX	Generally the excursions are due to wet weather and heavy fl		
MX WK AV	Maximum Weekly A	MAX	In review of the lab results, the method and location of sample		
MX WK AV	Maximum Weekly A	MAX	It appears that Airview Utilities may be getting closer to being		
MX WK AV	Maximum Weekly A	MAX	It is very difficult to get this plant into compliance with the extr		
MX WK AV	Maximum Weekly A	MAX	It would be greatly appreciated if the Division of Water could a		
MX WK AV	Maximum Weekly A	MAX	Midwest just took over this plant and we are working to get in		
MX WK AV	Maximum Weekly A	MAX	Note: A request has been made to the DCA and the Louisville		
MX WK AV	Maximum Weekly A	MAX	Note that Airview Utilities and the operator are working to brin		
MX WK AV	Maximum Weekly A	MAX	Note: That with the authorization of the Louisville regional Offi		
MX WK AV	Maximum Weekly A	MAX	Note: This is a very old package plant that really needs to be		
MX WK AV	Maximum Weekly A	MAX	Please excuse the latness of submitting this DMR. It was an		
MX WK AV	Maximum Weekly A	MAX	Please note that Airview is making every effort to bring the pla		
MX WK AV	Maximum Weekly A	MAX	Please note that Airview Utilites is working to bring the treatm		
MX WK AV	Maximum Weekly A	MAX	Please note that Airview Utilities continues to make every effo		
MX WK AV	Maximum Weekly A	MAX	Please note that Airview Utilities has filed to surrender and ab		
MX WK AV	Maximum Weekly A	MAX	Please note that some exceedances of the permit for this faci		
MX WK AV	Maximum Weekly A	MAX	Please note that the inaccessible location of the chlorine cont		
MX WK AV	Maximum Weekly A	MAX	Please note that the lab entered the data on 7/28/16 instead o		
MX WK AV	Maximum Weekly A	MAX	Please note that the operator makes every effort to bring the p		
MX WK AV	Maximum Weekly A	MAX	Please note that we have had problems with one of the		
MX WK AV	Maximum Weekly A	MAX	Please note that we making some improvements at the plant i		
MX WK AV	Maximum Weekly A	MAX	Regardless of the way it may look, Airview Utilities is making e		
MX WK AV	Maximum Weekly A	MAX	Test results for this monitoring period is much improved And o		
MX WK AV	Maximum Weekly A	MAX	The Airview treatment is very old and outdated. It has exceed		
MX WK AV	Maximum Weekly A	MAX	The extremely wet weather and I/I are causing many problems		
MX WK AV	Maximum Weekly A	MAX	The extreme winter weather conditions, snow, ice and subzer		
MX WK AV	Maximum Weekly A	MAX	The operator is making effort to bring the plant into compliance		
MX WK AV	Maximum Weekly A	MAX	The operator is making every effort to bring the plant into com		
MX WK AV	Maximum Weekly A	MAX	The operator is trying very hard to get this p[lant into compliar		
MX WK AV	Maximum Weekly A	MAX	The plant operator continues to make every effort to bring the		
MX WK AV	Maximum Weekly A	MAX	The plant operator is making every effort to bring the plant int		
MX WK AV	Maximum Weekly A	MAX	The TRC exceedance is due to the lack of dechlorination at th		

MX WK AV	Maximum Weekly A	MAX			
30DA AVG	30 Day Average	AVG	Airview continues to work with the City of Elizabethtown to tak		
30DA AVG	30 Day Average	AVG	Airview continue to make every effort to bring thie utility into c		
30DA AVG	30 Day Average	AVG	Airview does continue to operate the plant and try to bring the		
30DA AVG	30 Day Average	AVG	Airview Utilities and the operator are trying very hard to bring		
30DA AVG	30 Day Average	AVG	Airview Utilities continues to make efforts to bring this treatme		
30DA AVG	30 Day Average	AVG	Airview Utilities continues to make every effort to bring the tre		
30DA AVG	30 Day Average	AVG	Airview Utilities continues to work with the City of Elizabethtov		
30DA AVG	30 Day Average	AVG	Airview Utilities continues to work with the City of Elizabethtov		
30DA AVG	30 Day Average	AVG	Airview Utilities is trying on a daily basis to bring the plant into		
30DA AVG	30 Day Average	AVG	Airview Utilities is trying very hard to properly operate and ma		
30DA AVG	30 Day Average	AVG	CLIENT TO ENTER COMMENTS, SITE INACCESSABLE D		
30DA AVG	30 Day Average	AVG	Due to the very wet conditions during the month of March the		
30DA AVG	30 Day Average	AVG	Due to very wet, stormy conditions duringthe monitoring perio		
30DA AVG	30 Day Average	AVG	During the early days of March the plant was still recovering fr		
30DA AVG	30 Day Average	AVG	During the month of August we experienced a lot of problems		
30DA AVG	30 Day Average	AVG	During the month of January it was discovered that the overflo		
30DA AVG	30 Day Average	AVG	During the month of June there were periods of very heavy ra		
30DA AVG	30 Day Average	AVG	Every effort is being made to bring the effluent into compliance		
30DA AVG	30 Day Average	AVG	Generally the excursions are due to wet weather and heavy fl		
30DA AVG	30 Day Average	AVG	In review of the lab results, the method and location of sample		
30DA AVG	30 Day Average	AVG	It appears that Airview Utilities may be getting closer to being		
30DA AVG	30 Day Average	AVG	It is very difficult to get this plant into compliance with the extr		
30DA AVG	30 Day Average	AVG	It would be greatly appreciated if the Division of Water could a		
30DA AVG	30 Day Average	AVG	Midwest just took over this plant and we are working to get in		
30DA AVG	30 Day Average	AVG	Note: A request has been made to the DCA and the Louisville		
30DA AVG	30 Day Average	AVG	Note that Airview Utilities and the operator are working to brin		
30DA AVG	30 Day Average	AVG	Note: That with the authorization of the Louisville regional Offi		
30DA AVG	30 Day Average	AVG	Note: This is a very old package plant that really needs to be		
30DA AVG	30 Day Average	AVG	Please excuse the latness of submitting this DMR. It was an		
30DA AVG	30 Day Average	AVG	Please note that Airview is making every effort to bring the pla		
30DA AVG	30 Day Average	AVG	Please note that Airview Utilites is working to bring the treatm		
30DA AVG	30 Day Average	AVG	Please note that Airview Utilities continues to make every effo		
30DA AVG	30 Day Average	AVG	Please note that Airview Utilities has filed to surrender and ab		
30DA AVG	30 Day Average	AVG	Please note that some exceedances of the permit for this faci		
30DA AVG	30 Day Average	AVG	Please note that the inaccessible location of the chlorine cont		
30DA AVG	30 Day Average	AVG	Please note that the lab entered the data on 7/28/16 instead o		
30DA AVG	30 Day Average	AVG	Please note that the operator makes every effort to bring the p		
30DA AVG	30 Day Average	AVG	Please note that we have had problems with one of the		
30DA AVG	30 Day Average	AVG	Please note that we making some improvements at the plant i		
30DA AVG	30 Day Average	AVG	Regardless of the way it may look, Airview Utilities is making e		
30DA AVG	30 Day Average	AVG	Test results for this monitoring period is much improved And o		
30DA AVG	30 Day Average	AVG	The Airview treatment is very old and outdated. It has exceed		
30DA AVG	30 Day Average	AVG	The extremely wet weather and I/I are causing many problems		
30DA AVG	30 Day Average	AVG	The extreme winter weather conditions, snow, ice and subzer		
30DA AVG	30 Day Average	AVG	The operator is making effort to bring the plant into compliance		
30DA AVG	30 Day Average	AVG	The operator is making every effort to bring the plant into com		
30DA AVG	30 Day Average	AVG	The operator is trying very hard to get this p[lant into compliar		
30DA AVG	30 Day Average	AVG	The plant operator continues to make every effort to bring the		
30DA AVG	30 Day Average	AVG	The plant operator is making every effort to bring the plant int		
30DA AVG	30 Day Average	AVG	The TRC exceedance is due to the lack of dechlorination at th		

30DA AVG	30 Day Average	AVG			
MX WK AV	Maximum Weekly A	MAX	Airview continues to work with the City of Elizabethtown to tak		
MX WK AV	Maximum Weekly A	MAX	Airview continue to make every effort to bring thie utility into c		
MX WK AV	Maximum Weekly A	MAX	Airview does continue to operate the plant and try to bring the		
MX WK AV	Maximum Weekly A	MAX	Airview Utilities and the operator are trying very hard to bring		
MX WK AV	Maximum Weekly A	MAX	Airview Utilities continues to make efforts to bring this treatme		
MX WK AV	Maximum Weekly A	MAX	Airview Utilities continues to make every effort to bring the tre		
MX WK AV	Maximum Weekly A	MAX	Airview Utilities continues to work with the City of Elizabethtov		
MX WK AV	Maximum Weekly A	MAX	Airview Utilities continues to work with the City of Elizabethtov		
MX WK AV	Maximum Weekly A	MAX	Airview Utilities is trying on a daily basis to bring the plant into		
MX WK AV	Maximum Weekly A	MAX	Airview Utilities is trying very hard to properly operate and ma		
MX WK AV	Maximum Weekly A	MAX	CLIENT TO ENTER COMMENTS, SITE INACCESSABLE D		
MX WK AV	Maximum Weekly A	MAX	Due to the very wet conditions during the month of March the		
MX WK AV	Maximum Weekly A	MAX	Due to very wet, stormy conditions duringthe monitoring perio		
MX WK AV	Maximum Weekly A	MAX	During the early days of March the plant was still recovering fr		
MX WK AV	Maximum Weekly A	MAX	During the month of August we experienced a lot of problems		
MX WK AV	Maximum Weekly A	MAX	During the month of January it was discovered that the overflo		
MX WK AV	Maximum Weekly A	MAX	During the month of June there were periods of very heavy ra		
MX WK AV	Maximum Weekly A	MAX	Every effort is being made to bring the effluent into compliance		
MX WK AV	Maximum Weekly A	MAX	Generally the excursions are due to wet weather and heavy fl		
MX WK AV	Maximum Weekly A	MAX	In review of the lab results, the method and location of sample		
MX WK AV	Maximum Weekly A	MAX	It appears that Airview Utilities may be getting closer to being		
MX WK AV	Maximum Weekly A	MAX	It is very difficult to get this plant into compliance with the extr		
MX WK AV	Maximum Weekly A	MAX	It would be greatly appreciated if the Division of Water could a		
MX WK AV	Maximum Weekly A	MAX	Midwest just took over this plant and we are working to get in		
MX WK AV	Maximum Weekly A	MAX	Note: A request has been made to the DCA and the Louisville		
MX WK AV	Maximum Weekly A	MAX	Note that Airview Utilities and the operator are working to brin		
MX WK AV	Maximum Weekly A	MAX	Note: That with the authorization of the Louisville regional Offi		
MX WK AV	Maximum Weekly A	MAX	Note: This is a very old package plant that really needs to be		
MX WK AV	Maximum Weekly A	MAX	Please excuse the latness of submitting this DMR. It was an		
MX WK AV	Maximum Weekly A	MAX	Please note that Airview is making every effort to bring the pla		
MX WK AV	Maximum Weekly A	MAX	Please note that Airview Utilites is working to bring the treatm		
MX WK AV	Maximum Weekly A	MAX	Please note that Airview Utilities continues to make every effo		
MX WK AV	Maximum Weekly A	MAX	Please note that Airview Utilities has filed to surrender and ab		
MX WK AV	Maximum Weekly A	MAX	Please note that some exceedances of the permit for this faci		
MX WK AV	Maximum Weekly A	MAX	Please note that the inaccessible location of the chlorine cont		
MX WK AV	Maximum Weekly A	MAX	Please note that the lab entered the data on 7/28/16 instead o		
MX WK AV	Maximum Weekly A	MAX	Please note that the operator makes every effort to bring the p		
MX WK AV	Maximum Weekly A	MAX	Please note that we have had problems with one of the		
MX WK AV	Maximum Weekly A	MAX	Please note that we making some improvements at the plant i		
MX WK AV	Maximum Weekly A	MAX	Regardless of the way it may look, Airview Utilities is making e		
MX WK AV	Maximum Weekly A	MAX	Test results for this monitoring period is much improved And o		
MX WK AV	Maximum Weekly A	MAX	The Airview treatment is very old and outdated. It has exceed		
MX WK AV	Maximum Weekly A	MAX	The extremely wet weather and I/I are causing many problems		
MX WK AV	Maximum Weekly A	MAX	The extreme winter weather conditions, snow, ice and subzer		
MX WK AV	Maximum Weekly A	MAX	The operator is making effort to bring the plant into compliance		
MX WK AV	Maximum Weekly A	MAX	The operator is making every effort to bring the plant into com		
MX WK AV	Maximum Weekly A	MAX	The operator is trying very hard to get this p[lant into compliar		
MX WK AV	Maximum Weekly A	MAX	The plant operator continues to make every effort to bring the		
MX WK AV	Maximum Weekly A	MAX	The plant operator is making every effort to bring the plant int		
MX WK AV	Maximum Weekly A	MAX	The TRC exceedance is due to the lack of dechlorination at th		

MX WK AV	Maximum Weekly A	MAX			
30DA AVG	30 Day Average	AVG	Airview continue to make every effort to bring thie utility into c		
30DA AVG	30 Day Average	AVG	Airview Utilities continues to make efforts to bring this treatme		
30DA AVG	30 Day Average	AVG	Airview Utilities continues to work with the City of Elizabethtov		
30DA AVG	30 Day Average	AVG	Airview Utilities is trying on a daily basis to bring the plant into		
30DA AVG	30 Day Average	AVG	CLIENT TO ENTER COMMENTS, SITE INACCESSABLE D		
30DA AVG	30 Day Average	AVG	Due to very wet, stormy conditions duringthe monitoring perio		
30DA AVG	30 Day Average	AVG	During the month of August we experienced a lot of problems		
30DA AVG	30 Day Average	AVG	During the month of June there were periods of very heavy ra		
30DA AVG	30 Day Average	AVG	Every effort is being made to bring the effluent into complianc		
30DA AVG	30 Day Average	AVG	In review of the lab results, the method and location of sample		
30DA AVG	30 Day Average	AVG	Midwest just took over this plant and we are working to get in		
30DA AVG	30 Day Average	AVG	Note that Airview Utilities and the operator are working to brin		
30DA AVG	30 Day Average	AVG	Note: This is a very old package plant that really needs to be		
30DA AVG	30 Day Average	AVG	Please note that Airview Utilities continues to make every effo		
30DA AVG	30 Day Average	AVG	Please note that Airview Utilities has filed to surrender and ab		
30DA AVG	30 Day Average	AVG	Please note that some exceedances of the permit for this faci		
30DA AVG	30 Day Average	AVG	Please note that the inaccessible location of the chlorine cont		
30DA AVG	30 Day Average	AVG	Please note that the lab entered the data on 7/28/16 instead o		
30DA AVG	30 Day Average	AVG	Please note that we have had problems with one of the		
30DA AVG	30 Day Average	AVG	Regardless of the way it may look, Airview Utilities is making		
30DA AVG	30 Day Average	AVG	Test results for this monitoring period is much improved And		
30DA AVG	30 Day Average	AVG	The Airview treatment is very old and outdated. It has exceed		
30DA AVG	30 Day Average	AVG	The operator is making effort to bring the plant into complianc		
30DA AVG	30 Day Average	AVG	The operator is trying very hard to get this p[lant into compliar		
30DA AVG	30 Day Average	AVG	The plant operator continues to make every effort to bring the		
30DA AVG	30 Day Average	AVG			
DAILY MX	Daily Maximum	MAX	Airview continue to make every effort to bring thie utility into c		
DAILY MX	Daily Maximum	MAX	Airview Utilities continues to make efforts to bring this treatme		
DAILY MX	Daily Maximum	MAX	Airview Utilities continues to work with the City of Elizabethtov		
DAILY MX	Daily Maximum	MAX	Airview Utilities is trying on a daily basis to bring the plant into		
DAILY MX	Daily Maximum	MAX	CLIENT TO ENTER COMMENTS, SITE INACCESSABLE D		
DAILY MX	Daily Maximum	MAX	Due to very wet, stormy conditions duringthe monitoring perio		
DAILY MX	Daily Maximum	MAX	During the month of August we experienced a lot of problems		
DAILY MX	Daily Maximum	MAX	During the month of June there were periods of very heavy ra		
DAILY MX	Daily Maximum	MAX	Every effort is being made to bring the effluent into complianc		
DAILY MX	Daily Maximum	MAX	In review of the lab results, the method and location of sample		
DAILY MX	Daily Maximum	MAX	Midwest just took over this plant and we are working to get in		
DAILY MX	Daily Maximum	MAX	Note that Airview Utilities and the operator are working to brin		
DAILY MX	Daily Maximum	MAX	Note: This is a very old package plant that really needs to be		
DAILY MX	Daily Maximum	MAX	Please note that Airview Utilities continues to make every effo		
DAILY MX	Daily Maximum	MAX	Please note that Airview Utilities has filed to surrender and ab		
DAILY MX	Daily Maximum	MAX	Please note that some exceedances of the permit for this faci		
DAILY MX	Daily Maximum	MAX	Please note that the inaccessible location of the chlorine cont		
DAILY MX	Daily Maximum	MAX	Please note that the lab entered the data on 7/28/16 instead o		
DAILY MX	Daily Maximum	MAX	Please note that we have had problems with one of the		
DAILY MX	Daily Maximum	MAX	Regardless of the way it may look, Airview Utilities is making		
DAILY MX	Daily Maximum	MAX	Test results for this monitoring period is much improved And		
DAILY MX	Daily Maximum	MAX	The Airview treatment is very old and outdated. It has exceed		
DAILY MX	Daily Maximum	MAX	The operator is making effort to bring the plant into complianc		
DAILY MX	Daily Maximum	MAX	The operator is trying very hard to get this p[lant into compliar		

DAILY MX	Daily Maximum	MAX	The plant operator continues to make every effort to bring the
DAILY MX	Daily Maximum	MAX	
30DA AVG	30 Day Average	AVG	Airview continue to make every effort to bring thie utility into c
30DA AVG	30 Day Average	AVG	Airview Utilities continues to make efforts to bring this treatme
30DA AVG	30 Day Average	AVG	Airview Utilities continues to work with the City of Elizabethtov
30DA AVG	30 Day Average	AVG	Airview Utilities is trying on a daily basis to bring the plant into
30DA AVG	30 Day Average	AVG	CLIENT TO ENTER COMMENTS, SITE INACCESSABLE D
30DA AVG	30 Day Average	AVG	Due to very wet, stormy conditions duringthe monitoring perio
30DA AVG	30 Day Average	AVG	During the month of August we experienced a lot of problems
30DA AVG	30 Day Average	AVG	During the month of June there were periods of very heavy ra
30DA AVG	30 Day Average	AVG	Every effort is being made to bring the effluent into compliance
30DA AVG	30 Day Average	AVG	In review of the lab results, the method and location of sample
30DA AVG	30 Day Average	AVG	Midwest just took over this plant and we are working to get in
30DA AVG	30 Day Average	AVG	Note that Airview Utilities and the operator are working to brin
30DA AVG	30 Day Average	AVG	Note: This is a very old package plant that really needs to be
30DA AVG	30 Day Average	AVG	Please note that Airview Utilities continues to make every effo
30DA AVG	30 Day Average	AVG	Please note that Airview Utilities has filed to surrender and ab
30DA AVG	30 Day Average	AVG	Please note that some exceedances of the permit for this faci
30DA AVG	30 Day Average	AVG	Please note that the inaccessible location of the chlorine cont
30DA AVG	30 Day Average	AVG	Please note that the lab entered the data on 7/28/16 instead o
30DA AVG	30 Day Average	AVG	Please note that we have had problems with one of the
30DA AVG	30 Day Average	AVG	Regardless of the way it may look, Airview Utilities is making
30DA AVG	30 Day Average	AVG	Test results for this monitoring period is much improved And
30DA AVG	30 Day Average	AVG	The Airview treatment is very old and outdated. It has exceed
30DA AVG	30 Day Average	AVG	The operator is making effort to bring the plant into compliance
30DA AVG	30 Day Average	AVG	The operator is trying very hard to get this p[lant into compliar
30DA AVG	30 Day Average	AVG	The plant operator continues to make every effort to bring the
30DA AVG	30 Day Average	AVG	
DAILY MX	Daily Maximum	MAX	Airview continue to make every effort to bring thie utility into c
DAILY MX	Daily Maximum	MAX	Airview Utilities continues to make efforts to bring this treatme
DAILY MX	Daily Maximum	MAX	Airview Utilities continues to work with the City of Elizabethtov
DAILY MX	Daily Maximum	MAX	Airview Utilities is trying on a daily basis to bring the plant into
DAILY MX	Daily Maximum	MAX	CLIENT TO ENTER COMMENTS, SITE INACCESSABLE D
DAILY MX	Daily Maximum	MAX	Due to very wet, stormy conditions duringthe monitoring perio
DAILY MX	Daily Maximum	MAX	During the month of August we experienced a lot of problems
DAILY MX	Daily Maximum	MAX	During the month of June there were periods of very heavy ra
DAILY MX	Daily Maximum	MAX	Every effort is being made to bring the effluent into compliance
DAILY MX	Daily Maximum	MAX	In review of the lab results, the method and location of sample
DAILY MX	Daily Maximum	MAX	Midwest just took over this plant and we are working to get in
DAILY MX	Daily Maximum	MAX	Note that Airview Utilities and the operator are working to brin
DAILY MX	Daily Maximum	MAX	Note: This is a very old package plant that really needs to be
DAILY MX	Daily Maximum	MAX	Please note that Airview Utilities continues to make every effo
DAILY MX	Daily Maximum	MAX	Please note that Airview Utilities has filed to surrender and ab
DAILY MX	Daily Maximum	MAX	Please note that some exceedances of the permit for this faci
DAILY MX	Daily Maximum	MAX	Please note that the inaccessible location of the chlorine cont
DAILY MX	Daily Maximum	MAX	Please note that the lab entered the data on 7/28/16 instead o
DAILY MX	Daily Maximum	MAX	Please note that we have had problems with one of the
DAILY MX	Daily Maximum	MAX	Regardless of the way it may look, Airview Utilities is making
DAILY MX	Daily Maximum	MAX	Test results for this monitoring period is much improved And
DAILY MX	Daily Maximum	MAX	The Airview treatment is very old and outdated. It has exceed
DAILY MX	Daily Maximum	MAX	The operator is making effort to bring the plant into compliance

DAILY MX	Daily Maximum	MAX	The operator is trying very hard to get this p[lant into compliar
DAILY MX	Daily Maximum	MAX	The plant operator continues to make every effort to bring the
DAILY MX	Daily Maximum	MAX	
30DA AVG	30 Day Average	AVG	Airview continues to work with the City of Elizabethtown to tak
30DA AVG	30 Day Average	AVG	Airview does continue to operate the plant and try to bring the
30DA AVG	30 Day Average	AVG	Airview Utilities and the operator are trying very hard to bring
30DA AVG	30 Day Average	AVG	Airview Utilities continues to make every effort to bring the tre
30DA AVG	30 Day Average	AVG	Airview Utilities continues to work with the City of Elizabethtov
30DA AVG	30 Day Average	AVG	Airview Utilities is trying very hard to properly operate and ma
30DA AVG	30 Day Average	AVG	Due to the very wet conditions during the month of March the
30DA AVG	30 Day Average	AVG	During the early days of March the plant was still recovering fr
30DA AVG	30 Day Average	AVG	During the month of January it was discovered that the overflo
30DA AVG	30 Day Average	AVG	Generally the excursions are due to wet weather and heavy fl
30DA AVG	30 Day Average	AVG	It appears that Airview Utilities may be getting closer to being
30DA AVG	30 Day Average	AVG	It is very difficult to get this plant into compliance with the extr
30DA AVG	30 Day Average	AVG	It would be greatly appreciated if the Division of Water could a
30DA AVG	30 Day Average	AVG	Note: A request has been made to the DCA and the Louisville
30DA AVG	30 Day Average	AVG	Note: That with the authorization of the Louisville regional Offi
30DA AVG	30 Day Average	AVG	Please excuse the latness of submitting this DMR. It was an
30DA AVG	30 Day Average	AVG	Please note that Airview is making every effort to bring the pla
30DA AVG	30 Day Average	AVG	Please note that Airview Utilites is working to bring the treatm
30DA AVG	30 Day Average	AVG	Please note that the operator makes every effort to bring the p
30DA AVG	30 Day Average	AVG	Please note that we making some improvements at the plant i
30DA AVG	30 Day Average	AVG	The extremely wet weather and I/I are causing many problems
30DA AVG	30 Day Average	AVG	The extreme winter weather conditions, snow, ice and subzer
30DA AVG	30 Day Average	AVG	The operator is making every effort to bring the plant into com
30DA AVG	30 Day Average	AVG	The plant operator is making every effort to bring the plant into
30DA AVG	30 Day Average	AVG	The TRC exceedance is due to the lack of dechlorination at th
30DA AVG	30 Day Average	AVG	
DAILY MX	Daily Maximum	MAX	Airview continues to work with the City of Elizabethtown to tak
DAILY MX	Daily Maximum	MAX	Airview does continue to operate the plant and try to bring the
DAILY MX	Daily Maximum	MAX	Airview Utilities and the operator are trying very hard to bring
DAILY MX	Daily Maximum	MAX	Airview Utilities continues to make every effort to bring the tre
DAILY MX	Daily Maximum	MAX	Airview Utilities continues to work with the City of Elizabethtov
DAILY MX	Daily Maximum	MAX	Airview Utilities is trying very hard to properly operate and ma
DAILY MX	Daily Maximum	MAX	Due to the very wet conditions during the month of March the
DAILY MX	Daily Maximum	MAX	During the early days of March the plant was still recovering fr
DAILY MX	Daily Maximum	MAX	During the month of January it was discovered that the overflo
DAILY MX	Daily Maximum	MAX	Generally the excursions are due to wet weather and heavy fl
DAILY MX	Daily Maximum	MAX	It appears that Airview Utilities may be getting closer to being
DAILY MX	Daily Maximum	MAX	It is very difficult to get this plant into compliance with the extr
DAILY MX	Daily Maximum	MAX	It would be greatly appreciated if the Division of Water could a
DAILY MX	Daily Maximum	MAX	Note: A request has been made to the DCA and the Louisville
DAILY MX	Daily Maximum	MAX	Note: That with the authorization of the Louisville regional Offi
DAILY MX	Daily Maximum	MAX	Please excuse the latness of submitting this DMR. It was an
DAILY MX	Daily Maximum	MAX	Please note that Airview is making every effort to bring the pla
DAILY MX	Daily Maximum	MAX	Please note that Airview Utilites is working to bring the treatm
DAILY MX	Daily Maximum	MAX	Please note that the operator makes every effort to bring the p
DAILY MX	Daily Maximum	MAX	Please note that we making some improvements at the plant i
DAILY MX	Daily Maximum	MAX	The extremely wet weather and I/I are causing many problems
DAILY MX	Daily Maximum	MAX	The extreme winter weather conditions, snow, ice and subzer

DAILY MX	Daily Maximum	MAX	The operator is making every effort to bring the plant into com
DAILY MX	Daily Maximum	MAX	The plant operator is making every effort to bring the plant int
DAILY MX	Daily Maximum	MAX	The TRC exceedance is due to the lack of dechlorination at th
DAILY MX	Daily Maximum	MAX	
30DA AVG	30 Day Average	AVG	Airview continues to work with the City of Elizabethtown to tak
30DA AVG	30 Day Average	AVG	Airview does continue to operate the plant and try to bring the
30DA AVG	30 Day Average	AVG	Airview Utilities and the operator are trying very hard to bring
30DA AVG	30 Day Average	AVG	Airview Utilities continues to make every effort to bring the tre
30DA AVG	30 Day Average	AVG	Airview Utilities continues to work with the City of Elizabethtov
30DA AVG	30 Day Average	AVG	Airview Utilities is trying very hard to properly operate and ma
30DA AVG	30 Day Average	AVG	Due to the very wet conditions during the month of March the
30DA AVG	30 Day Average	AVG	During the early days of March the plant was still recovering fr
30DA AVG	30 Day Average	AVG	During the month of January it was discovered that the overflo
30DA AVG	30 Day Average	AVG	Generally the excursions are due to wet weather and heavy flo
30DA AVG	30 Day Average	AVG	It appears that Airview Utilities may be getting closer to being
30DA AVG	30 Day Average	AVG	It is very difficult to get this plant into compliance with the extr
30DA AVG	30 Day Average	AVG	It would be greatly appreciated if the Division of Water could a
30DA AVG	30 Day Average	AVG	Note: A request has been made to the DCA and the Louisville
30DA AVG	30 Day Average	AVG	Note: That with the authorization of the Louisville regional Offi
30DA AVG	30 Day Average	AVG	Please excuse the latness of submitting this DMR. It was an
30DA AVG	30 Day Average	AVG	Please note that Airview is making every effort to bring the pla
30DA AVG	30 Day Average	AVG	Please note that Airview Utilites is working to bring the treatm
30DA AVG	30 Day Average	AVG	Please note that the operator makes every effort to bring the p
30DA AVG	30 Day Average	AVG	Please note that we making some improvements at the plant i
30DA AVG	30 Day Average	AVG	The extremely wet weather and I/I are causing many problems
30DA AVG	30 Day Average	AVG	The extreme winter weather conditions, snow, ice and subzer
30DA AVG	30 Day Average	AVG	The operator is making every effort to bring the plant into com
30DA AVG	30 Day Average	AVG	The plant operator is making every effort to bring the plant int
30DA AVG	30 Day Average	AVG	The TRC exceedance is due to the lack of dechlorination at th
30DA AVG	30 Day Average	AVG	
DAILY MX	Daily Maximum	MAX	Airview continues to work with the City of Elizabethtown to tak
DAILY MX	Daily Maximum	MAX	Airview does continue to operate the plant and try to bring the
DAILY MX	Daily Maximum	MAX	Airview Utilities and the operator are trying very hard to bring
DAILY MX	Daily Maximum	MAX	Airview Utilities continues to make every effort to bring the tre
DAILY MX	Daily Maximum	MAX	Airview Utilities continues to work with the City of Elizabethtov
DAILY MX	Daily Maximum	MAX	Airview Utilities is trying very hard to properly operate and ma
DAILY MX	Daily Maximum	MAX	Due to the very wet conditions during the month of March the
DAILY MX	Daily Maximum	MAX	During the early days of March the plant was still recovering fr
DAILY MX	Daily Maximum	MAX	During the month of January it was discovered that the overflo
DAILY MX	Daily Maximum	MAX	Generally the excursions are due to wet weather and heavy flo
DAILY MX	Daily Maximum	MAX	It appears that Airview Utilities may be getting closer to being
DAILY MX	Daily Maximum	MAX	It is very difficult to get this plant into compliance with the extr
DAILY MX	Daily Maximum	MAX	It would be greatly appreciated if the Division of Water could a
DAILY MX	Daily Maximum	MAX	Note: A request has been made to the DCA and the Louisville
DAILY MX	Daily Maximum	MAX	Note: That with the authorization of the Louisville regional Offi
DAILY MX	Daily Maximum	MAX	Please excuse the latness of submitting this DMR. It was an
DAILY MX	Daily Maximum	MAX	Please note that Airview is making every effort to bring the pla
DAILY MX	Daily Maximum	MAX	Please note that Airview Utilites is working to bring the treatm
DAILY MX	Daily Maximum	MAX	Please note that the operator makes every effort to bring the p
DAILY MX	Daily Maximum	MAX	Please note that we making some improvements at the plant i
DAILY MX	Daily Maximum	MAX	The extremely wet weather and I/I are causing many problems

DAILY MX	Daily Maximum	MAX	The extreme winter weather conditions, snow, ice and subzer
DAILY MX	Daily Maximum	MAX	The operator is making every effort to bring the plant into com
DAILY MX	Daily Maximum	MAX	The plant operator is making every effort to bring the plant int
DAILY MX	Daily Maximum	MAX	The TRC exceedance is due to the lack of dechlorination at th
DAILY MX	Daily Maximum	MAX	
30DA AVG	30 Day Average	AVG	Airview continues to work with the City of Elizabethtown to tak
30DA AVG	30 Day Average	AVG	Airview continue to make every effort to bring thie utility into c
30DA AVG	30 Day Average	AVG	Airview does continue to operate the plant and try to bring the
30DA AVG	30 Day Average	AVG	Airview Utilities and the operator are trying very hard to bring
30DA AVG	30 Day Average	AVG	Airview Utilities continues to make efforts to bring this treatme
30DA AVG	30 Day Average	AVG	Airview Utilities continues to make every effort to bring the tre
30DA AVG	30 Day Average	AVG	Airview Utilities continues to work with the City of Elizabethtov
30DA AVG	30 Day Average	AVG	Airview Utilities continues to work with the City of Elizabethtov
30DA AVG	30 Day Average	AVG	Airview Utilities is trying on a daily basis to bring the plant into
30DA AVG	30 Day Average	AVG	Airview Utilities is trying very hard to properly operate and ma
30DA AVG	30 Day Average	AVG	CLIENT TO ENTER COMMENTS, SITE INACCESSABLE D
30DA AVG	30 Day Average	AVG	Due to the very wet conditions during the month of March the
30DA AVG	30 Day Average	AVG	Due to very wet, stormy conditions duringthe monitoring perio
30DA AVG	30 Day Average	AVG	During the early days of March the plant was still recovering fr
30DA AVG	30 Day Average	AVG	During the month of August we experienced a lot of problems
30DA AVG	30 Day Average	AVG	During the month of January it was discovered that the overflo
30DA AVG	30 Day Average	AVG	During the month of June there were periods of very heavy ra
30DA AVG	30 Day Average	AVG	Every effort is being made to bring the effluent into compliance
30DA AVG	30 Day Average	AVG	Generally the excursions are due to wet weather and heavy fl
30DA AVG	30 Day Average	AVG	In review of the lab results, the method and location of sample
30DA AVG	30 Day Average	AVG	It appears that Airview Utilities may be getting closer to being
30DA AVG	30 Day Average	AVG	It is very difficult to get this plant into compliance with the extr
30DA AVG	30 Day Average	AVG	It would be greatly appreciated if the Division of Water could a
30DA AVG	30 Day Average	AVG	Midwest just took over this plant and we are working to get in
30DA AVG	30 Day Average	AVG	Note: A request has been made to the DCA and the Louisville
30DA AVG	30 Day Average	AVG	Note that Airview Utilities and the operator are working to brin
30DA AVG	30 Day Average	AVG	Note: That with the authorization of the Louisville regional Offi
30DA AVG	30 Day Average	AVG	Note: This is a very old package plant that really needs to be
30DA AVG	30 Day Average	AVG	Please excuse the latness of submitting this DMR. It was an
30DA AVG	30 Day Average	AVG	Please note that Airview is making every effort to bring the pla
30DA AVG	30 Day Average	AVG	Please note that Airview Utilites is working to bring the treatm
30DA AVG	30 Day Average	AVG	Please note that Airview Utilities continues to make every effo
30DA AVG	30 Day Average	AVG	Please note that Airview Utilities has filed to surrender and ab
30DA AVG	30 Day Average	AVG	Please note that some exceedances of the permit for this faci
30DA AVG	30 Day Average	AVG	Please note that the inaccessible location of the chlorine cont
30DA AVG	30 Day Average	AVG	Please note that the lab entered the data on 7/28/16 instead o
30DA AVG	30 Day Average	AVG	Please note that the operator makes every effort to bring the p
30DA AVG	30 Day Average	AVG	Please note that we have had problems with one of the
30DA AVG	30 Day Average	AVG	Please note that we making some improvements at the plant i
30DA AVG	30 Day Average	AVG	Regardless of the way it may look, Airview Utilities is making e
30DA AVG	30 Day Average	AVG	Test results for this monitoring period is much improved And o
30DA AVG	30 Day Average	AVG	The Airview treatment is very old and outdated. It has exceed
30DA AVG	30 Day Average	AVG	The extremely wet weather and I/I are causing many problems
30DA AVG	30 Day Average	AVG	The extreme winter weather conditions, snow, ice and subzer
30DA AVG	30 Day Average	AVG	The operator is making effort to bring the plant into compliance
30DA AVG	30 Day Average	AVG	The operator is making every effort to bring the plant into com

30DA AVG	30 Day Average	AVG	The operator is trying very hard to get this p[lant into compliar
30DA AVG	30 Day Average	AVG	The plant operator continues to make every effort to bring the
30DA AVG	30 Day Average	AVG	The plant operator is making every effort to bring the plant int
30DA AVG	30 Day Average	AVG	The TRC exceedance is due to the lack of dechlorination at th
30DA AVG	30 Day Average	AVG	
INST MAX	Instantaneous Maxi	MAX	Airview continues to work with the City of Elizabethtown to tak
INST MAX	Instantaneous Maxi	MAX	Airview continue to make every effort to bring thie utility into c
INST MAX	Instantaneous Maxi	MAX	Airview does continue to operate the plant and try to bring the
INST MAX	Instantaneous Maxi	MAX	Airview Utilities and the operator are trying very hard to bring
INST MAX	Instantaneous Maxi	MAX	Airview Utilities continues to make efforts to bring this treatme
INST MAX	Instantaneous Maxi	MAX	Airview Utilities continues to make every effort to bring the tre
INST MAX	Instantaneous Maxi	MAX	Airview Utilities continues to work with the City of Elizabethtov
INST MAX	Instantaneous Maxi	MAX	Airview Utilities continues to work with the City of Elizabethtov
INST MAX	Instantaneous Maxi	MAX	Airview Utilities is trying on a daily basis to bring the plant into
INST MAX	Instantaneous Maxi	MAX	Airview Utilities is trying very hard to properly operate and ma
INST MAX	Instantaneous Maxi	MAX	CLIENT TO ENTER COMMENTS, SITE INACCESSABLE D
INST MAX	Instantaneous Maxi	MAX	Due to the very wet conditions during the month of March the
INST MAX	Instantaneous Maxi	MAX	Due to very wet, stormy conditions duringthe monitoring perio
INST MAX	Instantaneous Maxi	MAX	During the early days of March the plant was still recovering fr
INST MAX	Instantaneous Maxi	MAX	During the month of August we experienced a lot of problems
INST MAX	Instantaneous Maxi	MAX	During the month of January it was discovered that the overflo
INST MAX	Instantaneous Maxi	MAX	During the month of June there were periods of very heavy ra
INST MAX	Instantaneous Maxi	MAX	Every effort is being made to bring the effluent into compliance
INST MAX	Instantaneous Maxi	MAX	Generally the excursions are due to wet weather and heavy fl
INST MAX	Instantaneous Maxi	MAX	In review of the lab results, the method and location of sample
INST MAX	Instantaneous Maxi	MAX	It appears that Airview Utilities may be getting closer to being
INST MAX	Instantaneous Maxi	MAX	It is very difficult to get this plant into compliance with the extr
INST MAX	Instantaneous Maxi	MAX	It would be greatly appreciated if the Division of Water could a
INST MAX	Instantaneous Maxi	MAX	Midwest just took over this plant and we are working to get in
INST MAX	Instantaneous Maxi	MAX	Note: A request has been made to the DCA and the Louisville
INST MAX	Instantaneous Maxi	MAX	Note that Airview Utilities and the operator are working to brin
INST MAX	Instantaneous Maxi	MAX	Note: That with the authorization of the Louisville regional Offi
INST MAX	Instantaneous Maxi	MAX	Note: This is a very old package plant that really needs to be
INST MAX	Instantaneous Maxi	MAX	Please excuse the latness of submitting this DMR. It was an
INST MAX	Instantaneous Maxi	MAX	Please note that Airview is making every effort to bring the pla
INST MAX	Instantaneous Maxi	MAX	Please note that Airview Utilites is working to bring the treatm
INST MAX	Instantaneous Maxi	MAX	Please note that Airview Utilities continues to make every effo
INST MAX	Instantaneous Maxi	MAX	Please note that Airview Utilities has filed to surrender and ab
INST MAX	Instantaneous Maxi	MAX	Please note that some exceedances of the permit for this faci
INST MAX	Instantaneous Maxi	MAX	Please note that the inaccessible location of the chlorine cont
INST MAX	Instantaneous Maxi	MAX	Please note that the lab entered the data on 7/28/16 instead o
INST MAX	Instantaneous Maxi	MAX	Please note that the operator makes every effort to bring the p
INST MAX	Instantaneous Maxi	MAX	Please note that we have had problems with one of the
INST MAX	Instantaneous Maxi	MAX	Please note that we making some improvements at the plant i
INST MAX	Instantaneous Maxi	MAX	Regardless of the way it may look, Airview Utilities is making e
INST MAX	Instantaneous Maxi	MAX	Test results for this monitoring period is much improved And o
INST MAX	Instantaneous Maxi	MAX	The Airview treatment is very old and outdated. It has exceed
INST MAX	Instantaneous Maxi	MAX	The extremely wet weather and I/I are causing many problems
INST MAX	Instantaneous Maxi	MAX	The extreme winter weather conditions, snow, ice and subzer
INST MAX	Instantaneous Maxi	MAX	The operator is making effort to bring the plant into compliance
INST MAX	Instantaneous Maxi	MAX	The operator is making every effort to bring the plant into com

INST MAX	Instantaneous Maxi	MAX	The operator is trying very hard to get this p[lant into compliar
INST MAX	Instantaneous Maxi	MAX	The plant operator continues to make every effort to bring the
INST MAX	Instantaneous Maxi	MAX	The plant operator is making every effort to bring the plant int
INST MAX	Instantaneous Maxi	MAX	The TRC exceedance is due to the lack of dechlorination at th
INST MAX	Instantaneous Maxi	MAX	
30DA AVG	30 Day Average	AVG	Airview continues to work with the City of Elizabethtown to tak
30DA AVG	30 Day Average	AVG	Airview continue to make every effort to bring thie utility into c
30DA AVG	30 Day Average	AVG	Airview does continue to operate the plant and try to bring the
30DA AVG	30 Day Average	AVG	Airview Utilities and the operator are trying very hard to bring
30DA AVG	30 Day Average	AVG	Airview Utilities continues to make efforts to bring this treatme
30DA AVG	30 Day Average	AVG	Airview Utilities continues to make every effort to bring the tre
30DA AVG	30 Day Average	AVG	Airview Utilities continues to work with the City of Elizabethtov
30DA AVG	30 Day Average	AVG	Airview Utilities continues to work with the City of Elizabethtov
30DA AVG	30 Day Average	AVG	Airview Utilities is trying on a daily basis to bring the plant into
30DA AVG	30 Day Average	AVG	Airview Utilities is trying very hard to properly operate and ma
30DA AVG	30 Day Average	AVG	CLIENT TO ENTER COMMENTS, SITE INACCESSABLE D
30DA AVG	30 Day Average	AVG	Due to the very wet conditions during the month of March the
30DA AVG	30 Day Average	AVG	Due to very wet, stormy conditions duringthe monitoring perio
30DA AVG	30 Day Average	AVG	During the early days of March the plant was still recovering fr
30DA AVG	30 Day Average	AVG	During the month of August we experienced a lot of problems
30DA AVG	30 Day Average	AVG	During the month of January it was discovered that the overflo
30DA AVG	30 Day Average	AVG	During the month of June there were periods of very heavy ra
30DA AVG	30 Day Average	AVG	Every effort is being made to bring the effluent into compliance
30DA AVG	30 Day Average	AVG	Generally the excursions are due to wet weather and heavy fl
30DA AVG	30 Day Average	AVG	In review of the lab results, the method and location of sample
30DA AVG	30 Day Average	AVG	It appears that Airview Utilities may be getting closer to being
30DA AVG	30 Day Average	AVG	It is very difficult to get this plant into compliance with the extr
30DA AVG	30 Day Average	AVG	It would be greatly appreciated if the Division of Water could a
30DA AVG	30 Day Average	AVG	Midwest just took over this plant and we are working to get in
30DA AVG	30 Day Average	AVG	Note: A request has been made to the DCA and the Louisville
30DA AVG	30 Day Average	AVG	Note that Airview Utilities and the operator are working to brin
30DA AVG	30 Day Average	AVG	Note: That with the authorization of the Louisville regional Offi
30DA AVG	30 Day Average	AVG	Note: This is a very old package plant that really needs to be
30DA AVG	30 Day Average	AVG	Please excuse the latness of submitting this DMR. It was an
30DA AVG	30 Day Average	AVG	Please note that Airview is making every effort to bring the pla
30DA AVG	30 Day Average	AVG	Please note that Airview Utilites is working to bring the treatm
30DA AVG	30 Day Average	AVG	Please note that Airview Utilities continues to make every effo
30DA AVG	30 Day Average	AVG	Please note that Airview Utilities has filed to surrender and ab
30DA AVG	30 Day Average	AVG	Please note that some exceedances of the permit for this faci
30DA AVG	30 Day Average	AVG	Please note that the inaccessible location of the chlorine cont
30DA AVG	30 Day Average	AVG	Please note that the lab entered the data on 7/28/16 instead o
30DA AVG	30 Day Average	AVG	Please note that the operator makes every effort to bring the p
30DA AVG	30 Day Average	AVG	Please note that we have had problems with one of the
30DA AVG	30 Day Average	AVG	Please note that we making some improvements at the plant i
30DA AVG	30 Day Average	AVG	Regardless of the way it may look, Airview Utilities is making e
30DA AVG	30 Day Average	AVG	Test results for this monitoring period is much improved And o
30DA AVG	30 Day Average	AVG	The Airview treatment is very old and outdated. It has exceed
30DA AVG	30 Day Average	AVG	The extremely wet weather and I/I are causing many problems
30DA AVG	30 Day Average	AVG	The extreme winter weather conditions, snow, ice and subzer
30DA AVG	30 Day Average	AVG	The operator is making effort to bring the plant into compliance
30DA AVG	30 Day Average	AVG	The operator is making every effort to bring the plant into com

30DA AVG	30 Day Average	AVG	The operator is trying very hard to get this p[lant into compliar
30DA AVG	30 Day Average	AVG	The plant operator continues to make every effort to bring the
30DA AVG	30 Day Average	AVG	The plant operator is making every effort to bring the plant int
30DA AVG	30 Day Average	AVG	The TRC exceedance is due to the lack of dechlorination at th
30DA AVG	30 Day Average	AVG	
DAILY MX	Daily Maximum	MAX	Airview continues to work with the City of Elizabethtown to tak
DAILY MX	Daily Maximum	MAX	Airview continue to make every effort to bring thie utility into c
DAILY MX	Daily Maximum	MAX	Airview does continue to operate the plant and try to bring the
DAILY MX	Daily Maximum	MAX	Airview Utilities and the operator are trying very hard to bring
DAILY MX	Daily Maximum	MAX	Airview Utilities continues to make efforts to bring this treatme
DAILY MX	Daily Maximum	MAX	Airview Utilities continues to make every effort to bring the tre
DAILY MX	Daily Maximum	MAX	Airview Utilities continues to work with the City of Elizabethtov
DAILY MX	Daily Maximum	MAX	Airview Utilities continues to work with the City of Elizabethtov
DAILY MX	Daily Maximum	MAX	Airview Utilities is trying on a daily basis to bring the plant into
DAILY MX	Daily Maximum	MAX	Airview Utilities is trying very hard to properly operate and ma
DAILY MX	Daily Maximum	MAX	CLIENT TO ENTER COMMENTS, SITE INACCESSABLE D
DAILY MX	Daily Maximum	MAX	Due to the very wet conditions during the month of March the
DAILY MX	Daily Maximum	MAX	Due to very wet, stormy conditions duringthe monitoring perio
DAILY MX	Daily Maximum	MAX	During the early days of March the plant was still recovering fr
DAILY MX	Daily Maximum	MAX	During the month of August we experienced a lot of problems
DAILY MX	Daily Maximum	MAX	During the month of January it was discovered that the overflo
DAILY MX	Daily Maximum	MAX	During the month of June there were periods of very heavy ra
DAILY MX	Daily Maximum	MAX	Every effort is being made to bring the effluent into compliance
DAILY MX	Daily Maximum	MAX	Generally the excursions are due to wet weather and heavy fl
DAILY MX	Daily Maximum	MAX	In review of the lab results, the method and location of sample
DAILY MX	Daily Maximum	MAX	It appears that Airview Utilities may be getting closer to being
DAILY MX	Daily Maximum	MAX	It is very difficult to get this plant into compliance with the extr
DAILY MX	Daily Maximum	MAX	It would be greatly appreciated if the Division of Water could a
DAILY MX	Daily Maximum	MAX	Midwest just took over this plant and we are working to get in
DAILY MX	Daily Maximum	MAX	Note: A request has been made to the DCA and the Louisville
DAILY MX	Daily Maximum	MAX	Note that Airview Utilities and the operator are working to brin
DAILY MX	Daily Maximum	MAX	Note: That with the authorization of the Louisville regional Offi
DAILY MX	Daily Maximum	MAX	Note: This is a very old package plant that really needs to be
DAILY MX	Daily Maximum	MAX	Please excuse the latness of submitting this DMR. It was an
DAILY MX	Daily Maximum	MAX	Please note that Airview is making every effort to bring the pla
DAILY MX	Daily Maximum	MAX	Please note that Airview Utilites is working to bring the treatm
DAILY MX	Daily Maximum	MAX	Please note that Airview Utilities continues to make every effo
DAILY MX	Daily Maximum	MAX	Please note that Airview Utilities has filed to surrender and ab
DAILY MX	Daily Maximum	MAX	Please note that some exceedances of the permit for this faci
DAILY MX	Daily Maximum	MAX	Please note that the inaccessible location of the chlorine cont
DAILY MX	Daily Maximum	MAX	Please note that the lab entered the data on 7/28/16 instead o
DAILY MX	Daily Maximum	MAX	Please note that the operator makes every effort to bring the p
DAILY MX	Daily Maximum	MAX	Please note that we have had problems with one of the
DAILY MX	Daily Maximum	MAX	Please note that we making some improvements at the plant i
DAILY MX	Daily Maximum	MAX	Regardless of the way it may look, Airview Utilities is making e
DAILY MX	Daily Maximum	MAX	Test results for this monitoring period is much improved And o
DAILY MX	Daily Maximum	MAX	The Airview treatment is very old and outdated. It has exceed
DAILY MX	Daily Maximum	MAX	The extremely wet weather and I/I are causing many problems
DAILY MX	Daily Maximum	MAX	The extreme winter weather conditions, snow, ice and subzer
DAILY MX	Daily Maximum	MAX	The operator is making effort to bring the plant into compliance
DAILY MX	Daily Maximum	MAX	The operator is making every effort to bring the plant into com

DAILY MX	Daily Maximum	MAX	The operator is trying very hard to get this p[lant into compliar
DAILY MX	Daily Maximum	MAX	The plant operator continues to make every effort to bring the
DAILY MX	Daily Maximum	MAX	The plant operator is making every effort to bring the plant int
DAILY MX	Daily Maximum	MAX	The TRC exceedance is due to the lack of dechlorination at th
DAILY MX	Daily Maximum	MAX	
30DA GEO	30 Day Geometric	AVG	Airview continues to work with the City of Elizabethtown to tak
30DA GEO	30 Day Geometric	AVG	Airview continue to make every effort to bring thie utility into c
30DA GEO	30 Day Geometric	AVG	Airview does continue to operate the plant and try to bring the
30DA GEO	30 Day Geometric	AVG	Airview Utilities and the operator are trying very hard to bring
30DA GEO	30 Day Geometric	AVG	Airview Utilities continues to make efforts to bring this treatme
30DA GEO	30 Day Geometric	AVG	Airview Utilities continues to make every effort to bring the tre
30DA GEO	30 Day Geometric	AVG	Airview Utilities continues to work with the City of Elizabethtov
30DA GEO	30 Day Geometric	AVG	Airview Utilities continues to work with the City of Elizabethtov
30DA GEO	30 Day Geometric	AVG	Airview Utilities is trying on a daily basis to bring the plant into
30DA GEO	30 Day Geometric	AVG	Airview Utilities is trying very hard to properly operate and ma
30DA GEO	30 Day Geometric	AVG	CLIENT TO ENTER COMMENTS, SITE INACCESSABLE D
30DA GEO	30 Day Geometric	AVG	Due to the very wet conditions during the month of March the
30DA GEO	30 Day Geometric	AVG	Due to very wet, stormy conditions duringthe monitoring perio
30DA GEO	30 Day Geometric	AVG	During the early days of March the plant was still recovering fr
30DA GEO	30 Day Geometric	AVG	During the month of August we experienced a lot of problems
30DA GEO	30 Day Geometric	AVG	During the month of January it was discovered that the overflo
30DA GEO	30 Day Geometric	AVG	During the month of June there were periods of very heavy ra
30DA GEO	30 Day Geometric	AVG	Every effort is being made to bring the effluent into compliance
30DA GEO	30 Day Geometric	AVG	Generally the excursions are due to wet weather and heavy fl
30DA GEO	30 Day Geometric	AVG	In review of the lab results, the method and location of sample
30DA GEO	30 Day Geometric	AVG	It appears that Airview Utilities may be getting closer to being
30DA GEO	30 Day Geometric	AVG	It is very difficult to get this plant into compliance with the extr
30DA GEO	30 Day Geometric	AVG	It would be greatly appreciated if the Division of Water could a
30DA GEO	30 Day Geometric	AVG	Midwest just took over this plant and we are working to get in
30DA GEO	30 Day Geometric	AVG	Note: A request has been made to the DCA and the Louisville
30DA GEO	30 Day Geometric	AVG	Note that Airview Utilities and the operator are working to brin
30DA GEO	30 Day Geometric	AVG	Note: That with the authorization of the Louisville regional Offi
30DA GEO	30 Day Geometric	AVG	Note: This is a very old package plant that really needs to be
30DA GEO	30 Day Geometric	AVG	Please excuse the latness of submitting this DMR. It was an
30DA GEO	30 Day Geometric	AVG	Please note that Airview is making every effort to bring the pla
30DA GEO	30 Day Geometric	AVG	Please note that Airview Utilites is working to bring the treatm
30DA GEO	30 Day Geometric	AVG	Please note that Airview Utilities continues to make every effo
30DA GEO	30 Day Geometric	AVG	Please note that Airview Utilities has filed to surrender and ab
30DA GEO	30 Day Geometric	AVG	Please note that some exceedances of the permit for this faci
30DA GEO	30 Day Geometric	AVG	Please note that the inaccessible location of the chlorine cont
30DA GEO	30 Day Geometric	AVG	Please note that the lab entered the data on 7/28/16 instead o
30DA GEO	30 Day Geometric	AVG	Please note that the operator makes every effort to bring the p
30DA GEO	30 Day Geometric	AVG	Please note that we have had problems with one of the
30DA GEO	30 Day Geometric	AVG	Please note that we making some improvements at the plant i
30DA GEO	30 Day Geometric	AVG	Regardless of the way it may look, Airview Utilities is making
30DA GEO	30 Day Geometric	AVG	Test results for this monitoring period is much improved And o
30DA GEO	30 Day Geometric	AVG	The Airview treatment is very old and outdated. It has exceed
30DA GEO	30 Day Geometric	AVG	The extremely wet weather and I/I are causing many problems
30DA GEO	30 Day Geometric	AVG	The extreme winter weather conditions, snow, ice and subzer
30DA GEO	30 Day Geometric	AVG	The operator is making effort to bring the plant into compliance
30DA GEO	30 Day Geometric	AVG	The operator is making every effort to bring the plant into com

30DA GEO	30 Day Geometric	AVG	The operator is trying very hard to get this p[lant into compliar
30DA GEO	30 Day Geometric	AVG	The plant operator continues to make every effort to bring the
30DA GEO	30 Day Geometric	AVG	The plant operator is making every effort to bring the plant int
30DA GEO	30 Day Geometric	AVG	The TRC exceedance is due to the lack of dechlorination at th
30DA GEO	30 Day Geometric	AVG	
7 DA GEO	7 Day Geometric	AVG	Airview continues to work with the City of Elizabethtown to tak
7 DA GEO	7 Day Geometric	AVG	Airview continue to make every effort to bring thie utility into c
7 DA GEO	7 Day Geometric	AVG	Airview does continue to operate the plant and try to bring the
7 DA GEO	7 Day Geometric	AVG	Airview Utilities and the operator are trying very hard to bring
7 DA GEO	7 Day Geometric	AVG	Airview Utilities continues to make efforts to bring this treatme
7 DA GEO	7 Day Geometric	AVG	Airview Utilities continues to make every effort to bring the tre
7 DA GEO	7 Day Geometric	AVG	Airview Utilities continues to work with the City of Elizabethtov
7 DA GEO	7 Day Geometric	AVG	Airview Utilities continues to work with the City of Elizabethtov
7 DA GEO	7 Day Geometric	AVG	Airview Utilities is trying on a daily basis to bring the plant into
7 DA GEO	7 Day Geometric	AVG	Airview Utilities is trying very hard to properly operate and ma
7 DA GEO	7 Day Geometric	AVG	CLIENT TO ENTER COMMENTS, SITE INACCESSABLE D
7 DA GEO	7 Day Geometric	AVG	Due to the very wet conditions during the month of March the
7 DA GEO	7 Day Geometric	AVG	Due to very wet, stormy conditions duringthe monitoring perio
7 DA GEO	7 Day Geometric	AVG	During the early days of March the plant was still recovering fr
7 DA GEO	7 Day Geometric	AVG	During the month of August we experienced a lot of problems
7 DA GEO	7 Day Geometric	AVG	During the month of January it was discovered that the overflo
7 DA GEO	7 Day Geometric	AVG	During the month of June there were periods of very heavy ra
7 DA GEO	7 Day Geometric	AVG	Every effort is being made to bring the effluent into compliance
7 DA GEO	7 Day Geometric	AVG	Generally the excursions are due to wet weather and heavy fl
7 DA GEO	7 Day Geometric	AVG	In review of the lab results, the method and location of sample
7 DA GEO	7 Day Geometric	AVG	It appears that Airview Utilities may be getting closer to being
7 DA GEO	7 Day Geometric	AVG	It is very difficult to get this plant into compliance with the extr
7 DA GEO	7 Day Geometric	AVG	It would be greatly appreciated if the Division of Water could a
7 DA GEO	7 Day Geometric	AVG	Midwest just took over this plant and we are working to get in
7 DA GEO	7 Day Geometric	AVG	Note: A request has been made to the DCA and the Louisville
7 DA GEO	7 Day Geometric	AVG	Note that Airview Utilities and the operator are working to brin
7 DA GEO	7 Day Geometric	AVG	Note: That with the authorization of the Louisville regional Offi
7 DA GEO	7 Day Geometric	AVG	Note: This is a very old package plant that really needs to be
7 DA GEO	7 Day Geometric	AVG	Please excuse the latness of submitting this DMR. It was an
7 DA GEO	7 Day Geometric	AVG	Please note that Airview is making every effort to bring the pla
7 DA GEO	7 Day Geometric	AVG	Please note that Airview Utilites is working to bring the treatm
7 DA GEO	7 Day Geometric	AVG	Please note that Airview Utilities continues to make every effo
7 DA GEO	7 Day Geometric	AVG	Please note that Airview Utilities has filed to surrender and ab
7 DA GEO	7 Day Geometric	AVG	Please note that some exceedances of the permit for this faci
7 DA GEO	7 Day Geometric	AVG	Please note that the inaccessible location of the chlorine cont
7 DA GEO	7 Day Geometric	AVG	Please note that the lab entered the data on 7/28/16 instead o
7 DA GEO	7 Day Geometric	AVG	Please note that the operator makes every effort to bring the p
7 DA GEO	7 Day Geometric	AVG	Please note that we have had problems with one of the
7 DA GEO	7 Day Geometric	AVG	Please note that we making some improvements at the plant i
7 DA GEO	7 Day Geometric	AVG	Regardless of the way it may look, Airview Utilities is making e
7 DA GEO	7 Day Geometric	AVG	Test results for this monitoring period is much improved And o
7 DA GEO	7 Day Geometric	AVG	The Airview treatment is very old and outdated. It has exceed
7 DA GEO	7 Day Geometric	AVG	The extremely wet weather and I/I are causing many problems
7 DA GEO	7 Day Geometric	AVG	The extreme winter weather conditions, snow, ice and subzer
7 DA GEO	7 Day Geometric	AVG	The operator is making effort to bring the plant into compliance
7 DA GEO	7 Day Geometric	AVG	The operator is making every effort to bring the plant into com

7 DA GEO	7 Day Geometric	AVG	The operator is trying very hard to get this p[lant into compliar
7 DA GEO	7 Day Geometric	AVG	The plant operator continues to make every effort to bring the
7 DA GEO	7 Day Geometric	AVG	The plant operator is making every effort to bring the plant int
7 DA GEO	7 Day Geometric	AVG	The TRC exceedance is due to the lack of dechlorination at th
7 DA GEO	7 Day Geometric	AVG	
30DA AVG	30 Day Average	AVG	Airview continues to work with the City of Elizabethtown to tak
30DA AVG	30 Day Average	AVG	Airview continue to make every effort to bring thie utility into c
30DA AVG	30 Day Average	AVG	Airview does continue to operate the plant and try to bring the
30DA AVG	30 Day Average	AVG	Airview Utilities and the operator are trying very hard to bring
30DA AVG	30 Day Average	AVG	Airview Utilities continues to make efforts to bring this treatme
30DA AVG	30 Day Average	AVG	Airview Utilities continues to make every effort to bring the tre
30DA AVG	30 Day Average	AVG	Airview Utilities continues to work with the City of Elizabethtov
30DA AVG	30 Day Average	AVG	Airview Utilities continues to work with the City of Elizabethtov
30DA AVG	30 Day Average	AVG	Airview Utilities is trying on a daily basis to bring the plant into
30DA AVG	30 Day Average	AVG	Airview Utilities is trying very hard to properly operate and ma
30DA AVG	30 Day Average	AVG	CLIENT TO ENTER COMMENTS, SITE INACCESSABLE D
30DA AVG	30 Day Average	AVG	Due to the very wet conditions during the month of March the
30DA AVG	30 Day Average	AVG	Due to very wet, stormy conditions duringthe monitoring perio
30DA AVG	30 Day Average	AVG	During the early days of March the plant was still recovering fr
30DA AVG	30 Day Average	AVG	During the month of August we experienced a lot of problems
30DA AVG	30 Day Average	AVG	During the month of January it was discovered that the overflo
30DA AVG	30 Day Average	AVG	During the month of June there were periods of very heavy ra
30DA AVG	30 Day Average	AVG	Every effort is being made to bring the effluent into compliance
30DA AVG	30 Day Average	AVG	Generally the excursions are due to wet weather and heavy fl
30DA AVG	30 Day Average	AVG	In review of the lab results, the method and location of sample
30DA AVG	30 Day Average	AVG	It appears that Airview Utilities may be getting closer to being
30DA AVG	30 Day Average	AVG	It is very difficult to get this plant into compliance with the extr
30DA AVG	30 Day Average	AVG	It would be greatly appreciated if the Division of Water could a
30DA AVG	30 Day Average	AVG	Midwest just took over this plant and we are working to get in
30DA AVG	30 Day Average	AVG	Note: A request has been made to the DCA and the Louisville
30DA AVG	30 Day Average	AVG	Note that Airview Utilities and the operator are working to brin
30DA AVG	30 Day Average	AVG	Note: That with the authorization of the Louisville regional Offi
30DA AVG	30 Day Average	AVG	Note: This is a very old package plant that really needs to be
30DA AVG	30 Day Average	AVG	Please excuse the latness of submitting this DMR. It was an
30DA AVG	30 Day Average	AVG	Please note that Airview is making every effort to bring the pla
30DA AVG	30 Day Average	AVG	Please note that Airview Utilites is working to bring the treatm
30DA AVG	30 Day Average	AVG	Please note that Airview Utilities continues to make every effo
30DA AVG	30 Day Average	AVG	Please note that Airview Utilities has filed to surrender and ab
30DA AVG	30 Day Average	AVG	Please note that some exceedances of the permit for this faci
30DA AVG	30 Day Average	AVG	Please note that the inaccessible location of the chlorine cont
30DA AVG	30 Day Average	AVG	Please note that the lab entered the data on 7/28/16 instead o
30DA AVG	30 Day Average	AVG	Please note that the operator makes every effort to bring the p
30DA AVG	30 Day Average	AVG	Please note that we have had problems with one of the
30DA AVG	30 Day Average	AVG	Please note that we making some improvements at the plant i
30DA AVG	30 Day Average	AVG	Regardless of the way it may look, Airview Utilities is making e
30DA AVG	30 Day Average	AVG	Test results for this monitoring period is much improved And o
30DA AVG	30 Day Average	AVG	The Airview treatment is very old and outdated. It has exceed
30DA AVG	30 Day Average	AVG	The extremely wet weather and I/I are causing many problems
30DA AVG	30 Day Average	AVG	The extreme winter weather conditions, snow, ice and subzer
30DA AVG	30 Day Average	AVG	The operator is making effort to bring the plant into compliance
30DA AVG	30 Day Average	AVG	The operator is making every effort to bring the plant into com

30DA AVG	30 Day Average	AVG	The operator is trying very hard to get this p[lant into compliar
30DA AVG	30 Day Average	AVG	The plant operator continues to make every effort to bring the
30DA AVG	30 Day Average	AVG	The plant operator is making every effort to bring the plant int
30DA AVG	30 Day Average	AVG	The TRC exceedance is due to the lack of dechlorination at th
30DA AVG	30 Day Average	AVG	
MX WK AV	Maximum Weekly A	MAX	Airview continues to work with the City of Elizabethtown to tak
MX WK AV	Maximum Weekly A	MAX	Airview continue to make every effort to bring thie utility into c
MX WK AV	Maximum Weekly A	MAX	Airview does continue to operate the plant and try to bring the
MX WK AV	Maximum Weekly A	MAX	Airview Utilities and the operator are trying very hard to bring
MX WK AV	Maximum Weekly A	MAX	Airview Utilities continues to make efforts to bring this treatme
MX WK AV	Maximum Weekly A	MAX	Airview Utilities continues to make every effort to bring the tre
MX WK AV	Maximum Weekly A	MAX	Airview Utilities continues to work with the City of Elizabethtov
MX WK AV	Maximum Weekly A	MAX	Airview Utilities continues to work with the City of Elizabethtov
MX WK AV	Maximum Weekly A	MAX	Airview Utilities is trying on a daily basis to bring the plant into
MX WK AV	Maximum Weekly A	MAX	Airview Utilities is trying very hard to properly operate and ma
MX WK AV	Maximum Weekly A	MAX	CLIENT TO ENTER COMMENTS, SITE INACCESSABLE D
MX WK AV	Maximum Weekly A	MAX	Due to the very wet conditions during the month of March the
MX WK AV	Maximum Weekly A	MAX	Due to very wet, stormy conditions duringthe monitoring perio
MX WK AV	Maximum Weekly A	MAX	During the early days of March the plant was still recovering fr
MX WK AV	Maximum Weekly A	MAX	During the month of August we experienced a lot of problems
MX WK AV	Maximum Weekly A	MAX	During the month of January it was discovered that the overflo
MX WK AV	Maximum Weekly A	MAX	During the month of June there were periods of very heavy ra
MX WK AV	Maximum Weekly A	MAX	Every effort is being made to bring the effluent into compliance
MX WK AV	Maximum Weekly A	MAX	Generally the excursions are due to wet weather and heavy fl
MX WK AV	Maximum Weekly A	MAX	In review of the lab results, the method and location of sample
MX WK AV	Maximum Weekly A	MAX	It appears that Airview Utilities may be getting closer to being
MX WK AV	Maximum Weekly A	MAX	It is very difficult to get this plant into compliance with the extr
MX WK AV	Maximum Weekly A	MAX	It would be greatly appreciated if the Division of Water could a
MX WK AV	Maximum Weekly A	MAX	Midwest just took over this plant and we are working to get in
MX WK AV	Maximum Weekly A	MAX	Note: A request has been made to the DCA and the Louisville
MX WK AV	Maximum Weekly A	MAX	Note that Airview Utilities and the operator are working to brin
MX WK AV	Maximum Weekly A	MAX	Note: That with the authorization of the Louisville regional Offi
MX WK AV	Maximum Weekly A	MAX	Note: This is a very old package plant that really needs to be
MX WK AV	Maximum Weekly A	MAX	Please excuse the latness of submitting this DMR. It was an
MX WK AV	Maximum Weekly A	MAX	Please note that Airview is making every effort to bring the pla
MX WK AV	Maximum Weekly A	MAX	Please note that Airview Utilites is working to bring the treatm
MX WK AV	Maximum Weekly A	MAX	Please note that Airview Utilities continues to make every effo
MX WK AV	Maximum Weekly A	MAX	Please note that Airview Utilities has filed to surrender and ab
MX WK AV	Maximum Weekly A	MAX	Please note that some exceedances of the permit for this faci
MX WK AV	Maximum Weekly A	MAX	Please note that the inaccessible location of the chlorine cont
MX WK AV	Maximum Weekly A	MAX	Please note that the lab entered the data on 7/28/16 instead o
MX WK AV	Maximum Weekly A	MAX	Please note that the operator makes every effort to bring the p
MX WK AV	Maximum Weekly A	MAX	Please note that we have had problems with one of the
MX WK AV	Maximum Weekly A	MAX	Please note that we making some improvements at the plant i
MX WK AV	Maximum Weekly A	MAX	Regardless of the way it may look, Airview Utilities is making e
MX WK AV	Maximum Weekly A	MAX	Test results for this monitoring period is much improved And o
MX WK AV	Maximum Weekly A	MAX	The Airview treatment is very old and outdated. It has exceed
MX WK AV	Maximum Weekly A	MAX	The extremely wet weather and I/I are causing many problems
MX WK AV	Maximum Weekly A	MAX	The extreme winter weather conditions, snow, ice and subzer
MX WK AV	Maximum Weekly A	MAX	The operator is making effort to bring the plant into compliance
MX WK AV	Maximum Weekly A	MAX	The operator is making every effort to bring the plant into com

MX WK AV	Maximum Weekly A	MAX	The operator is trying very hard to get this p[lant into compliar
MX WK AV	Maximum Weekly A	MAX	The plant operator continues to make every effort to bring the
MX WK AV	Maximum Weekly A	MAX	The plant operator is making every effort to bring the plant int
MX WK AV	Maximum Weekly A	MAX	The TRC exceedance is due to the lack of dechlorination at th
MX WK AV	Maximum Weekly A	MAX	
30DA AVG	30 Day Average	AVG	Airview continues to work with the City of Elizabethtown to tak
30DA AVG	30 Day Average	AVG	Airview continue to make every effort to bring thie utility into c
30DA AVG	30 Day Average	AVG	Airview does continue to operate the plant and try to bring the
30DA AVG	30 Day Average	AVG	Airview Utilities and the operator are trying very hard to bring
30DA AVG	30 Day Average	AVG	Airview Utilities continues to make efforts to bring this treatme
30DA AVG	30 Day Average	AVG	Airview Utilities continues to make every effort to bring the tre
30DA AVG	30 Day Average	AVG	Airview Utilities continues to work with the City of Elizabethtov
30DA AVG	30 Day Average	AVG	Airview Utilities continues to work with the City of Elizabethtov
30DA AVG	30 Day Average	AVG	Airview Utilities is trying on a daily basis to bring the plant into
30DA AVG	30 Day Average	AVG	Airview Utilities is trying very hard to properly operate and ma
30DA AVG	30 Day Average	AVG	CLIENT TO ENTER COMMENTS, SITE INACCESSABLE D
30DA AVG	30 Day Average	AVG	Due to the very wet conditions during the month of March the
30DA AVG	30 Day Average	AVG	Due to very wet, stormy conditions duringthe monitoring perio
30DA AVG	30 Day Average	AVG	During the early days of March the plant was still recovering fr
30DA AVG	30 Day Average	AVG	During the month of August we experienced a lot of problems
30DA AVG	30 Day Average	AVG	During the month of January it was discovered that the overflo
30DA AVG	30 Day Average	AVG	During the month of June there were periods of very heavy ra
30DA AVG	30 Day Average	AVG	Every effort is being made to bring the effluent into compliance
30DA AVG	30 Day Average	AVG	Generally the excursions are due to wet weather and heavy fl
30DA AVG	30 Day Average	AVG	In review of the lab results, the method and location of sample
30DA AVG	30 Day Average	AVG	It appears that Airview Utilities may be getting closer to being
30DA AVG	30 Day Average	AVG	It is very difficult to get this plant into compliance with the extr
30DA AVG	30 Day Average	AVG	It would be greatly appreciated if the Division of Water could a
30DA AVG	30 Day Average	AVG	Midwest just took over this plant and we are working to get in
30DA AVG	30 Day Average	AVG	Note: A request has been made to the DCA and the Louisville
30DA AVG	30 Day Average	AVG	Note that Airview Utilities and the operator are working to brin
30DA AVG	30 Day Average	AVG	Note: That with the authorization of the Louisville regional Offi
30DA AVG	30 Day Average	AVG	Note: This is a very old package plant that really needs to be
30DA AVG	30 Day Average	AVG	Please excuse the latness of submitting this DMR. It was an
30DA AVG	30 Day Average	AVG	Please note that Airview is making every effort to bring the pla
30DA AVG	30 Day Average	AVG	Please note that Airview Utilites is working to bring the treatm
30DA AVG	30 Day Average	AVG	Please note that Airview Utilities continues to make every effo
30DA AVG	30 Day Average	AVG	Please note that Airview Utilities has filed to surrender and ab
30DA AVG	30 Day Average	AVG	Please note that some exceedances of the permit for this faci
30DA AVG	30 Day Average	AVG	Please note that the inaccessible location of the chlorine cont
30DA AVG	30 Day Average	AVG	Please note that the lab entered the data on 7/28/16 instead o
30DA AVG	30 Day Average	AVG	Please note that the operator makes every effort to bring the p
30DA AVG	30 Day Average	AVG	Please note that we have had problems with one of the
30DA AVG	30 Day Average	AVG	Please note that we making some improvements at the plant i
30DA AVG	30 Day Average	AVG	Regardless of the way it may look, Airview Utilities is making e
30DA AVG	30 Day Average	AVG	Test results for this monitoring period is much improved And o
30DA AVG	30 Day Average	AVG	The Airview treatment is very old and outdated. It has exceed
30DA AVG	30 Day Average	AVG	The extremely wet weather and I/I are causing many problems
30DA AVG	30 Day Average	AVG	The extreme winter weather conditions, snow, ice and subzer
30DA AVG	30 Day Average	AVG	The operator is making effort to bring the plant into compliance
30DA AVG	30 Day Average	AVG	The operator is making every effort to bring the plant into com

30DA AVG	30 Day Average	AVG	The operator is trying very hard to get this p[lant into compliar
30DA AVG	30 Day Average	AVG	The plant operator continues to make every effort to bring the
30DA AVG	30 Day Average	AVG	The plant operator is making every effort to bring the plant int
30DA AVG	30 Day Average	AVG	The TRC exceedance is due to the lack of dechlorination at th
30DA AVG	30 Day Average	AVG	
MX WK AV	Maximum Weekly A	MAX	Airview continues to work with the City of Elizabethtown to tak
MX WK AV	Maximum Weekly A	MAX	Airview continue to make every effort to bring thie utility into c
MX WK AV	Maximum Weekly A	MAX	Airview does continue to operate the plant and try to bring the
MX WK AV	Maximum Weekly A	MAX	Airview Utilities and the operator are trying very hard to bring
MX WK AV	Maximum Weekly A	MAX	Airview Utilities continues to make efforts to bring this treatme
MX WK AV	Maximum Weekly A	MAX	Airview Utilities continues to make every effort to bring the tre
MX WK AV	Maximum Weekly A	MAX	Airview Utilities continues to work with the City of Elizabethtov
MX WK AV	Maximum Weekly A	MAX	Airview Utilities continues to work with the City of Elizabethtov
MX WK AV	Maximum Weekly A	MAX	Airview Utilities is trying on a daily basis to bring the plant into
MX WK AV	Maximum Weekly A	MAX	Airview Utilities is trying very hard to properly operate and ma
MX WK AV	Maximum Weekly A	MAX	CLIENT TO ENTER COMMENTS, SITE INACCESSABLE D
MX WK AV	Maximum Weekly A	MAX	Due to the very wet conditions during the month of March the
MX WK AV	Maximum Weekly A	MAX	Due to very wet, stormy conditions duringthe monitoring perio
MX WK AV	Maximum Weekly A	MAX	During the early days of March the plant was still recovering fr
MX WK AV	Maximum Weekly A	MAX	During the month of August we experienced a lot of problems
MX WK AV	Maximum Weekly A	MAX	During the month of January it was discovered that the overflo
MX WK AV	Maximum Weekly A	MAX	During the month of June there were periods of very heavy ra
MX WK AV	Maximum Weekly A	MAX	Every effort is being made to bring the effluent into compliance
MX WK AV	Maximum Weekly A	MAX	Generally the excursions are due to wet weather and heavy fl
MX WK AV	Maximum Weekly A	MAX	In review of the lab results, the method and location of sample
MX WK AV	Maximum Weekly A	MAX	It appears that Airview Utilities may be getting closer to being
MX WK AV	Maximum Weekly A	MAX	It is very difficult to get this plant into compliance with the extr
MX WK AV	Maximum Weekly A	MAX	It would be greatly appreciated if the Division of Water could a
MX WK AV	Maximum Weekly A	MAX	Midwest just took over this plant and we are working to get in
MX WK AV	Maximum Weekly A	MAX	Note: A request has been made to the DCA and the Louisville
MX WK AV	Maximum Weekly A	MAX	Note that Airview Utilities and the operator are working to brin
MX WK AV	Maximum Weekly A	MAX	Note: That with the authorization of the Louisville regional Offi
MX WK AV	Maximum Weekly A	MAX	Note: This is a very old package plant that really needs to be
MX WK AV	Maximum Weekly A	MAX	Please excuse the latness of submitting this DMR. It was an
MX WK AV	Maximum Weekly A	MAX	Please note that Airview is making every effort to bring the pla
MX WK AV	Maximum Weekly A	MAX	Please note that Airview Utilites is working to bring the treatm
MX WK AV	Maximum Weekly A	MAX	Please note that Airview Utilities continues to make every effo
MX WK AV	Maximum Weekly A	MAX	Please note that Airview Utilities has filed to surrender and ab
MX WK AV	Maximum Weekly A	MAX	Please note that some exceedances of the permit for this faci
MX WK AV	Maximum Weekly A	MAX	Please note that the inaccessible location of the chlorine cont
MX WK AV	Maximum Weekly A	MAX	Please note that the lab entered the data on 7/28/16 instead o
MX WK AV	Maximum Weekly A	MAX	Please note that the operator makes every effort to bring the p
MX WK AV	Maximum Weekly A	MAX	Please note that we have had problems with one of the
MX WK AV	Maximum Weekly A	MAX	Please note that we making some improvements at the plant i
MX WK AV	Maximum Weekly A	MAX	Regardless of the way it may look, Airview Utilities is making e
MX WK AV	Maximum Weekly A	MAX	Test results for this monitoring period is much improved And o
MX WK AV	Maximum Weekly A	MAX	The Airview treatment is very old and outdated. It has exceed
MX WK AV	Maximum Weekly A	MAX	The extremely wet weather and I/I are causing many problems
MX WK AV	Maximum Weekly A	MAX	The extreme winter weather conditions, snow, ice and subzer
MX WK AV	Maximum Weekly A	MAX	The operator is making effort to bring the plant into compliance
MX WK AV	Maximum Weekly A	MAX	The operator is making every effort to bring the plant into com

MX WK AV	Maximum Weekly A	MAX	The operator is trying very hard to get this p[lant into compliar		
MX WK AV	Maximum Weekly A	MAX	The plant operator continues to make every effort to bring the		
MX WK AV	Maximum Weekly A	MAX	The plant operator is making every effort to bring the plant int		
MX WK AV	Maximum Weekly A	MAX	The TRC exceedance is due to the lack of dechlorination at th		
MX WK AV	Maximum Weekly A	MAX			

Modification Type	Modification Effect	Modification Type	Modification Type

ke over the Airview sewer system and connect it to the City sewers. The attorney for Airview Utilities has even prov
ompliance. Also, Airview Utilities LLC continues to work with the City of Elizabethtown to get the City to assume th
utility into compliance. Airview is also waiting to get the response from the Public Service Commission on its appli
the plant into compliance. Also Airview Utilities has filed with the Public Service Commission to surrender and aba
ent plant into compliance.Again Airview continues to work with the City of Elizabethtown to get them to take over thi
atment plant into compliance.Airview has made application to abandon the sewer utility.Also, Airview continues to v
wn and with Hardin County to work out a transfer arrangement. The ultimate goal is to get the Airview Subdivision c
wn in hopes that the City will take over this facility, connect it to the city sewers and take this plant out of service.
compliance. Also, Airview continues to work with the KY. Public Service Commission to approve the abandonmer
inain this facility. This is an old, outdated plant and the chlorine contact tank is in a location that it can not be reach
uring the early part of July, due to very heavy storms with high winds, a number of trees were blown down blocking
blower had to be off on occasions to settle the plant. Operator is making every effort to keep this plant in complian
d, the operator had to keep the blowers off for periods to retain the solids in the treatment plant. The flow into the p
rom the effects of the extreme winter weather. Sub zero temperature, heavy snow and then heavy rain. Everything
at the treatment plant. The first part of August the plant was recovering from damage caused by vandalism. The a
ow pipe in the lagoon had a leak in it was letting water leak from the bottom of the lagoon(or close to the bottom)to
in and very heavy flow into the plant. The operator is making every effort to bring this plant into compliance but is c
e. Also Airview Utilities continues to pursue getting the City of Elizabethtown to take over this system. It is underst
ows into the plant.Still working to get the City of Elizabethtown to take over the system.
e collection is in questions. Communication with lab to follow. In addition, owners are working with an engineer to c
taken over by the City of Elizabethtown. It is my understanding that the DOW has recently assisted in encouragin
emely wet weather and the I/I this system receives.
assist Airview Utilities in getting one of the Elizabethtown/Hardin County Utilities to take this system over and conne
good working order.
e Regional Office for assistance in bringing this facility into compliance. Also, we continue our efforts to get one of
g the Airview WWTP into compliance. Also, Airview continues to work with the City of Elizabethtown and with Harc
ice the plant secondary effluent is pumped direct to the chlorine contact tank and the tertiary lagoon is bypassed. It
replaced. The best for everybody would be to abandon this plant and connect to a municipal system. Airview has
oversight.Airview continues to work with the City of Elizabethtown to have the City take over this utility.
ant in to compliance but with so many residents not paying their monthly sewer fees Airview has a hard time being a
ent plant into compliance. Airview has had a meeting with George Haynes from DCA to get assistance, suggestior
rt to bring the treatment plant in to compliance.Also, Airview continues to work with the City of Elizabethtown for th
andone this facility. It is very old. It has outlived its useful life. The biggest problem is the old chlorine contact tank
lity occurred due to heavy flow during periods of heavy rain and the sewers becoming charged with rain water. Als
act tank for this plant is the main cause of the permit exceedences. It can not be reached to clean it out. It is unkn
f 6/28/17. Be advised that Airview Utilities is doing everything possible to keep this facility in service and making e
plant in to compliance. But with the very wet weather during the month of February and the I/I issues in the system
blower/motor assemblies at the plant but it has now been repaired. In addition, a complete diffuser drop
in trying to bring this facility into compliance. I met with George Haynes, Division of Compliance Assistance, on Jar
every effort to properly operate and mainain this WWTP. It is an old plant that really should have been taken off lin
operator continue to make improvements.Airview continues to work to encourage the City of E-town to take over thi
ded its usefull life by at least 20 years. The chlorine contact tank that desperately needs to be cleaned is in a locati
s. The operator is doing his best to try and keep the plant in compliance.Airview continues to work with the City of
o temperature had a great deal to do with the exceedances reported for this facilities permit DMR. With frozen pipe
e.Airview Utilities continues to work with the City of Elizabethtown to get the City to assume the responsibility for th
pliance. The plant is very old and needs to be eliminated. Discussions continue between Airview Utilities and the
nce. The main problem is the location of the chlorine contact tank that desperately needs to be cleaned out but bec
effluent into compliance. Also, Airview Utilities continues its efforts to encourage the City of E-town to take control
o compliance. I feel that the ecoli sample was contaminated. Please note that Airview Utilities continues with its qu
his facility. Airview Utilities is currently working with George Haynes (DCA) and Elizabeth Coyle, Coyle & Associate

ke over the Airview sewer system and connect it to the City sewers. The attorney for Airview Utilities has even prov
ompliance. Also, Airview Utilities LLC continues to work with the City of Elizabethtown to get the City to assume th
utility into compliance. Airview is also waiting to get the response from the Public Service Commission on its appli
the plant into compliance. Also Airview Utilities has filed with the Public Service Commission to surrender and aba
ent plant into compliance.Again Airview continues to work with the City of Elizabethtown to get them to take over thi
atment plant into compliance.Airview has made application to abandon the sewer utility.Also, Airview continues to v
wn and with Hardin County to work out a transfer arrangement. The ultimate goal is to get the Airview Subdivision
wn in hopes that the City will take over this facility, connect it to the city sewers and take this plant out of service.
compliance. Also, Airview continues to work with the KY. Public Service Commission to approve the abandonmer
inain this facility. This is an old, outdated plant and the chlorine contact tank is in a location that it can not be reach
uring the early part of July, due to very heavy storms with high winds, a number of trees were blown down blocking
blower had to be off on occasions to settle the plant. Operator is making every effort to keep this plant in complian
d, the operator had to keep the blowers off for periods to retain the solids in the treatment plant. The flow into the p
rom the effects of the extreme winter weather. Sub zero temperature, heavy snow and then heavy rain. Everything
at the treatment plant. The first part of August the plant was recovering from damage caused by vandalism. The
ow pipe in the lagoon had a leak in it was letting water leak from the bottom of the lagoon(or close to the bottom)to
in and very heavy flow into the plant. The operator is making every effort to bring this plant into compliance but is
e. Also Airview Utilities continues to pursue getting the City of Elizabethtown to take over this system. It is underst
ows into the plant.Still working to get the City of Elizabethtown to take over the system.
e collection is in questions. Communication with lab to follow. In addition, owners are working with an engineer to
taken over by the City of Elizabethtown. It is my understanding that the DOW has recently assisted in encouragin
emely wet weather and the I/I this system receives.
assist Airview Utilities in getting one of the Elizabethtown/Hardin County Utilities to take this system over and conne
good working order.
e Regional Office for assistance in bringing this facility into compliance. Also, we continue our efforts to get one of
g the Airview WWTP into compliance. Also, Airview continues to work with the City of Elizabethtown and with Harc
ice the plant secondary effluent is pumped direct to the chlorine contact tank and the tertiary lagoon is bypassed. It
replaced. The best for everybody would be to abandon this plant and connect to a municipal system. Airview has
oversight.Airview continues to work with the City of Elizabethtown to have the City take over this utility.
ant in to compliance but with so many residents not paying their monthly sewer fees Airview has a hard time being a
ent plant into compliance. Airview has had a meeting with George Haynes from DCA to get assistance, suggestior
ort to bring the treatment plant in to compliance.Also, Airview continues to work with the City of Elizabethtown for th
andone this facility. It is very old. It has outlived its useful life. The biggest problem is the old chlorine contact tank
lity occurred due to heavy flow during periods of heavy rain and the sewers becoming charged with rain water. Als
act tank for this plant is the main cause of the permit exceedences. It can not be reached to clean it out. It is unkn
of 6/28/17. Be advised that Airview Utilities is doing everything possible to keep this facility in service and making e
plant in to compliance. But with the very wet weather during the month of February and the I/I issues in the system
blower/motor assemblies at the plant but it has now been repaired. In addition, a complete diffuser drop
in trying to bring this facility into compliance. I met with George Haynes, Division of Compliance Assistance, on Jar
every effort to properly operate and mainain this WWTP. It is an old plant that really should have been taken off lin
operator continue to make improvements.Airview continues to work to encourage the City of E-town to take over thi
ded its usefull life by at least 20 years. The chlorine contact tank that desperately needs to be cleaned is in a locati
s. The operator is doing his best to try and keep the plant in compliance.Airview continues to work with the City of
o temperature had a great deal to do with the exceedances reported for this facilities permit DMR. With frozen pipe
e.Airview Utilities continues to work with the City of Elizabethtown to get the City to assume the responsibility for th
pliance. The plant is very old and needs to be eliminated. Discussions continue between Airview Utilities and the
nce. The main problem is the location of the chlorine contact tank that desperately needs to be cleaned out but bec
effluent into compliance. Also, Airview Utilities continues its efforts to encourage the City of E-town to take control
o compliance. I feel that the ecoli sample was contaminated. Please note that Airview Utilities continues with its qu
his facility. Airview Utilities is currently working with George Haynes (DCA) and Elizabeth Coyle, Coyle & Associate

ke over the Airview sewer system and connect it to the City sewers. The attorney for Airview Utilities has even prov
ompliance. Also, Airview Utilities LLC continues to work with the City of Elizabethtown to get the City to assume th
utility into compliance. Airview is also waiting to get the response from the Public Service Commission on its appli
the plant into compliance. Also Airview Utilities has filed with the Public Service Commission to surrender and aba
ent plant into compliance.Again Airview continues to work with the City of Elizabethtown to get them to take over thi
atment plant into compliance.Airview has made application to abandon the sewer utility.Also, Airview continues to v
vn and with Hardin County to work out a transfer arrangement. The ultimate goal is to get the Airview Subdivision
vn in hopes that the City will take over this facility, connect it to the city sewers and take this plant out of service.
compliance. Also, Airview continues to work with the KY. Public Service Commission to approve the abandonmer
inain this facility. This is an old, outdated plant and the chlorine contact tank is in a location that it can not be reach
uring the early part of July, due to very heavy storms with high winds, a number of trees were blown down blocking
blower had to be off on occasions to settle the plant. Operator is making every effort to keep this plant in complian
d, the operator had to keep the blowers off for periods to retain the solids in the treatment plant. The flow into the p
rom the effects of the extreme winter weather. Sub zero temperature, heavy snow and then heavy rain. Everything
at the treatment plant. The first part of August the plant was recovering from damage caused by vandalism. The
ow pipe in the lagoon had a leak in it was letting water leak from the bottom of the lagoon(or close to the bottom)to
in and very heavy flow into the plant. The operator is making every effort to bring this plant into compliance but is
e. Also Airview Utilities continues to pursue getting the City of Elizabethtown to take over this system. It is underst
ows into the plant.Still working to get the City of Elizabethtown to take over the system.
e collection is in questions. Communication with lab to follow. In addition, owners are working with an engineer to
taken over by the City of Elizabethtown. It is my understanding that the DOW has recently assisted in encouragin
emely wet weather and the I/I this system receives.
assist Airview Utilities in getting one of the Elizabethtown/Hardin County Utilities to take this system over and conne
good working order.
e Regional Office for assistance in bringing this facility into compliance. Also, we continue our efforts to get one of
g the Airview WWTP into compliance. Also, Airview continues to work with the City of Elizabethtown and with Hard
ice the plant secondary effluent is pumped direct to the chlorine contact tank and the tertiary lagoon is bypassed. It
replaced. The best for everybody would be to abandon this plant and connect to a municipal system. Airview has
oversight.Airview continues to work with the City of Elizabethtown to have the City take over this utility.
ant in to compliance but with so many residents not paying their monthly sewer fees Airview has a hard time being a
ent plant into compliance. Airview has had a meeting with George Haynes from DCA to get assistance, suggestion
rt to bring the treatment plant in to compliance.Also, Airview continues to work with the City of Elizabethtown for th
andone this facility. It is very old. It has outlived its useful life. The biggest problem is the old chlorine contact tank
lity occurred due to heavy flow during periods of heavy rain and the sewers becoming charged with rain water. Als
act tank for this plant is the main cause of the permit exceedences. It can not be reached to clean it out. It is unkn
f 6/28/17. Be advised that Airview Utilities is doing everything possible to keep this facility in service and making e
plant in to compliance. But with the very wet weather during the month of February and the I/I issues in the system
blower/motor assemblies at the plant but it has now been repaired. In addition, a complete diffuser drop
in trying to bring this facility into compliance. I met with George Haynes, Division of Compliance Assistance, on Jan
every effort to properly operate and mainain this WWTP. It is an old plant that really should have been taken off lin
operator continue to make improvements.Airview continues to work to encourage the City of E-town to take over thi
ded its usefull life by at least 20 years. The chlorine contact tank that desperately needs to be cleaned is in a locati
s. The operator is doing his best to try and keep the plant in compliance.Airview continues to work with the City of
o temperature had a great deal to do with the exceedances reported for this facilities permit DMR. With frozen pipe
e.Airview Utilities continues to work with the City of Elizabethtown to get the City to assume the responsibility for th
pliance. The plant is very old and needs to be eliminated. Discussions continue between Airview Utilities and the
nce. The main problem is the location of the chlorine contact tank that desperately needs to be cleaned out but bec
effluent into compliance. Also, Airview Utilities continues its efforts to encourage the City of E-town to take control
o compliance. I feel that the ecoli sample was contaminated. Please note that Airview Utilities continues with its qu
his facility. Airview Utilities is currently working with George Haynes (DCA) and Elizabeth Coyle, Coyle & Associate

ke over the Airview sewer system and connect it to the City sewers. The attorney for Airview Utilities has even prov
ompliance. Also, Airview Utilities LLC continues to work with the City of Elizabethtown to get the City to assume th
utility into compliance. Airview is also waiting to get the response from the Public Service Commission on its appli
the plant into compliance. Also Airview Utilities has filed with the Public Service Commission to surrender and aba
ent plant into compliance.Again Airview continues to work with the City of Elizabethtown to get them to take over thi
atment plant into compliance.Airview has made application to abandon the sewer utility.Also, Airview continues to v
wn and with Hardin County to work out a transfer arrangement. The ultimate goal is to get the Airview Subdivision
wn in hopes that the City will take over this facility, connect it to the city sewers and take this plant out of service.
compliance. Also, Airview continues to work with the KY. Public Service Commission to approve the abandonmer
inain this facility. This is an old, outdated plant and the chlorine contact tank is in a location that it can not be reach
uring the early part of July, due to very heavy storms with high winds, a number of trees were blown down blocking
blower had to be off on occasions to settle the plant. Operator is making every effort to keep this plant in complian
d, the operator had to keep the blowers off for periods to retain the solids in the treatment plant. The flow into the p
rom the effects of the extreme winter weather. Sub zero temperature, heavy snow and then heavy rain. Everything
at the treatment plant. The first part of August the plant was recovering from damage caused by vandalism. The
ow pipe in the lagoon had a leak in it was letting water leak from the bottom of the lagoon(or close to the bottom)to
in and very heavy flow into the plant. The operator is making every effort to bring this plant into compliance but is
e. Also Airview Utilities continues to pursue getting the City of Elizabethtown to take over this system. It is underst
ows into the plant.Still working to get the City of Elizabethtown to take over the system.
e collection is in questions. Communication with lab to follow. In addition, owners are working with an engineer to
taken over by the City of Elizabethtown. It is my understanding that the DOW has recently assisted in encouragin
emely wet weather and the I/I this system receives.
assist Airview Utilities in getting one of the Elizabethtown/Hardin County Utilities to take this system over and conne
good working order.
e Regional Office for assistance in bringing this facility into compliance. Also, we continue our efforts to get one of
g the Airview WWTP into compliance. Also, Airview continues to work with the City of Elizabethtown and with Harc
ice the plant secondary effluent is pumped direct to the chlorine contact tank and the tertiary lagoon is bypassed. It
replaced. The best for everybody would be to abandon this plant and connect to a municipal system. Airview has
oversight.Airview continues to work with the City of Elizabethtown to have the City take over this utility.
ant in to compliance but with so many residents not paying their monthly sewer fees Airview has a hard time being a
ent plant into compliance. Airview has had a meeting with George Haynes from DCA to get assistance, suggestior
ort to bring the treatment plant in to compliance.Also, Airview continues to work with the City of Elizabethtown for th
andone this facility. It is very old. It has outlived its useful life. The biggest problem is the old chlorine contact tank
lity occurred due to heavy flow during periods of heavy rain and the sewers becoming charged with rain water. Als
act tank for this plant is the main cause of the permit exceedences. It can not be reached to clean it out. It is unkn
of 6/28/17. Be advised that Airview Utilities is doing everything possible to keep this facility in service and making e
plant in to compliance. But with the very wet weather during the month of February and the I/I issues in the system
blower/motor assemblies at the plant but it has now been repaired. In addition, a complete diffuser drop
in trying to bring this facility into compliance. I met with George Haynes, Division of Compliance Assistance, on Jar
every effort to properly operate and mainain this WWTP. It is an old plant that really should have been taken off lin
operator continue to make improvements.Airview continues to work to encourage the City of E-town to take over thi
ded its usefull life by at least 20 years. The chlorine contact tank that desperately needs to be cleaned is in a locati
s. The operator is doing his best to try and keep the plant in compliance.Airview continues to work with the City of
o temperature had a great deal to do with the exceedances reported for this facilities permit DMR. With frozen pipe
e.Airview Utilities continues to work with the City of Elizabethtown to get the City to assume the responsibility for th
pliance. The plant is very old and needs to be eliminated. Discussions continue between Airview Utilities and the
nce. The main problem is the location of the chlorine contact tank that desperately needs to be cleaned out but bec
effluent into compliance. Also, Airview Utilities continues its efforts to encourage the City of E-town to take control
o compliance. I feel that the ecoli sample was contaminated. Please note that Airview Utilities continues with its qu
his facility. Airview Utilities is currently working with George Haynes (DCA) and Elizabeth Coyle, Coyle & Associate

ke over the Airview sewer system and connect it to the City sewers. The attorney for Airview Utilities has even prov
ompliance. Also, Airview Utilities LLC continues to work with the City of Elizabethtown to get the City to assume th
utility into compliance. Airview is also waiting to get the response from the Public Service Commission on its appli
the plant into compliance. Also Airview Utilities has filed with the Public Service Commission to surrender and aba
ent plant into compliance.Again Airview continues to work with the City of Elizabethtown to get them to take over thi
atment plant into compliance.Airview has made application to abandon the sewer utility.Also, Airview continues to v
vn and with Hardin County to work out a transfer arrangement. The ultimate goal is to get the Airview Subdivision
vn in hopes that the City will take over this facility, connect it to the city sewers and take this plant out of service.
compliance. Also, Airview continues to work with the KY. Public Service Commission to approve the abandonmer
inain this facility. This is an old, outdated plant and the chlorine contact tank is in a location that it can not be reach
uring the early part of July, due to very heavy storms with high winds, a number of trees were blown down blocking
blower had to be off on occasions to settle the plant. Operator is making every effort to keep this plant in complian
d, the operator had to keep the blowers off for periods to retain the solids in the treatment plant. The flow into the p
rom the effects of the extreme winter weather. Sub zero temperature, heavy snow and then heavy rain. Everything
at the treatment plant. The first part of August the plant was recovering from damage caused by vandalism. The
ow pipe in the lagoon had a leak in it was letting water leak from the bottom of the lagoon(or close to the bottom)to
in and very heavy flow into the plant. The operator is making every effort to bring this plant into compliance but is
e. Also Airview Utilities continues to pursue getting the City of Elizabethtown to take over this system. It is underst
ows into the plant.Still working to get the City of Elizabethtown to take over the system.
e collection is in questions. Communication with lab to follow. In addition, owners are working with an engineer to
taken over by the City of Elizabethtown. It is my understanding that the DOW has recently assisted in encouragin
emely wet weather and the I/I this system receives.
assist Airview Utilities in getting one of the Elizabethtown/Hardin County Utilities to take this system over and conne
good working order.
e Regional Office for assistance in bringing this facility into compliance. Also, we continue our efforts to get one of
g the Airview WWTP into compliance. Also, Airview continues to work with the City of Elizabethtown and with Hard
ice the plant secondary effluent is pumped direct to the chlorine contact tank and the tertiary lagoon is bypassed. It
replaced. The best for everybody would be to abandon this plant and connect to a municipal system. Airview has
oversight.Airview continues to work with the City of Elizabethtown to have the City take over this utility.
ant in to compliance but with so many residents not paying their monthly sewer fees Airview has a hard time being a
ent plant into compliance. Airview has had a meeting with George Haynes from DCA to get assistance, suggestion
rt to bring the treatment plant in to compliance.Also, Airview continues to work with the City of Elizabethtown for th
andone this facility. It is very old. It has outlived its useful life. The biggest problem is the old chlorine contact tank
lity occurred due to heavy flow during periods of heavy rain and the sewers becoming charged with rain water. Als
act tank for this plant is the main cause of the permit exceedences. It can not be reached to clean it out. It is unkn
f 6/28/17. Be advised that Airview Utilities is doing everything possible to keep this facility in service and making e
plant in to compliance. But with the very wet weather during the month of February and the I/I issues in the system
blower/motor assemblies at the plant but it has now been repaired. In addition, a complete diffuser drop
in trying to bring this facility into compliance. I met with George Haynes, Division of Compliance Assistance, on Jan
every effort to properly operate and mainain this WWTP. It is an old plant that really should have been taken off lin
operator continue to make improvements.Airview continues to work to encourage the City of E-town to take over thi
ded its usefull life by at least 20 years. The chlorine contact tank that desperately needs to be cleaned is in a locati
s. The operator is doing his best to try and keep the plant in compliance.Airview continues to work with the City of
o temperature had a great deal to do with the exceedances reported for this facilities permit DMR. With frozen pipe
e.Airview Utilities continues to work with the City of Elizabethtown to get the City to assume the responsibility for th
pliance. The plant is very old and needs to be eliminated. Discussions continue between Airview Utilities and the
nce. The main problem is the location of the chlorine contact tank that desperately needs to be cleaned out but bec
effluent into compliance. Also, Airview Utilities continues its efforts to encourage the City of E-town to take control
o compliance. I feel that the ecoli sample was contaminated. Please note that Airview Utilities continues with its qu
his facility. Airview Utilities is currently working with George Haynes (DCA) and Elizabeth Coyle, Coyle & Associate

ke over the Airview sewer system and connect it to the City sewers. The attorney for Airview Utilities has even prov
ompliance. Also, Airview Utilities LLC continues to work with the City of Elizabethtown to get the City to assume th
utility into compliance. Airview is also waiting to get the response from the Public Service Commission on its appli
the plant into compliance. Also Airview Utilities has filed with the Public Service Commission to surrender and aba
ent plant into compliance.Again Airview continues to work with the City of Elizabethtown to get them to take over thi
atment plant into compliance.Airview has made application to abandon the sewer utility.Also, Airview continues to v
wn and with Hardin County to work out a transfer arrangement. The ultimate goal is to get the Airview Subdivision
wn in hopes that the City will take over this facility, connect it to the city sewers and take this plant out of service.
compliance. Also, Airview continues to work with the KY. Public Service Commission to approve the abandonmer
inain this facility. This is an old, outdated plant and the chlorine contact tank is in a location that it can not be reach
uring the early part of July, due to very heavy storms with high winds, a number of trees were blown down blocking
blower had to be off on occasions to settle the plant. Operator is making every effort to keep this plant in complian
d, the operator had to keep the blowers off for periods to retain the solids in the treatment plant. The flow into the p
rom the effects of the extreme winter weather. Sub zero temperature, heavy snow and then heavy rain. Everything
at the treatment plant. The first part of August the plant was recovering from damage caused by vandalism. The
ow pipe in the lagoon had a leak in it was letting water leak from the bottom of the lagoon(or close to the bottom)to
in and very heavy flow into the plant. The operator is making every effort to bring this plant into compliance but is
e. Also Airview Utilities continues to pursue getting the City of Elizabethtown to take over this system. It is underst
ows into the plant.Still working to get the City of Elizabethtown to take over the system.
e collection is in questions. Communication with lab to follow. In addition, owners are working with an engineer to
taken over by the City of Elizabethtown. It is my understanding that the DOW has recently assisted in encouragin
emely wet weather and the I/I this system receives.
assist Airview Utilities in getting one of the Elizabethtown/Hardin County Utilities to take this system over and conne
good working order.
e Regional Office for assistance in bringing this facility into compliance. Also, we continue our efforts to get one of
g the Airview WWTP into compliance. Also, Airview continues to work with the City of Elizabethtown and with Harc
ice the plant secondary effluent is pumped direct to the chlorine contact tank and the tertiary lagoon is bypassed. It
replaced. The best for everybody would be to abandon this plant and connect to a municipal system. Airview has
oversight.Airview continues to work with the City of Elizabethtown to have the City take over this utility.
ant in to compliance but with so many residents not paying their monthly sewer fees Airview has a hard time being a
ent plant into compliance. Airview has had a meeting with George Haynes from DCA to get assistance, suggestior
ort to bring the treatment plant in to compliance.Also, Airview continues to work with the City of Elizabethtown for th
andone this facility. It is very old. It has outlived its useful life. The biggest problem is the old chlorine contact tank
lity occurred due to heavy flow during periods of heavy rain and the sewers becoming charged with rain water. Als
act tank for this plant is the main cause of the permit exceedences. It can not be reached to clean it out. It is unkn
of 6/28/17. Be advised that Airview Utilities is doing everything possible to keep this facility in service and making e
plant in to compliance. But with the very wet weather during the month of February and the I/I issues in the system
blower/motor assemblies at the plant but it has now been repaired. In addition, a complete diffuser drop
in trying to bring this facility into compliance. I met with George Haynes, Division of Compliance Assistance, on Jar
every effort to properly operate and mainain this WWTP. It is an old plant that really should have been taken off lin
operator continue to make improvements.Airview continues to work to encourage the City of E-town to take over thi
ded its usefull life by at least 20 years. The chlorine contact tank that desperately needs to be cleaned is in a locati
s. The operator is doing his best to try and keep the plant in compliance.Airview continues to work with the City of
o temperature had a great deal to do with the exceedances reported for this facilities permit DMR. With frozen pipe
e.Airview Utilities continues to work with the City of Elizabethtown to get the City to assume the responsibility for th
pliance. The plant is very old and needs to be eliminated. Discussions continue between Airview Utilities and the
nce. The main problem is the location of the chlorine contact tank that desperately needs to be cleaned out but bec
effluent into compliance. Also, Airview Utilities continues its efforts to encourage the City of E-town to take control
o compliance. I feel that the ecoli sample was contaminated. Please note that Airview Utilities continues with its qu
his facility. Airview Utilities is currently working with George Haynes (DCA) and Elizabeth Coyle, Coyle & Associate

ke over the Airview sewer system and connect it to the City sewers. The attorney for Airview Utilities has even prov
ompliance. Also, Airview Utilities LLC continues to work with the City of Elizabethtown to get the City to assume th
utility into compliance. Airview is also waiting to get the response from the Public Service Commission on its appli
the plant into compliance. Also Airview Utilities has filed with the Public Service Commission to surrender and aba
ent plant into compliance.Again Airview continues to work with the City of Elizabethtown to get them to take over thi
atment plant into compliance.Airview has made application to abandon the sewer utility.Also, Airview continues to v
vn and with Hardin County to work out a transfer arrangement. The ultimate goal is to get the Airview Subdivision
vn in hopes that the City will take over this facility, connect it to the city sewers and take this plant out of service.
compliance. Also, Airview continues to work with the KY. Public Service Commission to approve the abandonmer
inain this facility. This is an old, outdated plant and the chlorine contact tank is in a location that it can not be reach
uring the early part of July, due to very heavy storms with high winds, a number of trees were blown down blocking
blower had to be off on occasions to settle the plant. Operator is making every effort to keep this plant in complian
d, the operator had to keep the blowers off for periods to retain the solids in the treatment plant. The flow into the p
rom the effects of the extreme winter weather. Sub zero temperature, heavy snow and then heavy rain. Everything
at the treatment plant. The first part of August the plant was recovering from damage caused by vandalism. The
ow pipe in the lagoon had a leak in it was letting water leak from the bottom of the lagoon(or close to the bottom)to
in and very heavy flow into the plant. The operator is making every effort to bring this plant into compliance but is
e. Also Airview Utilities continues to pursue getting the City of Elizabethtown to take over this system. It is underst
ows into the plant.Still working to get the City of Elizabethtown to take over the system.
e collection is in questions. Communication with lab to follow. In addition, owners are working with an engineer to
taken over by the City of Elizabethtown. It is my understanding that the DOW has recently assisted in encouragin
emely wet weather and the I/I this system receives.
assist Airview Utilities in getting one of the Elizabethtown/Hardin County Utilities to take this system over and conne
good working order.
e Regional Office for assistance in bringing this facility into compliance. Also, we continue our efforts to get one of
g the Airview WWTP into compliance. Also, Airview continues to work with the City of Elizabethtown and with Hard
ice the plant secondary effluent is pumped direct to the chlorine contact tank and the tertiary lagoon is bypassed. It
replaced. The best for everybody would be to abandon this plant and connect to a municipal system. Airview has
oversight.Airview continues to work with the City of Elizabethtown to have the City take over this utility.
ant in to compliance but with so many residents not paying their monthly sewer fees Airview has a hard time being a
ent plant into compliance. Airview has had a meeting with George Haynes from DCA to get assistance, suggestion
rt to bring the treatment plant in to compliance.Also, Airview continues to work with the City of Elizabethtown for th
andone this facility. It is very old. It has outlived its useful life. The biggest problem is the old chlorine contact tank
lity occurred due to heavy flow during periods of heavy rain and the sewers becoming charged with rain water. Als
act tank for this plant is the main cause of the permit exceedences. It can not be reached to clean it out. It is unkn
f 6/28/17. Be advised that Airview Utilities is doing everything possible to keep this facility in service and making e
plant in to compliance. But with the very wet weather during the month of February and the I/I issues in the system
blower/motor assemblies at the plant but it has now been repaired. In addition, a complete diffuser drop
in trying to bring this facility into compliance. I met with George Haynes, Division of Compliance Assistance, on Jan
every effort to properly operate and mainain this WWTP. It is an old plant that really should have been taken off lin
operator continue to make improvements.Airview continues to work to encourage the City of E-town to take over thi
ded its usefull life by at least 20 years. The chlorine contact tank that desperately needs to be cleaned is in a locati
s. The operator is doing his best to try and keep the plant in compliance.Airview continues to work with the City of
o temperature had a great deal to do with the exceedances reported for this facilities permit DMR. With frozen pipe
e.Airview Utilities continues to work with the City of Elizabethtown to get the City to assume the responsibility for th
pliance. The plant is very old and needs to be eliminated. Discussions continue between Airview Utilities and the
nce. The main problem is the location of the chlorine contact tank that desperately needs to be cleaned out but bec
effluent into compliance. Also, Airview Utilities continues its efforts to encourage the City of E-town to take control
o compliance. I feel that the ecoli sample was contaminated. Please note that Airview Utilities continues with its qu
his facility. Airview Utilities is currently working with George Haynes (DCA) and Elizabeth Coyle, Coyle & Associate

ompliance. Also, Airview Utilities LLC continues to work with the City of Elizabethtown to get the City to assume th
ent plant into compliance.Again Airview continues to work with the City of Elizabethtown to get them to take over thi
wn and with Hardin County to work out a transfer arrangement. The ultimate goal is to get the Airview Subdivision
compliance. Also, Airview continues to work with the KY. Public Service Commission to approve the abandonmer
uring the early part of July, due to very heavy storms with high winds, a number of trees were blown down blocking
d, the operator had to keep the blowers off for periods to retain the solids in the treatment plant. The flow into the
at the treatment plant. The first part of August the plant was recovering from damage caused by vandalism. The
in and very heavy flow into the plant. The operator is making every effort to bring this plant into compliance but is
e. Also Airview Utilities continues to pursue getting the City of Elizabethtown to take over this system. It is underst
e collection is in questions. Communication with lab to follow. In addition, owners are working with an engineer to
good working order.

g the Airview WWTP into compliance. Also, Airview continues to work with the City of Elizabethtown and with Harc
replaced. The best for everybody would be to abandon this plant and connect to a municipal system. Airview has
rt to bring the treatment plant in to compliance.Also, Airview continues to work with the City of Elizabethtown for th
andone this facility. It is very old. It has outlived its useful life. The biggest problem is the old chlorine contact tank
lity occurred due to heavy flow during periods of heavy rain and the sewers becoming charged with rain water. Als
act tank for this plant is the main cause of the permit exceedences. It can not be reached to clean it out. It is unkn
f 6/28/17. Be advised that Airview Utilities is doing everything possible to keep this facility in service and making e
blower/motor assemblies at the plant but it has now been repaired. In addition, a complete diffuser drop
every effort to properly operate and mainain this WWTP. It is an old plant that really should have been taken off lin
operator continue to make improvements.Airview continues to work to encourage the City of E-town to take over thi
ded its usefull life by at least 20 years. The chlorine contact tank that desperately needs to be cleaned is in a locati
e.Airview Utilities continues to work with the City of Elizabethtown to get the City to assume the responsibility for th
nce. The main problem is the location of the chlorine contact tank that desperately needs to be cleaned out but bec
effluent into compliance. Also, Airview Utilities continues its efforts to encourage the City of E-town to take control

ompliance. Also, Airview Utilities LLC continues to work with the City of Elizabethtown to get the City to assume th
ent plant into compliance.Again Airview continues to work with the City of Elizabethtown to get them to take over thi
wn and with Hardin County to work out a transfer arrangement. The ultimate goal is to get the Airview Subdivision
compliance. Also, Airview continues to work with the KY. Public Service Commission to approve the abandonmer
uring the early part of July, due to very heavy storms with high winds, a number of trees were blown down blocking
d, the operator had to keep the blowers off for periods to retain the solids in the treatment plant. The flow into the
at the treatment plant. The first part of August the plant was recovering from damage caused by vandalism. The
in and very heavy flow into the plant. The operator is making every effort to bring this plant into compliance but is
e. Also Airview Utilities continues to pursue getting the City of Elizabethtown to take over this system. It is underst
e collection is in questions. Communication with lab to follow. In addition, owners are working with an engineer to
good working order.

g the Airview WWTP into compliance. Also, Airview continues to work with the City of Elizabethtown and with Harc
replaced. The best for everybody would be to abandon this plant and connect to a municipal system. Airview has
rt to bring the treatment plant in to compliance.Also, Airview continues to work with the City of Elizabethtown for th
andone this facility. It is very old. It has outlived its useful life. The biggest problem is the old chlorine contact tank
lity occurred due to heavy flow during periods of heavy rain and the sewers becoming charged with rain water. Als
act tank for this plant is the main cause of the permit exceedences. It can not be reached to clean it out. It is unkn
f 6/28/17. Be advised that Airview Utilities is doing everything possible to keep this facility in service and making e
blower/motor assemblies at the plant but it has now been repaired. In addition, a complete diffuser drop
every effort to properly operate and mainain this WWTP. It is an old plant that really should have been taken off lin
operator continue to make improvements.Airview continues to work to encourage the City of E-town to take over thi
ded its usefull life by at least 20 years. The chlorine contact tank that desperately needs to be cleaned is in a locati
e.Airview Utilities continues to work with the City of Elizabethtown to get the City to assume the responsibility for th
nce. The main problem is the location of the chlorine contact tank that desperately needs to be cleaned out but bec

effluent into compliance. Also, Airview Utilities continues its efforts to encourage the City of E-town to take control

ompliance. Also, Airview Utilities LLC continues to work with the City of Elizabethtown to get the City to assume th
ent plant into compliance.Again Airview continues to work with the City of Elizabethtown to get them to take over thi
wn and with Hardin County to work out a transfer arrangement. The ultimate goal is to get the Airview Subdivision c
compliance. Also, Airview continues to work with the KY. Public Service Commission to approve the abandonmer
uring the early part of July, due to very heavy storms with high winds, a number of trees were blown down blocking
d, the operator had to keep the blowers off for periods to retain the solids in the treatment plant. The flow into the p
at the treatment plant. The first part of August the plant was recovering from damage caused by vandalism. The a
in and very heavy flow into the plant. The operator is making every effort to bring this plant into compliance but is c
e. Also Airview Utilities continues to pursue getting the City of Elizabethtown to take over this system. It is underst
e collection is in questions. Communication with lab to follow. In addition, owners are working with an engineer to c
good working order.
g the Airview WWTP into compliance. Also, Airview continues to work with the City of Elizabethtown and with Harc
replaced. The best for everybody would be to abandon this plant and connect to a municipal system. Airview has
rt to bring the treatment plant in to compliance.Also, Airview continues to work with the City of Elizabethtown for th
andone this facility. It is very old. It has outlived its useful life. The biggest problem is the old chlorine contact tank
lity occurred due to heavy flow during periods of heavy rain and the sewers becoming charged with rain water. Als
act tank for this plant is the main cause of the permit exceedences. It can not be reached to clean it out. It is unkn
f 6/28/17. Be advised that Airview Utilities is doing everything possible to keep this facility in service and making e
blower/motor assemblies at the plant but it has now been repaired. In addition, a complete diffuser drop
every effort to properly operate and mainain this WWTP. It is an old plant that really should have been taken off lin
perator continue to make improvements.Airview continues to work to encourage the City of E-town to take over thi
ded its usefull life by at least 20 years. The chlorine contact tank that desperately needs to be cleaned is in a locati
e.Airview Utilities continues to work with the City of Elizabethtown to get the City to assume the responsibility for th
nce. The main problem is the location of the chlorine contact tank that desperately needs to be cleaned out but bec
effluent into compliance. Also, Airview Utilities continues its efforts to encourage the City of E-town to take control

ompliance. Also, Airview Utilities LLC continues to work with the City of Elizabethtown to get the City to assume th
ent plant into compliance.Again Airview continues to work with the City of Elizabethtown to get them to take over thi
wn and with Hardin County to work out a transfer arrangement. The ultimate goal is to get the Airview Subdivision c
compliance. Also, Airview continues to work with the KY. Public Service Commission to approve the abandonmer
uring the early part of July, due to very heavy storms with high winds, a number of trees were blown down blocking
d, the operator had to keep the blowers off for periods to retain the solids in the treatment plant. The flow into the p
at the treatment plant. The first part of August the plant was recovering from damage caused by vandalism. The a
in and very heavy flow into the plant. The operator is making every effort to bring this plant into compliance but is c
e. Also Airview Utilities continues to pursue getting the City of Elizabethtown to take over this system. It is underst
e collection is in questions. Communication with lab to follow. In addition, owners are working with an engineer to c
good working order.
g the Airview WWTP into compliance. Also, Airview continues to work with the City of Elizabethtown and with Harc
replaced. The best for everybody would be to abandon this plant and connect to a municipal system. Airview has
rt to bring the treatment plant in to compliance.Also, Airview continues to work with the City of Elizabethtown for th
andone this facility. It is very old. It has outlived its useful life. The biggest problem is the old chlorine contact tank
lity occurred due to heavy flow during periods of heavy rain and the sewers becoming charged with rain water. Als
act tank for this plant is the main cause of the permit exceedences. It can not be reached to clean it out. It is unkn
f 6/28/17. Be advised that Airview Utilities is doing everything possible to keep this facility in service and making e
blower/motor assemblies at the plant but it has now been repaired. In addition, a complete diffuser drop
every effort to properly operate and mainain this WWTP. It is an old plant that really should have been taken off lin
perator continue to make improvements.Airview continues to work to encourage the City of E-town to take over thi
ded its usefull life by at least 20 years. The chlorine contact tank that desperately needs to be cleaned is in a locati
e.Airview Utilities continues to work with the City of Elizabethtown to get the City to assume the responsibility for th

nce. The main problem is the location of the chlorine contact tank that desperately needs to be cleaned out but bec
effluent into compliance. Also, Airview Utilities continues its efforts to encourage the City of E-town to take control

e over the Airview sewer system and connect it to the City sewers. The attorney for Airview Utilities has even prov
utility into compliance. Airview is also waiting to get the response from the Public Service Commission on its appli
the plant into compliance. Also Airview Utilities has filed with the Public Service Commission to surrender and aba
atment plant into compliance.Airview has made application to abandon the sewer utility.Also, Airview continues to v
wn in hopes that the City will take over this facility, connect it to the city sewers and take this plant out of service.
inain this facility. This is an old, outdated plant and the chlorine contact tank is in a location that it can not be reach
blower had to be off on occasions to settle the plant. Operator is making every effort to keep this plant in complian
rom the effects of the extreme winter weather. Sub zero temperature, heavy snow and then heavy rain. Everything
ow pipe in the lagoon had a leak in it was letting water leak from the bottom of the lagoon(or close to the bottom)to
ows into the plant.Still working to get the City of Elizabethtown to take over the system.
taken over by the City of Elizabethtown. It is my understanding that the DOW has recently assisted in encouraging
emely wet weather and the I/I this system receives.
assist Airview Utilities in getting one of the Elizabethtown/Hardin County Utilities to take this system over and conne
e Regional Office for assistance in bringing this facility into compliance. Also, we continue our efforts to get one of
ice the plant secondary effluent is pumped direct to the chlorine contact tank and the tertiary lagoon is bypassed. It
oversight.Airview continues to work with the City of Elizabethtown to have the City take over this utility.
ant in to compliance but with so many residents not paying their monthly sewer fees Airview has a hard time being a
ent plant into compliance. Airview has had a meeting with George Haynes from DCA to get assistance, suggestion
plant in to compliance. But with the very wet weather during the month of February and the I/I issues in the system
in trying to bring this facility into compliance. I met with George Haynes, Division of Compliance Assistance, on Jan
s. The operator is doing his best to try and keep the plant in compliance.Airview continues to work with the City of
o temperature had a great deal to do with the exceedances reported for this facilities permit DMR. With frozen pipe
pliance. The plant is very old and needs to be eliminated. Discussions continue between Airview Utilities and the
o compliance. I feel that the ecoli sample was contaminated. Please note that Airview Utilities continues with its qu
his facility. Airview Utilities is currently working with George Haynes (DCA) and Elizabeth Coyle, Coyle & Associate

e over the Airview sewer system and connect it to the City sewers. The attorney for Airview Utilities has even prov
utility into compliance. Airview is also waiting to get the response from the Public Service Commission on its appli
the plant into compliance. Also Airview Utilities has filed with the Public Service Commission to surrender and aba
atment plant into compliance.Airview has made application to abandon the sewer utility.Also, Airview continues to v
wn in hopes that the City will take over this facility, connect it to the city sewers and take this plant out of service.
inain this facility. This is an old, outdated plant and the chlorine contact tank is in a location that it can not be reach
blower had to be off on occasions to settle the plant. Operator is making every effort to keep this plant in complian
rom the effects of the extreme winter weather. Sub zero temperature, heavy snow and then heavy rain. Everything
ow pipe in the lagoon had a leak in it was letting water leak from the bottom of the lagoon(or close to the bottom)to
ows into the plant.Still working to get the City of Elizabethtown to take over the system.
taken over by the City of Elizabethtown. It is my understanding that the DOW has recently assisted in encouraging
emely wet weather and the I/I this system receives.
assist Airview Utilities in getting one of the Elizabethtown/Hardin County Utilities to take this system over and conne
e Regional Office for assistance in bringing this facility into compliance. Also, we continue our efforts to get one of
ice the plant secondary effluent is pumped direct to the chlorine contact tank and the tertiary lagoon is bypassed. It
oversight.Airview continues to work with the City of Elizabethtown to have the City take over this utility.
ant in to compliance but with so many residents not paying their monthly sewer fees Airview has a hard time being a
ent plant into compliance. Airview has had a meeting with George Haynes from DCA to get assistance, suggestion
plant in to compliance. But with the very wet weather during the month of February and the I/I issues in the system
in trying to bring this facility into compliance. I met with George Haynes, Division of Compliance Assistance, on Jan
s. The operator is doing his best to try and keep the plant in compliance.Airview continues to work with the City of
o temperature had a great deal to do with the exceedances reported for this facilities permit DMR. With frozen pipe

ıpliance. The plant is very old and needs to be eliminated. Discussions continue between Airview Utilities and the
o compliance. I feel that the ecoli sample was contaminated. Please note that Airview Utilities continues with its qu
his facility. Airview Utilities is currently working with George Haynes (DCA) and Elizabeth Coyle, Coyle & Associate

ke over the Airview sewer system and connect it to the City sewers. The attorney for Airview Utilities has even prov
utility into compliance. Airview is also waiting to get the response from the Public Service Commission on its appli
the plant into compliance. Also Airview Utilities has filed with the Public Service Commission to surrender and aba
atment plant into compliance.Airview has made application to abandon the sewer utility.Also, Airview continues to v
vn in hopes that the City will take over this facility, connect it to the city sewers and take this plant out of service.
inain this facility. This is an old, outdated plant and the chlorine contact tank is in a location that it can not be reach
blower had to be off on occasions to settle the plant. Operator is making every effort to keep this plant in complian
rom the effects of the extreme winter weather. Sub zero temperature, heavy snow and then heavy rain. Everything
ow pipe in the lagoon had a leak in it was letting water leak from the bottom of the lagoon(or close to the bottom)to
ows into the plant.Still working to get the City of Elizabethtown to take over the system.
taken over by the City of Elizabethtown. It is my understanding that the DOW has recently assisted in encouraging
emely wet weather and the I/I this system receives.
assist Airview Utilities in getting one of the Elizabethtown/Hardin County Utilities to take this system over and conne
e Regional Office for assistance in bringing this facility into compliance. Also, we continue our efforts to get one of
ice the plant secondary effluent is pumped direct to the chlorine contact tank and the tertiary lagoon is bypassed. It
oversight.Airview continues to work with the City of Elizabethtown to have the City take over this utility.
ant in to compliance but with so many residents not paying their monthly sewer fees Airview has a hard time being a
ent plant into compliance. Airview has had a meeting with George Haynes from DCA to get assistance, suggestion
plant in to compliance. But with the very wet weather during the month of February and the I/I issues in the system
in trying to bring this facility into compliance. I met with George Haynes, Division of Compliance Assistance, on Jan
s. The operator is doing his best to try and keep the plant in compliance.Airview continues to work with the City of
o temperature had a great deal to do with the exceedances reported for this facilities permit DMR. With frozen pipe

ıpliance. The plant is very old and needs to be eliminated. Discussions continue between Airview Utilities and the
o compliance. I feel that the ecoli sample was contaminated. Please note that Airview Utilities continues with its qu
his facility. Airview Utilities is currently working with George Haynes (DCA) and Elizabeth Coyle, Coyle & Associate

ke over the Airview sewer system and connect it to the City sewers. The attorney for Airview Utilities has even prov
utility into compliance. Airview is also waiting to get the response from the Public Service Commission on its appli
the plant into compliance. Also Airview Utilities has filed with the Public Service Commission to surrender and aba
atment plant into compliance.Airview has made application to abandon the sewer utility.Also, Airview continues to v
vn in hopes that the City will take over this facility, connect it to the city sewers and take this plant out of service.
inain this facility. This is an old, outdated plant and the chlorine contact tank is in a location that it can not be reach
blower had to be off on occasions to settle the plant. Operator is making every effort to keep this plant in complian
rom the effects of the extreme winter weather. Sub zero temperature, heavy snow and then heavy rain. Everything
ow pipe in the lagoon had a leak in it was letting water leak from the bottom of the lagoon(or close to the bottom)to
ows into the plant.Still working to get the City of Elizabethtown to take over the system.
taken over by the City of Elizabethtown. It is my understanding that the DOW has recently assisted in encouraging
emely wet weather and the I/I this system receives.
assist Airview Utilities in getting one of the Elizabethtown/Hardin County Utilities to take this system over and conne
e Regional Office for assistance in bringing this facility into compliance. Also, we continue our efforts to get one of
ice the plant secondary effluent is pumped direct to the chlorine contact tank and the tertiary lagoon is bypassed. It
oversight.Airview continues to work with the City of Elizabethtown to have the City take over this utility.
ant in to compliance but with so many residents not paying their monthly sewer fees Airview has a hard time being a
ent plant into compliance. Airview has had a meeting with George Haynes from DCA to get assistance, suggestion
plant in to compliance. But with the very wet weather during the month of February and the I/I issues in the system
in trying to bring this facility into compliance. I met with George Haynes, Division of Compliance Assistance, on Jan
s. The operator is doing his best to try and keep the plant in compliance.Airview continues to work with the City of

o temperature had a great deal to do with the exceedances reported for this facilities permit DMR. With frozen pipe
npliance. The plant is very old and needs to be eliminated. Discussions continue between Airview Utilities and the
o compliance. I feel that the ecoli sample was contaminated. Please note that Airview Utilities continues with its qu
his facility. Airview Utilities is currently working with George Haynes (DCA) and Elizabeth Coyle, Coyle & Associate

ke over the Airview sewer system and connect it to the City sewers. The attorney for Airview Utilities has even prov
ompliance. Also, Airview Utilities LLC continues to work with the City of Elizabethtown to get the City to assume th
utility into compliance. Airview is also waiting to get the response from the Public Service Commission on its appli
the plant into compliance. Also Airview Utilities has filed with the Public Service Commission to surrender and aba
ent plant into compliance.Again Airview continues to work with the City of Elizabethtown to get them to take over thi
atment plant into compliance.Airview has made application to abandon the sewer utility.Also, Airview continues to w
wn and with Hardin County to work out a transfer arrangement. The ultimate goal is to get the Airview Subdivision c
wn in hopes that the City will take over this facility, connect it to the city sewers and take this plant out of service.
compliance. Also, Airview continues to work with the KY. Public Service Commission to approve the abandonmer
inain this facility. This is an old, outdated plant and the chlorine contact tank is in a location that it can not be reach
uring the early part of July, due to very heavy storms with high winds, a number of trees were blown down blocking
blower had to be off on occasions to settle the plant. Operator is making every effort to keep this plant in complian
d, the operator had to keep the blowers off for periods to retain the solids in the treatment plant. The flow into the p
rom the effects of the extreme winter weather. Sub zero temperature, heavy snow and then heavy rain. Everything
at the treatment plant. The first part of August the plant was recovering from damage caused by vandalism. The a
ow pipe in the lagoon had a leak in it was letting water leak from the bottom of the lagoon(or close to the bottom)to
in and very heavy flow into the plant. The operator is making every effort to bring this plant into compliance but is c
e. Also Airview Utilities continues to pursue getting the City of Elizabethtown to take over this system. It is underst
ows into the plant.Still working to get the City of Elizabethtown to take over the system.
e collection is in questions. Communication with lab to follow. In addition, owners are working with an engineer to c
taken over by the City of Elizabethtown. It is my understanding that the DOW has recently assisted in encouraging
emely wet weather and the I/I this system receives.
assist Airview Utilities in getting one of the Elizabethtown/Hardin County Utilities to take this system over and conne
good working order.
e Regional Office for assistance in bringing this facility into compliance. Also, we continue our efforts to get one of
g the Airview WWTP into compliance. Also, Airview continues to work with the City of Elizabethtown and with Hard
ice the plant secondary effluent is pumped direct to the chlorine contact tank and the tertiary lagoon is bypassed. It
replaced. The best for everybody would be to abandon this plant and connect to a municipal system. Airview has
oversight.Airview continues to work with the City of Elizabethtown to have the City take over this utility.
ant in to compliance but with so many residents not paying their monthly sewer fees Airview has a hard time being a
ent plant into compliance. Airview has had a meeting with George Haynes from DCA to get assistance, suggestion
ort to bring the treatment plant in to compliance.Also, Airview continues to work with the City of Elizabethtown for the
andone this facility. It is very old. It has outlived its useful life. The biggest problem is the old chlorine contact tank
lity occurred due to heavy flow during periods of heavy rain and the sewers becoming charged with rain water. Als
act tank for this plant is the main cause of the permit exceedences. It can not be reached to clean it out. It is unkn
of 6/28/17. Be advised that Airview Utilities is doing everything possible to keep this facility in service and making e
plant in to compliance. But with the very wet weather during the month of February and the I/I issues in the system
blower/motor assemblies at the plant but it has now been repaired. In addition, a complete diffuser drop
in trying to bring this facility into compliance. I met with George Haynes, Division of Compliance Assistance, on Jan
every effort to properly operate and mainain this WWTP. It is an old plant that really should have been taken off lin
operator continue to make improvements.Airview continues to work to encourage the City of E-town to take over thi
ded its usefull life by at least 20 years. The chlorine contact tank that desperately needs to be cleaned is in a locati
s. The operator is doing his best to try and keep the plant in compliance.Airview continues to work with the City of
o temperature had a great deal to do with the exceedances reported for this facilities permit DMR. With frozen pipe
e.Airview Utilities continues to work with the City of Elizabethtown to get the City to assume the responsibility for th
npliance. The plant is very old and needs to be eliminated. Discussions continue between Airview Utilities and the

nce. The main problem is the location of the chlorine contact tank that desperately needs to be cleaned out but bec
effluent into compliance. Also, Airview Utilities continues its efforts to encourage the City of E-town to take control
o compliance. I feel that the ecoli sample was contaminated. Please note that Airview Utilities continues with its qu
his facility. Airview Utilities is currently working with George Haynes (DCA) and Elizabeth Coyle, Coyle & Associate

e over the Airview sewer system and connect it to the City sewers. The attorney for Airview Utilities has even prov
ompliance. Also, Airview Utilities LLC continues to work with the City of Elizabethtown to get the City to assume th
utility into compliance. Airview is also waiting to get the response from the Public Service Commission on its appli
the plant into compliance. Also Airview Utilities has filed with the Public Service Commission to surrender and aba
ent plant into compliance.Again Airview continues to work with the City of Elizabethtown to get them to take over thi
atment plant into compliance.Airview has made application to abandon the sewer utility.Also, Airview continues to v
vn and with Hardin County to work out a transfer arrangement. The ultimate goal is to get the Airview Subdivision
vn in hopes that the City will take over this facility, connect it to the city sewers and take this plant out of service.
compliance. Also, Airview continues to work with the KY. Public Service Commission to approve the abandonmer
inain this facility. This is an old, outdated plant and the chlorine contact tank is in a location that it can not be reach
uring the early part of July, due to very heavy storms with high winds, a number of trees were blown down blocking
blower had to be off on occasions to settle the plant. Operator is making every effort to keep this plant in complian
d, the operator had to keep the blowers off for periods to retain the solids in the treatment plant. The flow into the p
rom the effects of the extreme winter weather. Sub zero temperature, heavy snow and then heavy rain. Everything
at the treatment plant. The first part of August the plant was recovering from damage caused by vandalism. The a
ow pipe in the lagoon had a leak in it was letting water leak from the bottom of the lagoon(or close to the bottom)to
in and very heavy flow into the plant. The operator is making every effort to bring this plant into compliance but is c
e. Also Airview Utilities continues to pursue getting the City of Elizabethtown to take over this system. It is underst
ows into the plant.Still working to get the City of Elizabethtown to take over the system.
e collection is in questions. Communication with lab to follow. In addition, owners are working with an engineer to c
taken over by the City of Elizabethtown. It is my understanding that the DOW has recently assisted in encouragin
emely wet weather and the I/I this system receives.
assist Airview Utilities in getting one of the Elizabethtown/Hardin County Utilities to take this system over and conne
good working order.
e Regional Office for assistance in bringing this facility into compliance. Also, we continue our efforts to get one of
g the Airview WWTP into compliance. Also, Airview continues to work with the City of Elizabethtown and with Hard
ice the plant secondary effluent is pumped direct to the chlorine contact tank and the tertiary lagoon is bypassed. It
replaced. The best for everybody would be to abandon this plant and connect to a municipal system. Airview has
oversight.Airview continues to work with the City of Elizabethtown to have the City take over this utility.
ant in to compliance but with so many residents not paying their monthly sewer fees Airview has a hard time being a
ent plant into compliance. Airview has had a meeting with George Haynes from DCA to get assistance, suggestion
ort to bring the treatment plant in to compliance.Also, Airview continues to work with the City of Elizabethtown for th
andone this facility. It is very old. It has outlived its useful life. The biggest problem is the old chlorine contact tank
lity occurred due to heavy flow during periods of heavy rain and the sewers becoming charged with rain water. Als
act tank for this plant is the main cause of the permit exceedences. It can not be reached to clean it out. It is unkn
of 6/28/17. Be advised that Airview Utilities is doing everything possible to keep this facility in service and making e
plant in to compliance. But with the very wet weather during the month of February and the I/I issues in the system
blower/motor assemblies at the plant but it has now been repaired. In addition, a complete diffuser drop
in trying to bring this facility into compliance. I met with George Haynes, Division of Compliance Assistance, on Jan
every effort to properly operate and mainain this WWTP. It is an old plant that really should have been taken off lin
operator continue to make improvements.Airview continues to work to encourage the City of E-town to take over thi
ded its usefull life by at least 20 years. The chlorine contact tank that desperately needs to be cleaned is in a locati
s. The operator is doing his best to try and keep the plant in compliance.Airview continues to work with the City of
o temperature had a great deal to do with the exceedances reported for this facilities permit DMR. With frozen pipe
e.Airview Utilities continues to work with the City of Elizabethtown to get the City to assume the responsibility for th
pliance. The plant is very old and needs to be eliminated. Discussions continue between Airview Utilities and the

nce. The main problem is the location of the chlorine contact tank that desperately needs to be cleaned out but bec
effluent into compliance. Also, Airview Utilities continues its efforts to encourage the City of E-town to take control
o compliance. I feel that the ecoli sample was contaminated. Please note that Airview Utilities continues with its qu
his facility. Airview Utilities is currently working with George Haynes (DCA) and Elizabeth Coyle, Coyle & Associate

e over the Airview sewer system and connect it to the City sewers. The attorney for Airview Utilities has even prov
ompliance. Also, Airview Utilities LLC continues to work with the City of Elizabethtown to get the City to assume th
utility into compliance. Airview is also waiting to get the response from the Public Service Commission on its appli
the plant into compliance. Also Airview Utilities has filed with the Public Service Commission to surrender and aba
ent plant into compliance.Again Airview continues to work with the City of Elizabethtown to get them to take over thi
atment plant into compliance.Airview has made application to abandon the sewer utility.Also, Airview continues to v
wn and with Hardin County to work out a transfer arrangement. The ultimate goal is to get the Airview Subdivision
wn in hopes that the City will take over this facility, connect it to the city sewers and take this plant out of service.
compliance. Also, Airview continues to work with the KY. Public Service Commission to approve the abandonmer
inain this facility. This is an old, outdated plant and the chlorine contact tank is in a location that it can not be reach
uring the early part of July, due to very heavy storms with high winds, a number of trees were blown down blocking
blower had to be off on occasions to settle the plant. Operator is making every effort to keep this plant in complian
d, the operator had to keep the blowers off for periods to retain the solids in the treatment plant. The flow into the p
rom the effects of the extreme winter weather. Sub zero temperature, heavy snow and then heavy rain. Everything
at the treatment plant. The first part of August the plant was recovering from damage caused by vandalism. The
ow pipe in the lagoon had a leak in it was letting water leak from the bottom of the lagoon(or close to the bottom)to
in and very heavy flow into the plant. The operator is making every effort to bring this plant into compliance but is
e. Also Airview Utilities continues to pursue getting the City of Elizabethtown to take over this system. It is underst
ows into the plant.Still working to get the City of Elizabethtown to take over the system.
e collection is in questions. Communication with lab to follow. In addition, owners are working with an engineer to
taken over by the City of Elizabethtown. It is my understanding that the DOW has recently assisted in encouragin
emely wet weather and the I/I this system receives.
assist Airview Utilities in getting one of the Elizabethtown/Hardin County Utilities to take this system over and conne
good working order.
e Regional Office for assistance in bringing this facility into compliance. Also, we continue our efforts to get one of
g the Airview WWTP into compliance. Also, Airview continues to work with the City of Elizabethtown and with Hard
ice the plant secondary effluent is pumped direct to the chlorine contact tank and the tertiary lagoon is bypassed. It
replaced. The best for everybody would be to abandon this plant and connect to a municipal system. Airview has
oversight.Airview continues to work with the City of Elizabethtown to have the City take over this utility.
ant in to compliance but with so many residents not paying their monthly sewer fees Airview has a hard time being a
ent plant into compliance. Airview has had a meeting with George Haynes from DCA to get assistance, suggestion
rt to bring the treatment plant in to compliance.Also, Airview continues to work with the City of Elizabethtown for th
andone this facility. It is very old. It has outlived its useful life. The biggest problem is the old chlorine contact tank
lity occurred due to heavy flow during periods of heavy rain and the sewers becoming charged with rain water. Als
act tank for this plant is the main cause of the permit exceedences. It can not be reached to clean it out. It is unkn
f 6/28/17. Be advised that Airview Utilities is doing everything possible to keep this facility in service and making e
plant in to compliance. But with the very wet weather during the month of February and the I/I issues in the system
blower/motor assemblies at the plant but it has now been repaired. In addition, a complete diffuser drop
in trying to bring this facility into compliance. I met with George Haynes, Division of Compliance Assistance, on Jan
every effort to properly operate and mainain this WWTP. It is an old plant that really should have been taken off lin
operator continue to make improvements.Airview continues to work to encourage the City of E-town to take over thi
ded its usefull life by at least 20 years. The chlorine contact tank that desperately needs to be cleaned is in a locati
s. The operator is doing his best to try and keep the plant in compliance.Airview continues to work with the City of
o temperature had a great deal to do with the exceedances reported for this facilities permit DMR. With frozen pipe
e.Airview Utilities continues to work with the City of Elizabethtown to get the City to assume the responsibility for th
pliance. The plant is very old and needs to be eliminated. Discussions continue between Airview Utilities and the

nce. The main problem is the location of the chlorine contact tank that desperately needs to be cleaned out but bec
effluent into compliance. Also, Airview Utilities continues its efforts to encourage the City of E-town to take control
o compliance. I feel that the ecoli sample was contaminated. Please note that Airview Utilities continues with its qu
his facility. Airview Utilities is currently working with George Haynes (DCA) and Elizabeth Coyle, Coyle & Associate

e over the Airview sewer system and connect it to the City sewers. The attorney for Airview Utilities has even prov
ompliance. Also, Airview Utilities LLC continues to work with the City of Elizabethtown to get the City to assume th
utility into compliance. Airview is also waiting to get the response from the Public Service Commission on its appli
the plant into compliance. Also Airview Utilities has filed with the Public Service Commission to surrender and aba
ent plant into compliance.Again Airview continues to work with the City of Elizabethtown to get them to take over thi
atment plant into compliance.Airview has made application to abandon the sewer utility.Also, Airview continues to v
vn and with Hardin County to work out a transfer arrangement. The ultimate goal is to get the Airview Subdivision
vn in hopes that the City will take over this facility, connect it to the city sewers and take this plant out of service.
compliance. Also, Airview continues to work with the KY. Public Service Commission to approve the abandonmer
inain this facility. This is an old, outdated plant and the chlorine contact tank is in a location that it can not be reach
uring the early part of July, due to very heavy storms with high winds, a number of trees were blown down blocking
blower had to be off on occasions to settle the plant. Operator is making every effort to keep this plant in complian
d, the operator had to keep the blowers off for periods to retain the solids in the treatment plant. The flow into the p
rom the effects of the extreme winter weather. Sub zero temperature, heavy snow and then heavy rain. Everything
at the treatment plant. The first part of August the plant was recovering from damage caused by vandalism. The a
ow pipe in the lagoon had a leak in it was letting water leak from the bottom of the lagoon(or close to the bottom)to
in and very heavy flow into the plant. The operator is making every effort to bring this plant into compliance but is c
e. Also Airview Utilities continues to pursue getting the City of Elizabethtown to take over this system. It is underst
ows into the plant.Still working to get the City of Elizabethtown to take over the system.
e collection is in questions. Communication with lab to follow. In addition, owners are working with an engineer to c
taken over by the City of Elizabethtown. It is my understanding that the DOW has recently assisted in encouragin
emely wet weather and the I/I this system receives.
assist Airview Utilities in getting one of the Elizabethtown/Hardin County Utilities to take this system over and conne
good working order.
e Regional Office for assistance in bringing this facility into compliance. Also, we continue our efforts to get one of
g the Airview WWTP into compliance. Also, Airview continues to work with the City of Elizabethtown and with Hard
ice the plant secondary effluent is pumped direct to the chlorine contact tank and the tertiary lagoon is bypassed. It
replaced. The best for everybody would be to abandon this plant and connect to a municipal system. Airview has
oversight.Airview continues to work with the City of Elizabethtown to have the City take over this utility.
ant in to compliance but with so many residents not paying their monthly sewer fees Airview has a hard time being a
ent plant into compliance. Airview has had a meeting with George Haynes from DCA to get assistance, suggestion
ort to bring the treatment plant in to compliance.Also, Airview continues to work with the City of Elizabethtown for th
andone this facility. It is very old. It has outlived its useful life. The biggest problem is the old chlorine contact tank
lity occurred due to heavy flow during periods of heavy rain and the sewers becoming charged with rain water. Als
act tank for this plant is the main cause of the permit exceedences. It can not be reached to clean it out. It is unkn
of 6/28/17. Be advised that Airview Utilities is doing everything possible to keep this facility in service and making e
plant in to compliance. But with the very wet weather during the month of February and the I/I issues in the system
blower/motor assemblies at the plant but it has now been repaired. In addition, a complete diffuser drop
in trying to bring this facility into compliance. I met with George Haynes, Division of Compliance Assistance, on Jan
every effort to properly operate and mainain this WWTP. It is an old plant that really should have been taken off lin
operator continue to make improvements.Airview continues to work to encourage the City of E-town to take over thi
ded its usefull life by at least 20 years. The chlorine contact tank that desperately needs to be cleaned is in a locati
s. The operator is doing his best to try and keep the plant in compliance.Airview continues to work with the City of
o temperature had a great deal to do with the exceedances reported for this facilities permit DMR. With frozen pipe
e.Airview Utilities continues to work with the City of Elizabethtown to get the City to assume the responsibility for th
pliance. The plant is very old and needs to be eliminated. Discussions continue between Airview Utilities and the

nce. The main problem is the location of the chlorine contact tank that desperately needs to be cleaned out but bec
effluent into compliance. Also, Airview Utilities continues its efforts to encourage the City of E-town to take control
o compliance. I feel that the ecoli sample was contaminated. Please note that Airview Utilities continues with its qu
his facility. Airview Utilities is currently working with George Haynes (DCA) and Elizabeth Coyle, Coyle & Associate

e over the Airview sewer system and connect it to the City sewers. The attorney for Airview Utilities has even prov
ompliance. Also, Airview Utilities LLC continues to work with the City of Elizabethtown to get the City to assume th
utility into compliance. Airview is also waiting to get the response from the Public Service Commission on its appli
the plant into compliance. Also Airview Utilities has filed with the Public Service Commission to surrender and aba
ent plant into compliance.Again Airview continues to work with the City of Elizabethtown to get them to take over thi
atment plant into compliance.Airview has made application to abandon the sewer utility.Also, Airview continues to v
wn and with Hardin County to work out a transfer arrangement. The ultimate goal is to get the Airview Subdivision
wn in hopes that the City will take over this facility, connect it to the city sewers and take this plant out of service.
compliance. Also, Airview continues to work with the KY. Public Service Commission to approve the abandonmer
inain this facility. This is an old, outdated plant and the chlorine contact tank is in a location that it can not be reach
uring the early part of July, due to very heavy storms with high winds, a number of trees were blown down blocking
blower had to be off on occasions to settle the plant. Operator is making every effort to keep this plant in complian
d, the operator had to keep the blowers off for periods to retain the solids in the treatment plant. The flow into the p
rom the effects of the extreme winter weather. Sub zero temperature, heavy snow and then heavy rain. Everything
at the treatment plant. The first part of August the plant was recovering from damage caused by vandalism. The
ow pipe in the lagoon had a leak in it was letting water leak from the bottom of the lagoon(or close to the bottom)to
in and very heavy flow into the plant. The operator is making every effort to bring this plant into compliance but is
e. Also Airview Utilities continues to pursue getting the City of Elizabethtown to take over this system. It is underst
ows into the plant.Still working to get the City of Elizabethtown to take over the system.
e collection is in questions. Communication with lab to follow. In addition, owners are working with an engineer to
taken over by the City of Elizabethtown. It is my understanding that the DOW has recently assisted in encouragin
emely wet weather and the I/I this system receives.
assist Airview Utilities in getting one of the Elizabethtown/Hardin County Utilities to take this system over and conne
good working order.
e Regional Office for assistance in bringing this facility into compliance. Also, we continue our efforts to get one of
g the Airview WWTP into compliance. Also, Airview continues to work with the City of Elizabethtown and with Hard
ice the plant secondary effluent is pumped direct to the chlorine contact tank and the tertiary lagoon is bypassed. It
replaced. The best for everybody would be to abandon this plant and connect to a municipal system. Airview has
oversight.Airview continues to work with the City of Elizabethtown to have the City take over this utility.
ant in to compliance but with so many residents not paying their monthly sewer fees Airview has a hard time being a
ent plant into compliance. Airview has had a meeting with George Haynes from DCA to get assistance, suggestion
rt to bring the treatment plant in to compliance.Also, Airview continues to work with the City of Elizabethtown for th
andone this facility. It is very old. It has outlived its useful life. The biggest problem is the old chlorine contact tank
lity occurred due to heavy flow during periods of heavy rain and the sewers becoming charged with rain water. Als
act tank for this plant is the main cause of the permit exceedences. It can not be reached to clean it out. It is unkn
f 6/28/17. Be advised that Airview Utilities is doing everything possible to keep this facility in service and making e
plant in to compliance. But with the very wet weather during the month of February and the I/I issues in the system
blower/motor assemblies at the plant but it has now been repaired. In addition, a complete diffuser drop
in trying to bring this facility into compliance. I met with George Haynes, Division of Compliance Assistance, on Jan
every effort to properly operate and mainain this WWTP. It is an old plant that really should have been taken off lin
operator continue to make improvements.Airview continues to work to encourage the City of E-town to take over thi
ded its usefull life by at least 20 years. The chlorine contact tank that desperately needs to be cleaned is in a locati
s. The operator is doing his best to try and keep the plant in compliance.Airview continues to work with the City of
o temperature had a great deal to do with the exceedances reported for this facilities permit DMR. With frozen pipe
e.Airview Utilities continues to work with the City of Elizabethtown to get the City to assume the responsibility for th
pliance. The plant is very old and needs to be eliminated. Discussions continue between Airview Utilities and the

nce. The main problem is the location of the chlorine contact tank that desperately needs to be cleaned out but bec
effluent into compliance. Also, Airview Utilities continues its efforts to encourage the City of E-town to take control
o compliance. I feel that the ecoli sample was contaminated. Please note that Airview Utilities continues with its qu
his facility. Airview Utilities is currently working with George Haynes (DCA) and Elizabeth Coyle, Coyle & Associate

e over the Airview sewer system and connect it to the City sewers. The attorney for Airview Utilities has even prov
ompliance. Also, Airview Utilities LLC continues to work with the City of Elizabethtown to get the City to assume th
utility into compliance. Airview is also waiting to get the response from the Public Service Commission on its appli
the plant into compliance. Also Airview Utilities has filed with the Public Service Commission to surrender and aba
ent plant into compliance.Again Airview continues to work with the City of Elizabethtown to get them to take over thi
atment plant into compliance.Airview has made application to abandon the sewer utility.Also, Airview continues to v
vn and with Hardin County to work out a transfer arrangement. The ultimate goal is to get the Airview Subdivision
vn in hopes that the City will take over this facility, connect it to the city sewers and take this plant out of service.
compliance. Also, Airview continues to work with the KY. Public Service Commission to approve the abandonmer
inain this facility. This is an old, outdated plant and the chlorine contact tank is in a location that it can not be reach
uring the early part of July, due to very heavy storms with high winds, a number of trees were blown down blocking
blower had to be off on occasions to settle the plant. Operator is making every effort to keep this plant in complian
d, the operator had to keep the blowers off for periods to retain the solids in the treatment plant. The flow into the p
rom the effects of the extreme winter weather. Sub zero temperature, heavy snow and then heavy rain. Everything
at the treatment plant. The first part of August the plant was recovering from damage caused by vandalism. The a
ow pipe in the lagoon had a leak in it was letting water leak from the bottom of the lagoon(or close to the bottom)to
in and very heavy flow into the plant. The operator is making every effort to bring this plant into compliance but is c
e. Also Airview Utilities continues to pursue getting the City of Elizabethtown to take over this system. It is underst
ows into the plant.Still working to get the City of Elizabethtown to take over the system.
e collection is in questions. Communication with lab to follow. In addition, owners are working with an engineer to c
taken over by the City of Elizabethtown. It is my understanding that the DOW has recently assisted in encouragin
emely wet weather and the I/I this system receives.
assist Airview Utilities in getting one of the Elizabethtown/Hardin County Utilities to take this system over and conne
good working order.
e Regional Office for assistance in bringing this facility into compliance. Also, we continue our efforts to get one of
g the Airview WWTP into compliance. Also, Airview continues to work with the City of Elizabethtown and with Hard
ice the plant secondary effluent is pumped direct to the chlorine contact tank and the tertiary lagoon is bypassed. It
replaced. The best for everybody would be to abandon this plant and connect to a municipal system. Airview has
oversight.Airview continues to work with the City of Elizabethtown to have the City take over this utility.
ant in to compliance but with so many residents not paying their monthly sewer fees Airview has a hard time being a
ent plant into compliance. Airview has had a meeting with George Haynes from DCA to get assistance, suggestion
ort to bring the treatment plant in to compliance.Also, Airview continues to work with the City of Elizabethtown for th
andone this facility. It is very old. It has outlived its useful life. The biggest problem is the old chlorine contact tank
lity occurred due to heavy flow during periods of heavy rain and the sewers becoming charged with rain water. Als
act tank for this plant is the main cause of the permit exceedences. It can not be reached to clean it out. It is unkn
of 6/28/17. Be advised that Airview Utilities is doing everything possible to keep this facility in service and making e
plant in to compliance. But with the very wet weather during the month of February and the I/I issues in the system
blower/motor assemblies at the plant but it has now been repaired. In addition, a complete diffuser drop
in trying to bring this facility into compliance. I met with George Haynes, Division of Compliance Assistance, on Jan
every effort to properly operate and mainain this WWTP. It is an old plant that really should have been taken off lin
operator continue to make improvements.Airview continues to work to encourage the City of E-town to take over thi
ded its usefull life by at least 20 years. The chlorine contact tank that desperately needs to be cleaned is in a locati
s. The operator is doing his best to try and keep the plant in compliance.Airview continues to work with the City of
o temperature had a great deal to do with the exceedances reported for this facilities permit DMR. With frozen pipe
e.Airview Utilities continues to work with the City of Elizabethtown to get the City to assume the responsibility for th
pliance. The plant is very old and needs to be eliminated. Discussions continue between Airview Utilities and the

nce. The main problem is the location of the chlorine contact tank that desperately needs to be cleaned out but bec
effluent into compliance. Also, Airview Utilities continues its efforts to encourage the City of E-town to take control
o compliance. I feel that the ecoli sample was contaminated. Please note that Airview Utilities continues with its qu
his facility. Airview Utilities is currently working with George Haynes (DCA) and Elizabeth Coyle, Coyle & Associate

e over the Airview sewer system and connect it to the City sewers. The attorney for Airview Utilities has even prov
ompliance. Also, Airview Utilities LLC continues to work with the City of Elizabethtown to get the City to assume th
utility into compliance. Airview is also waiting to get the response from the Public Service Commission on its appli
the plant into compliance. Also Airview Utilities has filed with the Public Service Commission to surrender and aba
ent plant into compliance.Again Airview continues to work with the City of Elizabethtown to get them to take over thi
atment plant into compliance.Airview has made application to abandon the sewer utility.Also, Airview continues to v
wn and with Hardin County to work out a transfer arrangement. The ultimate goal is to get the Airview Subdivision
wn in hopes that the City will take over this facility, connect it to the city sewers and take this plant out of service.
compliance. Also, Airview continues to work with the KY. Public Service Commission to approve the abandonmer
inain this facility. This is an old, outdated plant and the chlorine contact tank is in a location that it can not be reach
uring the early part of July, due to very heavy storms with high winds, a number of trees were blown down blocking
blower had to be off on occasions to settle the plant. Operator is making every effort to keep this plant in complian
d, the operator had to keep the blowers off for periods to retain the solids in the treatment plant. The flow into the p
rom the effects of the extreme winter weather. Sub zero temperature, heavy snow and then heavy rain. Everything
at the treatment plant. The first part of August the plant was recovering from damage caused by vandalism. The
ow pipe in the lagoon had a leak in it was letting water leak from the bottom of the lagoon(or close to the bottom)to
in and very heavy flow into the plant. The operator is making every effort to bring this plant into compliance but is
e. Also Airview Utilities continues to pursue getting the City of Elizabethtown to take over this system. It is underst
ows into the plant.Still working to get the City of Elizabethtown to take over the system.
e collection is in questions. Communication with lab to follow. In addition, owners are working with an engineer to
taken over by the City of Elizabethtown. It is my understanding that the DOW has recently assisted in encouragin
emely wet weather and the I/I this system receives.
assist Airview Utilities in getting one of the Elizabethtown/Hardin County Utilities to take this system over and conne
good working order.
e Regional Office for assistance in bringing this facility into compliance. Also, we continue our efforts to get one of
g the Airview WWTP into compliance. Also, Airview continues to work with the City of Elizabethtown and with Hard
ice the plant secondary effluent is pumped direct to the chlorine contact tank and the tertiary lagoon is bypassed. It
replaced. The best for everybody would be to abandon this plant and connect to a municipal system. Airview has
oversight.Airview continues to work with the City of Elizabethtown to have the City take over this utility.
ant in to compliance but with so many residents not paying their monthly sewer fees Airview has a hard time being a
ent plant into compliance. Airview has had a meeting with George Haynes from DCA to get assistance, suggestion
rt to bring the treatment plant in to compliance.Also, Airview continues to work with the City of Elizabethtown for th
andone this facility. It is very old. It has outlived its useful life. The biggest problem is the old chlorine contact tank
lity occurred due to heavy flow during periods of heavy rain and the sewers becoming charged with rain water. Als
act tank for this plant is the main cause of the permit exceedences. It can not be reached to clean it out. It is unkn
f 6/28/17. Be advised that Airview Utilities is doing everything possible to keep this facility in service and making e
plant in to compliance. But with the very wet weather during the month of February and the I/I issues in the system
blower/motor assemblies at the plant but it has now been repaired. In addition, a complete diffuser drop
in trying to bring this facility into compliance. I met with George Haynes, Division of Compliance Assistance, on Jan
every effort to properly operate and mainain this WWTP. It is an old plant that really should have been taken off lin
operator continue to make improvements.Airview continues to work to encourage the City of E-town to take over thi
ded its usefull life by at least 20 years. The chlorine contact tank that desperately needs to be cleaned is in a locati
s. The operator is doing his best to try and keep the plant in compliance.Airview continues to work with the City of
o temperature had a great deal to do with the exceedances reported for this facilities permit DMR. With frozen pipe
e.Airview Utilities continues to work with the City of Elizabethtown to get the City to assume the responsibility for th
pliance. The plant is very old and needs to be eliminated. Discussions continue between Airview Utilities and the

nce. The main problem is the location of the chlorine contact tank that desperately needs to be cleaned out but bec
effluent into compliance. Also, Airview Utilities continues its efforts to encourage the City of E-town to take control
o compliance. I feel that the ecoli sample was contaminated. Please note that Airview Utilities continues with its qu
his facility. Airview Utilities is currently working with George Haynes (DCA) and Elizabeth Coyle, Coyle & Associate

e over the Airview sewer system and connect it to the City sewers. The attorney for Airview Utilities has even prov
ompliance. Also, Airview Utilities LLC continues to work with the City of Elizabethtown to get the City to assume th
utility into compliance. Airview is also waiting to get the response from the Public Service Commission on its appli
the plant into compliance. Also Airview Utilities has filed with the Public Service Commission to surrender and aba
ent plant into compliance.Again Airview continues to work with the City of Elizabethtown to get them to take over thi
atment plant into compliance.Airview has made application to abandon the sewer utility.Also, Airview continues to v
vn and with Hardin County to work out a transfer arrangement. The ultimate goal is to get the Airview Subdivision
vn in hopes that the City will take over this facility, connect it to the city sewers and take this plant out of service.
compliance. Also, Airview continues to work with the KY. Public Service Commission to approve the abandonmer
inain this facility. This is an old, outdated plant and the chlorine contact tank is in a location that it can not be reach
uring the early part of July, due to very heavy storms with high winds, a number of trees were blown down blocking
blower had to be off on occasions to settle the plant. Operator is making every effort to keep this plant in complian
d, the operator had to keep the blowers off for periods to retain the solids in the treatment plant. The flow into the p
rom the effects of the extreme winter weather. Sub zero temperature, heavy snow and then heavy rain. Everything
at the treatment plant. The first part of August the plant was recovering from damage caused by vandalism. The a
ow pipe in the lagoon had a leak in it was letting water leak from the bottom of the lagoon(or close to the bottom)to
in and very heavy flow into the plant. The operator is making every effort to bring this plant into compliance but is c
e. Also Airview Utilities continues to pursue getting the City of Elizabethtown to take over this system. It is underst
ows into the plant.Still working to get the City of Elizabethtown to take over the system.
e collection is in questions. Communication with lab to follow. In addition, owners are working with an engineer to c
taken over by the City of Elizabethtown. It is my understanding that the DOW has recently assisted in encouragin
emely wet weather and the I/I this system receives.
assist Airview Utilities in getting one of the Elizabethtown/Hardin County Utilities to take this system over and conne
good working order.
e Regional Office for assistance in bringing this facility into compliance. Also, we continue our efforts to get one of
g the Airview WWTP into compliance. Also, Airview continues to work with the City of Elizabethtown and with Hard
ice the plant secondary effluent is pumped direct to the chlorine contact tank and the tertiary lagoon is bypassed. It
replaced. The best for everybody would be to abandon this plant and connect to a municipal system. Airview has
oversight.Airview continues to work with the City of Elizabethtown to have the City take over this utility.
ant in to compliance but with so many residents not paying their monthly sewer fees Airview has a hard time being a
ent plant into compliance. Airview has had a meeting with George Haynes from DCA to get assistance, suggestion
ort to bring the treatment plant in to compliance.Also, Airview continues to work with the City of Elizabethtown for th
andone this facility. It is very old. It has outlived its useful life. The biggest problem is the old chlorine contact tank
lity occurred due to heavy flow during periods of heavy rain and the sewers becoming charged with rain water. Als
act tank for this plant is the main cause of the permit exceedences. It can not be reached to clean it out. It is unkn
of 6/28/17. Be advised that Airview Utilities is doing everything possible to keep this facility in service and making e
plant in to compliance. But with the very wet weather during the month of February and the I/I issues in the system
blower/motor assemblies at the plant but it has now been repaired. In addition, a complete diffuser drop
in trying to bring this facility into compliance. I met with George Haynes, Division of Compliance Assistance, on Jan
every effort to properly operate and mainain this WWTP. It is an old plant that really should have been taken off lin
operator continue to make improvements.Airview continues to work to encourage the City of E-town to take over thi
ded its usefull life by at least 20 years. The chlorine contact tank that desperately needs to be cleaned is in a locati
s. The operator is doing his best to try and keep the plant in compliance.Airview continues to work with the City of
o temperature had a great deal to do with the exceedances reported for this facilities permit DMR. With frozen pipe
e.Airview Utilities continues to work with the City of Elizabethtown to get the City to assume the responsibility for th
pliance. The plant is very old and needs to be eliminated. Discussions continue between Airview Utilities and the

nce. The main problem is the location of the chlorine contact tank that desperately needs to be cleaned out but bec
effluent into compliance. Also, Airview Utilities continues its efforts to encourage the City of E-town to take control
o compliance. I feel that the ecoli sample was contaminated. Please note that Airview Utilities continues with its qu
his facility. Airview Utilities is currently working with George Haynes (DCA) and Elizabeth Coyle, Coyle & Associate

e over the Airview sewer system and connect it to the City sewers. The attorney for Airview Utilities has even prov
ompliance. Also, Airview Utilities LLC continues to work with the City of Elizabethtown to get the City to assume th
utility into compliance. Airview is also waiting to get the response from the Public Service Commission on its appli
the plant into compliance. Also Airview Utilities has filed with the Public Service Commission to surrender and aba
ent plant into compliance.Again Airview continues to work with the City of Elizabethtown to get them to take over thi
atment plant into compliance.Airview has made application to abandon the sewer utility.Also, Airview continues to v
wn and with Hardin County to work out a transfer arrangement. The ultimate goal is to get the Airview Subdivision
wn in hopes that the City will take over this facility, connect it to the city sewers and take this plant out of service.
compliance. Also, Airview continues to work with the KY. Public Service Commission to approve the abandonmer
inain this facility. This is an old, outdated plant and the chlorine contact tank is in a location that it can not be reach
uring the early part of July, due to very heavy storms with high winds, a number of trees were blown down blocking
blower had to be off on occasions to settle the plant. Operator is making every effort to keep this plant in complian
d, the operator had to keep the blowers off for periods to retain the solids in the treatment plant. The flow into the p
rom the effects of the extreme winter weather. Sub zero temperature, heavy snow and then heavy rain. Everything
at the treatment plant. The first part of August the plant was recovering from damage caused by vandalism. The
ow pipe in the lagoon had a leak in it was letting water leak from the bottom of the lagoon(or close to the bottom)to
in and very heavy flow into the plant. The operator is making every effort to bring this plant into compliance but is
e. Also Airview Utilities continues to pursue getting the City of Elizabethtown to take over this system. It is underst
ows into the plant.Still working to get the City of Elizabethtown to take over the system.
e collection is in questions. Communication with lab to follow. In addition, owners are working with an engineer to
taken over by the City of Elizabethtown. It is my understanding that the DOW has recently assisted in encouragin
emely wet weather and the I/I this system receives.
assist Airview Utilities in getting one of the Elizabethtown/Hardin County Utilities to take this system over and conne
good working order.
e Regional Office for assistance in bringing this facility into compliance. Also, we continue our efforts to get one of
g the Airview WWTP into compliance. Also, Airview continues to work with the City of Elizabethtown and with Hard
ice the plant secondary effluent is pumped direct to the chlorine contact tank and the tertiary lagoon is bypassed. It
replaced. The best for everybody would be to abandon this plant and connect to a municipal system. Airview has
oversight.Airview continues to work with the City of Elizabethtown to have the City take over this utility.
ant in to compliance but with so many residents not paying their monthly sewer fees Airview has a hard time being a
ent plant into compliance. Airview has had a meeting with George Haynes from DCA to get assistance, suggestion
rt to bring the treatment plant in to compliance.Also, Airview continues to work with the City of Elizabethtown for th
andone this facility. It is very old. It has outlived its useful life. The biggest problem is the old chlorine contact tank
lity occurred due to heavy flow during periods of heavy rain and the sewers becoming charged with rain water. Als
act tank for this plant is the main cause of the permit exceedences. It can not be reached to clean it out. It is unkn
f 6/28/17. Be advised that Airview Utilities is doing everything possible to keep this facility in service and making e
plant in to compliance. But with the very wet weather during the month of February and the I/I issues in the system
blower/motor assemblies at the plant but it has now been repaired. In addition, a complete diffuser drop
in trying to bring this facility into compliance. I met with George Haynes, Division of Compliance Assistance, on Jan
every effort to properly operate and mainain this WWTP. It is an old plant that really should have been taken off lin
operator continue to make improvements.Airview continues to work to encourage the City of E-town to take over thi
ded its usefull life by at least 20 years. The chlorine contact tank that desperately needs to be cleaned is in a locati
s. The operator is doing his best to try and keep the plant in compliance.Airview continues to work with the City of
o temperature had a great deal to do with the exceedances reported for this facilities permit DMR. With frozen pipe
e.Airview Utilities continues to work with the City of Elizabethtown to get the City to assume the responsibility for th
pliance. The plant is very old and needs to be eliminated. Discussions continue between Airview Utilities and the

nce. The main problem is the location of the chlorine contact tank that desperately needs to be cleaned out but bec
effluent into compliance. Also, Airview Utilities continues its efforts to encourage the City of E-town to take control
o compliance. I feel that the ecoli sample was contaminated. Please note that Airview Utilities continues with its qu
his facility. Airview Utilities is currently working with George Haynes (DCA) and Elizabeth Coyle, Coyle & Associate

e over the Airview sewer system and connect it to the City sewers. The attorney for Airview Utilities has even prov
ompliance. Also, Airview Utilities LLC continues to work with the City of Elizabethtown to get the City to assume th
utility into compliance. Airview is also waiting to get the response from the Public Service Commission on its appli
the plant into compliance. Also Airview Utilities has filed with the Public Service Commission to surrender and aba
ent plant into compliance.Again Airview continues to work with the City of Elizabethtown to get them to take over thi
atment plant into compliance.Airview has made application to abandon the sewer utility.Also, Airview continues to v
vn and with Hardin County to work out a transfer arrangement. The ultimate goal is to get the Airview Subdivision
vn in hopes that the City will take over this facility, connect it to the city sewers and take this plant out of service.
compliance. Also, Airview continues to work with the KY. Public Service Commission to approve the abandonmer
inain this facility. This is an old, outdated plant and the chlorine contact tank is in a location that it can not be reach
uring the early part of July, due to very heavy storms with high winds, a number of trees were blown down blocking
blower had to be off on occasions to settle the plant. Operator is making every effort to keep this plant in complian
d, the operator had to keep the blowers off for periods to retain the solids in the treatment plant. The flow into the p
rom the effects of the extreme winter weather. Sub zero temperature, heavy snow and then heavy rain. Everything
at the treatment plant. The first part of August the plant was recovering from damage caused by vandalism. The a
ow pipe in the lagoon had a leak in it was letting water leak from the bottom of the lagoon(or close to the bottom)to
in and very heavy flow into the plant. The operator is making every effort to bring this plant into compliance but is c
e. Also Airview Utilities continues to pursue getting the City of Elizabethtown to take over this system. It is underst
ows into the plant.Still working to get the City of Elizabethtown to take over the system.
e collection is in questions. Communication with lab to follow. In addition, owners are working with an engineer to c
taken over by the City of Elizabethtown. It is my understanding that the DOW has recently assisted in encouragin
emely wet weather and the I/I this system receives.
assist Airview Utilities in getting one of the Elizabethtown/Hardin County Utilities to take this system over and conne
good working order.
e Regional Office for assistance in bringing this facility into compliance. Also, we continue our efforts to get one of
g the Airview WWTP into compliance. Also, Airview continues to work with the City of Elizabethtown and with Hard
ice the plant secondary effluent is pumped direct to the chlorine contact tank and the tertiary lagoon is bypassed. It
replaced. The best for everybody would be to abandon this plant and connect to a municipal system. Airview has
oversight.Airview continues to work with the City of Elizabethtown to have the City take over this utility.
ant in to compliance but with so many residents not paying their monthly sewer fees Airview has a hard time being a
ent plant into compliance. Airview has had a meeting with George Haynes from DCA to get assistance, suggestion
ort to bring the treatment plant in to compliance.Also, Airview continues to work with the City of Elizabethtown for th
andone this facility. It is very old. It has outlived its useful life. The biggest problem is the old chlorine contact tank
lity occurred due to heavy flow during periods of heavy rain and the sewers becoming charged with rain water. Als
act tank for this plant is the main cause of the permit exceedences. It can not be reached to clean it out. It is unkn
of 6/28/17. Be advised that Airview Utilities is doing everything possible to keep this facility in service and making e
plant in to compliance. But with the very wet weather during the month of February and the I/I issues in the system
blower/motor assemblies at the plant but it has now been repaired. In addition, a complete diffuser drop
in trying to bring this facility into compliance. I met with George Haynes, Division of Compliance Assistance, on Jan
every effort to properly operate and mainain this WWTP. It is an old plant that really should have been taken off lin
operator continue to make improvements.Airview continues to work to encourage the City of E-town to take over thi
ded its usefull life by at least 20 years. The chlorine contact tank that desperately needs to be cleaned is in a locati
s. The operator is doing his best to try and keep the plant in compliance.Airview continues to work with the City of
o temperature had a great deal to do with the exceedances reported for this facilities permit DMR. With frozen pipe
e.Airview Utilities continues to work with the City of Elizabethtown to get the City to assume the responsibility for th
pliance. The plant is very old and needs to be eliminated. Discussions continue between Airview Utilities and the

nce. The main problem is the location of the chlorine contact tank that desperately needs to be cleaned out but bec
effluent into compliance. Also, Airview Utilities continues its efforts to encourage the City of E-town to take control
o compliance. I feel that the ecoli sample was contaminated. Please note that Airview Utilities continues with its qu
his facility. Airview Utilities is currently working with George Haynes (DCA) and Elizabeth Coyle, Coyle & Associate

vided the City Attorney with information about 2 types of funding that would be available for the City so they could ha
e responsibility for this system and connect it to the City sewers.
ication to abandon. The City of Elizabethtown would hopefully then take over this facility and connect to the city trur
ndon this facility. In addition Airview is working with the City of Elizabethtown to get the City to take over this system
s system.The DOW is assisting in this endeavor.
work with the City of Elizabethtown to get the city to take over this utility.
on a regional system. Airview continues to work toward compliance.

nt of this facility. And continues to work with the City of Elizabethtown to get them to work with Airview to approve th
ıed to clean it out. Airview continues to try an work with the local Hardin County and Elizabethtown municipalities to
the access to the chlorine contact tank. Note: This is a very difficult place to get to. Eventually service men we ab
ıce. Also, Airview Utilities continues to work with the City of Elizabethtown to get the City to take over this system.
plant at times was very heavy.
g has now thawed out and all equipment is back in service.
air lift sludge return was torn up and had to be rebuilt. The disinfection equipment was also damaged and had to be
the chlorine contact tank. So it was necessary to plug that pipe where it enters the CCT. The lagoon is out of serv
difficult to do with the I/I this system receives. Airview, with the help of its attorney, continues to try and get the City
tood that the DOW is trying help in this also.

design modifications to the treatment plant or the design of a new plant which would be submitted for approval to the
g the City to take this system. Continued efforts would be appreciated.

ect it to their trunck line. This treatment plant is old/outdated and the chlorine contact tank is in a location that it is im

the local municipalities to take this facility over and connect the Airview subdivision sewers to a trunk line and elimir
din County to get this system connected to the City or County trunk line so this very old plant can be taken off line.
t was just in the last two weeks that the operator discovered that there was a leak in the lagoon transfer pipe and it v
been trying for quite sometime to get one of the local agencies to take this plant and connect to their trunk line. Lat

able to pay the electric, water, lab expenses and chemical bills. Airview has filed with the PSC to surrender and aba
ns, on the best way to bring it into compliance. The major problem is the location of the chlorine contact and its cond
e purpose of the City assuming the responsibility of the utility and getting it connected to the City sewer system. Air
that needs to be cleaned out. But it is impossible to get to with a vacuum truck. Also, many of the residents don't p
o note that every effort is being made to properly operate this plant and bring it into compliance. But due to the age
own why it was ever approved to placed where it is. Also note that Airview Utilities continues discussions with the C
very effort to bring this plant into compliance. It is an aged plant, far beyond its useful life and cash flow is a major p
it is very difficult to achieve compliance. But will continue to work to that goal.Airview continues to communicate wi
renovation has been completed of all drops, including the replacement of all course bubble diffusers. With th
nuary 28th, 2016 because I had requested DCA assistance in bringing the plant into compliance.In addition I continu
e years ago and connected to a regional system. Airview Utilities has made application to the Public Service Comn
is system. The DOW is helping in this matter.
on that is impossible to reach. But Airview Utilities is trying very hard to properly operate this facility. Airview contin
Elizabethtown to get the City to take over this utility. Increased help from the DOW would be appreciated.
es and equipment that wouldn't run it was very difficult to meet the permit limits. All equipment is back in service an
is system. The DOW is working with Airview also to encourage the City to take it.
City of Elizabethtown for Airview to transfer this utility to the City. Of course the intent is for the plant to be eliminate
cause of its location it is impossible to get to with a tank truck to clean it out. on going efforts are being made to get
l of this facility. The DOW is helping in this matter also.
uest to transfer this utility to the City of Elizabethtown.
s (environmental engineer) exploring the possibility of using Peracetic Acid for disinfection. Charlie Roth at the Lou

vided the City Attorney with information about 2 types of funding that would be available for the City so they could ha
e responsibility for this system and connect it to the City sewers.
ication to abandon. The City of Elizabethtown would hopefully then take over this facility and connect to the city trur
ndon this facility. In addition Airview is working with the City of Elizabethtown to get the City to take over this systen
s system.The DOW is assisting in this endeavor.
work with the City of Elizabethtown to get the city to take over this utility.
on a regional system. Airview continues to work toward compliance.

nt of this facility. And continues to work with the City of Elizabethtown to get them to work with Airview to approve th
ned to clean it out. Airview continues to try an work with the local Hardin County and Elizabethtown municipalities to
the access to the chlorine contact tank. Note: This is a very difficult place to get to. Eventually service men we ab
nce. Also, Airview Utilities continues to work with the City of Elizabethtown to get the City to take over this system.
plant at times was very heavy.
g has now thawed out and all equipment is back in service.
air lift sludge return was torn up and had to be rebuilt. The disinfection equipment was also damaged and had to be
the chlorine contact tank. So it was necessary to plug that pipe where it enters the CCT. The lagoon is out of serv
difficult to do with the I/I this system receives. Airview, with the help of its attorney, continues to try and get the City
tood that the DOW is trying help in this also.

design modifications to the treatment plant or the design of a new plant which would be submitted for approval to the
g the City to take this system. Continued efforts would be appreciated.

ect it to their trunck line. This treatment plant is old/outdated and the chlorine contact tank is in a location that it is im

the local municipalities to take this facility over and connect the Airview subdivision sewers to a trunk line and elimin
din County to get this system connected to the City or County trunk line so this very old plant can be taken off line.
t was just in the last two weeks that the operator discovered that there was a leak in the lagoon transfer pipe and it w
been trying for quite sometime to get one of the local agencies to take this plant and connect to their trunk line. Lat

able to pay the electric, water, lab expenses and chemical bills. Airview has filed with the PSC to surrender and aba
ns, on the best way to bring it into compliance. The major problem is the location of the chlorine contact and its cond
e purpose of the City assuming the responsibility of the utility and getting it connected to the City sewer system. Air
that needs to be cleaned out. But it is impossible to get to with a vacuum truck. Also, many of the residents don't p
o note that every effort is being made to properly operate this plant and bring it into compliance. But due to the age
own why it was ever approved to placed where it is. Also note that Airview Utilities continues discussions with the C
very effort to bring this plant into compliance. It is an aged plant, far beyond its useful life and cash flow is a major p
it is very difficult to achieve compliance. But will continue to work to that goal.Airview continues to communicate wi
renovation has been completed of all drops, including the replacement of all course bubble diffusers. With th
nuary 28th, 2016 because I had requested DCA assistance in bringing the plant into compliance.In addition I continu
e years ago and connected to a regional system. Airview Utilities has made application to the Public Service Comm
is system. The DOW is helping in this matter.
on that is impossible to reach. But Airview Utilities is trying very hard to properly operate this facility. Airview contin
Elizabethtown to get the City to take over this utility. Increased help from the DOW would be appreciated.
es and equipment that wouldn't run it was very difficult to meet the permit limits. All equipment is back in service an
is system. The DOW is working with Airview also to encourage the City to take it.
City of Elizabethtown for Airview to transfer this utility to the City. Of course the intent is for the plant to be eliminate
cause of its location it is impossible to get to with a tank truck to clean it out. on going efforts are being made to get
l of this facility. The DOW is helping in this matter also.
uest to transfer this utility to the City of Elizabethtown.
s (environmental engineer) exploring the possibility of using Peracetic Acid for disinfection. Charlie Roth at the Lou

vided the City Attorney with information about 2 types of funding that would be available for the City so they could ha
e responsibility for this system and connect it to the City sewers.
ication to abandon. The City of Elizabethtown would hopefully then take over this facility and connect to the city trur
ndon this facility. In addition Airview is working with the City of Elizabethtown to get the City to take over this systen
s system.The DOW is assisting in this endeavor.
work with the City of Elizabethtown to get the city to take over this utility.
on a regional system. Airview continues to work toward compliance.

nt of this facility. And continues to work with the City of Elizabethtown to get them to work with Airview to approve th
ned to clean it out. Airview continues to try an work with the local Hardin County and Elizabethtown municipalities to
the access to the chlorine contact tank. Note: This is a very difficult place to get to. Eventually service men we ab
nce. Also, Airview Utilities continues to work with the City of Elizabethtown to get the City to take over this system.
plant at times was very heavy.
g has now thawed out and all equipment is back in service.
air lift sludge return was torn up and had to be rebuilt. The disinfection equipment was also damaged and had to be
the chlorine contact tank. So it was necessary to plug that pipe where it enters the CCT. The lagoon is out of serv
difficult to do with the I/I this system receives. Airview, with the help of its attorney, continues to try and get the City
tood that the DOW is trying help in this also.

design modifications to the treatment plant or the design of a new plant which would be submitted for approval to the
g the City to take this system. Continued efforts would be appreciated.

ect it to their trunck line. This treatment plant is old/outdated and the chlorine contact tank is in a location that it is im

the local municipalities to take this facility over and connect the Airview subdivision sewers to a trunk line and elimin
din County to get this system connected to the City or County trunk line so this very old plant can be taken off line.
t was just in the last two weeks that the operator discovered that there was a leak in the lagoon transfer pipe and it w
been trying for quite sometime to get one of the local agencies to take this plant and connect to their trunk line. Lat

able to pay the electric, water, lab expenses and chemical bills. Airview has filed with the PSC to surrender and aba
ns, on the best way to bring it into compliance. The major problem is the location of the chlorine contact and its cond
e purpose of the City assuming the responsibility of the utility and getting it connected to the City sewer system. Air
that needs to be cleaned out. But it is impossible to get to with a vacuum truck. Also, many of the residents don't p
o note that every effort is being made to properly operate this plant and bring it into compliance. But due to the age
own why it was ever approved to placed where it is. Also note that Airview Utilities continues discussions with the C
very effort to bring this plant into compliance. It is an aged plant, far beyond its useful life and cash flow is a major p
it is very difficult to achieve compliance. But will continue to work to that goal.Airview continues to communicate wi
renovation has been completed of all drops, including the replacement of all course bubble diffusers. With th
nuary 28th, 2016 because I had requested DCA assistance in bringing the plant into compliance.In addition I continu
e years ago and connected to a regional system. Airview Utilities has made application to the Public Service Comm
is system. The DOW is helping in this matter.
on that is impossible to reach. But Airview Utilities is trying very hard to properly operate this facility. Airview contin
Elizabethtown to get the City to take over this utility. Increased help from the DOW would be appreciated.
es and equipment that wouldn't run it was very difficult to meet the permit limits. All equipment is back in service an
is system. The DOW is working with Airview also to encourage the City to take it.
City of Elizabethtown for Airview to transfer this utility to the City. Of course the intent is for the plant to be eliminate
cause of its location it is impossible to get to with a tank truck to clean it out. on going efforts are being made to get
l of this facility. The DOW is helping in this matter also.
uest to transfer this utility to the City of Elizabethtown.
s (environmental engineer) exploring the possibility of using Peracetic Acid for disinfection. Charlie Roth at the Lou

vided the City Attorney with information about 2 types of funding that would be available for the City so they could ha
e responsibility for this system and connect it to the City sewers.
ication to abandon. The City of Elizabethtown would hopefully then take over this facility and connect to the city trur
ndon this facility. In addition Airview is working with the City of Elizabethtown to get the City to take over this systen
s system.The DOW is assisting in this endeavor.
work with the City of Elizabethtown to get the city to take over this utility.
on a regional system. Airview continues to work toward compliance.

nt of this facility. And continues to work with the City of Elizabethtown to get them to work with Airview to approve th
ned to clean it out. Airview continues to try an work with the local Hardin County and Elizabethtown municipalities to
the access to the chlorine contact tank. Note: This is a very difficult place to get to. Eventually service men we ab
nce. Also, Airview Utilities continues to work with the City of Elizabethtown to get the City to take over this system.
plant at times was very heavy.
g has now thawed out and all equipment is back in service.
air lift sludge return was torn up and had to be rebuilt. The disinfection equipment was also damaged and had to be
the chlorine contact tank. So it was necessary to plug that pipe where it enters the CCT. The lagoon is out of serv
difficult to do with the I/I this system receives. Airview, with the help of its attorney, continues to try and get the City
tood that the DOW is trying help in this also.

design modifications to the treatment plant or the design of a new plant which would be submitted for approval to the
g the City to take this system. Continued efforts would be appreciated.

ect it to their trunck line. This treatment plant is old/outdated and the chlorine contact tank is in a location that it is im

the local municipalities to take this facility over and connect the Airview subdivision sewers to a trunk line and elimin
din County to get this system connected to the City or County trunk line so this very old plant can be taken off line.
t was just in the last two weeks that the operator discovered that there was a leak in the lagoon transfer pipe and it w
been trying for quite sometime to get one of the local agencies to take this plant and connect to their trunk line. Lat

able to pay the electric, water, lab expenses and chemical bills. Airview has filed with the PSC to surrender and aba
ns, on the best way to bring it into compliance. The major problem is the location of the chlorine contact and its cond
e purpose of the City assuming the responsibility of the utility and getting it connected to the City sewer system. Air
that needs to be cleaned out. But it is impossible to get to with a vacuum truck. Also, many of the residents don't p
o note that every effort is being made to properly operate this plant and bring it into compliance. But due to the age
own why it was ever approved to placed where it is. Also note that Airview Utilities continues discussions with the C
very effort to bring this plant into compliance. It is an aged plant, far beyond its useful life and cash flow is a major p
it is very difficult to achieve compliance. But will continue to work to that goal.Airview continues to communicate wi
renovation has been completed of all drops, including the replacement of all course bubble diffusers. With th
nuary 28th, 2016 because I had requested DCA assistance in bringing the plant into compliance.In addition I continu
e years ago and connected to a regional system. Airview Utilities has made application to the Public Service Comm
is system. The DOW is helping in this matter.
on that is impossible to reach. But Airview Utilities is trying very hard to properly operate this facility. Airview contin
Elizabethtown to get the City to take over this utility. Increased help from the DOW would be appreciated.
es and equipment that wouldn't run it was very difficult to meet the permit limits. All equipment is back in service an
is system. The DOW is working with Airview also to encourage the City to take it.
City of Elizabethtown for Airview to transfer this utility to the City. Of course the intent is for the plant to be eliminate
cause of its location it is impossible to get to with a tank truck to clean it out. on going efforts are being made to get
l of this facility. The DOW is helping in this matter also.
uest to transfer this utility to the City of Elizabethtown.
s (environmental engineer) exploring the possibility of using Peracetic Acid for disinfection. Charlie Roth at the Lou

vided the City Attorney with information about 2 types of funding that would be available for the City so they could ha
e responsibility for this system and connect it to the City sewers.
ication to abandon. The City of Elizabethtown would hopefully then take over this facility and connect to the city trur
ndon this facility. In addition Airview is working with the City of Elizabethtown to get the City to take over this systen
s system.The DOW is assisting in this endeavor.
work with the City of Elizabethtown to get the city to take over this utility.
on a regional system. Airview continues to work toward compliance.

nt of this facility. And continues to work with the City of Elizabethtown to get them to work with Airview to approve th
ned to clean it out. Airview continues to try an work with the local Hardin County and Elizabethtown municipalities to
the access to the chlorine contact tank. Note: This is a very difficult place to get to. Eventually service men we ab
nce. Also, Airview Utilities continues to work with the City of Elizabethtown to get the City to take over this system.
plant at times was very heavy.
g has now thawed out and all equipment is back in service.
air lift sludge return was torn up and had to be rebuilt. The disinfection equipment was also damaged and had to be
the chlorine contact tank. So it was necessary to plug that pipe where it enters the CCT. The lagoon is out of serv
difficult to do with the I/I this system receives. Airview, with the help of its attorney, continues to try and get the City
tood that the DOW is trying help in this also.

design modifications to the treatment plant or the design of a new plant which would be submitted for approval to the
g the City to take this system. Continued efforts would be appreciated.

ect it to their trunck line. This treatment plant is old/outdated and the chlorine contact tank is in a location that it is im

the local municipalities to take this facility over and connect the Airview subdivision sewers to a trunk line and elimin
din County to get this system connected to the City or County trunk line so this very old plant can be taken off line.
t was just in the last two weeks that the operator discovered that there was a leak in the lagoon transfer pipe and it w
been trying for quite sometime to get one of the local agencies to take this plant and connect to their trunk line. Lat

able to pay the electric, water, lab expenses and chemical bills. Airview has filed with the PSC to surrender and aba
ns, on the best way to bring it into compliance. The major problem is the location of the chlorine contact and its cond
e purpose of the City assuming the responsibility of the utility and getting it connected to the City sewer system. Air
that needs to be cleaned out. But it is impossible to get to with a vacuum truck. Also, many of the residents don't p
o note that every effort is being made to properly operate this plant and bring it into compliance. But due to the age
own why it was ever approved to placed where it is. Also note that Airview Utilities continues discussions with the C
very effort to bring this plant into compliance. It is an aged plant, far beyond its useful life and cash flow is a major p
it is very difficult to achieve compliance. But will continue to work to that goal.Airview continues to communicate wi
renovation has been completed of all drops, including the replacement of all course bubble diffusers. With th
nuary 28th, 2016 because I had requested DCA assistance in bringing the plant into compliance.In addition I continu
e years ago and connected to a regional system. Airview Utilities has made application to the Public Service Comm
is system. The DOW is helping in this matter.
on that is impossible to reach. But Airview Utilities is trying very hard to properly operate this facility. Airview contin
Elizabethtown to get the City to take over this utility. Increased help from the DOW would be appreciated.
es and equipment that wouldn't run it was very difficult to meet the permit limits. All equipment is back in service an
is system. The DOW is working with Airview also to encourage the City to take it.
City of Elizabethtown for Airview to transfer this utility to the City. Of course the intent is for the plant to be eliminate
cause of its location it is impossible to get to with a tank truck to clean it out. on going efforts are being made to get
l of this facility. The DOW is helping in this matter also.
uest to transfer this utility to the City of Elizabethtown.
s (environmental engineer) exploring the possibility of using Peracetic Acid for disinfection. Charlie Roth at the Lou

vided the City Attorney with information about 2 types of funding that would be available for the City so they could ha
e responsibility for this system and connect it to the City sewers.
ication to abandon. The City of Elizabethtown would hopefully then take over this facility and connect to the city trur
ndon this facility. In addition Airview is working with the City of Elizabethtown to get the City to take over this systen
s system.The DOW is assisting in this endeavor.
work with the City of Elizabethtown to get the city to take over this utility.
on a regional system. Airview continues to work toward compliance.

nt of this facility. And continues to work with the City of Elizabethtown to get them to work with Airview to approve th
ned to clean it out. Airview continues to try an work with the local Hardin County and Elizabethtown municipalities to
the access to the chlorine contact tank. Note: This is a very difficult place to get to. Eventually service men we ab
nce. Also, Airview Utilities continues to work with the City of Elizabethtown to get the City to take over this system.
plant at times was very heavy.
g has now thawed out and all equipment is back in service.
air lift sludge return was torn up and had to be rebuilt. The disinfection equipment was also damaged and had to be
the chlorine contact tank. So it was necessary to plug that pipe where it enters the CCT. The lagoon is out of serv
difficult to do with the I/I this system receives. Airview, with the help of its attorney, continues to try and get the City
tood that the DOW is trying help in this also.

design modifications to the treatment plant or the design of a new plant which would be submitted for approval to the
g the City to take this system. Continued efforts would be appreciated.

ect it to their trunck line. This treatment plant is old/outdated and the chlorine contact tank is in a location that it is im

the local municipalities to take this facility over and connect the Airview subdivision sewers to a trunk line and elimin
din County to get this system connected to the City or County trunk line so this very old plant can be taken off line.
t was just in the last two weeks that the operator discovered that there was a leak in the lagoon transfer pipe and it w
been trying for quite sometime to get one of the local agencies to take this plant and connect to their trunk line. Lat

able to pay the electric, water, lab expenses and chemical bills. Airview has filed with the PSC to surrender and aba
ns, on the best way to bring it into compliance. The major problem is the location of the chlorine contact and its cond
e purpose of the City assuming the responsibility of the utility and getting it connected to the City sewer system. Air
that needs to be cleaned out. But it is impossible to get to with a vacuum truck. Also, many of the residents don't p
o note that every effort is being made to properly operate this plant and bring it into compliance. But due to the age
own why it was ever approved to placed where it is. Also note that Airview Utilities continues discussions with the C
very effort to bring this plant into compliance. It is an aged plant, far beyond its useful life and cash flow is a major p
it is very difficult to achieve compliance. But will continue to work to that goal.Airview continues to communicate wi
renovation has been completed of all drops, including the replacement of all course bubble diffusers. With th
nuary 28th, 2016 because I had requested DCA assistance in bringing the plant into compliance.In addition I continu
e years ago and connected to a regional system. Airview Utilities has made application to the Public Service Comm
is system. The DOW is helping in this matter.
on that is impossible to reach. But Airview Utilities is trying very hard to properly operate this facility. Airview contin
Elizabethtown to get the City to take over this utility. Increased help from the DOW would be appreciated.
es and equipment that wouldn't run it was very difficult to meet the permit limits. All equipment is back in service an
is system. The DOW is working with Airview also to encourage the City to take it.
City of Elizabethtown for Airview to transfer this utility to the City. Of course the intent is for the plant to be eliminate
cause of its location it is impossible to get to with a tank truck to clean it out. on going efforts are being made to get
l of this facility. The DOW is helping in this matter also.
uest to transfer this utility to the City of Elizabethtown.
s (environmental engineer) exploring the possibility of using Peracetic Acid for disinfection. Charlie Roth at the Lou

vided the City Attorney with information about 2 types of funding that would be available for the City so they could ha
e responsibility for this system and connect it to the City sewers.
ication to abandon. The City of Elizabethtown would hopefully then take over this facility and connect to the city trur
ndon this facility. In addition Airview is working with the City of Elizabethtown to get the City to take over this systen
s system.The DOW is assisting in this endeavor.
work with the City of Elizabethtown to get the city to take over this utility.
on a regional system. Airview continues to work toward compliance.

nt of this facility. And continues to work with the City of Elizabethtown to get them to work with Airview to approve th
ned to clean it out. Airview continues to try an work with the local Hardin County and Elizabethtown municipalities to
the access to the chlorine contact tank. Note: This is a very difficult place to get to. Eventually service men we ab
nce. Also, Airview Utilities continues to work with the City of Elizabethtown to get the City to take over this system.
plant at times was very heavy.
g has now thawed out and all equipment is back in service.
air lift sludge return was torn up and had to be rebuilt. The disinfection equipment was also damaged and had to be
the chlorine contact tank. So it was necessary to plug that pipe where it enters the CCT. The lagoon is out of serv
difficult to do with the I/I this system receives. Airview, with the help of its attorney, continues to try and get the City
tood that the DOW is trying help in this also.

design modifications to the treatment plant or the design of a new plant which would be submitted for approval to the
g the City to take this system. Continued efforts would be appreciated.

ect it to their trunck line. This treatment plant is old/outdated and the chlorine contact tank is in a location that it is im

the local municipalities to take this facility over and connect the Airview subdivision sewers to a trunk line and elimin
din County to get this system connected to the City or County trunk line so this very old plant can be taken off line.
t was just in the last two weeks that the operator discovered that there was a leak in the lagoon transfer pipe and it w
been trying for quite sometime to get one of the local agencies to take this plant and connect to their trunk line. Lat

able to pay the electric, water, lab expenses and chemical bills. Airview has filed with the PSC to surrender and aba
ns, on the best way to bring it into compliance. The major problem is the location of the chlorine contact and its cond
e purpose of the City assuming the responsibility of the utility and getting it connected to the City sewer system. Air
that needs to be cleaned out. But it is impossible to get to with a vacuum truck. Also, many of the residents don't p
o note that every effort is being made to properly operate this plant and bring it into compliance. But due to the age
own why it was ever approved to placed where it is. Also note that Airview Utilities continues discussions with the C
very effort to bring this plant into compliance. It is an aged plant, far beyond its useful life and cash flow is a major p
it is very difficult to achieve compliance. But will continue to work to that goal.Airview continues to communicate wi
renovation has been completed of all drops, including the replacement of all course bubble diffusers. With th
nuary 28th, 2016 because I had requested DCA assistance in bringing the plant into compliance.In addition I continu
e years ago and connected to a regional system. Airview Utilities has made application to the Public Service Comm
is system. The DOW is helping in this matter.
on that is impossible to reach. But Airview Utilities is trying very hard to properly operate this facility. Airview contin
Elizabethtown to get the City to take over this utility. Increased help from the DOW would be appreciated.
es and equipment that wouldn't run it was very difficult to meet the permit limits. All equipment is back in service an
is system. The DOW is working with Airview also to encourage the City to take it.
City of Elizabethtown for Airview to transfer this utility to the City. Of course the intent is for the plant to be eliminate
cause of its location it is impossible to get to with a tank truck to clean it out. on going efforts are being made to get
l of this facility. The DOW is helping in this matter also.
uest to transfer this utility to the City of Elizabethtown.
s (environmental engineer) exploring the possibility of using Peracetic Acid for disinfection. Charlie Roth at the Lou

e responsibility for this system and connect it to the City sewers.
s system.The DOW is assisting in this endeavor.
on a regional system. Airview continues to work toward compliance.
nt of this facility. And continues to work with the City of Elizabethtown to get them to work with Airview to approve th
the access to the chlorine contact tank. Note: This is a very difficult place to get to. Eventually service men we ab
plant at times was very heavy.
air lift sludge return was torn up and had to be rebuilt. The disinfection equipment was also damaged and had to be
difficult to do with the I/I this system receives. Airview, with the help of its attorney, continues to try and get the City
tood that the DOW is trying help in this also.
design modifications to the treatment plant or the design of a new plant which would be submitted for approval to the

din County to get this system connected to the City or County trunk line so this very old plant can be taken off line.
been trying for quite sometime to get one of the local agencies to take this plant and connect to their trunk line. Lat
e purpose of the City assuming the responsibility of the utility and getting it connected to the City sewer system. Air
that needs to be cleaned out. But it is impossible to get to with a vacuum truck. Also, many of the residents don't
o note that every effort is being made to properly operate this plant and bring it into compliance. But due to the age
own why it was ever approved to placed where it is. Also note that Airview Utilities continues discussions with the C
very effort to bring this plant into compliance. It is an aged plant, far beyond its useful life and cash flow is a major
renovation has been completed of all drops, including the replacement of all course bubble diffusers. With th
e years ago and connected to a regional system. Airview Utilities has made application to the Public Service Comm
is system. The DOW is helping in this matter.
on that is impossible to reach. But Airview Utilities is trying very hard to properly operate this facility. Airview contin
is system. The DOW is working with Airview also to encourage the City to take it.
cause of its location it is impossible to get to with a tank truck to clean it out. on going efforts are being made to get
of this facility. The DOW is helping in this matter also.

e responsibility for this system and connect it to the City sewers.
s system.The DOW is assisting in this endeavor.
on a regional system. Airview continues to work toward compliance.
nt of this facility. And continues to work with the City of Elizabethtown to get them to work with Airview to approve th
the access to the chlorine contact tank. Note: This is a very difficult place to get to. Eventually service men we ab
plant at times was very heavy.
air lift sludge return was torn up and had to be rebuilt. The disinfection equipment was also damaged and had to be
difficult to do with the I/I this system receives. Airview, with the help of its attorney, continues to try and get the City
tood that the DOW is trying help in this also.
design modifications to the treatment plant or the design of a new plant which would be submitted for approval to the

din County to get this system connected to the City or County trunk line so this very old plant can be taken off line.
been trying for quite sometime to get one of the local agencies to take this plant and connect to their trunk line. Lat
e purpose of the City assuming the responsibility of the utility and getting it connected to the City sewer system. Air
that needs to be cleaned out. But it is impossible to get to with a vacuum truck. Also, many of the residents don't
o note that every effort is being made to properly operate this plant and bring it into compliance. But due to the age
own why it was ever approved to placed where it is. Also note that Airview Utilities continues discussions with the C
very effort to bring this plant into compliance. It is an aged plant, far beyond its useful life and cash flow is a major
renovation has been completed of all drops, including the replacement of all course bubble diffusers. With th
e years ago and connected to a regional system. Airview Utilities has made application to the Public Service Comm
is system. The DOW is helping in this matter.
on that is impossible to reach. But Airview Utilities is trying very hard to properly operate this facility. Airview contin
is system. The DOW is working with Airview also to encourage the City to take it.
cause of its location it is impossible to get to with a tank truck to clean it out. on going efforts are being made to get

l of this facility. The DOW is helping in this matter also.

e responsibility for this system and connect it to the City sewers.
s system.The DOW is assisting in this endeavor.
on a regional system. Airview continues to work toward compliance.
nt of this facility. And continues to work with the City of Elizabethtown to get them to work with Airview to approve th
l the access to the chlorine contact tank. Note: This is a very difficult place to get to. Eventually service men we ab
plant at times was very heavy.
air lift sludge return was torn up and had to be rebuilt. The disinfection equipment was also damaged and had to be
difficult to do with the I/I this system receives. Airview, with the help of its attorney, continues to try and get the City
tood that the DOW is trying help in this also.
design modifications to the treatment plant or the design of a new plant which would be submitted for approval to the

din County to get this system connected to the City or County trunk line so this very old plant can be taken off line.
been trying for quite sometime to get one of the local agencies to take this plant and connect to their trunk line. Lat
e purpose of the City assuming the responsibility of the utility and getting it connected to the City sewer system. Air
t that needs to be cleaned out. But it is impossible to get to with a vacuum truck. Also, many of the residents don't
o note that every effort is being made to properly operate this plant and bring it into compliance. But due to the age
own why it was ever approved to placed where it is. Also note that Airview Utilities continues discussions with the C
very effort to bring this plant into compliance. It is an aged plant, far beyond its useful life and cash flow is a major
renovation has been completed of all drops, including the replacement of all course bubble diffusers. With th
e years ago and connected to a regional system. Airview Utilities has made application to the Public Service Comn
is system. The DOW is helping in this matter.
on that is impossible to reach. But Airview Utilities is trying very hard to properly operate this facility. Airview contin
is system. The DOW is working with Airview also to encourage the City to take it.
ause of its location it is impossible to get to with a tank truck to clean it out. on going efforts are being made to get
l of this facility. The DOW is helping in this matter also.

e responsibility for this system and connect it to the City sewers.
s system.The DOW is assisting in this endeavor.
on a regional system. Airview continues to work toward compliance.
nt of this facility. And continues to work with the City of Elizabethtown to get them to work with Airview to approve th
l the access to the chlorine contact tank. Note: This is a very difficult place to get to. Eventually service men we ab
plant at times was very heavy.
air lift sludge return was torn up and had to be rebuilt. The disinfection equipment was also damaged and had to be
difficult to do with the I/I this system receives. Airview, with the help of its attorney, continues to try and get the City
tood that the DOW is trying help in this also.
design modifications to the treatment plant or the design of a new plant which would be submitted for approval to the

din County to get this system connected to the City or County trunk line so this very old plant can be taken off line.
been trying for quite sometime to get one of the local agencies to take this plant and connect to their trunk line. Lat
e purpose of the City assuming the responsibility of the utility and getting it connected to the City sewer system. Air
t that needs to be cleaned out. But it is impossible to get to with a vacuum truck. Also, many of the residents don't
o note that every effort is being made to properly operate this plant and bring it into compliance. But due to the age
own why it was ever approved to placed where it is. Also note that Airview Utilities continues discussions with the C
very effort to bring this plant into compliance. It is an aged plant, far beyond its useful life and cash flow is a major
renovation has been completed of all drops, including the replacement of all course bubble diffusers. With th
e years ago and connected to a regional system. Airview Utilities has made application to the Public Service Comn
is system. The DOW is helping in this matter.
on that is impossible to reach. But Airview Utilities is trying very hard to properly operate this facility. Airview contin
is system. The DOW is working with Airview also to encourage the City to take it.

:ause of its location it is impossible to get to with a tank truck to clean it out. on going efforts are being made to get
l of this facility. The DOW is helping in this matter also.

vided the City Attorney with information about 2 types of funding that would be available for the City so they could ha
ication to abandon. The City of Elizabethtown would hopefully then take over this facility and connect to the city trur
ndon this facility. In addition Airview is working with the City of Elizabethtown to get the City to take over this systen
work with the City of Elizabethtown to get the city to take over this utility.

ıed to clean it out. Airview continues to try an work with the local Hardin County and Elizabethtown municipalities to
ıce. Also, Airview Utilities continues to work with the City of Elizabethtown to get the City to take over this system.
g has now thawed out and all equipment is back in service.
the chlorine contact tank. So it was necessary to plug that pipe where it enters the CCT. The lagoon is out of serv

g the City to take this system. Continued efforts would be appreciated.

ect it to their trunck line. This treatment plant is old/outdated and the chlorine contact tank is in a location that it is im
the local municipalities to take this facility over and connect the Airview subdivision sewers to a trunk line and elimir
t was just in the last two weeks that the operator discovered that there was a leak in the lagoon transfer pipe and it v

able to pay the electric, water, lab expenses and chemical bills. Airview has filed with the PSC to surrender and aba
ns, on the best way to bring it into compliance. The major problem is the location of the chlorine contact and its cone
it is very difficult to achieve compliance. But will continue to work to that goal.Airview continues to communicate wi
nuary 28th, 2016 because I had requested DCA assistance in bringing the plant into compliance.In addition I continu
Elizabethtown to get the City to take over this utility. Increased help from the DOW would be appreciated.
es and equipment that wouldn't run it was very difficult to meet the permit limits. All equipment is back in service an
City of Elizabethtown for Airview to transfer this utility to the City. Of course the intent is for the plant to be eliminate
uest to transfer this utility to the City of Elizabethtown.
s (environmental engineer) exploring the possibility of using Peracetic Acid for disinfection. Charlie Roth at the Lou

vided the City Attorney with information about 2 types of funding that would be available for the City so they could ha
ication to abandon. The City of Elizabethtown would hopefully then take over this facility and connect to the city trur
ndon this facility. In addition Airview is working with the City of Elizabethtown to get the City to take over this systen
work with the City of Elizabethtown to get the city to take over this utility.

ıed to clean it out. Airview continues to try an work with the local Hardin County and Elizabethtown municipalities to
ıce. Also, Airview Utilities continues to work with the City of Elizabethtown to get the City to take over this system.
g has now thawed out and all equipment is back in service.
the chlorine contact tank. So it was necessary to plug that pipe where it enters the CCT. The lagoon is out of serv

g the City to take this system. Continued efforts would be appreciated.

ect it to their trunck line. This treatment plant is old/outdated and the chlorine contact tank is in a location that it is im
the local municipalities to take this facility over and connect the Airview subdivision sewers to a trunk line and elimir
t was just in the last two weeks that the operator discovered that there was a leak in the lagoon transfer pipe and it v

able to pay the electric, water, lab expenses and chemical bills. Airview has filed with the PSC to surrender and aba
ns, on the best way to bring it into compliance. The major problem is the location of the chlorine contact and its cone
it is very difficult to achieve compliance. But will continue to work to that goal.Airview continues to communicate wi
nuary 28th, 2016 because I had requested DCA assistance in bringing the plant into compliance.In addition I continu
Elizabethtown to get the City to take over this utility. Increased help from the DOW would be appreciated.
es and equipment that wouldn't run it was very difficult to meet the permit limits. All equipment is back in service an

City of Elizabethtown for Airview to transfer this utility to the City. Of course the intent is for the plant to be eliminate
uest to transfer this utility to the City of Elizabethtown.
s (environmental engineer) exploring the possibility of using Peracetic Acid for disinfection. Charlie Roth at the Lou

vided the City Attorney with information about 2 types of funding that would be available for the City so they could ha
ication to abandon. The City of Elizabethtown would hopefully then take over this facility and connect to the city trur
ndon this facility. In addition Airview is working with the City of Elizabethtown to get the City to take over this systen
work with the City of Elizabethtown to get the city to take over this utility.

ued to clean it out. Airview continues to try an work with the local Hardin County and Elizabethtown municipalities to
ice. Also, Airview Utilities continues to work with the City of Elizabethtown to get the City to take over this system.
g has now thawed out and all equipment is back in service.
the chlorine contact tank. So it was necessary to plug that pipe where it enters the CCT. The lagoon is out of serv

g the City to take this system. Continued efforts would be appreciated.

ect it to their trunck line. This treatment plant is old/outdated and the chlorine contact tank is in a location that it is im
the local municipalities to take this facility over and connect the Airview subdivision sewers to a trunk line and elimi
t was just in the last two weeks that the operator discovered that there was a leak in the lagoon transfer pipe and it v

able to pay the electric, water, lab expenses and chemical bills. Airview has filed with the PSC to surrender and aba
ns, on the best way to bring it into compliance. The major problem is the location of the chlorine contact and its con
it is very difficult to achieve compliance. But will continue to work to that goal.Airview continues to communicate wi
nuary 28th, 2016 because I had requested DCA assistance in bringing the plant into compliance.In addition I continu
Elizabethtown to get the City to take over this utility. Increased help from the DOW would be appreciated.
es and equipment that wouldn't run it was very difficult to meet the permit limits. All equipment is back in service an
City of Elizabethtown for Airview to transfer this utility to the City. Of course the intent is for the plant to be eliminate
uest to transfer this utility to the City of Elizabethtown.
s (environmental engineer) exploring the possibility of using Peracetic Acid for disinfection. Charlie Roth at the Lou

vided the City Attorney with information about 2 types of funding that would be available for the City so they could ha
ication to abandon. The City of Elizabethtown would hopefully then take over this facility and connect to the city trur
ndon this facility. In addition Airview is working with the City of Elizabethtown to get the City to take over this systen
work with the City of Elizabethtown to get the city to take over this utility.

ued to clean it out. Airview continues to try an work with the local Hardin County and Elizabethtown municipalities to
ice. Also, Airview Utilities continues to work with the City of Elizabethtown to get the City to take over this system.
g has now thawed out and all equipment is back in service.
the chlorine contact tank. So it was necessary to plug that pipe where it enters the CCT. The lagoon is out of serv

g the City to take this system. Continued efforts would be appreciated.

ect it to their trunck line. This treatment plant is old/outdated and the chlorine contact tank is in a location that it is im
the local municipalities to take this facility over and connect the Airview subdivision sewers to a trunk line and elimi
t was just in the last two weeks that the operator discovered that there was a leak in the lagoon transfer pipe and it v

able to pay the electric, water, lab expenses and chemical bills. Airview has filed with the PSC to surrender and aba
ns, on the best way to bring it into compliance. The major problem is the location of the chlorine contact and its con
it is very difficult to achieve compliance. But will continue to work to that goal.Airview continues to communicate wi
nuary 28th, 2016 because I had requested DCA assistance in bringing the plant into compliance.In addition I continu
Elizabethtown to get the City to take over this utility. Increased help from the DOW would be appreciated.

es and equipment that wouldn't run it was very difficult to meet the permit limits. All equipment is back in service an
City of Elizabethtown for Airview to transfer this utility to the City. Of course the intent is for the plant to be eliminate
uest to transfer this utility to the City of Elizabethtown.
s (environmental engineer) exploring the possibility of using Peracetic Acid for disinfection. Charlie Roth at the Lou

vided the City Attorney with information about 2 types of funding that would be available for the City so they could ha
e responsibility for this system and connect it to the City sewers.
ication to abandon. The City of Elizabethtown would hopefully then take over this facility and connect to the city trur
ndon this facility. In addition Airview is working with the City of Elizabethtown to get the City to take over this systen
s system.The DOW is assisting in this endeavor.
work with the City of Elizabethtown to get the city to take over this utility.
on a regional system. Airview continues to work toward compliance.

nt of this facility. And continues to work with the City of Elizabethtown to get them to work with Airview to approve th
ed to clean it out. Airview continues to try an work with the local Hardin County and Elizabethtown municipalities to
the access to the chlorine contact tank. Note: This is a very difficult place to get to. Eventually service men we ab
ce. Also, Airview Utilities continues to work with the City of Elizabethtown to get the City to take over this system.
plant at times was very heavy.
g has now thawed out and all equipment is back in service.
air lift sludge return was torn up and had to be rebuilt. The disinfection equipment was also damaged and had to be
the chlorine contact tank. So it was necessary to plug that pipe where it enters the CCT. The lagoon is out of serv
difficult to do with the I/I this system receives. Airview, with the help of its attorney, continues to try and get the City
tood that the DOW is trying help in this also.

design modifications to the treatment plant or the design of a new plant which would be submitted for approval to the
g the City to take this system. Continued efforts would be appreciated.

ct it to their trunck line. This treatment plant is old/outdated and the chlorine contact tank is in a location that it is im

the local municipalities to take this facility over and connect the Airview subdivision sewers to a trunk line and elimin
din County to get this system connected to the City or County trunk line so this very old plant can be taken off line.
t was just in the last two weeks that the operator discovered that there was a leak in the lagoon transfer pipe and it w
been trying for quite sometime to get one of the local agencies to take this plant and connect to their trunk line. Lat

able to pay the electric, water, lab expenses and chemical bills. Airview has filed with the PSC to surrender and aba
ns, on the best way to bring it into compliance. The major problem is the location of the chlorine contact and its cond
e purpose of the City assuming the responsibility of the utility and getting it connected to the City sewer system. Air
that needs to be cleaned out. But it is impossible to get to with a vacuum truck. Also, many of the residents don't
o note that every effort is being made to properly operate this plant and bring it into compliance. But due to the age
own why it was ever approved to placed where it is. Also note that Airview Utilities continues discussions with the C
very effort to bring this plant into compliance. It is an aged plant, far beyond its useful life and cash flow is a major
it is very difficult to achieve compliance. But will continue to work to that goal.Airview continues to communicate wi
renovation has been completed of all drops, including the replacement of all course bubble diffusers. With th
nuary 28th, 2016 because I had requested DCA assistance in bringing the plant into compliance.In addition I continu
e years ago and connected to a regional system. Airview Utilities has made application to the Public Service Comm
is system. The DOW is helping in this matter.
on that is impossible to reach. But Airview Utilities is trying very hard to properly operate this facility. Airview contin
Elizabethtown to get the City to take over this utility. Increased help from the DOW would be appreciated.
es and equipment that wouldn't run it was very difficult to meet the permit limits. All equipment is back in service an
is system. The DOW is working with Airview also to encourage the City to take it.
City of Elizabethtown for Airview to transfer this utility to the City. Of course the intent is for the plant to be eliminate

:ause of its location it is impossible to get to with a tank truck to clean it out. on going efforts are being made to get
l of this facility. The DOW is helping in this matter also.
uest to transfer this utility to the City of Elizabethtown.
:s (environmental engineer) exploring the possibility of using Peracetic Acid for disinfection. Charlie Roth at the Lou

vided the City Attorney with information about 2 types of funding that would be available for the City so they could ha
e responsibility for this system and connect it to the City sewers.
ication to abandon. The City of Elizabethtown would hopefully then take over this facility and connect to the city trur
ndon this facility. In addition Airview is working with the City of Elizabethtown to get the City to take over this systen
s system.The DOW is assisting in this endeavor.
work with the City of Elizabethtown to get the city to take over this utility.
on a regional system. Airview continues to work toward compliance.

nt of this facility. And continues to work with the City of Elizabethtown to get them to work with Airview to approve th
ied to clean it out. Airview continues to try an work with the local Hardin County and Elizabethtown municipalities to
the access to the chlorine contact tank. Note: This is a very difficult place to get to. Eventually service men we ab
ice. Also, Airview Utilities continues to work with the City of Elizabethtown to get the City to take over this system.
plant at times was very heavy.
g has now thawed out and all equipment is back in service.
air lift sludge return was torn up and had to be rebuilt. The disinfection equipment was also damaged and had to be
the chlorine contact tank. So it was necessary to plug that pipe where it enters the CCT. The lagoon is out of serv
difficult to do with the I/I this system receives. Airview, with the help of its attorney, continues to try and get the City
tood that the DOW is trying help in this also.

design modifications to the treatment plant or the design of a new plant which would be submitted for approval to the
g the City to take this system. Continued efforts would be appreciated.

ect it to their trunck line. This treatment plant is old/outdated and the chlorine contact tank is in a location that it is im

the local municipalities to take this facility over and connect the Airview subdivision sewers to a trunk line and elimin
din County to get this system connected to the City or County trunk line so this very old plant can be taken off line.
t was just in the last two weeks that the operator discovered that there was a leak in the lagoon transfer pipe and it v
been trying for quite sometime to get one of the local agencies to take this plant and connect to their trunk line. Lat

able to pay the electric, water, lab expenses and chemical bills. Airview has filed with the PSC to surrender and aba
ns, on the best way to bring it into compliance. The major problem is the location of the chlorine contact and its cond
e purpose of the City assuming the responsibility of the utility and getting it connected to the City sewer system. Air
: that needs to be cleaned out. But it is impossible to get to with a vacuum truck. Also, many of the residents don't
o note that every effort is being made to properly operate this plant and bring it into compliance. But due to the age
own why it was ever approved to placed where it is. Also note that Airview Utilities continues discussions with the C
very effort to bring this plant into compliance. It is an aged plant, far beyond its useful life and cash flow is a major
it is very difficult to achieve compliance. But will continue to work to that goal.Airview continues to communicate wi
renovation has been completed of all drops, including the replacement of all course bubble diffusers. With th
nuary 28th, 2016 because I had requested DCA assistance in bringing the plant into compliance.In addition I continu
e years ago and connected to a regional system. Airview Utilities has made application to the Public Service Comn
is system. The DOW is helping in this matter.
on that is impossible to reach. But Airview Utilities is trying very hard to properly operate this facility. Airview contin
Elizabethtown to get the City to take over this utility. Increased help from the DOW would be appreciated.
es and equipment that wouldn't run it was very difficult to meet the permit limits. All equipment is back in service an
is system. The DOW is working with Airview also to encourage the City to take it.
City of Elizabethtown for Airview to transfer this utility to the City. Of course the intent is for the plant to be eliminate

:ause of its location it is impossible to get to with a tank truck to clean it out. on going efforts are being made to get
l of this facility. The DOW is helping in this matter also.
uest to transfer this utility to the City of Elizabethtown.
:s (environmental engineer) exploring the possibility of using Peracetic Acid for disinfection. Charlie Roth at the Lou

vided the City Attorney with information about 2 types of funding that would be available for the City so they could ha
e responsibility for this system and connect it to the City sewers.
ication to abandon. The City of Elizabethtown would hopefully then take over this facility and connect to the city trur
ndon this facility. In addition Airview is working with the City of Elizabethtown to get the City to take over this systen
s system.The DOW is assisting in this endeavor.
work with the City of Elizabethtown to get the city to take over this utility.
on a regional system. Airview continues to work toward compliance.

nt of this facility. And continues to work with the City of Elizabethtown to get them to work with Airview to approve th
ied to clean it out. Airview continues to try an work with the local Hardin County and Elizabethtown municipalities to
the access to the chlorine contact tank. Note: This is a very difficult place to get to. Eventually service men we ab
ice. Also, Airview Utilities continues to work with the City of Elizabethtown to get the City to take over this system.
plant at times was very heavy.
g has now thawed out and all equipment is back in service.
air lift sludge return was torn up and had to be rebuilt. The disinfection equipment was also damaged and had to be
the chlorine contact tank. So it was necessary to plug that pipe where it enters the CCT. The lagoon is out of serv
difficult to do with the I/I this system receives. Airview, with the help of its attorney, continues to try and get the City
tood that the DOW is trying help in this also.

design modifications to the treatment plant or the design of a new plant which would be submitted for approval to the
g the City to take this system. Continued efforts would be appreciated.

ect it to their trunck line. This treatment plant is old/outdated and the chlorine contact tank is in a location that it is im

the local municipalities to take this facility over and connect the Airview subdivision sewers to a trunk line and elimin
din County to get this system connected to the City or County trunk line so this very old plant can be taken off line.
t was just in the last two weeks that the operator discovered that there was a leak in the lagoon transfer pipe and it v
been trying for quite sometime to get one of the local agencies to take this plant and connect to their trunk line. Lat

able to pay the electric, water, lab expenses and chemical bills. Airview has filed with the PSC to surrender and aba
ns, on the best way to bring it into compliance. The major problem is the location of the chlorine contact and its cond
e purpose of the City assuming the responsibility of the utility and getting it connected to the City sewer system. Air
: that needs to be cleaned out. But it is impossible to get to with a vacuum truck. Also, many of the residents don't
o note that every effort is being made to properly operate this plant and bring it into compliance. But due to the age
own why it was ever approved to placed where it is. Also note that Airview Utilities continues discussions with the C
very effort to bring this plant into compliance. It is an aged plant, far beyond its useful life and cash flow is a major
it is very difficult to achieve compliance. But will continue to work to that goal.Airview continues to communicate wi
renovation has been completed of all drops, including the replacement of all course bubble diffusers. With th
nuary 28th, 2016 because I had requested DCA assistance in bringing the plant into compliance.In addition I continu
e years ago and connected to a regional system. Airview Utilities has made application to the Public Service Comn
is system. The DOW is helping in this matter.
on that is impossible to reach. But Airview Utilities is trying very hard to properly operate this facility. Airview contin
Elizabethtown to get the City to take over this utility. Increased help from the DOW would be appreciated.
es and equipment that wouldn't run it was very difficult to meet the permit limits. All equipment is back in service an
is system. The DOW is working with Airview also to encourage the City to take it.
City of Elizabethtown for Airview to transfer this utility to the City. Of course the intent is for the plant to be eliminate

:ause of its location it is impossible to get to with a tank truck to clean it out. on going efforts are being made to get
l of this facility. The DOW is helping in this matter also.
uest to transfer this utility to the City of Elizabethtown.
:s (environmental engineer) exploring the possibility of using Peracetic Acid for disinfection. Charlie Roth at the Lou

vided the City Attorney with information about 2 types of funding that would be available for the City so they could ha
e responsibility for this system and connect it to the City sewers.
ication to abandon. The City of Elizabethtown would hopefully then take over this facility and connect to the city trur
ndon this facility. In addition Airview is working with the City of Elizabethtown to get the City to take over this systen
s system.The DOW is assisting in this endeavor.
work with the City of Elizabethtown to get the city to take over this utility.
on a regional system. Airview continues to work toward compliance.

nt of this facility. And continues to work with the City of Elizabethtown to get them to work with Airview to approve th
ied to clean it out. Airview continues to try an work with the local Hardin County and Elizabethtown municipalities to
the access to the chlorine contact tank. Note: This is a very difficult place to get to. Eventually service men we ab
ice. Also, Airview Utilities continues to work with the City of Elizabethtown to get the City to take over this system.
plant at times was very heavy.
g has now thawed out and all equipment is back in service.
air lift sludge return was torn up and had to be rebuilt. The disinfection equipment was also damaged and had to be
the chlorine contact tank. So it was necessary to plug that pipe where it enters the CCT. The lagoon is out of serv
difficult to do with the I/I this system receives. Airview, with the help of its attorney, continues to try and get the City
tood that the DOW is trying help in this also.

design modifications to the treatment plant or the design of a new plant which would be submitted for approval to the
g the City to take this system. Continued efforts would be appreciated.

ect it to their trunck line. This treatment plant is old/outdated and the chlorine contact tank is in a location that it is im

the local municipalities to take this facility over and connect the Airview subdivision sewers to a trunk line and elimin
din County to get this system connected to the City or County trunk line so this very old plant can be taken off line.
t was just in the last two weeks that the operator discovered that there was a leak in the lagoon transfer pipe and it v
been trying for quite sometime to get one of the local agencies to take this plant and connect to their trunk line. Lat

able to pay the electric, water, lab expenses and chemical bills. Airview has filed with the PSC to surrender and aba
ns, on the best way to bring it into compliance. The major problem is the location of the chlorine contact and its cond
e purpose of the City assuming the responsibility of the utility and getting it connected to the City sewer system. Air
: that needs to be cleaned out. But it is impossible to get to with a vacuum truck. Also, many of the residents don't
o note that every effort is being made to properly operate this plant and bring it into compliance. But due to the age
own why it was ever approved to placed where it is. Also note that Airview Utilities continues discussions with the C
very effort to bring this plant into compliance. It is an aged plant, far beyond its useful life and cash flow is a major
it is very difficult to achieve compliance. But will continue to work to that goal.Airview continues to communicate wi
renovation has been completed of all drops, including the replacement of all course bubble diffusers. With th
nuary 28th, 2016 because I had requested DCA assistance in bringing the plant into compliance.In addition I continu
e years ago and connected to a regional system. Airview Utilities has made application to the Public Service Comn
is system. The DOW is helping in this matter.
on that is impossible to reach. But Airview Utilities is trying very hard to properly operate this facility. Airview contin
Elizabethtown to get the City to take over this utility. Increased help from the DOW would be appreciated.
es and equipment that wouldn't run it was very difficult to meet the permit limits. All equipment is back in service an
is system. The DOW is working with Airview also to encourage the City to take it.
City of Elizabethtown for Airview to transfer this utility to the City. Of course the intent is for the plant to be eliminate

:ause of its location it is impossible to get to with a tank truck to clean it out. on going efforts are being made to get
l of this facility. The DOW is helping in this matter also.
uest to transfer this utility to the City of Elizabethtown.
:s (environmental engineer) exploring the possibility of using Peracetic Acid for disinfection. Charlie Roth at the Lou

vided the City Attorney with information about 2 types of funding that would be available for the City so they could ha
e responsibility for this system and connect it to the City sewers.
ication to abandon. The City of Elizabethtown would hopefully then take over this facility and connect to the city trur
ndon this facility. In addition Airview is working with the City of Elizabethtown to get the City to take over this systen
s system.The DOW is assisting in this endeavor.
work with the City of Elizabethtown to get the city to take over this utility.
on a regional system. Airview continues to work toward compliance.

nt of this facility. And continues to work with the City of Elizabethtown to get them to work with Airview to approve th
ied to clean it out. Airview continues to try an work with the local Hardin County and Elizabethtown municipalities to
the access to the chlorine contact tank. Note: This is a very difficult place to get to. Eventually service men we ab
ice. Also, Airview Utilities continues to work with the City of Elizabethtown to get the City to take over this system.
plant at times was very heavy.
g has now thawed out and all equipment is back in service.
air lift sludge return was torn up and had to be rebuilt. The disinfection equipment was also damaged and had to be
the chlorine contact tank. So it was necessary to plug that pipe where it enters the CCT. The lagoon is out of serv
difficult to do with the I/I this system receives. Airview, with the help of its attorney, continues to try and get the City
tood that the DOW is trying help in this also.

design modifications to the treatment plant or the design of a new plant which would be submitted for approval to the
g the City to take this system. Continued efforts would be appreciated.

ect it to their trunck line. This treatment plant is old/outdated and the chlorine contact tank is in a location that it is im

the local municipalities to take this facility over and connect the Airview subdivision sewers to a trunk line and elimin
din County to get this system connected to the City or County trunk line so this very old plant can be taken off line.
t was just in the last two weeks that the operator discovered that there was a leak in the lagoon transfer pipe and it v
been trying for quite sometime to get one of the local agencies to take this plant and connect to their trunk line. Lat

able to pay the electric, water, lab expenses and chemical bills. Airview has filed with the PSC to surrender and aba
ns, on the best way to bring it into compliance. The major problem is the location of the chlorine contact and its cond
e purpose of the City assuming the responsibility of the utility and getting it connected to the City sewer system. Air
: that needs to be cleaned out. But it is impossible to get to with a vacuum truck. Also, many of the residents don't
o note that every effort is being made to properly operate this plant and bring it into compliance. But due to the age
own why it was ever approved to placed where it is. Also note that Airview Utilities continues discussions with the C
very effort to bring this plant into compliance. It is an aged plant, far beyond its useful life and cash flow is a major
it is very difficult to achieve compliance. But will continue to work to that goal.Airview continues to communicate wi
renovation has been completed of all drops, including the replacement of all course bubble diffusers. With th
nuary 28th, 2016 because I had requested DCA assistance in bringing the plant into compliance.In addition I continu
e years ago and connected to a regional system. Airview Utilities has made application to the Public Service Comn
is system. The DOW is helping in this matter.
on that is impossible to reach. But Airview Utilities is trying very hard to properly operate this facility. Airview contin
Elizabethtown to get the City to take over this utility. Increased help from the DOW would be appreciated.
es and equipment that wouldn't run it was very difficult to meet the permit limits. All equipment is back in service an
is system. The DOW is working with Airview also to encourage the City to take it.
City of Elizabethtown for Airview to transfer this utility to the City. Of course the intent is for the plant to be eliminate

:ause of its location it is impossible to get to with a tank truck to clean it out. on going efforts are being made to get
l of this facility. The DOW is helping in this matter also.
uest to transfer this utility to the City of Elizabethtown.
:s (environmental engineer) exploring the possibility of using Peracetic Acid for disinfection. Charlie Roth at the Lou

vided the City Attorney with information about 2 types of funding that would be available for the City so they could ha
e responsibility for this system and connect it to the City sewers.
ication to abandon. The City of Elizabethtown would hopefully then take over this facility and connect to the city trur
ndon this facility. In addition Airview is working with the City of Elizabethtown to get the City to take over this systen
s system.The DOW is assisting in this endeavor.
work with the City of Elizabethtown to get the city to take over this utility.
on a regional system. Airview continues to work toward compliance.

nt of this facility. And continues to work with the City of Elizabethtown to get them to work with Airview to approve th
ied to clean it out. Airview continues to try an work with the local Hardin County and Elizabethtown municipalities to
the access to the chlorine contact tank. Note: This is a very difficult place to get to. Eventually service men we ab
ice. Also, Airview Utilities continues to work with the City of Elizabethtown to get the City to take over this system.
plant at times was very heavy.
g has now thawed out and all equipment is back in service.
air lift sludge return was torn up and had to be rebuilt. The disinfection equipment was also damaged and had to be
the chlorine contact tank. So it was necessary to plug that pipe where it enters the CCT. The lagoon is out of serv
difficult to do with the I/I this system receives. Airview, with the help of its attorney, continues to try and get the City
tood that the DOW is trying help in this also.

design modifications to the treatment plant or the design of a new plant which would be submitted for approval to the
g the City to take this system. Continued efforts would be appreciated.

ect it to their trunck line. This treatment plant is old/outdated and the chlorine contact tank is in a location that it is im

the local municipalities to take this facility over and connect the Airview subdivision sewers to a trunk line and elimin
din County to get this system connected to the City or County trunk line so this very old plant can be taken off line.
t was just in the last two weeks that the operator discovered that there was a leak in the lagoon transfer pipe and it v
been trying for quite sometime to get one of the local agencies to take this plant and connect to their trunk line. Lat

able to pay the electric, water, lab expenses and chemical bills. Airview has filed with the PSC to surrender and aba
ns, on the best way to bring it into compliance. The major problem is the location of the chlorine contact and its cond
e purpose of the City assuming the responsibility of the utility and getting it connected to the City sewer system. Air
: that needs to be cleaned out. But it is impossible to get to with a vacuum truck. Also, many of the residents don't
o note that every effort is being made to properly operate this plant and bring it into compliance. But due to the age
own why it was ever approved to placed where it is. Also note that Airview Utilities continues discussions with the C
very effort to bring this plant into compliance. It is an aged plant, far beyond its useful life and cash flow is a major
it is very difficult to achieve compliance. But will continue to work to that goal.Airview continues to communicate wi
renovation has been completed of all drops, including the replacement of all course bubble diffusers. With th
nuary 28th, 2016 because I had requested DCA assistance in bringing the plant into compliance.In addition I continu
e years ago and connected to a regional system. Airview Utilities has made application to the Public Service Comn
is system. The DOW is helping in this matter.
on that is impossible to reach. But Airview Utilities is trying very hard to properly operate this facility. Airview contin
Elizabethtown to get the City to take over this utility. Increased help from the DOW would be appreciated.
es and equipment that wouldn't run it was very difficult to meet the permit limits. All equipment is back in service an
is system. The DOW is working with Airview also to encourage the City to take it.
City of Elizabethtown for Airview to transfer this utility to the City. Of course the intent is for the plant to be eliminate

:ause of its location it is impossible to get to with a tank truck to clean it out. on going efforts are being made to get
l of this facility. The DOW is helping in this matter also.
uest to transfer this utility to the City of Elizabethtown.
:s (environmental engineer) exploring the possibility of using Peracetic Acid for disinfection. Charlie Roth at the Lou

vided the City Attorney with information about 2 types of funding that would be available for the City so they could ha
e responsibility for this system and connect it to the City sewers.
ication to abandon. The City of Elizabethtown would hopefully then take over this facility and connect to the city trur
ndon this facility. In addition Airview is working with the City of Elizabethtown to get the City to take over this systen
s system.The DOW is assisting in this endeavor.
work with the City of Elizabethtown to get the city to take over this utility.
on a regional system. Airview continues to work toward compliance.

nt of this facility. And continues to work with the City of Elizabethtown to get them to work with Airview to approve th
ied to clean it out. Airview continues to try an work with the local Hardin County and Elizabethtown municipalities to
the access to the chlorine contact tank. Note: This is a very difficult place to get to. Eventually service men we ab
ice. Also, Airview Utilities continues to work with the City of Elizabethtown to get the City to take over this system.
plant at times was very heavy.
g has now thawed out and all equipment is back in service.
air lift sludge return was torn up and had to be rebuilt. The disinfection equipment was also damaged and had to be
the chlorine contact tank. So it was necessary to plug that pipe where it enters the CCT. The lagoon is out of serv
difficult to do with the I/I this system receives. Airview, with the help of its attorney, continues to try and get the City
tood that the DOW is trying help in this also.

design modifications to the treatment plant or the design of a new plant which would be submitted for approval to the
g the City to take this system. Continued efforts would be appreciated.

ect it to their trunck line. This treatment plant is old/outdated and the chlorine contact tank is in a location that it is im

the local municipalities to take this facility over and connect the Airview subdivision sewers to a trunk line and elimin
din County to get this system connected to the City or County trunk line so this very old plant can be taken off line.
t was just in the last two weeks that the operator discovered that there was a leak in the lagoon transfer pipe and it v
been trying for quite sometime to get one of the local agencies to take this plant and connect to their trunk line. Lat

able to pay the electric, water, lab expenses and chemical bills. Airview has filed with the PSC to surrender and aba
ns, on the best way to bring it into compliance. The major problem is the location of the chlorine contact and its cond
e purpose of the City assuming the responsibility of the utility and getting it connected to the City sewer system. Air
: that needs to be cleaned out. But it is impossible to get to with a vacuum truck. Also, many of the residents don't
o note that every effort is being made to properly operate this plant and bring it into compliance. But due to the age
own why it was ever approved to placed where it is. Also note that Airview Utilities continues discussions with the C
very effort to bring this plant into compliance. It is an aged plant, far beyond its useful life and cash flow is a major
it is very difficult to achieve compliance. But will continue to work to that goal.Airview continues to communicate wi
renovation has been completed of all drops, including the replacement of all course bubble diffusers. With th
nuary 28th, 2016 because I had requested DCA assistance in bringing the plant into compliance.In addition I continu
e years ago and connected to a regional system. Airview Utilities has made application to the Public Service Comn
is system. The DOW is helping in this matter.
on that is impossible to reach. But Airview Utilities is trying very hard to properly operate this facility. Airview contin
Elizabethtown to get the City to take over this utility. Increased help from the DOW would be appreciated.
es and equipment that wouldn't run it was very difficult to meet the permit limits. All equipment is back in service an
is system. The DOW is working with Airview also to encourage the City to take it.
City of Elizabethtown for Airview to transfer this utility to the City. Of course the intent is for the plant to be eliminate

:ause of its location it is impossible to get to with a tank truck to clean it out. on going efforts are being made to get
l of this facility. The DOW is helping in this matter also.
uest to transfer this utility to the City of Elizabethtown.
:s (environmental engineer) exploring the possibility of using Peracetic Acid for disinfection. Charlie Roth at the Lou

vided the City Attorney with information about 2 types of funding that would be available for the City so they could ha
e responsibility for this system and connect it to the City sewers.
ication to abandon. The City of Elizabethtown would hopefully then take over this facility and connect to the city trur
ndon this facility. In addition Airview is working with the City of Elizabethtown to get the City to take over this systen
s system.The DOW is assisting in this endeavor.
work with the City of Elizabethtown to get the city to take over this utility.
on a regional system. Airview continues to work toward compliance.

nt of this facility. And continues to work with the City of Elizabethtown to get them to work with Airview to approve th
ied to clean it out. Airview continues to try an work with the local Hardin County and Elizabethtown municipalities to
the access to the chlorine contact tank. Note: This is a very difficult place to get to. Eventually service men we ab
ice. Also, Airview Utilities continues to work with the City of Elizabethtown to get the City to take over this system.
plant at times was very heavy.
g has now thawed out and all equipment is back in service.
air lift sludge return was torn up and had to be rebuilt. The disinfection equipment was also damaged and had to be
the chlorine contact tank. So it was necessary to plug that pipe where it enters the CCT. The lagoon is out of serv
difficult to do with the I/I this system receives. Airview, with the help of its attorney, continues to try and get the City
tood that the DOW is trying help in this also.

design modifications to the treatment plant or the design of a new plant which would be submitted for approval to the
g the City to take this system. Continued efforts would be appreciated.

ect it to their trunck line. This treatment plant is old/outdated and the chlorine contact tank is in a location that it is im

the local municipalities to take this facility over and connect the Airview subdivision sewers to a trunk line and elimin
din County to get this system connected to the City or County trunk line so this very old plant can be taken off line.
t was just in the last two weeks that the operator discovered that there was a leak in the lagoon transfer pipe and it v
been trying for quite sometime to get one of the local agencies to take this plant and connect to their trunk line. Lat

able to pay the electric, water, lab expenses and chemical bills. Airview has filed with the PSC to surrender and aba
ns, on the best way to bring it into compliance. The major problem is the location of the chlorine contact and its cond
e purpose of the City assuming the responsibility of the utility and getting it connected to the City sewer system. Air
: that needs to be cleaned out. But it is impossible to get to with a vacuum truck. Also, many of the residents don't
o note that every effort is being made to properly operate this plant and bring it into compliance. But due to the age
own why it was ever approved to placed where it is. Also note that Airview Utilities continues discussions with the C
very effort to bring this plant into compliance. It is an aged plant, far beyond its useful life and cash flow is a major
it is very difficult to achieve compliance. But will continue to work to that goal.Airview continues to communicate wi
renovation has been completed of all drops, including the replacement of all course bubble diffusers. With th
nuary 28th, 2016 because I had requested DCA assistance in bringing the plant into compliance.In addition I continu
e years ago and connected to a regional system. Airview Utilities has made application to the Public Service Comn
is system. The DOW is helping in this matter.
on that is impossible to reach. But Airview Utilities is trying very hard to properly operate this facility. Airview contin
Elizabethtown to get the City to take over this utility. Increased help from the DOW would be appreciated.
es and equipment that wouldn't run it was very difficult to meet the permit limits. All equipment is back in service an
is system. The DOW is working with Airview also to encourage the City to take it.
City of Elizabethtown for Airview to transfer this utility to the City. Of course the intent is for the plant to be eliminate

:ause of its location it is impossible to get to with a tank truck to clean it out. on going efforts are being made to get
l of this facility. The DOW is helping in this matter also.
uest to transfer this utility to the City of Elizabethtown.
:s (environmental engineer) exploring the possibility of using Peracetic Acid for disinfection. Charlie Roth at the Lou

vided the City Attorney with information about 2 types of funding that would be available for the City so they could ha
e responsibility for this system and connect it to the City sewers.
ication to abandon. The City of Elizabethtown would hopefully then take over this facility and connect to the city trur
ndon this facility. In addition Airview is working with the City of Elizabethtown to get the City to take over this systen
s system.The DOW is assisting in this endeavor.
work with the City of Elizabethtown to get the city to take over this utility.
on a regional system. Airview continues to work toward compliance.

nt of this facility. And continues to work with the City of Elizabethtown to get them to work with Airview to approve th
ied to clean it out. Airview continues to try an work with the local Hardin County and Elizabethtown municipalities to
the access to the chlorine contact tank. Note: This is a very difficult place to get to. Eventually service men we ab
ice. Also, Airview Utilities continues to work with the City of Elizabethtown to get the City to take over this system.
plant at times was very heavy.
g has now thawed out and all equipment is back in service.
air lift sludge return was torn up and had to be rebuilt. The disinfection equipment was also damaged and had to be
the chlorine contact tank. So it was necessary to plug that pipe where it enters the CCT. The lagoon is out of serv
difficult to do with the I/I this system receives. Airview, with the help of its attorney, continues to try and get the City
tood that the DOW is trying help in this also.

design modifications to the treatment plant or the design of a new plant which would be submitted for approval to the
g the City to take this system. Continued efforts would be appreciated.

ect it to their trunck line. This treatment plant is old/outdated and the chlorine contact tank is in a location that it is im

the local municipalities to take this facility over and connect the Airview subdivision sewers to a trunk line and elimin
din County to get this system connected to the City or County trunk line so this very old plant can be taken off line.
t was just in the last two weeks that the operator discovered that there was a leak in the lagoon transfer pipe and it v
been trying for quite sometime to get one of the local agencies to take this plant and connect to their trunk line. Lat

able to pay the electric, water, lab expenses and chemical bills. Airview has filed with the PSC to surrender and aba
ns, on the best way to bring it into compliance. The major problem is the location of the chlorine contact and its cond
e purpose of the City assuming the responsibility of the utility and getting it connected to the City sewer system. Air
: that needs to be cleaned out. But it is impossible to get to with a vacuum truck. Also, many of the residents don't
o note that every effort is being made to properly operate this plant and bring it into compliance. But due to the age
own why it was ever approved to placed where it is. Also note that Airview Utilities continues discussions with the C
very effort to bring this plant into compliance. It is an aged plant, far beyond its useful life and cash flow is a major
it is very difficult to achieve compliance. But will continue to work to that goal.Airview continues to communicate wi
renovation has been completed of all drops, including the replacement of all course bubble diffusers. With th
nuary 28th, 2016 because I had requested DCA assistance in bringing the plant into compliance.In addition I continu
e years ago and connected to a regional system. Airview Utilities has made application to the Public Service Comn
is system. The DOW is helping in this matter.
on that is impossible to reach. But Airview Utilities is trying very hard to properly operate this facility. Airview contin
Elizabethtown to get the City to take over this utility. Increased help from the DOW would be appreciated.
es and equipment that wouldn't run it was very difficult to meet the permit limits. All equipment is back in service an
is system. The DOW is working with Airview also to encourage the City to take it.
City of Elizabethtown for Airview to transfer this utility to the City. Of course the intent is for the plant to be eliminate

:ause of its location it is impossible to get to with a tank truck to clean it out. on going efforts are being made to get
l of this facility. The DOW is helping in this matter also.
uest to transfer this utility to the City of Elizabethtown.
:s (environmental engineer) exploring the possibility of using Peracetic Acid for disinfection. Charlie Roth at the Lou

vided the City Attorney with information about 2 types of funding that would be available for the City so they could ha
e responsibility for this system and connect it to the City sewers.
ication to abandon. The City of Elizabethtown would hopefully then take over this facility and connect to the city trur
ndon this facility. In addition Airview is working with the City of Elizabethtown to get the City to take over this systen
s system.The DOW is assisting in this endeavor.
work with the City of Elizabethtown to get the city to take over this utility.
on a regional system. Airview continues to work toward compliance.

nt of this facility. And continues to work with the City of Elizabethtown to get them to work with Airview to approve th
ied to clean it out. Airview continues to try an work with the local Hardin County and Elizabethtown municipalities to
the access to the chlorine contact tank. Note: This is a very difficult place to get to. Eventually service men we ab
ice. Also, Airview Utilities continues to work with the City of Elizabethtown to get the City to take over this system.
plant at times was very heavy.
g has now thawed out and all equipment is back in service.
air lift sludge return was torn up and had to be rebuilt. The disinfection equipment was also damaged and had to be
the chlorine contact tank. So it was necessary to plug that pipe where it enters the CCT. The lagoon is out of serv
difficult to do with the I/I this system receives. Airview, with the help of its attorney, continues to try and get the City
tood that the DOW is trying help in this also.

design modifications to the treatment plant or the design of a new plant which would be submitted for approval to the
g the City to take this system. Continued efforts would be appreciated.

ect it to their trunck line. This treatment plant is old/outdated and the chlorine contact tank is in a location that it is im

the local municipalities to take this facility over and connect the Airview subdivision sewers to a trunk line and elimin
din County to get this system connected to the City or County trunk line so this very old plant can be taken off line.
t was just in the last two weeks that the operator discovered that there was a leak in the lagoon transfer pipe and it v
been trying for quite sometime to get one of the local agencies to take this plant and connect to their trunk line. Lat

able to pay the electric, water, lab expenses and chemical bills. Airview has filed with the PSC to surrender and aba
ns, on the best way to bring it into compliance. The major problem is the location of the chlorine contact and its cond
e purpose of the City assuming the responsibility of the utility and getting it connected to the City sewer system. Air
: that needs to be cleaned out. But it is impossible to get to with a vacuum truck. Also, many of the residents don't
o note that every effort is being made to properly operate this plant and bring it into compliance. But due to the age
own why it was ever approved to placed where it is. Also note that Airview Utilities continues discussions with the C
very effort to bring this plant into compliance. It is an aged plant, far beyond its useful life and cash flow is a major
it is very difficult to achieve compliance. But will continue to work to that goal.Airview continues to communicate wi
renovation has been completed of all drops, including the replacement of all course bubble diffusers. With th
nuary 28th, 2016 because I had requested DCA assistance in bringing the plant into compliance.In addition I continu
e years ago and connected to a regional system. Airview Utilities has made application to the Public Service Comn
is system. The DOW is helping in this matter.
on that is impossible to reach. But Airview Utilities is trying very hard to properly operate this facility. Airview contin
Elizabethtown to get the City to take over this utility. Increased help from the DOW would be appreciated.
es and equipment that wouldn't run it was very difficult to meet the permit limits. All equipment is back in service an
is system. The DOW is working with Airview also to encourage the City to take it.
City of Elizabethtown for Airview to transfer this utility to the City. Of course the intent is for the plant to be eliminate

:ause of its location it is impossible to get to with a tank truck to clean it out. on going efforts are being made to get
l of this facility. The DOW is helping in this matter also.
uest to transfer this utility to the City of Elizabethtown.
:s (environmental engineer) exploring the possibility of using Peracetic Acid for disinfection. Charlie Roth at the Lou

ıve the funds to make this connection. IT WOULD BE GREATLY APPRECIATED IF THE DIVISION OF WATER C

ık line. It would be appreciated if the Division of Water would assist in helping to move this process along. It would
ı.

ıe transfer from Airview Utilities LLC to the City.
get one of them to take this system over. It would be greatly appreciated if the Division of Water would assist Airvi
le to get to the blown down trees, cut them up, remove them so the lab sampler would be able to get to the contact

repaired. Also equipment that was stored in the building was thrown in the plant..8/14/15 - On this date the effluen
ice anyway. The operator also had problems with the air lift sludge return in the plant and major repairs were neces
of Elizabethtown to take this system over.

e DOW and Public Service Commission.Additional information to follow in a correction to this DMR.

ıpossible to get to for cleaning.

ıate this treatment plant.Airview Utilities does continue its efforts to bring this treatment plant into compliance.

was allowing less than disirrable water go direct to the CCT. This of course, we feel is the cause of the permit limits
ely a great deal of effort by Airview Utilities has been spent with the City of Elizabethtown to work out an arrangeme

ındon and hopefully we're getting closer to getting a decision. Also, the City of Elizabethtown is looking into getting
dition. It would be appreciated if the DOW would assist Airview Utilites in getting one of the local municipalities in H
view is assisting the City in trying to locate a source of funds.
pay their sewer fees so Airview doesn't have the cash flow necessary to replace the old contact tank or the treatme
d condition of the WWTP equipment and facilities, the discharge has been unable to meet certain limits set forth in
City of Elizabethtown to take over this Utility.
problem. Airview owes contractors and suppliers close to $100,000. Also, Airview Utilities with the assistance of its
th the City of Elizabethtown to hopefully get the City to take over this utility. Also, note that Airview is working with a
ıese items completed the operator should be able to get increased amount of air into the plant which will
ue to request that the Division of Water assist Airview Utilities in getting one of the local Municipalities to agree to co
ıission to surrender and abandon the facility. Also Airview is negotiating with the City of Elizabethtown to take over

ıues to work with the City of Elizabethtown and Hardin County to get one of these agencies to take over this sewer u

d running as it should.

ed and connected to the City sewers.
the City of Elizabethtown to take over this sewer utility and then tie it into their trunck line.

ıisville Regional Office is aware of this. Airview is exploring the possibility of adding the Peracetic Acid in an effluen

ıve the funds to make this connection. IT WOULD BE GREATLY APPRECIATED IF THE DIVISION OF WATER C

ık line. It would be appreciated if the Division of Water would assist in helping to move this process along. It would
ı.

ıe transfer from Airview Utilities LLC to the City.
get one of them to take this system over. It would be greatly appreciated if the Division of Water would assist Airvi
le to get to the blown down trees, cut them up, remove them so the lab sampler would be able to get to the contact

repaired. Also equipment that was stored in the building was thrown in the plant..8/14/15 - On this date the effluen
ice anyway. The operator also had problems with the air lift sludge return in the plant and major repairs were neces
of Elizabethtown to take this system over.

e DOW and Public Service Commission.Additional information to follow in a correction to this DMR.

ıpossible to get to for cleaning.

ıate this treatment plant.Airview Utilities does continue its efforts to bring this treatment plant into compliance.

was allowing less than disirrable water go direct to the CCT. This of course, we feel is the cause of the permit limits
:ely a great deal of effort by Airview Utilities has been spent with the City of Elizabethtown to work out an arrangeme

ındon and hopefully we're getting closer to getting a decision. Also, the City of Elizabethtown is looking into getting
dition. It would be appreciated if the DOW would assist Airview Utilites in getting one of the local municipalities in H
view is assisting the City in trying to locate a source of funds.
pay their sewer fees so Airview doesn't have the cash flow necessary to replace the old contact tank or the treatme
d condition of the WWTP equipment and facilities, the discharge has been unable to meet certain limits set forth in
City of Elizabethtown to take over this Utility.
problem. Airview owes contractors and suppliers close to $100,000. Also, Airview Utilities with the assistance of its
th the City of Elizabethtown to hopefully get the City to take over this utility. Also, note that Airview is working with a
ıese items completed the operator should be able to get increased amount of air into the plant which will
ue to request that the Division of Water assist Airview Utilities in getting one of the local Municipalities to agree to co
nission to surrender and abandon the facility. Also Airview is negotiating with the City of Elizabethtown to take over

ıues to work with the City of Elizabethtown and Hardin County to get one of these agencies to take over this sewer u

d running as it should.

ed and connected to the City sewers.
the City of Elizabethtown to take over this sewer utility and then tie it into their trunck line.

ıisville Regional Office is aware of this. Airview is exploring the possibility of adding the Peracetic Acid in an effluen

ıve the funds to make this connection. IT WOULD BE GREATLY APPRECIATED IF THE DIVISION OF WATER C

ık line. It would be appreciated if the Division of Water would assist in helping to move this process along. It would
ı.

ıe transfer from Airview Utilities LLC to the City.
get one of them to take this system over. It would be greatly appreciated if the Division of Water would assist Airvi
le to get to the blown down trees, cut them up, remove them so the lab sampler would be able to get to the contact

repaired. Also equipment that was stored in the building was thrown in the plant..8/14/15 - On this date the effluen
ice anyway. The operator also had problems with the air lift sludge return in the plant and major repairs were neces
of Elizabethtown to take this system over.

e DOW and Public Service Commission.Additional information to follow in a correction to this DMR.

ıpossible to get to for cleaning.

ıate this treatment plant.Airview Utilities does continue its efforts to bring this treatment plant into compliance.

was allowing less than disirrable water go direct to the CCT. This of course, we feel is the cause of the permit limits
:ely a great deal of effort by Airview Utilities has been spent with the City of Elizabethtown to work out an arrangeme

ındon and hopefully we're getting closer to getting a decision. Also, the City of Elizabethtown is looking into getting
dition. It would be appreciated if the DOW would assist Airview Utilites in getting one of the local municipalities in H
view is assisting the City in trying to locate a source of funds.
pay their sewer fees so Airview doesn't have the cash flow necessary to replace the old contact tank or the treatme
d condition of the WWTP equipment and facilities, the discharge has been unable to meet certain limits set forth in
City of Elizabethtown to take over this Utility.
problem. Airview owes contractors and suppliers close to $100,000. Also, Airview Utilities with the assistance of its
th the City of Elizabethtown to hopefully get the City to take over this utility. Also, note that Airview is working with a
ıese items completed the operator should be able to get increased amount of air into the plant which will
ue to request that the Division of Water assist Airview Utilities in getting one of the local Municipalities to agree to co
nission to surrender and abandon the facility. Also Airview is negotiating with the City of Elizabethtown to take over

ıues to work with the City of Elizabethtown and Hardin County to get one of these agencies to take over this sewer u

d running as it should.

ed and connected to the City sewers.
the City of Elizabethtown to take over this sewer utility and then tie it into their trunck line.

ıisville Regional Office is aware of this. Airview is exploring the possibility of adding the Peracetic Acid in an effluen

ıve the funds to make this connection. IT WOULD BE GREATLY APPRECIATED IF THE DIVISION OF WATER C

ık line. It would be appreciated if the Division of Water would assist in helping to move this process along. It would
ı.

ıe transfer from Airview Utilities LLC to the City.
get one of them to take this system over. It would be greatly appreciated if the Division of Water would assist Airvi
le to get to the blown down trees, cut them up, remove them so the lab sampler would be able to get to the contact

repaired. Also equipment that was stored in the building was thrown in the plant..8/14/15 - On this date the effluen
ice anyway. The operator also had problems with the air lift sludge return in the plant and major repairs were neces
of Elizabethtown to take this system over.

e DOW and Public Service Commission.Additional information to follow in a correction to this DMR.

ıpossible to get to for cleaning.

ıate this treatment plant.Airview Utilities does continue its efforts to bring this treatment plant into compliance.

was allowing less than disirrable water go direct to the CCT. This of course, we feel is the cause of the permit limits
:ely a great deal of effort by Airview Utilities has been spent with the City of Elizabethtown to work out an arrangeme

ındon and hopefully we're getting closer to getting a decision. Also, the City of Elizabethtown is looking into getting
dition. It would be appreciated if the DOW would assist Airview Utilites in getting one of the local municipalities in H
view is assisting the City in trying to locate a source of funds.
pay their sewer fees so Airview doesn't have the cash flow necessary to replace the old contact tank or the treatme
d condition of the WWTP equipment and facilities, the discharge has been unable to meet certain limits set forth in
City of Elizabethtown to take over this Utility.
problem. Airview owes contractors and suppliers close to $100,000. Also, Airview Utilities with the assistance of its
th the City of Elizabethtown to hopefully get the City to take over this utility. Also, note that Airview is working with a
ıese items completed the operator should be able to get increased amount of air into the plant which will
ue to request that the Division of Water assist Airview Utilities in getting one of the local Municipalities to agree to co
nission to surrender and abandon the facility. Also Airview is negotiating with the City of Elizabethtown to take over

ıues to work with the City of Elizabethtown and Hardin County to get one of these agencies to take over this sewer u

d running as it should.

ed and connected to the City sewers.
the City of Elizabethtown to take over this sewer utility and then tie it into their trunck line.

ıisville Regional Office is aware of this. Airview is exploring the possibility of adding the Peracetic Acid in an effluen

ıve the funds to make this connection. IT WOULD BE GREATLY APPRECIATED IF THE DIVISION OF WATER C

ık line. It would be appreciated if the Division of Water would assist in helping to move this process along. It would
ı.

ıe transfer from Airview Utilities LLC to the City.
get one of them to take this system over. It would be greatly appreciated if the Division of Water would assist Airvi
le to get to the blown down trees, cut them up, remove them so the lab sampler would be able to get to the contact

repaired. Also equipment that was stored in the building was thrown in the plant..8/14/15 - On this date the effluen
ice anyway. The operator also had problems with the air lift sludge return in the plant and major repairs were neces
of Elizabethtown to take this system over.

e DOW and Public Service Commission.Additional information to follow in a correction to this DMR.

ıpossible to get to for cleaning.

ıate this treatment plant.Airview Utilities does continue its efforts to bring this treatment plant into compliance.

was allowing less than disirrable water go direct to the CCT. This of course, we feel is the cause of the permit limits
:ely a great deal of effort by Airview Utilities has been spent with the City of Elizabethtown to work out an arrangeme

ındon and hopefully we're getting closer to getting a decision. Also, the City of Elizabethtown is looking into getting
dition. It would be appreciated if the DOW would assist Airview Utilites in getting one of the local municipalities in H
view is assisting the City in trying to locate a source of funds.
pay their sewer fees so Airview doesn't have the cash flow necessary to replace the old contact tank or the treatme
d condition of the WWTP equipment and facilities, the discharge has been unable to meet certain limits set forth in
City of Elizabethtown to take over this Utility.
problem. Airview owes contractors and suppliers close to $100,000. Also, Airview Utilities with the assistance of its
th the City of Elizabethtown to hopefully get the City to take over this utility. Also, note that Airview is working with a
ıese items completed the operator should be able to get increased amount of air into the plant which will
ue to request that the Division of Water assist Airview Utilities in getting one of the local Municipalities to agree to co
nission to surrender and abandon the facility. Also Airview is negotiating with the City of Elizabethtown to take over

ıues to work with the City of Elizabethtown and Hardin County to get one of these agencies to take over this sewer u

d running as it should.

ed and connected to the City sewers.
the City of Elizabethtown to take over this sewer utility and then tie it into their trunck line.

ıisville Regional Office is aware of this. Airview is exploring the possibility of adding the Peracetic Acid in an effluen

ıve the funds to make this connection. IT WOULD BE GREATLY APPRECIATED IF THE DIVISION OF WATER C

ık line. It would be appreciated if the Division of Water would assist in helping to move this process along. It would
ı.

ıe transfer from Airview Utilities LLC to the City.
get one of them to take this system over. It would be greatly appreciated if the Division of Water would assist Airvi
le to get to the blown down trees, cut them up, remove them so the lab sampler would be able to get to the contact

repaired. Also equipment that was stored in the building was thrown in the plant..8/14/15 - On this date the effluen
ice anyway. The operator also had problems with the air lift sludge return in the plant and major repairs were neces
of Elizabethtown to take this system over.

e DOW and Public Service Commission.Additional information to follow in a correction to this DMR.

ıpossible to get to for cleaning.

ıate this treatment plant.Airview Utilities does continue its efforts to bring this treatment plant into compliance.

was allowing less than disirrable water go direct to the CCT. This of course, we feel is the cause of the permit limits
:ely a great deal of effort by Airview Utilities has been spent with the City of Elizabethtown to work out an arrangeme

ındon and hopefully we're getting closer to getting a decision. Also, the City of Elizabethtown is looking into getting
dition. It would be appreciated if the DOW would assist Airview Utilites in getting one of the local municipalities in H
view is assisting the City in trying to locate a source of funds.
pay their sewer fees so Airview doesn't have the cash flow necessary to replace the old contact tank or the treatme
d condition of the WWTP equipment and facilities, the discharge has been unable to meet certain limits set forth in
City of Elizabethtown to take over this Utility.
problem. Airview owes contractors and suppliers close to $100,000. Also, Airview Utilities with the assistance of its
th the City of Elizabethtown to hopefully get the City to take over this utility. Also, note that Airview is working with a
ıese items completed the operator should be able to get increased amount of air into the plant which will
ue to request that the Division of Water assist Airview Utilities in getting one of the local Municipalities to agree to co
nission to surrender and abandon the facility. Also Airview is negotiating with the City of Elizabethtown to take over

ıues to work with the City of Elizabethtown and Hardin County to get one of these agencies to take over this sewer u

d running as it should.

ed and connected to the City sewers.
the City of Elizabethtown to take over this sewer utility and then tie it into their trunck line.

ıisville Regional Office is aware of this. Airview is exploring the possibility of adding the Peracetic Acid in an effluen

ıve the funds to make this connection. IT WOULD BE GREATLY APPRECIATED IF THE DIVISION OF WATER C

ık line. It would be appreciated if the Division of Water would assist in helping to move this process along. It would
ı.

ıe transfer from Airview Utilities LLC to the City.
get one of them to take this system over. It would be greatly appreciated if the Division of Water would assist Airvi
le to get to the blown down trees, cut them up, remove them so the lab sampler would be able to get to the contact

repaired. Also equipment that was stored in the building was thrown in the plant..8/14/15 - On this date the effluen
ice anyway. The operator also had problems with the air lift sludge return in the plant and major repairs were neces
of Elizabethtown to take this system over.

e DOW and Public Service Commission.Additional information to follow in a correction to this DMR.

ıpossible to get to for cleaning.

ıate this treatment plant.Airview Utilities does continue its efforts to bring this treatment plant into compliance.

was allowing less than disirrable water go direct to the CCT. This of course, we feel is the cause of the permit limits
:ely a great deal of effort by Airview Utilities has been spent with the City of Elizabethtown to work out an arrangeme

ındon and hopefully we're getting closer to getting a decision. Also, the City of Elizabethtown is looking into getting
dition. It would be appreciated if the DOW would assist Airview Utilites in getting one of the local municipalities in H
view is assisting the City in trying to locate a source of funds.
pay their sewer fees so Airview doesn't have the cash flow necessary to replace the old contact tank or the treatme
d condition of the WWTP equipment and facilities, the discharge has been unable to meet certain limits set forth in
City of Elizabethtown to take over this Utility.
problem. Airview owes contractors and suppliers close to $100,000. Also, Airview Utilities with the assistance of its
th the City of Elizabethtown to hopefully get the City to take over this utility. Also, note that Airview is working with a
ıese items completed the operator should be able to get increased amount of air into the plant which will
ue to request that the Division of Water assist Airview Utilities in getting one of the local Municipalities to agree to co
nission to surrender and abandon the facility. Also Airview is negotiating with the City of Elizabethtown to take over

ıues to work with the City of Elizabethtown and Hardin County to get one of these agencies to take over this sewer u

d running as it should.

ed and connected to the City sewers.
the City of Elizabethtown to take over this sewer utility and then tie it into their trunck line.

ıisville Regional Office is aware of this. Airview is exploring the possibility of adding the Peracetic Acid in an effluen

ıe transfer from Airview Utilities LLC to the City.
le to get to the blown down trees, cut them up, remove them so the lab sampler would be able to get to the contact t

repaired. Also equipment that was stored in the building was thrown in the plant..8/14/15 - On this date the effluen
of Elizabethtown to take this system over.

e DOW and Public Service Commission.Additional information to follow in a correction to this DMR.

ely a great deal of effort by Airview Utilities has been spent with the City of Elizabethtown to work out an arrangeme
view is assisting the City in trying to locate a source of funds.
pay their sewer fees so Airview doesn't have the cash flow necessary to replace the old contact tank or the treatmer
d condition of the WWTP equipment and facilities, the discharge has been unable to meet certain limits set forth in t
City of Elizabethtown to take over this Utility.
problem. Airview owes contractors and suppliers close to $100,000. Also, Airview Utilities with the assistance of its
ıese items completed the operator should be able to get increased amount of air into the plant which will
ıission to surrender and abandon the facility. Also Airview is negotiating with the City of Elizabethtown to take over

ıues to work with the City of Elizabethtown and Hardin County to get one of these agencies to take over this sewer u

the City of Elizabethtown to take over this sewer utility and then tie it into their trunck line.

ıe transfer from Airview Utilities LLC to the City.
le to get to the blown down trees, cut them up, remove them so the lab sampler would be able to get to the contact t

repaired. Also equipment that was stored in the building was thrown in the plant..8/14/15 - On this date the effluen
of Elizabethtown to take this system over.

e DOW and Public Service Commission.Additional information to follow in a correction to this DMR.

ely a great deal of effort by Airview Utilities has been spent with the City of Elizabethtown to work out an arrangeme
view is assisting the City in trying to locate a source of funds.
pay their sewer fees so Airview doesn't have the cash flow necessary to replace the old contact tank or the treatmer
d condition of the WWTP equipment and facilities, the discharge has been unable to meet certain limits set forth in t
City of Elizabethtown to take over this Utility.
problem. Airview owes contractors and suppliers close to $100,000. Also, Airview Utilities with the assistance of its
ıese items completed the operator should be able to get increased amount of air into the plant which will
ıission to surrender and abandon the facility. Also Airview is negotiating with the City of Elizabethtown to take over

ıues to work with the City of Elizabethtown and Hardin County to get one of these agencies to take over this sewer u

the City of Elizabethtown to take over this sewer utility and then tie it into their trunck line.

ıe transfer from Airview Utilities LLC to the City.
le to get to the blown down trees, cut them up, remove them so the lab sampler would be able to get to the contact t

repaired. Also equipment that was stored in the building was thrown in the plant..8/14/15 - On this date the effluen
of Elizabethtown to take this system over.

e DOW and Public Service Commission.Additional information to follow in a correction to this DMR.

ely a great deal of effort by Airview Utilities has been spent with the City of Elizabethtown to work out an arrangeme
view is assisting the City in trying to locate a source of funds.
pay their sewer fees so Airview doesn't have the cash flow necessary to replace the old contact tank or the treatmer
d condition of the WWTP equipment and facilities, the discharge has been unable to meet certain limits set forth in t
City of Elizabethtown to take over this Utility.
problem. Airview owes contractors and suppliers close to $100,000. Also, Airview Utilities with the assistance of its
ıese items completed the operator should be able to get increased amount of air into the plant which will
ıission to surrender and abandon the facility. Also Airview is negotiating with the City of Elizabethtown to take over

ıues to work with the City of Elizabethtown and Hardin County to get one of these agencies to take over this sewer u

the City of Elizabethtown to take over this sewer utility and then tie it into their trunck line.

ıe transfer from Airview Utilities LLC to the City.
le to get to the blown down trees, cut them up, remove them so the lab sampler would be able to get to the contact t

repaired. Also equipment that was stored in the building was thrown in the plant..8/14/15 - On this date the effluen
of Elizabethtown to take this system over.

e DOW and Public Service Commission.Additional information to follow in a correction to this DMR.

ely a great deal of effort by Airview Utilities has been spent with the City of Elizabethtown to work out an arrangeme
view is assisting the City in trying to locate a source of funds.
pay their sewer fees so Airview doesn't have the cash flow necessary to replace the old contact tank or the treatmer
d condition of the WWTP equipment and facilities, the discharge has been unable to meet certain limits set forth in t
City of Elizabethtown to take over this Utility.
problem. Airview owes contractors and suppliers close to $100,000. Also, Airview Utilities with the assistance of its
ıese items completed the operator should be able to get increased amount of air into the plant which will
ıission to surrender and abandon the facility. Also Airview is negotiating with the City of Elizabethtown to take over

ıues to work with the City of Elizabethtown and Hardin County to get one of these agencies to take over this sewer u

the City of Elizabethtown to take over this sewer utility and then tie it into their trunck line.

ıve the funds to make this connection. IT WOULD BE GREATLY APPRECIATED IF THE DIVISION OF WATER C
ık line. It would be appreciated if the Division of Water would assist in helping to move this process along. It would
ı.

get one of them to take this system over. It would be greatly appreciated if the Division of Water would assist Airvi

ice anyway. The operator also had problems with the air lift sludge return in the plant and major repairs were neces

ıpossible to get to for cleaning.
ıate this treatment plant.Airview Utilities does continue its efforts to bring this treatment plant into compliance.
was allowing less than disirrable water go direct to the CCT. This of course, we feel is the cause of the permit limits

ındon and hopefully we're getting closer to getting a decision. Also, the City of Elizabethtown is looking into getting
dition. It would be appreciated if the DOW would assist Airview Utilites in getting one of the local municipalities in H
th the City of Elizabethtown to hopefully get the City to take over this utility. Also, note that Airview is working with a
ue to request that the Division of Water assist Airview Utilities in getting one of the local Municipalities to agree to cc

d running as it should.
ed and connected to the City sewers.

iisville Regional Office is aware of this. Airview is exploring the possibility of adding the Peracetic Acid in an effluen

ıve the funds to make this connection. IT WOULD BE GREATLY APPRECIATED IF THE DIVISION OF WATER C
ık line. It would be appreciated if the Division of Water would assist in helping to move this process along. It would
ı.

get one of them to take this system over. It would be greatly appreciated if the Division of Water would assist Airvi

ice anyway. The operator also had problems with the air lift sludge return in the plant and major repairs were neces

ıpossible to get to for cleaning.
ıate this treatment plant.Airview Utilities does continue its efforts to bring this treatment plant into compliance.
was allowing less than disirrable water go direct to the CCT. This of course, we feel is the cause of the permit limits

ındon and hopefully we're getting closer to getting a decision. Also, the City of Elizabethtown is looking into getting
dition. It would be appreciated if the DOW would assist Airview Utilites in getting one of the local municipalities in H
th the City of Elizabethtown to hopefully get the City to take over this utility. Also, note that Airview is working with a
ue to request that the Division of Water assist Airview Utilities in getting one of the local Municipalities to agree to cc

d running as it should.

ed and connected to the City sewers.

iisville Regional Office is aware of this. Airview is exploring the possibility of adding the Peracetic Acid in an effluent

ave the funds to make this connection. IT WOULD BE GREATLY APPRECIATED IF THE DIVISION OF WATER C
nk line. It would be appreciated if the Division of Water would assist in helping to move this process along. It would
n.

get one of them to take this system over. It would be greatly appreciated if the Division of Water would assist Airvi

ice anyway. The operator also had problems with the air lift sludge return in the plant and major repairs were neces

npossible to get to for cleaning.
nate this treatment plant.Airview Utilities does continue its efforts to bring this treatment plant into compliance.
was allowing less than disirrable water go direct to the CCT. This of course, we feel is the cause of the permit limits

andon and hopefully we're getting closer to getting a decision. Also, the City of Elizabethtown is looking into getting
dition. It would be appreciated if the DOW would assist Airview Utilites in getting one of the local municipalities in H
th the City of Elizabethtown to hopefully get the City to take over this utility. Also, note that Airview is working with a
ue to request that the Division of Water assist Airview Utilities in getting one of the local Municipalities to agree to co

d running as it should.
ed and connected to the City sewers.

iisville Regional Office is aware of this. Airview is exploring the possibility of adding the Peracetic Acid in an effluent

ave the funds to make this connection. IT WOULD BE GREATLY APPRECIATED IF THE DIVISION OF WATER C
nk line. It would be appreciated if the Division of Water would assist in helping to move this process along. It would
n.

get one of them to take this system over. It would be greatly appreciated if the Division of Water would assist Airvi

ice anyway. The operator also had problems with the air lift sludge return in the plant and major repairs were neces

npossible to get to for cleaning.
nate this treatment plant.Airview Utilities does continue its efforts to bring this treatment plant into compliance.
was allowing less than disirrable water go direct to the CCT. This of course, we feel is the cause of the permit limits

andon and hopefully we're getting closer to getting a decision. Also, the City of Elizabethtown is looking into getting
dition. It would be appreciated if the DOW would assist Airview Utilites in getting one of the local municipalities in H
th the City of Elizabethtown to hopefully get the City to take over this utility. Also, note that Airview is working with a
ue to request that the Division of Water assist Airview Utilities in getting one of the local Municipalities to agree to co

d running as it should.
ed and connected to the City sewers.

isville Regional Office is aware of this. Airview is exploring the possibility of adding the Peracetic Acid in an effluen

ve the funds to make this connection. IT WOULD BE GREATLY APPRECIATED IF THE DIVISION OF WATER C

k line. It would be appreciated if the Division of Water would assist in helping to move this process along. It would
n.

e transfer from Airview Utilities LLC to the City.
get one of them to take this system over. It would be greatly appreciated if the Division of Water would assist Airvi
le to get to the blown down trees, cut them up, remove them so the lab sampler would be able to get to the contact

repaired. Also equipment that was stored in the building was thrown in the plant..8/14/15 - On this date the effluen
ice anyway. The operator also had problems with the air lift sludge return in the plant and major repairs were neces
of Elizabethtown to take this system over.

e DOW and Public Service Commission.Additional information to follow in a correction to this DMR.

possible to get to for cleaning.

nate this treatment plant.Airview Utilities does continue its efforts to bring this treatment plant into compliance.

was allowing less than disirrable water go direct to the CCT. This of course, we feel is the cause of the permit limits
ely a great deal of effort by Airview Utilities has been spent with the City of Elizabethtown to work out an arrangeme

ndon and hopefully we're getting closer to getting a decision. Also, the City of Elizabethtown is looking into getting
dition. It would be appreciated if the DOW would assist Airview Utilites in getting one of the local municipalities in H
view is assisting the City in trying to locate a source of funds.
pay their sewer fees so Airview doesn't have the cash flow necessary to replace the old contact tank or the treatme
d condition of the WWTP equipment and facilities, the discharge has been unable to meet certain limits set forth in
City of Elizabethtown to take over this Utility.
problem. Airview owes contractors and suppliers close to $100,000. Also, Airview Utilities with the assistance of its
th the City of Elizabethtown to hopefully get the City to take over this utility. Also, note that Airview is working with a
hese items completed the operator should be able to get increased amount of air into the plant which will
ue to request that the Division of Water assist Airview Utilities in getting one of the local Municipalities to agree to co
mission to surrender and abandon the facility. Also Airview is negotiating with the City of Elizabethtown to take over

ues to work with the City of Elizabethtown and Hardin County to get one of these agencies to take over this sewer u

d running as it should.

ed and connected to the City sewers.

the City of Elizabethtown to take over this sewer utility and then tie it into their trunck line.

isville Regional Office is aware of this. Airview is exploring the possibility of adding the Peracetic Acid in an effluen

ve the funds to make this connection. IT WOULD BE GREATLY APPRECIATED IF THE DIVISION OF WATER C

k line. It would be appreciated if the Division of Water would assist in helping to move this process along. It would
n.

e transfer from Airview Utilities LLC to the City.
get one of them to take this system over. It would be greatly appreciated if the Division of Water would assist Airvi
le to get to the blown down trees, cut them up, remove them so the lab sampler would be able to get to the contact

repaired. Also equipment that was stored in the building was thrown in the plant..8/14/15 - On this date the effluen
ice anyway. The operator also had problems with the air lift sludge return in the plant and major repairs were neces
of Elizabethtown to take this system over.

e DOW and Public Service Commission.Additional information to follow in a correction to this DMR.

possible to get to for cleaning.

nate this treatment plant.Airview Utilities does continue its efforts to bring this treatment plant into compliance.

was allowing less than disirrable water go direct to the CCT. This of course, we feel is the cause of the permit limits
ely a great deal of effort by Airview Utilities has been spent with the City of Elizabethtown to work out an arrangeme

ndon and hopefully we're getting closer to getting a decision. Also, the City of Elizabethtown is looking into getting
dition. It would be appreciated if the DOW would assist Airview Utilites in getting one of the local municipalities in H
view is assisting the City in trying to locate a source of funds.
pay their sewer fees so Airview doesn't have the cash flow necessary to replace the old contact tank or the treatme
d condition of the WWTP equipment and facilities, the discharge has been unable to meet certain limits set forth in
City of Elizabethtown to take over this Utility.
problem. Airview owes contractors and suppliers close to $100,000. Also, Airview Utilities with the assistance of its
th the City of Elizabethtown to hopefully get the City to take over this utility. Also, note that Airview is working with a
hese items completed the operator should be able to get increased amount of air into the plant which will
ue to request that the Division of Water assist Airview Utilities in getting one of the local Municipalities to agree to co
nission to surrender and abandon the facility. Also Airview is negotiating with the City of Elizabethtown to take over

ues to work with the City of Elizabethtown and Hardin County to get one of these agencies to take over this sewer u

d running as it should.

ed and connected to the City sewers.

the City of Elizabethtown to take over this sewer utility and then tie it into their trunck line.

isville Regional Office is aware of this. Airview is exploring the possibility of adding the Peracetic Acid in an effluen

ve the funds to make this connection. IT WOULD BE GREATLY APPRECIATED IF THE DIVISION OF WATER C

k line. It would be appreciated if the Division of Water would assist in helping to move this process along. It would
n.

e transfer from Airview Utilities LLC to the City.
get one of them to take this system over. It would be greatly appreciated if the Division of Water would assist Airvi
le to get to the blown down trees, cut them up, remove them so the lab sampler would be able to get to the contact

repaired. Also equipment that was stored in the building was thrown in the plant..8/14/15 - On this date the effluen
ice anyway. The operator also had problems with the air lift sludge return in the plant and major repairs were neces
of Elizabethtown to take this system over.

e DOW and Public Service Commission.Additional information to follow in a correction to this DMR.

possible to get to for cleaning.

nate this treatment plant.Airview Utilities does continue its efforts to bring this treatment plant into compliance.

was allowing less than disirrable water go direct to the CCT. This of course, we feel is the cause of the permit limits
ely a great deal of effort by Airview Utilities has been spent with the City of Elizabethtown to work out an arrangeme

ndon and hopefully we're getting closer to getting a decision. Also, the City of Elizabethtown is looking into getting
dition. It would be appreciated if the DOW would assist Airview Utilites in getting one of the local municipalities in H
view is assisting the City in trying to locate a source of funds.
pay their sewer fees so Airview doesn't have the cash flow necessary to replace the old contact tank or the treatme
d condition of the WWTP equipment and facilities, the discharge has been unable to meet certain limits set forth in
City of Elizabethtown to take over this Utility.
problem. Airview owes contractors and suppliers close to $100,000. Also, Airview Utilities with the assistance of its
th the City of Elizabethtown to hopefully get the City to take over this utility. Also, note that Airview is working with a
hese items completed the operator should be able to get increased amount of air into the plant which will
ue to request that the Division of Water assist Airview Utilities in getting one of the local Municipalities to agree to co
nission to surrender and abandon the facility. Also Airview is negotiating with the City of Elizabethtown to take over

ues to work with the City of Elizabethtown and Hardin County to get one of these agencies to take over this sewer u

d running as it should.

ed and connected to the City sewers.

the City of Elizabethtown to take over this sewer utility and then tie it into their trunck line.

isville Regional Office is aware of this. Airview is exploring the possibility of adding the Peracetic Acid in an effluen

ve the funds to make this connection. IT WOULD BE GREATLY APPRECIATED IF THE DIVISION OF WATER C

k line. It would be appreciated if the Division of Water would assist in helping to move this process along. It would
n.

e transfer from Airview Utilities LLC to the City.
get one of them to take this system over. It would be greatly appreciated if the Division of Water would assist Airvi
le to get to the blown down trees, cut them up, remove them so the lab sampler would be able to get to the contact

repaired. Also equipment that was stored in the building was thrown in the plant..8/14/15 - On this date the effluen
ice anyway. The operator also had problems with the air lift sludge return in the plant and major repairs were neces
of Elizabethtown to take this system over.

e DOW and Public Service Commission.Additional information to follow in a correction to this DMR.

possible to get to for cleaning.

nate this treatment plant.Airview Utilities does continue its efforts to bring this treatment plant into compliance.

was allowing less than disirrable water go direct to the CCT. This of course, we feel is the cause of the permit limits
ely a great deal of effort by Airview Utilities has been spent with the City of Elizabethtown to work out an arrangeme

ndon and hopefully we're getting closer to getting a decision. Also, the City of Elizabethtown is looking into getting
dition. It would be appreciated if the DOW would assist Airview Utilites in getting one of the local municipalities in H
view is assisting the City in trying to locate a source of funds.
pay their sewer fees so Airview doesn't have the cash flow necessary to replace the old contact tank or the treatme
d condition of the WWTP equipment and facilities, the discharge has been unable to meet certain limits set forth in
City of Elizabethtown to take over this Utility.
problem. Airview owes contractors and suppliers close to $100,000. Also, Airview Utilities with the assistance of its
th the City of Elizabethtown to hopefully get the City to take over this utility. Also, note that Airview is working with a
hese items completed the operator should be able to get increased amount of air into the plant which will
ue to request that the Division of Water assist Airview Utilities in getting one of the local Municipalities to agree to co
nission to surrender and abandon the facility. Also Airview is negotiating with the City of Elizabethtown to take over

ues to work with the City of Elizabethtown and Hardin County to get one of these agencies to take over this sewer u

d running as it should.

ed and connected to the City sewers.

the City of Elizabethtown to take over this sewer utility and then tie it into their trunck line.

isville Regional Office is aware of this. Airview is exploring the possibility of adding the Peracetic Acid in an effluen

ve the funds to make this connection. IT WOULD BE GREATLY APPRECIATED IF THE DIVISION OF WATER C

k line. It would be appreciated if the Division of Water would assist in helping to move this process along. It would
n.

e transfer from Airview Utilities LLC to the City.
get one of them to take this system over. It would be greatly appreciated if the Division of Water would assist Airvi
le to get to the blown down trees, cut them up, remove them so the lab sampler would be able to get to the contact

repaired. Also equipment that was stored in the building was thrown in the plant..8/14/15 - On this date the effluen
ice anyway. The operator also had problems with the air lift sludge return in the plant and major repairs were neces
of Elizabethtown to take this system over.

e DOW and Public Service Commission.Additional information to follow in a correction to this DMR.

possible to get to for cleaning.

nate this treatment plant.Airview Utilities does continue its efforts to bring this treatment plant into compliance.

was allowing less than disirrable water go direct to the CCT. This of course, we feel is the cause of the permit limits
ely a great deal of effort by Airview Utilities has been spent with the City of Elizabethtown to work out an arrangeme

ndon and hopefully we're getting closer to getting a decision. Also, the City of Elizabethtown is looking into getting
dition. It would be appreciated if the DOW would assist Airview Utilites in getting one of the local municipalities in H
view is assisting the City in trying to locate a source of funds.
pay their sewer fees so Airview doesn't have the cash flow necessary to replace the old contact tank or the treatme
d condition of the WWTP equipment and facilities, the discharge has been unable to meet certain limits set forth in
City of Elizabethtown to take over this Utility.
problem. Airview owes contractors and suppliers close to $100,000. Also, Airview Utilities with the assistance of its
th the City of Elizabethtown to hopefully get the City to take over this utility. Also, note that Airview is working with a
hese items completed the operator should be able to get increased amount of air into the plant which will
ue to request that the Division of Water assist Airview Utilities in getting one of the local Municipalities to agree to co
nission to surrender and abandon the facility. Also Airview is negotiating with the City of Elizabethtown to take over

ues to work with the City of Elizabethtown and Hardin County to get one of these agencies to take over this sewer u

d running as it should.

ed and connected to the City sewers.

the City of Elizabethtown to take over this sewer utility and then tie it into their trunck line.

isville Regional Office is aware of this. Airview is exploring the possibility of adding the Peracetic Acid in an effluen

ve the funds to make this connection. IT WOULD BE GREATLY APPRECIATED IF THE DIVISION OF WATER C

k line. It would be appreciated if the Division of Water would assist in helping to move this process along. It would
n.

e transfer from Airview Utilities LLC to the City.
get one of them to take this system over. It would be greatly appreciated if the Division of Water would assist Airvi
le to get to the blown down trees, cut them up, remove them so the lab sampler would be able to get to the contact

repaired. Also equipment that was stored in the building was thrown in the plant..8/14/15 - On this date the effluen
ice anyway. The operator also had problems with the air lift sludge return in the plant and major repairs were neces
of Elizabethtown to take this system over.

e DOW and Public Service Commission.Additional information to follow in a correction to this DMR.

possible to get to for cleaning.

nate this treatment plant.Airview Utilities does continue its efforts to bring this treatment plant into compliance.

was allowing less than disirrable water go direct to the CCT. This of course, we feel is the cause of the permit limits
ely a great deal of effort by Airview Utilities has been spent with the City of Elizabethtown to work out an arrangeme

ndon and hopefully we're getting closer to getting a decision. Also, the City of Elizabethtown is looking into getting
dition. It would be appreciated if the DOW would assist Airview Utilites in getting one of the local municipalities in H
view is assisting the City in trying to locate a source of funds.
pay their sewer fees so Airview doesn't have the cash flow necessary to replace the old contact tank or the treatme
d condition of the WWTP equipment and facilities, the discharge has been unable to meet certain limits set forth in
City of Elizabethtown to take over this Utility.
problem. Airview owes contractors and suppliers close to $100,000. Also, Airview Utilities with the assistance of its
th the City of Elizabethtown to hopefully get the City to take over this utility. Also, note that Airview is working with a
hese items completed the operator should be able to get increased amount of air into the plant which will
ue to request that the Division of Water assist Airview Utilities in getting one of the local Municipalities to agree to co
nission to surrender and abandon the facility. Also Airview is negotiating with the City of Elizabethtown to take over

ues to work with the City of Elizabethtown and Hardin County to get one of these agencies to take over this sewer u

d running as it should.

ed and connected to the City sewers.

the City of Elizabethtown to take over this sewer utility and then tie it into their trunck line.

isville Regional Office is aware of this. Airview is exploring the possibility of adding the Peracetic Acid in an effluen

ve the funds to make this connection. IT WOULD BE GREATLY APPRECIATED IF THE DIVISION OF WATER C

k line. It would be appreciated if the Division of Water would assist in helping to move this process along. It would
n.

e transfer from Airview Utilities LLC to the City.
get one of them to take this system over. It would be greatly appreciated if the Division of Water would assist Airvi
le to get to the blown down trees, cut them up, remove them so the lab sampler would be able to get to the contact

repaired. Also equipment that was stored in the building was thrown in the plant..8/14/15 - On this date the effluen
ice anyway. The operator also had problems with the air lift sludge return in the plant and major repairs were neces
of Elizabethtown to take this system over.

e DOW and Public Service Commission.Additional information to follow in a correction to this DMR.

possible to get to for cleaning.

nate this treatment plant.Airview Utilities does continue its efforts to bring this treatment plant into compliance.

was allowing less than disirrable water go direct to the CCT. This of course, we feel is the cause of the permit limits
ely a great deal of effort by Airview Utilities has been spent with the City of Elizabethtown to work out an arrangeme

ndon and hopefully we're getting closer to getting a decision. Also, the City of Elizabethtown is looking into getting
dition. It would be appreciated if the DOW would assist Airview Utilites in getting one of the local municipalities in H
view is assisting the City in trying to locate a source of funds.
pay their sewer fees so Airview doesn't have the cash flow necessary to replace the old contact tank or the treatme
d condition of the WWTP equipment and facilities, the discharge has been unable to meet certain limits set forth in
City of Elizabethtown to take over this Utility.
problem. Airview owes contractors and suppliers close to $100,000. Also, Airview Utilities with the assistance of its
th the City of Elizabethtown to hopefully get the City to take over this utility. Also, note that Airview is working with a
hese items completed the operator should be able to get increased amount of air into the plant which will
ue to request that the Division of Water assist Airview Utilities in getting one of the local Municipalities to agree to co
nission to surrender and abandon the facility. Also Airview is negotiating with the City of Elizabethtown to take over

ues to work with the City of Elizabethtown and Hardin County to get one of these agencies to take over this sewer u

d running as it should.

ed and connected to the City sewers.

the City of Elizabethtown to take over this sewer utility and then tie it into their trunck line.

isville Regional Office is aware of this. Airview is exploring the possibility of adding the Peracetic Acid in an effluen

ve the funds to make this connection. IT WOULD BE GREATLY APPRECIATED IF THE DIVISION OF WATER C

k line. It would be appreciated if the Division of Water would assist in helping to move this process along. It would
n.

e transfer from Airview Utilities LLC to the City.
get one of them to take this system over. It would be greatly appreciated if the Division of Water would assist Airvi
le to get to the blown down trees, cut them up, remove them so the lab sampler would be able to get to the contact

repaired. Also equipment that was stored in the building was thrown in the plant..8/14/15 - On this date the effluen
ice anyway. The operator also had problems with the air lift sludge return in the plant and major repairs were neces
of Elizabethtown to take this system over.

e DOW and Public Service Commission.Additional information to follow in a correction to this DMR.

possible to get to for cleaning.

nate this treatment plant.Airview Utilities does continue its efforts to bring this treatment plant into compliance.

was allowing less than disirrable water go direct to the CCT. This of course, we feel is the cause of the permit limits
ely a great deal of effort by Airview Utilities has been spent with the City of Elizabethtown to work out an arrangeme

ndon and hopefully we're getting closer to getting a decision. Also, the City of Elizabethtown is looking into getting
dition. It would be appreciated if the DOW would assist Airview Utilites in getting one of the local municipalities in H
view is assisting the City in trying to locate a source of funds.
pay their sewer fees so Airview doesn't have the cash flow necessary to replace the old contact tank or the treatme
d condition of the WWTP equipment and facilities, the discharge has been unable to meet certain limits set forth in
City of Elizabethtown to take over this Utility.
problem. Airview owes contractors and suppliers close to $100,000. Also, Airview Utilities with the assistance of its
th the City of Elizabethtown to hopefully get the City to take over this utility. Also, note that Airview is working with a
hese items completed the operator should be able to get increased amount of air into the plant which will
ue to request that the Division of Water assist Airview Utilities in getting one of the local Municipalities to agree to co
nission to surrender and abandon the facility. Also Airview is negotiating with the City of Elizabethtown to take over

ues to work with the City of Elizabethtown and Hardin County to get one of these agencies to take over this sewer u

d running as it should.

ed and connected to the City sewers.

the City of Elizabethtown to take over this sewer utility and then tie it into their trunck line.

isville Regional Office is aware of this. Airview is exploring the possibility of adding the Peracetic Acid in an effluen

ve the funds to make this connection. IT WOULD BE GREATLY APPRECIATED IF THE DIVISION OF WATER C

k line. It would be appreciated if the Division of Water would assist in helping to move this process along. It would
n.

e transfer from Airview Utilities LLC to the City.
get one of them to take this system over. It would be greatly appreciated if the Division of Water would assist Airvi
le to get to the blown down trees, cut them up, remove them so the lab sampler would be able to get to the contact

repaired. Also equipment that was stored in the building was thrown in the plant..8/14/15 - On this date the effluen
ice anyway. The operator also had problems with the air lift sludge return in the plant and major repairs were neces
of Elizabethtown to take this system over.

e DOW and Public Service Commission.Additional information to follow in a correction to this DMR.

possible to get to for cleaning.

nate this treatment plant.Airview Utilities does continue its efforts to bring this treatment plant into compliance.

was allowing less than disirrable water go direct to the CCT. This of course, we feel is the cause of the permit limits
ely a great deal of effort by Airview Utilities has been spent with the City of Elizabethtown to work out an arrangeme

ndon and hopefully we're getting closer to getting a decision. Also, the City of Elizabethtown is looking into getting
dition. It would be appreciated if the DOW would assist Airview Utilites in getting one of the local municipalities in H
view is assisting the City in trying to locate a source of funds.
pay their sewer fees so Airview doesn't have the cash flow necessary to replace the old contact tank or the treatme
d condition of the WWTP equipment and facilities, the discharge has been unable to meet certain limits set forth in
City of Elizabethtown to take over this Utility.
problem. Airview owes contractors and suppliers close to $100,000. Also, Airview Utilities with the assistance of its
th the City of Elizabethtown to hopefully get the City to take over this utility. Also, note that Airview is working with a
hese items completed the operator should be able to get increased amount of air into the plant which will
ue to request that the Division of Water assist Airview Utilities in getting one of the local Municipalities to agree to co
nission to surrender and abandon the facility. Also Airview is negotiating with the City of Elizabethtown to take over

ues to work with the City of Elizabethtown and Hardin County to get one of these agencies to take over this sewer u

d running as it should.

ed and connected to the City sewers.

the City of Elizabethtown to take over this sewer utility and then tie it into their trunck line.

isville Regional Office is aware of this. Airview is exploring the possibility of adding the Peracetic Acid in an effluen

ve the funds to make this connection. IT WOULD BE GREATLY APPRECIATED IF THE DIVISION OF WATER C

k line. It would be appreciated if the Division of Water would assist in helping to move this process along. It would
n.

e transfer from Airview Utilities LLC to the City.
get one of them to take this system over. It would be greatly appreciated if the Division of Water would assist Airvi
le to get to the blown down trees, cut them up, remove them so the lab sampler would be able to get to the contact

repaired. Also equipment that was stored in the building was thrown in the plant..8/14/15 - On this date the effluen
ice anyway. The operator also had problems with the air lift sludge return in the plant and major repairs were neces
of Elizabethtown to take this system over.

e DOW and Public Service Commission.Additional information to follow in a correction to this DMR.

possible to get to for cleaning.

nate this treatment plant.Airview Utilities does continue its efforts to bring this treatment plant into compliance.

was allowing less than disirrable water go direct to the CCT. This of course, we feel is the cause of the permit limits
ely a great deal of effort by Airview Utilities has been spent with the City of Elizabethtown to work out an arrangeme

ndon and hopefully we're getting closer to getting a decision. Also, the City of Elizabethtown is looking into getting
dition. It would be appreciated if the DOW would assist Airview Utilites in getting one of the local municipalities in H
view is assisting the City in trying to locate a source of funds.
pay their sewer fees so Airview doesn't have the cash flow necessary to replace the old contact tank or the treatme
d condition of the WWTP equipment and facilities, the discharge has been unable to meet certain limits set forth in
City of Elizabethtown to take over this Utility.
problem. Airview owes contractors and suppliers close to $100,000. Also, Airview Utilities with the assistance of its
th the City of Elizabethtown to hopefully get the City to take over this utility. Also, note that Airview is working with a
hese items completed the operator should be able to get increased amount of air into the plant which will
ue to request that the Division of Water assist Airview Utilities in getting one of the local Municipalities to agree to co
nission to surrender and abandon the facility. Also Airview is negotiating with the City of Elizabethtown to take over

ues to work with the City of Elizabethtown and Hardin County to get one of these agencies to take over this sewer u

d running as it should.

ed and connected to the City sewers.

the City of Elizabethtown to take over this sewer utility and then tie it into their trunck line.

isville Regional Office is aware of this. Airview is exploring the possibility of adding the Peracetic Acid in an effluen

COULD ASSIST IN GETTING THIS DONE.

be for the good of everyone involved. When Airview Utilities LLC took over this sewer system it was with the under

ew Utilities in this endeavor.
tank to take samples. There will be results for August.

t pump had to be repaired and the discharge pipe cleaned out. Also had to repair a crack in the air lift sludge returr
sary. Repairs have been completed.

being exceeded for a number of the parameters. This pipe has been plugged. Future lab results should be improv
nt for them to take it over. Also, Airview has been working with the KIA to hopefully secure funds for Elizabethtown

the funding to connect Airview subdivision to the City main.
ardin County to take over the sewer utility in this subdivision.

nt plant. Airview has made many attempts to get one of the local municipalities to take this over and connect it to th
the KPDES permit. On going repairs have been made to the equipment and facilites, but there has been insufficien

attorney is making every effort to persuade one of the local municipalities to assume control of this utility.
n out of state company, Central States Water Resources, to get them to take over this utility. They have the resour
help the quality of effluent.
onnect the Airview subdivision to their system.
this system. as soon as possible.

tility. It would be greatly appreciated if the Division of Water could assist Airview in this endeavor.

t tank that is a part of the main plant. The existing chlorine contact tank is in a location that makes it impossible to g

:OULD ASSIST IN GETTING THIS DONE.

be for the good of everyone involved. When Airview Utilities LLC took over this sewer system it was with the under

ew Utilities in this endeavor.
tank to take samples. There will be results for August.

ıt pump had to be repaired and the discharge pipe cleaned out. Also had to repair a crack in the air lift sludge returr
ssary. Repairs have been completed.

; being exceeded for a number of the parameters. This pipe has been plugged. Future lab results should be improv
ent for them to take it over. Also, Airview has been working with the KIA to hopefully secure funds for Elizabethtown

the funding to connect Airview subdivision to the City main.
ardin County to take over the sewer utility in this subdivision.

nt plant. Airview has made many attempts to get one of the local municipalities to take this over and connect it to th
the KPDES permit. On going repairs have been made to the equipment and facilites, but there has been insufficien

s attorney is making every effort to persuade one of the local municipalities to assume control of this utility.
ın out of state company, Central States Water Resources, to get them to take over this utility. They have the resour
help the quality of effluent.
onnect the Airview subdivision to their system.
this system. as soon as possible.

ıtility. It would be greatly appreciated if the Division of Water could assist Airview in this endeavor.

t tank that is a part of the main plant. The existing chlorine contact tank is in a location that makes it impossible to g

:OULD ASSIST IN GETTING THIS DONE.

be for the good of everyone involved. When Airview Utilities LLC took over this sewer system it was with the under

ew Utilities in this endeavor.
tank to take samples. There will be results for August.

ıt pump had to be repaired and the discharge pipe cleaned out. Also had to repair a crack in the air lift sludge returr
ssary. Repairs have been completed.

; being exceeded for a number of the parameters. This pipe has been plugged. Future lab results should be improv
ent for them to take it over. Also, Airview has been working with the KIA to hopefully secure funds for Elizabethtown

the funding to connect Airview subdivision to the City main.
ardin County to take over the sewer utility in this subdivision.

nt plant. Airview has made many attempts to get one of the local municipalities to take this over and connect it to th
the KPDES permit. On going repairs have been made to the equipment and facilites, but there has been insufficien

s attorney is making every effort to persuade one of the local municipalities to assume control of this utility.
ın out of state company, Central States Water Resources, to get them to take over this utility. They have the resour
help the quality of effluent.
onnect the Airview subdivision to their system.
this system. as soon as possible.

ıtility. It would be greatly appreciated if the Division of Water could assist Airview in this endeavor.

t tank that is a part of the main plant. The existing chlorine contact tank is in a location that makes it impossible to g

:OULD ASSIST IN GETTING THIS DONE.

be for the good of everyone involved. When Airview Utilities LLC took over this sewer system it was with the under

ew Utilities in this endeavor.
tank to take samples. There will be results for August.

ıt pump had to be repaired and the discharge pipe cleaned out. Also had to repair a crack in the air lift sludge returr
ssary. Repairs have been completed.

; being exceeded for a number of the parameters. This pipe has been plugged. Future lab results should be improv
ent for them to take it over. Also, Airview has been working with the KIA to hopefully secure funds for Elizabethtown

the funding to connect Airview subdivision to the City main.
ardin County to take over the sewer utility in this subdivision.

nt plant. Airview has made many attempts to get one of the local municipalities to take this over and connect it to th
the KPDES permit. On going repairs have been made to the equipment and facilites, but there has been insufficien

s attorney is making every effort to persuade one of the local municipalities to assume control of this utility.
ın out of state company, Central States Water Resources, to get them to take over this utility. They have the resour
help the quality of effluent.
onnect the Airview subdivision to their system.
this system. as soon as possible.

ıtility. It would be greatly appreciated if the Division of Water could assist Airview in this endeavor.

t tank that is a part of the main plant. The existing chlorine contact tank is in a location that makes it impossible to g

:OULD ASSIST IN GETTING THIS DONE.

be for the good of everyone involved. When Airview Utilities LLC took over this sewer system it was with the under

ew Utilities in this endeavor.
tank to take samples. There will be results for August.

ıt pump had to be repaired and the discharge pipe cleaned out. Also had to repair a crack in the air lift sludge returr
ssary. Repairs have been completed.

; being exceeded for a number of the parameters. This pipe has been plugged. Future lab results should be improv
ent for them to take it over. Also, Airview has been working with the KIA to hopefully secure funds for Elizabethtown

the funding to connect Airview subdivision to the City main.
ardin County to take over the sewer utility in this subdivision.

nt plant. Airview has made many attempts to get one of the local municipalities to take this over and connect it to th
the KPDES permit. On going repairs have been made to the equipment and facilites, but there has been insufficien

s attorney is making every effort to persuade one of the local municipalities to assume control of this utility.
ın out of state company, Central States Water Resources, to get them to take over this utility. They have the resour
help the quality of effluent.
onnect the Airview subdivision to their system.
this system. as soon as possible.

ıtility. It would be greatly appreciated if the Division of Water could assist Airview in this endeavor.

t tank that is a part of the main plant. The existing chlorine contact tank is in a location that makes it impossible to g

:OULD ASSIST IN GETTING THIS DONE.

be for the good of everyone involved. When Airview Utilities LLC took over this sewer system it was with the under

ew Utilities in this endeavor.
tank to take samples. There will be results for August.

ıt pump had to be repaired and the discharge pipe cleaned out. Also had to repair a crack in the air lift sludge returr
ssary. Repairs have been completed.

; being exceeded for a number of the parameters. This pipe has been plugged. Future lab results should be improv
ent for them to take it over. Also, Airview has been working with the KIA to hopefully secure funds for Elizabethtown

the funding to connect Airview subdivision to the City main.
ardin County to take over the sewer utility in this subdivision.

nt plant. Airview has made many attempts to get one of the local municipalities to take this over and connect it to th
the KPDES permit. On going repairs have been made to the equipment and facilites, but there has been insufficien

s attorney is making every effort to persuade one of the local municipalities to assume control of this utility.
ın out of state company, Central States Water Resources, to get them to take over this utility. They have the resour
help the quality of effluent.
onnect the Airview subdivision to their system.
this system. as soon as possible.

ıtility. It would be greatly appreciated if the Division of Water could assist Airview in this endeavor.

t tank that is a part of the main plant. The existing chlorine contact tank is in a location that makes it impossible to g

:OULD ASSIST IN GETTING THIS DONE.

be for the good of everyone involved. When Airview Utilities LLC took over this sewer system it was with the under

ew Utilities in this endeavor.
tank to take samples. There will be results for August.

ıt pump had to be repaired and the discharge pipe cleaned out. Also had to repair a crack in the air lift sludge returr
ssary. Repairs have been completed.

; being exceeded for a number of the parameters. This pipe has been plugged. Future lab results should be improv
ent for them to take it over. Also, Airview has been working with the KIA to hopefully secure funds for Elizabethtown

the funding to connect Airview subdivision to the City main.
ardin County to take over the sewer utility in this subdivision.

nt plant. Airview has made many attempts to get one of the local municipalities to take this over and connect it to th
the KPDES permit. On going repairs have been made to the equipment and facilites, but there has been insufficien

s attorney is making every effort to persuade one of the local municipalities to assume control of this utility.
ın out of state company, Central States Water Resources, to get them to take over this utility. They have the resour
help the quality of effluent.
onnect the Airview subdivision to their system.
this system. as soon as possible.

ıtility. It would be greatly appreciated if the Division of Water could assist Airview in this endeavor.

t tank that is a part of the main plant. The existing chlorine contact tank is in a location that makes it impossible to g

tank to take samples. There will be results for August.

ıt pump had to be repaired and the discharge pipe cleaned out. Also had to repair a crack in the air lift sludge returr

ent for them to take it over. Also, Airview has been working with the KIA to hopefully secure funds for Elizabethtown

nt plant. Airview has made many attempts to get one of the local municipalities to take this over and connect it to th
the KPDES permit. On going repairs have been made to the equipment and facilites, but there has been insufficien

s attorney is making every effort to persuade one of the local municipalities to assume control of this utility.
l help the quality of effluent.
this system. as soon as possible.

utility. It would be greatly appreciated if the Division of Water could assist Airview in this endeavor.

tank to take samples. There will be results for August.

ıt pump had to be repaired and the discharge pipe cleaned out. Also had to repair a crack in the air lift sludge returr

ent for them to take it over. Also, Airview has been working with the KIA to hopefully secure funds for Elizabethtown

nt plant. Airview has made many attempts to get one of the local municipalities to take this over and connect it to th
the KPDES permit. On going repairs have been made to the equipment and facilites, but there has been insufficien

s attorney is making every effort to persuade one of the local municipalities to assume control of this utility.
l help the quality of effluent.
this system. as soon as possible.

utility. It would be greatly appreciated if the Division of Water could assist Airview in this endeavor.

tank to take samples. There will be results for August.

ıt pump had to be repaired and the discharge pipe cleaned out. Also had to repair a crack in the air lift sludge returr

ınt for them to take it over. Also, Airview has been working with the KIA to hopefully secure funds for Elizabethtown

nt plant. Airview has made many attempts to get one of the local municipalities to take this over and connect it to th
the KPDES permit. On going repairs have been made to the equipment and facilites, but there has been insufficien

s attorney is making every effort to persuade one of the local municipalities to assume control of this utility.
l help the quality of effluent.
this system. as soon as possible.

ıtility. It would be greatly appreciated if the Division of Water could assist Airview in this endeavor.

tank to take samples. There will be results for August.

ıt pump had to be repaired and the discharge pipe cleaned out. Also had to repair a crack in the air lift sludge returr

ınt for them to take it over. Also, Airview has been working with the KIA to hopefully secure funds for Elizabethtown

nt plant. Airview has made many attempts to get one of the local municipalities to take this over and connect it to th
the KPDES permit. On going repairs have been made to the equipment and facilites, but there has been insufficien

s attorney is making every effort to persuade one of the local municipalities to assume control of this utility.
l help the quality of effluent.
this system. as soon as possible.

ıtility. It would be greatly appreciated if the Division of Water could assist Airview in this endeavor.

:OULD ASSIST IN GETTING THIS DONE.
be for the good of everyone involved. When Airview Utilities LLC took over this sewer system it was with the under

ew Utilities in this endeavor.

;sary. Repairs have been completed.

; being exceeded for a number of the parameters. This pipe has been plugged. Future lab results should be improv

the funding to connect Airview subdivision to the City main.
ardin County to take over the sewer utility in this subdivision.
ın out of state company, Central States Water Resources, to get them to take over this utility. They have the resour
)nnect the Airview subdivision to their system.

t tank that is a part of the main plant. The existing chlorine contact tank is in a location that makes it impossible to g

:OULD ASSIST IN GETTING THIS DONE.
be for the good of everyone involved. When Airview Utilities LLC took over this sewer system it was with the under

ew Utilities in this endeavor.

;sary. Repairs have been completed.

; being exceeded for a number of the parameters. This pipe has been plugged. Future lab results should be improv

the funding to connect Airview subdivision to the City main.
ardin County to take over the sewer utility in this subdivision.
ın out of state company, Central States Water Resources, to get them to take over this utility. They have the resour
)nnect the Airview subdivision to their system.

t tank that is a part of the main plant. The existing chlorine contact tank is in a location that makes it impossible to g

COULD ASSIST IN GETTING THIS DONE.
be for the good of everyone involved. When Airview Utilities LLC took over this sewer system it was with the under

ew Utilities in this endeavor.

sary. Repairs have been completed.

being exceeded for a number of the parameters. This pipe has been plugged. Future lab results should be improv

the funding to connect Airview subdivision to the City main.
ardin County to take over the sewer utility in this subdivision.
n out of state company, Central States Water Resources, to get them to take over this utility. They have the resour
nnect the Airview subdivision to their system.

t tank that is a part of the main plant. The existing chlorine contact tank is in a location that makes it impossible to g

COULD ASSIST IN GETTING THIS DONE.
be for the good of everyone involved. When Airview Utilities LLC took over this sewer system it was with the under

ew Utilities in this endeavor.

sary. Repairs have been completed.

being exceeded for a number of the parameters. This pipe has been plugged. Future lab results should be improv

the funding to connect Airview subdivision to the City main.
ardin County to take over the sewer utility in this subdivision.
n out of state company, Central States Water Resources, to get them to take over this utility. They have the resour
nnect the Airview subdivision to their system.

t tank that is a part of the main plant. The existing chlorine contact tank is in a location that makes it impossible to g

COULD ASSIST IN GETTING THIS DONE.

be for the good of everyone involved. When Airview Utilities LLC took over this sewer system it was with the under

ew Utilities in this endeavor.
tank to take samples. There will be results for August.

t pump had to be repaired and the discharge pipe cleaned out. Also had to repair a crack in the air lift sludge returr
sary. Repairs have been completed.

being exceeded for a number of the parameters. This pipe has been plugged. Future lab results should be improv
nt for them to take it over. Also, Airview has been working with the KIA to hopefully secure funds for Elizabethtown

the funding to connect Airview subdivision to the City main.
ardin County to take over the sewer utility in this subdivision.

nt plant. Airview has made many attempts to get one of the local municipalities to take this over and connect it to th
the KPDES permit. On going repairs have been made to the equipment and facilites, but there has been insufficien

attorney is making every effort to persuade one of the local municipalities to assume control of this utility.
n out of state company, Central States Water Resources, to get them to take over this utility. They have the resour
help the quality of effluent.
onnect the Airview subdivision to their system.
this system. as soon as possible.

tility. It would be greatly appreciated if the Division of Water could assist Airview in this endeavor.

t tank that is a part of the main plant. The existing chlorine contact tank is in a location that makes it impossible to g

COULD ASSIST IN GETTING THIS DONE.

be for the good of everyone involved. When Airview Utilities LLC took over this sewer system it was with the under

ew Utilities in this endeavor.
tank to take samples. There will be results for August.

t pump had to be repaired and the discharge pipe cleaned out. Also had to repair a crack in the air lift sludge returr
sary. Repairs have been completed.

being exceeded for a number of the parameters. This pipe has been plugged. Future lab results should be improv
nt for them to take it over. Also, Airview has been working with the KIA to hopefully secure funds for Elizabethtown

the funding to connect Airview subdivision to the City main.
ardin County to take over the sewer utility in this subdivision.

nt plant. Airview has made many attempts to get one of the local municipalities to take this over and connect it to th
the KPDES permit. On going repairs have been made to the equipment and facilites, but there has been insufficien

attorney is making every effort to persuade one of the local municipalities to assume control of this utility.
n out of state company, Central States Water Resources, to get them to take over this utility. They have the resour
help the quality of effluent.
onnect the Airview subdivision to their system.
this system. as soon as possible.

tility. It would be greatly appreciated if the Division of Water could assist Airview in this endeavor.

t tank that is a part of the main plant. The existing chlorine contact tank is in a location that makes it impossible to g

COULD ASSIST IN GETTING THIS DONE.

be for the good of everyone involved. When Airview Utilities LLC took over this sewer system it was with the under

ew Utilities in this endeavor.
tank to take samples. There will be results for August.

t pump had to be repaired and the discharge pipe cleaned out. Also had to repair a crack in the air lift sludge returr
sary. Repairs have been completed.

being exceeded for a number of the parameters. This pipe has been plugged. Future lab results should be improv
nt for them to take it over. Also, Airview has been working with the KIA to hopefully secure funds for Elizabethtown

the funding to connect Airview subdivision to the City main.
ardin County to take over the sewer utility in this subdivision.

nt plant. Airview has made many attempts to get one of the local municipalities to take this over and connect it to th
the KPDES permit. On going repairs have been made to the equipment and facilites, but there has been insufficien

attorney is making every effort to persuade one of the local municipalities to assume control of this utility.
n out of state company, Central States Water Resources, to get them to take over this utility. They have the resour
help the quality of effluent.
onnect the Airview subdivision to their system.
this system. as soon as possible.

tility. It would be greatly appreciated if the Division of Water could assist Airview in this endeavor.

t tank that is a part of the main plant. The existing chlorine contact tank is in a location that makes it impossible to g

COULD ASSIST IN GETTING THIS DONE.

be for the good of everyone involved. When Airview Utilities LLC took over this sewer system it was with the under

ew Utilities in this endeavor.
tank to take samples. There will be results for August.

t pump had to be repaired and the discharge pipe cleaned out. Also had to repair a crack in the air lift sludge returr
sary. Repairs have been completed.

being exceeded for a number of the parameters. This pipe has been plugged. Future lab results should be improv
nt for them to take it over. Also, Airview has been working with the KIA to hopefully secure funds for Elizabethtown

the funding to connect Airview subdivision to the City main.
ardin County to take over the sewer utility in this subdivision.

nt plant. Airview has made many attempts to get one of the local municipalities to take this over and connect it to th
the KPDES permit. On going repairs have been made to the equipment and facilites, but there has been insufficien

attorney is making every effort to persuade one of the local municipalities to assume control of this utility.
n out of state company, Central States Water Resources, to get them to take over this utility. They have the resour
help the quality of effluent.
onnect the Airview subdivision to their system.
this system. as soon as possible.

tility. It would be greatly appreciated if the Division of Water could assist Airview in this endeavor.

t tank that is a part of the main plant. The existing chlorine contact tank is in a location that makes it impossible to g

COULD ASSIST IN GETTING THIS DONE.

be for the good of everyone involved. When Airview Utilities LLC took over this sewer system it was with the under

ew Utilities in this endeavor.
tank to take samples. There will be results for August.

t pump had to be repaired and the discharge pipe cleaned out. Also had to repair a crack in the air lift sludge returr
sary. Repairs have been completed.

being exceeded for a number of the parameters. This pipe has been plugged. Future lab results should be improv
nt for them to take it over. Also, Airview has been working with the KIA to hopefully secure funds for Elizabethtown

the funding to connect Airview subdivision to the City main.
ardin County to take over the sewer utility in this subdivision.

nt plant. Airview has made many attempts to get one of the local municipalities to take this over and connect it to th
the KPDES permit. On going repairs have been made to the equipment and facilites, but there has been insufficien

attorney is making every effort to persuade one of the local municipalities to assume control of this utility.
n out of state company, Central States Water Resources, to get them to take over this utility. They have the resour
help the quality of effluent.
onnect the Airview subdivision to their system.
this system. as soon as possible.

tility. It would be greatly appreciated if the Division of Water could assist Airview in this endeavor.

t tank that is a part of the main plant. The existing chlorine contact tank is in a location that makes it impossible to g

COULD ASSIST IN GETTING THIS DONE.

be for the good of everyone involved. When Airview Utilities LLC took over this sewer system it was with the under

ew Utilities in this endeavor.
tank to take samples. There will be results for August.

t pump had to be repaired and the discharge pipe cleaned out. Also had to repair a crack in the air lift sludge returr
sary. Repairs have been completed.

being exceeded for a number of the parameters. This pipe has been plugged. Future lab results should be improv
nt for them to take it over. Also, Airview has been working with the KIA to hopefully secure funds for Elizabethtown

the funding to connect Airview subdivision to the City main.
ardin County to take over the sewer utility in this subdivision.

nt plant. Airview has made many attempts to get one of the local municipalities to take this over and connect it to th
the KPDES permit. On going repairs have been made to the equipment and facilites, but there has been insufficien

attorney is making every effort to persuade one of the local municipalities to assume control of this utility.
n out of state company, Central States Water Resources, to get them to take over this utility. They have the resour
help the quality of effluent.
onnect the Airview subdivision to their system.
this system. as soon as possible.

tility. It would be greatly appreciated if the Division of Water could assist Airview in this endeavor.

t tank that is a part of the main plant. The existing chlorine contact tank is in a location that makes it impossible to g

COULD ASSIST IN GETTING THIS DONE.

be for the good of everyone involved. When Airview Utilities LLC took over this sewer system it was with the under

ew Utilities in this endeavor.
tank to take samples. There will be results for August.

t pump had to be repaired and the discharge pipe cleaned out. Also had to repair a crack in the air lift sludge returr
sary. Repairs have been completed.

being exceeded for a number of the parameters. This pipe has been plugged. Future lab results should be improv
nt for them to take it over. Also, Airview has been working with the KIA to hopefully secure funds for Elizabethtown

the funding to connect Airview subdivision to the City main.
ardin County to take over the sewer utility in this subdivision.

nt plant. Airview has made many attempts to get one of the local municipalities to take this over and connect it to th
the KPDES permit. On going repairs have been made to the equipment and facilites, but there has been insufficien

attorney is making every effort to persuade one of the local municipalities to assume control of this utility.
n out of state company, Central States Water Resources, to get them to take over this utility. They have the resour
help the quality of effluent.
onnect the Airview subdivision to their system.
this system. as soon as possible.

tility. It would be greatly appreciated if the Division of Water could assist Airview in this endeavor.

t tank that is a part of the main plant. The existing chlorine contact tank is in a location that makes it impossible to g

COULD ASSIST IN GETTING THIS DONE.

be for the good of everyone involved. When Airview Utilities LLC took over this sewer system it was with the under

ew Utilities in this endeavor.
tank to take samples. There will be results for August.

t pump had to be repaired and the discharge pipe cleaned out. Also had to repair a crack in the air lift sludge returr
sary. Repairs have been completed.

being exceeded for a number of the parameters. This pipe has been plugged. Future lab results should be improv
nt for them to take it over. Also, Airview has been working with the KIA to hopefully secure funds for Elizabethtown

the funding to connect Airview subdivision to the City main.
ardin County to take over the sewer utility in this subdivision.

nt plant. Airview has made many attempts to get one of the local municipalities to take this over and connect it to th
the KPDES permit. On going repairs have been made to the equipment and facilites, but there has been insufficien

attorney is making every effort to persuade one of the local municipalities to assume control of this utility.
n out of state company, Central States Water Resources, to get them to take over this utility. They have the resour
help the quality of effluent.
onnect the Airview subdivision to their system.
this system. as soon as possible.

tility. It would be greatly appreciated if the Division of Water could assist Airview in this endeavor.

t tank that is a part of the main plant. The existing chlorine contact tank is in a location that makes it impossible to g

COULD ASSIST IN GETTING THIS DONE.

be for the good of everyone involved. When Airview Utilities LLC took over this sewer system it was with the under

ew Utilities in this endeavor.
tank to take samples. There will be results for August.

t pump had to be repaired and the discharge pipe cleaned out. Also had to repair a crack in the air lift sludge returr
sary. Repairs have been completed.

being exceeded for a number of the parameters. This pipe has been plugged. Future lab results should be improv
nt for them to take it over. Also, Airview has been working with the KIA to hopefully secure funds for Elizabethtown

the funding to connect Airview subdivision to the City main.
ardin County to take over the sewer utility in this subdivision.

nt plant. Airview has made many attempts to get one of the local municipalities to take this over and connect it to th
the KPDES permit. On going repairs have been made to the equipment and facilites, but there has been insufficien

attorney is making every effort to persuade one of the local municipalities to assume control of this utility.
n out of state company, Central States Water Resources, to get them to take over this utility. They have the resour
help the quality of effluent.
onnect the Airview subdivision to their system.
this system. as soon as possible.

tility. It would be greatly appreciated if the Division of Water could assist Airview in this endeavor.

t tank that is a part of the main plant. The existing chlorine contact tank is in a location that makes it impossible to g

COULD ASSIST IN GETTING THIS DONE.

be for the good of everyone involved. When Airview Utilities LLC took over this sewer system it was with the under

ew Utilities in this endeavor.
tank to take samples. There will be results for August.

t pump had to be repaired and the discharge pipe cleaned out. Also had to repair a crack in the air lift sludge returr
sary. Repairs have been completed.

being exceeded for a number of the parameters. This pipe has been plugged. Future lab results should be improv
nt for them to take it over. Also, Airview has been working with the KIA to hopefully secure funds for Elizabethtown

the funding to connect Airview subdivision to the City main.
ardin County to take over the sewer utility in this subdivision.

nt plant. Airview has made many attempts to get one of the local municipalities to take this over and connect it to th
the KPDES permit. On going repairs have been made to the equipment and facilites, but there has been insufficien

attorney is making every effort to persuade one of the local municipalities to assume control of this utility.
n out of state company, Central States Water Resources, to get them to take over this utility. They have the resour
help the quality of effluent.
onnect the Airview subdivision to their system.
this system. as soon as possible.

tility. It would be greatly appreciated if the Division of Water could assist Airview in this endeavor.

t tank that is a part of the main plant. The existing chlorine contact tank is in a location that makes it impossible to g

standing that it would be short term.

ı pipe.8/25/15 - The air lift sludge return pipe was found to clogged up tight and had to be worked on to get it workin

ved.
to use to make the connection to their trunk sewers.

ıeir trunck line. There are on going discussions with the City of Elizabethtown. Airview has also requested assistan
ıt revenue to make all of the needed repairs and upgrades. Local agencies have been contacted, on several occasi

ces necessary to make improvements to the system.

get to to clean. Note: Airview continues to communicate with the local municipalities in Elizabethtown and Hardin C

standing that it would be short term.

ı pipe.8/25/15 - The air lift sludge return pipe was found to clogged up tight and had to be worked on to get it workin

ved.
to use to make the connection to their trunk sewers.

ıeir trunck line. There are on going discussions with the City of Elizabethtown. Airview has also requested assistan
ıt revenue to make all of the needed repairs and upgrades. Local agencies have been contacted, on several occasi

ces necessary to make improvements to the system.

get to to clean. Note: Airview continues to communicate with the local municipalities in Elizabethtown and Hardin C

standing that it would be short term.

ı pipe.8/25/15 - The air lift sludge return pipe was found to clogged up tight and had to be worked on to get it workin

ved.
to use to make the connection to their trunk sewers.

ıeir trunck line. There are on going discussions with the City of Elizabethtown. Airview has also requested assistan
ıt revenue to make all of the needed repairs and upgrades. Local agencies have been contacted, on several occasi

ces necessary to make improvements to the system.

get to to clean. Note: Airview continues to communicate with the local municipalities in Elizabethtown and Hardin C

standing that it would be short term.

ı pipe.8/25/15 - The air lift sludge return pipe was found to clogged up tight and had to be worked on to get it workin

ved.
to use to make the connection to their trunk sewers.

ıeir trunck line. There are on going discussions with the City of Elizabethtown. Airview has also requested assistan
ıt revenue to make all of the needed repairs and upgrades. Local agencies have been contacted, on several occasi

ces necessary to make improvements to the system.

get to to clean. Note: Airview continues to communicate with the local municipalities in Elizabethtown and Hardin C

standing that it would be short term.

ı pipe.8/25/15 - The air lift sludge return pipe was found to clogged up tight and had to be worked on to get it workin

ved.
to use to make the connection to their trunk sewers.

ıeir trunck line. There are on going discussions with the City of Elizabethtown. Airview has also requested assistan
ıt revenue to make all of the needed repairs and upgrades. Local agencies have been contacted, on several occasi

ces necessary to make improvements to the system.

get to to clean. Note: Airview continues to communicate with the local municipalities in Elizabethtown and Hardin C

standing that it would be short term.

ı pipe.8/25/15 - The air lift sludge return pipe was found to clogged up tight and had to be worked on to get it workin

ved.
to use to make the connection to their trunk sewers.

ıeir trunck line. There are on going discussions with the City of Elizabethtown. Airview has also requested assistan
ıt revenue to make all of the needed repairs and upgrades. Local agencies have been contacted, on several occasi

ces necessary to make improvements to the system.

get to to clean. Note: Airview continues to communicate with the local municipalities in Elizabethtown and Hardin C

standing that it would be short term.

ı pipe.8/25/15 - The air lift sludge return pipe was found to clogged up tight and had to be worked on to get it workin

ved.
to use to make the connection to their trunk sewers.

ıeir trunck line. There are on going discussions with the City of Elizabethtown. Airview has also requested assistan
ıt revenue to make all of the needed repairs and upgrades. Local agencies have been contacted, on several occasi

ces necessary to make improvements to the system.

get to to clean. Note: Airview continues to communicate with the local municipalities in Elizabethtown and Hardin C

ı pipe.8/25/15 - The air lift sludge return pipe was found to clogged up tight and had to be worked on to get it workin

to use to make the connection to their trunk sewers.

ıeir trunck line. There are on going discussions with the City of Elizabethtown. Airview has also requested assistan
ıt revenue to make all of the needed repairs and upgrades. Local agencies have been contacted, on several occasi

ı pipe.8/25/15 - The air lift sludge return pipe was found to clogged up tight and had to be worked on to get it workin

to use to make the connection to their trunk sewers.

ıeir trunck line. There are on going discussions with the City of Elizabethtown. Airview has also requested assistan
ıt revenue to make all of the needed repairs and upgrades. Local agencies have been contacted, on several occasi

ı pipe.8/25/15 - The air lift sludge return pipe was found to clogged up tight and had to be worked on to get it workin

to use to make the connection to their trunk sewers.

ıeir trunck line. There are on going discussions with the City of Elizabethtown. Airview has also requested assistan
ıt revenue to make all of the needed repairs and upgrades. Local agencies have been contacted, on several occasi

ı pipe.8/25/15 - The air lift sludge return pipe was found to clogged up tight and had to be worked on to get it workin

to use to make the connection to their trunk sewers.

ıeir trunck line. There are on going discussions with the City of Elizabethtown. Airview has also requested assistan
ıt revenue to make all of the needed repairs and upgrades. Local agencies have been contacted, on several occasi

standing that it would be short term.

ved.

rces necessary to make improvements to the system.

get to to clean. Note: Airview continues to communicate with the local municipalities in Elizabethtown and Hardin C

standing that it would be short term.

ved.

rces necessary to make improvements to the system.

get to to clean. Note: Airview continues to communicate with the local municipalities in Elizabethtown and Hardin C

standing that it would be short term.

ved.

rces necessary to make improvements to the system.

get to to clean. Note: Airview continues to communicate with the local municipalities in Elizabethtown and Hardin C

standing that it would be short term.

ved.

rces necessary to make improvements to the system.

get to to clean. Note: Airview continues to communicate with the local municipalities in Elizabethtown and Hardin C

standing that it would be short term.

n pipe.8/25/15 - The air lift sludge return pipe was found to clogged up tight and had to be worked on to get it workin

ved.
 to use to make the connection to their trunk sewers.

heir trunck line. There are on going discussions with the City of Elizabethtown. Airview has also requested assistan
nt revenue to make all of the needed repairs and upgrades. Local agencies have been contacted, on several occasi

rces necessary to make improvements to the system.

get to to clean. Note: Airview continues to communicate with the local municipalities in Elizabethtown and Hardin C

standing that it would be short term.

n pipe.8/25/15 - The air lift sludge return pipe was found to clogged up tight and had to be worked on to get it workin

ved.
 to use to make the connection to their trunk sewers.

heir trunck line. There are on going discussions with the City of Elizabethtown. Airview has also requested assistan
nt revenue to make all of the needed repairs and upgrades. Local agencies have been contacted, on several occasi

rces necessary to make improvements to the system.

get to to clean. Note: Airview continues to communicate with the local municipalities in Elizabethtown and Hardin C

standing that it would be short term.

n pipe.8/25/15 - The air lift sludge return pipe was found to clogged up tight and had to be worked on to get it workin

ved.
 to use to make the connection to their trunk sewers.

heir trunck line. There are on going discussions with the City of Elizabethtown. Airview has also requested assistan
nt revenue to make all of the needed repairs and upgrades. Local agencies have been contacted, on several occasi

rces necessary to make improvements to the system.

get to to clean. Note: Airview continues to communicate with the local municipalities in Elizabethtown and Hardin C

standing that it would be short term.

n pipe.8/25/15 - The air lift sludge return pipe was found to clogged up tight and had to be worked on to get it workin

ved.
 to use to make the connection to their trunk sewers.

heir trunck line. There are on going discussions with the City of Elizabethtown. Airview has also requested assistan
nt revenue to make all of the needed repairs and upgrades. Local agencies have been contacted, on several occasi

rces necessary to make improvements to the system.

get to to clean. Note: Airview continues to communicate with the local municipalities in Elizabethtown and Hardin C

standing that it would be short term.

n pipe.8/25/15 - The air lift sludge return pipe was found to clogged up tight and had to be worked on to get it workin

ved.
 to use to make the connection to their trunk sewers.

heir trunck line. There are on going discussions with the City of Elizabethtown. Airview has also requested assistan
nt revenue to make all of the needed repairs and upgrades. Local agencies have been contacted, on several occasi

rces necessary to make improvements to the system.

get to to clean. Note: Airview continues to communicate with the local municipalities in Elizabethtown and Hardin C

standing that it would be short term.

n pipe.8/25/15 - The air lift sludge return pipe was found to clogged up tight and had to be worked on to get it workin

ved.
 to use to make the connection to their trunk sewers.

heir trunck line. There are on going discussions with the City of Elizabethtown. Airview has also requested assistan
nt revenue to make all of the needed repairs and upgrades. Local agencies have been contacted, on several occasi

rces necessary to make improvements to the system.

get to to clean. Note: Airview continues to communicate with the local municipalities in Elizabethtown and Hardin C

standing that it would be short term.

n pipe.8/25/15 - The air lift sludge return pipe was found to clogged up tight and had to be worked on to get it workin

ved.
 to use to make the connection to their trunk sewers.

heir trunck line. There are on going discussions with the City of Elizabethtown. Airview has also requested assistan
nt revenue to make all of the needed repairs and upgrades. Local agencies have been contacted, on several occasi

rces necessary to make improvements to the system.

get to to clean. Note: Airview continues to communicate with the local municipalities in Elizabethtown and Hardin C

standing that it would be short term.

n pipe.8/25/15 - The air lift sludge return pipe was found to clogged up tight and had to be worked on to get it workin

ved.
 to use to make the connection to their trunk sewers.

heir trunck line. There are on going discussions with the City of Elizabethtown. Airview has also requested assistan
nt revenue to make all of the needed repairs and upgrades. Local agencies have been contacted, on several occasi

rces necessary to make improvements to the system.

get to to clean. Note: Airview continues to communicate with the local municipalities in Elizabethtown and Hardin C

standing that it would be short term.

n pipe.8/25/15 - The air lift sludge return pipe was found to clogged up tight and had to be worked on to get it workin

ved.
 to use to make the connection to their trunk sewers.

heir trunck line. There are on going discussions with the City of Elizabethtown. Airview has also requested assistan
nt revenue to make all of the needed repairs and upgrades. Local agencies have been contacted, on several occasi

rces necessary to make improvements to the system.

get to to clean. Note: Airview continues to communicate with the local municipalities in Elizabethtown and Hardin C

standing that it would be short term.

n pipe.8/25/15 - The air lift sludge return pipe was found to clogged up tight and had to be worked on to get it workin

ved.
 to use to make the connection to their trunk sewers.

heir trunck line. There are on going discussions with the City of Elizabethtown. Airview has also requested assistan
nt revenue to make all of the needed repairs and upgrades. Local agencies have been contacted, on several occasi

rces necessary to make improvements to the system.

get to to clean. Note: Airview continues to communicate with the local municipalities in Elizabethtown and Hardin C

g again.With all these problems during the month of August it was very difficult to produce an acceptable effluent.Tł

ce from the DOW to help make this happen.
ions and requested to take ownership of this facility.

ounty for the purpose of connecting Airview subdivision to an available sewer trunk line.

g again.With all these problems during the month of August it was very difficult to produce an acceptable effluent.Tl

ce from the DOW to help make this happen.
ions and requested to take ownership of this facility.

ounty for the purpose of connecting Airview subdivision to an available sewer trunk line.

g again.With all these problems during the month of August it was very difficult to produce an acceptable effluent.Tl

ce from the DOW to help make this happen.
ions and requested to take ownership of this facility.

ounty for the purpose of connecting Airview subdivision to an available sewer trunk line.

g again.With all these problems during the month of August it was very difficult to produce an acceptable effluent.Tl

ce from the DOW to help make this happen.
ions and requested to take ownership of this facility.

ounty for the purpose of connecting Airview subdivision to an available sewer trunk line.

g again.With all these problems during the month of August it was very difficult to produce an acceptable effluent.Tl

ce from the DOW to help make this happen.
ions and requested to take ownership of this facility.

ounty for the purpose of connecting Airview subdivision to an available sewer trunk line.

g again.With all these problems during the month of August it was very difficult to produce an acceptable effluent.Tl

ce from the DOW to help make this happen.
ions and requested to take ownership of this facility.

ounty for the purpose of connecting Airview subdivision to an available sewer trunk line.

g again.With all these problems during the month of August it was very difficult to produce an acceptable effluent.Tl

ce from the DOW to help make this happen.
ions and requested to take ownership of this facility.

ounty for the purpose of connecting Airview subdivision to an available sewer trunk line.

g again.With all these problems during the month of August it was very difficult to produce an acceptable effluent.Tl

ce from the DOW to help make this happen.
ions and requested to take ownership of this facility.

g again.With all these problems during the month of August it was very difficult to produce an acceptable effluent.Tl

ce from the DOW to help make this happen.
ions and requested to take ownership of this facility.

g again.With all these problems during the month of August it was very difficult to produce an acceptable effluent.Tł

ce from the DOW to help make this happen.
ions and requested to take ownership of this facility.

g again.With all these problems during the month of August it was very difficult to produce an acceptable effluent.Tł

ce from the DOW to help make this happen.
ions and requested to take ownership of this facility.

ounty for the purpose of connecting Airview subdivision to an available sewer trunk line.

ounty for the purpose of connecting Airview subdivision to an available sewer trunk line.

ounty for the purpose of connecting Airview subdivision to an available sewer trunk line.

ounty for the purpose of connecting Airview subdivision to an available sewer trunk line.

g again.With all these problems during the month of August it was very difficult to produce an acceptable effluent.Tl

ce from the DOW to help make this happen.
ions and requested to take ownership of this facility.

ounty for the purpose of connecting Airview subdivision to an available sewer trunk line.

g again.With all these problems during the month of August it was very difficult to produce an acceptable effluent.Tl

ce from the DOW to help make this happen.
ions and requested to take ownership of this facility.

ounty for the purpose of connecting Airview subdivision to an available sewer trunk line.

g again.With all these problems during the month of August it was very difficult to produce an acceptable effluent.Tl

ce from the DOW to help make this happen.
ions and requested to take ownership of this facility.

ounty for the purpose of connecting Airview subdivision to an available sewer trunk line.

g again.With all these problems during the month of August it was very difficult to produce an acceptable effluent.Tl

ce from the DOW to help make this happen.
ions and requested to take ownership of this facility.

ounty for the purpose of connecting Airview subdivision to an available sewer trunk line.

g again.With all these problems during the month of August it was very difficult to produce an acceptable effluent.Tl

ce from the DOW to help make this happen.
ions and requested to take ownership of this facility.

ounty for the purpose of connecting Airview subdivision to an available sewer trunk line.

g again.With all these problems during the month of August it was very difficult to produce an acceptable effluent.Tl

ce from the DOW to help make this happen.
ions and requested to take ownership of this facility.

ounty for the purpose of connecting Airview subdivision to an available sewer trunk line.

g again.With all these problems during the month of August it was very difficult to produce an acceptable effluent.Tl

ce from the DOW to help make this happen.
ions and requested to take ownership of this facility.

ounty for the purpose of connecting Airview subdivision to an available sewer trunk line.

g again.With all these problems during the month of August it was very difficult to produce an acceptable effluent.Tl

ce from the DOW to help make this happen.
ions and requested to take ownership of this facility.

ounty for the purpose of connecting Airview subdivision to an available sewer trunk line.

g again.With all these problems during the month of August it was very difficult to produce an acceptable effluent.Tl

ce from the DOW to help make this happen.
ions and requested to take ownership of this facility.

ounty for the purpose of connecting Airview subdivision to an available sewer trunk line.

g again.With all these problems during the month of August it was very difficult to produce an acceptable effluent.Tl

ce from the DOW to help make this happen.
ions and requested to take ownership of this facility.

ounty for the purpose of connecting Airview subdivision to an available sewer trunk line.

his plant is 40 plus years old. It has out lasted its useful life. We are constantly having problems with the plant, as v

his plant is 40 plus years old. It has out lasted its useful life. We are constantly having problems with the plant, as v

his plant is 40 plus years old. It has out lasted its useful life. We are constantly having problems with the plant, as v

his plant is 40 plus years old. It has out lasted its useful life. We are constantly having problems with the plant, as v

his plant is 40 plus years old. It has out lasted its useful life. We are constantly having problems with the plant, as v

his plant is 40 plus years old. It has out lasted its useful life. We are constantly having problems with the plant, as v

his plant is 40 plus years old. It has out lasted its useful life. We are constantly having problems with the plant, as v

his plant is 40 plus years old. It has out lasted its useful life. We are constantly having problems with the plant, as v

his plant is 40 plus years old. It has out lasted its useful life. We are constantly having problems with the plant, as v

his plant is 40 plus years old. It has out lasted its useful life. We are constantly having problems with the plant, as v

his plant is 40 plus years old. It has out lasted its useful life. We are constantly having problems with the plant, as v

his plant is 40 plus years old. It has out lasted its useful life. We are constantly having problems with the plant, as v

his plant is 40 plus years old. It has out lasted its useful life. We are constantly having problems with the plant, as v

his plant is 40 plus years old. It has out lasted its useful life. We are constantly having problems with the plant, as v

his plant is 40 plus years old. It has out lasted its useful life. We are constantly having problems with the plant, as v

his plant is 40 plus years old. It has out lasted its useful life. We are constantly having problems with the plant, as v

his plant is 40 plus years old. It has out lasted its useful life. We are constantly having problems with the plant, as v

his plant is 40 plus years old. It has out lasted its useful life. We are constantly having problems with the plant, as v

his plant is 40 plus years old. It has out lasted its useful life. We are constantly having problems with the plant, as v

his plant is 40 plus years old. It has out lasted its useful life. We are constantly having problems with the plant, as v

his plant is 40 plus years old. It has out lasted its useful life. We are constantly having problems with the plant, as v

well as frequent acts of vandalism. As I understand it there are two municipal trunck sewers with in a mile and one

well as frequent acts of vandalism. As I understand it there are two municipal trunck sewers with in a mile and one

well as frequent acts of vandalism. As I understand it there are two municipal trunck sewers with in a mile and one

well as frequent acts of vandalism. As I understand it there are two municipal trunck sewers with in a mile and one

well as frequent acts of vandalism. As I understand it there are two municipal trunck sewers with in a mile and one

well as frequent acts of vandalism. As I understand it there are two municipal trunck sewers with in a mile and one

well as frequent acts of vandalism. As I understand it there are two municipal trunck sewers with in a mile and one

ɴell as frequent acts of vandalism. As I understand it there are two municipal trunck sewers with in a mile and one

ɴell as frequent acts of vandalism. As I understand it there are two municipal trunck sewers with in a mile and one

well as frequent acts of vandalism. As I understand it there are two municipal trunck sewers with in a mile and one

well as frequent acts of vandalism. As I understand it there are two municipal trunck sewers with in a mile and one

well as frequent acts of vandalism. As I understand it there are two municipal trunck sewers with in a mile and one

well as frequent acts of vandalism. As I understand it there are two municipal trunck sewers with in a mile and one

well as frequent acts of vandalism. As I understand it there are two municipal trunck sewers with in a mile and one

well as frequent acts of vandalism. As I understand it there are two municipal trunck sewers with in a mile and one

well as frequent acts of vandalism. As I understand it there are two municipal trunck sewers with in a mile and one

well as frequent acts of vandalism. As I understand it there are two municipal trunck sewers with in a mile and one

well as frequent acts of vandalism. As I understand it there are two municipal trunck sewers with in a mile and one

well as frequent acts of vandalism. As I understand it there are two municipal trunck sewers with in a mile and one

well as frequent acts of vandalism. As I understand it there are two municipal trunck sewers with in a mile and one

well as frequent acts of vandalism. As I understand it there are two municipal trunck sewers with in a mile and one

of them should connect to

of them should connect to

of them should connect to

of them should connect to

of them should connect to

of them should connect to

of them should connect to

of them should connect to

of them should connect to

of them should connect to

of them should connect to

of them should connect to

of them should connect to

of them should connect to

of them should connect to

of them should connect to

of them should connect to

of them should connect to

of them should connect to

of them should connect to

of them should connect to

Environmental Protection Agency
Integrated Compliance Information System

Version 1.0, modified 08/12/2011
Created Date: 05/02/2011
Last Refresh Date: 11/22/2019

Report Selection Criteri

NPDES ID(s): KY0045390
State Code: KY
Region Code(s):
SIC Code(s):
NAICS Code(s):
Major/Minor Indicator:
County(ies):
Permit Type(s):
Permit Status(es):
Monitoring Period Date Range: 10/01/2014 - 11/
Violation Type: All Data
Parameter Code(s):
State Water Body(ies):

NODI Code	Acceptable?
1	N
2	Y
3	Y
4	Y
5	Y
7	Y
8	N
9	Y
A	Y
B	Y
C	Y
D	N
E	N
F	Y
G	N
H	N
I	Y
J	Y
K	Y
L	N
M	N
N	Y
Q	Y
R	Y
S	Y
V	Y
W	Y
X	N

NODI Desc
Wrong Flow
Operation Shutdown
Special Report Attached
Discharge to Lagoon/Groundwater
Frozen Conditions
No Influent
Other (See Comments)
Conditional Monitoring - Not Required This Period
General Permit Exemption
Below Detection Limit/No Detection
No Discharge
Lost Sample/Data Not Available
Analysis Not Conducted/No Sample
Insufficient Flow for Sampling
Sampling Equipment Failure
Invalid Test
Land Applied
Recycled - Water-Closed System
Natural Disaster
DMR Received but not Entered
Laboratory Error
Not Constructed
Not Quantifiable
Administratively Resolved
Fire Conditions
Weather Related
Dry Lysimeter/Well
Parameter/Value Not Reported

NPDES ID	State Code	Region Code	Permit Name	Permittee Address	Facility Name	County	Major Minor Indicator	Permit Type	Permit Status	Federal Grant Flag	Primary SIC Code	Primary NAICS Code	State Water Body	Lat/Long.Latitude in Decimal Degrees	Lat/Long.Longitude in Decimal Degrees	Limit Set	Param Cd - MLC - Season ID	Parameter	Mon. Loc. Desc.	Limit Type Code
KY0045390	KY	04	Airview WWTF	500 Northwest Plaza Dr Ste 500 St Ann, MO 63074	AIRVIEW WWTF	Hardin	Minor	NPDES Individual Permit	Admin Continued	N	6552	237210	051401020003-MILL CRK BR	37.758333	-85.892222	001-1	00300-1-0	Oxygen, dissolved [DO]	Effluent Gross	ENF
KY0045390	KY	04	Airview WWTF	500 Northwest Plaza Dr Ste 500 St Ann, MO 63074	AIRVIEW WWTF	Hardin	Minor	NPDES Individual Permit	Admin Continued	N	6552	237210	051401020003-MILL CRK BR	37.758333	-85.892222	001-1	00400-1-0	pH	Effluent Gross	ENF
KY0045390	KY	04	Airview WWTF	500 Northwest Plaza Dr Ste 500 St Ann, MO 63074	AIRVIEW WWTF	Hardin	Minor	NPDES Individual Permit	Admin Continued	N	6552	237210	051401020003-MILL CRK BR	37.758333	-85.892222	001-1	00530-1-0	Solids, total suspended	Effluent Gross	ENF
KY0045390	KY	04	Airview WWTF	500 Northwest Plaza Dr Ste 500 St Ann, MO 63074	AIRVIEW WWTF	Hardin	Minor	NPDES Individual Permit	Admin Continued	N	6552	237210	051401020003-MILL CRK BR	37.758333	-85.892222	001-1	00610-1-1	Nitrogen, ammonia total [as N]	Effluent Gross	ENF
KY0045390	KY	04	Airview WWTF	500 Northwest Plaza Dr Ste 500 St Ann, MO 63074	AIRVIEW WWTF	Hardin	Minor	NPDES Individual Permit	Admin Continued	N	6552	237210	051401020003-MILL CRK BR	37.758333	-85.892222	001-1	00610-1-2	Nitrogen, ammonia total [as N]	Effluent Gross	ENF
KY0045390	KY	04	Airview WWTF	500 Northwest Plaza Dr Ste 500 St Ann, MO 63074	AIRVIEW WWTF	Hardin	Minor	NPDES Individual Permit	Admin Continued	N	6552	237210	051401020003-MILL CRK BR	37.758333	-85.892222	001-1	50050-1-0	Flow, in conduit or thru treatment plant	Effluent Gross	ENF
KY0045390	KY	04	Airview WWTF	500 Northwest Plaza Dr Ste 500 St Ann, MO 63074	AIRVIEW WWTF	Hardin	Minor	NPDES Individual Permit	Admin Continued	N	6552	237210	051401020003-MILL CRK BR	37.758333	-85.892222	001-1	50060-1-0	Chlorine, total residual	Effluent Gross	ENF
KY0045390	KY	04	Airview WWTF	500 Northwest Plaza Dr Ste 500 St Ann, MO 63074	AIRVIEW WWTF	Hardin	Minor	NPDES Individual Permit	Admin Continued	N	6552	237210	051401020003-MILL CRK BR	37.758333	-85.892222	001-1	51040-1-0	E. coli	Effluent Gross	ENF
KY0045390	KY	04	Airview WWTF	500 Northwest Plaza Dr Ste 500 St Ann, MO 63074	AIRVIEW WWTF	Hardin	Minor	NPDES Individual Permit	Admin Continued	N	6552	237210	051401020003-MILL CRK BR	37.758333	-85.892222	001-1	80082-1-0	BOD, carbonaceous [5 day, 20 C]	Effluent Gross	ENF

NPDES ID	Permit Name	County Name	Perm Feature ID-Limit Set	Mon. Period End Date	Parameter Desc	Param Cd - MLC - Season ID	Monitoring Location Desc	Worst % exced.	Quantity 1	Q1 DMR Value Unit Short Desc	Quantity 2	Q2 DMR Value Unit Short Desc	Limit Value - Quantity Units	Concentration 1	C1 DMR Value Unit Short Desc	Concentration 2	C2 DMR Value Unit Short Desc	Concentration 3	C3 DMR Value Unit Short Desc	Limit Value - Concentration Units	Effluent Vio. Exists
KY0045390	Airview WWTF	Hardin	001-1	09/30/2019	Oxygen, dissolved [DO]	00300-1-0	Effluent Gross	11						6.2	mg/L					mg/L	Y
KY0045390	Airview WWTF	Hardin	001-1	08/31/2019	Oxygen, dissolved [DO]	00300-1-0	Effluent Gross													mg/L	N
KY0045390	Airview WWTF	Hardin	001-1	07/31/2019	Oxygen, dissolved [DO]	00300-1-0	Effluent Gross													mg/L	N
KY0045390	Airview WWTF	Hardin	001-1	06/30/2019	Oxygen, dissolved [DO]	00300-1-0	Effluent Gross													mg/L	N
KY0045390	Airview WWTF	Hardin	001-1	05/31/2019	Oxygen, dissolved [DO]	00300-1-0	Effluent Gross													mg/L	N
KY0045390	Airview WWTF	Hardin	001-1	04/30/2019	Oxygen, dissolved [DO]	00300-1-0	Effluent Gross													mg/L	N
KY0045390	Airview WWTF	Hardin	001-1	03/31/2019	Oxygen, dissolved [DO]	00300-1-0	Effluent Gross							7.09	mg/L					mg/L	N
KY0045390	Airview WWTF	Hardin	001-1	02/28/2019	Oxygen, dissolved [DO]	00300-1-0	Effluent Gross							7.22	mg/L					mg/L	N
KY0045390	Airview WWTF	Hardin	001-1	01/31/2019	Oxygen, dissolved [DO]	00300-1-0	Effluent Gross							7.04	mg/L					mg/L	N
KY0045390	Airview WWTF	Hardin	001-1	12/31/2018	Oxygen, dissolved [DO]	00300-1-0	Effluent Gross													mg/L	N
KY0045390	Airview WWTF	Hardin	001-1	11/30/2018	Oxygen, dissolved [DO]	00300-1-0	Effluent Gross							7.07	mg/L					mg/L	N
KY0045390	Airview WWTF	Hardin	001-1	10/31/2018	Oxygen, dissolved [DO]	00300-1-0	Effluent Gross							7.04	mg/L					mg/L	N
KY0045390	Airview WWTF	Hardin	001-1	09/30/2018	Oxygen, dissolved [DO]	00300-1-0	Effluent Gross							7.04	mg/L					mg/L	N
KY0045390	Airview WWTF	Hardin	001-1	08/31/2018	Oxygen, dissolved [DO]	00300-1-0	Effluent Gross	3						6.78	mg/L					mg/L	Y
KY0045390	Airview WWTF	Hardin	001-1	07/31/2018	Oxygen, dissolved [DO]	00300-1-0	Effluent Gross	2						6.88	mg/L					mg/L	Y
KY0045390	Airview WWTF	Hardin	001-1	06/30/2018	Oxygen, dissolved [DO]	00300-1-0	Effluent Gross	4						6.74	mg/L					mg/L	Y
KY0045390	Airview WWTF	Hardin	001-1	05/31/2018	Oxygen, dissolved [DO]	00300-1-0	Effluent Gross	2						6.86	mg/L					mg/L	Y
KY0045390	Airview WWTF	Hardin	001-1	04/30/2018	Oxygen, dissolved [DO]	00300-1-0	Effluent Gross	9						6.37	mg/L					mg/L	Y
KY0045390	Airview WWTF	Hardin	001-1	03/31/2018	Oxygen, dissolved [DO]	00300-1-0	Effluent Gross	20						5.62	mg/L					mg/L	Y
KY0045390	Airview WWTF	Hardin	001-1	02/28/2018	Oxygen, dissolved [DO]	00300-1-0	Effluent Gross	4						6.71	mg/L					mg/L	Y
KY0045390	Airview WWTF	Hardin	001-1	01/31/2018	Oxygen, dissolved [DO]	00300-1-0	Effluent Gross							7.25	mg/L					mg/L	N
KY0045390	Airview WWTF	Hardin	001-1	12/31/2017	Oxygen, dissolved [DO]	00300-1-0	Effluent Gross							7.18	mg/L					mg/L	N
KY0045390	Airview WWTF	Hardin	001-1	11/30/2017	Oxygen, dissolved [DO]	00300-1-0	Effluent Gross							7.01	mg/L					mg/L	N
KY0045390	Airview WWTF	Hardin	001-1	10/31/2017	Oxygen, dissolved [DO]	00300-1-0	Effluent Gross	8						6.44	mg/L					mg/L	Y
KY0045390	Airview WWTF	Hardin	001-1	09/30/2017	Oxygen, dissolved [DO]	00300-1-0	Effluent Gross							7.45	mg/L					mg/L	N
KY0045390	Airview WWTF	Hardin	001-1	08/31/2017	Oxygen, dissolved [DO]	00300-1-0	Effluent Gross							7.17	mg/L					mg/L	N
KY0045390	Airview WWTF	Hardin	001-1	07/31/2017	Oxygen, dissolved [DO]	00300-1-0	Effluent Gross							7.09	mg/L					mg/L	N
KY0045390	Airview WWTF	Hardin	001-1	06/30/2017	Oxygen, dissolved [DO]	00300-1-0	Effluent Gross							7.2	mg/L					mg/L	N
KY0045390	Airview WWTF	Hardin	001-1	05/31/2017	Oxygen, dissolved [DO]	00300-1-0	Effluent Gross							7.29	mg/L					mg/L	N
KY0045390	Airview WWTF	Hardin	001-1	04/30/2017	Oxygen, dissolved [DO]	00300-1-0	Effluent Gross							7.63	mg/L					mg/L	N
KY0045390	Airview WWTF	Hardin	001-1	03/31/2017	Oxygen, dissolved [DO]	00300-1-0	Effluent Gross							7.55	mg/L					mg/L	N
KY0045390	Airview WWTF	Hardin	001-1	02/28/2017	Oxygen, dissolved [DO]	00300-1-0	Effluent Gross							7.4	mg/L					mg/L	N
KY0045390	Airview WWTF	Hardin	001-1	01/31/2017	Oxygen, dissolved [DO]	00300-1-0	Effluent Gross	11						6.21	mg/L					mg/L	Y
KY0045390	Airview WWTF	Hardin	001-1	12/31/2016	Oxygen, dissolved [DO]	00300-1-0	Effluent Gross	3						6.79	mg/L					mg/L	Y
KY0045390	Airview WWTF	Hardin	001-1	11/30/2016	Oxygen, dissolved [DO]	00300-1-0	Effluent Gross							7.25	mg/L					mg/L	N
KY0045390	Airview WWTF	Hardin	001-1	10/31/2016	Oxygen, dissolved [DO]	00300-1-0	Effluent Gross	17						5.81	mg/L					mg/L	Y
KY0045390	Airview WWTF	Hardin	001-1	09/30/2016	Oxygen, dissolved [DO]	00300-1-0	Effluent Gross	1						6.91	mg/L					mg/L	Y
KY0045390	Airview WWTF	Hardin	001-1	08/31/2016	Oxygen, dissolved [DO]	00300-1-0	Effluent Gross							7.08	mg/L					mg/L	N
KY0045390	Airview WWTF	Hardin	001-1	07/31/2016	Oxygen, dissolved [DO]	00300-1-0	Effluent Gross	73						1.88	mg/L					mg/L	Y
KY0045390	Airview WWTF	Hardin	001-1	06/30/2016	Oxygen, dissolved [DO]	00300-1-0	Effluent Gross							7.04	mg/L					mg/L	N
KY0045390	Airview WWTF	Hardin	001-1	05/31/2016	Oxygen, dissolved [DO]	00300-1-0	Effluent Gross	65						2.44	mg/L					mg/L	Y
KY0045390	Airview WWTF	Hardin	001-1	04/30/2016	Oxygen, dissolved [DO]	00300-1-0	Effluent Gross	29						4.98	mg/L					mg/L	Y
KY0045390	Airview WWTF	Hardin	001-1	03/31/2016	Oxygen, dissolved [DO]	00300-1-0	Effluent Gross							7.16	mg/L					mg/L	N
KY0045390	Airview WWTF	Hardin	001-1	02/29/2016	Oxygen, dissolved [DO]	00300-1-0	Effluent Gross	31						4.81	mg/L					mg/L	Y
KY0045390	Airview WWTF	Hardin	001-1	01/31/2016	Oxygen, dissolved [DO]	00300-1-0	Effluent Gross							7.11	mg/L					mg/L	N
KY0045390	Airview WWTF	Hardin	001-1	12/31/2015	Oxygen, dissolved [DO]	00300-1-0	Effluent Gross	13						6.08	mg/L					mg/L	Y
KY0045390	Airview WWTF	Hardin	001-1	11/30/2015	Oxygen, dissolved [DO]	00300-1-0	Effluent Gross	9						6.34	mg/L					mg/L	Y
KY0045390	Airview WWTF	Hardin	001-1	10/31/2015	Oxygen, dissolved [DO]	00300-1-0	Effluent Gross	44						3.91	mg/L					mg/L	Y
KY0045390	Airview WWTF	Hardin	001-1	09/30/2015	Oxygen, dissolved [DO]	00300-1-0	Effluent Gross	43						3.98	mg/L					mg/L	Y
KY0045390	Airview WWTF	Hardin	001-1	08/31/2015	Oxygen, dissolved [DO]	00300-1-0	Effluent Gross	15						5.92	mg/L					mg/L	Y
KY0045390	Airview WWTF	Hardin	001-1	07/31/2015	Oxygen, dissolved [DO]	00300-1-0	Effluent Gross							NODI **8**						mg/L	N
KY0045390	Airview WWTF	Hardin	001-1	06/30/2015	Oxygen, dissolved [DO]	00300-1-0	Effluent Gross	11						6.21	mg/L					mg/L	Y
KY0045390	Airview WWTF	Hardin	001-1	05/31/2015	Oxygen, dissolved [DO]	00300-1-0	Effluent Gross	69						2.15	mg/L					mg/L	Y
KY0045390	Airview WWTF	Hardin	001-1	04/30/2015	Oxygen, dissolved [DO]	00300-1-0	Effluent Gross	9						6.37	mg/L					mg/L	Y
KY0045390	Airview WWTF	Hardin	001-1	03/31/2015	Oxygen, dissolved [DO]	00300-1-0	Effluent Gross							7.11	mg/L					mg/L	N
KY0045390	Airview WWTF	Hardin	001-1	02/28/2015	Oxygen, dissolved [DO]	00300-1-0	Effluent Gross							7.26	mg/L					mg/L	N
KY0045390	Airview WWTF	Hardin	001-1	01/31/2015	Oxygen, dissolved [DO]	00300-1-0	Effluent Gross	29						4.96	mg/L					mg/L	Y
KY0045390	Airview WWTF	Hardin	001-1	12/31/2014	Oxygen, dissolved [DO]	00300-1-0	Effluent Gross	65						2.45	mg/L					mg/L	Y
KY0045390	Airview WWTF	Hardin	001-1	11/30/2014	Oxygen, dissolved [DO]	00300-1-0	Effluent Gross							NODI **E**						mg/L	N
KY0045390	Airview WWTF	Hardin	001-1	10/31/2014	Oxygen, dissolved [DO]	00300-1-0	Effluent Gross							NODI **E**						mg/L	N
KY0045390	Airview WWTF	Hardin	001-1	09/30/2019	pH	00400-1-0	Effluent Gross							5.8	SU					SU	Y
KY0045390	Airview WWTF	Hardin	001-1	09/30/2019	pH	00400-1-0	Effluent Gross											5.8	SU	SU	N
KY0045390	Airview WWTF	Hardin	001-1	08/31/2019	pH	00400-1-0	Effluent Gross													SU	N
KY0045390	Airview WWTF	Hardin	001-1	07/31/2019	pH	00400-1-0	Effluent Gross													SU	N
KY0045390	Airview WWTF	Hardin	001-1	06/30/2019	pH	00400-1-0	Effluent Gross													SU	N
KY0045390	Airview WWTF	Hardin	001-1	05/31/2019	pH	00400-1-0	Effluent Gross													SU	N
KY0045390	Airview WWTF	Hardin	001-1	04/30/2019	pH	00400-1-0	Effluent Gross													SU	N
KY0045390	Airview WWTF	Hardin	001-1	03/31/2019	pH	00400-1-0	Effluent Gross							6.69	SU					SU	N
KY0045390	Airview WWTF	Hardin	001-1	03/31/2019	pH	00400-1-0	Effluent Gross											7.21	SU	SU	N
KY0045390	Airview WWTF	Hardin	001-1	02/28/2019	pH	00400-1-0	Effluent Gross							6.89	SU					SU	N
KY0045390	Airview WWTF	Hardin	001-1	02/28/2019	pH	00400-1-0	Effluent Gross											7.73	SU	SU	N
KY0045390	Airview WWTF	Hardin	001-1	01/31/2019	pH	00400-1-0	Effluent Gross							6.42	SU					SU	N
KY0045390	Airview WWTF	Hardin	001-1	01/31/2019	pH	00400-1-0	Effluent Gross											7.46	SU	SU	N
KY0045390	Airview WWTF	Hardin	001-1	12/31/2018	pH	00400-1-0	Effluent Gross													SU	N
KY0045390	Airview WWTF	Hardin	001-1	11/30/2018	pH	00400-1-0	Effluent Gross							6.89	SU					SU	N
KY0045390	Airview WWTF	Hardin	001-1	11/30/2018	pH	00400-1-0	Effluent Gross											7.26	SU	SU	N
KY0045390	Airview WWTF	Hardin	001-1	10/31/2018	pH	00400-1-0	Effluent Gross							6.94	SU					SU	N
KY0045390	Airview WWTF	Hardin	001-1	10/31/2018	pH	00400-1-0	Effluent Gross											7.17	SU	SU	N
KY0045390	Airview WWTF	Hardin	001-1	09/30/2018	pH	00400-1-0	Effluent Gross							6.52	SU					SU	N
KY0045390	Airview WWTF	Hardin	001-1	09/30/2018	pH	00400-1-0	Effluent Gross											7.73	SU	SU	N
KY0045390	Airview WWTF	Hardin	001-1	08/31/2018	pH	00400-1-0	Effluent Gross							6.82	SU					SU	N
KY0045390	Airview WWTF	Hardin	001-1	08/31/2018	pH	00400-1-0	Effluent Gross											7.25	SU	SU	N
KY0045390	Airview WWTF	Hardin	001-1	07/31/2018	pH	00400-1-0	Effluent Gross							6.49	SU					SU	N
KY0045390	Airview WWTF	Hardin	001-1	07/31/2018	pH	00400-1-0	Effluent Gross											7.23	SU	SU	N
KY0045390	Airview WWTF	Hardin	001-1	06/30/2018	pH	00400-1-0	Effluent Gross							6.23	SU					SU	N
KY0045390	Airview WWTF	Hardin	001-1	06/30/2018	pH	00400-1-0	Effluent Gross											7.11	SU	SU	N
KY0045390	Airview WWTF	Hardin	001-1	05/31/2018	pH	00400-1-0	Effluent Gross							6.66	SU					SU	N
KY0045390	Airview WWTF	Hardin	001-1	05/31/2018	pH	00400-1-0	Effluent Gross											7.24	SU	SU	N
KY0045390	Airview WWTF	Hardin	001-1	04/30/2018	pH	00400-1-0	Effluent Gross							7.06	SU					SU	N
KY0045390	Airview WWTF	Hardin	001-1	04/30/2018	pH	00400-1-0	Effluent Gross											7.7	SU	SU	N
KY0045390	Airview WWTF	Hardin	001-1	03/31/2018	pH	00400-1-0	Effluent Gross							6.89	SU					SU	N
KY0045390	Airview WWTF	Hardin	001-1	03/31/2018	pH	00400-1-0	Effluent Gross											7.83	SU	SU	N
KY0045390	Airview WWTF	Hardin	001-1	02/28/2018	pH	00400-1-0	Effluent Gross							6.64	SU					SU	N
KY0045390	Airview WWTF	Hardin	001-1	02/28/2018	pH	00400-1-0	Effluent Gross											7.54	SU	SU	N
KY0045390	Airview WWTF	Hardin	001-1	01/31/2018	pH	00400-1-0	Effluent Gross							7.02	SU					SU	N
KY0045390	Airview WWTF	Hardin	001-1	01/31/2018	pH	00400-1-0	Effluent Gross											9.65	SU	SU	Y
KY0045390	Airview WWTF	Hardin	001-1	12/31/2017	pH	00400-1-0	Effluent Gross							6.77	SU					SU	N
KY0045390	Airview WWTF	Hardin	001-1	12/31/2017	pH	00400-1-0	Effluent Gross											7.9	SU	SU	N
KY0045390	Airview WWTF	Hardin	001-1	11/30/2017	pH	00400-1-0	Effluent Gross							7.02	SU					SU	N
KY0045390	Airview WWTF	Hardin	001-1	11/30/2017	pH	00400-1-0	Effluent Gross											8.61	SU	SU	N
KY0045390	Airview WWTF	Hardin	001-1	10/31/2017	pH	00400-1-0	Effluent Gross							6.93	SU					SU	N
KY0045390	Airview WWTF	Hardin	001-1	10/31/2017	pH	00400-1-0	Effluent Gross											7.55	SU	SU	N
KY0045390	Airview WWTF	Hardin	001-1	09/30/2017	pH	00400-1-0	Effluent Gross							7.17	SU					SU	N
KY0045390	Airview WWTF	Hardin	001-1	09/30/2017	pH	00400-1-0	Effluent Gross											7.62	SU	SU	N
KY0045390	Airview WWTF	Hardin	001-1	08/31/2017	pH	00400-1-0	Effluent Gross							6.94	SU					SU	N
KY0045390	Airview WWTF	Hardin	001-1	08/31/2017	pH	00400-1-0	Effluent Gross											8.36	SU	SU	N
KY0045390	Airview WWTF	Hardin	001-1	07/31/2017	pH	00400-1-0	Effluent Gross							6.88	SU					SU	N
KY0045390	Airview WWTF	Hardin	001-1	07/31/2017	pH	00400-1-0	Effluent Gross											7.44	SU	SU	N
KY0045390	Airview WWTF	Hardin	001-1	06/30/2017	pH	00400-1-0	Effluent Gross							6.59	SU					SU	N
KY0045390	Airview WWTF	Hardin	001-1	06/30/2017	pH	00400-1-0	Effluent Gross											6.89	SU	SU	N
KY0045390	Airview WWTF	Hardin	001-1	05/31/2017	pH	00400-1-0	Effluent Gross							7.04	SU					SU	N

KY0045390	Airview WWTF	Hardin	001-1	05/31/2017	pH	00400-1-0	Effluent Gross											8.06	SU	SU	N
KY0045390	Airview WWTF	Hardin	001-1	04/30/2017	pH	00400-1-0	Effluent Gross							7.12	SU					SU	N
KY0045390	Airview WWTF	Hardin	001-1	04/30/2017	pH	00400-1-0	Effluent Gross											7.67	SU	SU	N
KY0045390	Airview WWTF	Hardin	001-1	03/31/2017	pH	00400-1-0	Effluent Gross							7.02	SU					SU	N
KY0045390	Airview WWTF	Hardin	001-1	03/31/2017	pH	00400-1-0	Effluent Gross											8.24	SU	SU	N
KY0045390	Airview WWTF	Hardin	001-1	02/28/2017	pH	00400-1-0	Effluent Gross							6.68	SU					SU	N
KY0045390	Airview WWTF	Hardin	001-1	02/28/2017	pH	00400-1-0	Effluent Gross											8.01	SU	SU	N
KY0045390	Airview WWTF	Hardin	001-1	01/31/2017	pH	00400-1-0	Effluent Gross							6.87	SU					SU	N
KY0045390	Airview WWTF	Hardin	001-1	01/31/2017	pH	00400-1-0	Effluent Gross											8.45	SU	SU	N
KY0045390	Airview WWTF	Hardin	001-1	12/31/2016	pH	00400-1-0	Effluent Gross							6.93	SU					SU	N
KY0045390	Airview WWTF	Hardin	001-1	12/31/2016	pH	00400-1-0	Effluent Gross											7.3	SU	SU	N
KY0045390	Airview WWTF	Hardin	001-1	11/30/2016	pH	00400-1-0	Effluent Gross							6.73	SU					SU	N
KY0045390	Airview WWTF	Hardin	001-1	11/30/2016	pH	00400-1-0	Effluent Gross											7.6	SU	SU	N
KY0045390	Airview WWTF	Hardin	001-1	10/31/2016	pH	00400-1-0	Effluent Gross							6.45	SU					SU	N
KY0045390	Airview WWTF	Hardin	001-1	10/31/2016	pH	00400-1-0	Effluent Gross											7.33	SU	SU	N
KY0045390	Airview WWTF	Hardin	001-1	09/30/2016	pH	00400-1-0	Effluent Gross							6.91	SU					SU	N
KY0045390	Airview WWTF	Hardin	001-1	09/30/2016	pH	00400-1-0	Effluent Gross											7.14	SU	SU	N
KY0045390	Airview WWTF	Hardin	001-1	08/31/2016	pH	00400-1-0	Effluent Gross							6.87	SU					SU	N
KY0045390	Airview WWTF	Hardin	001-1	08/31/2016	pH	00400-1-0	Effluent Gross											7.78	SU	SU	N
KY0045390	Airview WWTF	Hardin	001-1	07/31/2016	pH	00400-1-0	Effluent Gross							6.74	SU					SU	N
KY0045390	Airview WWTF	Hardin	001-1	07/31/2016	pH	00400-1-0	Effluent Gross											7.59	SU	SU	N
KY0045390	Airview WWTF	Hardin	001-1	06/30/2016	pH	00400-1-0	Effluent Gross							6.84	SU					SU	N
KY0045390	Airview WWTF	Hardin	001-1	06/30/2016	pH	00400-1-0	Effluent Gross											7.09	SU	SU	N
KY0045390	Airview WWTF	Hardin	001-1	05/31/2016	pH	00400-1-0	Effluent Gross							6.71	SU					SU	N
KY0045390	Airview WWTF	Hardin	001-1	05/31/2016	pH	00400-1-0	Effluent Gross											7.12	SU	SU	N
KY0045390	Airview WWTF	Hardin	001-1	04/30/2016	pH	00400-1-0	Effluent Gross							6.72	SU					SU	N
KY0045390	Airview WWTF	Hardin	001-1	04/30/2016	pH	00400-1-0	Effluent Gross											7.69	SU	SU	N
KY0045390	Airview WWTF	Hardin	001-1	03/31/2016	pH	00400-1-0	Effluent Gross							7.07	SU					SU	N
KY0045390	Airview WWTF	Hardin	001-1	03/31/2016	pH	00400-1-0	Effluent Gross											7.48	SU	SU	N
KY0045390	Airview WWTF	Hardin	001-1	02/29/2016	pH	00400-1-0	Effluent Gross							6.77	SU					SU	N
KY0045390	Airview WWTF	Hardin	001-1	02/29/2016	pH	00400-1-0	Effluent Gross											7.21	SU	SU	N
KY0045390	Airview WWTF	Hardin	001-1	01/31/2016	pH	00400-1-0	Effluent Gross							6.89	SU					SU	N
KY0045390	Airview WWTF	Hardin	001-1	01/31/2016	pH	00400-1-0	Effluent Gross											7.67	SU	SU	N
KY0045390	Airview WWTF	Hardin	001-1	12/31/2015	pH	00400-1-0	Effluent Gross							6.76	SU					SU	N
KY0045390	Airview WWTF	Hardin	001-1	12/31/2015	pH	00400-1-0	Effluent Gross											7.21	SU	SU	N
KY0045390	Airview WWTF	Hardin	001-1	11/30/2015	pH	00400-1-0	Effluent Gross							6.89	SU					SU	N
KY0045390	Airview WWTF	Hardin	001-1	11/30/2015	pH	00400-1-0	Effluent Gross											7.23	SU	SU	N
KY0045390	Airview WWTF	Hardin	001-1	10/31/2015	pH	00400-1-0	Effluent Gross							6.36	SU					SU	N
KY0045390	Airview WWTF	Hardin	001-1	10/31/2015	pH	00400-1-0	Effluent Gross											6.83	SU	SU	N
KY0045390	Airview WWTF	Hardin	001-1	09/30/2015	pH	00400-1-0	Effluent Gross							6.69	SU					SU	N
KY0045390	Airview WWTF	Hardin	001-1	09/30/2015	pH	00400-1-0	Effluent Gross											7.36	SU	SU	N
KY0045390	Airview WWTF	Hardin	001-1	08/31/2015	pH	00400-1-0	Effluent Gross							6.87	SU					SU	N
KY0045390	Airview WWTF	Hardin	001-1	08/31/2015	pH	00400-1-0	Effluent Gross											7.2	SU	SU	N
KY0045390	Airview WWTF	Hardin	001-1	07/31/2015	pH	00400-1-0	Effluent Gross							NODI **8**				NODI **8**		SU	N
KY0045390	Airview WWTF	Hardin	001-1	06/30/2015	pH	00400-1-0	Effluent Gross							6.85	SU					SU	N
KY0045390	Airview WWTF	Hardin	001-1	06/30/2015	pH	00400-1-0	Effluent Gross											7.51	SU	SU	N
KY0045390	Airview WWTF	Hardin	001-1	05/31/2015	pH	00400-1-0	Effluent Gross							6.91	SU					SU	N
KY0045390	Airview WWTF	Hardin	001-1	05/31/2015	pH	00400-1-0	Effluent Gross											7.8	SU	SU	N
KY0045390	Airview WWTF	Hardin	001-1	04/30/2015	pH	00400-1-0	Effluent Gross							6.52	SU					SU	N
KY0045390	Airview WWTF	Hardin	001-1	04/30/2015	pH	00400-1-0	Effluent Gross											7.48	SU	SU	N
KY0045390	Airview WWTF	Hardin	001-1	03/31/2015	pH	00400-1-0	Effluent Gross							6.89	SU					SU	N
KY0045390	Airview WWTF	Hardin	001-1	03/31/2015	pH	00400-1-0	Effluent Gross											7.16	SU	SU	N
KY0045390	Airview WWTF	Hardin	001-1	02/28/2015	pH	00400-1-0	Effluent Gross							6.92	SU					SU	N
KY0045390	Airview WWTF	Hardin	001-1	02/28/2015	pH	00400-1-0	Effluent Gross											7.62	SU	SU	N
KY0045390	Airview WWTF	Hardin	001-1	01/31/2015	pH	00400-1-0	Effluent Gross							6.92	SU					SU	N
KY0045390	Airview WWTF	Hardin	001-1	01/31/2015	pH	00400-1-0	Effluent Gross											7.47	SU	SU	N
KY0045390	Airview WWTF	Hardin	001-1	12/31/2014	pH	00400-1-0	Effluent Gross							6.88	SU					SU	N
KY0045390	Airview WWTF	Hardin	001-1	12/31/2014	pH	00400-1-0	Effluent Gross											7.06	SU	SU	N
KY0045390	Airview WWTF	Hardin	001-1	10/31/2014	pH	00400-1-0	Effluent Gross							NODI **E**				NODI **E**		SU	N
KY0045390	Airview WWTF	Hardin	001-1	09/30/2019	Solids, total suspended	00530-1-0	Effluent Gross		8.21	lb/d			lb/d								N
KY0045390	Airview WWTF	Hardin	001-1	09/30/2019	Solids, total suspended	00530-1-0	Effluent Gross				8.21	lb/d	lb/d								N
KY0045390	Airview WWTF	Hardin	001-1	09/30/2019	Solids, total suspended	00530-1-0	Effluent Gross									20	mg/L			mg/L	N
KY0045390	Airview WWTF	Hardin	001-1	09/30/2019	Solids, total suspended	00530-1-0	Effluent Gross											20	mg/L	mg/L	N
KY0045390	Airview WWTF	Hardin	001-1	08/31/2019	Solids, total suspended	00530-1-0	Effluent Gross						lb/d								N
KY0045390	Airview WWTF	Hardin	001-1	08/31/2019	Solids, total suspended	00530-1-0	Effluent Gross													mg/L	N
KY0045390	Airview WWTF	Hardin	001-1	07/31/2019	Solids, total suspended	00530-1-0	Effluent Gross						lb/d								N
KY0045390	Airview WWTF	Hardin	001-1	07/31/2019	Solids, total suspended	00530-1-0	Effluent Gross													mg/L	N
KY0045390	Airview WWTF	Hardin	001-1	06/30/2019	Solids, total suspended	00530-1-0	Effluent Gross						lb/d								N
KY0045390	Airview WWTF	Hardin	001-1	06/30/2019	Solids, total suspended	00530-1-0	Effluent Gross													mg/L	N
KY0045390	Airview WWTF	Hardin	001-1	05/31/2019	Solids, total suspended	00530-1-0	Effluent Gross						lb/d								N
KY0045390	Airview WWTF	Hardin	001-1	05/31/2019	Solids, total suspended	00530-1-0	Effluent Gross													mg/L	N
KY0045390	Airview WWTF	Hardin	001-1	04/30/2019	Solids, total suspended	00530-1-0	Effluent Gross						lb/d								N
KY0045390	Airview WWTF	Hardin	001-1	04/30/2019	Solids, total suspended	00530-1-0	Effluent Gross													mg/L	N
KY0045390	Airview WWTF	Hardin	001-1	03/31/2019	Solids, total suspended	00530-1-0	Effluent Gross		5	lb/d			lb/d								N
KY0045390	Airview WWTF	Hardin	001-1	03/31/2019	Solids, total suspended	00530-1-0	Effluent Gross				9	lb/d	lb/d								N
KY0045390	Airview WWTF	Hardin	001-1	03/31/2019	Solids, total suspended	00530-1-0	Effluent Gross	27								38	mg/L			mg/L	Y
KY0045390	Airview WWTF	Hardin	001-1	03/31/2019	Solids, total suspended	00530-1-0	Effluent Gross	36										61	mg/L	mg/L	Y
KY0045390	Airview WWTF	Hardin	001-1	02/28/2019	Solids, total suspended	00530-1-0	Effluent Gross		6	lb/d			lb/d								N
KY0045390	Airview WWTF	Hardin	001-1	02/28/2019	Solids, total suspended	00530-1-0	Effluent Gross				12	lb/d	lb/d								N
KY0045390	Airview WWTF	Hardin	001-1	02/28/2019	Solids, total suspended	00530-1-0	Effluent Gross									22	mg/L			mg/L	N
KY0045390	Airview WWTF	Hardin	001-1	02/28/2019	Solids, total suspended	00530-1-0	Effluent Gross											42	mg/L	mg/L	N
KY0045390	Airview WWTF	Hardin	001-1	01/31/2019	Solids, total suspended	00530-1-0	Effluent Gross		8	lb/d			lb/d								N
KY0045390	Airview WWTF	Hardin	001-1	01/31/2019	Solids, total suspended	00530-1-0	Effluent Gross				14	lb/d	lb/d								N
KY0045390	Airview WWTF	Hardin	001-1	01/31/2019	Solids, total suspended	00530-1-0	Effluent Gross									17	mg/L			mg/L	N
KY0045390	Airview WWTF	Hardin	001-1	01/31/2019	Solids, total suspended	00530-1-0	Effluent Gross											30	mg/L	mg/L	N
KY0045390	Airview WWTF	Hardin	001-1	12/31/2018	Solids, total suspended	00530-1-0	Effluent Gross						lb/d								N
KY0045390	Airview WWTF	Hardin	001-1	12/31/2018	Solids, total suspended	00530-1-0	Effluent Gross													mg/L	N
KY0045390	Airview WWTF	Hardin	001-1	11/30/2018	Solids, total suspended	00530-1-0	Effluent Gross		5	lb/d			lb/d								N
KY0045390	Airview WWTF	Hardin	001-1	11/30/2018	Solids, total suspended	00530-1-0	Effluent Gross				9	lb/d	lb/d								N
KY0045390	Airview WWTF	Hardin	001-1	11/30/2018	Solids, total suspended	00530-1-0	Effluent Gross									24	mg/L			mg/L	N
KY0045390	Airview WWTF	Hardin	001-1	11/30/2018	Solids, total suspended	00530-1-0	Effluent Gross											44	mg/L	mg/L	N
KY0045390	Airview WWTF	Hardin	001-1	10/31/2018	Solids, total suspended	00530-1-0	Effluent Gross		< 3	lb/d			lb/d								N
KY0045390	Airview WWTF	Hardin	001-1	10/31/2018	Solids, total suspended	00530-1-0	Effluent Gross				5	lb/d	lb/d								N
KY0045390	Airview WWTF	Hardin	001-1	10/31/2018	Solids, total suspended	00530-1-0	Effluent Gross									< 11	mg/L			mg/L	N
KY0045390	Airview WWTF	Hardin	001-1	10/31/2018	Solids, total suspended	00530-1-0	Effluent Gross											23	mg/L	mg/L	N
KY0045390	Airview WWTF	Hardin	001-1	09/30/2018	Solids, total suspended	00530-1-0	Effluent Gross		5	lb/d			lb/d								N
KY0045390	Airview WWTF	Hardin	001-1	09/30/2018	Solids, total suspended	00530-1-0	Effluent Gross				8	lb/d	lb/d								N
KY0045390	Airview WWTF	Hardin	001-1	09/30/2018	Solids, total suspended	00530-1-0	Effluent Gross									21	mg/L			mg/L	N
KY0045390	Airview WWTF	Hardin	001-1	09/30/2018	Solids, total suspended	00530-1-0	Effluent Gross											38	mg/L	mg/L	N
KY0045390	Airview WWTF	Hardin	001-1	08/31/2018	Solids, total suspended	00530-1-0	Effluent Gross		12	lb/d			lb/d								N
KY0045390	Airview WWTF	Hardin	001-1	08/31/2018	Solids, total suspended	00530-1-0	Effluent Gross	35			27	lb/d	lb/d								Y
KY0045390	Airview WWTF	Hardin	001-1	08/31/2018	Solids, total suspended	00530-1-0	Effluent Gross	90								57	mg/L			mg/L	Y
KY0045390	Airview WWTF	Hardin	001-1	08/31/2018	Solids, total suspended	00530-1-0	Effluent Gross	182										127	mg/L	mg/L	Y
KY0045390	Airview WWTF	Hardin	001-1	07/31/2018	Solids, total suspended	00530-1-0	Effluent Gross		4	lb/d			lb/d								N
KY0045390	Airview WWTF	Hardin	001-1	07/31/2018	Solids, total suspended	00530-1-0	Effluent Gross				8	lb/d	lb/d								N
KY0045390	Airview WWTF	Hardin	001-1	07/31/2018	Solids, total suspended	00530-1-0	Effluent Gross									19	mg/L			mg/L	N
KY0045390	Airview WWTF	Hardin	001-1	07/31/2018	Solids, total suspended	00530-1-0	Effluent Gross											40	mg/L	mg/L	N
KY0045390	Airview WWTF	Hardin	001-1	06/30/2018	Solids, total suspended	00530-1-0	Effluent Gross	248	48	lb/d			lb/d								Y
KY0045390	Airview WWTF	Hardin	001-1	06/30/2018	Solids, total suspended	00530-1-0	Effluent Gross	797			180	lb/d	lb/d								Y
KY0045390	Airview WWTF	Hardin	001-1	06/30/2018	Solids, total suspended	00530-1-0	Effluent Gross	23								37	mg/L			mg/L	Y
KY0045390	Airview WWTF	Hardin	001-1	06/30/2018	Solids, total suspended	00530-1-0	Effluent Gross	87										84	mg/L	mg/L	Y
KY0045390	Airview WWTF	Hardin	001-1	05/31/2018	Solids, total suspended	00530-1-0	Effluent Gross		13	lb/d			lb/d								N
KY0045390	Airview WWTF	Hardin	001-1	05/31/2018	Solids, total suspended	00530-1-0	Effluent Gross	124			45	lb/d	lb/d								Y

KY0045390	Airview WWTF	Hardin	001-1	05/31/2018	Solids, total suspended	00530-1-0	Effluent Gross	103								61	mg/L			mg/L	Y
KY0045390	Airview WWTF	Hardin	001-1	05/31/2018	Solids, total suspended	00530-1-0	Effluent Gross	382										217	mg/L	mg/L	Y
KY0045390	Airview WWTF	Hardin	001-1	04/30/2018	Solids, total suspended	00530-1-0	Effluent Gross		6	lb/d			lb/d								N
KY0045390	Airview WWTF	Hardin	001-1	04/30/2018	Solids, total suspended	00530-1-0	Effluent Gross				10	lb/d	lb/d								N
KY0045390	Airview WWTF	Hardin	001-1	04/30/2018	Solids, total suspended	00530-1-0	Effluent Gross									28	mg/L			mg/L	N
KY0045390	Airview WWTF	Hardin	001-1	04/30/2018	Solids, total suspended	00530-1-0	Effluent Gross	7										48	mg/L	mg/L	Y
KY0045390	Airview WWTF	Hardin	001-1	03/31/2018	Solids, total suspended	00530-1-0	Effluent Gross		4	lb/d			lb/d								N
KY0045390	Airview WWTF	Hardin	001-1	03/31/2018	Solids, total suspended	00530-1-0	Effluent Gross				6	lb/d	lb/d								N
KY0045390	Airview WWTF	Hardin	001-1	03/31/2018	Solids, total suspended	00530-1-0	Effluent Gross									19	mg/L			mg/L	N
KY0045390	Airview WWTF	Hardin	001-1	03/31/2018	Solids, total suspended	00530-1-0	Effluent Gross											28	mg/L	mg/L	N
KY0045390	Airview WWTF	Hardin	001-1	02/28/2018	Solids, total suspended	00530-1-0	Effluent Gross	190	40	lb/d			lb/d								Y
KY0045390	Airview WWTF	Hardin	001-1	02/28/2018	Solids, total suspended	00530-1-0	Effluent Gross	598			140	lb/d	lb/d								Y
KY0045390	Airview WWTF	Hardin	001-1	02/28/2018	Solids, total suspended	00530-1-0	Effluent Gross	547								194	mg/L			mg/L	Y
KY0045390	Airview WWTF	Hardin	001-1	02/28/2018	Solids, total suspended	00530-1-0	Effluent Gross	1431										689	mg/L	mg/L	Y
KY0045390	Airview WWTF	Hardin	001-1	01/31/2018	Solids, total suspended	00530-1-0	Effluent Gross		< 4	lb/d			lb/d								N
KY0045390	Airview WWTF	Hardin	001-1	01/31/2018	Solids, total suspended	00530-1-0	Effluent Gross				< 11	lb/d	lb/d								N
KY0045390	Airview WWTF	Hardin	001-1	01/31/2018	Solids, total suspended	00530-1-0	Effluent Gross									< 8	mg/L			mg/L	N
KY0045390	Airview WWTF	Hardin	001-1	01/31/2018	Solids, total suspended	00530-1-0	Effluent Gross											9	mg/L	mg/L	N
KY0045390	Airview WWTF	Hardin	001-1	12/31/2017	Solids, total suspended	00530-1-0	Effluent Gross		< 2	lb/d			lb/d								N
KY0045390	Airview WWTF	Hardin	001-1	12/31/2017	Solids, total suspended	00530-1-0	Effluent Gross				1	lb/d	lb/d								N
KY0045390	Airview WWTF	Hardin	001-1	12/31/2017	Solids, total suspended	00530-1-0	Effluent Gross									< 6	mg/L			mg/L	N
KY0045390	Airview WWTF	Hardin	001-1	12/31/2017	Solids, total suspended	00530-1-0	Effluent Gross											6	mg/L	mg/L	N
KY0045390	Airview WWTF	Hardin	001-1	11/30/2017	Solids, total suspended	00530-1-0	Effluent Gross		< 5	lb/d			lb/d								N
KY0045390	Airview WWTF	Hardin	001-1	11/30/2017	Solids, total suspended	00530-1-0	Effluent Gross				14	lb/d	lb/d								N
KY0045390	Airview WWTF	Hardin	001-1	11/30/2017	Solids, total suspended	00530-1-0	Effluent Gross									< 20	mg/L			mg/L	N
KY0045390	Airview WWTF	Hardin	001-1	11/30/2017	Solids, total suspended	00530-1-0	Effluent Gross	49										67	mg/L	mg/L	Y
KY0045390	Airview WWTF	Hardin	001-1	10/31/2017	Solids, total suspended	00530-1-0	Effluent Gross		13	lb/d			lb/d								N
KY0045390	Airview WWTF	Hardin	001-1	10/31/2017	Solids, total suspended	00530-1-0	Effluent Gross	94			39	lb/d	lb/d								Y
KY0045390	Airview WWTF	Hardin	001-1	10/31/2017	Solids, total suspended	00530-1-0	Effluent Gross	123								67	mg/L			mg/L	Y
KY0045390	Airview WWTF	Hardin	001-1	10/31/2017	Solids, total suspended	00530-1-0	Effluent Gross	369										211	mg/L	mg/L	Y
KY0045390	Airview WWTF	Hardin	001-1	09/30/2017	Solids, total suspended	00530-1-0	Effluent Gross	9	< 15	lb/d			lb/d								Y
KY0045390	Airview WWTF	Hardin	001-1	09/30/2017	Solids, total suspended	00530-1-0	Effluent Gross	69			34	lb/d	lb/d								Y
KY0045390	Airview WWTF	Hardin	001-1	09/30/2017	Solids, total suspended	00530-1-0	Effluent Gross	120								< 66	mg/L			mg/L	Y
KY0045390	Airview WWTF	Hardin	001-1	09/30/2017	Solids, total suspended	00530-1-0	Effluent Gross	247										156	mg/L	mg/L	Y
KY0045390	Airview WWTF	Hardin	001-1	08/31/2017	Solids, total suspended	00530-1-0	Effluent Gross		5	lb/d			lb/d								N
KY0045390	Airview WWTF	Hardin	001-1	08/31/2017	Solids, total suspended	00530-1-0	Effluent Gross				15	lb/d	lb/d								N
KY0045390	Airview WWTF	Hardin	001-1	08/31/2017	Solids, total suspended	00530-1-0	Effluent Gross									24	mg/L			mg/L	N
KY0045390	Airview WWTF	Hardin	001-1	08/31/2017	Solids, total suspended	00530-1-0	Effluent Gross	60										72	mg/L	mg/L	Y
KY0045390	Airview WWTF	Hardin	001-1	07/31/2017	Solids, total suspended	00530-1-0	Effluent Gross		3	lb/d			lb/d								N
KY0045390	Airview WWTF	Hardin	001-1	07/31/2017	Solids, total suspended	00530-1-0	Effluent Gross				3	lb/d	lb/d								N
KY0045390	Airview WWTF	Hardin	001-1	07/31/2017	Solids, total suspended	00530-1-0	Effluent Gross									12	mg/L			mg/L	N
KY0045390	Airview WWTF	Hardin	001-1	07/31/2017	Solids, total suspended	00530-1-0	Effluent Gross											15	mg/L	mg/L	N
KY0045390	Airview WWTF	Hardin	001-1	06/30/2017	Solids, total suspended	00530-1-0	Effluent Gross		< 4	lb/d			lb/d								N
KY0045390	Airview WWTF	Hardin	001-1	06/30/2017	Solids, total suspended	00530-1-0	Effluent Gross				6	lb/d	lb/d								N
KY0045390	Airview WWTF	Hardin	001-1	06/30/2017	Solids, total suspended	00530-1-0	Effluent Gross									< 15	mg/L			mg/L	N
KY0045390	Airview WWTF	Hardin	001-1	06/30/2017	Solids, total suspended	00530-1-0	Effluent Gross											27	mg/L	mg/L	N
KY0045390	Airview WWTF	Hardin	001-1	05/31/2017	Solids, total suspended	00530-1-0	Effluent Gross		< 3	lb/d			lb/d								N
KY0045390	Airview WWTF	Hardin	001-1	05/31/2017	Solids, total suspended	00530-1-0	Effluent Gross				4	lb/d	lb/d								N
KY0045390	Airview WWTF	Hardin	001-1	05/31/2017	Solids, total suspended	00530-1-0	Effluent Gross									< 11	mg/L			mg/L	N
KY0045390	Airview WWTF	Hardin	001-1	05/31/2017	Solids, total suspended	00530-1-0	Effluent Gross											16	mg/L	mg/L	N
KY0045390	Airview WWTF	Hardin	001-1	04/30/2017	Solids, total suspended	00530-1-0	Effluent Gross		< 4	lb/d			lb/d								N
KY0045390	Airview WWTF	Hardin	001-1	04/30/2017	Solids, total suspended	00530-1-0	Effluent Gross				10	lb/d	lb/d								N
KY0045390	Airview WWTF	Hardin	001-1	04/30/2017	Solids, total suspended	00530-1-0	Effluent Gross									< 13	mg/L			mg/L	N
KY0045390	Airview WWTF	Hardin	001-1	04/30/2017	Solids, total suspended	00530-1-0	Effluent Gross											23	mg/L	mg/L	N
KY0045390	Airview WWTF	Hardin	001-1	03/31/2017	Solids, total suspended	00530-1-0	Effluent Gross		< 2	lb/d			lb/d								N
KY0045390	Airview WWTF	Hardin	001-1	03/31/2017	Solids, total suspended	00530-1-0	Effluent Gross				< 3	lb/d	lb/d								N
KY0045390	Airview WWTF	Hardin	001-1	03/31/2017	Solids, total suspended	00530-1-0	Effluent Gross									< 6	mg/L			mg/L	N
KY0045390	Airview WWTF	Hardin	001-1	03/31/2017	Solids, total suspended	00530-1-0	Effluent Gross											< 5	mg/L	mg/L	N
KY0045390	Airview WWTF	Hardin	001-1	02/28/2017	Solids, total suspended	00530-1-0	Effluent Gross		2	lb/d			lb/d								N
KY0045390	Airview WWTF	Hardin	001-1	02/28/2017	Solids, total suspended	00530-1-0	Effluent Gross				3	lb/d	lb/d								N
KY0045390	Airview WWTF	Hardin	001-1	02/28/2017	Solids, total suspended	00530-1-0	Effluent Gross									14	mg/L			mg/L	N
KY0045390	Airview WWTF	Hardin	001-1	02/28/2017	Solids, total suspended	00530-1-0	Effluent Gross											21	mg/L	mg/L	N
KY0045390	Airview WWTF	Hardin	001-1	01/31/2017	Solids, total suspended	00530-1-0	Effluent Gross		2	lb/d			lb/d								N
KY0045390	Airview WWTF	Hardin	001-1	01/31/2017	Solids, total suspended	00530-1-0	Effluent Gross				3	lb/d	lb/d								N
KY0045390	Airview WWTF	Hardin	001-1	01/31/2017	Solids, total suspended	00530-1-0	Effluent Gross	47								44	mg/L			mg/L	Y
KY0045390	Airview WWTF	Hardin	001-1	01/31/2017	Solids, total suspended	00530-1-0	Effluent Gross	158										116	mg/L	mg/L	Y
KY0045390	Airview WWTF	Hardin	001-1	12/31/2016	Solids, total suspended	00530-1-0	Effluent Gross		5	lb/d			lb/d								N
KY0045390	Airview WWTF	Hardin	001-1	12/31/2016	Solids, total suspended	00530-1-0	Effluent Gross				11	lb/d	lb/d								N
KY0045390	Airview WWTF	Hardin	001-1	12/31/2016	Solids, total suspended	00530-1-0	Effluent Gross									12	mg/L			mg/L	N
KY0045390	Airview WWTF	Hardin	001-1	12/31/2016	Solids, total suspended	00530-1-0	Effluent Gross											22	mg/L	mg/L	N
KY0045390	Airview WWTF	Hardin	001-1	11/30/2016	Solids, total suspended	00530-1-0	Effluent Gross		< 2	lb/d			lb/d								N
KY0045390	Airview WWTF	Hardin	001-1	11/30/2016	Solids, total suspended	00530-1-0	Effluent Gross				2	lb/d	lb/d								N
KY0045390	Airview WWTF	Hardin	001-1	11/30/2016	Solids, total suspended	00530-1-0	Effluent Gross									< 18	mg/L			mg/L	N
KY0045390	Airview WWTF	Hardin	001-1	11/30/2016	Solids, total suspended	00530-1-0	Effluent Gross	36										61	mg/L	mg/L	Y
KY0045390	Airview WWTF	Hardin	001-1	10/31/2016	Solids, total suspended	00530-1-0	Effluent Gross		7	lb/d			lb/d								N
KY0045390	Airview WWTF	Hardin	001-1	10/31/2016	Solids, total suspended	00530-1-0	Effluent Gross				7	lb/d	lb/d								N
KY0045390	Airview WWTF	Hardin	001-1	10/31/2016	Solids, total suspended	00530-1-0	Effluent Gross	40								42	mg/L			mg/L	Y
KY0045390	Airview WWTF	Hardin	001-1	10/31/2016	Solids, total suspended	00530-1-0	Effluent Gross											42	mg/L	mg/L	N
KY0045390	Airview WWTF	Hardin	001-1	09/30/2016	Solids, total suspended	00530-1-0	Effluent Gross		< 10	lb/d			lb/d								N
KY0045390	Airview WWTF	Hardin	001-1	09/30/2016	Solids, total suspended	00530-1-0	Effluent Gross				14	lb/d	lb/d								N
KY0045390	Airview WWTF	Hardin	001-1	09/30/2016	Solids, total suspended	00530-1-0	Effluent Gross	27								< 38	mg/L			mg/L	Y
KY0045390	Airview WWTF	Hardin	001-1	09/30/2016	Solids, total suspended	00530-1-0	Effluent Gross	62										73	mg/L	mg/L	Y
KY0045390	Airview WWTF	Hardin	001-1	08/31/2016	Solids, total suspended	00530-1-0	Effluent Gross		5	lb/d			lb/d								N
KY0045390	Airview WWTF	Hardin	001-1	08/31/2016	Solids, total suspended	00530-1-0	Effluent Gross				8	lb/d	lb/d								N
KY0045390	Airview WWTF	Hardin	001-1	08/31/2016	Solids, total suspended	00530-1-0	Effluent Gross									26	mg/L			mg/L	N
KY0045390	Airview WWTF	Hardin	001-1	08/31/2016	Solids, total suspended	00530-1-0	Effluent Gross											39	mg/L	mg/L	N
KY0045390	Airview WWTF	Hardin	001-1	07/31/2016	Solids, total suspended	00530-1-0	Effluent Gross	23	17	lb/d			lb/d								Y
KY0045390	Airview WWTF	Hardin	001-1	07/31/2016	Solids, total suspended	00530-1-0	Effluent Gross	124			45	lb/d	lb/d								Y
KY0045390	Airview WWTF	Hardin	001-1	07/31/2016	Solids, total suspended	00530-1-0	Effluent Gross	143								73	mg/L			mg/L	Y
KY0045390	Airview WWTF	Hardin	001-1	07/31/2016	Solids, total suspended	00530-1-0	Effluent Gross	324										191	mg/L	mg/L	Y
KY0045390	Airview WWTF	Hardin	001-1	06/30/2016	Solids, total suspended	00530-1-0	Effluent Gross	9	15	lb/d			lb/d								Y
KY0045390	Airview WWTF	Hardin	001-1	06/30/2016	Solids, total suspended	00530-1-0	Effluent Gross	74			35	lb/d	lb/d								Y
KY0045390	Airview WWTF	Hardin	001-1	06/30/2016	Solids, total suspended	00530-1-0	Effluent Gross	137								71	mg/L			mg/L	Y
KY0045390	Airview WWTF	Hardin	001-1	06/30/2016	Solids, total suspended	00530-1-0	Effluent Gross	287										174	mg/L	mg/L	Y
KY0045390	Airview WWTF	Hardin	001-1	05/31/2016	Solids, total suspended	00530-1-0	Effluent Gross		5	lb/d			lb/d								N
KY0045390	Airview WWTF	Hardin	001-1	05/31/2016	Solids, total suspended	00530-1-0	Effluent Gross				6	lb/d	lb/d								N
KY0045390	Airview WWTF	Hardin	001-1	05/31/2016	Solids, total suspended	00530-1-0	Effluent Gross									24	mg/L			mg/L	N
KY0045390	Airview WWTF	Hardin	001-1	05/31/2016	Solids, total suspended	00530-1-0	Effluent Gross											28	mg/L	mg/L	N
KY0045390	Airview WWTF	Hardin	001-1	04/30/2016	Solids, total suspended	00530-1-0	Effluent Gross		5	lb/d			lb/d								N
KY0045390	Airview WWTF	Hardin	001-1	04/30/2016	Solids, total suspended	00530-1-0	Effluent Gross				15	lb/d	lb/d								N
KY0045390	Airview WWTF	Hardin	001-1	04/30/2016	Solids, total suspended	00530-1-0	Effluent Gross									22	mg/L			mg/L	N
KY0045390	Airview WWTF	Hardin	001-1	04/30/2016	Solids, total suspended	00530-1-0	Effluent Gross	27										57	mg/L	mg/L	Y
KY0045390	Airview WWTF	Hardin	001-1	03/31/2016	Solids, total suspended	00530-1-0	Effluent Gross		5	lb/d			lb/d								N
KY0045390	Airview WWTF	Hardin	001-1	03/31/2016	Solids, total suspended	00530-1-0	Effluent Gross				11	lb/d	lb/d								N
KY0045390	Airview WWTF	Hardin	001-1	03/31/2016	Solids, total suspended	00530-1-0	Effluent Gross									21	mg/L			mg/L	N
KY0045390	Airview WWTF	Hardin	001-1	03/31/2016	Solids, total suspended	00530-1-0	Effluent Gross											45	mg/L	mg/L	N
KY0045390	Airview WWTF	Hardin	001-1	02/29/2016	Solids, total suspended	00530-1-0	Effluent Gross		< 3	lb/d			lb/d								N
KY0045390	Airview WWTF	Hardin	001-1	02/29/2016	Solids, total suspended	00530-1-0	Effluent Gross				4	lb/d	lb/d								N
KY0045390	Airview WWTF	Hardin	001-1	02/29/2016	Solids, total suspended	00530-1-0	Effluent Gross									< 12	mg/L			mg/L	N
KY0045390	Airview WWTF	Hardin	001-1	02/29/2016	Solids, total suspended	00530-1-0	Effluent Gross											19	mg/L	mg/L	N
KY0045390	Airview WWTF	Hardin	001-1	01/31/2016	Solids, total suspended	00530-1-0	Effluent Gross		< 2	lb/d			lb/d								N
KY0045390	Airview WWTF	Hardin	001-1	01/31/2016	Solids, total suspended	00530-1-0	Effluent Gross				3	lb/d	lb/d								N
KY0045390	Airview WWTF	Hardin	001-1	01/31/2016	Solids, total suspended	00530-1-0	Effluent Gross									< 9	mg/L			mg/L	N
KY0045390	Airview WWTF	Hardin	001-1	01/31/2016	Solids, total suspended	00530-1-0	Effluent Gross											15	mg/L	mg/L	N

KY0045390	Airview WWTF	Hardin	001-1	12/31/2015	Solids, total suspended	00530-1-0	Effluent Gross		5	lb/d			lb/d							N
KY0045390	Airview WWTF	Hardin	001-1	12/31/2015	Solids, total suspended	00530-1-0	Effluent Gross				11	lb/d	lb/d							N
KY0045390	Airview WWTF	Hardin	001-1	12/31/2015	Solids, total suspended	00530-1-0	Effluent Gross									26	mg/L			mg/L	N
KY0045390	Airview WWTF	Hardin	001-1	12/31/2015	Solids, total suspended	00530-1-0	Effluent Gross	40										63	mg/L	mg/L	Y
KY0045390	Airview WWTF	Hardin	001-1	11/30/2015	Solids, total suspended	00530-1-0	Effluent Gross		3	lb/d			lb/d							N
KY0045390	Airview WWTF	Hardin	001-1	11/30/2015	Solids, total suspended	00530-1-0	Effluent Gross				5	lb/d	lb/d							N
KY0045390	Airview WWTF	Hardin	001-1	11/30/2015	Solids, total suspended	00530-1-0	Effluent Gross									14	mg/L			mg/L	N
KY0045390	Airview WWTF	Hardin	001-1	11/30/2015	Solids, total suspended	00530-1-0	Effluent Gross											26	mg/L	mg/L	N
KY0045390	Airview WWTF	Hardin	001-1	10/31/2015	Solids, total suspended	00530-1-0	Effluent Gross	103	28	lb/d			lb/d							Y
KY0045390	Airview WWTF	Hardin	001-1	10/31/2015	Solids, total suspended	00530-1-0	Effluent Gross	304			81	lb/d	lb/d							Y
KY0045390	Airview WWTF	Hardin	001-1	10/31/2015	Solids, total suspended	00530-1-0	Effluent Gross	347								134	mg/L			mg/L	Y
KY0045390	Airview WWTF	Hardin	001-1	10/31/2015	Solids, total suspended	00530-1-0	Effluent Gross	836										421	mg/L	mg/L	Y
KY0045390	Airview WWTF	Hardin	001-1	09/30/2015	Solids, total suspended	00530-1-0	Effluent Gross	81	25	lb/d			lb/d							Y
KY0045390	Airview WWTF	Hardin	001-1	09/30/2015	Solids, total suspended	00530-1-0	Effluent Gross	239			68	lb/d	lb/d							Y
KY0045390	Airview WWTF	Hardin	001-1	09/30/2015	Solids, total suspended	00530-1-0	Effluent Gross	103								61	mg/L			mg/L	Y
KY0045390	Airview WWTF	Hardin	001-1	09/30/2015	Solids, total suspended	00530-1-0	Effluent Gross	76										79	mg/L	mg/L	Y
KY0045390	Airview WWTF	Hardin	001-1	08/31/2015	Solids, total suspended	00530-1-0	Effluent Gross		10	lb/d			lb/d							N
KY0045390	Airview WWTF	Hardin	001-1	08/31/2015	Solids, total suspended	00530-1-0	Effluent Gross	20			24	lb/d	lb/d							Y
KY0045390	Airview WWTF	Hardin	001-1	08/31/2015	Solids, total suspended	00530-1-0	Effluent Gross	67								50	mg/L			mg/L	Y
KY0045390	Airview WWTF	Hardin	001-1	08/31/2015	Solids, total suspended	00530-1-0	Effluent Gross	133										105	mg/L	mg/L	Y
KY0045390	Airview WWTF	Hardin	001-1	07/31/2015	Solids, total suspended	00530-1-0	Effluent Gross		NODI **8**		NODI **8**		lb/d								N
KY0045390	Airview WWTF	Hardin	001-1	07/31/2015	Solids, total suspended	00530-1-0	Effluent Gross									NODI **8**		NODI **8**		mg/L	N
KY0045390	Airview WWTF	Hardin	001-1	06/30/2015	Solids, total suspended	00530-1-0	Effluent Gross		9	lb/d			lb/d							N
KY0045390	Airview WWTF	Hardin	001-1	06/30/2015	Solids, total suspended	00530-1-0	Effluent Gross				20	lb/d	lb/d							N
KY0045390	Airview WWTF	Hardin	001-1	06/30/2015	Solids, total suspended	00530-1-0	Effluent Gross	57								47	mg/L			mg/L	Y
KY0045390	Airview WWTF	Hardin	001-1	06/30/2015	Solids, total suspended	00530-1-0	Effluent Gross	142										109	mg/L	mg/L	Y
KY0045390	Airview WWTF	Hardin	001-1	05/31/2015	Solids, total suspended	00530-1-0	Effluent Gross		8	lb/d			lb/d							N
KY0045390	Airview WWTF	Hardin	001-1	05/31/2015	Solids, total suspended	00530-1-0	Effluent Gross				12	lb/d	lb/d							N
KY0045390	Airview WWTF	Hardin	001-1	05/31/2015	Solids, total suspended	00530-1-0	Effluent Gross	47								44	mg/L			mg/L	Y
KY0045390	Airview WWTF	Hardin	001-1	05/31/2015	Solids, total suspended	00530-1-0	Effluent Gross	33										60	mg/L	mg/L	Y
KY0045390	Airview WWTF	Hardin	001-1	04/30/2015	Solids, total suspended	00530-1-0	Effluent Gross		6	lb/d			lb/d							N
KY0045390	Airview WWTF	Hardin	001-1	04/30/2015	Solids, total suspended	00530-1-0	Effluent Gross				6	lb/d	lb/d							N
KY0045390	Airview WWTF	Hardin	001-1	04/30/2015	Solids, total suspended	00530-1-0	Effluent Gross									30	mg/L			mg/L	N
KY0045390	Airview WWTF	Hardin	001-1	04/30/2015	Solids, total suspended	00530-1-0	Effluent Gross											30	mg/L	mg/L	N
KY0045390	Airview WWTF	Hardin	001-1	03/31/2015	Solids, total suspended	00530-1-0	Effluent Gross		5	lb/d			lb/d							N
KY0045390	Airview WWTF	Hardin	001-1	03/31/2015	Solids, total suspended	00530-1-0	Effluent Gross				11	lb/d	lb/d							N
KY0045390	Airview WWTF	Hardin	001-1	03/31/2015	Solids, total suspended	00530-1-0	Effluent Gross	20								36	mg/L			mg/L	Y
KY0045390	Airview WWTF	Hardin	001-1	03/31/2015	Solids, total suspended	00530-1-0	Effluent Gross	67										75	mg/L	mg/L	Y
KY0045390	Airview WWTF	Hardin	001-1	02/28/2015	Solids, total suspended	00530-1-0	Effluent Gross		9	lb/d			lb/d							N
KY0045390	Airview WWTF	Hardin	001-1	02/28/2015	Solids, total suspended	00530-1-0	Effluent Gross				12	lb/d	lb/d							N
KY0045390	Airview WWTF	Hardin	001-1	02/28/2015	Solids, total suspended	00530-1-0	Effluent Gross	40								42	mg/L			mg/L	Y
KY0045390	Airview WWTF	Hardin	001-1	02/28/2015	Solids, total suspended	00530-1-0	Effluent Gross	31										59	mg/L	mg/L	Y
KY0045390	Airview WWTF	Hardin	001-1	01/31/2015	Solids, total suspended	00530-1-0	Effluent Gross		11	lb/d			lb/d							N
KY0045390	Airview WWTF	Hardin	001-1	01/31/2015	Solids, total suspended	00530-1-0	Effluent Gross				20	lb/d	lb/d							N
KY0045390	Airview WWTF	Hardin	001-1	01/31/2015	Solids, total suspended	00530-1-0	Effluent Gross									30	mg/L			mg/L	N
KY0045390	Airview WWTF	Hardin	001-1	01/31/2015	Solids, total suspended	00530-1-0	Effluent Gross											43	mg/L	mg/L	N
KY0045390	Airview WWTF	Hardin	001-1	12/31/2014	Solids, total suspended	00530-1-0	Effluent Gross	1	14	lb/d			lb/d							Y
KY0045390	Airview WWTF	Hardin	001-1	12/31/2014	Solids, total suspended	00530-1-0	Effluent Gross				18	lb/d	lb/d							N
KY0045390	Airview WWTF	Hardin	001-1	12/31/2014	Solids, total suspended	00530-1-0	Effluent Gross	130								69	mg/L			mg/L	Y
KY0045390	Airview WWTF	Hardin	001-1	12/31/2014	Solids, total suspended	00530-1-0	Effluent Gross	87										84	mg/L	mg/L	Y
KY0045390	Airview WWTF	Hardin	001-1	11/30/2014	Solids, total suspended	00530-1-0	Effluent Gross		NODI **E**		NODI **E**		lb/d								N
KY0045390	Airview WWTF	Hardin	001-1	11/30/2014	Solids, total suspended	00530-1-0	Effluent Gross									NODI **E**		NODI **E**		mg/L	N
KY0045390	Airview WWTF	Hardin	001-1	10/31/2014	Solids, total suspended	00530-1-0	Effluent Gross		NODI **E**		NODI **E**		lb/d								N
KY0045390	Airview WWTF	Hardin	001-1	10/31/2014	Solids, total suspended	00530-1-0	Effluent Gross									NODI **E**		NODI **E**		mg/L	N

KY0045390	Airview WWTF	Hardin	001-1	09/30/2019	Nitrogen, ammonia total [as	00610-1-1	Effluent Gross		.369	lb/d			lb/d							N
KY0045390	Airview WWTF	Hardin	001-1	09/30/2019	Nitrogen, ammonia total [as	00610-1-1	Effluent Gross				.369	lb/d	lb/d							N
KY0045390	Airview WWTF	Hardin	001-1	09/30/2019	Nitrogen, ammonia total [as	00610-1-1	Effluent Gross									.9	mg/L			mg/L	N
KY0045390	Airview WWTF	Hardin	001-1	09/30/2019	Nitrogen, ammonia total [as	00610-1-1	Effluent Gross											.9	mg/L	mg/L	N
KY0045390	Airview WWTF	Hardin	001-1	08/31/2019	Nitrogen, ammonia total [as	00610-1-1	Effluent Gross						lb/d							N
KY0045390	Airview WWTF	Hardin	001-1	08/31/2019	Nitrogen, ammonia total [as	00610-1-1	Effluent Gross													mg/L	N
KY0045390	Airview WWTF	Hardin	001-1	07/31/2019	Nitrogen, ammonia total [as	00610-1-1	Effluent Gross						lb/d							N
KY0045390	Airview WWTF	Hardin	001-1	07/31/2019	Nitrogen, ammonia total [as	00610-1-1	Effluent Gross													mg/L	N
KY0045390	Airview WWTF	Hardin	001-1	06/30/2019	Nitrogen, ammonia total [as	00610-1-1	Effluent Gross						lb/d							N
KY0045390	Airview WWTF	Hardin	001-1	06/30/2019	Nitrogen, ammonia total [as	00610-1-1	Effluent Gross													mg/L	N
KY0045390	Airview WWTF	Hardin	001-1	05/31/2019	Nitrogen, ammonia total [as	00610-1-1	Effluent Gross						lb/d							N
KY0045390	Airview WWTF	Hardin	001-1	05/31/2019	Nitrogen, ammonia total [as	00610-1-1	Effluent Gross													mg/L	N
KY0045390	Airview WWTF	Hardin	001-1	10/31/2018	Nitrogen, ammonia total [as	00610-1-1	Effluent Gross		< .0519	lb/d			lb/d							N
KY0045390	Airview WWTF	Hardin	001-1	10/31/2018	Nitrogen, ammonia total [as	00610-1-1	Effluent Gross				.0632	lb/d	lb/d							N
KY0045390	Airview WWTF	Hardin	001-1	10/31/2018	Nitrogen, ammonia total [as	00610-1-1	Effluent Gross									< .27	mg/L			mg/L	N
KY0045390	Airview WWTF	Hardin	001-1	10/31/2018	Nitrogen, ammonia total [as	00610-1-1	Effluent Gross											.3	mg/L	mg/L	N
KY0045390	Airview WWTF	Hardin	001-1	09/30/2018	Nitrogen, ammonia total [as	00610-1-1	Effluent Gross		< .2469	lb/d			lb/d							N
KY0045390	Airview WWTF	Hardin	001-1	09/30/2018	Nitrogen, ammonia total [as	00610-1-1	Effluent Gross				.685	lb/d	lb/d							N
KY0045390	Airview WWTF	Hardin	001-1	09/30/2018	Nitrogen, ammonia total [as	00610-1-1	Effluent Gross									< 1.036	mg/L			mg/L	N
KY0045390	Airview WWTF	Hardin	001-1	09/30/2018	Nitrogen, ammonia total [as	00610-1-1	Effluent Gross											2.6	mg/L	mg/L	N
KY0045390	Airview WWTF	Hardin	001-1	08/31/2018	Nitrogen, ammonia total [as	00610-1-1	Effluent Gross		.843	lb/d			lb/d							N
KY0045390	Airview WWTF	Hardin	001-1	08/31/2018	Nitrogen, ammonia total [as	00610-1-1	Effluent Gross	12			3.1	lb/d	lb/d							Y
KY0045390	Airview WWTF	Hardin	001-1	08/31/2018	Nitrogen, ammonia total [as	00610-1-1	Effluent Gross	2								4.07	mg/L			mg/L	Y
KY0045390	Airview WWTF	Hardin	001-1	08/31/2018	Nitrogen, ammonia total [as	00610-1-1	Effluent Gross	150										15	mg/L	mg/L	Y
KY0045390	Airview WWTF	Hardin	001-1	07/31/2018	Nitrogen, ammonia total [as	00610-1-1	Effluent Gross		< 1.468	lb/d			lb/d							N
KY0045390	Airview WWTF	Hardin	001-1	07/31/2018	Nitrogen, ammonia total [as	00610-1-1	Effluent Gross	104			5.64	lb/d	lb/d							Y
KY0045390	Airview WWTF	Hardin	001-1	07/31/2018	Nitrogen, ammonia total [as	00610-1-1	Effluent Gross	76								< 7.06	mg/L			mg/L	Y
KY0045390	Airview WWTF	Hardin	001-1	07/31/2018	Nitrogen, ammonia total [as	00610-1-1	Effluent Gross	350										27	mg/L	mg/L	Y
KY0045390	Airview WWTF	Hardin	001-1	06/30/2018	Nitrogen, ammonia total [as	00610-1-1	Effluent Gross		< .899	lb/d			lb/d							N
KY0045390	Airview WWTF	Hardin	001-1	06/30/2018	Nitrogen, ammonia total [as	00610-1-1	Effluent Gross				2.06	lb/d	lb/d							N
KY0045390	Airview WWTF	Hardin	001-1	06/30/2018	Nitrogen, ammonia total [as	00610-1-1	Effluent Gross									< 2.09	mg/L			mg/L	N
KY0045390	Airview WWTF	Hardin	001-1	06/30/2018	Nitrogen, ammonia total [as	00610-1-1	Effluent Gross	7										6.4	mg/L	mg/L	Y
KY0045390	Airview WWTF	Hardin	001-1	05/31/2018	Nitrogen, ammonia total [as	00610-1-1	Effluent Gross		< .3957	lb/d			lb/d							N
KY0045390	Airview WWTF	Hardin	001-1	05/31/2018	Nitrogen, ammonia total [as	00610-1-1	Effluent Gross				1.72	lb/d	lb/d							N
KY0045390	Airview WWTF	Hardin	001-1	05/31/2018	Nitrogen, ammonia total [as	00610-1-1	Effluent Gross									< 1.89	mg/L			mg/L	N
KY0045390	Airview WWTF	Hardin	001-1	05/31/2018	Nitrogen, ammonia total [as	00610-1-1	Effluent Gross	37										8.2	mg/L	mg/L	Y
KY0045390	Airview WWTF	Hardin	001-1	10/31/2017	Nitrogen, ammonia total [as	00610-1-1	Effluent Gross		1.46	lb/d			lb/d							N
KY0045390	Airview WWTF	Hardin	001-1	10/31/2017	Nitrogen, ammonia total [as	00610-1-1	Effluent Gross				2.6	lb/d	lb/d							N
KY0045390	Airview WWTF	Hardin	001-1	10/31/2017	Nitrogen, ammonia total [as	00610-1-1	Effluent Gross	74								6.95	mg/L			mg/L	Y
KY0045390	Airview WWTF	Hardin	001-1	10/31/2017	Nitrogen, ammonia total [as	00610-1-1	Effluent Gross	100										12	mg/L	mg/L	Y
KY0045390	Airview WWTF	Hardin	001-1	09/30/2017	Nitrogen, ammonia total [as	00610-1-1	Effluent Gross		< 1.492	lb/d			lb/d							N
KY0045390	Airview WWTF	Hardin	001-1	09/30/2017	Nitrogen, ammonia total [as	00610-1-1	Effluent Gross	45			4	lb/d	lb/d							Y
KY0045390	Airview WWTF	Hardin	001-1	09/30/2017	Nitrogen, ammonia total [as	00610-1-1	Effluent Gross	50								< 5.99	mg/L			mg/L	Y
KY0045390	Airview WWTF	Hardin	001-1	09/30/2017	Nitrogen, ammonia total [as	00610-1-1	Effluent Gross	133										14	mg/L	mg/L	Y
KY0045390	Airview WWTF	Hardin	001-1	08/31/2017	Nitrogen, ammonia total [as	00610-1-1	Effluent Gross		< .0849	lb/d			lb/d							N
KY0045390	Airview WWTF	Hardin	001-1	08/31/2017	Nitrogen, ammonia total [as	00610-1-1	Effluent Gross				.26	lb/d	lb/d							N
KY0045390	Airview WWTF	Hardin	001-1	08/31/2017	Nitrogen, ammonia total [as	00610-1-1	Effluent Gross									< .533	mg/L			mg/L	N
KY0045390	Airview WWTF	Hardin	001-1	08/31/2017	Nitrogen, ammonia total [as	00610-1-1	Effluent Gross											1.2	mg/L	mg/L	N
KY0045390	Airview WWTF	Hardin	001-1	07/31/2017	Nitrogen, ammonia total [as	00610-1-1	Effluent Gross		< 1.04	lb/d			lb/d							N
KY0045390	Airview WWTF	Hardin	001-1	07/31/2017	Nitrogen, ammonia total [as	00610-1-1	Effluent Gross				< 1.04	lb/d	lb/d							N
KY0045390	Airview WWTF	Hardin	001-1	07/31/2017	Nitrogen, ammonia total [as	00610-1-1	Effluent Gross	21								< 4.84	mg/L			mg/L	Y
KY0045390	Airview WWTF	Hardin	001-1	07/31/2017	Nitrogen, ammonia total [as	00610-1-1	Effluent Gross	133										14	mg/L	mg/L	Y
KY0045390	Airview WWTF	Hardin	001-1	06/30/2017	Nitrogen, ammonia total [as	00610-1-1	Effluent Gross		< .826	lb/d			lb/d							N
KY0045390	Airview WWTF	Hardin	001-1	06/30/2017	Nitrogen, ammonia total [as	00610-1-1	Effluent Gross	16			3.2	lb/d	lb/d							Y
KY0045390	Airview WWTF	Hardin	001-1	06/30/2017	Nitrogen, ammonia total [as	00610-1-1	Effluent Gross									< 3.69	mg/L			mg/L	N
KY0045390	Airview WWTF	Hardin	001-1	06/30/2017	Nitrogen, ammonia total [as	00610-1-1	Effluent Gross	133										14	mg/L	mg/L	Y
KY0045390	Airview WWTF	Hardin	001-1	05/31/2017	Nitrogen, ammonia total [as	00610-1-1	Effluent Gross		< .919	lb/d			lb/d							N
KY0045390	Airview WWTF	Hardin	001-1	05/31/2017	Nitrogen, ammonia total [as	00610-1-1	Effluent Gross	27			3.5	lb/d	lb/d							Y

KY0045390	Airview WWTF	Hardin	001-1	05/31/2017	Nitrogen, ammonia total [as	00610-1-1	Effluent Gross									< 3.81	mg/L			mg/L	N
KY0045390	Airview WWTF	Hardin	001-1	05/31/2017	Nitrogen, ammonia total [as	00610-1-1	Effluent Gross	133										14	mg/L	mg/L	Y
KY0045390	Airview WWTF	Hardin	001-1	10/31/2016	Nitrogen, ammonia total [as	00610-1-1	Effluent Gross		< 1.39	lb/d			lb/d								N
KY0045390	Airview WWTF	Hardin	001-1	10/31/2016	Nitrogen, ammonia total [as	00610-1-1	Effluent Gross	95			5.37	lb/d	lb/d								Y
KY0045390	Airview WWTF	Hardin	001-1	10/31/2016	Nitrogen, ammonia total [as	00610-1-1	Effluent Gross	81								< 7.26	mg/L			mg/L	Y
KY0045390	Airview WWTF	Hardin	001-1	10/31/2016	Nitrogen, ammonia total [as	00610-1-1	Effluent Gross	367										28	mg/L	mg/L	Y
KY0045390	Airview WWTF	Hardin	001-1	09/30/2016	Nitrogen, ammonia total [as	00610-1-1	Effluent Gross	216	< 5.82	lb/d			lb/d								Y
KY0045390	Airview WWTF	Hardin	001-1	09/30/2016	Nitrogen, ammonia total [as	00610-1-1	Effluent Gross	536			17.56	lb/d	lb/d								Y
KY0045390	Airview WWTF	Hardin	001-1	09/30/2016	Nitrogen, ammonia total [as	00610-1-1	Effluent Gross	547								< 25.9	mg/L			mg/L	Y
KY0045390	Airview WWTF	Hardin	001-1	09/30/2016	Nitrogen, ammonia total [as	00610-1-1	Effluent Gross	1200										78	mg/L	mg/L	Y
KY0045390	Airview WWTF	Hardin	001-1	08/31/2016	Nitrogen, ammonia total [as	00610-1-1	Effluent Gross		1.66	lb/d			lb/d								N
KY0045390	Airview WWTF	Hardin	001-1	08/31/2016	Nitrogen, ammonia total [as	00610-1-1	Effluent Gross				2.7	lb/d	lb/d								N
KY0045390	Airview WWTF	Hardin	001-1	08/31/2016	Nitrogen, ammonia total [as	00610-1-1	Effluent Gross	111								8.44	mg/L			mg/L	Y
KY0045390	Airview WWTF	Hardin	001-1	08/31/2016	Nitrogen, ammonia total [as	00610-1-1	Effluent Gross	133										14	mg/L	mg/L	Y
KY0045390	Airview WWTF	Hardin	001-1	07/31/2016	Nitrogen, ammonia total [as	00610-1-1	Effluent Gross	66	3.05	lb/d			lb/d								Y
KY0045390	Airview WWTF	Hardin	001-1	07/31/2016	Nitrogen, ammonia total [as	00610-1-1	Effluent Gross	70			4.7	lb/d	lb/d								Y
KY0045390	Airview WWTF	Hardin	001-1	07/31/2016	Nitrogen, ammonia total [as	00610-1-1	Effluent Gross	250								13.98	mg/L			mg/L	Y
KY0045390	Airview WWTF	Hardin	001-1	07/31/2016	Nitrogen, ammonia total [as	00610-1-1	Effluent Gross	233										20	mg/L	mg/L	Y
KY0045390	Airview WWTF	Hardin	001-1	06/30/2016	Nitrogen, ammonia total [as	00610-1-1	Effluent Gross		< 1.41	lb/d			lb/d								N
KY0045390	Airview WWTF	Hardin	001-1	06/30/2016	Nitrogen, ammonia total [as	00610-1-1	Effluent Gross	66			4.587	lb/d	lb/d								Y
KY0045390	Airview WWTF	Hardin	001-1	06/30/2016	Nitrogen, ammonia total [as	00610-1-1	Effluent Gross	70								< 6.82	mg/L			mg/L	Y
KY0045390	Airview WWTF	Hardin	001-1	06/30/2016	Nitrogen, ammonia total [as	00610-1-1	Effluent Gross	267										22	mg/L	mg/L	Y
KY0045390	Airview WWTF	Hardin	001-1	05/31/2016	Nitrogen, ammonia total [as	00610-1-1	Effluent Gross	48	2.72	lb/d			lb/d								Y
KY0045390	Airview WWTF	Hardin	001-1	05/31/2016	Nitrogen, ammonia total [as	00610-1-1	Effluent Gross	26			3.47	lb/d	lb/d								Y
KY0045390	Airview WWTF	Hardin	001-1	05/31/2016	Nitrogen, ammonia total [as	00610-1-1	Effluent Gross	228								13.1	mg/L			mg/L	Y
KY0045390	Airview WWTF	Hardin	001-1	05/31/2016	Nitrogen, ammonia total [as	00610-1-1	Effluent Gross	167										16	mg/L	mg/L	Y
KY0045390	Airview WWTF	Hardin	001-1	10/31/2015	Nitrogen, ammonia total [as	00610-1-1	Effluent Gross		< .569	lb/d			lb/d								N
KY0045390	Airview WWTF	Hardin	001-1	10/31/2015	Nitrogen, ammonia total [as	00610-1-1	Effluent Gross				1.47	lb/d	lb/d								N
KY0045390	Airview WWTF	Hardin	001-1	10/31/2015	Nitrogen, ammonia total [as	00610-1-1	Effluent Gross									< 2.05	mg/L			mg/L	N
KY0045390	Airview WWTF	Hardin	001-1	10/31/2015	Nitrogen, ammonia total [as	00610-1-1	Effluent Gross	13										< 6.8	mg/L	mg/L	Y
KY0045390	Airview WWTF	Hardin	001-1	09/30/2015	Nitrogen, ammonia total [as	00610-1-1	Effluent Gross		< 1.72	lb/d			lb/d								N
KY0045390	Airview WWTF	Hardin	001-1	09/30/2015	Nitrogen, ammonia total [as	00610-1-1	Effluent Gross	18			3.26	lb/d	lb/d								Y
KY0045390	Airview WWTF	Hardin	001-1	09/30/2015	Nitrogen, ammonia total [as	00610-1-1	Effluent Gross	40								< 5.61	mg/L			mg/L	Y
KY0045390	Airview WWTF	Hardin	001-1	09/30/2015	Nitrogen, ammonia total [as	00610-1-1	Effluent Gross	183										17	mg/L	mg/L	Y
KY0045390	Airview WWTF	Hardin	001-1	08/31/2015	Nitrogen, ammonia total [as	00610-1-1	Effluent Gross		< .897	lb/d			lb/d								N
KY0045390	Airview WWTF	Hardin	001-1	08/31/2015	Nitrogen, ammonia total [as	00610-1-1	Effluent Gross				2.49	lb/d	lb/d								N
KY0045390	Airview WWTF	Hardin	001-1	08/31/2015	Nitrogen, ammonia total [as	00610-1-1	Effluent Gross	116								< 8.65	mg/L			mg/L	Y
KY0045390	Airview WWTF	Hardin	001-1	08/31/2015	Nitrogen, ammonia total [as	00610-1-1	Effluent Gross	200										18	mg/L	mg/L	Y
KY0045390	Airview WWTF	Hardin	001-1	07/31/2015	Nitrogen, ammonia total [as N]	00610-1-1	Effluent Gross		NODI **8**		NODI **8**		lb/d								N
KY0045390	Airview WWTF	Hardin	001-1	07/31/2015	Nitrogen, ammonia total [as	00610-1-1	Effluent Gross									NODI **8**		NODI **8**		mg/L	N
KY0045390	Airview WWTF	Hardin	001-1	06/30/2015	Nitrogen, ammonia total [as	00610-1-1	Effluent Gross	139	4.4	lb/d			lb/d								Y
KY0045390	Airview WWTF	Hardin	001-1	06/30/2015	Nitrogen, ammonia total [as	00610-1-1	Effluent Gross	112			5.85	lb/d	lb/d								Y
KY0045390	Airview WWTF	Hardin	001-1	06/30/2015	Nitrogen, ammonia total [as	00610-1-1	Effluent Gross	430								21.2	mg/L			mg/L	Y
KY0045390	Airview WWTF	Hardin	001-1	06/30/2015	Nitrogen, ammonia total [as	00610-1-1	Effluent Gross	383										29	mg/L	mg/L	Y
KY0045390	Airview WWTF	Hardin	001-1	05/31/2015	Nitrogen, ammonia total [as	00610-1-1	Effluent Gross	100	3.68	lb/d			lb/d								Y
KY0045390	Airview WWTF	Hardin	001-1	05/31/2015	Nitrogen, ammonia total [as	00610-1-1	Effluent Gross	108			5.75	lb/d	lb/d								Y
KY0045390	Airview WWTF	Hardin	001-1	05/31/2015	Nitrogen, ammonia total [as	00610-1-1	Effluent Gross	525								25	mg/L			mg/L	Y
KY0045390	Airview WWTF	Hardin	001-1	05/31/2015	Nitrogen, ammonia total [as	00610-1-1	Effluent Gross	450										33	mg/L	mg/L	Y
KY0045390	Airview WWTF	Hardin	001-1	10/31/2014	Nitrogen, ammonia total [as N]	00610-1-1	Effluent Gross		NODI **E**		NODI **E**		lb/d								N
KY0045390	Airview WWTF	Hardin	001-1	10/31/2014	Nitrogen, ammonia total [as	00610-1-1	Effluent Gross									NODI **E**		NODI **E**		mg/L	N
KY0045390	Airview WWTF	Hardin	001-1	04/30/2019	Nitrogen, ammonia total [as	00610-1-2	Effluent Gross						lb/d								N
KY0045390	Airview WWTF	Hardin	001-1	04/30/2019	Nitrogen, ammonia total [as	00610-1-2	Effluent Gross													mg/L	N
KY0045390	Airview WWTF	Hardin	001-1	03/31/2019	Nitrogen, ammonia total [as	00610-1-2	Effluent Gross		2.54	lb/d			lb/d								N
KY0045390	Airview WWTF	Hardin	001-1	03/31/2019	Nitrogen, ammonia total [as	00610-1-2	Effluent Gross				4.4	lb/d	lb/d								N
KY0045390	Airview WWTF	Hardin	001-1	03/31/2019	Nitrogen, ammonia total [as	00610-1-2	Effluent Gross	96								19.58	mg/L			mg/L	Y
KY0045390	Airview WWTF	Hardin	001-1	03/31/2019	Nitrogen, ammonia total [as	00610-1-2	Effluent Gross	87										28	mg/L	mg/L	Y
KY0045390	Airview WWTF	Hardin	001-1	02/28/2019	Nitrogen, ammonia total [as	00610-1-2	Effluent Gross	4	< 4.797	lb/d			lb/d								Y
KY0045390	Airview WWTF	Hardin	001-1	02/28/2019	Nitrogen, ammonia total [as	00610-1-2	Effluent Gross	138			16.4	lb/d	lb/d								Y
KY0045390	Airview WWTF	Hardin	001-1	02/28/2019	Nitrogen, ammonia total [as	00610-1-2	Effluent Gross									< 6.61	mg/L			mg/L	N
KY0045390	Airview WWTF	Hardin	001-1	02/28/2019	Nitrogen, ammonia total [as	00610-1-2	Effluent Gross	7										16	mg/L	mg/L	Y
KY0045390	Airview WWTF	Hardin	001-1	01/31/2019	Nitrogen, ammonia total [as	00610-1-2	Effluent Gross		< .7296	lb/d			lb/d								N
KY0045390	Airview WWTF	Hardin	001-1	01/31/2019	Nitrogen, ammonia total [as	00610-1-2	Effluent Gross				2.08	lb/d	lb/d								N
KY0045390	Airview WWTF	Hardin	001-1	01/31/2019	Nitrogen, ammonia total [as	00610-1-2	Effluent Gross									< 3.25	mg/L			mg/L	N
KY0045390	Airview WWTF	Hardin	001-1	01/31/2019	Nitrogen, ammonia total [as	00610-1-2	Effluent Gross											9.2	mg/L	mg/L	N
KY0045390	Airview WWTF	Hardin	001-1	12/31/2018	Nitrogen, ammonia total [as	00610-1-2	Effluent Gross						lb/d								N
KY0045390	Airview WWTF	Hardin	001-1	12/31/2018	Nitrogen, ammonia total [as	00610-1-2	Effluent Gross													mg/L	N
KY0045390	Airview WWTF	Hardin	001-1	11/30/2018	Nitrogen, ammonia total [as	00610-1-2	Effluent Gross		3.68	lb/d			lb/d								N
KY0045390	Airview WWTF	Hardin	001-1	11/30/2018	Nitrogen, ammonia total [as	00610-1-2	Effluent Gross	22			8.41	lb/d	lb/d								Y
KY0045390	Airview WWTF	Hardin	001-1	11/30/2018	Nitrogen, ammonia total [as	00610-1-2	Effluent Gross									8.125	mg/L			mg/L	N
KY0045390	Airview WWTF	Hardin	001-1	11/30/2018	Nitrogen, ammonia total [as	00610-1-2	Effluent Gross	7										16	mg/L	mg/L	Y
KY0045390	Airview WWTF	Hardin	001-1	04/30/2018	Nitrogen, ammonia total [as	00610-1-2	Effluent Gross		< 1.16	lb/d			lb/d								N
KY0045390	Airview WWTF	Hardin	001-1	04/30/2018	Nitrogen, ammonia total [as	00610-1-2	Effluent Gross				3.52	lb/d	lb/d								N
KY0045390	Airview WWTF	Hardin	001-1	04/30/2018	Nitrogen, ammonia total [as	00610-1-2	Effluent Gross									< 5.86	mg/L			mg/L	N
KY0045390	Airview WWTF	Hardin	001-1	04/30/2018	Nitrogen, ammonia total [as	00610-1-2	Effluent Gross	20										18	mg/L	mg/L	Y
KY0045390	Airview WWTF	Hardin	001-1	03/31/2018	Nitrogen, ammonia total [as	00610-1-2	Effluent Gross		< .314	lb/d			lb/d								N
KY0045390	Airview WWTF	Hardin	001-1	03/31/2018	Nitrogen, ammonia total [as	00610-1-2	Effluent Gross				1.04	lb/d	lb/d								N
KY0045390	Airview WWTF	Hardin	001-1	03/31/2018	Nitrogen, ammonia total [as	00610-1-2	Effluent Gross									< 1.49	mg/L			mg/L	N
KY0045390	Airview WWTF	Hardin	001-1	03/31/2018	Nitrogen, ammonia total [as	00610-1-2	Effluent Gross											4.8	mg/L	mg/L	N
KY0045390	Airview WWTF	Hardin	001-1	02/28/2018	Nitrogen, ammonia total [as	00610-1-2	Effluent Gross		< 1.215	lb/d			lb/d								N
KY0045390	Airview WWTF	Hardin	001-1	02/28/2018	Nitrogen, ammonia total [as	00610-1-2	Effluent Gross				2.48	lb/d	lb/d								N
KY0045390	Airview WWTF	Hardin	001-1	02/28/2018	Nitrogen, ammonia total [as	00610-1-2	Effluent Gross									< 4.32	mg/L			mg/L	N
KY0045390	Airview WWTF	Hardin	001-1	02/28/2018	Nitrogen, ammonia total [as	00610-1-2	Effluent Gross											12	mg/L	mg/L	N
KY0045390	Airview WWTF	Hardin	001-1	01/31/2018	Nitrogen, ammonia total [as	00610-1-2	Effluent Gross		< .053	lb/d			lb/d								N
KY0045390	Airview WWTF	Hardin	001-1	01/31/2018	Nitrogen, ammonia total [as	00610-1-2	Effluent Gross				< .52	lb/d	lb/d								N
KY0045390	Airview WWTF	Hardin	001-1	01/31/2018	Nitrogen, ammonia total [as	00610-1-2	Effluent Gross									< .25	mg/L			mg/L	N
KY0045390	Airview WWTF	Hardin	001-1	01/31/2018	Nitrogen, ammonia total [as	00610-1-2	Effluent Gross											< .25	mg/L	mg/L	N
KY0045390	Airview WWTF	Hardin	001-1	12/31/2017	Nitrogen, ammonia total [as	00610-1-2	Effluent Gross		< .0576	lb/d			lb/d								N
KY0045390	Airview WWTF	Hardin	001-1	12/31/2017	Nitrogen, ammonia total [as	00610-1-2	Effluent Gross				.084	lb/d	lb/d								N
KY0045390	Airview WWTF	Hardin	001-1	12/31/2017	Nitrogen, ammonia total [as	00610-1-2	Effluent Gross									< .288	mg/L			mg/L	N
KY0045390	Airview WWTF	Hardin	001-1	12/31/2017	Nitrogen, ammonia total [as	00610-1-2	Effluent Gross											.4	mg/L	mg/L	N
KY0045390	Airview WWTF	Hardin	001-1	11/30/2017	Nitrogen, ammonia total [as	00610-1-2	Effluent Gross		< .566	lb/d			lb/d								N
KY0045390	Airview WWTF	Hardin	001-1	11/30/2017	Nitrogen, ammonia total [as	00610-1-2	Effluent Gross				2.5	lb/d	lb/d								N
KY0045390	Airview WWTF	Hardin	001-1	11/30/2017	Nitrogen, ammonia total [as	00610-1-2	Effluent Gross									< 3.5	mg/L			mg/L	N
KY0045390	Airview WWTF	Hardin	001-1	11/30/2017	Nitrogen, ammonia total [as	00610-1-2	Effluent Gross											12	mg/L	mg/L	N
KY0045390	Airview WWTF	Hardin	001-1	04/30/2017	Nitrogen, ammonia total [as	00610-1-2	Effluent Gross		< .732	lb/d			lb/d								N
KY0045390	Airview WWTF	Hardin	001-1	04/30/2017	Nitrogen, ammonia total [as	00610-1-2	Effluent Gross				2.6	lb/d	lb/d								N
KY0045390	Airview WWTF	Hardin	001-1	04/30/2017	Nitrogen, ammonia total [as	00610-1-2	Effluent Gross									< 3.33	mg/L			mg/L	N
KY0045390	Airview WWTF	Hardin	001-1	04/30/2017	Nitrogen, ammonia total [as	00610-1-2	Effluent Gross											12	mg/L	mg/L	N
KY0045390	Airview WWTF	Hardin	001-1	03/31/2017	Nitrogen, ammonia total [as	00610-1-2	Effluent Gross		< .0689	lb/d			lb/d								N
KY0045390	Airview WWTF	Hardin	001-1	03/31/2017	Nitrogen, ammonia total [as	00610-1-2	Effluent Gross				< .109	lb/d	lb/d								N
KY0045390	Airview WWTF	Hardin	001-1	03/31/2017	Nitrogen, ammonia total [as	00610-1-2	Effluent Gross									< .25	mg/L			mg/L	N
KY0045390	Airview WWTF	Hardin	001-1	03/31/2017	Nitrogen, ammonia total [as	00610-1-2	Effluent Gross											< .25	mg/L	mg/L	N
KY0045390	Airview WWTF	Hardin	001-1	02/28/2017	Nitrogen, ammonia total [as	00610-1-2	Effluent Gross		.0652	lb/d			lb/d								N
KY0045390	Airview WWTF	Hardin	001-1	02/28/2017	Nitrogen, ammonia total [as	00610-1-2	Effluent Gross				.114	lb/d	lb/d								N
KY0045390	Airview WWTF	Hardin	001-1	02/28/2017	Nitrogen, ammonia total [as	00610-1-2	Effluent Gross									2.224	mg/L			mg/L	N
KY0045390	Airview WWTF	Hardin	001-1	02/28/2017	Nitrogen, ammonia total [as	00610-1-2	Effluent Gross											7.6	mg/L	mg/L	N
KY0045390	Airview WWTF	Hardin	001-1	01/31/2017	Nitrogen, ammonia total [as	00610-1-2	Effluent Gross		< .415	lb/d			lb/d								N
KY0045390	Airview WWTF	Hardin	001-1	01/31/2017	Nitrogen, ammonia total [as	00610-1-2	Effluent Gross				.98	lb/d	lb/d								N
KY0045390	Airview WWTF	Hardin	001-1	01/31/2017	Nitrogen, ammonia total [as	00610-1-2	Effluent Gross									< 5.24	mg/L			mg/L	N
KY0045390	Airview WWTF	Hardin	001-1	01/31/2017	Nitrogen, ammonia total [as	00610-1-2	Effluent Gross											9.8	mg/L	mg/L	N
KY0045390	Airview WWTF	Hardin	001-1	12/31/2016	Nitrogen, ammonia total [as	00610-1-2	Effluent Gross		< .356	lb/d			lb/d								N
KY0045390	Airview WWTF	Hardin	001-1	12/31/2016	Nitrogen, ammonia total [as	00610-1-2	Effluent Gross				.92	lb/d	lb/d								N
KY0045390	Airview WWTF	Hardin	001-1	12/31/2016	Nitrogen, ammonia total [as	00610-1-2	Effluent Gross									< 1.78	mg/L			mg/L	N

KY0045390	Airview WWTF	Hardin	001-1	12/31/2016	Nitrogen, ammonia total [as	00610-1-2	Effluent Gross											4.6	mg/L	mg/L	N
KY0045390	Airview WWTF	Hardin	001-1	11/30/2016	Nitrogen, ammonia total [as	00610-1-2	Effluent Gross		.413	lb/d			lb/d								N
KY0045390	Airview WWTF	Hardin	001-1	11/30/2016	Nitrogen, ammonia total [as	00610-1-2	Effluent Gross				.56	lb/d	lb/d								N
KY0045390	Airview WWTF	Hardin	001-1	11/30/2016	Nitrogen, ammonia total [as	00610-1-2	Effluent Gross									< .99	mg/L			mg/L	N
KY0045390	Airview WWTF	Hardin	001-1	11/30/2016	Nitrogen, ammonia total [as	00610-1-2	Effluent Gross											.78	mg/L	mg/L	N
KY0045390	Airview WWTF	Hardin	001-1	04/30/2016	Nitrogen, ammonia total [as	00610-1-2	Effluent Gross		< 2.64	lb/d			lb/d								N
KY0045390	Airview WWTF	Hardin	001-1	04/30/2016	Nitrogen, ammonia total [as	00610-1-2	Effluent Gross	5			7.24	lb/d	lb/d								Y
KY0045390	Airview WWTF	Hardin	001-1	04/30/2016	Nitrogen, ammonia total [as	00610-1-2	Effluent Gross	7								< 10.74	mg/L			mg/L	Y
KY0045390	Airview WWTF	Hardin	001-1	04/30/2016	Nitrogen, ammonia total [as	00610-1-2	Effluent Gross	87										28	mg/L	mg/L	Y
KY0045390	Airview WWTF	Hardin	001-1	03/31/2016	Nitrogen, ammonia total [as	00610-1-2	Effluent Gross		1.54	lb/d			lb/d								N
KY0045390	Airview WWTF	Hardin	001-1	03/31/2016	Nitrogen, ammonia total [as	00610-1-2	Effluent Gross				4.003	lb/d	lb/d								N
KY0045390	Airview WWTF	Hardin	001-1	03/31/2016	Nitrogen, ammonia total [as	00610-1-2	Effluent Gross									6.82	mg/L			mg/L	N
KY0045390	Airview WWTF	Hardin	001-1	03/31/2016	Nitrogen, ammonia total [as	00610-1-2	Effluent Gross	7										16	mg/L	mg/L	Y
KY0045390	Airview WWTF	Hardin	001-1	02/29/2016	Nitrogen, ammonia total [as	00610-1-2	Effluent Gross		< .964	lb/d			lb/d								N
KY0045390	Airview WWTF	Hardin	001-1	02/29/2016	Nitrogen, ammonia total [as	00610-1-2	Effluent Gross				2.7	lb/d	lb/d								N
KY0045390	Airview WWTF	Hardin	001-1	02/29/2016	Nitrogen, ammonia total [as	00610-1-2	Effluent Gross									< 4.325	mg/L			mg/L	N
KY0045390	Airview WWTF	Hardin	001-1	02/29/2016	Nitrogen, ammonia total [as	00610-1-2	Effluent Gross											12	mg/L	mg/L	N
KY0045390	Airview WWTF	Hardin	001-1	01/31/2016	Nitrogen, ammonia total [as	00610-1-2	Effluent Gross		< .468	lb/d			lb/d								N
KY0045390	Airview WWTF	Hardin	001-1	01/31/2016	Nitrogen, ammonia total [as	00610-1-2	Effluent Gross				.911	lb/d	lb/d								N
KY0045390	Airview WWTF	Hardin	001-1	01/31/2016	Nitrogen, ammonia total [as	00610-1-2	Effluent Gross									< 2.13	mg/L			mg/L	N
KY0045390	Airview WWTF	Hardin	001-1	01/31/2016	Nitrogen, ammonia total [as	00610-1-2	Effluent Gross											4.1	mg/L	mg/L	N
KY0045390	Airview WWTF	Hardin	001-1	12/31/2015	Nitrogen, ammonia total [as	00610-1-2	Effluent Gross		1.4	lb/d			lb/d								N
KY0045390	Airview WWTF	Hardin	001-1	12/31/2015	Nitrogen, ammonia total [as	00610-1-2	Effluent Gross				2.6	lb/d	lb/d								N
KY0045390	Airview WWTF	Hardin	001-1	12/31/2015	Nitrogen, ammonia total [as	00610-1-2	Effluent Gross									6.56	mg/L			mg/L	N
KY0045390	Airview WWTF	Hardin	001-1	12/31/2015	Nitrogen, ammonia total [as	00610-1-2	Effluent Gross											12	mg/L	mg/L	N
KY0045390	Airview WWTF	Hardin	001-1	11/30/2015	Nitrogen, ammonia total [as	00610-1-2	Effluent Gross		1.06	lb/d			lb/d								N
KY0045390	Airview WWTF	Hardin	001-1	11/30/2015	Nitrogen, ammonia total [as	00610-1-2	Effluent Gross				2.02	lb/d	lb/d								N
KY0045390	Airview WWTF	Hardin	001-1	11/30/2015	Nitrogen, ammonia total [as	00610-1-2	Effluent Gross									5.35	mg/L			mg/L	N
KY0045390	Airview WWTF	Hardin	001-1	11/30/2015	Nitrogen, ammonia total [as	00610-1-2	Effluent Gross											11	mg/L	mg/L	N
KY0045390	Airview WWTF	Hardin	001-1	04/30/2015	Nitrogen, ammonia total [as	00610-1-2	Effluent Gross		2.48	lb/d			lb/d								N
KY0045390	Airview WWTF	Hardin	001-1	04/30/2015	Nitrogen, ammonia total [as	00610-1-2	Effluent Gross				4.2	lb/d	lb/d								N
KY0045390	Airview WWTF	Hardin	001-1	04/30/2015	Nitrogen, ammonia total [as	00610-1-2	Effluent Gross	28								12.8	mg/L			mg/L	Y
KY0045390	Airview WWTF	Hardin	001-1	04/30/2015	Nitrogen, ammonia total [as	00610-1-2	Effluent Gross	67										25	mg/L	mg/L	Y
KY0045390	Airview WWTF	Hardin	001-1	03/31/2015	Nitrogen, ammonia total [as	00610-1-2	Effluent Gross		2.16	lb/d			lb/d								N
KY0045390	Airview WWTF	Hardin	001-1	03/31/2015	Nitrogen, ammonia total [as	00610-1-2	Effluent Gross				3.43	lb/d	lb/d								N
KY0045390	Airview WWTF	Hardin	001-1	03/31/2015	Nitrogen, ammonia total [as	00610-1-2	Effluent Gross	27								12.7	mg/L			mg/L	Y
KY0045390	Airview WWTF	Hardin	001-1	03/31/2015	Nitrogen, ammonia total [as	00610-1-2	Effluent Gross	13										17	mg/L	mg/L	Y
KY0045390	Airview WWTF	Hardin	001-1	02/28/2015	Nitrogen, ammonia total [as	00610-1-2	Effluent Gross		4.38	lb/d			lb/d								N
KY0045390	Airview WWTF	Hardin	001-1	02/28/2015	Nitrogen, ammonia total [as	00610-1-2	Effluent Gross				5.21	lb/d	lb/d								N
KY0045390	Airview WWTF	Hardin	001-1	02/28/2015	Nitrogen, ammonia total [as	00610-1-2	Effluent Gross	102								20.2	mg/L			mg/L	Y
KY0045390	Airview WWTF	Hardin	001-1	02/28/2015	Nitrogen, ammonia total [as	00610-1-2	Effluent Gross	67										25	mg/L	mg/L	Y
KY0045390	Airview WWTF	Hardin	001-1	01/31/2015	Nitrogen, ammonia total [as	00610-1-2	Effluent Gross	98	9.11	lb/d			lb/d								Y
KY0045390	Airview WWTF	Hardin	001-1	01/31/2015	Nitrogen, ammonia total [as	00610-1-2	Effluent Gross	261			24.9	lb/d	lb/d								Y
KY0045390	Airview WWTF	Hardin	001-1	01/31/2015	Nitrogen, ammonia total [as	00610-1-2	Effluent Gross	70								17	mg/L			mg/L	Y
KY0045390	Airview WWTF	Hardin	001-1	01/31/2015	Nitrogen, ammonia total [as	00610-1-2	Effluent Gross	40										21	mg/L	mg/L	Y
KY0045390	Airview WWTF	Hardin	001-1	12/31/2014	Nitrogen, ammonia total [as	00610-1-2	Effluent Gross	9	5.02	lb/d			lb/d								Y
KY0045390	Airview WWTF	Hardin	001-1	12/31/2014	Nitrogen, ammonia total [as	00610-1-2	Effluent Gross	2			7.01	lb/d	lb/d								Y
KY0045390	Airview WWTF	Hardin	001-1	12/31/2014	Nitrogen, ammonia total [as	00610-1-2	Effluent Gross	163								26.3	mg/L			mg/L	Y
KY0045390	Airview WWTF	Hardin	001-1	12/31/2014	Nitrogen, ammonia total [as	00610-1-2	Effluent Gross	107										31	mg/L	mg/L	Y
KY0045390	Airview WWTF	Hardin	001-1	11/30/2014	Nitrogen, ammonia total [as N]	00610-1-2	Effluent Gross		NODI **E**		NODI **E**		lb/d								N
KY0045390	Airview WWTF	Hardin	001-1	11/30/2014	Nitrogen, ammonia total [as	00610-1-2	Effluent Gross									NODI **E**		NODI **E**		mg/L	N
KY0045390	Airview WWTF	Hardin	001-1	09/30/2019	Flow, in conduit or thru	50050-1-0	Effluent Gross		1.477	MGD			MGD								N
KY0045390	Airview WWTF	Hardin	001-1	09/30/2019	Flow, in conduit or thru	50050-1-0	Effluent Gross				1.477	MGD	MGD								N
KY0045390	Airview WWTF	Hardin	001-1	08/31/2019	Flow, in conduit or thru	50050-1-0	Effluent Gross						MGD								N
KY0045390	Airview WWTF	Hardin	001-1	07/31/2019	Flow, in conduit or thru	50050-1-0	Effluent Gross						MGD								N
KY0045390	Airview WWTF	Hardin	001-1	06/30/2019	Flow, in conduit or thru	50050-1-0	Effluent Gross						MGD								N
KY0045390	Airview WWTF	Hardin	001-1	05/31/2019	Flow, in conduit or thru	50050-1-0	Effluent Gross						MGD								N
KY0045390	Airview WWTF	Hardin	001-1	04/30/2019	Flow, in conduit or thru	50050-1-0	Effluent Gross						MGD								N
KY0045390	Airview WWTF	Hardin	001-1	03/31/2019	Flow, in conduit or thru	50050-1-0	Effluent Gross		.01857	MGD			MGD								N
KY0045390	Airview WWTF	Hardin	001-1	03/31/2019	Flow, in conduit or thru	50050-1-0	Effluent Gross				.026	MGD	MGD								N
KY0045390	Airview WWTF	Hardin	001-1	02/28/2019	Flow, in conduit or thru	50050-1-0	Effluent Gross		.028225	MGD			MGD								N
KY0045390	Airview WWTF	Hardin	001-1	02/28/2019	Flow, in conduit or thru	50050-1-0	Effluent Gross				.034	MGD	MGD								N
KY0045390	Airview WWTF	Hardin	001-1	01/31/2019	Flow, in conduit or thru	50050-1-0	Effluent Gross		.02552	MGD			MGD								N
KY0045390	Airview WWTF	Hardin	001-1	01/31/2019	Flow, in conduit or thru	50050-1-0	Effluent Gross				.027	MGD	MGD								N
KY0045390	Airview WWTF	Hardin	001-1	12/31/2018	Flow, in conduit or thru	50050-1-0	Effluent Gross						MGD								N
KY0045390	Airview WWTF	Hardin	001-1	11/30/2018	Flow, in conduit or thru	50050-1-0	Effluent Gross		.02559	MGD			MGD								N
KY0045390	Airview WWTF	Hardin	001-1	11/30/2018	Flow, in conduit or thru	50050-1-0	Effluent Gross				.028	MGD	MGD								N
KY0045390	Airview WWTF	Hardin	001-1	10/31/2018	Flow, in conduit or thru	50050-1-0	Effluent Gross		.0235	MGD			MGD								N
KY0045390	Airview WWTF	Hardin	001-1	10/31/2018	Flow, in conduit or thru	50050-1-0	Effluent Gross				.025	MGD	MGD								N
KY0045390	Airview WWTF	Hardin	001-1	09/30/2018	Flow, in conduit or thru	50050-1-0	Effluent Gross		.02575	MGD			MGD								N
KY0045390	Airview WWTF	Hardin	001-1	09/30/2018	Flow, in conduit or thru	50050-1-0	Effluent Gross				.032	MGD	MGD								N
KY0045390	Airview WWTF	Hardin	001-1	08/31/2018	Flow, in conduit or thru	50050-1-0	Effluent Gross		.02433	MGD			MGD								N
KY0045390	Airview WWTF	Hardin	001-1	08/31/2018	Flow, in conduit or thru	50050-1-0	Effluent Gross				.02433	MGD	MGD								N
KY0045390	Airview WWTF	Hardin	001-1	07/31/2018	Flow, in conduit or thru	50050-1-0	Effluent Gross		.02375	MGD			MGD								N
KY0045390	Airview WWTF	Hardin	001-1	07/31/2018	Flow, in conduit or thru	50050-1-0	Effluent Gross				.025	MGD	MGD								N
KY0045390	Airview WWTF	Hardin	001-1	06/30/2018	Flow, in conduit or thru	50050-1-0	Effluent Gross		.08075	MGD			MGD								N
KY0045390	Airview WWTF	Hardin	001-1	06/30/2018	Flow, in conduit or thru	50050-1-0	Effluent Gross				.25	MGD	MGD								N
KY0045390	Airview WWTF	Hardin	001-1	05/31/2018	Flow, in conduit or thru	50050-1-0	Effluent Gross		.0252	MGD			MGD								N
KY0045390	Airview WWTF	Hardin	001-1	05/31/2018	Flow, in conduit or thru	50050-1-0	Effluent Gross				.027	MGD	MGD								N
KY0045390	Airview WWTF	Hardin	001-1	04/30/2018	Flow, in conduit or thru	50050-1-0	Effluent Gross		.02475	MGD			MGD								N
KY0045390	Airview WWTF	Hardin	001-1	04/30/2018	Flow, in conduit or thru	50050-1-0	Effluent Gross				.026	MGD	MGD								N
KY0045390	Airview WWTF	Hardin	001-1	03/31/2018	Flow, in conduit or thru	50050-1-0	Effluent Gross		.0238	MGD			MGD								N
KY0045390	Airview WWTF	Hardin	001-1	03/31/2018	Flow, in conduit or thru	50050-1-0	Effluent Gross				.026	MGD	MGD								N
KY0045390	Airview WWTF	Hardin	001-1	02/28/2018	Flow, in conduit or thru	50050-1-0	Effluent Gross		.025	MGD			MGD								N
KY0045390	Airview WWTF	Hardin	001-1	02/28/2018	Flow, in conduit or thru	50050-1-0	Effluent Gross				.026	MGD	MGD								N
KY0045390	Airview WWTF	Hardin	001-1	01/31/2018	Flow, in conduit or thru	50050-1-0	Effluent Gross		.06551	MGD			MGD								N
KY0045390	Airview WWTF	Hardin	001-1	01/31/2018	Flow, in conduit or thru	50050-1-0	Effluent Gross				.25	MGD	MGD								N
KY0045390	Airview WWTF	Hardin	001-1	12/31/2017	Flow, in conduit or thru	50050-1-0	Effluent Gross		.02375	MGD			MGD								N
KY0045390	Airview WWTF	Hardin	001-1	12/31/2017	Flow, in conduit or thru	50050-1-0	Effluent Gross				.025	MGD	MGD								N
KY0045390	Airview WWTF	Hardin	001-1	11/30/2017	Flow, in conduit or thru	50050-1-0	Effluent Gross		.01801	MGD			MGD								N
KY0045390	Airview WWTF	Hardin	001-1	11/30/2017	Flow, in conduit or thru	50050-1-0	Effluent Gross				.0351	MGD	MGD								N
KY0045390	Airview WWTF	Hardin	001-1	10/31/2017	Flow, in conduit or thru	50050-1-0	Effluent Gross		.02475	MGD			MGD								N
KY0045390	Airview WWTF	Hardin	001-1	10/31/2017	Flow, in conduit or thru	50050-1-0	Effluent Gross				.029	MGD	MGD								N
KY0045390	Airview WWTF	Hardin	001-1	09/30/2017	Flow, in conduit or thru	50050-1-0	Effluent Gross		.027	MGD			MGD								N
KY0045390	Airview WWTF	Hardin	001-1	09/30/2017	Flow, in conduit or thru	50050-1-0	Effluent Gross				.034	MGD	MGD								N
KY0045390	Airview WWTF	Hardin	001-1	08/31/2017	Flow, in conduit or thru	50050-1-0	Effluent Gross		.01986	MGD			MGD								N
KY0045390	Airview WWTF	Hardin	001-1	08/31/2017	Flow, in conduit or thru	50050-1-0	Effluent Gross				.026	MGD	MGD								N
KY0045390	Airview WWTF	Hardin	001-1	07/31/2017	Flow, in conduit or thru	50050-1-0	Effluent Gross		.026	MGD			MGD								N
KY0045390	Airview WWTF	Hardin	001-1	07/31/2017	Flow, in conduit or thru	50050-1-0	Effluent Gross				.032	MGD	MGD								N
KY0045390	Airview WWTF	Hardin	001-1	06/30/2017	Flow, in conduit or thru	50050-1-0	Effluent Gross		.0255	MGD			MGD								N
KY0045390	Airview WWTF	Hardin	001-1	06/30/2017	Flow, in conduit or thru	50050-1-0	Effluent Gross				.027	MGD	MGD								N
KY0045390	Airview WWTF	Hardin	001-1	05/31/2017	Flow, in conduit or thru	50050-1-0	Effluent Gross		.0275	MGD			MGD								N
KY0045390	Airview WWTF	Hardin	001-1	05/31/2017	Flow, in conduit or thru	50050-1-0	Effluent Gross				.029	MGD	MGD								N
KY0045390	Airview WWTF	Hardin	001-1	04/30/2017	Flow, in conduit or thru	50050-1-0	Effluent Gross		.0325	MGD			MGD								N
KY0045390	Airview WWTF	Hardin	001-1	04/30/2017	Flow, in conduit or thru	50050-1-0	Effluent Gross				.054	MGD	MGD								N
KY0045390	Airview WWTF	Hardin	001-1	03/31/2017	Flow, in conduit or thru	50050-1-0	Effluent Gross		.033	MGD			MGD								N
KY0045390	Airview WWTF	Hardin	001-1	03/31/2017	Flow, in conduit or thru	50050-1-0	Effluent Gross				.052	MGD	MGD								N
KY0045390	Airview WWTF	Hardin	001-1	02/28/2017	Flow, in conduit or thru	50050-1-0	Effluent Gross		.0162	MGD			MGD								N
KY0045390	Airview WWTF	Hardin	001-1	02/28/2017	Flow, in conduit or thru	50050-1-0	Effluent Gross				.024	MGD	MGD								N
KY0045390	Airview WWTF	Hardin	001-1	01/31/2017	Flow, in conduit or thru	50050-1-0	Effluent Gross		.01687	MGD			MGD								N
KY0045390	Airview WWTF	Hardin	001-1	01/31/2017	Flow, in conduit or thru	50050-1-0	Effluent Gross				.024	MGD	MGD								N
KY0045390	Airview WWTF	Hardin	001-1	12/31/2016	Flow, in conduit or thru	50050-1-0	Effluent Gross		.024	MGD			MGD								N
KY0045390	Airview WWTF	Hardin	001-1	12/31/2016	Flow, in conduit or thru	50050-1-0	Effluent Gross				.024	MGD	MGD								N

KY0045390	Airview WWTF	Hardin	001-1	11/30/2016	Flow, in conduit or thru	50050-1-0	Effluent Gross		.024	MGD			MGD								N
KY0045390	Airview WWTF	Hardin	001-1	11/30/2016	Flow, in conduit or thru	50050-1-0	Effluent Gross				.024	MGD	MGD								N
KY0045390	Airview WWTF	Hardin	001-1	10/31/2016	Flow, in conduit or thru	50050-1-0	Effluent Gross		.01825	MGD			MGD								N
KY0045390	Airview WWTF	Hardin	001-1	10/31/2016	Flow, in conduit or thru	50050-1-0	Effluent Gross				.025	MGD	MGD								N
KY0045390	Airview WWTF	Hardin	001-1	09/30/2016	Flow, in conduit or thru	50050-1-0	Effluent Gross		.07575	MGD			MGD								N
KY0045390	Airview WWTF	Hardin	001-1	09/30/2016	Flow, in conduit or thru	50050-1-0	Effluent Gross				.23	MGD	MGD								N
KY0045390	Airview WWTF	Hardin	001-1	08/31/2016	Flow, in conduit or thru	50050-1-0	Effluent Gross		.0244	MGD			MGD								N
KY0045390	Airview WWTF	Hardin	001-1	08/31/2016	Flow, in conduit or thru	50050-1-0	Effluent Gross				.028	MGD	MGD								N
KY0045390	Airview WWTF	Hardin	001-1	07/31/2016	Flow, in conduit or thru	50050-1-0	Effluent Gross		.0265	MGD			MGD								N
KY0045390	Airview WWTF	Hardin	001-1	07/31/2016	Flow, in conduit or thru	50050-1-0	Effluent Gross				.028	MGD	MGD								N
KY0045390	Airview WWTF	Hardin	001-1	06/30/2016	Flow, in conduit or thru	50050-1-0	Effluent Gross		.025	MGD			MGD								N
KY0045390	Airview WWTF	Hardin	001-1	06/30/2016	Flow, in conduit or thru	50050-1-0	Effluent Gross				.028	MGD	MGD								N
KY0045390	Airview WWTF	Hardin	001-1	05/31/2016	Flow, in conduit or thru	50050-1-0	Effluent Gross		.0245	MGD			MGD								N
KY0045390	Airview WWTF	Hardin	001-1	05/31/2016	Flow, in conduit or thru	50050-1-0	Effluent Gross				.026	MGD	MGD								N
KY0045390	Airview WWTF	Hardin	001-1	04/30/2016	Flow, in conduit or thru	50050-1-0	Effluent Gross		.02691	MGD			MGD								N
KY0045390	Airview WWTF	Hardin	001-1	04/30/2016	Flow, in conduit or thru	50050-1-0	Effluent Gross				.031	MGD	MGD								N
KY0045390	Airview WWTF	Hardin	001-1	03/31/2016	Flow, in conduit or thru	50050-1-0	Effluent Gross		.0262	MGD			MGD								N
KY0045390	Airview WWTF	Hardin	001-1	03/31/2016	Flow, in conduit or thru	50050-1-0	Effluent Gross				.03	MGD	MGD								N
KY0045390	Airview WWTF	Hardin	001-1	02/29/2016	Flow, in conduit or thru	50050-1-0	Effluent Gross		.027	MGD			MGD								N
KY0045390	Airview WWTF	Hardin	001-1	02/29/2016	Flow, in conduit or thru	50050-1-0	Effluent Gross				.03	MGD	MGD								N
KY0045390	Airview WWTF	Hardin	001-1	01/31/2016	Flow, in conduit or thru	50050-1-0	Effluent Gross		.026	MGD			MGD								N
KY0045390	Airview WWTF	Hardin	001-1	01/31/2016	Flow, in conduit or thru	50050-1-0	Effluent Gross				.028	MGD	MGD								N
KY0045390	Airview WWTF	Hardin	001-1	12/31/2015	Flow, in conduit or thru	50050-1-0	Effluent Gross		.02475	MGD			MGD								N
KY0045390	Airview WWTF	Hardin	001-1	12/31/2015	Flow, in conduit or thru	50050-1-0	Effluent Gross				.026	MGD	MGD								N
KY0045390	Airview WWTF	Hardin	001-1	11/30/2015	Flow, in conduit or thru	50050-1-0	Effluent Gross		.02425	MGD			MGD								N
KY0045390	Airview WWTF	Hardin	001-1	11/30/2015	Flow, in conduit or thru	50050-1-0	Effluent Gross				.026	MGD	MGD								N
KY0045390	Airview WWTF	Hardin	001-1	10/31/2015	Flow, in conduit or thru	50050-1-0	Effluent Gross		.004717	MGD			MGD								N
KY0045390	Airview WWTF	Hardin	001-1	10/31/2015	Flow, in conduit or thru	50050-1-0	Effluent Gross				.135	MGD	MGD								N
KY0045390	Airview WWTF	Hardin	001-1	09/30/2015	Flow, in conduit or thru	50050-1-0	Effluent Gross		.04425	MGD			MGD								N
KY0045390	Airview WWTF	Hardin	001-1	09/30/2015	Flow, in conduit or thru	50050-1-0	Effluent Gross				.103	MGD	MGD								N
KY0045390	Airview WWTF	Hardin	001-1	08/31/2015	Flow, in conduit or thru	50050-1-0	Effluent Gross		.01826	MGD			MGD								N
KY0045390	Airview WWTF	Hardin	001-1	08/31/2015	Flow, in conduit or thru	50050-1-0	Effluent Gross				.02722	MGD	MGD								N
KY0045390	Airview WWTF	Hardin	001-1	07/31/2015	Flow, in conduit or thru treatment plant	50050-1-0	Effluent Gross		NODI **8**		NODI **8**		MGD								N
KY0045390	Airview WWTF	Hardin	001-1	06/30/2015	Flow, in conduit or thru	50050-1-0	Effluent Gross		.02548	MGD			MGD								N
KY0045390	Airview WWTF	Hardin	001-1	06/30/2015	Flow, in conduit or thru	50050-1-0	Effluent Gross				.02791	MGD	MGD								N
KY0045390	Airview WWTF	Hardin	001-1	05/31/2015	Flow, in conduit or thru	50050-1-0	Effluent Gross		.0191	MGD			MGD								N
KY0045390	Airview WWTF	Hardin	001-1	05/31/2015	Flow, in conduit or thru	50050-1-0	Effluent Gross				.025	MGD	MGD								N
KY0045390	Airview WWTF	Hardin	001-1	04/30/2015	Flow, in conduit or thru	50050-1-0	Effluent Gross		.02454	MGD			MGD								N
KY0045390	Airview WWTF	Hardin	001-1	04/30/2015	Flow, in conduit or thru	50050-1-0	Effluent Gross				.028	MGD	MGD								N
KY0045390	Airview WWTF	Hardin	001-1	03/31/2015	Flow, in conduit or thru	50050-1-0	Effluent Gross		.01742	MGD			MGD								N
KY0045390	Airview WWTF	Hardin	001-1	03/31/2015	Flow, in conduit or thru	50050-1-0	Effluent Gross				.028	MGD	MGD								N
KY0045390	Airview WWTF	Hardin	001-1	02/28/2015	Flow, in conduit or thru	50050-1-0	Effluent Gross		.026	MGD			MGD								N
KY0045390	Airview WWTF	Hardin	001-1	02/28/2015	Flow, in conduit or thru	50050-1-0	Effluent Gross				.027	MGD	MGD								N
KY0045390	Airview WWTF	Hardin	001-1	01/31/2015	Flow, in conduit or thru	50050-1-0	Effluent Gross		.0858	MGD			MGD								N
KY0045390	Airview WWTF	Hardin	001-1	01/31/2015	Flow, in conduit or thru	50050-1-0	Effluent Gross				.858	MGD	MGD								N
KY0045390	Airview WWTF	Hardin	001-1	12/31/2014	Flow, in conduit or thru	50050-1-0	Effluent Gross		.0234	MGD			MGD								N
KY0045390	Airview WWTF	Hardin	001-1	12/31/2014	Flow, in conduit or thru	50050-1-0	Effluent Gross				.029	MGD	MGD								N
KY0045390	Airview WWTF	Hardin	001-1	11/30/2014	Flow, in conduit or thru treatment plant	50050-1-0	Effluent Gross		NODI **E**		NODI **E**		MGD								N
KY0045390	Airview WWTF	Hardin	001-1	10/31/2014	Flow, in conduit or thru treatment plant	50050-1-0	Effluent Gross		NODI **E**		NODI **E**		MGD								N
KY0045390	Airview WWTF	Hardin	001-1	09/30/2019	Chlorine, total residual	50060-1-0	Effluent Gross	536								.07	mg/L			mg/L	Y
KY0045390	Airview WWTF	Hardin	001-1	09/30/2019	Chlorine, total residual	50060-1-0	Effluent Gross	268										.07	mg/L	mg/L	Y
KY0045390	Airview WWTF	Hardin	001-1	08/31/2019	Chlorine, total residual	50060-1-0	Effluent Gross													mg/L	N
KY0045390	Airview WWTF	Hardin	001-1	07/31/2019	Chlorine, total residual	50060-1-0	Effluent Gross													mg/L	N
KY0045390	Airview WWTF	Hardin	001-1	06/30/2019	Chlorine, total residual	50060-1-0	Effluent Gross													mg/L	N
KY0045390	Airview WWTF	Hardin	001-1	05/31/2019	Chlorine, total residual	50060-1-0	Effluent Gross													mg/L	N
KY0045390	Airview WWTF	Hardin	001-1	04/30/2019	Chlorine, total residual	50060-1-0	Effluent Gross													mg/L	N
KY0045390	Airview WWTF	Hardin	001-1	03/31/2019	Chlorine, total residual	50060-1-0	Effluent Gross	5173								< .58	mg/L			mg/L	Y
KY0045390	Airview WWTF	Hardin	001-1	03/31/2019	Chlorine, total residual	50060-1-0	Effluent Gross	11479										2.2	mg/L	mg/L	Y
KY0045390	Airview WWTF	Hardin	001-1	02/28/2019	Chlorine, total residual	50060-1-0	Effluent Gross	9900								1.1	mg/L			mg/L	Y
KY0045390	Airview WWTF	Hardin	001-1	02/28/2019	Chlorine, total residual	50060-1-0	Effluent Gross	11479										2.2	mg/L	mg/L	Y
KY0045390	Airview WWTF	Hardin	001-1	01/31/2019	Chlorine, total residual	50060-1-0	Effluent Gross	12082								1.34	mg/L			mg/L	Y
KY0045390	Airview WWTF	Hardin	001-1	01/31/2019	Chlorine, total residual	50060-1-0	Effluent Gross	11479										2.2	mg/L	mg/L	Y
KY0045390	Airview WWTF	Hardin	001-1	12/31/2018	Chlorine, total residual	50060-1-0	Effluent Gross													mg/L	N
KY0045390	Airview WWTF	Hardin	001-1	11/30/2018	Chlorine, total residual	50060-1-0	Effluent Gross	19536								2.16	mg/L			mg/L	Y
KY0045390	Airview WWTF	Hardin	001-1	11/30/2018	Chlorine, total residual	50060-1-0	Effluent Gross	11479										2.2	mg/L	mg/L	Y
KY0045390	Airview WWTF	Hardin	001-1	10/31/2018	Chlorine, total residual	50060-1-0	Effluent Gross	19900								2.2	mg/L			mg/L	Y
KY0045390	Airview WWTF	Hardin	001-1	10/31/2018	Chlorine, total residual	50060-1-0	Effluent Gross	11479										2.2	mg/L	mg/L	Y
KY0045390	Airview WWTF	Hardin	001-1	09/30/2018	Chlorine, total residual	50060-1-0	Effluent Gross	14991								1.66	mg/L			mg/L	Y
KY0045390	Airview WWTF	Hardin	001-1	09/30/2018	Chlorine, total residual	50060-1-0	Effluent Gross	28847										5.5	mg/L	mg/L	Y
KY0045390	Airview WWTF	Hardin	001-1	08/31/2018	Chlorine, total residual	50060-1-0	Effluent Gross	19082								2.11	mg/L			mg/L	Y
KY0045390	Airview WWTF	Hardin	001-1	08/31/2018	Chlorine, total residual	50060-1-0	Effluent Gross	11005										2.11	mg/L	mg/L	Y
KY0045390	Airview WWTF	Hardin	001-1	07/31/2018	Chlorine, total residual	50060-1-0	Effluent Gross	19900								2.2	mg/L			mg/L	Y
KY0045390	Airview WWTF	Hardin	001-1	07/31/2018	Chlorine, total residual	50060-1-0	Effluent Gross	11479										2.2	mg/L	mg/L	Y
KY0045390	Airview WWTF	Hardin	001-1	06/30/2018	Chlorine, total residual	50060-1-0	Effluent Gross	14900								1.65	mg/L			mg/L	Y
KY0045390	Airview WWTF	Hardin	001-1	06/30/2018	Chlorine, total residual	50060-1-0	Effluent Gross	11479										2.2	mg/L	mg/L	Y
KY0045390	Airview WWTF	Hardin	001-1	05/31/2018	Chlorine, total residual	50060-1-0	Effluent Gross	8427								.938	mg/L			mg/L	Y
KY0045390	Airview WWTF	Hardin	001-1	05/31/2018	Chlorine, total residual	50060-1-0	Effluent Gross	11479										2.2	mg/L	mg/L	Y
KY0045390	Airview WWTF	Hardin	001-1	04/30/2018	Chlorine, total residual	50060-1-0	Effluent Gross	5973								.668	mg/L			mg/L	Y
KY0045390	Airview WWTF	Hardin	001-1	04/30/2018	Chlorine, total residual	50060-1-0	Effluent Gross	11479										2.2	mg/L	mg/L	Y
KY0045390	Airview WWTF	Hardin	001-1	03/31/2018	Chlorine, total residual	50060-1-0	Effluent Gross	10536								1.17	mg/L			mg/L	Y
KY0045390	Airview WWTF	Hardin	001-1	03/31/2018	Chlorine, total residual	50060-1-0	Effluent Gross	11479										2.2	mg/L	mg/L	Y
KY0045390	Airview WWTF	Hardin	001-1	02/28/2018	Chlorine, total residual	50060-1-0	Effluent Gross									NODI B		NODI B		mg/L	N
KY0045390	Airview WWTF	Hardin	001-1	01/31/2018	Chlorine, total residual	50060-1-0	Effluent Gross	19900								2.2	mg/L			mg/L	Y
KY0045390	Airview WWTF	Hardin	001-1	01/31/2018	Chlorine, total residual	50060-1-0	Effluent Gross	11479										2.2	mg/L	mg/L	Y
KY0045390	Airview WWTF	Hardin	001-1	12/31/2017	Chlorine, total residual	50060-1-0	Effluent Gross	19673								2.175	mg/L			mg/L	Y
KY0045390	Airview WWTF	Hardin	001-1	12/31/2017	Chlorine, total residual	50060-1-0	Effluent Gross	11479										2.2	mg/L	mg/L	Y
KY0045390	Airview WWTF	Hardin	001-1	11/30/2017	Chlorine, total residual	50060-1-0	Effluent Gross	12900								1.43	mg/L			mg/L	Y
KY0045390	Airview WWTF	Hardin	001-1	11/30/2017	Chlorine, total residual	50060-1-0	Effluent Gross	11479										2.2	mg/L	mg/L	Y
KY0045390	Airview WWTF	Hardin	001-1	10/31/2017	Chlorine, total residual	50060-1-0	Effluent Gross	6105								< .6825	mg/L			mg/L	Y
KY0045390	Airview WWTF	Hardin	001-1	10/31/2017	Chlorine, total residual	50060-1-0	Effluent Gross	10426										2	mg/L	mg/L	Y
KY0045390	Airview WWTF	Hardin	001-1	09/30/2017	Chlorine, total residual	50060-1-0	Effluent Gross	286								< .0425	mg/L			mg/L	Y
KY0045390	Airview WWTF	Hardin	001-1	09/30/2017	Chlorine, total residual	50060-1-0	Effluent Gross	584										.13	mg/L	mg/L	Y
KY0045390	Airview WWTF	Hardin	001-1	08/31/2017	Chlorine, total residual	50060-1-0	Effluent Gross	3445								.39	mg/L			mg/L	Y
KY0045390	Airview WWTF	Hardin	001-1	08/31/2017	Chlorine, total residual	50060-1-0	Effluent Gross	9900										1.9	mg/L	mg/L	Y
KY0045390	Airview WWTF	Hardin	001-1	07/31/2017	Chlorine, total residual	50060-1-0	Effluent Gross	13264								< 1.47	mg/L			mg/L	Y
KY0045390	Airview WWTF	Hardin	001-1	07/31/2017	Chlorine, total residual	50060-1-0	Effluent Gross	11479										2.2	mg/L	mg/L	Y
KY0045390	Airview WWTF	Hardin	001-1	06/30/2017	Chlorine, total residual	50060-1-0	Effluent Gross	13605								1.5075	mg/L			mg/L	Y
KY0045390	Airview WWTF	Hardin	001-1	06/30/2017	Chlorine, total residual	50060-1-0	Effluent Gross	11479										2.2	mg/L	mg/L	Y
KY0045390	Airview WWTF	Hardin	001-1	05/31/2017	Chlorine, total residual	50060-1-0	Effluent Gross	8791								< .978	mg/L			mg/L	Y
KY0045390	Airview WWTF	Hardin	001-1	05/31/2017	Chlorine, total residual	50060-1-0	Effluent Gross	11163										2.14	mg/L	mg/L	Y
KY0045390	Airview WWTF	Hardin	001-1	04/30/2017	Chlorine, total residual	50060-1-0	Effluent Gross	9264								< 1.03	mg/L			mg/L	Y
KY0045390	Airview WWTF	Hardin	001-1	04/30/2017	Chlorine, total residual	50060-1-0	Effluent Gross	11479										2.2	mg/L	mg/L	Y
KY0045390	Airview WWTF	Hardin	001-1	03/31/2017	Chlorine, total residual	50060-1-0	Effluent Gross	7627								.85	mg/L			mg/L	Y
KY0045390	Airview WWTF	Hardin	001-1	03/31/2017	Chlorine, total residual	50060-1-0	Effluent Gross	6058										1.17	mg/L	mg/L	Y
KY0045390	Airview WWTF	Hardin	001-1	02/28/2017	Chlorine, total residual	50060-1-0	Effluent Gross	273								.041	mg/L			mg/L	Y
KY0045390	Airview WWTF	Hardin	001-1	02/28/2017	Chlorine, total residual	50060-1-0	Effluent Gross	10268										1.97	mg/L	mg/L	Y
KY0045390	Airview WWTF	Hardin	001-1	01/31/2017	Chlorine, total residual	50060-1-0	Effluent Gross	9155								1.018	mg/L			mg/L	Y
KY0045390	Airview WWTF	Hardin	001-1	01/31/2017	Chlorine, total residual	50060-1-0	Effluent Gross	11479										2.2	mg/L	mg/L	Y
KY0045390	Airview WWTF	Hardin	001-1	12/31/2016	Chlorine, total residual	50060-1-0	Effluent Gross	19900								2.2	mg/L			mg/L	Y
KY0045390	Airview WWTF	Hardin	001-1	12/31/2016	Chlorine, total residual	50060-1-0	Effluent Gross	11479										2.2	mg/L	mg/L	Y
KY0045390	Airview WWTF	Hardin	001-1	11/30/2016	Chlorine, total residual	50060-1-0	Effluent Gross	209								.034	mg/L			mg/L	Y
KY0045390	Airview WWTF	Hardin	001-1	11/30/2016	Chlorine, total residual	50060-1-0	Effluent Gross	479										.11	mg/L	mg/L	Y

KY0045390	Airview WWTF	Hardin	001-1	10/31/2016	Chlorine, total residual	50060-1-0	Effluent Gross	9445							1.05	mg/L			mg/L	Y
KY0045390	Airview WWTF	Hardin	001-1	10/31/2016	Chlorine, total residual	50060-1-0	Effluent Gross	11479									2.2	mg/L	mg/L	Y
KY0045390	Airview WWTF	Hardin	001-1	09/30/2016	Chlorine, total residual	50060-1-0	Effluent Gross	19241							2.1275	mg/L			mg/L	Y
KY0045390	Airview WWTF	Hardin	001-1	09/30/2016	Chlorine, total residual	50060-1-0	Effluent Gross	11479									2.2	mg/L	mg/L	Y
KY0045390	Airview WWTF	Hardin	001-1	08/31/2016	Chlorine, total residual	50060-1-0	Effluent Gross	11809							1.31	mg/L			mg/L	Y
KY0045390	Airview WWTF	Hardin	001-1	08/31/2016	Chlorine, total residual	50060-1-0	Effluent Gross	11479									2.2	mg/L	mg/L	Y
KY0045390	Airview WWTF	Hardin	001-1	07/31/2016	Chlorine, total residual	50060-1-0	Effluent Gross	798							< .0988	mg/L			mg/L	Y
KY0045390	Airview WWTF	Hardin	001-1	07/31/2016	Chlorine, total residual	50060-1-0	Effluent Gross	11479									2.2	mg/L	mg/L	Y
KY0045390	Airview WWTF	Hardin	001-1	06/30/2016	Chlorine, total residual	50060-1-0	Effluent Gross	11991							1.33	mg/L			mg/L	Y
KY0045390	Airview WWTF	Hardin	001-1	06/30/2016	Chlorine, total residual	50060-1-0	Effluent Gross	11479									2.2	mg/L	mg/L	Y
KY0045390	Airview WWTF	Hardin	001-1	05/31/2016	Chlorine, total residual	50060-1-0	Effluent Gross	14445							1.6	mg/L			mg/L	Y
KY0045390	Airview WWTF	Hardin	001-1	05/31/2016	Chlorine, total residual	50060-1-0	Effluent Gross	11479									2.2	mg/L	mg/L	Y
KY0045390	Airview WWTF	Hardin	001-1	04/30/2016	Chlorine, total residual	50060-1-0	Effluent Gross	3355							.38	mg/L			mg/L	Y
KY0045390	Airview WWTF	Hardin	001-1	04/30/2016	Chlorine, total residual	50060-1-0	Effluent Gross	7584									1.46	mg/L	mg/L	Y
KY0045390	Airview WWTF	Hardin	001-1	03/31/2016	Chlorine, total residual	50060-1-0	Effluent Gross	6973							< .778	mg/L			mg/L	Y
KY0045390	Airview WWTF	Hardin	001-1	03/31/2016	Chlorine, total residual	50060-1-0	Effluent Gross	11479									2.2	mg/L	mg/L	Y
KY0045390	Airview WWTF	Hardin	001-1	02/29/2016	Chlorine, total residual	50060-1-0	Effluent Gross	14900							1.65	mg/L			mg/L	Y
KY0045390	Airview WWTF	Hardin	001-1	02/29/2016	Chlorine, total residual	50060-1-0	Effluent Gross	11479									2.2	mg/L	mg/L	Y
KY0045390	Airview WWTF	Hardin	001-1	01/31/2016	Chlorine, total residual	50060-1-0	Effluent Gross	10173							1.13	mg/L			mg/L	Y
KY0045390	Airview WWTF	Hardin	001-1	01/31/2016	Chlorine, total residual	50060-1-0	Effluent Gross	11479									2.2	mg/L	mg/L	Y
KY0045390	Airview WWTF	Hardin	001-1	12/31/2015	Chlorine, total residual	50060-1-0	Effluent Gross	11573							1.284	mg/L			mg/L	Y
KY0045390	Airview WWTF	Hardin	001-1	12/31/2015	Chlorine, total residual	50060-1-0	Effluent Gross	9584									1.84	mg/L	mg/L	Y
KY0045390	Airview WWTF	Hardin	001-1	11/30/2015	Chlorine, total residual	50060-1-0	Effluent Gross	15673							1.735	mg/L			mg/L	Y
KY0045390	Airview WWTF	Hardin	001-1	11/30/2015	Chlorine, total residual	50060-1-0	Effluent Gross	11479									2.2	mg/L	mg/L	Y
KY0045390	Airview WWTF	Hardin	001-1	10/31/2015	Chlorine, total residual	50060-1-0	Effluent Gross	11627							1.29	mg/L			mg/L	Y
KY0045390	Airview WWTF	Hardin	001-1	10/31/2015	Chlorine, total residual	50060-1-0	Effluent Gross	11479									2.2	mg/L	mg/L	Y
KY0045390	Airview WWTF	Hardin	001-1	09/30/2015	Chlorine, total residual	50060-1-0	Effluent Gross	1445							.17	mg/L			mg/L	Y
KY0045390	Airview WWTF	Hardin	001-1	09/30/2015	Chlorine, total residual	50060-1-0	Effluent Gross	2795									.55	mg/L	mg/L	Y
KY0045390	Airview WWTF	Hardin	001-1	08/31/2015	Chlorine, total residual	50060-1-0	Effluent Gross	991							.12	mg/L			mg/L	Y
KY0045390	Airview WWTF	Hardin	001-1	08/31/2015	Chlorine, total residual	50060-1-0	Effluent Gross	2005									.4	mg/L	mg/L	Y
KY0045390	Airview WWTF	Hardin	001-1	07/31/2015	Chlorine, total residual	50060-1-0	Effluent Gross								NODI **8**		NODI **8**		mg/L	N
KY0045390	Airview WWTF	Hardin	001-1	06/30/2015	Chlorine, total residual	50060-1-0	Effluent Gross	2150							.2475	mg/L			mg/L	Y
KY0045390	Airview WWTF	Hardin	001-1	06/30/2015	Chlorine, total residual	50060-1-0	Effluent Gross	4479									.87	mg/L	mg/L	Y
KY0045390	Airview WWTF	Hardin	001-1	05/31/2015	Chlorine, total residual	50060-1-0	Effluent Gross	1482							.174	mg/L			mg/L	Y
KY0045390	Airview WWTF	Hardin	001-1	05/31/2015	Chlorine, total residual	50060-1-0	Effluent Gross	4163									.81	mg/L	mg/L	Y
KY0045390	Airview WWTF	Hardin	001-1	04/30/2015	Chlorine, total residual	50060-1-0	Effluent Gross								< .01	mg/L			mg/L	N
KY0045390	Airview WWTF	Hardin	001-1	04/30/2015	Chlorine, total residual	50060-1-0	Effluent Gross	5									.02	mg/L	mg/L	Y
KY0045390	Airview WWTF	Hardin	001-1	03/31/2015	Chlorine, total residual	50060-1-0	Effluent Gross	5991							.67	mg/L			mg/L	Y
KY0045390	Airview WWTF	Hardin	001-1	03/31/2015	Chlorine, total residual	50060-1-0	Effluent Gross	10216									1.96	mg/L	mg/L	Y
KY0045390	Airview WWTF	Hardin	001-1	02/28/2015	Chlorine, total residual	50060-1-0	Effluent Gross	19900							2.2	mg/L			mg/L	Y
KY0045390	Airview WWTF	Hardin	001-1	02/28/2015	Chlorine, total residual	50060-1-0	Effluent Gross	8663									1.665	mg/L	mg/L	Y
KY0045390	Airview WWTF	Hardin	001-1	01/31/2015	Chlorine, total residual	50060-1-0	Effluent Gross	18882							2.088	mg/L			mg/L	Y
KY0045390	Airview WWTF	Hardin	001-1	01/31/2015	Chlorine, total residual	50060-1-0	Effluent Gross	13058									2.5	mg/L	mg/L	Y
KY0045390	Airview WWTF	Hardin	001-1	12/31/2014	Chlorine, total residual	50060-1-0	Effluent Gross	2900							.33	mg/L			mg/L	Y
KY0045390	Airview WWTF	Hardin	001-1	12/31/2014	Chlorine, total residual	50060-1-0	Effluent Gross	4637									.9	mg/L	mg/L	Y
KY0045390	Airview WWTF	Hardin	001-1	11/30/2014	Chlorine, total residual	50060-1-0	Effluent Gross								NODI **E**		NODI **E**		mg/L	N
KY0045390	Airview WWTF	Hardin	001-1	10/31/2014	Chlorine, total residual	50060-1-0	Effluent Gross								NODI **E**		NODI **E**		mg/L	N
KY0045390	Airview WWTF	Hardin	001-1	09/30/2019	E. coli	51040-1-0	Effluent Gross	46054							60000	#/100mL			#/100mL	Y
KY0045390	Airview WWTF	Hardin	001-1	09/30/2019	E. coli	51040-1-0	Effluent Gross	24900									60000	#/100mL	#/100mL	Y
KY0045390	Airview WWTF	Hardin	001-1	08/31/2019	E. coli	51040-1-0	Effluent Gross												#/100mL	N
KY0045390	Airview WWTF	Hardin	001-1	07/31/2019	E. coli	51040-1-0	Effluent Gross												#/100mL	N
KY0045390	Airview WWTF	Hardin	001-1	06/30/2019	E. coli	51040-1-0	Effluent Gross												#/100mL	N
KY0045390	Airview WWTF	Hardin	001-1	05/31/2019	E. coli	51040-1-0	Effluent Gross												#/100mL	N
KY0045390	Airview WWTF	Hardin	001-1	04/30/2019	E. coli	51040-1-0	Effluent Gross												#/100mL	N
KY0045390	Airview WWTF	Hardin	001-1	03/31/2019	E. coli	51040-1-0	Effluent Gross	17268							22578	#/100mL			#/100mL	Y
KY0045390	Airview WWTF	Hardin	001-1	03/31/2019	E. coli	51040-1-0	Effluent Gross	24900									60000	#/100mL	#/100mL	Y
KY0045390	Airview WWTF	Hardin	001-1	02/28/2019	E. coli	51040-1-0	Effluent Gross	1855							2542	#/100mL			#/100mL	Y
KY0045390	Airview WWTF	Hardin	001-1	02/28/2019	E. coli	51040-1-0	Effluent Gross	24900									60000	#/100mL	#/100mL	Y
KY0045390	Airview WWTF	Hardin	001-1	01/31/2019	E. coli	51040-1-0	Effluent Gross	3183							4268	#/100mL			#/100mL	Y
KY0045390	Airview WWTF	Hardin	001-1	01/31/2019	E. coli	51040-1-0	Effluent Gross	24900									60000	#/100mL	#/100mL	Y
KY0045390	Airview WWTF	Hardin	001-1	12/31/2018	E. coli	51040-1-0	Effluent Gross												#/100mL	N
KY0045390	Airview WWTF	Hardin	001-1	11/30/2018	E. coli	51040-1-0	Effluent Gross	18927							24735	#/100mL			#/100mL	Y
KY0045390	Airview WWTF	Hardin	001-1	11/30/2018	E. coli	51040-1-0	Effluent Gross	24900									60000	#/100mL	#/100mL	Y
KY0045390	Airview WWTF	Hardin	001-1	10/31/2018	E. coli	51040-1-0	Effluent Gross								2	#/100mL			#/100mL	N
KY0045390	Airview WWTF	Hardin	001-1	10/31/2018	E. coli	51040-1-0	Effluent Gross										8	#/100mL	#/100mL	N
KY0045390	Airview WWTF	Hardin	001-1	09/30/2018	E. coli	51040-1-0	Effluent Gross	680							1014	#/100mL			#/100mL	Y
KY0045390	Airview WWTF	Hardin	001-1	09/30/2018	E. coli	51040-1-0	Effluent Gross	24900									60000	#/100mL	#/100mL	Y
KY0045390	Airview WWTF	Hardin	001-1	08/31/2018	E. coli	51040-1-0	Effluent Gross								91	#/100mL			#/100mL	N
KY0045390	Airview WWTF	Hardin	001-1	08/31/2018	E. coli	51040-1-0	Effluent Gross	24900									60000	#/100mL	#/100mL	Y
KY0045390	Airview WWTF	Hardin	001-1	07/31/2018	E. coli	51040-1-0	Effluent Gross								9	#/100mL			#/100mL	N
KY0045390	Airview WWTF	Hardin	001-1	07/31/2018	E. coli	51040-1-0	Effluent Gross										15	#/100mL	#/100mL	N
KY0045390	Airview WWTF	Hardin	001-1	06/30/2018	E. coli	51040-1-0	Effluent Gross	1727							2375	#/100mL			#/100mL	Y
KY0045390	Airview WWTF	Hardin	001-1	06/30/2018	E. coli	51040-1-0	Effluent Gross	24900									60000	#/100mL	#/100mL	Y
KY0045390	Airview WWTF	Hardin	001-1	05/31/2018	E. coli	51040-1-0	Effluent Gross	78							231	#/100mL			#/100mL	Y
KY0045390	Airview WWTF	Hardin	001-1	05/31/2018	E. coli	51040-1-0	Effluent Gross	24900									60000	#/100mL	#/100mL	Y
KY0045390	Airview WWTF	Hardin	001-1	04/30/2018	E. coli	51040-1-0	Effluent Gross	46054							60000	#/100mL			#/100mL	Y
KY0045390	Airview WWTF	Hardin	001-1	04/30/2018	E. coli	51040-1-0	Effluent Gross	24900									60000	#/100mL	#/100mL	Y
KY0045390	Airview WWTF	Hardin	001-1	03/31/2018	E. coli	51040-1-0	Effluent Gross								120	#/100mL			#/100mL	N
KY0045390	Airview WWTF	Hardin	001-1	03/31/2018	E. coli	51040-1-0	Effluent Gross	24900									60000	#/100mL	#/100mL	Y
KY0045390	Airview WWTF	Hardin	001-1	02/28/2018	E. coli	51040-1-0	Effluent Gross	46054							60000	#/100mL			#/100mL	Y
KY0045390	Airview WWTF	Hardin	001-1	02/28/2018	E. coli	51040-1-0	Effluent Gross	24900									60000	#/100mL	#/100mL	Y
KY0045390	Airview WWTF	Hardin	001-1	01/31/2018	E. coli	51040-1-0	Effluent Gross								3	#/100mL			#/100mL	N
KY0045390	Airview WWTF	Hardin	001-1	01/31/2018	E. coli	51040-1-0	Effluent Gross										14	#/100mL	#/100mL	N
KY0045390	Airview WWTF	Hardin	001-1	12/31/2017	E. coli	51040-1-0	Effluent Gross								4	#/100mL			#/100mL	N
KY0045390	Airview WWTF	Hardin	001-1	12/31/2017	E. coli	51040-1-0	Effluent Gross										17	#/100mL	#/100mL	N
KY0045390	Airview WWTF	Hardin	001-1	11/30/2017	E. coli	51040-1-0	Effluent Gross	464							733	#/100mL			#/100mL	Y
KY0045390	Airview WWTF	Hardin	001-1	11/30/2017	E. coli	51040-1-0	Effluent Gross	24900									60000	#/100mL	#/100mL	Y
KY0045390	Airview WWTF	Hardin	001-1	10/31/2017	E. coli	51040-1-0	Effluent Gross	1432							1992	#/100mL			#/100mL	Y
KY0045390	Airview WWTF	Hardin	001-1	10/31/2017	E. coli	51040-1-0	Effluent Gross	24900									60000	#/100mL	#/100mL	Y
KY0045390	Airview WWTF	Hardin	001-1	09/30/2017	E. coli	51040-1-0	Effluent Gross	46054							60000	#/100mL			#/100mL	Y
KY0045390	Airview WWTF	Hardin	001-1	09/30/2017	E. coli	51040-1-0	Effluent Gross	24900									60000	#/100mL	#/100mL	Y
KY0045390	Airview WWTF	Hardin	001-1	08/31/2017	E. coli	51040-1-0	Effluent Gross	46054							60000	#/100mL			#/100mL	Y
KY0045390	Airview WWTF	Hardin	001-1	08/31/2017	E. coli	51040-1-0	Effluent Gross	24900									60000	#/100mL	#/100mL	Y
KY0045390	Airview WWTF	Hardin	001-1	07/31/2017	E. coli	51040-1-0	Effluent Gross	193							381	#/100mL			#/100mL	Y
KY0045390	Airview WWTF	Hardin	001-1	07/31/2017	E. coli	51040-1-0	Effluent Gross	24900									60000	#/100mL	#/100mL	Y
KY0045390	Airview WWTF	Hardin	001-1	06/30/2017	E. coli	51040-1-0	Effluent Gross								32	#/100mL			#/100mL	N
KY0045390	Airview WWTF	Hardin	001-1	06/30/2017	E. coli	51040-1-0	Effluent Gross	24900									60000	#/100mL	#/100mL	Y
KY0045390	Airview WWTF	Hardin	001-1	05/31/2017	E. coli	51040-1-0	Effluent Gross	1690							2327	#/100mL			#/100mL	Y
KY0045390	Airview WWTF	Hardin	001-1	05/31/2017	E. coli	51040-1-0	Effluent Gross	24900									60000	#/100mL	#/100mL	Y
KY0045390	Airview WWTF	Hardin	001-1	04/30/2017	E. coli	51040-1-0	Effluent Gross	965							1385	#/100mL			#/100mL	Y
KY0045390	Airview WWTF	Hardin	001-1	04/30/2017	E. coli	51040-1-0	Effluent Gross	24900									60000	#/100mL	#/100mL	Y
KY0045390	Airview WWTF	Hardin	001-1	03/31/2017	E. coli	51040-1-0	Effluent Gross	46054							60000	#/100mL			#/100mL	Y
KY0045390	Airview WWTF	Hardin	001-1	03/31/2017	E. coli	51040-1-0	Effluent Gross	2									245	#/100mL	#/100mL	Y
KY0045390	Airview WWTF	Hardin	001-1	02/28/2017	E. coli	51040-1-0	Effluent Gross	6546							8640	#/100mL			#/100mL	Y
KY0045390	Airview WWTF	Hardin	001-1	02/28/2017	E. coli	51040-1-0	Effluent Gross	24900									60000	#/100mL	#/100mL	Y
KY0045390	Airview WWTF	Hardin	001-1	01/31/2017	E. coli	51040-1-0	Effluent Gross	1968							2689	#/100mL			#/100mL	Y
KY0045390	Airview WWTF	Hardin	001-1	01/31/2017	E. coli	51040-1-0	Effluent Gross	24900									60000	#/100mL	#/100mL	Y
KY0045390	Airview WWTF	Hardin	001-1	12/31/2016	E. coli	51040-1-0	Effluent Gross								10	#/100mL			#/100mL	N
KY0045390	Airview WWTF	Hardin	001-1	12/31/2016	E. coli	51040-1-0	Effluent Gross	908									2420	#/100mL	#/100mL	Y
KY0045390	Airview WWTF	Hardin	001-1	11/30/2016	E. coli	51040-1-0	Effluent Gross	29							168	#/100mL			#/100mL	Y
KY0045390	Airview WWTF	Hardin	001-1	11/30/2016	E. coli	51040-1-0	Effluent Gross	24900									60000	#/100mL	#/100mL	Y
KY0045390	Airview WWTF	Hardin	001-1	10/31/2016	E. coli	51040-1-0	Effluent Gross	62							211	#/100mL			#/100mL	Y
KY0045390	Airview WWTF	Hardin	001-1	10/31/2016	E. coli	51040-1-0	Effluent Gross	24900									60000	#/100mL	#/100mL	Y
KY0045390	Airview WWTF	Hardin	001-1	09/30/2016	E. coli	51040-1-0	Effluent Gross	88							245	#/100mL			#/100mL	Y

KY0045390	Airview WWTF	Hardin	001-1	09/30/2016	E. coli	51040-1-0	Effluent Gross	24900										60000	#/100mL	#/100mL	Y
KY0045390	Airview WWTF	Hardin	001-1	08/31/2016	E. coli	51040-1-0	Effluent Gross	50								195	#/100mL			#/100mL	Y
KY0045390	Airview WWTF	Hardin	001-1	08/31/2016	E. coli	51040-1-0	Effluent Gross	24900										60000	#/100mL	#/100mL	Y
KY0045390	Airview WWTF	Hardin	001-1	07/31/2016	E. coli	51040-1-0	Effluent Gross	2849								3834	#/100mL			#/100mL	Y
KY0045390	Airview WWTF	Hardin	001-1	07/31/2016	E. coli	51040-1-0	Effluent Gross	24900										60000	#/100mL	#/100mL	Y
KY0045390	Airview WWTF	Hardin	001-1	06/30/2016	E. coli	51040-1-0	Effluent Gross	665								995	#/100mL			#/100mL	Y
KY0045390	Airview WWTF	Hardin	001-1	06/30/2016	E. coli	51040-1-0	Effluent Gross	24900										60000	#/100mL	#/100mL	Y
KY0045390	Airview WWTF	Hardin	001-1	05/31/2016	E. coli	51040-1-0	Effluent Gross	46054								60000	#/100mL			#/100mL	Y
KY0045390	Airview WWTF	Hardin	001-1	05/31/2016	E. coli	51040-1-0	Effluent Gross	24900										60000	#/100mL	#/100mL	Y
KY0045390	Airview WWTF	Hardin	001-1	04/30/2016	E. coli	51040-1-0	Effluent Gross	46054								60000	#/100mL			#/100mL	Y
KY0045390	Airview WWTF	Hardin	001-1	04/30/2016	E. coli	51040-1-0	Effluent Gross	24900										60000	#/100mL	#/100mL	Y
KY0045390	Airview WWTF	Hardin	001-1	03/31/2016	E. coli	51040-1-0	Effluent Gross	259								467	#/100mL			#/100mL	Y
KY0045390	Airview WWTF	Hardin	001-1	03/31/2016	E. coli	51040-1-0	Effluent Gross	24900										60000	#/100mL	#/100mL	Y
KY0045390	Airview WWTF	Hardin	001-1	02/29/2016	E. coli	51040-1-0	Effluent Gross	195								384	#/100mL			#/100mL	Y
KY0045390	Airview WWTF	Hardin	001-1	02/29/2016	E. coli	51040-1-0	Effluent Gross	24900										60000	#/100mL	#/100mL	Y
KY0045390	Airview WWTF	Hardin	001-1	01/31/2016	E. coli	51040-1-0	Effluent Gross	142								314	#/100mL			#/100mL	Y
KY0045390	Airview WWTF	Hardin	001-1	01/31/2016	E. coli	51040-1-0	Effluent Gross	24900										60000	#/100mL	#/100mL	Y
KY0045390	Airview WWTF	Hardin	001-1	12/31/2015	E. coli	51040-1-0	Effluent Gross	2015								2749	#/100mL			#/100mL	Y
KY0045390	Airview WWTF	Hardin	001-1	12/31/2015	E. coli	51040-1-0	Effluent Gross	24900										60000	#/100mL	#/100mL	Y
KY0045390	Airview WWTF	Hardin	001-1	11/30/2015	E. coli	51040-1-0	Effluent Gross	878								1272	#/100mL			#/100mL	Y
KY0045390	Airview WWTF	Hardin	001-1	11/30/2015	E. coli	51040-1-0	Effluent Gross	24900										60000	#/100mL	#/100mL	Y
KY0045390	Airview WWTF	Hardin	001-1	10/31/2015	E. coli	51040-1-0	Effluent Gross	1375								1917	#/100mL			#/100mL	Y
KY0045390	Airview WWTF	Hardin	001-1	10/31/2015	E. coli	51040-1-0	Effluent Gross	24900										60000	#/100mL	#/100mL	Y
KY0045390	Airview WWTF	Hardin	001-1	09/30/2015	E. coli	51040-1-0	Effluent Gross	3788								5055	#/100mL			#/100mL	Y
KY0045390	Airview WWTF	Hardin	001-1	09/30/2015	E. coli	51040-1-0	Effluent Gross	24900										60000	#/100mL	#/100mL	Y
KY0045390	Airview WWTF	Hardin	001-1	08/31/2015	E. coli	51040-1-0	Effluent Gross	46054								60000	#/100mL			#/100mL	Y
KY0045390	Airview WWTF	Hardin	001-1	08/31/2015	E. coli	51040-1-0	Effluent Gross	24900										60000	#/100mL	#/100mL	Y
KY0045390	Airview WWTF	Hardin	001-1	07/31/2015	E. coli	51040-1-0	Effluent Gross									NODI **8**		NODI **8**		#/100mL	N
KY0045390	Airview WWTF	Hardin	001-1	06/30/2015	E. coli	51040-1-0	Effluent Gross	17268								22578	#/100mL			#/100mL	Y
KY0045390	Airview WWTF	Hardin	001-1	06/30/2015	E. coli	51040-1-0	Effluent Gross	24900										60000	#/100mL	#/100mL	Y
KY0045390	Airview WWTF	Hardin	001-1	05/31/2015	E. coli	51040-1-0	Effluent Gross	1762								2420	#/100mL			#/100mL	Y
KY0045390	Airview WWTF	Hardin	001-1	05/31/2015	E. coli	51040-1-0	Effluent Gross	908										2420	#/100mL	#/100mL	Y
KY0045390	Airview WWTF	Hardin	001-1	04/30/2015	E. coli	51040-1-0	Effluent Gross	46054								60000	#/100mL			#/100mL	Y
KY0045390	Airview WWTF	Hardin	001-1	04/30/2015	E. coli	51040-1-0	Effluent Gross	24900										60000	#/100mL	#/100mL	Y
KY0045390	Airview WWTF	Hardin	001-1	03/31/2015	E. coli	51040-1-0	Effluent Gross	46054								60000	#/100mL			#/100mL	Y
KY0045390	Airview WWTF	Hardin	001-1	03/31/2015	E. coli	51040-1-0	Effluent Gross	24900										60000	#/100mL	#/100mL	Y
KY0045390	Airview WWTF	Hardin	001-1	02/28/2015	E. coli	51040-1-0	Effluent Gross	7173								9455	#/100mL			#/100mL	Y
KY0045390	Airview WWTF	Hardin	001-1	02/28/2015	E. coli	51040-1-0	Effluent Gross	24900										60000	#/100mL	#/100mL	Y
KY0045390	Airview WWTF	Hardin	001-1	01/31/2015	E. coli	51040-1-0	Effluent Gross									103	#/100mL			#/100mL	N
KY0045390	Airview WWTF	Hardin	001-1	01/31/2015	E. coli	51040-1-0	Effluent Gross	908										2420	#/100mL	#/100mL	Y
KY0045390	Airview WWTF	Hardin	001-1	12/31/2014	E. coli	51040-1-0	Effluent Gross	1762								2420	#/100mL			#/100mL	Y
KY0045390	Airview WWTF	Hardin	001-1	12/31/2014	E. coli	51040-1-0	Effluent Gross	908										2420	#/100mL	#/100mL	Y
KY0045390	Airview WWTF	Hardin	001-1	11/30/2014	E. coli	51040-1-0	Effluent Gross									NODI **E**		NODI **E**		#/100mL	N
KY0045390	Airview WWTF	Hardin	001-1	10/31/2014	E. coli	51040-1-0	Effluent Gross									NODI **E**		NODI **E**		#/100mL	N
KY0045390	Airview WWTF	Hardin	001-1	09/30/2019	BOD, carbonaceous [5 day,	80082-1-0	Effluent Gross		7.389	lb/d			lb/d								N
KY0045390	Airview WWTF	Hardin	001-1	09/30/2019	BOD, carbonaceous [5 day,	80082-1-0	Effluent Gross				7.389	lb/d	lb/d								N
KY0045390	Airview WWTF	Hardin	001-1	09/30/2019	BOD, carbonaceous [5 day,	80082-1-0	Effluent Gross									18	mg/L			mg/L	N
KY0045390	Airview WWTF	Hardin	001-1	09/30/2019	BOD, carbonaceous [5 day,	80082-1-0	Effluent Gross											18	mg/L	mg/L	N
KY0045390	Airview WWTF	Hardin	001-1	08/31/2019	BOD, carbonaceous [5 day,	80082-1-0	Effluent Gross						lb/d								N
KY0045390	Airview WWTF	Hardin	001-1	08/31/2019	BOD, carbonaceous [5 day,	80082-1-0	Effluent Gross													mg/L	N
KY0045390	Airview WWTF	Hardin	001-1	07/31/2019	BOD, carbonaceous [5 day,	80082-1-0	Effluent Gross						lb/d								N
KY0045390	Airview WWTF	Hardin	001-1	07/31/2019	BOD, carbonaceous [5 day,	80082-1-0	Effluent Gross													mg/L	N
KY0045390	Airview WWTF	Hardin	001-1	06/30/2019	BOD, carbonaceous [5 day,	80082-1-0	Effluent Gross						lb/d								N
KY0045390	Airview WWTF	Hardin	001-1	06/30/2019	BOD, carbonaceous [5 day,	80082-1-0	Effluent Gross													mg/L	N
KY0045390	Airview WWTF	Hardin	001-1	05/31/2019	BOD, carbonaceous [5 day,	80082-1-0	Effluent Gross						lb/d								N
KY0045390	Airview WWTF	Hardin	001-1	05/31/2019	BOD, carbonaceous [5 day,	80082-1-0	Effluent Gross													mg/L	N
KY0045390	Airview WWTF	Hardin	001-1	04/30/2019	BOD, carbonaceous [5 day,	80082-1-0	Effluent Gross						lb/d								N
KY0045390	Airview WWTF	Hardin	001-1	04/30/2019	BOD, carbonaceous [5 day,	80082-1-0	Effluent Gross													mg/L	N
KY0045390	Airview WWTF	Hardin	001-1	03/31/2019	BOD, carbonaceous [5 day,	80082-1-0	Effluent Gross	22	11	lb/d		21	lb/d	lb/d							Y
KY0045390	Airview WWTF	Hardin	001-1	03/31/2019	BOD, carbonaceous [5 day,	80082-1-0	Effluent Gross	276								94	mg/L			mg/L	Y
KY0045390	Airview WWTF	Hardin	001-1	03/31/2019	BOD, carbonaceous [5 day,	80082-1-0	Effluent Gross	353										170	mg/L	mg/L	Y
KY0045390	Airview WWTF	Hardin	001-1	02/28/2019	BOD, carbonaceous [5 day,	80082-1-0	Effluent Gross		< 8	lb/d			lb/d								N
KY0045390	Airview WWTF	Hardin	001-1	02/28/2019	BOD, carbonaceous [5 day,	80082-1-0	Effluent Gross				16	lb/d	lb/d								N
KY0045390	Airview WWTF	Hardin	001-1	02/28/2019	BOD, carbonaceous [5 day,	80082-1-0	Effluent Gross	28								< 32	mg/L			mg/L	Y
KY0045390	Airview WWTF	Hardin	001-1	02/28/2019	BOD, carbonaceous [5 day,	80082-1-0	Effluent Gross	108										78	mg/L	mg/L	Y
KY0045390	Airview WWTF	Hardin	001-1	01/31/2019	BOD, carbonaceous [5 day,	80082-1-0	Effluent Gross		< 4	lb/d			lb/d								N
KY0045390	Airview WWTF	Hardin	001-1	01/31/2019	BOD, carbonaceous [5 day,	80082-1-0	Effluent Gross				9	lb/d	lb/d								N
KY0045390	Airview WWTF	Hardin	001-1	01/31/2019	BOD, carbonaceous [5 day,	80082-1-0	Effluent Gross									< 17	mg/L			mg/L	N
KY0045390	Airview WWTF	Hardin	001-1	01/31/2019	BOD, carbonaceous [5 day,	80082-1-0	Effluent Gross	1										38	mg/L	mg/L	Y
KY0045390	Airview WWTF	Hardin	001-1	12/31/2018	BOD, carbonaceous [5 day,	80082-1-0	Effluent Gross						lb/d								N
KY0045390	Airview WWTF	Hardin	001-1	12/31/2018	BOD, carbonaceous [5 day,	80082-1-0	Effluent Gross													mg/L	N
KY0045390	Airview WWTF	Hardin	001-1	11/30/2018	BOD, carbonaceous [5 day,	80082-1-0	Effluent Gross		10	lb/d			lb/d								N
KY0045390	Airview WWTF	Hardin	001-1	11/30/2018	BOD, carbonaceous [5 day,	80082-1-0	Effluent Gross	51			26	lb/d	lb/d								Y
KY0045390	Airview WWTF	Hardin	001-1	11/30/2018	BOD, carbonaceous [5 day,	80082-1-0	Effluent Gross	84								46	mg/L			mg/L	Y
KY0045390	Airview WWTF	Hardin	001-1	11/30/2018	BOD, carbonaceous [5 day,	80082-1-0	Effluent Gross	193										110	mg/L	mg/L	Y
KY0045390	Airview WWTF	Hardin	001-1	10/31/2018	BOD, carbonaceous [5 day,	80082-1-0	Effluent Gross		2	lb/d			lb/d								N
KY0045390	Airview WWTF	Hardin	001-1	10/31/2018	BOD, carbonaceous [5 day,	80082-1-0	Effluent Gross				4	lb/d	lb/d								N
KY0045390	Airview WWTF	Hardin	001-1	10/31/2018	BOD, carbonaceous [5 day,	80082-1-0	Effluent Gross									7	mg/L			mg/L	N
KY0045390	Airview WWTF	Hardin	001-1	10/31/2018	BOD, carbonaceous [5 day,	80082-1-0	Effluent Gross											9	mg/L	mg/L	N
KY0045390	Airview WWTF	Hardin	001-1	09/30/2018	BOD, carbonaceous [5 day,	80082-1-0	Effluent Gross		9	lb/d			lb/d								N
KY0045390	Airview WWTF	Hardin	001-1	09/30/2018	BOD, carbonaceous [5 day,	80082-1-0	Effluent Gross	51			26	lb/d	lb/d								Y
KY0045390	Airview WWTF	Hardin	001-1	09/30/2018	BOD, carbonaceous [5 day,	80082-1-0	Effluent Gross	52								38	mg/L			mg/L	Y
KY0045390	Airview WWTF	Hardin	001-1	09/30/2018	BOD, carbonaceous [5 day,	80082-1-0	Effluent Gross	156										96	mg/L	mg/L	Y
KY0045390	Airview WWTF	Hardin	001-1	08/31/2018	BOD, carbonaceous [5 day,	80082-1-0	Effluent Gross		6	lb/d			lb/d								N
KY0045390	Airview WWTF	Hardin	001-1	08/31/2018	BOD, carbonaceous [5 day,	80082-1-0	Effluent Gross				9	lb/d	lb/d								N
KY0045390	Airview WWTF	Hardin	001-1	08/31/2018	BOD, carbonaceous [5 day,	80082-1-0	Effluent Gross	16								29	mg/L			mg/L	Y
KY0045390	Airview WWTF	Hardin	001-1	08/31/2018	BOD, carbonaceous [5 day,	80082-1-0	Effluent Gross	71										64	mg/L	mg/L	Y
KY0045390	Airview WWTF	Hardin	001-1	07/31/2018	BOD, carbonaceous [5 day,	80082-1-0	Effluent Gross		< 8	lb/d			lb/d								N
KY0045390	Airview WWTF	Hardin	001-1	07/31/2018	BOD, carbonaceous [5 day,	80082-1-0	Effluent Gross	62			28	lb/d	lb/d								Y
KY0045390	Airview WWTF	Hardin	001-1	07/31/2018	BOD, carbonaceous [5 day,	80082-1-0	Effluent Gross	60								< 40	mg/L			mg/L	Y
KY0045390	Airview WWTF	Hardin	001-1	07/31/2018	BOD, carbonaceous [5 day,	80082-1-0	Effluent Gross	273										140	mg/L	mg/L	Y
KY0045390	Airview WWTF	Hardin	001-1	06/30/2018	BOD, carbonaceous [5 day,	80082-1-0	Effluent Gross		9	lb/d			lb/d								N
KY0045390	Airview WWTF	Hardin	001-1	06/30/2018	BOD, carbonaceous [5 day,	80082-1-0	Effluent Gross	51			26	lb/d	lb/d								Y
KY0045390	Airview WWTF	Hardin	001-1	06/30/2018	BOD, carbonaceous [5 day,	80082-1-0	Effluent Gross									16	mg/L			mg/L	N
KY0045390	Airview WWTF	Hardin	001-1	06/30/2018	BOD, carbonaceous [5 day,	80082-1-0	Effluent Gross	7										40	mg/L	mg/L	Y
KY0045390	Airview WWTF	Hardin	001-1	05/31/2018	BOD, carbonaceous [5 day,	80082-1-0	Effluent Gross		< 4	lb/d			lb/d								N
KY0045390	Airview WWTF	Hardin	001-1	05/31/2018	BOD, carbonaceous [5 day,	80082-1-0	Effluent Gross				10	lb/d	lb/d								N
KY0045390	Airview WWTF	Hardin	001-1	05/31/2018	BOD, carbonaceous [5 day,	80082-1-0	Effluent Gross									16	mg/L			mg/L	N
KY0045390	Airview WWTF	Hardin	001-1	05/31/2018	BOD, carbonaceous [5 day,	80082-1-0	Effluent Gross	23										46	mg/L	mg/L	Y
KY0045390	Airview WWTF	Hardin	001-1	04/30/2018	BOD, carbonaceous [5 day,	80082-1-0	Effluent Gross		7	lb/d			lb/d								N
KY0045390	Airview WWTF	Hardin	001-1	04/30/2018	BOD, carbonaceous [5 day,	80082-1-0	Effluent Gross	4			18	lb/d	lb/d								Y
KY0045390	Airview WWTF	Hardin	001-1	04/30/2018	BOD, carbonaceous [5 day,	80082-1-0	Effluent Gross	36								34	mg/L			mg/L	Y
KY0045390	Airview WWTF	Hardin	001-1	04/30/2018	BOD, carbonaceous [5 day,	80082-1-0	Effluent Gross	143										91	mg/L	mg/L	Y
KY0045390	Airview WWTF	Hardin	001-1	03/31/2018	BOD, carbonaceous [5 day,	80082-1-0	Effluent Gross		< 5	lb/d			lb/d								N
KY0045390	Airview WWTF	Hardin	001-1	03/31/2018	BOD, carbonaceous [5 day,	80082-1-0	Effluent Gross				8	lb/d	lb/d								N
KY0045390	Airview WWTF	Hardin	001-1	03/31/2018	BOD, carbonaceous [5 day,	80082-1-0	Effluent Gross									< 20	mg/L			mg/L	N
KY0045390	Airview WWTF	Hardin	001-1	03/31/2018	BOD, carbonaceous [5 day,	80082-1-0	Effluent Gross											36	mg/L	mg/L	N
KY0045390	Airview WWTF	Hardin	001-1	02/28/2018	BOD, carbonaceous [5 day,	80082-1-0	Effluent Gross	48	< 17	lb/d			lb/d								Y
KY0045390	Airview WWTF	Hardin	001-1	02/28/2018	BOD, carbonaceous [5 day,	80082-1-0	Effluent Gross	132			40	lb/d	lb/d								Y
KY0045390	Airview WWTF	Hardin	001-1	02/28/2018	BOD, carbonaceous [5 day,	80082-1-0	Effluent Gross	224								< 81	mg/L			mg/L	Y
KY0045390	Airview WWTF	Hardin	001-1	02/28/2018	BOD, carbonaceous [5 day,	80082-1-0	Effluent Gross	433										200	mg/L	mg/L	Y
KY0045390	Airview WWTF	Hardin	001-1	01/31/2018	BOD, carbonaceous [5 day,	80082-1-0	Effluent Gross	83	< 21	lb/d			lb/d								Y
KY0045390	Airview WWTF	Hardin	001-1	01/31/2018	BOD, carbonaceous [5 day,	80082-1-0	Effluent Gross	317			72	lb/d	lb/d								Y

KY0045390	Airview WWTF	Hardin	001-1	01/31/2018	BOD, carbonaceous [5 day,	80082-1-0	Effluent Gross									< 17	mg/L			mg/L	N
KY0045390	Airview WWTF	Hardin	001-1	01/31/2018	BOD, carbonaceous [5 day,	80082-1-0	Effluent Gross											35	mg/L	mg/L	N
KY0045390	Airview WWTF	Hardin	001-1	12/31/2017	BOD, carbonaceous [5 day,	80082-1-0	Effluent Gross		< 3	lb/d			lb/d								N
KY0045390	Airview WWTF	Hardin	001-1	12/31/2017	BOD, carbonaceous [5 day,	80082-1-0	Effluent Gross				3	lb/d	lb/d								N
KY0045390	Airview WWTF	Hardin	001-1	12/31/2017	BOD, carbonaceous [5 day,	80082-1-0	Effluent Gross									< 11	mg/L			mg/L	N
KY0045390	Airview WWTF	Hardin	001-1	12/31/2017	BOD, carbonaceous [5 day,	80082-1-0	Effluent Gross											16	mg/L	mg/L	N
KY0045390	Airview WWTF	Hardin	001-1	11/30/2017	BOD, carbonaceous [5 day,	80082-1-0	Effluent Gross		< 6	lb/d			lb/d								N
KY0045390	Airview WWTF	Hardin	001-1	11/30/2017	BOD, carbonaceous [5 day,	80082-1-0	Effluent Gross				16	lb/d	lb/d								N
KY0045390	Airview WWTF	Hardin	001-1	11/30/2017	BOD, carbonaceous [5 day,	80082-1-0	Effluent Gross	24								< 31	mg/L			mg/L	Y
KY0045390	Airview WWTF	Hardin	001-1	11/30/2017	BOD, carbonaceous [5 day,	80082-1-0	Effluent Gross	105										77	mg/L	mg/L	Y
KY0045390	Airview WWTF	Hardin	001-1	10/31/2017	BOD, carbonaceous [5 day,	80082-1-0	Effluent Gross		8	lb/d			lb/d								N
KY0045390	Airview WWTF	Hardin	001-1	10/31/2017	BOD, carbonaceous [5 day,	80082-1-0	Effluent Gross				15	lb/d	lb/d								N
KY0045390	Airview WWTF	Hardin	001-1	10/31/2017	BOD, carbonaceous [5 day,	80082-1-0	Effluent Gross	48								37	mg/L			mg/L	Y
KY0045390	Airview WWTF	Hardin	001-1	10/31/2017	BOD, carbonaceous [5 day,	80082-1-0	Effluent Gross	89										71	mg/L	mg/L	Y
KY0045390	Airview WWTF	Hardin	001-1	09/30/2017	BOD, carbonaceous [5 day,	80082-1-0	Effluent Gross		< 8	lb/d			lb/d								N
KY0045390	Airview WWTF	Hardin	001-1	09/30/2017	BOD, carbonaceous [5 day,	80082-1-0	Effluent Gross	10			19	lb/d	lb/d								Y
KY0045390	Airview WWTF	Hardin	001-1	09/30/2017	BOD, carbonaceous [5 day,	80082-1-0	Effluent Gross	32								< 33	mg/L			mg/L	Y
KY0045390	Airview WWTF	Hardin	001-1	09/30/2017	BOD, carbonaceous [5 day,	80082-1-0	Effluent Gross	76										66	mg/L	mg/L	Y
KY0045390	Airview WWTF	Hardin	001-1	08/31/2017	BOD, carbonaceous [5 day,	80082-1-0	Effluent Gross		< 1	lb/d			lb/d								N
KY0045390	Airview WWTF	Hardin	001-1	08/31/2017	BOD, carbonaceous [5 day,	80082-1-0	Effluent Gross				< 1	lb/d	lb/d								N
KY0045390	Airview WWTF	Hardin	001-1	08/31/2017	BOD, carbonaceous [5 day,	80082-1-0	Effluent Gross									< 6	mg/L			mg/L	N
KY0045390	Airview WWTF	Hardin	001-1	08/31/2017	BOD, carbonaceous [5 day,	80082-1-0	Effluent Gross											8	mg/L	mg/L	N
KY0045390	Airview WWTF	Hardin	001-1	07/31/2017	BOD, carbonaceous [5 day,	80082-1-0	Effluent Gross		6	lb/d			lb/d								N
KY0045390	Airview WWTF	Hardin	001-1	07/31/2017	BOD, carbonaceous [5 day,	80082-1-0	Effluent Gross				14	lb/d	lb/d								N
KY0045390	Airview WWTF	Hardin	001-1	07/31/2017	BOD, carbonaceous [5 day,	80082-1-0	Effluent Gross	20								30	mg/L			mg/L	Y
KY0045390	Airview WWTF	Hardin	001-1	07/31/2017	BOD, carbonaceous [5 day,	80082-1-0	Effluent Gross	71										64	mg/L	mg/L	Y
KY0045390	Airview WWTF	Hardin	001-1	06/30/2017	BOD, carbonaceous [5 day,	80082-1-0	Effluent Gross		< 4	lb/d			lb/d								N
KY0045390	Airview WWTF	Hardin	001-1	06/30/2017	BOD, carbonaceous [5 day,	80082-1-0	Effluent Gross				< 4	lb/d	lb/d								N
KY0045390	Airview WWTF	Hardin	001-1	06/30/2017	BOD, carbonaceous [5 day,	80082-1-0	Effluent Gross									< 16	mg/L			mg/L	N
KY0045390	Airview WWTF	Hardin	001-1	06/30/2017	BOD, carbonaceous [5 day,	80082-1-0	Effluent Gross	12										42	mg/L	mg/L	Y
KY0045390	Airview WWTF	Hardin	001-1	05/31/2017	BOD, carbonaceous [5 day,	80082-1-0	Effluent Gross		< 6	lb/d			lb/d								N
KY0045390	Airview WWTF	Hardin	001-1	05/31/2017	BOD, carbonaceous [5 day,	80082-1-0	Effluent Gross	4			18	lb/d	lb/d								Y
KY0045390	Airview WWTF	Hardin	001-1	05/31/2017	BOD, carbonaceous [5 day,	80082-1-0	Effluent Gross	4								< 26	mg/L			mg/L	Y
KY0045390	Airview WWTF	Hardin	001-1	05/31/2017	BOD, carbonaceous [5 day,	80082-1-0	Effluent Gross	100										75	mg/L	mg/L	Y
KY0045390	Airview WWTF	Hardin	001-1	04/30/2017	BOD, carbonaceous [5 day,	80082-1-0	Effluent Gross		3	lb/d			lb/d								N
KY0045390	Airview WWTF	Hardin	001-1	04/30/2017	BOD, carbonaceous [5 day,	80082-1-0	Effluent Gross				5	lb/d	lb/d								N
KY0045390	Airview WWTF	Hardin	001-1	04/30/2017	BOD, carbonaceous [5 day,	80082-1-0	Effluent Gross									< 12	mg/L			mg/L	N
KY0045390	Airview WWTF	Hardin	001-1	04/30/2017	BOD, carbonaceous [5 day,	80082-1-0	Effluent Gross											16	mg/L	mg/L	N
KY0045390	Airview WWTF	Hardin	001-1	03/31/2017	BOD, carbonaceous [5 day,	80082-1-0	Effluent Gross		< 4	lb/d			lb/d								N
KY0045390	Airview WWTF	Hardin	001-1	03/31/2017	BOD, carbonaceous [5 day,	80082-1-0	Effluent Gross				8	lb/d	lb/d								N
KY0045390	Airview WWTF	Hardin	001-1	03/31/2017	BOD, carbonaceous [5 day,	80082-1-0	Effluent Gross									< 14	mg/L			mg/L	N
KY0045390	Airview WWTF	Hardin	001-1	03/31/2017	BOD, carbonaceous [5 day,	80082-1-0	Effluent Gross											18	mg/L	mg/L	N
KY0045390	Airview WWTF	Hardin	001-1	02/28/2017	BOD, carbonaceous [5 day,	80082-1-0	Effluent Gross		< 2	lb/d			lb/d								N
KY0045390	Airview WWTF	Hardin	001-1	02/28/2017	BOD, carbonaceous [5 day,	80082-1-0	Effluent Gross				2	lb/d	lb/d								N
KY0045390	Airview WWTF	Hardin	001-1	02/28/2017	BOD, carbonaceous [5 day,	80082-1-0	Effluent Gross									< 10	mg/L			mg/L	N
KY0045390	Airview WWTF	Hardin	001-1	02/28/2017	BOD, carbonaceous [5 day,	80082-1-0	Effluent Gross											18	mg/L	mg/L	N
KY0045390	Airview WWTF	Hardin	001-1	01/31/2017	BOD, carbonaceous [5 day,	80082-1-0	Effluent Gross		3	lb/d			lb/d								N
KY0045390	Airview WWTF	Hardin	001-1	01/31/2017	BOD, carbonaceous [5 day,	80082-1-0	Effluent Gross				5	lb/d	lb/d								N
KY0045390	Airview WWTF	Hardin	001-1	01/31/2017	BOD, carbonaceous [5 day,	80082-1-0	Effluent Gross									21	mg/L			mg/L	N
KY0045390	Airview WWTF	Hardin	001-1	01/31/2017	BOD, carbonaceous [5 day,	80082-1-0	Effluent Gross											30	mg/L	mg/L	N
KY0045390	Airview WWTF	Hardin	001-1	12/31/2016	BOD, carbonaceous [5 day,	80082-1-0	Effluent Gross		< 5	lb/d			lb/d								N
KY0045390	Airview WWTF	Hardin	001-1	12/31/2016	BOD, carbonaceous [5 day,	80082-1-0	Effluent Gross				9	lb/d	lb/d								N
KY0045390	Airview WWTF	Hardin	001-1	12/31/2016	BOD, carbonaceous [5 day,	80082-1-0	Effluent Gross									< 14	mg/L			mg/L	N
KY0045390	Airview WWTF	Hardin	001-1	12/31/2016	BOD, carbonaceous [5 day,	80082-1-0	Effluent Gross											25	mg/L	mg/L	N
KY0045390	Airview WWTF	Hardin	001-1	11/30/2016	BOD, carbonaceous [5 day,	80082-1-0	Effluent Gross		< 1	lb/d			lb/d								N
KY0045390	Airview WWTF	Hardin	001-1	11/30/2016	BOD, carbonaceous [5 day,	80082-1-0	Effluent Gross				1	lb/d	lb/d								N
KY0045390	Airview WWTF	Hardin	001-1	11/30/2016	BOD, carbonaceous [5 day,	80082-1-0	Effluent Gross									< 10	mg/L			mg/L	N
KY0045390	Airview WWTF	Hardin	001-1	11/30/2016	BOD, carbonaceous [5 day,	80082-1-0	Effluent Gross											25	mg/L	mg/L	N
KY0045390	Airview WWTF	Hardin	001-1	10/31/2016	BOD, carbonaceous [5 day,	80082-1-0	Effluent Gross	68	9	lb/d			lb/d								Y
KY0045390	Airview WWTF	Hardin	001-1	10/31/2016	BOD, carbonaceous [5 day,	80082-1-0	Effluent Gross	108			29	lb/d	lb/d								Y
KY0045390	Airview WWTF	Hardin	001-1	10/31/2016	BOD, carbonaceous [5 day,	80082-1-0	Effluent Gross	300								52	mg/L			mg/L	Y
KY0045390	Airview WWTF	Hardin	001-1	09/30/2016	BOD, carbonaceous [5 day,	80082-1-0	Effluent Gross		9	lb/d			lb/d								N
KY0045390	Airview WWTF	Hardin	001-1	09/30/2016	BOD, carbonaceous [5 day,	80082-1-0	Effluent Gross				14	lb/d	lb/d								N
KY0045390	Airview WWTF	Hardin	001-1	09/30/2016	BOD, carbonaceous [5 day,	80082-1-0	Effluent Gross	4								26	mg/L			mg/L	Y
KY0045390	Airview WWTF	Hardin	001-1	09/30/2016	BOD, carbonaceous [5 day,	80082-1-0	Effluent Gross	57										59	mg/L	mg/L	Y
KY0045390	Airview WWTF	Hardin	001-1	08/31/2016	BOD, carbonaceous [5 day,	80082-1-0	Effluent Gross		5	lb/d			lb/d								N
KY0045390	Airview WWTF	Hardin	001-1	08/31/2016	BOD, carbonaceous [5 day,	80082-1-0	Effluent Gross				7	lb/d	lb/d								N
KY0045390	Airview WWTF	Hardin	001-1	08/31/2016	BOD, carbonaceous [5 day,	80082-1-0	Effluent Gross									24	mg/L			mg/L	N
KY0045390	Airview WWTF	Hardin	001-1	08/31/2016	BOD, carbonaceous [5 day,	80082-1-0	Effluent Gross											35	mg/L	mg/L	N
KY0045390	Airview WWTF	Hardin	001-1	07/31/2016	BOD, carbonaceous [5 day,	80082-1-0	Effluent Gross	22	14	lb/d			lb/d								Y
KY0045390	Airview WWTF	Hardin	001-1	07/31/2016	BOD, carbonaceous [5 day,	80082-1-0	Effluent Gross	114			37	lb/d	lb/d								Y
KY0045390	Airview WWTF	Hardin	001-1	07/31/2016	BOD, carbonaceous [5 day,	80082-1-0	Effluent Gross	160								65	mg/L			mg/L	Y
KY0045390	Airview WWTF	Hardin	001-1	07/31/2016	BOD, carbonaceous [5 day,	80082-1-0	Effluent Gross	327										160	mg/L	mg/L	Y
KY0045390	Airview WWTF	Hardin	001-1	06/30/2016	BOD, carbonaceous [5 day,	80082-1-0	Effluent Gross		8	lb/d			lb/d								N
KY0045390	Airview WWTF	Hardin	001-1	06/30/2016	BOD, carbonaceous [5 day,	80082-1-0	Effluent Gross	33			23	lb/d	lb/d								Y
KY0045390	Airview WWTF	Hardin	001-1	06/30/2016	BOD, carbonaceous [5 day,	80082-1-0	Effluent Gross	60								40	mg/L			mg/L	Y
KY0045390	Airview WWTF	Hardin	001-1	06/30/2016	BOD, carbonaceous [5 day,	80082-1-0	Effluent Gross	193										110	mg/L	mg/L	Y
KY0045390	Airview WWTF	Hardin	001-1	05/31/2016	BOD, carbonaceous [5 day,	80082-1-0	Effluent Gross	30	15	lb/d			lb/d								Y
KY0045390	Airview WWTF	Hardin	001-1	05/31/2016	BOD, carbonaceous [5 day,	80082-1-0	Effluent Gross	16			20	lb/d	lb/d								Y
KY0045390	Airview WWTF	Hardin	001-1	05/31/2016	BOD, carbonaceous [5 day,	80082-1-0	Effluent Gross	200								75	mg/L			mg/L	Y
KY0045390	Airview WWTF	Hardin	001-1	05/31/2016	BOD, carbonaceous [5 day,	80082-1-0	Effluent Gross	161										98	mg/L	mg/L	Y
KY0045390	Airview WWTF	Hardin	001-1	04/30/2016	BOD, carbonaceous [5 day,	80082-1-0	Effluent Gross		6	lb/d			lb/d								N
KY0045390	Airview WWTF	Hardin	001-1	04/30/2016	BOD, carbonaceous [5 day,	80082-1-0	Effluent Gross				10	lb/d	lb/d								N
KY0045390	Airview WWTF	Hardin	001-1	04/30/2016	BOD, carbonaceous [5 day,	80082-1-0	Effluent Gross									23	mg/L			mg/L	N
KY0045390	Airview WWTF	Hardin	001-1	04/30/2016	BOD, carbonaceous [5 day,	80082-1-0	Effluent Gross	7										40	mg/L	mg/L	Y
KY0045390	Airview WWTF	Hardin	001-1	03/31/2016	BOD, carbonaceous [5 day,	80082-1-0	Effluent Gross		6	lb/d			lb/d								N
KY0045390	Airview WWTF	Hardin	001-1	03/31/2016	BOD, carbonaceous [5 day,	80082-1-0	Effluent Gross	10			19	lb/d	lb/d								Y
KY0045390	Airview WWTF	Hardin	001-1	03/31/2016	BOD, carbonaceous [5 day,	80082-1-0	Effluent Gross	12								28	mg/L			mg/L	Y
KY0045390	Airview WWTF	Hardin	001-1	03/31/2016	BOD, carbonaceous [5 day,	80082-1-0	Effluent Gross	100										75	mg/L	mg/L	Y
KY0045390	Airview WWTF	Hardin	001-1	02/29/2016	BOD, carbonaceous [5 day,	80082-1-0	Effluent Gross		< 6	lb/d			lb/d								N
KY0045390	Airview WWTF	Hardin	001-1	02/29/2016	BOD, carbonaceous [5 day,	80082-1-0	Effluent Gross				10	lb/d	lb/d								N
KY0045390	Airview WWTF	Hardin	001-1	02/29/2016	BOD, carbonaceous [5 day,	80082-1-0	Effluent Gross									< 24	mg/L			mg/L	N
KY0045390	Airview WWTF	Hardin	001-1	02/29/2016	BOD, carbonaceous [5 day,	80082-1-0	Effluent Gross	20										45	mg/L	mg/L	Y
KY0045390	Airview WWTF	Hardin	001-1	01/31/2016	BOD, carbonaceous [5 day,	80082-1-0	Effluent Gross		< 2	lb/d			lb/d								N
KY0045390	Airview WWTF	Hardin	001-1	01/31/2016	BOD, carbonaceous [5 day,	80082-1-0	Effluent Gross				2	lb/d	lb/d								N
KY0045390	Airview WWTF	Hardin	001-1	01/31/2016	BOD, carbonaceous [5 day,	80082-1-0	Effluent Gross									< 7	mg/L			mg/L	N
KY0045390	Airview WWTF	Hardin	001-1	01/31/2016	BOD, carbonaceous [5 day,	80082-1-0	Effluent Gross											11	mg/L	mg/L	N
KY0045390	Airview WWTF	Hardin	001-1	12/31/2015	BOD, carbonaceous [5 day,	80082-1-0	Effluent Gross		7	lb/d			lb/d								N
KY0045390	Airview WWTF	Hardin	001-1	12/31/2015	BOD, carbonaceous [5 day,	80082-1-0	Effluent Gross				12	lb/d	lb/d								N
KY0045390	Airview WWTF	Hardin	001-1	12/31/2015	BOD, carbonaceous [5 day,	80082-1-0	Effluent Gross	24								31	mg/L			mg/L	Y
KY0045390	Airview WWTF	Hardin	001-1	12/31/2015	BOD, carbonaceous [5 day,	80082-1-0	Effluent Gross	52										57	mg/L	mg/L	Y
KY0045390	Airview WWTF	Hardin	001-1	11/30/2015	BOD, carbonaceous [5 day,	80082-1-0	Effluent Gross		4	lb/d			lb/d								N
KY0045390	Airview WWTF	Hardin	001-1	11/30/2015	BOD, carbonaceous [5 day,	80082-1-0	Effluent Gross				9	lb/d	lb/d								N
KY0045390	Airview WWTF	Hardin	001-1	11/30/2015	BOD, carbonaceous [5 day,	80082-1-0	Effluent Gross									19	mg/L			mg/L	N
KY0045390	Airview WWTF	Hardin	001-1	11/30/2015	BOD, carbonaceous [5 day,	80082-1-0	Effluent Gross	12										42	mg/L	mg/L	Y
KY0045390	Airview WWTF	Hardin	001-1	10/31/2015	BOD, carbonaceous [5 day,	80082-1-0	Effluent Gross		10	lb/d			lb/d								N
KY0045390	Airview WWTF	Hardin	001-1	10/31/2015	BOD, carbonaceous [5 day,	80082-1-0	Effluent Gross	4			18	lb/d	lb/d								Y
KY0045390	Airview WWTF	Hardin	001-1	10/31/2015	BOD, carbonaceous [5 day,	80082-1-0	Effluent Gross	44								36	mg/L			mg/L	Y
KY0045390	Airview WWTF	Hardin	001-1	10/31/2015	BOD, carbonaceous [5 day,	80082-1-0	Effluent Gross	105										77	mg/L	mg/L	Y
KY0045390	Airview WWTF	Hardin	001-1	09/30/2015	BOD, carbonaceous [5 day,	80082-1-0	Effluent Gross		6	lb/d			lb/d								N
KY0045390	Airview WWTF	Hardin	001-1	09/30/2015	BOD, carbonaceous [5 day,	80082-1-0	Effluent Gross				16	lb/d	lb/d								N
KY0045390	Airview WWTF	Hardin	001-1	09/30/2015	BOD, carbonaceous [5 day,	80082-1-0	Effluent Gross									15	mg/L			mg/L	N
KY0045390	Airview WWTF	Hardin	001-1	09/30/2015	BOD, carbonaceous [5 day,	80082-1-0	Effluent Gross											19	mg/L	mg/L	N

KY0045390	Airview WWTF	Hardin	001-1	08/31/2015	BOD, carbonaceous [5 day,	80082-1-0	Effluent Gross		< 3.36	lb/d			lb/d						N
KY0045390	Airview WWTF	Hardin	001-1	08/31/2015	BOD, carbonaceous [5 day,	80082-1-0	Effluent Gross				7	lb/d	lb/d						N
KY0045390	Airview WWTF	Hardin	001-1	08/31/2015	BOD, carbonaceous [5 day,	80082-1-0	Effluent Gross									< 19	mg/L			mg/L	N
KY0045390	Airview WWTF	Hardin	001-1	08/31/2015	BOD, carbonaceous [5 day,	80082-1-0	Effluent Gross											31	mg/L	mg/L	N
KY0045390	Airview WWTF	Hardin	001-1	07/31/2015	BOD, carbonaceous [5 day, 20 Cl	80082-1-0	Effluent Gross		NODI **8**		NODI **8**		lb/d								N
KY0045390	Airview WWTF	Hardin	001-1	07/31/2015	BOD, carbonaceous [5 day,	80082-1-0	Effluent Gross									NODI **8**		NODI **8**		mg/L	N
KY0045390	Airview WWTF	Hardin	001-1	06/30/2015	BOD, carbonaceous [5 day,	80082-1-0	Effluent Gross		6	lb/d			lb/d								N
KY0045390	Airview WWTF	Hardin	001-1	06/30/2015	BOD, carbonaceous [5 day,	80082-1-0	Effluent Gross				12	lb/d	lb/d								N
KY0045390	Airview WWTF	Hardin	001-1	06/30/2015	BOD, carbonaceous [5 day,	80082-1-0	Effluent Gross	24								31	mg/L			mg/L	Y
KY0045390	Airview WWTF	Hardin	001-1	06/30/2015	BOD, carbonaceous [5 day,	80082-1-0	Effluent Gross	68										63	mg/L	mg/L	Y
KY0045390	Airview WWTF	Hardin	001-1	05/31/2015	BOD, carbonaceous [5 day,	80082-1-0	Effluent Gross	48	17	lb/d			lb/d								Y
KY0045390	Airview WWTF	Hardin	001-1	05/31/2015	BOD, carbonaceous [5 day,	80082-1-0	Effluent Gross				17	lb/d	lb/d								N
KY0045390	Airview WWTF	Hardin	001-1	05/31/2015	BOD, carbonaceous [5 day,	80082-1-0	Effluent Gross	16								29	mg/L			mg/L	Y
KY0045390	Airview WWTF	Hardin	001-1	05/31/2015	BOD, carbonaceous [5 day,	80082-1-0	Effluent Gross											29	mg/L	mg/L	N
KY0045390	Airview WWTF	Hardin	001-1	04/30/2015	BOD, carbonaceous [5 day,	80082-1-0	Effluent Gross		9	lb/d			lb/d								N
KY0045390	Airview WWTF	Hardin	001-1	04/30/2015	BOD, carbonaceous [5 day,	80082-1-0	Effluent Gross				9	lb/d	lb/d								N
KY0045390	Airview WWTF	Hardin	001-1	04/30/2015	BOD, carbonaceous [5 day,	80082-1-0	Effluent Gross	92								48	mg/L			mg/L	Y
KY0045390	Airview WWTF	Hardin	001-1	04/30/2015	BOD, carbonaceous [5 day,	80082-1-0	Effluent Gross	28										48	mg/L	mg/L	Y
KY0045390	Airview WWTF	Hardin	001-1	03/31/2015	BOD, carbonaceous [5 day,	80082-1-0	Effluent Gross		10	lb/d			lb/d								N
KY0045390	Airview WWTF	Hardin	001-1	03/31/2015	BOD, carbonaceous [5 day,	80082-1-0	Effluent Gross	10			19	lb/d	lb/d								Y
KY0045390	Airview WWTF	Hardin	001-1	03/31/2015	BOD, carbonaceous [5 day,	80082-1-0	Effluent Gross	168								67	mg/L			mg/L	Y
KY0045390	Airview WWTF	Hardin	001-1	03/31/2015	BOD, carbonaceous [5 day,	80082-1-0	Effluent Gross	247										130	mg/L	mg/L	Y
KY0045390	Airview WWTF	Hardin	001-1	02/28/2015	BOD, carbonaceous [5 day,	80082-1-0	Effluent Gross	30	15	lb/d			lb/d								Y
KY0045390	Airview WWTF	Hardin	001-1	02/28/2015	BOD, carbonaceous [5 day,	80082-1-0	Effluent Gross	10			19	lb/d	lb/d								Y
KY0045390	Airview WWTF	Hardin	001-1	02/28/2015	BOD, carbonaceous [5 day,	80082-1-0	Effluent Gross	180								70	mg/L			mg/L	Y
KY0045390	Airview WWTF	Hardin	001-1	02/28/2015	BOD, carbonaceous [5 day,	80082-1-0	Effluent Gross	129										86	mg/L	mg/L	Y
KY0045390	Airview WWTF	Hardin	001-1	01/31/2015	BOD, carbonaceous [5 day,	80082-1-0	Effluent Gross	265	42	lb/d			lb/d								Y
KY0045390	Airview WWTF	Hardin	001-1	01/31/2015	BOD, carbonaceous [5 day,	80082-1-0	Effluent Gross	677			134	lb/d	lb/d								Y
KY0045390	Airview WWTF	Hardin	001-1	01/31/2015	BOD, carbonaceous [5 day,	80082-1-0	Effluent Gross	132								58	mg/L			mg/L	Y
KY0045390	Airview WWTF	Hardin	001-1	01/31/2015	BOD, carbonaceous [5 day,	80082-1-0	Effluent Gross	167										100	mg/L	mg/L	Y
KY0045390	Airview WWTF	Hardin	001-1	12/31/2014	BOD, carbonaceous [5 day,	80082-1-0	Effluent Gross	22	14	lb/d			lb/d								Y
KY0045390	Airview WWTF	Hardin	001-1	12/31/2014	BOD, carbonaceous [5 day,	80082-1-0	Effluent Gross	39			24	lb/d	lb/d								Y
KY0045390	Airview WWTF	Hardin	001-1	12/31/2014	BOD, carbonaceous [5 day,	80082-1-0	Effluent Gross	168								67	mg/L			mg/L	Y
KY0045390	Airview WWTF	Hardin	001-1	12/31/2014	BOD, carbonaceous [5 day,	80082-1-0	Effluent Gross	161										98	mg/L	mg/L	Y
KY0045390	Airview WWTF	Hardin	001-1	11/30/2014	BOD, carbonaceous [5 day, 20 Cl	80082-1-0	Effluent Gross		NODI **E**		NODI **E**		lb/d								N
KY0045390	Airview WWTF	Hardin	001-1	11/30/2014	BOD, carbonaceous [5 day,	80082-1-0	Effluent Gross									NODI **E**		NODI **E**		mg/L	N
KY0045390	Airview WWTF	Hardin	001-1	10/31/2014	BOD, carbonaceous [5 day, 20 Cl	80082-1-0	Effluent Gross		NODI **E**		NODI **E**		lb/d								N
KY0045390	Airview WWTF	Hardin	001-1	10/31/2014	BOD, carbonaceous [5 day,	80082-1-0	Effluent Gross									NODI **E**		NODI **E**		mg/L	N

Non-Receipt Vio. Exists	DMR Received Date
N	10/28/2019
Y	
Y	
Y	
Y	
Y	
N	4/25/2019
N	3/26/2019
N	2/26/2019
Y	
Y	1/28/2019
Y	12/31/2018
Y	12/31/2018
N	9/28/2018
N	8/27/2018
N	7/27/2018
N	6/28/2018
Y	9/6/2018
N	4/27/2018
N	3/28/2018
N	2/28/2018
N	1/26/2018
N	12/28/2017
N	11/27/2017
N	10/26/2017
N	9/28/2017
N	8/28/2017
N	7/27/2017
N	6/23/2017
N	5/24/2017
N	4/27/2017
N	3/27/2017
N	2/28/2017
N	1/27/2017
N	12/28/2016
N	11/27/2016
N	10/28/2016
N	9/28/2016
N	8/26/2016
N	7/28/2016
Y	9/1/2016
N	5/27/2016
N	4/28/2016
N	3/28/2016
N	2/25/2016
N	1/27/2016
N	12/28/2015
N	11/29/2015
N	10/28/2015
N	9/28/2015
Y	8/26/2015
N	7/23/2015
N	6/30/2015
N	5/28/2015
N	4/28/2015
N	3/27/2015
N	2/27/2015
N	1/28/2015
Y	7/2/2015
Y	7/2/2015
N	10/28/2019
N	10/28/2019
Y	
Y	
Y	
Y	
Y	
N	4/25/2019
N	4/25/2019
N	3/26/2019
N	3/26/2019
N	2/26/2019
N	2/26/2019
Y	
Y	1/28/2019
Y	1/28/2019
Y	12/31/2018
Y	12/31/2018
Y	12/31/2018
Y	12/31/2018
N	9/28/2018
N	9/28/2018
N	8/27/2018
N	8/27/2018
N	7/27/2018
N	7/27/2018
N	6/28/2018
N	6/28/2018
Y	9/6/2018
Y	9/6/2018
N	4/27/2018
N	4/27/2018
N	3/28/2018
N	3/28/2018
N	2/28/2018
N	2/28/2018
N	1/26/2018
N	1/26/2018
N	12/28/2017
N	12/28/2017
N	11/27/2017
N	11/27/2017
N	10/26/2017
N	10/26/2017
N	9/28/2017
N	9/28/2017
N	8/28/2017
N	8/28/2017
N	7/27/2017
N	7/27/2017
N	6/23/2017

N	6/23/2017
N	5/24/2017
N	5/24/2017
N	4/27/2017
N	4/27/2017
N	3/27/2017
N	3/27/2017
N	2/28/2017
N	2/28/2017
N	1/27/2017
N	1/27/2017
N	12/28/2016
N	12/28/2016
N	11/27/2016
N	11/27/2016
N	10/28/2016
N	10/28/2016
N	9/28/2016
N	9/28/2016
N	8/26/2016
N	8/26/2016
N	7/28/2016
N	7/28/2016
Y	9/1/2016
Y	9/1/2016
N	5/27/2016
N	5/27/2016
N	4/28/2016
N	4/28/2016
N	3/28/2016
N	3/28/2016
N	2/25/2016
N	2/25/2016
N	1/27/2016
N	1/27/2016
N	12/28/2015
N	12/28/2015
N	11/29/2015
N	11/29/2015
N	10/28/2015
N	10/28/2015
N	9/28/2015
N	9/28/2015
Y	8/26/2015
N	7/23/2015
N	7/23/2015
N	6/30/2015
N	6/30/2015
N	5/28/2015
N	5/28/2015
N	4/28/2015
N	4/28/2015
N	3/27/2015
N	3/27/2015
N	2/27/2015
N	2/27/2015
N	1/28/2015
N	1/28/2015
Y	7/2/2015
Y	7/2/2015
N	10/28/2019
N	10/28/2019
N	10/28/2019
N	10/28/2019
Y	
Y	
Y	
Y	
Y	
Y	
Y	
Y	
Y	
Y	
N	4/25/2019
N	4/25/2019
N	4/25/2019
N	4/25/2019
N	3/26/2019
N	3/26/2019
N	3/26/2019
N	3/26/2019
N	2/26/2019
N	2/26/2019
N	2/26/2019
N	2/26/2019
Y	
Y	
Y	1/28/2019
Y	1/28/2019
Y	1/28/2019
Y	1/28/2019
Y	12/31/2018
Y	12/31/2018
Y	12/31/2018
Y	12/31/2018
Y	12/31/2018
Y	12/31/2018
Y	12/31/2018
Y	12/31/2018
N	9/28/2018
N	9/28/2018
N	9/28/2018
N	9/28/2018
N	8/27/2018
N	8/27/2018
N	8/27/2018
N	8/27/2018
N	7/27/2018
N	7/27/2018
N	7/27/2018
N	7/27/2018
N	6/28/2018
N	6/28/2018

N	6/28/2018
N	6/28/2018
Y	9/6/2018
Y	9/6/2018
Y	9/6/2018
Y	9/6/2018
N	4/27/2018
N	4/27/2018
N	4/27/2018
N	4/27/2018
N	3/28/2018
N	3/28/2018
N	3/28/2018
N	3/28/2018
N	2/28/2018
N	2/28/2018
N	2/28/2018
N	2/28/2018
N	1/26/2018
N	1/26/2018
N	1/26/2018
N	1/26/2018
N	12/28/2017
N	12/28/2017
N	12/28/2017
N	12/28/2017
N	11/27/2017
N	11/27/2017
N	11/27/2017
N	11/27/2017
N	10/26/2017
N	10/26/2017
N	10/26/2017
N	10/26/2017
N	9/28/2017
N	9/28/2017
N	9/28/2017
N	9/28/2017
N	8/28/2017
N	8/28/2017
N	8/28/2017
N	8/28/2017
N	7/27/2017
N	7/27/2017
N	7/27/2017
N	7/27/2017
N	6/23/2017
N	6/23/2017
N	6/23/2017
N	6/23/2017
N	5/24/2017
N	5/24/2017
N	5/24/2017
N	5/24/2017
N	4/27/2017
N	4/27/2017
N	4/27/2017
N	4/27/2017
N	3/27/2017
N	4/27/2017
N	4/27/2017
N	4/27/2017
N	3/27/2017
N	3/27/2017
N	3/27/2017
N	3/27/2017
N	2/28/2017
N	2/28/2017
N	2/28/2017
N	2/28/2017
N	1/27/2017
N	1/27/2017
N	1/27/2017
N	1/27/2017
N	12/28/2016
N	12/28/2016
N	12/28/2016
N	12/28/2016
N	11/27/2016
N	11/27/2016
N	11/27/2016
N	11/27/2016
N	10/28/2016
N	10/28/2016
N	10/28/2016
N	10/28/2016
N	9/28/2016
N	9/28/2016
N	9/28/2016
N	9/28/2016
N	8/26/2016
N	8/26/2016
N	8/26/2016
N	8/26/2016
N	7/28/2016
N	7/28/2016
N	7/28/2016
N	7/28/2016
Y	9/1/2016
Y	9/1/2016
Y	9/1/2016
Y	9/1/2016
N	5/27/2016
N	5/27/2016
N	5/27/2016
N	5/27/2016
N	4/28/2016
N	4/28/2016
N	4/28/2016
N	4/28/2016
N	3/28/2016
N	3/28/2016
N	3/28/2016
N	3/28/2016
N	2/25/2016
N	2/25/2016
N	2/25/2016
N	2/25/2016

N	1/27/2016
N	1/27/2016
N	1/27/2016
N	1/27/2016
N	12/28/2015
N	12/28/2015
N	12/28/2015
N	12/28/2015
N	11/29/2015
N	11/29/2015
N	11/29/2015
N	11/29/2015
N	10/28/2015
N	10/28/2015
N	10/28/2015
N	10/28/2015
N	9/28/2015
N	9/28/2015
N	9/28/2015
N	9/28/2015
Y	8/26/2015
Y	8/26/2015
N	7/23/2015
N	7/23/2015
N	7/23/2015
N	7/23/2015
N	6/30/2015
N	6/30/2015
N	6/30/2015
N	6/30/2015
N	5/28/2015
N	5/28/2015
N	5/28/2015
N	5/28/2015
N	4/28/2015
N	4/28/2015
N	4/28/2015
N	4/28/2015
N	3/27/2015
N	3/27/2015
N	3/27/2015
N	3/27/2015
N	2/27/2015
N	2/27/2015
N	2/27/2015
N	2/27/2015
N	1/28/2015
N	1/28/2015
N	1/28/2015
N	1/28/2015
Y	7/2/2015
Y	7/2/2015
Y	7/2/2015
Y	7/2/2015
N	10/28/2019
N	10/28/2019
N	10/28/2019
N	10/28/2019
Y	
Y	
Y	
Y	
Y	
Y	
Y	
Y	
Y	12/31/2018
Y	12/31/2018
Y	12/31/2018
Y	12/31/2018
Y	12/31/2018
Y	12/31/2018
Y	12/31/2018
Y	12/31/2018
N	9/28/2018
N	9/28/2018
N	9/28/2018
N	9/28/2018
N	8/27/2018
N	8/27/2018
N	8/27/2018
N	8/27/2018
N	7/27/2018
N	7/27/2018
N	7/27/2018
N	7/27/2018
N	6/28/2018
N	6/28/2018
N	6/28/2018
N	6/28/2018
N	11/27/2017
N	11/27/2017
N	11/27/2017
N	11/27/2017
N	10/26/2017
N	10/26/2017
N	10/26/2017
N	10/26/2017
N	9/28/2017
N	9/28/2017
N	9/28/2017
N	9/28/2017
N	8/28/2017
N	8/28/2017
N	8/28/2017
N	8/28/2017
N	7/27/2017
N	7/27/2017
N	7/27/2017
N	7/27/2017
N	6/23/2017
N	6/23/2017

N	6/23/2017
N	6/23/2017
N	11/27/2016
N	11/27/2016
N	11/27/2016
N	11/27/2016
N	10/28/2016
N	10/28/2016
N	10/28/2016
N	10/28/2016
N	9/28/2016
N	9/28/2016
N	9/28/2016
N	9/28/2016
N	8/26/2016
N	8/26/2016
N	8/26/2016
N	8/26/2016
N	7/28/2016
N	7/28/2016
N	7/28/2016
N	7/28/2016
Y	9/1/2016
Y	9/1/2016
Y	9/1/2016
Y	9/1/2016
N	11/29/2015
N	11/29/2015
N	11/29/2015
N	11/29/2015
N	10/28/2015
N	10/28/2015
N	10/28/2015
N	10/28/2015
N	9/28/2015
N	9/28/2015
N	9/28/2015
N	9/28/2015
Y	8/26/2015
Y	8/26/2015
N	7/23/2015
N	7/23/2015
N	7/23/2015
N	7/23/2015
N	6/30/2015
N	6/30/2015
N	6/30/2015
N	6/30/2015
Y	7/2/2015
Y	7/2/2015
Y	
Y	
N	4/25/2019
N	4/25/2019
N	4/25/2019
N	4/25/2019
N	3/26/2019
N	3/26/2019
N	3/26/2019
N	3/26/2019
N	3/26/2019
N	2/26/2019
N	2/26/2019
N	2/26/2019
N	2/26/2019
Y	
Y	
Y	1/28/2019
Y	1/28/2019
Y	1/28/2019
Y	1/28/2019
Y	9/6/2018
Y	9/6/2018
Y	9/6/2018
Y	9/6/2018
N	4/27/2018
N	4/27/2018
N	4/27/2018
N	4/27/2018
N	3/28/2018
N	3/28/2018
N	3/28/2018
N	3/28/2018
N	2/28/2018
N	2/28/2018
N	2/28/2018
N	2/28/2018
N	1/26/2018
N	1/26/2018
N	1/26/2018
N	1/26/2018
N	12/28/2017
N	12/28/2017
N	12/28/2017
N	12/28/2017
N	5/24/2017
N	5/24/2017
N	5/24/2017
N	5/24/2017
N	4/27/2017
N	4/27/2017
N	4/27/2017
N	4/27/2017
N	3/27/2017
N	3/27/2017
N	3/27/2017
N	3/27/2017
N	2/28/2017
N	2/28/2017
N	2/28/2017
N	2/28/2017
N	1/27/2017
N	1/27/2017
N	1/27/2017

N	1/27/2017
N	12/28/2016
N	12/28/2016
N	12/28/2016
N	12/28/2016
N	5/27/2016
N	5/27/2016
N	5/27/2016
N	5/27/2016
N	4/28/2016
N	4/28/2016
N	4/28/2016
N	4/28/2016
N	3/28/2016
N	3/28/2016
N	3/28/2016
N	3/28/2016
N	2/25/2016
N	2/25/2016
N	2/25/2016
N	2/25/2016
N	1/27/2016
N	1/27/2016
N	1/27/2016
N	1/27/2016
N	12/28/2015
N	12/28/2015
N	12/28/2015
N	12/28/2015
N	5/28/2015
N	5/28/2015
N	5/28/2015
N	5/28/2015
N	4/28/2015
N	4/28/2015
N	4/28/2015
N	4/28/2015
N	3/27/2015
N	3/27/2015
N	3/27/2015
N	3/27/2015
N	2/27/2015
N	2/27/2015
N	2/27/2015
N	2/27/2015
N	1/28/2015
N	1/28/2015
N	1/28/2015
N	1/28/2015
Y	7/2/2015
Y	7/2/2015
N	10/28/2019
N	10/28/2019
Y	
Y	
Y	
Y	
Y	
Y	
Y	
N	4/25/2019
N	4/25/2019
N	3/26/2019
N	3/26/2019
N	2/26/2019
N	2/26/2019
Y	
Y	1/28/2019
Y	1/28/2019
Y	12/31/2018
Y	12/31/2018
Y	12/31/2018
Y	12/31/2018
N	9/28/2018
N	9/28/2018
N	8/27/2018
N	8/27/2018
N	7/27/2018
N	7/27/2018
N	6/28/2018
N	6/28/2018
Y	9/6/2018
Y	9/6/2018
N	4/27/2018
N	4/27/2018
N	3/28/2018
N	3/28/2018
N	2/28/2018
N	2/28/2018
N	1/26/2018
N	1/26/2018
N	12/28/2017
N	12/28/2017
N	11/27/2017
N	11/27/2017
N	10/26/2017
N	10/26/2017
N	9/28/2017
N	9/28/2017
N	8/28/2017
N	8/28/2017
N	7/27/2017
N	7/27/2017
N	6/23/2017
N	6/23/2017
N	5/24/2017
N	5/24/2017
N	4/27/2017
N	4/27/2017
N	3/27/2017
N	3/27/2017
N	2/28/2017
N	2/28/2017
N	1/27/2017
N	1/27/2017

N	12/28/2016
N	12/28/2016
N	11/27/2016
N	11/27/2016
N	10/28/2016
N	10/28/2016
N	9/28/2016
N	9/28/2016
N	8/26/2016
N	8/26/2016
N	7/28/2016
N	7/28/2016
Y	9/1/2016
Y	9/1/2016
N	5/27/2016
N	5/27/2016
N	4/28/2016
N	4/28/2016
N	3/28/2016
N	3/28/2016
N	2/25/2016
N	2/25/2016
N	1/27/2016
N	1/27/2016
N	12/28/2015
N	12/28/2015
N	11/29/2015
N	11/29/2015
N	10/28/2015
N	10/28/2015
N	9/28/2015
N	9/28/2015
Y	8/26/2015
N	7/23/2015
N	7/23/2015
N	6/30/2015
N	6/30/2015
N	5/28/2015
N	5/28/2015
N	4/28/2015
N	4/28/2015
N	3/27/2015
N	3/27/2015
N	2/27/2015
N	2/27/2015
N	1/28/2015
N	1/28/2015
Y	7/2/2015
Y	7/2/2015
N	10/28/2019
N	10/28/2019
Y	
Y	
Y	
Y	
Y	
N	4/25/2019
N	4/25/2019
N	3/26/2019
N	3/26/2019
N	2/26/2019
N	2/26/2019
Y	
Y	1/28/2019
Y	1/28/2019
Y	12/31/2018
Y	12/31/2018
Y	12/31/2018
Y	12/31/2018
N	9/28/2018
N	9/28/2018
N	8/27/2018
N	8/27/2018
N	7/27/2018
N	7/27/2018
N	6/28/2018
N	6/28/2018
Y	9/6/2018
Y	9/6/2018
N	4/27/2018
N	4/27/2018
N	3/28/2018
N	2/28/2018
N	2/28/2018
N	1/26/2018
N	1/26/2018
N	12/28/2017
N	12/28/2017
N	11/27/2017
N	11/27/2017
N	10/26/2017
N	10/26/2017
N	9/28/2017
N	9/28/2017
N	8/28/2017
N	8/28/2017
N	7/27/2017
N	7/27/2017
N	6/23/2017
N	6/23/2017
N	5/24/2017
N	5/24/2017
N	4/27/2017
N	4/27/2017
N	3/27/2017
N	3/27/2017
N	2/28/2017
N	2/28/2017
N	1/27/2017
N	1/27/2017
N	12/28/2016
N	12/28/2016

N	11/27/2016
N	11/27/2016
N	10/28/2016
N	10/28/2016
N	9/28/2016
N	9/28/2016
N	8/26/2016
N	8/26/2016
N	7/28/2016
N	7/28/2016
Y	9/1/2016
Y	9/1/2016
N	5/27/2016
N	5/27/2016
N	4/28/2016
N	4/28/2016
N	3/28/2016
N	3/28/2016
N	2/25/2016
N	2/25/2016
N	1/27/2016
N	1/27/2016
N	12/28/2015
N	12/28/2015
N	11/29/2015
N	11/29/2015
N	10/28/2015
N	10/28/2015
N	9/28/2015
N	9/28/2015
Y	8/26/2015
N	7/23/2015
N	7/23/2015
N	6/30/2015
N	6/30/2015
N	5/28/2015
N	5/28/2015
N	4/28/2015
N	4/28/2015
N	3/27/2015
N	3/27/2015
N	2/27/2015
N	2/27/2015
N	1/28/2015
N	1/28/2015
Y	7/2/2015
Y	7/2/2015
N	10/28/2019
N	10/28/2019
Y	
Y	
Y	
Y	
Y	
N	4/25/2019
N	4/25/2019
N	3/26/2019
N	3/26/2019
N	2/26/2019
N	2/26/2019
Y	
Y	1/28/2019
Y	1/28/2019
Y	12/31/2018
Y	12/31/2018
Y	12/31/2018
Y	12/31/2018
N	9/28/2018
N	9/28/2018
N	8/27/2018
N	8/27/2018
N	7/27/2018
N	7/27/2018
N	6/28/2018
N	6/28/2018
Y	9/6/2018
Y	9/6/2018
N	4/27/2018
N	4/27/2018
N	3/28/2018
N	3/28/2018
N	2/28/2018
N	2/28/2018
N	1/26/2018
N	1/26/2018
N	12/28/2017
N	12/28/2017
N	11/27/2017
N	11/27/2017
N	10/26/2017
N	10/26/2017
N	9/28/2017
N	9/28/2017
N	8/28/2017
N	8/28/2017
N	7/27/2017
N	7/27/2017
N	6/23/2017
N	6/23/2017
N	5/24/2017
N	5/24/2017
N	4/27/2017
N	4/27/2017
N	3/27/2017
N	3/27/2017
N	2/28/2017
N	2/28/2017
N	1/27/2017
N	1/27/2017
N	12/28/2016
N	12/28/2016
N	11/27/2016
N	11/27/2016
N	10/28/2016

N	10/28/2016
N	9/28/2016
N	9/28/2016
N	8/26/2016
N	8/26/2016
N	7/28/2016
N	7/28/2016
Y	9/1/2016
Y	9/1/2016
N	5/27/2016
N	5/27/2016
N	4/28/2016
N	4/28/2016
N	3/28/2016
N	3/28/2016
N	2/25/2016
N	2/25/2016
N	1/27/2016
N	1/27/2016
N	12/28/2015
N	12/28/2015
N	11/29/2015
N	11/29/2015
N	10/28/2015
N	10/28/2015
N	9/28/2015
N	9/28/2015
Y	8/26/2015
N	7/23/2015
N	7/23/2015
N	6/30/2015
N	6/30/2015
N	5/28/2015
N	5/28/2015
N	4/28/2015
N	4/28/2015
N	3/27/2015
N	3/27/2015
N	2/27/2015
N	2/27/2015
N	1/28/2015
N	1/28/2015
Y	7/2/2015
Y	7/2/2015
N	10/28/2019
N	10/28/2019
N	10/28/2019
N	10/28/2019
Y	
Y	
Y	
Y	
Y	
Y	
Y	
Y	
Y	
Y	
N	4/25/2019
N	4/25/2019
N	4/25/2019
N	4/25/2019
N	3/26/2019
N	3/26/2019
N	3/26/2019
N	3/26/2019
N	2/26/2019
N	2/26/2019
N	2/26/2019
N	2/26/2019
Y	
Y	
Y	1/28/2019
Y	1/28/2019
Y	1/28/2019
Y	1/28/2019
Y	12/31/2018
Y	12/31/2018
Y	12/31/2018
Y	12/31/2018
Y	12/31/2018
Y	12/31/2018
Y	12/31/2018
Y	12/31/2018
N	9/28/2018
N	9/28/2018
N	9/28/2018
N	9/28/2018
N	8/27/2018
N	8/27/2018
N	8/27/2018
N	8/27/2018
N	7/27/2018
N	7/27/2018
N	7/27/2018
N	7/27/2018
N	6/28/2018
N	6/28/2018
N	6/28/2018
N	6/28/2018
Y	9/6/2018
Y	9/6/2018
Y	9/6/2018
Y	9/6/2018
N	4/27/2018
N	4/27/2018
N	4/27/2018
N	4/27/2018
N	3/28/2018
N	3/28/2018
N	3/28/2018
N	3/28/2018
N	2/28/2018
N	2/28/2018

N	2/28/2018
N	2/28/2018
N	1/26/2018
N	1/26/2018
N	1/26/2018
N	1/26/2018
N	12/28/2017
N	12/28/2017
N	12/28/2017
N	12/28/2017
N	11/27/2017
N	11/27/2017
N	11/27/2017
N	11/27/2017
N	10/26/2017
N	10/26/2017
N	10/26/2017
N	10/26/2017
N	9/28/2017
N	9/28/2017
N	9/28/2017
N	9/28/2017
N	8/28/2017
N	8/28/2017
N	8/28/2017
N	8/28/2017
N	7/27/2017
N	7/27/2017
N	7/27/2017
N	7/27/2017
N	6/23/2017
N	6/23/2017
N	6/23/2017
N	6/23/2017
N	5/24/2017
N	5/24/2017
N	5/24/2017
N	5/24/2017
N	4/27/2017
N	4/27/2017
N	4/27/2017
N	4/27/2017
N	3/27/2017
N	3/27/2017
N	3/27/2017
N	3/27/2017
N	2/28/2017
N	2/28/2017
N	2/28/2017
N	2/28/2017
N	1/27/2017
N	1/27/2017
N	1/27/2017
N	1/27/2017
N	12/28/2016
N	12/28/2016
N	12/28/2016
N	12/28/2016
N	11/27/2016
N	11/27/2016
N	11/27/2016
N	11/27/2016
N	10/28/2016
N	10/28/2016
N	10/28/2016
N	10/28/2016
N	9/28/2016
N	9/28/2016
N	9/28/2016
N	9/28/2016
N	8/26/2016
N	8/26/2016
N	8/26/2016
N	8/26/2016
N	7/28/2016
N	7/28/2016
N	7/28/2016
N	7/28/2016
Y	9/1/2016
Y	9/1/2016
Y	9/1/2016
Y	9/1/2016
N	5/27/2016
N	5/27/2016
N	5/27/2016
N	5/27/2016
N	4/28/2016
N	4/28/2016
N	4/28/2016
N	4/28/2016
N	3/28/2016
N	3/28/2016
N	3/28/2016
N	3/28/2016
N	2/25/2016
N	2/25/2016
N	2/25/2016
N	2/25/2016
N	1/27/2016
N	1/27/2016
N	1/27/2016
N	1/27/2016
N	12/28/2015
N	12/28/2015
N	12/28/2015
N	12/28/2015
N	11/29/2015
N	11/29/2015
N	11/29/2015
N	11/29/2015
N	10/28/2015
N	10/28/2015
N	10/28/2015
N	10/28/2015

N	9/28/2015
N	9/28/2015
N	9/28/2015
N	9/28/2015
Y	8/26/2015
Y	8/26/2015
N	7/23/2015
N	7/23/2015
N	7/23/2015
N	7/23/2015
N	6/30/2015
N	6/30/2015
N	6/30/2015
N	6/30/2015
N	5/28/2015
N	5/28/2015
N	5/28/2015
N	5/28/2015
N	4/28/2015
N	4/28/2015
N	4/28/2015
N	4/28/2015
N	3/27/2015
N	3/27/2015
N	3/27/2015
N	3/27/2015
N	2/27/2015
N	2/27/2015
N	2/27/2015
N	2/27/2015
N	1/28/2015
N	1/28/2015
N	1/28/2015
N	1/28/2015
Y	7/2/2015
Y	7/2/2015
Y	7/2/2015
Y	7/2/2015

KEY | **<???** | **NODI F** | **NODI V**

NPDES ID	Permit Name	County Name	Perm Feature ID-Limit Set	Mon. Period End Date	Parameter Desc	Param Cd - MLC - Season ID	Monitoring Location Desc	Worst % exced.	Quantity 1	Q1 DMR Value Unit Short Desc	Quantity 2	Q2 DMR Value Unit Short Desc	Limit Value - Quantity Units	Concentration 1	C1 DMR Value Unit Short Desc	Concentration 2	C2 DMR Value Unit Short Desc	Concentration 3	C3 DMR Value Unit Short Desc	Limit Value - Concentration Units
KY0053431	Herrington Haven Subdivision	Garrard	001-1	12/31/2021	Oxygen, dissolved [DO]	00300-1-0	Effluent Gross							6.2	mg/L					mg/L
KY0053431	Herrington Haven Subdivision	Garrard	001-1	09/30/2021	Oxygen, dissolved [DO]	00300-1-0	Effluent Gross							7.6	mg/L					mg/L
KY0053431	Herrington Haven Subdivision	Garrard	001-1	06/30/2021	Oxygen, dissolved [DO]	00300-1-0	Effluent Gross							9.6	mg/L					mg/L
KY0053431	Herrington Haven Subdivision	Garrard	001-1	03/31/2021	Oxygen, dissolved [DO]	00300-1-0	Effluent Gross							5.7	mg/L					mg/L
KY0053431	Herrington Haven Subdivision	Garrard	001-1	12/31/2020	Oxygen, dissolved [DO]	00300-1-0	Effluent Gross							8.3	mg/L					mg/L
KY0053431	Herrington Haven Subdivision	Garrard	001-1	09/30/2020	Oxygen, dissolved [DO]	00300-1-0	Effluent Gross							7.5	mg/L					mg/L
KY0053431	Herrington Haven Subdivision	Garrard	001-1	06/30/2020	Oxygen, dissolved [DO]	00300-1-0	Effluent Gross							7.1	mg/L					mg/L
KY0053431	Herrington Haven Subdivision	Garrard	001-1	03/31/2020	Oxygen, dissolved [DO]	00300-1-0	Effluent Gross							7.4	mg/L					mg/L
KY0053431	Herrington Haven Subdivision	Garrard	001-1	12/31/2019	Oxygen, dissolved [DO]	00300-1-0	Effluent Gross							NODI V						mg/L
KY0053431	Herrington Haven Subdivision	Garrard	001-1	09/30/2019	Oxygen, dissolved [DO]	00300-1-0	Effluent Gross							7.4	mg/L					mg/L
KY0053431	Herrington Haven Subdivision	Garrard	001-1	06/30/2019	Oxygen, dissolved [DO]	00300-1-0	Effluent Gross							7.4	mg/L					mg/L
KY0053431	Herrington Haven Subdivision	Garrard	001-1	03/31/2019	Oxygen, dissolved [DO]	00300-1-0	Effluent Gross							7.54	mg/L					mg/L
KY0053431	Herrington Haven Subdivision	Garrard	001-1	12/31/2018	Oxygen, dissolved [DO]	00300-1-0	Effluent Gross							7.75	mg/L					mg/L
KY0053431	Herrington Haven Subdivision	Garrard	001-1	09/30/2018	Oxygen, dissolved [DO]	00300-1-0	Effluent Gross							NODI V						mg/L
KY0053431	Herrington Haven Subdivision	Garrard	001-1	06/30/2018	Oxygen, dissolved [DO]	00300-1-0	Effluent Gross							NODI F						mg/L
KY0053431	Herrington Haven Subdivision	Garrard	001-1	03/31/2018	Oxygen, dissolved [DO]	00300-1-0	Effluent Gross							8.75	mg/L					mg/L
KY0053431	Herrington Haven Subdivision	Garrard	001-1	12/31/2021	BOD, 5-day, 20 deg. C	00310-1-0	Effluent Gross		1.75	lb/d			lb/d							
KY0053431	Herrington Haven Subdivision	Garrard	001-1	12/31/2021	BOD, 5-day, 20 deg. C	00310-1-0	Effluent Gross				1.75	lb/d	lb/d							
KY0053431	Herrington Haven Subdivision	Garrard	001-1	12/31/2021	BOD, 5-day, 20 deg. C	00310-1-0	Effluent Gross									2	mg/L			mg/L
KY0053431	Herrington Haven Subdivision	Garrard	001-1	12/31/2021	BOD, 5-day, 20 deg. C	00310-1-0	Effluent Gross											2	mg/L	mg/L
KY0053431	Herrington Haven Subdivision	Garrard	001-1	09/30/2021	BOD, 5-day, 20 deg. C	00310-1-0	Effluent Gross		0.175	lb/d			lb/d							
KY0053431	Herrington Haven Subdivision	Garrard	001-1	09/30/2021	BOD, 5-day, 20 deg. C	00310-1-0	Effluent Gross				0.175	lb/d	lb/d							
KY0053431	Herrington Haven Subdivision	Garrard	001-1	09/30/2021	BOD, 5-day, 20 deg. C	00310-1-0	Effluent Gross									7	mg/L			mg/L
KY0053431	Herrington Haven Subdivision	Garrard	001-1	09/30/2021	BOD, 5-day, 20 deg. C	00310-1-0	Effluent Gross											7	mg/L	mg/L
KY0053431	Herrington Haven Subdivision	Garrard	001-1	06/30/2021	BOD, 5-day, 20 deg. C	00310-1-0	Effluent Gross		1.057	lb/d			lb/d							
KY0053431	Herrington Haven Subdivision	Garrard	001-1	06/30/2021	BOD, 5-day, 20 deg. C	00310-1-0	Effluent Gross				1.057	lb/d	lb/d							
KY0053431	Herrington Haven Subdivision	Garrard	001-1	06/30/2021	BOD, 5-day, 20 deg. C	00310-1-0	Effluent Gross									< 4	mg/L			mg/L
KY0053431	Herrington Haven Subdivision	Garrard	001-1	06/30/2021	BOD, 5-day, 20 deg. C	00310-1-0	Effluent Gross											< 4	mg/L	mg/L
KY0053431	Herrington Haven Subdivision	Garrard	001-1	03/31/2021	BOD, 5-day, 20 deg. C	00310-1-0	Effluent Gross		0.023	lb/d			lb/d							
KY0053431	Herrington Haven Subdivision	Garrard	001-1	03/31/2021	BOD, 5-day, 20 deg. C	00310-1-0	Effluent Gross				0.023	lb/d	lb/d							
KY0053431	Herrington Haven Subdivision	Garrard	001-1	03/31/2021	BOD, 5-day, 20 deg. C	00310-1-0	Effluent Gross									< 4	mg/L			mg/L
KY0053431	Herrington Haven Subdivision	Garrard	001-1	03/31/2021	BOD, 5-day, 20 deg. C	00310-1-0	Effluent Gross											< 4	mg/L	mg/L
KY0053431	Herrington Haven Subdivision	Garrard	001-1	12/31/2020	BOD, 5-day, 20 deg. C	00310-1-0	Effluent Gross		0.01	lb/d			lb/d							
KY0053431	Herrington Haven Subdivision	Garrard	001-1	12/31/2020	BOD, 5-day, 20 deg. C	00310-1-0	Effluent Gross				0.01	lb/d	lb/d							
KY0053431	Herrington Haven Subdivision	Garrard	001-1	12/31/2020	BOD, 5-day, 20 deg. C	00310-1-0	Effluent Gross									6	mg/L			mg/L
KY0053431	Herrington Haven Subdivision	Garrard	001-1	12/31/2020	BOD, 5-day, 20 deg. C	00310-1-0	Effluent Gross											6	mg/L	mg/L
KY0053431	Herrington Haven Subdivision	Garrard	001-1	09/30/2020	BOD, 5-day, 20 deg. C	00310-1-0	Effluent Gross		0.02	lb/d			lb/d							
KY0053431	Herrington Haven Subdivision	Garrard	001-1	09/30/2020	BOD, 5-day, 20 deg. C	00310-1-0	Effluent Gross				0.02	lb/d	lb/d							
KY0053431	Herrington Haven Subdivision	Garrard	001-1	09/30/2020	BOD, 5-day, 20 deg. C	00310-1-0	Effluent Gross									5	mg/L			mg/L
KY0053431	Herrington Haven Subdivision	Garrard	001-1	09/30/2020	BOD, 5-day, 20 deg. C	00310-1-0	Effluent Gross											5	mg/L	mg/L
KY0053431	Herrington Haven Subdivision	Garrard	001-1	06/30/2020	BOD, 5-day, 20 deg. C	00310-1-0	Effluent Gross		0.01	lb/d			lb/d							
KY0053431	Herrington Haven Subdivision	Garrard	001-1	06/30/2020	BOD, 5-day, 20 deg. C	00310-1-0	Effluent Gross				0.01	lb/d	lb/d							
KY0053431	Herrington Haven Subdivision	Garrard	001-1	06/30/2020	BOD, 5-day, 20 deg. C	00310-1-0	Effluent Gross									< 3	mg/L			mg/L
KY0053431	Herrington Haven Subdivision	Garrard	001-1	06/30/2020	BOD, 5-day, 20 deg. C	00310-1-0	Effluent Gross											< 3	mg/L	mg/L
KY0053431	Herrington Haven Subdivision	Garrard	001-1	03/31/2020	BOD, 5-day, 20 deg. C	00310-1-0	Effluent Gross		0.04	lb/d			lb/d							
KY0053431	Herrington Haven Subdivision	Garrard	001-1	03/31/2020	BOD, 5-day, 20 deg. C	00310-1-0	Effluent Gross				0.04	lb/d	lb/d							
KY0053431	Herrington Haven Subdivision	Garrard	001-1	03/31/2020	BOD, 5-day, 20 deg. C	00310-1-0	Effluent Gross									19	mg/L			mg/L
KY0053431	Herrington Haven Subdivision	Garrard	001-1	03/31/2020	BOD, 5-day, 20 deg. C	00310-1-0	Effluent Gross											19	mg/L	mg/L
KY0053431	Herrington Haven Subdivision	Garrard	001-1	12/31/2019	BOD, 5-day, 20 deg. C	00310-1-0	Effluent Gross		NODI V				lb/d							
KY0053431	Herrington Haven Subdivision	Garrard	001-1	12/31/2019	BOD, 5-day, 20 deg. C	00310-1-0	Effluent Gross									NODI V		NODI V		mg/L
KY0053431	Herrington Haven Subdivision	Garrard	001-1	09/30/2019	BOD, 5-day, 20 deg. C	00310-1-0	Effluent Gross		0.01	lb/d			lb/d							
KY0053431	Herrington Haven Subdivision	Garrard	001-1	09/30/2019	BOD, 5-day, 20 deg. C	00310-1-0	Effluent Gross				0.01	lb/d	lb/d							
KY0053431	Herrington Haven Subdivision	Garrard	001-1	09/30/2019	BOD, 5-day, 20 deg. C	00310-1-0	Effluent Gross									3	mg/L			mg/L
KY0053431	Herrington Haven Subdivision	Garrard	001-1	09/30/2019	BOD, 5-day, 20 deg. C	00310-1-0	Effluent Gross											3	mg/L	mg/L
KY0053431	Herrington Haven Subdivision	Garrard	001-1	06/30/2019	BOD, 5-day, 20 deg. C	00310-1-0	Effluent Gross		0.1	lb/d			lb/d							
KY0053431	Herrington Haven Subdivision	Garrard	001-1	06/30/2019	BOD, 5-day, 20 deg. C	00310-1-0	Effluent Gross				0.1	lb/d	lb/d							
KY0053431	Herrington Haven Subdivision	Garrard	001-1	06/30/2019	BOD, 5-day, 20 deg. C	00310-1-0	Effluent Gross									11	mg/L			mg/L
KY0053431	Herrington Haven Subdivision	Garrard	001-1	06/30/2019	BOD, 5-day, 20 deg. C	00310-1-0	Effluent Gross											11	mg/L	mg/L
KY0053431	Herrington Haven Subdivision	Garrard	001-1	03/31/2019	BOD, 5-day, 20 deg. C	00310-1-0	Effluent Gross		0.03	lb/d			lb/d							
KY0053431	Herrington Haven Subdivision	Garrard	001-1	03/31/2019	BOD, 5-day, 20 deg. C	00310-1-0	Effluent Gross				0.03	lb/d	lb/d							
KY0053431	Herrington Haven Subdivision	Garrard	001-1	03/31/2019	BOD, 5-day, 20 deg. C	00310-1-0	Effluent Gross									19	mg/L			mg/L
KY0053431	Herrington Haven Subdivision	Garrard	001-1	03/31/2019	BOD, 5-day, 20 deg. C	00310-1-0	Effluent Gross											19	mg/L	mg/L
KY0053431	Herrington Haven Subdivision	Garrard	001-1	12/31/2018	BOD, 5-day, 20 deg. C	00310-1-0	Effluent Gross		0.04	lb/d			lb/d							
KY0053431	Herrington Haven Subdivision	Garrard	001-1	12/31/2018	BOD, 5-day, 20 deg. C	00310-1-0	Effluent Gross				0.04	lb/d	lb/d							
KY0053431	Herrington Haven Subdivision	Garrard	001-1	12/31/2018	BOD, 5-day, 20 deg. C	00310-1-0	Effluent Gross									9	mg/L			mg/L
KY0053431	Herrington Haven Subdivision	Garrard	001-1	12/31/2018	BOD, 5-day, 20 deg. C	00310-1-0	Effluent Gross											9	mg/L	mg/L
KY0053431	Herrington Haven Subdivision	Garrard	001-1	09/30/2018	BOD, 5-day, 20 deg. C	00310-1-0	Effluent Gross		NODI V				lb/d							
KY0053431	Herrington Haven Subdivision	Garrard	001-1	09/30/2018	BOD, 5-day, 20 deg. C	00310-1-0	Effluent Gross									NODI V		NODI V		mg/L
KY0053431	Herrington Haven Subdivision	Garrard	001-1	06/30/2018	BOD, 5-day, 20 deg. C	00310-1-0	Effluent Gross		NODI F		NODI F		lb/d							
KY0053431	Herrington Haven Subdivision	Garrard	001-1	06/30/2018	BOD, 5-day, 20 deg. C	00310-1-0	Effluent Gross									NODI F		NODI F		mg/L
KY0053431	Herrington Haven Subdivision	Garrard	001-1	03/31/2018	BOD, 5-day, 20 deg. C	00310-1-0	Effluent Gross		0.1	lb/d			lb/d							
KY0053431	Herrington Haven Subdivision	Garrard	001-1	03/31/2018	BOD, 5-day, 20 deg. C	00310-1-0	Effluent Gross				0.1	lb/d	lb/d							
KY0053431	Herrington Haven Subdivision	Garrard	001-1	03/31/2018	BOD, 5-day, 20 deg. C	00310-1-0	Effluent Gross									13	mg/L			mg/L
KY0053431	Herrington Haven Subdivision	Garrard	001-1	03/31/2018	BOD, 5-day, 20 deg. C	00310-1-0	Effluent Gross											13	mg/L	mg/L
KY0053431	Herrington Haven Subdivision	Garrard	001-1	12/31/2021	pH	00400-1-0	Effluent Gross							7.24	SU					SU
KY0053431	Herrington Haven Subdivision	Garrard	001-1	12/31/2021	pH	00400-1-0	Effluent Gross											7.24	SU	SU
KY0053431	Herrington Haven Subdivision	Garrard	001-1	09/30/2021	pH	00400-1-0	Effluent Gross							7.45	SU					SU
KY0053431	Herrington Haven Subdivision	Garrard	001-1	09/30/2021	pH	00400-1-0	Effluent Gross											7.45	SU	SU
KY0053431	Herrington Haven Subdivision	Garrard	001-1	06/30/2021	pH	00400-1-0	Effluent Gross							7.62	SU					SU
KY0053431	Herrington Haven Subdivision	Garrard	001-1	06/30/2021	pH	00400-1-0	Effluent Gross											7.62	SU	SU
KY0053431	Herrington Haven Subdivision	Garrard	001-1	03/31/2021	pH	00400-1-0	Effluent Gross							8.77	SU					SU
KY0053431	Herrington Haven Subdivision	Garrard	001-1	03/31/2021	pH	00400-1-0	Effluent Gross											8.77	SU	SU

KY0053431	Herrington Haven Subdivision	Garrard	001-1	12/31/2020	pH	00400-1-0	Effluent Gross							7.61	SU				SU
KY0053431	Herrington Haven Subdivision	Garrard	001-1	12/31/2020	pH	00400-1-0	Effluent Gross											7.61	SU	SU
KY0053431	Herrington Haven Subdivision	Garrard	001-1	09/30/2020	pH	00400-1-0	Effluent Gross							7.31	SU					SU
KY0053431	Herrington Haven Subdivision	Garrard	001-1	09/30/2020	pH	00400-1-0	Effluent Gross											7.31	SU	SU
KY0053431	Herrington Haven Subdivision	Garrard	001-1	06/30/2020	pH	00400-1-0	Effluent Gross							7.4	SU					SU
KY0053431	Herrington Haven Subdivision	Garrard	001-1	06/30/2020	pH	00400-1-0	Effluent Gross											7.4	SU	SU
KY0053431	Herrington Haven Subdivision	Garrard	001-1	03/31/2020	pH	00400-1-0	Effluent Gross							6.6	SU					SU
KY0053431	Herrington Haven Subdivision	Garrard	001-1	03/31/2020	pH	00400-1-0	Effluent Gross											6.6	SU	SU
KY0053431	Herrington Haven Subdivision	Garrard	001-1	12/31/2019	pH	00400-1-0	Effluent Gross							NODI V				NODI V		SU
KY0053431	Herrington Haven Subdivision	Garrard	001-1	09/30/2019	pH	00400-1-0	Effluent Gross							7.68	SU					SU
KY0053431	Herrington Haven Subdivision	Garrard	001-1	09/30/2019	pH	00400-1-0	Effluent Gross											7.68	SU	SU
KY0053431	Herrington Haven Subdivision	Garrard	001-1	06/30/2019	pH	00400-1-0	Effluent Gross							7.75	SU					SU
KY0053431	Herrington Haven Subdivision	Garrard	001-1	06/30/2019	pH	00400-1-0	Effluent Gross											7.75	SU	SU
KY0053431	Herrington Haven Subdivision	Garrard	001-1	03/31/2019	pH	00400-1-0	Effluent Gross							8.27	SU					SU
KY0053431	Herrington Haven Subdivision	Garrard	001-1	03/31/2019	pH	00400-1-0	Effluent Gross											8.27	SU	SU
KY0053431	Herrington Haven Subdivision	Garrard	001-1	12/31/2018	pH	00400-1-0	Effluent Gross							7.67	SU					SU
KY0053431	Herrington Haven Subdivision	Garrard	001-1	12/31/2018	pH	00400-1-0	Effluent Gross											7.67	SU	SU
KY0053431	Herrington Haven Subdivision	Garrard	001-1	09/30/2018	pH	00400-1-0	Effluent Gross							NODI V				NODI V		SU
KY0053431	Herrington Haven Subdivision	Garrard	001-1	06/30/2018	pH	00400-1-0	Effluent Gross							NODI F				NODI F		SU
KY0053431	Herrington Haven Subdivision	Garrard	001-1	03/31/2018	pH	00400-1-0	Effluent Gross							6.85	SU					SU
KY0053431	Herrington Haven Subdivision	Garrard	001-1	03/31/2018	pH	00400-1-0	Effluent Gross											6.85	SU	SU
KY0053431	Herrington Haven Subdivision	Garrard	001-1	12/31/2021	Solids, total suspended	00530-1-0	Effluent Gross	114	5.25	lb/d			lb/d							
KY0053431	Herrington Haven Subdivision	Garrard	001-1	12/31/2021	Solids, total suspended	00530-1-0	Effluent Gross	43			5.25	lb/d	lb/d							
KY0053431	Herrington Haven Subdivision	Garrard	001-1	12/31/2021	Solids, total suspended	00530-1-0	Effluent Gross									6	mg/L			mg/L
KY0053431	Herrington Haven Subdivision	Garrard	001-1	12/31/2021	Solids, total suspended	00530-1-0	Effluent Gross											6	mg/L	mg/L
KY0053431	Herrington Haven Subdivision	Garrard	001-1	09/30/2021	Solids, total suspended	00530-1-0	Effluent Gross	317	10.22	lb/d			lb/d							
KY0053431	Herrington Haven Subdivision	Garrard	001-1	09/30/2021	Solids, total suspended	00530-1-0	Effluent Gross	178			10.22	lb/d	lb/d							
KY0053431	Herrington Haven Subdivision	Garrard	001-1	09/30/2021	Solids, total suspended	00530-1-0	Effluent Gross									7	mg/L			mg/L
KY0053431	Herrington Haven Subdivision	Garrard	001-1	09/30/2021	Solids, total suspended	00530-1-0	Effluent Gross											7	mg/L	mg/L
KY0053431	Herrington Haven Subdivision	Garrard	001-1	06/30/2021	Solids, total suspended	00530-1-0	Effluent Gross	2058	52.88	lb/d			lb/d							
KY0053431	Herrington Haven Subdivision	Garrard	001-1	06/30/2021	Solids, total suspended	00530-1-0	Effluent Gross	1337			52.88	lb/d	lb/d							
KY0053431	Herrington Haven Subdivision	Garrard	001-1	06/30/2021	Solids, total suspended	00530-1-0	Effluent Gross									< 6	mg/L			mg/L
KY0053431	Herrington Haven Subdivision	Garrard	001-1	06/30/2021	Solids, total suspended	00530-1-0	Effluent Gross											< 6	mg/L	mg/L
KY0053431	Herrington Haven Subdivision	Garrard	001-1	03/31/2021	Solids, total suspended	00530-1-0	Effluent Gross		1.169	lb/d			lb/d							
KY0053431	Herrington Haven Subdivision	Garrard	001-1	03/31/2021	Solids, total suspended	00530-1-0	Effluent Gross				1.169	lb/d	lb/d							
KY0053431	Herrington Haven Subdivision	Garrard	001-1	03/31/2021	Solids, total suspended	00530-1-0	Effluent Gross									< 6	mg/L			mg/L
KY0053431	Herrington Haven Subdivision	Garrard	001-1	03/31/2021	Solids, total suspended	00530-1-0	Effluent Gross											< 6	mg/L	mg/L
KY0053431	Herrington Haven Subdivision	Garrard	001-1	12/31/2020	Solids, total suspended	00530-1-0	Effluent Gross		0.01	lb/d			lb/d							
KY0053431	Herrington Haven Subdivision	Garrard	001-1	12/31/2020	Solids, total suspended	00530-1-0	Effluent Gross				0.01	lb/d	lb/d							
KY0053431	Herrington Haven Subdivision	Garrard	001-1	12/31/2020	Solids, total suspended	00530-1-0	Effluent Gross									6	mg/L			mg/L
KY0053431	Herrington Haven Subdivision	Garrard	001-1	12/31/2020	Solids, total suspended	00530-1-0	Effluent Gross											6	mg/L	mg/L
KY0053431	Herrington Haven Subdivision	Garrard	001-1	09/30/2020	Solids, total suspended	00530-1-0	Effluent Gross		0.01	lb/d			lb/d							
KY0053431	Herrington Haven Subdivision	Garrard	001-1	09/30/2020	Solids, total suspended	00530-1-0	Effluent Gross				0.01	lb/d	lb/d							
KY0053431	Herrington Haven Subdivision	Garrard	001-1	09/30/2020	Solids, total suspended	00530-1-0	Effluent Gross									< 2	mg/L			mg/L
KY0053431	Herrington Haven Subdivision	Garrard	001-1	09/30/2020	Solids, total suspended	00530-1-0	Effluent Gross											< 2	mg/L	mg/L
KY0053431	Herrington Haven Subdivision	Garrard	001-1	06/30/2020	Solids, total suspended	00530-1-0	Effluent Gross		0.004	lb/d			lb/d							
KY0053431	Herrington Haven Subdivision	Garrard	001-1	06/30/2020	Solids, total suspended	00530-1-0	Effluent Gross				0.004	lb/d	lb/d							
KY0053431	Herrington Haven Subdivision	Garrard	001-1	06/30/2020	Solids, total suspended	00530-1-0	Effluent Gross									< 2	mg/L			mg/L
KY0053431	Herrington Haven Subdivision	Garrard	001-1	06/30/2020	Solids, total suspended	00530-1-0	Effluent Gross											< 2	mg/L	mg/L
KY0053431	Herrington Haven Subdivision	Garrard	001-1	03/31/2020	Solids, total suspended	00530-1-0	Effluent Gross		0.13	lb/d			lb/d							
KY0053431	Herrington Haven Subdivision	Garrard	001-1	03/31/2020	Solids, total suspended	00530-1-0	Effluent Gross				0.13	lb/d	lb/d							
KY0053431	Herrington Haven Subdivision	Garrard	001-1	03/31/2020	Solids, total suspended	00530-1-0	Effluent Gross									6	mg/L			mg/L
KY0053431	Herrington Haven Subdivision	Garrard	001-1	03/31/2020	Solids, total suspended	00530-1-0	Effluent Gross											6	mg/L	mg/L
KY0053431	Herrington Haven Subdivision	Garrard	001-1	12/31/2019	Solids, total suspended	00530-1-0	Effluent Gross		NODI V				lb/d							
KY0053431	Herrington Haven Subdivision	Garrard	001-1	12/31/2019	Solids, total suspended	00530-1-0	Effluent Gross									NODI V		NODI V		mg/L
KY0053431	Herrington Haven Subdivision	Garrard	001-1	09/30/2019	Solids, total suspended	00530-1-0	Effluent Gross		0.01	lb/d			lb/d							
KY0053431	Herrington Haven Subdivision	Garrard	001-1	09/30/2019	Solids, total suspended	00530-1-0	Effluent Gross				0.01	lb/d	lb/d							
KY0053431	Herrington Haven Subdivision	Garrard	001-1	09/30/2019	Solids, total suspended	00530-1-0	Effluent Gross									2	mg/L			mg/L
KY0053431	Herrington Haven Subdivision	Garrard	001-1	09/30/2019	Solids, total suspended	00530-1-0	Effluent Gross											2	mg/L	mg/L
KY0053431	Herrington Haven Subdivision	Garrard	001-1	06/30/2019	Solids, total suspended	00530-1-0	Effluent Gross		0.02	lb/d			lb/d							
KY0053431	Herrington Haven Subdivision	Garrard	001-1	06/30/2019	Solids, total suspended	00530-1-0	Effluent Gross				0.02	lb/d	lb/d							
KY0053431	Herrington Haven Subdivision	Garrard	001-1	06/30/2019	Solids, total suspended	00530-1-0	Effluent Gross									2	mg/L			mg/L
KY0053431	Herrington Haven Subdivision	Garrard	001-1	06/30/2019	Solids, total suspended	00530-1-0	Effluent Gross											2	mg/L	mg/L
KY0053431	Herrington Haven Subdivision	Garrard	001-1	03/31/2019	Solids, total suspended	00530-1-0	Effluent Gross		0.04	lb/d			lb/d							
KY0053431	Herrington Haven Subdivision	Garrard	001-1	03/31/2019	Solids, total suspended	00530-1-0	Effluent Gross				0.04	lb/d	lb/d							
KY0053431	Herrington Haven Subdivision	Garrard	001-1	03/31/2019	Solids, total suspended	00530-1-0	Effluent Gross									24	mg/L			mg/L
KY0053431	Herrington Haven Subdivision	Garrard	001-1	03/31/2019	Solids, total suspended	00530-1-0	Effluent Gross											24	mg/L	mg/L
KY0053431	Herrington Haven Subdivision	Garrard	001-1	12/31/2018	Solids, total suspended	00530-1-0	Effluent Gross		0.01	lb/d			lb/d							
KY0053431	Herrington Haven Subdivision	Garrard	001-1	12/31/2018	Solids, total suspended	00530-1-0	Effluent Gross				0.01	lb/d	lb/d							
KY0053431	Herrington Haven Subdivision	Garrard	001-1	12/31/2018	Solids, total suspended	00530-1-0	Effluent Gross									< 2	mg/L			mg/L
KY0053431	Herrington Haven Subdivision	Garrard	001-1	12/31/2018	Solids, total suspended	00530-1-0	Effluent Gross											< 2	mg/L	mg/L
KY0053431	Herrington Haven Subdivision	Garrard	001-1	09/30/2018	Solids, total suspended	00530-1-0	Effluent Gross		NODI V				lb/d							
KY0053431	Herrington Haven Subdivision	Garrard	001-1	09/30/2018	Solids, total suspended	00530-1-0	Effluent Gross									NODI V		NODI V		mg/L
KY0053431	Herrington Haven Subdivision	Garrard	001-1	06/30/2018	Solids, total suspended	00530-1-0	Effluent Gross		NODI F		NODI F		lb/d							
KY0053431	Herrington Haven Subdivision	Garrard	001-1	06/30/2018	Solids, total suspended	00530-1-0	Effluent Gross									NODI F		NODI F		mg/L
KY0053431	Herrington Haven Subdivision	Garrard	001-1	03/31/2018	Solids, total suspended	00530-1-0	Effluent Gross		0.04	lb/d			lb/d							
KY0053431	Herrington Haven Subdivision	Garrard	001-1	03/31/2018	Solids, total suspended	00530-1-0	Effluent Gross				0.04	lb/d	lb/d							
KY0053431	Herrington Haven Subdivision	Garrard	001-1	03/31/2018	Solids, total suspended	00530-1-0	Effluent Gross									10	mg/L			mg/L
KY0053431	Herrington Haven Subdivision	Garrard	001-1	03/31/2018	Solids, total suspended	00530-1-0	Effluent Gross											10	mg/L	mg/L
KY0053431	Herrington Haven Subdivision	Garrard	001-1	12/31/2021	Nitrogen, total [as N]	00600-1-0	Effluent Gross									33.2	mg/L			mg/L
KY0053431	Herrington Haven Subdivision	Garrard	001-1	12/31/2021	Nitrogen, total [as N]	00600-1-0	Effluent Gross											33.2	mg/L	mg/L
KY0053431	Herrington Haven Subdivision	Garrard	001-1	09/30/2021	Nitrogen, total [as N]	00600-1-0	Effluent Gross									21.4	mg/L			mg/L
KY0053431	Herrington Haven Subdivision	Garrard	001-1	09/30/2021	Nitrogen, total [as N]	00600-1-0	Effluent Gross											21.4	mg/L	mg/L
KY0053431	Herrington Haven Subdivision	Garrard	001-1	06/30/2021	Nitrogen, total [as N]	00600-1-0	Effluent Gross									9.8	mg/L			mg/L
KY0053431	Herrington Haven Subdivision	Garrard	001-1	06/30/2021	Nitrogen, total [as N]	00600-1-0	Effluent Gross											9.8	mg/L	mg/L
KY0053431	Herrington Haven Subdivision	Garrard	001-1	03/31/2021	Nitrogen, total [as N]	00600-1-0	Effluent Gross									22.8	mg/L			mg/L
KY0053431	Herrington Haven Subdivision	Garrard	001-1	03/31/2021	Nitrogen, total [as N]	00600-1-0	Effluent Gross											22.8	mg/L	mg/L
KY0053431	Herrington Haven Subdivision	Garrard	001-1	12/31/2020	Nitrogen, total [as N]	00600-1-0	Effluent Gross									5	mg/L			mg/L
KY0053431	Herrington Haven Subdivision	Garrard	001-1	12/31/2020	Nitrogen, total [as N]	00600-1-0	Effluent Gross											5	mg/L	mg/L
KY0053431	Herrington Haven Subdivision	Garrard	001-1	09/30/2020	Nitrogen, total [as N]	00600-1-0	Effluent Gross									4	mg/L			mg/L

KY0053431	Herrington Haven Subdivision	Garrard	001-1	09/30/2020	Nitrogen, total [as N]	00600-1-0	Effluent Gross											4	mg/L	mg/L
KY0053431	Herrington Haven Subdivision	Garrard	001-1	06/30/2020	Nitrogen, total [as N]	00600-1-0	Effluent Gross									6	mg/L			mg/L
KY0053431	Herrington Haven Subdivision	Garrard	001-1	06/30/2020	Nitrogen, total [as N]	00600-1-0	Effluent Gross											6	mg/L	mg/L
KY0053431	Herrington Haven Subdivision	Garrard	001-1	03/31/2020	Nitrogen, total [as N]	00600-1-0	Effluent Gross									4	mg/L			mg/L
KY0053431	Herrington Haven Subdivision	Garrard	001-1	03/31/2020	Nitrogen, total [as N]	00600-1-0	Effluent Gross											4	mg/L	mg/L
KY0053431	Herrington Haven Subdivision	Garrard	001-1	12/31/2019	Nitrogen, total [as N]	00600-1-0	Effluent Gross									NODI V		NODI V		mg/L
KY0053431	Herrington Haven Subdivision	Garrard	001-1	09/30/2019	Nitrogen, total [as N]	00600-1-0	Effluent Gross									17	mg/L			mg/L
KY0053431	Herrington Haven Subdivision	Garrard	001-1	09/30/2019	Nitrogen, total [as N]	00600-1-0	Effluent Gross											17	mg/L	mg/L
KY0053431	Herrington Haven Subdivision	Garrard	001-1	06/30/2019	Nitrogen, total [as N]	00600-1-0	Effluent Gross									5	mg/L			mg/L
KY0053431	Herrington Haven Subdivision	Garrard	001-1	06/30/2019	Nitrogen, total [as N]	00600-1-0	Effluent Gross											5	mg/L	mg/L
KY0053431	Herrington Haven Subdivision	Garrard	001-1	03/31/2019	Nitrogen, total [as N]	00600-1-0	Effluent Gross									26	mg/L			mg/L
KY0053431	Herrington Haven Subdivision	Garrard	001-1	03/31/2019	Nitrogen, total [as N]	00600-1-0	Effluent Gross											26	mg/L	mg/L
KY0053431	Herrington Haven Subdivision	Garrard	001-1	12/31/2018	Nitrogen, total [as N]	00600-1-0	Effluent Gross									5	mg/L			mg/L
KY0053431	Herrington Haven Subdivision	Garrard	001-1	12/31/2018	Nitrogen, total [as N]	00600-1-0	Effluent Gross											5	mg/L	mg/L
KY0053431	Herrington Haven Subdivision	Garrard	001-1	09/30/2018	Nitrogen, total [as N]	00600-1-0	Effluent Gross									NODI V		NODI V		mg/L
KY0053431	Herrington Haven Subdivision	Garrard	001-1	06/30/2018	Nitrogen, total [as N]	00600-1-0	Effluent Gross									NODI F		NODI F		mg/L
KY0053431	Herrington Haven Subdivision	Garrard	001-1	03/31/2018	Nitrogen, total [as N]	00600-1-0	Effluent Gross									17	mg/L			mg/L
KY0053431	Herrington Haven Subdivision	Garrard	001-1	03/31/2018	Nitrogen, total [as N]	00600-1-0	Effluent Gross											17	mg/L	mg/L
KY0053431	Herrington Haven Subdivision	Garrard	001-1	12/31/2021	Nitrogen, ammonia total [as	00610-1-0	Effluent Gross		0.13	lb/d			lb/d							
KY0053431	Herrington Haven Subdivision	Garrard	001-1	12/31/2021	Nitrogen, ammonia total [as	00610-1-0	Effluent Gross				0.13	lb/d	lb/d							
KY0053431	Herrington Haven Subdivision	Garrard	001-1	12/31/2021	Nitrogen, ammonia total [as	00610-1-0	Effluent Gross									0.15	mg/L			mg/L
KY0053431	Herrington Haven Subdivision	Garrard	001-1	12/31/2021	Nitrogen, ammonia total [as	00610-1-0	Effluent Gross											0.15	mg/L	mg/L
KY0053431	Herrington Haven Subdivision	Garrard	001-1	09/30/2021	Nitrogen, ammonia total [as	00610-1-0	Effluent Gross	946	17.05	lb/d			lb/d							
KY0053431	Herrington Haven Subdivision	Garrard	001-1	09/30/2021	Nitrogen, ammonia total [as	00610-1-0	Effluent Gross	596			17.05	lb/d	lb/d							
KY0053431	Herrington Haven Subdivision	Garrard	001-1	09/30/2021	Nitrogen, ammonia total [as	00610-1-0	Effluent Gross									< .2	mg/L			mg/L
KY0053431	Herrington Haven Subdivision	Garrard	001-1	09/30/2021	Nitrogen, ammonia total [as	00610-1-0	Effluent Gross											< .2	mg/L	mg/L
KY0053431	Herrington Haven Subdivision	Garrard	001-1	06/30/2021	Nitrogen, ammonia total [as	00610-1-0	Effluent Gross	5312	88.21	lb/d			lb/d							
KY0053431	Herrington Haven Subdivision	Garrard	001-1	06/30/2021	Nitrogen, ammonia total [as	00610-1-0	Effluent Gross	3500			88.21	lb/d	lb/d							
KY0053431	Herrington Haven Subdivision	Garrard	001-1	06/30/2021	Nitrogen, ammonia total [as	00610-1-0	Effluent Gross									< .2	mg/L			mg/L
KY0053431	Herrington Haven Subdivision	Garrard	001-1	06/30/2021	Nitrogen, ammonia total [as	00610-1-0	Effluent Gross											< .2	mg/L	mg/L
KY0053431	Herrington Haven Subdivision	Garrard	001-1	03/31/2021	Nitrogen, ammonia total [as	00610-1-0	Effluent Gross	20	1.949	lb/d			lb/d							
KY0053431	Herrington Haven Subdivision	Garrard	001-1	03/31/2021	Nitrogen, ammonia total [as	00610-1-0	Effluent Gross				1.949	lb/d	lb/d							
KY0053431	Herrington Haven Subdivision	Garrard	001-1	03/31/2021	Nitrogen, ammonia total [as	00610-1-0	Effluent Gross									< .2	mg/L			mg/L
KY0053431	Herrington Haven Subdivision	Garrard	001-1	03/31/2021	Nitrogen, ammonia total [as	00610-1-0	Effluent Gross											< .2	mg/L	mg/L
KY0053431	Herrington Haven Subdivision	Garrard	001-1	12/31/2020	Nitrogen, ammonia total [as	00610-1-0	Effluent Gross		0.0001	lb/d			lb/d							
KY0053431	Herrington Haven Subdivision	Garrard	001-1	12/31/2020	Nitrogen, ammonia total [as	00610-1-0	Effluent Gross				0.0001	lb/d	lb/d							
KY0053431	Herrington Haven Subdivision	Garrard	001-1	12/31/2020	Nitrogen, ammonia total [as	00610-1-0	Effluent Gross									< .05	mg/L			mg/L
KY0053431	Herrington Haven Subdivision	Garrard	001-1	12/31/2020	Nitrogen, ammonia total [as	00610-1-0	Effluent Gross											< .05	mg/L	mg/L
KY0053431	Herrington Haven Subdivision	Garrard	001-1	09/30/2020	Nitrogen, ammonia total [as	00610-1-0	Effluent Gross		0.0005	lb/d			lb/d							
KY0053431	Herrington Haven Subdivision	Garrard	001-1	09/30/2020	Nitrogen, ammonia total [as	00610-1-0	Effluent Gross				0.0005	lb/d	lb/d							
KY0053431	Herrington Haven Subdivision	Garrard	001-1	09/30/2020	Nitrogen, ammonia total [as	00610-1-0	Effluent Gross									0.13	mg/L			mg/L
KY0053431	Herrington Haven Subdivision	Garrard	001-1	09/30/2020	Nitrogen, ammonia total [as	00610-1-0	Effluent Gross											0.13	mg/L	mg/L
KY0053431	Herrington Haven Subdivision	Garrard	001-1	06/30/2020	Nitrogen, ammonia total [as	00610-1-0	Effluent Gross		0.01	lb/d			lb/d							
KY0053431	Herrington Haven Subdivision	Garrard	001-1	06/30/2020	Nitrogen, ammonia total [as	00610-1-0	Effluent Gross				0.01	lb/d	lb/d							
KY0053431	Herrington Haven Subdivision	Garrard	001-1	06/30/2020	Nitrogen, ammonia total [as	00610-1-0	Effluent Gross									3	mg/L			mg/L
KY0053431	Herrington Haven Subdivision	Garrard	001-1	03/31/2020	Nitrogen, ammonia total [as	00610-1-0	Effluent Gross		0.003	lb/d			lb/d							
KY0053431	Herrington Haven Subdivision	Garrard	001-1	03/31/2020	Nitrogen, ammonia total [as	00610-1-0	Effluent Gross				0.003	lb/d	lb/d							
KY0053431	Herrington Haven Subdivision	Garrard	001-1	03/31/2020	Nitrogen, ammonia total [as	00610-1-0	Effluent Gross									0.16	mg/L			mg/L
KY0053431	Herrington Haven Subdivision	Garrard	001-1	03/31/2020	Nitrogen, ammonia total [as	00610-1-0	Effluent Gross											0.16	mg/L	mg/L
KY0053431	Herrington Haven Subdivision	Garrard	001-1	12/31/2019	Nitrogen, ammonia total [as	00610-1-0	Effluent Gross		NODI V				lb/d							
KY0053431	Herrington Haven Subdivision	Garrard	001-1	12/31/2019	Nitrogen, ammonia total [as	00610-1-0	Effluent Gross									NODI V		NODI V		mg/L
KY0053431	Herrington Haven Subdivision	Garrard	001-1	09/30/2019	Nitrogen, ammonia total [as	00610-1-0	Effluent Gross		0.0002	lb/d			lb/d							
KY0053431	Herrington Haven Subdivision	Garrard	001-1	09/30/2019	Nitrogen, ammonia total [as	00610-1-0	Effluent Gross				0.0002	lb/d	lb/d							
KY0053431	Herrington Haven Subdivision	Garrard	001-1	09/30/2019	Nitrogen, ammonia total [as	00610-1-0	Effluent Gross									0.05	mg/L			mg/L
KY0053431	Herrington Haven Subdivision	Garrard	001-1	09/30/2019	Nitrogen, ammonia total [as	00610-1-0	Effluent Gross											0.05	mg/L	mg/L
KY0053431	Herrington Haven Subdivision	Garrard	001-1	06/30/2019	Nitrogen, ammonia total [as	00610-1-0	Effluent Gross		0.001	lb/d			lb/d							
KY0053431	Herrington Haven Subdivision	Garrard	001-1	06/30/2019	Nitrogen, ammonia total [as	00610-1-0	Effluent Gross				0.001	lb/d	lb/d							
KY0053431	Herrington Haven Subdivision	Garrard	001-1	06/30/2019	Nitrogen, ammonia total [as	00610-1-0	Effluent Gross									0.11	mg/L			mg/L
KY0053431	Herrington Haven Subdivision	Garrard	001-1	06/30/2019	Nitrogen, ammonia total [as	00610-1-0	Effluent Gross											0.11	mg/L	mg/L
KY0053431	Herrington Haven Subdivision	Garrard	001-1	03/31/2019	Nitrogen, ammonia total [as	00610-1-0	Effluent Gross		0.0001	lb/d			lb/d							
KY0053431	Herrington Haven Subdivision	Garrard	001-1	03/31/2019	Nitrogen, ammonia total [as	00610-1-0	Effluent Gross				0.0001	lb/d	lb/d							
KY0053431	Herrington Haven Subdivision	Garrard	001-1	03/31/2019	Nitrogen, ammonia total [as	00610-1-0	Effluent Gross									< .05	mg/L			mg/L
KY0053431	Herrington Haven Subdivision	Garrard	001-1	03/31/2019	Nitrogen, ammonia total [as	00610-1-0	Effluent Gross											< .05	mg/L	mg/L
KY0053431	Herrington Haven Subdivision	Garrard	001-1	12/31/2018	Nitrogen, ammonia total [as	00610-1-0	Effluent Gross		0.0002	lb/d			lb/d							
KY0053431	Herrington Haven Subdivision	Garrard	001-1	12/31/2018	Nitrogen, ammonia total [as	00610-1-0	Effluent Gross				0.0002	lb/d	lb/d							
KY0053431	Herrington Haven Subdivision	Garrard	001-1	12/31/2018	Nitrogen, ammonia total [as	00610-1-0	Effluent Gross									< .05	mg/L			mg/L
KY0053431	Herrington Haven Subdivision	Garrard	001-1	12/31/2018	Nitrogen, ammonia total [as	00610-1-0	Effluent Gross											< .05	mg/L	mg/L
KY0053431	Herrington Haven Subdivision	Garrard	001-1	09/30/2018	Nitrogen, ammonia total [as	00610-1-0	Effluent Gross		NODI V				lb/d							
KY0053431	Herrington Haven Subdivision	Garrard	001-1	09/30/2018	Nitrogen, ammonia total [as	00610-1-0	Effluent Gross									NODI V		NODI V		mg/L
KY0053431	Herrington Haven Subdivision	Garrard	001-1	06/30/2018	Nitrogen, ammonia total [as	00610-1-0	Effluent Gross		NODI F		NODI F		lb/d							
KY0053431	Herrington Haven Subdivision	Garrard	001-1	06/30/2018	Nitrogen, ammonia total [as	00610-1-0	Effluent Gross									NODI F		NODI F		mg/L
KY0053431	Herrington Haven Subdivision	Garrard	001-1	03/31/2018	Nitrogen, ammonia total [as	00610-1-0	Effluent Gross		0.0003	lb/d			lb/d							
KY0053431	Herrington Haven Subdivision	Garrard	001-1	03/31/2018	Nitrogen, ammonia total [as	00610-1-0	Effluent Gross				0.0003	lb/d	lb/d							
KY0053431	Herrington Haven Subdivision	Garrard	001-1	03/31/2018	Nitrogen, ammonia total [as	00610-1-0	Effluent Gross									0.08	mg/L			mg/L
KY0053431	Herrington Haven Subdivision	Garrard	001-1	03/31/2018	Nitrogen, ammonia total [as	00610-1-0	Effluent Gross											0.08	mg/L	mg/L
KY0053431	Herrington Haven Subdivision	Garrard	001-1	12/31/2021	Phosphorus, total [as P]	00665-1-0	Effluent Gross	50								1.5	mg/L			mg/L
KY0053431	Herrington Haven Subdivision	Garrard	001-1	12/31/2021	Phosphorus, total [as P]	00665-1-0	Effluent Gross											1.5	mg/L	mg/L
KY0053431	Herrington Haven Subdivision	Garrard	001-1	09/30/2021	Phosphorus, total [as P]	00665-1-0	Effluent Gross	830								9.3	mg/L			mg/L
KY0053431	Herrington Haven Subdivision	Garrard	001-1	09/30/2021	Phosphorus, total [as P]	00665-1-0	Effluent Gross											9.3	mg/L	mg/L
KY0053431	Herrington Haven Subdivision	Garrard	001-1	06/30/2021	Phosphorus, total [as P]	00665-1-0	Effluent Gross	520								6.2	mg/L			mg/L
KY0053431	Herrington Haven Subdivision	Garrard	001-1	06/30/2021	Phosphorus, total [as P]	00665-1-0	Effluent Gross											6.2	mg/L	mg/L
KY0053431	Herrington Haven Subdivision	Garrard	001-1	03/31/2021	Phosphorus, total [as P]	00665-1-0	Effluent Gross	680								7.8	mg/L			mg/L
KY0053431	Herrington Haven Subdivision	Garrard	001-1	03/31/2021	Phosphorus, total [as P]	00665-1-0	Effluent Gross											7.8	mg/L	mg/L
KY0053431	Herrington Haven Subdivision	Garrard	001-1	12/31/2020	Phosphorus, total [as P]	00665-1-0	Effluent Gross	347								4.47	mg/L			mg/L
KY0053431	Herrington Haven Subdivision	Garrard	001-1	12/31/2020	Phosphorus, total [as P]	00665-1-0	Effluent Gross											4.47	mg/L	mg/L
KY0053431	Herrington Haven Subdivision	Garrard	001-1	09/30/2020	Phosphorus, total [as P]	00665-1-0	Effluent Gross	208								3.08	mg/L			mg/L
KY0053431	Herrington Haven Subdivision	Garrard	001-1	09/30/2020	Phosphorus, total [as P]	00665-1-0	Effluent Gross											3.08	mg/L	mg/L
KY0053431	Herrington Haven Subdivision	Garrard	001-1	06/30/2020	Phosphorus, total [as P]	00665-1-0	Effluent Gross	41								1.41	mg/L			mg/L
KY0053431	Herrington Haven Subdivision	Garrard	001-1	06/30/2020	Phosphorus, total [as P]	00665-1-0	Effluent Gross											1.41	mg/L	mg/L

KY0053431	Herrington Haven Subdivision	Garrard	001-1	03/31/2020	Phosphorus, total [as P]	00665-1-0	Effluent Gross	156								2.56	mg/L			mg/L
KY0053431	Herrington Haven Subdivision	Garrard	001-1	03/31/2020	Phosphorus, total [as P]	00665-1-0	Effluent Gross											2.56	mg/L	mg/L
KY0053431	Herrington Haven Subdivision	Garrard	001-1	12/31/2019	Phosphorus, total [as P]	00665-1-0	Effluent Gross									NODI V		NODI V		mg/L
KY0053431	Herrington Haven Subdivision	Garrard	001-1	09/30/2019	Phosphorus, total [as P]	00665-1-0	Effluent Gross	94								1.94	mg/L			mg/L
KY0053431	Herrington Haven Subdivision	Garrard	001-1	09/30/2019	Phosphorus, total [as P]	00665-1-0	Effluent Gross											1.94	mg/L	mg/L
KY0053431	Herrington Haven Subdivision	Garrard	001-1	06/30/2019	Phosphorus, total [as P]	00665-1-0	Effluent Gross	169								2.69	mg/L			mg/L
KY0053431	Herrington Haven Subdivision	Garrard	001-1	06/30/2019	Phosphorus, total [as P]	00665-1-0	Effluent Gross											2.69	mg/L	mg/L
KY0053431	Herrington Haven Subdivision	Garrard	001-1	03/31/2019	Phosphorus, total [as P]	00665-1-0	Effluent Gross	73								1.73	mg/L			mg/L
KY0053431	Herrington Haven Subdivision	Garrard	001-1	03/31/2019	Phosphorus, total [as P]	00665-1-0	Effluent Gross											1.73	mg/L	mg/L
KY0053431	Herrington Haven Subdivision	Garrard	001-1	12/31/2018	Phosphorus, total [as P]	00665-1-0	Effluent Gross									0.32	mg/L			mg/L
KY0053431	Herrington Haven Subdivision	Garrard	001-1	12/31/2018	Phosphorus, total [as P]	00665-1-0	Effluent Gross											0.32	mg/L	mg/L
KY0053431	Herrington Haven Subdivision	Garrard	001-1	09/30/2018	Phosphorus, total [as P]	00665-1-0	Effluent Gross									NODI V		NODI V		mg/L
KY0053431	Herrington Haven Subdivision	Garrard	001-1	06/30/2018	Phosphorus, total [as P]	00665-1-0	Effluent Gross									NODI F		NODI F		mg/L
KY0053431	Herrington Haven Subdivision	Garrard	001-1	03/31/2018	Phosphorus, total [as P]	00665-1-0	Effluent Gross									< .125	mg/L			mg/L
KY0053431	Herrington Haven Subdivision	Garrard	001-1	03/31/2018	Phosphorus, total [as P]	00665-1-0	Effluent Gross											< .125	mg/L	mg/L
KY0053431	Herrington Haven Subdivision	Garrard	001-1	12/31/2021	Flow, in conduit or thru	50050-1-0	Effluent Gross		0.105	MGD			MGD							
KY0053431	Herrington Haven Subdivision	Garrard	001-1	12/31/2021	Flow, in conduit or thru	50050-1-0	Effluent Gross				0.105	MGD	MGD							
KY0053431	Herrington Haven Subdivision	Garrard	001-1	09/30/2021	Flow, in conduit or thru	50050-1-0	Effluent Gross		0.191	MGD			MGD							
KY0053431	Herrington Haven Subdivision	Garrard	001-1	09/30/2021	Flow, in conduit or thru	50050-1-0	Effluent Gross				0.191	MGD	MGD							
KY0053431	Herrington Haven Subdivision	Garrard	001-1	06/30/2021	Flow, in conduit or thru	50050-1-0	Effluent Gross		0.032	MGD			MGD							
KY0053431	Herrington Haven Subdivision	Garrard	001-1	06/30/2021	Flow, in conduit or thru	50050-1-0	Effluent Gross				0.032	MGD	MGD							
KY0053431	Herrington Haven Subdivision	Garrard	001-1	03/31/2021	Flow, in conduit or thru	50050-1-0	Effluent Gross		0.001	MGD			MGD							
KY0053431	Herrington Haven Subdivision	Garrard	001-1	03/31/2021	Flow, in conduit or thru	50050-1-0	Effluent Gross				0.001	MGD	MGD							
KY0053431	Herrington Haven Subdivision	Garrard	001-1	12/31/2020	Flow, in conduit or thru	50050-1-0	Effluent Gross		0.00025	MGD			MGD							
KY0053431	Herrington Haven Subdivision	Garrard	001-1	12/31/2020	Flow, in conduit or thru	50050-1-0	Effluent Gross				0.00025	MGD	MGD							
KY0053431	Herrington Haven Subdivision	Garrard	001-1	09/30/2020	Flow, in conduit or thru	50050-1-0	Effluent Gross		0.0005	MGD			MGD							
KY0053431	Herrington Haven Subdivision	Garrard	001-1	09/30/2020	Flow, in conduit or thru	50050-1-0	Effluent Gross				0.0005	MGD	MGD							
KY0053431	Herrington Haven Subdivision	Garrard	001-1	06/30/2020	Flow, in conduit or thru	50050-1-0	Effluent Gross		0.00025	MGD			MGD							
KY0053431	Herrington Haven Subdivision	Garrard	001-1	06/30/2020	Flow, in conduit or thru	50050-1-0	Effluent Gross				0.00025	MGD	MGD							
KY0053431	Herrington Haven Subdivision	Garrard	001-1	03/31/2020	Flow, in conduit or thru	50050-1-0	Effluent Gross		0.00025	MGD			MGD							
KY0053431	Herrington Haven Subdivision	Garrard	001-1	03/31/2020	Flow, in conduit or thru	50050-1-0	Effluent Gross				0.00025	MGD	MGD							
KY0053431	Herrington Haven Subdivision	Garrard	001-1	12/31/2019	Flow, in conduit or thru	50050-1-0	Effluent Gross		NODI V				MGD							
KY0053431	Herrington Haven Subdivision	Garrard	001-1	09/30/2019	Flow, in conduit or thru	50050-1-0	Effluent Gross		0.0005	MGD			MGD							
KY0053431	Herrington Haven Subdivision	Garrard	001-1	09/30/2019	Flow, in conduit or thru	50050-1-0	Effluent Gross				0.0005	MGD	MGD							
KY0053431	Herrington Haven Subdivision	Garrard	001-1	06/30/2019	Flow, in conduit or thru	50050-1-0	Effluent Gross		0.0001	MGD			MGD							
KY0053431	Herrington Haven Subdivision	Garrard	001-1	06/30/2019	Flow, in conduit or thru	50050-1-0	Effluent Gross				0.001	MGD	MGD							
KY0053431	Herrington Haven Subdivision	Garrard	001-1	03/31/2019	Flow, in conduit or thru	50050-1-0	Effluent Gross		0.0002	MGD			MGD							
KY0053431	Herrington Haven Subdivision	Garrard	001-1	03/31/2019	Flow, in conduit or thru	50050-1-0	Effluent Gross				0.0002	MGD	MGD							
KY0053431	Herrington Haven Subdivision	Garrard	001-1	12/31/2018	Flow, in conduit or thru	50050-1-0	Effluent Gross		0.0005	MGD			MGD							
KY0053431	Herrington Haven Subdivision	Garrard	001-1	12/31/2018	Flow, in conduit or thru	50050-1-0	Effluent Gross				0.0005	MGD	MGD							
KY0053431	Herrington Haven Subdivision	Garrard	001-1	09/30/2018	Flow, in conduit or thru	50050-1-0	Effluent Gross		NODI V				MGD							
KY0053431	Herrington Haven Subdivision	Garrard	001-1	06/30/2018	Flow, in conduit or thru	50050-1-0	Effluent Gross		NODI F		NODI F		MGD							
KY0053431	Herrington Haven Subdivision	Garrard	001-1	03/31/2018	Flow, in conduit or thru	50050-1-0	Effluent Gross		0.0005	MGD			MGD							
KY0053431	Herrington Haven Subdivision	Garrard	001-1	03/31/2018	Flow, in conduit or thru	50050-1-0	Effluent Gross				0.0005	MGD	MGD							
KY0053431	Herrington Haven Subdivision	Garrard	001-1	12/31/2021	Chlorine, total residual	50060-1-0	Effluent Gross									0	mg/L			mg/L
KY0053431	Herrington Haven Subdivision	Garrard	001-1	09/30/2021	Chlorine, total residual	50060-1-0	Effluent Gross									< .01	mg/L			mg/L
KY0053431	Herrington Haven Subdivision	Garrard	001-1	09/30/2021	Chlorine, total residual	50060-1-0	Effluent Gross											< .01	mg/L	mg/L
KY0053431	Herrington Haven Subdivision	Garrard	001-1	06/30/2021	Chlorine, total residual	50060-1-0	Effluent Gross									< .01	mg/L			mg/L
KY0053431	Herrington Haven Subdivision	Garrard	001-1	06/30/2021	Chlorine, total residual	50060-1-0	Effluent Gross											< .01	mg/L	mg/L
KY0053431	Herrington Haven Subdivision	Garrard	001-1	03/31/2021	Chlorine, total residual	50060-1-0	Effluent Gross									< .01	mg/L			mg/L
KY0053431	Herrington Haven Subdivision	Garrard	001-1	03/31/2021	Chlorine, total residual	50060-1-0	Effluent Gross											< .01	mg/L	mg/L
KY0053431	Herrington Haven Subdivision	Garrard	001-1	12/31/2020	Chlorine, total residual	50060-1-0	Effluent Gross									< .01	mg/L			mg/L
KY0053431	Herrington Haven Subdivision	Garrard	001-1	12/31/2020	Chlorine, total residual	50060-1-0	Effluent Gross											< .01	mg/L	mg/L
KY0053431	Herrington Haven Subdivision	Garrard	001-1	09/30/2020	Chlorine, total residual	50060-1-0	Effluent Gross									< .01	mg/L			mg/L
KY0053431	Herrington Haven Subdivision	Garrard	001-1	09/30/2020	Chlorine, total residual	50060-1-0	Effluent Gross											< .01	mg/L	mg/L
KY0053431	Herrington Haven Subdivision	Garrard	001-1	06/30/2020	Chlorine, total residual	50060-1-0	Effluent Gross									< .01	mg/L			mg/L
KY0053431	Herrington Haven Subdivision	Garrard	001-1	06/30/2020	Chlorine, total residual	50060-1-0	Effluent Gross											< .01	mg/L	mg/L
KY0053431	Herrington Haven Subdivision	Garrard	001-1	03/31/2020	Chlorine, total residual	50060-1-0	Effluent Gross	8991								1	mg/L			mg/L
KY0053431	Herrington Haven Subdivision	Garrard	001-1	03/31/2020	Chlorine, total residual	50060-1-0	Effluent Gross	5163										1	mg/L	mg/L
KY0053431	Herrington Haven Subdivision	Garrard	001-1	12/31/2019	Chlorine, total residual	50060-1-0	Effluent Gross									NODI V		NODI V		mg/L
KY0053431	Herrington Haven Subdivision	Garrard	001-1	09/30/2019	Chlorine, total residual	50060-1-0	Effluent Gross									< .01	mg/L			mg/L
KY0053431	Herrington Haven Subdivision	Garrard	001-1	09/30/2019	Chlorine, total residual	50060-1-0	Effluent Gross											< .01	mg/L	mg/L
KY0053431	Herrington Haven Subdivision	Garrard	001-1	06/30/2019	Chlorine, total residual	50060-1-0	Effluent Gross									< .01	mg/L			mg/L
KY0053431	Herrington Haven Subdivision	Garrard	001-1	06/30/2019	Chlorine, total residual	50060-1-0	Effluent Gross											< .01	mg/L	mg/L
KY0053431	Herrington Haven Subdivision	Garrard	001-1	03/31/2019	Chlorine, total residual	50060-1-0	Effluent Gross	13536								1.5	mg/L			mg/L
KY0053431	Herrington Haven Subdivision	Garrard	001-1	03/31/2019	Chlorine, total residual	50060-1-0	Effluent Gross	7795										1.5	mg/L	mg/L
KY0053431	Herrington Haven Subdivision	Garrard	001-1	12/31/2018	Chlorine, total residual	50060-1-0	Effluent Gross									< .01	mg/L			mg/L
KY0053431	Herrington Haven Subdivision	Garrard	001-1	12/31/2018	Chlorine, total residual	50060-1-0	Effluent Gross											< .01	mg/L	mg/L
KY0053431	Herrington Haven Subdivision	Garrard	001-1	09/30/2018	Chlorine, total residual	50060-1-0	Effluent Gross									NODI V		NODI V		mg/L
KY0053431	Herrington Haven Subdivision	Garrard	001-1	06/30/2018	Chlorine, total residual	50060-1-0	Effluent Gross									NODI F		NODI F		mg/L
KY0053431	Herrington Haven Subdivision	Garrard	001-1	03/31/2018	Chlorine, total residual	50060-1-0	Effluent Gross									< .01	mg/L			mg/L
KY0053431	Herrington Haven Subdivision	Garrard	001-1	03/31/2018	Chlorine, total residual	50060-1-0	Effluent Gross											< .01	mg/L	mg/L
KY0053431	Herrington Haven Subdivision	Garrard	001-1	12/31/2021	E. coli	51040-1-0	Effluent Gross									1	#/100mL			#/100mL
KY0053431	Herrington Haven Subdivision	Garrard	001-1	12/31/2021	E. coli	51040-1-0	Effluent Gross											1	#/100mL	#/100mL
KY0053431	Herrington Haven Subdivision	Garrard	001-1	09/30/2021	E. coli	51040-1-0	Effluent Gross									1	#/100mL			#/100mL
KY0053431	Herrington Haven Subdivision	Garrard	001-1	09/30/2021	E. coli	51040-1-0	Effluent Gross											1	#/100mL	#/100mL
KY0053431	Herrington Haven Subdivision	Garrard	001-1	06/30/2021	E. coli	51040-1-0	Effluent Gross									12	#/100mL			#/100mL
KY0053431	Herrington Haven Subdivision	Garrard	001-1	06/30/2021	E. coli	51040-1-0	Effluent Gross											12	#/100mL	#/100mL
KY0053431	Herrington Haven Subdivision	Garrard	001-1	03/31/2021	E. coli	51040-1-0	Effluent Gross									< 1	#/100mL			#/100mL
KY0053431	Herrington Haven Subdivision	Garrard	001-1	03/31/2021	E. coli	51040-1-0	Effluent Gross											< 1	#/100mL	#/100mL
KY0053431	Herrington Haven Subdivision	Garrard	001-1	12/31/2020	E. coli	51040-1-0	Effluent Gross									3	#/100mL			#/100mL
KY0053431	Herrington Haven Subdivision	Garrard	001-1	12/31/2020	E. coli	51040-1-0	Effluent Gross											3	#/100mL	#/100mL
KY0053431	Herrington Haven Subdivision	Garrard	001-1	09/30/2020	E. coli	51040-1-0	Effluent Gross	12								145	#/100mL			#/100mL
KY0053431	Herrington Haven Subdivision	Garrard	001-1	09/30/2020	E. coli	51040-1-0	Effluent Gross											145	#/100mL	#/100mL
KY0053431	Herrington Haven Subdivision	Garrard	001-1	06/30/2020	E. coli	51040-1-0	Effluent Gross									< 1	#/100mL			#/100mL
KY0053431	Herrington Haven Subdivision	Garrard	001-1	06/30/2020	E. coli	51040-1-0	Effluent Gross											< 1	#/100mL	#/100mL
KY0053431	Herrington Haven Subdivision	Garrard	001-1	03/31/2020	E. coli	51040-1-0	Effluent Gross									< 1	#/100mL			#/100mL
KY0053431	Herrington Haven Subdivision	Garrard	001-1	03/31/2020	E. coli	51040-1-0	Effluent Gross											< 1	#/100mL	#/100mL
KY0053431	Herrington Haven Subdivision	Garrard	001-1	12/31/2019	E. coli	51040-1-0	Effluent Gross									NODI V		NODI V		#/100mL

KY0053431	Herrington Haven Subdivision	Garrard	001-1	09/30/2019	E. coli	51040-1-0	Effluent Gross	43								186	#/100mL			#/100mL
KY0053431	Herrington Haven Subdivision	Garrard	001-1	09/30/2019	E. coli	51040-1-0	Effluent Gross											186	#/100mL	#/100mL
KY0053431	Herrington Haven Subdivision	Garrard	001-1	06/30/2019	E. coli	51040-1-0	Effluent Gross									< 1	#/100mL			#/100mL
KY0053431	Herrington Haven Subdivision	Garrard	001-1	06/30/2019	E. coli	51040-1-0	Effluent Gross											< 1	#/100mL	#/100mL
KY0053431	Herrington Haven Subdivision	Garrard	001-1	03/31/2019	E. coli	51040-1-0	Effluent Gross									< 1	#/100mL			#/100mL
KY0053431	Herrington Haven Subdivision	Garrard	001-1	03/31/2019	E. coli	51040-1-0	Effluent Gross											< 1	#/100mL	#/100mL
KY0053431	Herrington Haven Subdivision	Garrard	001-1	12/31/2018	E. coli	51040-1-0	Effluent Gross									< 1	#/100mL			#/100mL
KY0053431	Herrington Haven Subdivision	Garrard	001-1	12/31/2018	E. coli	51040-1-0	Effluent Gross											< 1	#/100mL	#/100mL
KY0053431	Herrington Haven Subdivision	Garrard	001-1	09/30/2018	E. coli	51040-1-0	Effluent Gross									NODI V		NODI V		#/100mL
KY0053431	Herrington Haven Subdivision	Garrard	001-1	06/30/2018	E. coli	51040-1-0	Effluent Gross									NODI F		NODI F		#/100mL
KY0053431	Herrington Haven Subdivision	Garrard	001-1	03/31/2018	E. coli	51040-1-0	Effluent Gross									< 1	#/100mL			#/100mL
KY0053431	Herrington Haven Subdivision	Garrard	001-1	03/31/2018	E. coli	51040-1-0	Effluent Gross											< 1	#/100mL	#/100mL

NPDES ID	Permit Name	County Name	Perm Feature ID-Limit Set	Mon. Period End Date	Parameter Desc	Param Cd - MLC - Season ID	Monitoring Location Desc	Worst % exced.	Quantity 1	Q1 DMR Value Unit Short Desc	Quantity 2	Q2 DMR Value Unit Short Desc	Limit Value - Quantity Units	Concentration 1	C1 DMR Value Unit Short Desc	Concentration 2	C2 DMR Value Unit Short Desc	Concentration 3	C3 DMR Value Unit Short Desc	Limit Value - Concentration Units
KY0053431	Herrington Haven Subdivision	Garrard	001-2	03/31/2022	Oxygen, dissolved [DO]	00300-1-0	Effluent Gross							9.2	mg/L					mg/L
KY0053431	Herrington Haven Subdivision	Garrard	001-2	03/31/2022	BOD, 5-day, 20 deg. C	00310-1-0	Effluent Gross									4	mg/L			mg/L
KY0053431	Herrington Haven Subdivision	Garrard	001-2	03/31/2022	BOD, 5-day, 20 deg. C	00310-1-0	Effluent Gross											4	mg/L	mg/L
KY0053431	Herrington Haven Subdivision	Garrard	001-2	03/31/2022	pH	00400-1-0	Effluent Gross							6.73	SU					SU
KY0053431	Herrington Haven Subdivision	Garrard	001-2	03/31/2022	pH	00400-1-0	Effluent Gross											6.73	SU	SU
KY0053431	Herrington Haven Subdivision	Garrard	001-2	03/31/2022	Solids, total suspended	00530-1-0	Effluent Gross									26	mg/L			mg/L
KY0053431	Herrington Haven Subdivision	Garrard	001-2	03/31/2022	Solids, total suspended	00530-1-0	Effluent Gross											26	mg/L	mg/L
KY0053431	Herrington Haven Subdivision	Garrard	001-2	03/31/2022	Nitrogen, total [as N]	00600-1-0	Effluent Gross									44.98	mg/L			mg/L
KY0053431	Herrington Haven Subdivision	Garrard	001-2	03/31/2022	Nitrogen, total [as N]	00600-1-0	Effluent Gross											44.98	mg/L	mg/L
KY0053431	Herrington Haven Subdivision	Garrard	001-2	03/31/2022	Nitrogen, ammonia total [as	00610-1-0	Effluent Gross									0.15	mg/L			mg/L
KY0053431	Herrington Haven Subdivision	Garrard	001-2	03/31/2022	Nitrogen, ammonia total [as	00610-1-0	Effluent Gross											0.15	mg/L	mg/L
KY0053431	Herrington Haven Subdivision	Garrard	001-2	03/31/2022	Phosphorus, total [as P]	00665-1-0	Effluent Gross									7.7	mg/L			mg/L
KY0053431	Herrington Haven Subdivision	Garrard	001-2	03/31/2022	Phosphorus, total [as P]	00665-1-0	Effluent Gross											7.7	mg/L	mg/L
KY0053431	Herrington Haven Subdivision	Garrard	001-2	03/31/2022	Flow, in conduit or thru	50050-1-0	Effluent Gross		<= .05	MGD			MGD							
KY0053431	Herrington Haven Subdivision	Garrard	001-2	03/31/2022	Flow, in conduit or thru	50050-1-0	Effluent Gross				<= .0016	MGD	MGD							
KY0053431	Herrington Haven Subdivision	Garrard	001-2	03/31/2022	Chlorine, total residual	50060-1-0	Effluent Gross									0	mg/L			mg/L
KY0053431	Herrington Haven Subdivision	Garrard	001-2	03/31/2022	Chlorine, total residual	50060-1-0	Effluent Gross											0	mg/L	mg/L
KY0053431	Herrington Haven Subdivision	Garrard	001-2	03/31/2022	E. coli	51040-1-0	Effluent Gross									1	#/100mL			#/100mL
KY0053431	Herrington Haven Subdivision	Garrard	001-2	03/31/2022	E. coli	51040-1-0	Effluent Gross											1	#/100mL	#/100mL

Effluent Vio. Exists	Non-Receipt Vio. Exists	DMR Received Date
N	N	1/21/2022
N	N	10/22/2021
N	N	7/22/2021
N	N	4/27/2021
N	N	1/27/2021
N	N	10/26/2020
N	N	7/27/2020
N	N	4/25/2020
N	N	1/19/2020
N	N	10/27/2019
N	N	7/25/2019
N	N	4/25/2019
N	N	1/24/2019
N	N	11/5/2018
N	N	7/25/2018
N	N	4/29/2018
N	N	1/21/2022
N	N	1/21/2022
N	N	1/21/2022
N	N	1/21/2022
N	N	10/22/2021
N	N	10/22/2021
N	N	10/22/2021
N	N	10/22/2021
N	N	7/22/2021
N	N	7/22/2021
N	N	7/22/2021
N	N	7/22/2021
N	N	4/27/2021
N	N	4/27/2021
N	N	4/27/2021
N	N	4/27/2021
N	N	1/27/2021
N	N	1/27/2021
N	N	1/27/2021
N	N	1/27/2021
N	N	10/26/2020
N	N	10/26/2020
N	N	10/26/2020
N	N	10/26/2020
N	N	10/26/2020
N	N	7/27/2020
N	N	7/27/2020
N	N	7/27/2020
N	N	7/27/2020
N	N	4/25/2020
N	N	4/25/2020
N	N	4/25/2020
N	N	4/25/2020
N	N	1/19/2020
N	N	1/19/2020
N	N	10/27/2019
N	N	10/27/2019
N	N	10/27/2019
N	N	10/27/2019
N	N	7/25/2019
N	N	7/25/2019
N	N	7/25/2019
N	N	7/25/2019
N	N	4/25/2019
N	N	4/25/2019
N	N	4/25/2019
N	N	4/25/2019
N	N	1/24/2019
N	N	1/24/2019
N	N	1/24/2019
N	N	1/24/2019
N	N	11/5/2018
N	N	11/5/2018
N	N	7/25/2018
N	N	7/25/2018
N	N	4/29/2018
N	N	4/29/2018
N	N	4/29/2018
N	N	4/29/2018
N	N	1/21/2022
N	N	1/21/2022
N	N	10/22/2021
N	N	10/22/2021
N	N	7/22/2021
N	N	7/22/2021
N	N	4/27/2021
N	N	4/27/2021

N	N	1/27/2021
N	N	1/27/2021
N	N	10/26/2020
N	N	10/26/2020
N	N	7/27/2020
N	N	7/27/2020
N	N	4/25/2020
N	N	4/25/2020
N	N	1/19/2020
N	N	10/27/2019
N	N	10/27/2019
N	N	7/25/2019
N	N	7/25/2019
N	N	4/25/2019
N	N	4/25/2019
N	N	1/24/2019
N	N	1/24/2019
N	N	11/5/2018
N	N	7/25/2018
N	N	4/29/2018
N	N	4/29/2018
Y	N	1/21/2022
Y	N	1/21/2022
N	N	1/21/2022
N	N	1/21/2022
Y	N	10/22/2021
Y	N	10/22/2021
N	N	10/22/2021
N	N	10/22/2021
Y	N	7/22/2021
Y	N	7/22/2021
N	N	7/22/2021
N	N	7/22/2021
N	N	4/27/2021
N	N	4/27/2021
N	N	4/27/2021
N	N	4/27/2021
N	N	1/27/2021
N	N	1/27/2021
N	N	1/27/2021
N	N	1/27/2021
N	N	10/26/2020
N	N	10/26/2020
N	N	10/26/2020
N	N	10/26/2020
N	N	7/27/2020
N	N	7/27/2020
N	N	7/27/2020
N	N	7/27/2020
N	N	7/27/2020
N	N	4/25/2020
N	N	4/25/2020
N	N	4/25/2020
N	N	4/25/2020
N	N	1/19/2020
N	N	1/19/2020
N	N	10/27/2019
N	N	10/27/2019
N	N	10/27/2019
N	N	10/27/2019
N	N	7/25/2019
N	N	7/25/2019
N	N	7/25/2019
N	N	7/25/2019
N	N	4/25/2019
N	N	4/25/2019
N	N	4/25/2019
N	N	4/25/2019
N	N	1/24/2019
N	N	1/24/2019
N	N	1/24/2019
N	N	1/24/2019
N	N	11/5/2018
N	N	11/5/2018
N	N	7/25/2018
N	N	7/25/2018
N	N	4/29/2018
N	N	4/29/2018
N	N	4/29/2018
N	N	4/29/2018
N	N	1/21/2022
N	N	1/21/2022
N	N	10/22/2021
N	N	10/22/2021
N	N	7/22/2021
N	N	7/22/2021
N	N	4/27/2021
N	N	4/27/2021
N	N	1/27/2021
N	N	1/27/2021
N	N	10/26/2020

N	N	10/26/2020
N	N	7/27/2020
N	N	7/27/2020
N	N	4/25/2020
N	N	4/25/2020
N	N	1/19/2020
N	N	10/27/2019
N	N	10/27/2019
N	N	7/25/2019
N	N	7/25/2019
N	N	4/25/2019
N	N	4/25/2019
N	N	1/24/2019
N	N	1/24/2019
N	N	11/5/2018
N	N	7/25/2018
N	N	4/29/2018
N	N	4/29/2018
N	N	1/21/2022
N	N	1/21/2022
N	N	1/21/2022
N	N	1/21/2022
Y	N	10/22/2021
Y	N	10/22/2021
N	N	10/22/2021
N	N	10/22/2021
Y	N	7/22/2021
Y	N	7/22/2021
N	N	7/22/2021
N	N	7/22/2021
Y	N	4/27/2021
N	N	4/27/2021
N	N	4/27/2021
N	N	4/27/2021
N	N	1/27/2021
N	N	1/27/2021
N	N	1/27/2021
N	N	1/27/2021
N	N	10/26/2020
N	N	10/26/2020
N	N	10/26/2020
N	N	10/26/2020
N	N	7/27/2020
N	N	7/27/2020
N	N	7/27/2020
N	N	7/27/2020
N	N	4/25/2020
N	N	7/27/2020
N	N	7/27/2020
N	N	4/25/2020
N	N	4/25/2020
N	N	4/25/2020
N	N	4/25/2020
N	N	1/19/2020
N	N	1/19/2020
N	N	10/27/2019
N	N	10/27/2019
N	N	10/27/2019
N	N	10/27/2019
N	N	7/25/2019
N	N	7/25/2019
N	N	7/25/2019
N	N	7/25/2019
N	N	4/25/2019
N	N	4/25/2019
N	N	4/25/2019
N	N	4/25/2019
N	N	1/24/2019
N	N	1/24/2019
N	N	1/24/2019
N	N	1/24/2019
N	N	11/5/2018
N	N	11/5/2018
N	N	7/25/2018
N	N	7/25/2018
N	N	4/29/2018
N	N	4/29/2018
N	N	4/29/2018
N	N	4/29/2018
Y	N	1/21/2022
N	N	1/21/2022
Y	N	10/22/2021
N	N	10/22/2021
Y	N	7/22/2021
N	N	7/22/2021
Y	N	4/27/2021
N	N	4/27/2021
Y	N	1/27/2021
N	N	1/27/2021
Y	N	10/26/2020
N	N	10/26/2020
Y	N	7/27/2020
N	N	7/27/2020

Y	N	4/25/2020
N	N	4/25/2020
N	N	1/19/2020
Y	N	10/27/2019
N	N	10/27/2019
Y	N	7/25/2019
N	N	7/25/2019
Y	N	4/25/2019
N	N	4/25/2019
N	N	1/24/2019
N	N	1/24/2019
N	N	11/5/2018
N	N	7/25/2018
N	N	4/29/2018
N	N	4/29/2018
N	N	1/21/2022
N	N	1/21/2022
N	N	10/22/2021
N	N	10/22/2021
N	N	7/22/2021
N	N	7/22/2021
N	N	4/27/2021
N	N	4/27/2021
N	N	1/27/2021
N	N	1/27/2021
N	N	10/26/2020
N	N	10/26/2020
N	N	7/27/2020
N	N	7/27/2020
N	N	4/25/2020
N	N	4/25/2020
N	N	1/19/2020
N	N	10/27/2019
N	N	10/27/2019
N	N	7/25/2019
N	N	7/25/2019
N	N	4/25/2019
N	N	4/25/2019
N	N	1/24/2019
N	N	1/24/2019
N	N	11/5/2018
N	N	7/25/2018
N	N	4/29/2018
N	N	4/29/2018
N	N	1/21/2022
N	N	1/21/2022
N	N	10/22/2021
N	N	10/22/2021
N	N	7/22/2021
N	N	7/22/2021
N	N	4/27/2021
N	N	4/27/2021
N	N	1/27/2021
N	N	1/27/2021
Y	N	10/26/2020
N	N	10/26/2020
N	N	7/27/2020
N	N	7/27/2020
N	N	4/25/2020
N	N	4/25/2020
N	N	1/19/2020

Y	N	10/27/2019
N	N	10/27/2019
N	N	7/25/2019
N	N	7/25/2019
N	N	4/25/2019
N	N	4/25/2019
N	N	1/24/2019
N	N	1/24/2019
N	N	11/5/2018
N	N	7/25/2018
N	N	4/29/2018
N	N	4/29/2018

Effluent Vio. Exists	Non-Receipt Vio. Exists	DMR Received Date
N	N	4/18/2022
N	N	4/18/2022
N	N	4/18/2022
N	N	4/18/2022
N	N	4/18/2022
N	N	4/18/2022
N	N	4/18/2022
N	N	4/18/2022
N	N	4/18/2022
N	N	4/18/2022
N	N	4/18/2022
N	N	4/18/2022
N	N	4/18/2022
N	N	4/18/2022
N	N	4/18/2022
N	N	4/18/2022
N	N	4/18/2022
N	N	4/18/2022
N	N	4/18/2022
N	N	4/18/2022

NPDES ID	Permit Name	Latitude in DMS	Longitude in DMS	Latitude in Decima	Longitude in Decim
KY0053431	Herrington Haven S	+ 37 39' 41" 0	- 84 41' 23" 0	37.661389	-84.689722
KY0053431	Herrington Haven S	+ 37 39' 41" 0	- 84 41' 23" 0	37.661389	-84.689722
KY0053431	Herrington Haven S	+ 37 39' 41" 0	- 84 41' 23" 0	37.661389	-84.689722
KY0053431	Herrington Haven S	+ 37 39' 41" 0	- 84 41' 23" 0	37.661389	-84.689722
KY0053431	Herrington Haven S	+ 37 39' 41" 0	- 84 41' 23" 0	37.661389	-84.689722
KY0053431	Herrington Haven S	+ 37 39' 41" 0	- 84 41' 23" 0	37.661389	-84.689722
KY0053431	Herrington Haven S	+ 37 39' 41" 0	- 84 41' 23" 0	37.661389	-84.689722
KY0053431	Herrington Haven S	+ 37 39' 41" 0	- 84 41' 23" 0	37.661389	-84.689722
KY0053431	Herrington Haven S	+ 37 39' 41" 0	- 84 41' 23" 0	37.661389	-84.689722
KY0053431	Herrington Haven S	+ 37 39' 41" 0	- 84 41' 23" 0	37.661389	-84.689722
KY0053431	Herrington Haven S	+ 37 39' 41" 0	- 84 41' 23" 0	37.661389	-84.689722
KY0053431	Herrington Haven S	+ 37 39' 41" 0	- 84 41' 23" 0	37.661389	-84.689722
KY0053431	Herrington Haven S	+ 37 39' 41" 0	- 84 41' 23" 0	37.661389	-84.689722
KY0053431	Herrington Haven S	+ 37 39' 41" 0	- 84 41' 23" 0	37.661389	-84.689722
KY0053431	Herrington Haven S	+ 37 39' 41" 0	- 84 41' 23" 0	37.661389	-84.689722
KY0053431	Herrington Haven S	+ 37 39' 41" 0	- 84 41' 23" 0	37.661389	-84.689722
KY0053431	Herrington Haven S	+ 37 39' 41" 0	- 84 41' 23" 0	37.661389	-84.689722
KY0053431	Herrington Haven S	+ 37 39' 41" 0	- 84 41' 23" 0	37.661389	-84.689722
KY0053431	Herrington Haven S	+ 37 39' 41" 0	- 84 41' 23" 0	37.661389	-84.689722
KY0053431	Herrington Haven S	+ 37 39' 41" 0	- 84 41' 23" 0	37.661389	-84.689722
KY0053431	Herrington Haven S	+ 37 39' 41" 0	- 84 41' 23" 0	37.661389	-84.689722
KY0053431	Herrington Haven S	+ 37 39' 41" 0	- 84 41' 23" 0	37.661389	-84.689722
KY0053431	Herrington Haven S	+ 37 39' 41" 0	- 84 41' 23" 0	37.661389	-84.689722
KY0053431	Herrington Haven S	+ 37 39' 41" 0	- 84 41' 23" 0	37.661389	-84.689722
KY0053431	Herrington Haven S	+ 37 39' 41" 0	- 84 41' 23" 0	37.661389	-84.689722
KY0053431	Herrington Haven S	+ 37 39' 41" 0	- 84 41' 23" 0	37.661389	-84.689722
KY0053431	Herrington Haven S	+ 37 39' 41" 0	- 84 41' 23" 0	37.661389	-84.689722
KY0053431	Herrington Haven S	+ 37 39' 41" 0	- 84 41' 23" 0	37.661389	-84.689722
KY0053431	Herrington Haven S	+ 37 39' 41" 0	- 84 41' 23" 0	37.661389	-84.689722
KY0053431	Herrington Haven S	+ 37 39' 41" 0	- 84 41' 23" 0	37.661389	-84.689722
KY0053431	Herrington Haven S	+ 37 39' 41" 0	- 84 41' 23" 0	37.661389	-84.689722
KY0053431	Herrington Haven S	+ 37 39' 41" 0	- 84 41' 23" 0	37.661389	-84.689722
KY0053431	Herrington Haven S	+ 37 39' 41" 0	- 84 41' 23" 0	37.661389	-84.689722
KY0053431	Herrington Haven S	+ 37 39' 41" 0	- 84 41' 23" 0	37.661389	-84.689722
KY0053431	Herrington Haven S	+ 37 39' 41" 0	- 84 41' 23" 0	37.661389	-84.689722
KY0053431	Herrington Haven S	+ 37 39' 41" 0	- 84 41' 23" 0	37.661389	-84.689722
KY0053431	Herrington Haven S	+ 37 39' 41" 0	- 84 41' 23" 0	37.661389	-84.689722
KY0053431	Herrington Haven S	+ 37 39' 41" 0	- 84 41' 23" 0	37.661389	-84.689722
KY0053431	Herrington Haven S	+ 37 39' 41" 0	- 84 41' 23" 0	37.661389	-84.689722
KY0053431	Herrington Haven S	+ 37 39' 41" 0	- 84 41' 23" 0	37.661389	-84.689722

KY0053431	Herrington Haven S	+ 37 39' 41" 0	- 84 41' 23" 0	37.661389	-84.689722
KY0053431	Herrington Haven S	+ 37 39' 41" 0	- 84 41' 23" 0	37.661389	-84.689722
KY0053431	Herrington Haven S	+ 37 39' 41" 0	- 84 41' 23" 0	37.661389	-84.689722
KY0053431	Herrington Haven S	+ 37 39' 41" 0	- 84 41' 23" 0	37.661389	-84.689722
KY0053431	Herrington Haven S	+ 37 39' 41" 0	- 84 41' 23" 0	37.661389	-84.689722
KY0053431	Herrington Haven S	+ 37 39' 41" 0	- 84 41' 23" 0	37.661389	-84.689722
KY0053431	Herrington Haven S	+ 37 39' 41" 0	- 84 41' 23" 0	37.661389	-84.689722
KY0053431	Herrington Haven S	+ 37 39' 41" 0	- 84 41' 23" 0	37.661389	-84.689722
KY0053431	Herrington Haven S	+ 37 39' 41" 0	- 84 41' 23" 0	37.661389	-84.689722
KY0053431	Herrington Haven S	+ 37 39' 41" 0	- 84 41' 23" 0	37.661389	-84.689722
KY0053431	Herrington Haven S	+ 37 39' 41" 0	- 84 41' 23" 0	37.661389	-84.689722
KY0053431	Herrington Haven S	+ 37 39' 41" 0	- 84 41' 23" 0	37.661389	-84.689722
KY0053431	Herrington Haven S	+ 37 39' 41" 0	- 84 41' 23" 0	37.661389	-84.689722
KY0053431	Herrington Haven S	+ 37 39' 41" 0	- 84 41' 23" 0	37.661389	-84.689722
KY0053431	Herrington Haven S	+ 37 39' 41" 0	- 84 41' 23" 0	37.661389	-84.689722
KY0053431	Herrington Haven S	+ 37 39' 41" 0	- 84 41' 23" 0	37.661389	-84.689722
KY0053431	Herrington Haven S	+ 37 39' 41" 0	- 84 41' 23" 0	37.661389	-84.689722
KY0053431	Herrington Haven S	+ 37 39' 41" 0	- 84 41' 23" 0	37.661389	-84.689722
KY0053431	Herrington Haven S	+ 37 39' 41" 0	- 84 41' 23" 0	37.661389	-84.689722
KY0053431	Herrington Haven S	+ 37 39' 41" 0	- 84 41' 23" 0	37.661389	-84.689722
KY0053431	Herrington Haven S	+ 37 39' 41" 0	- 84 41' 23" 0	37.661389	-84.689722
KY0053431	Herrington Haven S	+ 37 39' 41" 0	- 84 41' 23" 0	37.661389	-84.689722
KY0053431	Herrington Haven S	+ 37 39' 41" 0	- 84 41' 23" 0	37.661389	-84.689722
KY0053431	Herrington Haven S	+ 37 39' 41" 0	- 84 41' 23" 0	37.661389	-84.689722
KY0053431	Herrington Haven S	+ 37 39' 41" 0	- 84 41' 23" 0	37.661389	-84.689722
KY0053431	Herrington Haven S	+ 37 39' 41" 0	- 84 41' 23" 0	37.661389	-84.689722
KY0053431	Herrington Haven S	+ 37 39' 41" 0	- 84 41' 23" 0	37.661389	-84.689722
KY0053431	Herrington Haven S	+ 37 39' 41" 0	- 84 41' 23" 0	37.661389	-84.689722
KY0053431	Herrington Haven S	+ 37 39' 41" 0	- 84 41' 23" 0	37.661389	-84.689722
KY0053431	Herrington Haven S	+ 37 39' 41" 0	- 84 41' 23" 0	37.661389	-84.689722
KY0053431	Herrington Haven S	+ 37 39' 41" 0	- 84 41' 23" 0	37.661389	-84.689722
KY0053431	Herrington Haven S	+ 37 39' 41" 0	- 84 41' 23" 0	37.661389	-84.689722
KY0053431	Herrington Haven S	+ 37 39' 41" 0	- 84 41' 23" 0	37.661389	-84.689722
KY0053431	Herrington Haven S	+ 37 39' 41" 0	- 84 41' 23" 0	37.661389	-84.689722
KY0053431	Herrington Haven S	+ 37 39' 41" 0	- 84 41' 23" 0	37.661389	-84.689722
KY0053431	Herrington Haven S	+ 37 39' 41" 0	- 84 41' 23" 0	37.661389	-84.689722
KY0053431	Herrington Haven S	+ 37 39' 41" 0	- 84 41' 23" 0	37.661389	-84.689722
KY0053431	Herrington Haven S	+ 37 39' 41" 0	- 84 41' 23" 0	37.661389	-84.689722
KY0053431	Herrington Haven S	+ 37 39' 41" 0	- 84 41' 23" 0	37.661389	-84.689722
KY0053431	Herrington Haven S	+ 37 39' 41" 0	- 84 41' 23" 0	37.661389	-84.689722
KY0053431	Herrington Haven S	+ 37 39' 41" 0	- 84 41' 23" 0	37.661389	-84.689722
KY0053431	Herrington Haven S	+ 37 39' 41" 0	- 84 41' 23" 0	37.661389	-84.689722

KY0053431	Herrington Haven S	+ 37 39' 41" 0	- 84 41' 23" 0	37.661389	-84.689722
KY0053431	Herrington Haven S	+ 37 39' 41" 0	- 84 41' 23" 0	37.661389	-84.689722
KY0053431	Herrington Haven S	+ 37 39' 41" 0	- 84 41' 23" 0	37.661389	-84.689722
KY0053431	Herrington Haven S	+ 37 39' 41" 0	- 84 41' 23" 0	37.661389	-84.689722
KY0053431	Herrington Haven S	+ 37 39' 41" 0	- 84 41' 23" 0	37.661389	-84.689722
KY0053431	Herrington Haven S	+ 37 39' 41" 0	- 84 41' 23" 0	37.661389	-84.689722
KY0053431	Herrington Haven S	+ 37 39' 41" 0	- 84 41' 23" 0	37.661389	-84.689722
KY0053431	Herrington Haven S	+ 37 39' 41" 0	- 84 41' 23" 0	37.661389	-84.689722
KY0053431	Herrington Haven S	+ 37 39' 41" 0	- 84 41' 23" 0	37.661389	-84.689722
KY0053431	Herrington Haven S	+ 37 39' 41" 0	- 84 41' 23" 0	37.661389	-84.689722
KY0053431	Herrington Haven S	+ 37 39' 41" 0	- 84 41' 23" 0	37.661389	-84.689722
KY0053431	Herrington Haven S	+ 37 39' 41" 0	- 84 41' 23" 0	37.661389	-84.689722
KY0053431	Herrington Haven S	+ 37 39' 41" 0	- 84 41' 23" 0	37.661389	-84.689722
KY0053431	Herrington Haven S	+ 37 39' 41" 0	- 84 41' 23" 0	37.661389	-84.689722
KY0053431	Herrington Haven S	+ 37 39' 41" 0	- 84 41' 23" 0	37.661389	-84.689722
KY0053431	Herrington Haven S	+ 37 39' 41" 0	- 84 41' 23" 0	37.661389	-84.689722
KY0053431	Herrington Haven S	+ 37 39' 41" 0	- 84 41' 23" 0	37.661389	-84.689722
KY0053431	Herrington Haven S	+ 37 39' 41" 0	- 84 41' 23" 0	37.661389	-84.689722
KY0053431	Herrington Haven S	+ 37 39' 41" 0	- 84 41' 23" 0	37.661389	-84.689722
KY0053431	Herrington Haven S	+ 37 39' 41" 0	- 84 41' 23" 0	37.661389	-84.689722
KY0053431	Herrington Haven S	+ 37 39' 41" 0	- 84 41' 23" 0	37.661389	-84.689722
KY0053431	Herrington Haven S	+ 37 39' 41" 0	- 84 41' 23" 0	37.661389	-84.689722
KY0053431	Herrington Haven S	+ 37 39' 41" 0	- 84 41' 23" 0	37.661389	-84.689722
KY0053431	Herrington Haven S	+ 37 39' 41" 0	- 84 41' 23" 0	37.661389	-84.689722
KY0053431	Herrington Haven S	+ 37 39' 41" 0	- 84 41' 23" 0	37.661389	-84.689722
KY0053431	Herrington Haven S	+ 37 39' 41" 0	- 84 41' 23" 0	37.661389	-84.689722
KY0053431	Herrington Haven S	+ 37 39' 41" 0	- 84 41' 23" 0	37.661389	-84.689722
KY0053431	Herrington Haven S	+ 37 39' 41" 0	- 84 41' 23" 0	37.661389	-84.689722
KY0053431	Herrington Haven S	+ 37 39' 41" 0	- 84 41' 23" 0	37.661389	-84.689722
KY0053431	Herrington Haven S	+ 37 39' 41" 0	- 84 41' 23" 0	37.661389	-84.689722
KY0053431	Herrington Haven S	+ 37 39' 41" 0	- 84 41' 23" 0	37.661389	-84.689722
KY0053431	Herrington Haven S	+ 37 39' 41" 0	- 84 41' 23" 0	37.661389	-84.689722
KY0053431	Herrington Haven S	+ 37 39' 41" 0	- 84 41' 23" 0	37.661389	-84.689722
KY0053431	Herrington Haven S	+ 37 39' 41" 0	- 84 41' 23" 0	37.661389	-84.689722
KY0053431	Herrington Haven S	+ 37 39' 41" 0	- 84 41' 23" 0	37.661389	-84.689722
KY0053431	Herrington Haven S	+ 37 39' 41" 0	- 84 41' 23" 0	37.661389	-84.689722
KY0053431	Herrington Haven S	+ 37 39' 41" 0	- 84 41' 23" 0	37.661389	-84.689722
KY0053431	Herrington Haven S	+ 37 39' 41" 0	- 84 41' 23" 0	37.661389	-84.689722
KY0053431	Herrington Haven S	+ 37 39' 41" 0	- 84 41' 23" 0	37.661389	-84.689722
KY0053431	Herrington Haven S	+ 37 39' 41" 0	- 84 41' 23" 0	37.661389	-84.689722
KY0053431	Herrington Haven S	+ 37 39' 41" 0	- 84 41' 23" 0	37.661389	-84.689722

KY0053431	Herrington Haven S	+ 37 39' 41" 0	- 84 41' 23" 0	37.661389	-84.689722
KY0053431	Herrington Haven S	+ 37 39' 41" 0	- 84 41' 23" 0	37.661389	-84.689722
KY0053431	Herrington Haven S	+ 37 39' 41" 0	- 84 41' 23" 0	37.661389	-84.689722
KY0053431	Herrington Haven S	+ 37 39' 41" 0	- 84 41' 23" 0	37.661389	-84.689722
KY0053431	Herrington Haven S	+ 37 39' 41" 0	- 84 41' 23" 0	37.661389	-84.689722
KY0053431	Herrington Haven S	+ 37 39' 41" 0	- 84 41' 23" 0	37.661389	-84.689722
KY0053431	Herrington Haven S	+ 37 39' 41" 0	- 84 41' 23" 0	37.661389	-84.689722
KY0053431	Herrington Haven S	+ 37 39' 41" 0	- 84 41' 23" 0	37.661389	-84.689722
KY0053431	Herrington Haven S	+ 37 39' 41" 0	- 84 41' 23" 0	37.661389	-84.689722
KY0053431	Herrington Haven S	+ 37 39' 41" 0	- 84 41' 23" 0	37.661389	-84.689722
KY0053431	Herrington Haven S	+ 37 39' 41" 0	- 84 41' 23" 0	37.661389	-84.689722
KY0053431	Herrington Haven S	+ 37 39' 41" 0	- 84 41' 23" 0	37.661389	-84.689722
KY0053431	Herrington Haven S	+ 37 39' 41" 0	- 84 41' 23" 0	37.661389	-84.689722
KY0053431	Herrington Haven S	+ 37 39' 41" 0	- 84 41' 23" 0	37.661389	-84.689722
KY0053431	Herrington Haven S	+ 37 39' 41" 0	- 84 41' 23" 0	37.661389	-84.689722
KY0053431	Herrington Haven S	+ 37 39' 41" 0	- 84 41' 23" 0	37.661389	-84.689722
KY0053431	Herrington Haven S	+ 37 39' 41" 0	- 84 41' 23" 0	37.661389	-84.689722
KY0053431	Herrington Haven S	+ 37 39' 41" 0	- 84 41' 23" 0	37.661389	-84.689722
KY0053431	Herrington Haven S	+ 37 39' 41" 0	- 84 41' 23" 0	37.661389	-84.689722
KY0053431	Herrington Haven S	+ 37 39' 41" 0	- 84 41' 23" 0	37.661389	-84.689722
KY0053431	Herrington Haven S	+ 37 39' 41" 0	- 84 41' 23" 0	37.661389	-84.689722
KY0053431	Herrington Haven S	+ 37 39' 41" 0	- 84 41' 23" 0	37.661389	-84.689722
KY0053431	Herrington Haven S	+ 37 39' 41" 0	- 84 41' 23" 0	37.661389	-84.689722
KY0053431	Herrington Haven S	+ 37 39' 41" 0	- 84 41' 23" 0	37.661389	-84.689722
KY0053431	Herrington Haven S	+ 37 39' 41" 0	- 84 41' 23" 0	37.661389	-84.689722
KY0053431	Herrington Haven S	+ 37 39' 41" 0	- 84 41' 23" 0	37.661389	-84.689722
KY0053431	Herrington Haven S	+ 37 39' 41" 0	- 84 41' 23" 0	37.661389	-84.689722
KY0053431	Herrington Haven S	+ 37 39' 41" 0	- 84 41' 23" 0	37.661389	-84.689722
KY0053431	Herrington Haven S	+ 37 39' 41" 0	- 84 41' 23" 0	37.661389	-84.689722
KY0053431	Herrington Haven S	+ 37 39' 41" 0	- 84 41' 23" 0	37.661389	-84.689722
KY0053431	Herrington Haven S	+ 37 39' 41" 0	- 84 41' 23" 0	37.661389	-84.689722
KY0053431	Herrington Haven S	+ 37 39' 41" 0	- 84 41' 23" 0	37.661389	-84.689722
KY0053431	Herrington Haven S	+ 37 39' 41" 0	- 84 41' 23" 0	37.661389	-84.689722
KY0053431	Herrington Haven S	+ 37 39' 41" 0	- 84 41' 23" 0	37.661389	-84.689722
KY0053431	Herrington Haven S	+ 37 39' 41" 0	- 84 41' 23" 0	37.661389	-84.689722
KY0053431	Herrington Haven S	+ 37 39' 41" 0	- 84 41' 23" 0	37.661389	-84.689722
KY0053431	Herrington Haven S	+ 37 39' 41" 0	- 84 41' 23" 0	37.661389	-84.689722
KY0053431	Herrington Haven S	+ 37 39' 41" 0	- 84 41' 23" 0	37.661389	-84.689722
KY0053431	Herrington Haven S	+ 37 39' 41" 0	- 84 41' 23" 0	37.661389	-84.689722
KY0053431	Herrington Haven S	+ 37 39' 41" 0	- 84 41' 23" 0	37.661389	-84.689722
KY0053431	Herrington Haven S	+ 37 39' 41" 0	- 84 41' 23" 0	37.661389	-84.689722

KY0053431	Herrington Haven S	+ 37 39' 41" 0	- 84 41' 23" 0	37.661389	-84.689722
KY0053431	Herrington Haven S	+ 37 39' 41" 0	- 84 41' 23" 0	37.661389	-84.689722
KY0053431	Herrington Haven S	+ 37 39' 41" 0	- 84 41' 23" 0	37.661389	-84.689722
KY0053431	Herrington Haven S	+ 37 39' 41" 0	- 84 41' 23" 0	37.661389	-84.689722
KY0053431	Herrington Haven S	+ 37 39' 41" 0	- 84 41' 23" 0	37.661389	-84.689722
KY0053431	Herrington Haven S	+ 37 39' 41" 0	- 84 41' 23" 0	37.661389	-84.689722
KY0053431	Herrington Haven S	+ 37 39' 41" 0	- 84 41' 23" 0	37.661389	-84.689722
KY0053431	Herrington Haven S	+ 37 39' 41" 0	- 84 41' 23" 0	37.661389	-84.689722
KY0053431	Herrington Haven S	+ 37 39' 41" 0	- 84 41' 23" 0	37.661389	-84.689722
KY0053431	Herrington Haven S	+ 37 39' 41" 0	- 84 41' 23" 0	37.661389	-84.689722
KY0053431	Herrington Haven S	+ 37 39' 41" 0	- 84 41' 23" 0	37.661389	-84.689722
KY0053431	Herrington Haven S	+ 37 39' 41" 0	- 84 41' 23" 0	37.661389	-84.689722
KY0053431	Herrington Haven S	+ 37 39' 41" 0	- 84 41' 23" 0	37.661389	-84.689722
KY0053431	Herrington Haven S	+ 37 39' 41" 0	- 84 41' 23" 0	37.661389	-84.689722
KY0053431	Herrington Haven S	+ 37 39' 41" 0	- 84 41' 23" 0	37.661389	-84.689722
KY0053431	Herrington Haven S	+ 37 39' 41" 0	- 84 41' 23" 0	37.661389	-84.689722
KY0053431	Herrington Haven S	+ 37 39' 41" 0	- 84 41' 23" 0	37.661389	-84.689722
KY0053431	Herrington Haven S	+ 37 39' 41" 0	- 84 41' 23" 0	37.661389	-84.689722
KY0053431	Herrington Haven S	+ 37 39' 41" 0	- 84 41' 23" 0	37.661389	-84.689722
KY0053431	Herrington Haven S	+ 37 39' 41" 0	- 84 41' 23" 0	37.661389	-84.689722
KY0053431	Herrington Haven S	+ 37 39' 41" 0	- 84 41' 23" 0	37.661389	-84.689722
KY0053431	Herrington Haven S	+ 37 39' 41" 0	- 84 41' 23" 0	37.661389	-84.689722
KY0053431	Herrington Haven S	+ 37 39' 41" 0	- 84 41' 23" 0	37.661389	-84.689722
KY0053431	Herrington Haven S	+ 37 39' 41" 0	- 84 41' 23" 0	37.661389	-84.689722
KY0053431	Herrington Haven S	+ 37 39' 41" 0	- 84 41' 23" 0	37.661389	-84.689722
KY0053431	Herrington Haven S	+ 37 39' 41" 0	- 84 41' 23" 0	37.661389	-84.689722
KY0053431	Herrington Haven S	+ 37 39' 41" 0	- 84 41' 23" 0	37.661389	-84.689722
KY0053431	Herrington Haven S	+ 37 39' 41" 0	- 84 41' 23" 0	37.661389	-84.689722
KY0053431	Herrington Haven S	+ 37 39' 41" 0	- 84 41' 23" 0	37.661389	-84.689722
KY0053431	Herrington Haven S	+ 37 39' 41" 0	- 84 41' 23" 0	37.661389	-84.689722
KY0053431	Herrington Haven S	+ 37 39' 41" 0	- 84 41' 23" 0	37.661389	-84.689722
KY0053431	Herrington Haven S	+ 37 39' 41" 0	- 84 41' 23" 0	37.661389	-84.689722
KY0053431	Herrington Haven S	+ 37 39' 41" 0	- 84 41' 23" 0	37.661389	-84.689722
KY0053431	Herrington Haven S	+ 37 39' 41" 0	- 84 41' 23" 0	37.661389	-84.689722
KY0053431	Herrington Haven S	+ 37 39' 41" 0	- 84 41' 23" 0	37.661389	-84.689722
KY0053431	Herrington Haven S	+ 37 39' 41" 0	- 84 41' 23" 0	37.661389	-84.689722
KY0053431	Herrington Haven S	+ 37 39' 41" 0	- 84 41' 23" 0	37.661389	-84.689722
KY0053431	Herrington Haven S	+ 37 39' 41" 0	- 84 41' 23" 0	37.661389	-84.689722
KY0053431	Herrington Haven S	+ 37 39' 41" 0	- 84 41' 23" 0	37.661389	-84.689722
KY0053431	Herrington Haven S	+ 37 39' 41" 0	- 84 41' 23" 0	37.661389	-84.689722
KY0053431	Herrington Haven S	+ 37 39' 41" 0	- 84 41' 23" 0	37.661389	-84.689722

KY0053431	Herrington Haven S	+ 37 39' 41" 0	- 84 41' 23" 0	37.661389	-84.689722
KY0053431	Herrington Haven S	+ 37 39' 41" 0	- 84 41' 23" 0	37.661389	-84.689722
KY0053431	Herrington Haven S	+ 37 39' 41" 0	- 84 41' 23" 0	37.661389	-84.689722
KY0053431	Herrington Haven S	+ 37 39' 41" 0	- 84 41' 23" 0	37.661389	-84.689722
KY0053431	Herrington Haven S	+ 37 39' 41" 0	- 84 41' 23" 0	37.661389	-84.689722
KY0053431	Herrington Haven S	+ 37 39' 41" 0	- 84 41' 23" 0	37.661389	-84.689722
KY0053431	Herrington Haven S	+ 37 39' 41" 0	- 84 41' 23" 0	37.661389	-84.689722
KY0053431	Herrington Haven S	+ 37 39' 41" 0	- 84 41' 23" 0	37.661389	-84.689722
KY0053431	Herrington Haven S	+ 37 39' 41" 0	- 84 41' 23" 0	37.661389	-84.689722
KY0053431	Herrington Haven S	+ 37 39' 41" 0	- 84 41' 23" 0	37.661389	-84.689722
KY0053431	Herrington Haven S	+ 37 39' 41" 0	- 84 41' 23" 0	37.661389	-84.689722
KY0053431	Herrington Haven S	+ 37 39' 41" 0	- 84 41' 23" 0	37.661389	-84.689722
KY0053431	Herrington Haven S	+ 37 39' 41" 0	- 84 41' 23" 0	37.661389	-84.689722
KY0053431	Herrington Haven S	+ 37 39' 41" 0	- 84 41' 23" 0	37.661389	-84.689722
KY0053431	Herrington Haven S	+ 37 39' 41" 0	- 84 41' 23" 0	37.661389	-84.689722
KY0053431	Herrington Haven S	+ 37 39' 41" 0	- 84 41' 23" 0	37.661389	-84.689722
KY0053431	Herrington Haven S	+ 37 39' 41" 0	- 84 41' 23" 0	37.661389	-84.689722
KY0053431	Herrington Haven S	+ 37 39' 41" 0	- 84 41' 23" 0	37.661389	-84.689722
KY0053431	Herrington Haven S	+ 37 39' 41" 0	- 84 41' 23" 0	37.661389	-84.689722
KY0053431	Herrington Haven S	+ 37 39' 41" 0	- 84 41' 23" 0	37.661389	-84.689722
KY0053431	Herrington Haven S	+ 37 39' 41" 0	- 84 41' 23" 0	37.661389	-84.689722
KY0053431	Herrington Haven S	+ 37 39' 41" 0	- 84 41' 23" 0	37.661389	-84.689722
KY0053431	Herrington Haven S	+ 37 39' 41" 0	- 84 41' 23" 0	37.661389	-84.689722
KY0053431	Herrington Haven S	+ 37 39' 41" 0	- 84 41' 23" 0	37.661389	-84.689722
KY0053431	Herrington Haven S	+ 37 39' 41" 0	- 84 41' 23" 0	37.661389	-84.689722
KY0053431	Herrington Haven S	+ 37 39' 41" 0	- 84 41' 23" 0	37.661389	-84.689722
KY0053431	Herrington Haven S	+ 37 39' 41" 0	- 84 41' 23" 0	37.661389	-84.689722
KY0053431	Herrington Haven S	+ 37 39' 41" 0	- 84 41' 23" 0	37.661389	-84.689722
KY0053431	Herrington Haven S	+ 37 39' 41" 0	- 84 41' 23" 0	37.661389	-84.689722
KY0053431	Herrington Haven S	+ 37 39' 41" 0	- 84 41' 23" 0	37.661389	-84.689722
KY0053431	Herrington Haven S	+ 37 39' 41" 0	- 84 41' 23" 0	37.661389	-84.689722
KY0053431	Herrington Haven S	+ 37 39' 41" 0	- 84 41' 23" 0	37.661389	-84.689722
KY0053431	Herrington Haven S	+ 37 39' 41" 0	- 84 41' 23" 0	37.661389	-84.689722
KY0053431	Herrington Haven S	+ 37 39' 41" 0	- 84 41' 23" 0	37.661389	-84.689722
KY0053431	Herrington Haven S	+ 37 39' 41" 0	- 84 41' 23" 0	37.661389	-84.689722
KY0053431	Herrington Haven S	+ 37 39' 41" 0	- 84 41' 23" 0	37.661389	-84.689722
KY0053431	Herrington Haven S	+ 37 39' 41" 0	- 84 41' 23" 0	37.661389	-84.689722
KY0053431	Herrington Haven S	+ 37 39' 41" 0	- 84 41' 23" 0	37.661389	-84.689722
KY0053431	Herrington Haven S	+ 37 39' 41" 0	- 84 41' 23" 0	37.661389	-84.689722
KY0053431	Herrington Haven S	+ 37 39' 41" 0	- 84 41' 23" 0	37.661389	-84.689722
KY0053431	Herrington Haven S	+ 37 39' 41" 0	- 84 41' 23" 0	37.661389	-84.689722

KY0053431	Herrington Haven S	+ 37 39' 41" 0	- 84 41' 23" 0	37.661389	-84.689722
KY0053431	Herrington Haven S	+ 37 39' 41" 0	- 84 41' 23" 0	37.661389	-84.689722
KY0053431	Herrington Haven S	+ 37 39' 41" 0	- 84 41' 23" 0	37.661389	-84.689722
KY0053431	Herrington Haven S	+ 37 39' 41" 0	- 84 41' 23" 0	37.661389	-84.689722
KY0053431	Herrington Haven S	+ 37 39' 41" 0	- 84 41' 23" 0	37.661389	-84.689722
KY0053431	Herrington Haven S	+ 37 39' 41" 0	- 84 41' 23" 0	37.661389	-84.689722
KY0053431	Herrington Haven S	+ 37 39' 41" 0	- 84 41' 23" 0	37.661389	-84.689722
KY0053431	Herrington Haven S	+ 37 39' 41" 0	- 84 41' 23" 0	37.661389	-84.689722
KY0053431	Herrington Haven S	+ 37 39' 41" 0	- 84 41' 23" 0	37.661389	-84.689722
KY0053431	Herrington Haven S	+ 37 39' 41" 0	- 84 41' 23" 0	37.661389	-84.689722
KY0053431	Herrington Haven S	+ 37 39' 41" 0	- 84 41' 23" 0	37.661389	-84.689722
KY0053431	Herrington Haven S	+ 37 39' 41" 0	- 84 41' 23" 0	37.661389	-84.689722
KY0053431	Herrington Haven S	+ 37 39' 41" 0	- 84 41' 23" 0	37.661389	-84.689722
KY0053431	Herrington Haven S	+ 37 39' 41" 0	- 84 41' 23" 0	37.661389	-84.689722
KY0053431	Herrington Haven S	+ 37 39' 41" 0	- 84 41' 23" 0	37.661389	-84.689722
KY0053431	Herrington Haven S	+ 37 39' 41" 0	- 84 41' 23" 0	37.661389	-84.689722
KY0053431	Herrington Haven S	+ 37 39' 41" 0	- 84 41' 23" 0	37.661389	-84.689722
KY0053431	Herrington Haven S	+ 37 39' 41" 0	- 84 41' 23" 0	37.661389	-84.689722
KY0053431	Herrington Haven S	+ 37 39' 41" 0	- 84 41' 23" 0	37.661389	-84.689722
KY0053431	Herrington Haven S	+ 37 39' 41" 0	- 84 41' 23" 0	37.661389	-84.689722
KY0053431	Herrington Haven S	+ 37 39' 41" 0	- 84 41' 23" 0	37.661389	-84.689722
KY0053431	Herrington Haven S	+ 37 39' 41" 0	- 84 41' 23" 0	37.661389	-84.689722
KY0053431	Herrington Haven S	+ 37 39' 41" 0	- 84 41' 23" 0	37.661389	-84.689722
KY0053431	Herrington Haven S	+ 37 39' 41" 0	- 84 41' 23" 0	37.661389	-84.689722
KY0053431	Herrington Haven S	+ 37 39' 41" 0	- 84 41' 23" 0	37.661389	-84.689722
KY0053431	Herrington Haven S	+ 37 39' 41" 0	- 84 41' 23" 0	37.661389	-84.689722
KY0053431	Herrington Haven S	+ 37 39' 41" 0	- 84 41' 23" 0	37.661389	-84.689722
KY0053431	Herrington Haven S	+ 37 39' 41" 0	- 84 41' 23" 0	37.661389	-84.689722
KY0053431	Herrington Haven S	+ 37 39' 41" 0	- 84 41' 23" 0	37.661389	-84.689722
KY0053431	Herrington Haven S	+ 37 39' 41" 0	- 84 41' 23" 0	37.661389	-84.689722
KY0053431	Herrington Haven S	+ 37 39' 41" 0	- 84 41' 23" 0	37.661389	-84.689722
KY0053431	Herrington Haven S	+ 37 39' 41" 0	- 84 41' 23" 0	37.661389	-84.689722
KY0053431	Herrington Haven S	+ 37 39' 41" 0	- 84 41' 23" 0	37.661389	-84.689722
KY0053431	Herrington Haven S	+ 37 39' 41" 0	- 84 41' 23" 0	37.661389	-84.689722
KY0053431	Herrington Haven S	+ 37 39' 41" 0	- 84 41' 23" 0	37.661389	-84.689722
KY0053431	Herrington Haven S	+ 37 39' 41" 0	- 84 41' 23" 0	37.661389	-84.689722
KY0053431	Herrington Haven S	+ 37 39' 41" 0	- 84 41' 23" 0	37.661389	-84.689722
KY0053431	Herrington Haven S	+ 37 39' 41" 0	- 84 41' 23" 0	37.661389	-84.689722
KY0053431	Herrington Haven S	+ 37 39' 41" 0	- 84 41' 23" 0	37.661389	-84.689722
KY0053431	Herrington Haven S	+ 37 39' 41" 0	- 84 41' 23" 0	37.661389	-84.689722
KY0053431	Herrington Haven S	+ 37 39' 41" 0	- 84 41' 23" 0	37.661389	-84.689722

KY0053431	Herrington Haven S	+ 37 39' 41" 0	- 84 41' 23" 0	37.661389	-84.689722
KY0053431	Herrington Haven S	+ 37 39' 41" 0	- 84 41' 23" 0	37.661389	-84.689722
KY0053431	Herrington Haven S	+ 37 39' 41" 0	- 84 41' 23" 0	37.661389	-84.689722
KY0053431	Herrington Haven S	+ 37 39' 41" 0	- 84 41' 23" 0	37.661389	-84.689722
KY0053431	Herrington Haven S	+ 37 39' 41" 0	- 84 41' 23" 0	37.661389	-84.689722
KY0053431	Herrington Haven S	+ 37 39' 41" 0	- 84 41' 23" 0	37.661389	-84.689722
KY0053431	Herrington Haven S	+ 37 39' 41" 0	- 84 41' 23" 0	37.661389	-84.689722
KY0053431	Herrington Haven S	+ 37 39' 41" 0	- 84 41' 23" 0	37.661389	-84.689722

County Name	Facility UDF3	App. Design Flow (	mary Permit SIC Co	rr. Major Minor Sta	Limit Set Name
Garrard		0.0098	6552	Minor	Domestic Wastewat
Garrard		0.0098	6552	Minor	Domestic Wastewat
Garrard		0.0098	6552	Minor	Domestic Wastewat
Garrard		0.0098	6552	Minor	Domestic Wastewat
Garrard		0.0098	6552	Minor	Domestic Wastewat
Garrard		0.0098	6552	Minor	Domestic Wastewat
Garrard		0.0098	6552	Minor	Domestic Wastewat
Garrard		0.0098	6552	Minor	Domestic Wastewat
Garrard		0.0098	6552	Minor	Domestic Wastewat
Garrard		0.0098	6552	Minor	Domestic Wastewat
Garrard		0.0098	6552	Minor	Domestic Wastewat
Garrard		0.0098	6552	Minor	Domestic Wastewat
Garrard		0.0098	6552	Minor	Domestic Wastewat
Garrard		0.0098	6552	Minor	Domestic Wastewat
Garrard		0.0098	6552	Minor	Domestic Wastewat
Garrard		0.0098	6552	Minor	Domestic Wastewat
Garrard		0.0098	6552	Minor	Domestic Wastewat
Garrard		0.0098	6552	Minor	Domestic Wastewat
Garrard		0.0098	6552	Minor	SANITARY WASTE
Garrard		0.0098	6552	Minor	SANITARY WASTE
Garrard		0.0098	6552	Minor	SANITARY WASTE
Garrard		0.0098	6552	Minor	SANITARY WASTE
Garrard		0.0098	6552	Minor	SANITARY WASTE
Garrard		0.0098	6552	Minor	SANITARY WASTE
Garrard		0.0098	6552	Minor	SANITARY WASTE
Garrard		0.0098	6552	Minor	SANITARY WASTE
Garrard		0.0098	6552	Minor	SANITARY WASTE
Garrard		0.0098	6552	Minor	SANITARY WASTE
Garrard		0.0098	6552	Minor	SANITARY WASTE
Garrard		0.0098	6552	Minor	SANITARY WASTE
Garrard		0.0098	6552	Minor	SANITARY WASTE
Garrard		0.0098	6552	Minor	SANITARY WASTE
Garrard		0.0098	6552	Minor	SANITARY WASTE
Garrard		0.0098	6552	Minor	SANITARY WASTE
Garrard		0.0098	6552	Minor	SANITARY WASTE
Garrard		0.0098	6552	Minor	SANITARY WASTE
Garrard		0.0098	6552	Minor	SANITARY WASTE
Garrard		0.0098	6552	Minor	SANITARY WASTE
Garrard		0.0098	6552	Minor	SANITARY WASTE
Garrard		0.0098	6552	Minor	SANITARY WASTE
Garrard		0.0098	6552	Minor	SANITARY WASTE
Garrard		0.0098	6552	Minor	SANITARY WASTE
Garrard		0.0098	6552	Minor	SANITARY WASTE

Garrard		0.0098	6552	Minor	SANITARY WASTE
Garrard		0.0098	6552	Minor	SANITARY WASTE
Garrard		0.0098	6552	Minor	SANITARY WASTE
Garrard		0.0098	6552	Minor	SANITARY WASTE
Garrard		0.0098	6552	Minor	SANITARY WASTE
Garrard		0.0098	6552	Minor	SANITARY WASTE
Garrard		0.0098	6552	Minor	SANITARY WASTE
Garrard		0.0098	6552	Minor	SANITARY WASTE
Garrard		0.0098	6552	Minor	SANITARY WASTE
Garrard		0.0098	6552	Minor	SANITARY WASTE
Garrard		0.0098	6552	Minor	SANITARY WASTE
Garrard		0.0098	6552	Minor	SANITARY WASTE
Garrard		0.0098	6552	Minor	SANITARY WASTE
Garrard		0.0098	6552	Minor	SANITARY WASTE
Garrard		0.0098	6552	Minor	SANITARY WASTE
Garrard		0.0098	6552	Minor	SANITARY WASTE
Garrard		0.0098	6552	Minor	SANITARY WASTE
Garrard		0.0098	6552	Minor	SANITARY WASTE
Garrard		0.0098	6552	Minor	SANITARY WASTE
Garrard		0.0098	6552	Minor	SANITARY WASTE
Garrard		0.0098	6552	Minor	SANITARY WASTE
Garrard		0.0098	6552	Minor	SANITARY WASTE
Garrard		0.0098	6552	Minor	SANITARY WASTE
Garrard		0.0098	6552	Minor	SANITARY WASTE
Garrard		0.0098	6552	Minor	SANITARY WASTE
Garrard		0.0098	6552	Minor	SANITARY WASTE
Garrard		0.0098	6552	Minor	SANITARY WASTE
Garrard		0.0098	6552	Minor	SANITARY WASTE
Garrard		0.0098	6552	Minor	SANITARY WASTE
Garrard		0.0098	6552	Minor	SANITARY WASTE
Garrard		0.0098	6552	Minor	SANITARY WASTE
Garrard		0.0098	6552	Minor	SANITARY WASTE
Garrard		0.0098	6552	Minor	SANITARY WASTE
Garrard		0.0098	6552	Minor	SANITARY WASTE
Garrard		0.0098	6552	Minor	SANITARY WASTE
Garrard		0.0098	6552	Minor	SANITARY WASTE
Garrard		0.0098	6552	Minor	SANITARY WASTE
Garrard		0.0098	6552	Minor	SANITARY WASTE
Garrard		0.0098	6552	Minor	SANITARY WASTE
Garrard		0.0098	6552	Minor	SANITARY WASTE
Garrard		0.0098	6552	Minor	SANITARY WASTE

Garrard		0.0098	6552	Minor	SANITARY WASTE
Garrard		0.0098	6552	Minor	SANITARY WASTE
Garrard		0.0098	6552	Minor	SANITARY WASTE
Garrard		0.0098	6552	Minor	SANITARY WASTE
Garrard		0.0098	6552	Minor	SANITARY WASTE
Garrard		0.0098	6552	Minor	SANITARY WASTE
Garrard		0.0098	6552	Minor	SANITARY WASTE
Garrard		0.0098	6552	Minor	SANITARY WASTE
Garrard		0.0098	6552	Minor	SANITARY WASTE
Garrard		0.0098	6552	Minor	SANITARY WASTE
Garrard		0.0098	6552	Minor	SANITARY WASTE
Garrard		0.0098	6552	Minor	SANITARY WASTE
Garrard		0.0098	6552	Minor	SANITARY WASTE
Garrard		0.0098	6552	Minor	SANITARY WASTE
Garrard		0.0098	6552	Minor	SANITARY WASTE
Garrard		0.0098	6552	Minor	SANITARY WASTE
Garrard		0.0098	6552	Minor	SANITARY WASTE
Garrard		0.0098	6552	Minor	SANITARY WASTE
Garrard		0.0098	6552	Minor	SANITARY WASTE
Garrard		0.0098	6552	Minor	SANITARY WASTE
Garrard		0.0098	6552	Minor	SANITARY WASTE
Garrard		0.0098	6552	Minor	SANITARY WASTE
Garrard		0.0098	6552	Minor	SANITARY WASTE
Garrard		0.0098	6552	Minor	SANITARY WASTE
Garrard		0.0098	6552	Minor	SANITARY WASTE
Garrard		0.0098	6552	Minor	SANITARY WASTE
Garrard		0.0098	6552	Minor	SANITARY WASTE
Garrard		0.0098	6552	Minor	SANITARY WASTE
Garrard		0.0098	6552	Minor	SANITARY WASTE
Garrard		0.0098	6552	Minor	SANITARY WASTE
Garrard		0.0098	6552	Minor	SANITARY WASTE
Garrard		0.0098	6552	Minor	SANITARY WASTE
Garrard		0.0098	6552	Minor	SANITARY WASTE
Garrard		0.0098	6552	Minor	SANITARY WASTE
Garrard		0.0098	6552	Minor	SANITARY WASTE
Garrard		0.0098	6552	Minor	SANITARY WASTE
Garrard		0.0098	6552	Minor	SANITARY WASTE
Garrard		0.0098	6552	Minor	SANITARY WASTE
Garrard		0.0098	6552	Minor	SANITARY WASTE
Garrard		0.0098	6552	Minor	SANITARY WASTE
Garrard		0.0098	6552	Minor	SANITARY WASTE

Garrard		0.0098	6552	Minor	SANITARY WASTE
Garrard		0.0098	6552	Minor	SANITARY WASTE
Garrard		0.0098	6552	Minor	SANITARY WASTE
Garrard		0.0098	6552	Minor	SANITARY WASTE
Garrard		0.0098	6552	Minor	SANITARY WASTE
Garrard		0.0098	6552	Minor	SANITARY WASTE
Garrard		0.0098	6552	Minor	SANITARY WASTE
Garrard		0.0098	6552	Minor	SANITARY WASTE
Garrard		0.0098	6552	Minor	SANITARY WASTE
Garrard		0.0098	6552	Minor	SANITARY WASTE
Garrard		0.0098	6552	Minor	SANITARY WASTE
Garrard		0.0098	6552	Minor	SANITARY WASTE
Garrard		0.0098	6552	Minor	SANITARY WASTE
Garrard		0.0098	6552	Minor	SANITARY WASTE
Garrard		0.0098	6552	Minor	SANITARY WASTE
Garrard		0.0098	6552	Minor	SANITARY WASTE
Garrard		0.0098	6552	Minor	SANITARY WASTE
Garrard		0.0098	6552	Minor	SANITARY WASTE
Garrard		0.0098	6552	Minor	SANITARY WASTE
Garrard		0.0098	6552	Minor	SANITARY WASTE
Garrard		0.0098	6552	Minor	SANITARY WASTE
Garrard		0.0098	6552	Minor	SANITARY WASTE
Garrard		0.0098	6552	Minor	SANITARY WASTE
Garrard		0.0098	6552	Minor	SANITARY WASTE
Garrard		0.0098	6552	Minor	SANITARY WASTE
Garrard		0.0098	6552	Minor	SANITARY WASTE
Garrard		0.0098	6552	Minor	SANITARY WASTE
Garrard		0.0098	6552	Minor	SANITARY WASTE
Garrard		0.0098	6552	Minor	SANITARY WASTE
Garrard		0.0098	6552	Minor	SANITARY WASTE
Garrard		0.0098	6552	Minor	SANITARY WASTE
Garrard		0.0098	6552	Minor	SANITARY WASTE
Garrard		0.0098	6552	Minor	SANITARY WASTE
Garrard		0.0098	6552	Minor	SANITARY WASTE
Garrard		0.0098	6552	Minor	SANITARY WASTE
Garrard		0.0098	6552	Minor	SANITARY WASTE
Garrard		0.0098	6552	Minor	SANITARY WASTE
Garrard		0.0098	6552	Minor	SANITARY WASTE
Garrard		0.0098	6552	Minor	SANITARY WASTE
Garrard		0.0098	6552	Minor	SANITARY WASTE
Garrard		0.0098	6552	Minor	SANITARY WASTE

Garrard		0.0098	6552	Minor	SANITARY WASTE
Garrard		0.0098	6552	Minor	SANITARY WASTE
Garrard		0.0098	6552	Minor	SANITARY WASTE
Garrard		0.0098	6552	Minor	SANITARY WASTE
Garrard		0.0098	6552	Minor	SANITARY WASTE
Garrard		0.0098	6552	Minor	SANITARY WASTE
Garrard		0.0098	6552	Minor	SANITARY WASTE
Garrard		0.0098	6552	Minor	SANITARY WASTE
Garrard		0.0098	6552	Minor	SANITARY WASTE
Garrard		0.0098	6552	Minor	SANITARY WASTE
Garrard		0.0098	6552	Minor	SANITARY WASTE
Garrard		0.0098	6552	Minor	SANITARY WASTE
Garrard		0.0098	6552	Minor	SANITARY WASTE
Garrard		0.0098	6552	Minor	SANITARY WASTE
Garrard		0.0098	6552	Minor	SANITARY WASTE
Garrard		0.0098	6552	Minor	SANITARY WASTE
Garrard		0.0098	6552	Minor	SANITARY WASTE
Garrard		0.0098	6552	Minor	SANITARY WASTE
Garrard		0.0098	6552	Minor	SANITARY WASTE
Garrard		0.0098	6552	Minor	SANITARY WASTE
Garrard		0.0098	6552	Minor	SANITARY WASTE
Garrard		0.0098	6552	Minor	SANITARY WASTE
Garrard		0.0098	6552	Minor	SANITARY WASTE
Garrard		0.0098	6552	Minor	SANITARY WASTE
Garrard		0.0098	6552	Minor	SANITARY WASTE
Garrard		0.0098	6552	Minor	SANITARY WASTE
Garrard		0.0098	6552	Minor	SANITARY WASTE
Garrard		0.0098	6552	Minor	SANITARY WASTE
Garrard		0.0098	6552	Minor	SANITARY WASTE
Garrard		0.0098	6552	Minor	SANITARY WASTE
Garrard		0.0098	6552	Minor	SANITARY WASTE
Garrard		0.0098	6552	Minor	SANITARY WASTE
Garrard		0.0098	6552	Minor	SANITARY WASTE
Garrard		0.0098	6552	Minor	SANITARY WASTE
Garrard		0.0098	6552	Minor	SANITARY WASTE
Garrard		0.0098	6552	Minor	SANITARY WASTE
Garrard		0.0098	6552	Minor	SANITARY WASTE
Garrard		0.0098	6552	Minor	SANITARY WASTE
Garrard		0.0098	6552	Minor	SANITARY WASTE
Garrard		0.0098	6552	Minor	SANITARY WASTE
Garrard		0.0098	6552	Minor	SANITARY WASTE

Garrard		0.0098	6552	Minor	SANITARY WASTE
Garrard		0.0098	6552	Minor	SANITARY WASTE
Garrard		0.0098	6552	Minor	SANITARY WASTE
Garrard		0.0098	6552	Minor	SANITARY WASTE
Garrard		0.0098	6552	Minor	SANITARY WASTE
Garrard		0.0098	6552	Minor	SANITARY WASTE
Garrard		0.0098	6552	Minor	SANITARY WASTE
Garrard		0.0098	6552	Minor	SANITARY WASTE
Garrard		0.0098	6552	Minor	SANITARY WASTE
Garrard		0.0098	6552	Minor	SANITARY WASTE
Garrard		0.0098	6552	Minor	SANITARY WASTE
Garrard		0.0098	6552	Minor	SANITARY WASTE
Garrard		0.0098	6552	Minor	SANITARY WASTE
Garrard		0.0098	6552	Minor	SANITARY WASTE
Garrard		0.0098	6552	Minor	SANITARY WASTE
Garrard		0.0098	6552	Minor	SANITARY WASTE
Garrard		0.0098	6552	Minor	SANITARY WASTE
Garrard		0.0098	6552	Minor	SANITARY WASTE
Garrard		0.0098	6552	Minor	SANITARY WASTE
Garrard		0.0098	6552	Minor	SANITARY WASTE
Garrard		0.0098	6552	Minor	SANITARY WASTE
Garrard		0.0098	6552	Minor	SANITARY WASTE
Garrard		0.0098	6552	Minor	SANITARY WASTE
Garrard		0.0098	6552	Minor	SANITARY WASTE
Garrard		0.0098	6552	Minor	SANITARY WASTE
Garrard		0.0098	6552	Minor	SANITARY WASTE
Garrard		0.0098	6552	Minor	SANITARY WASTE
Garrard		0.0098	6552	Minor	SANITARY WASTE
Garrard		0.0098	6552	Minor	SANITARY WASTE
Garrard		0.0098	6552	Minor	SANITARY WASTE
Garrard		0.0098	6552	Minor	SANITARY WASTE
Garrard		0.0098	6552	Minor	SANITARY WASTE
Garrard		0.0098	6552	Minor	SANITARY WASTE
Garrard		0.0098	6552	Minor	SANITARY WASTE
Garrard		0.0098	6552	Minor	SANITARY WASTE
Garrard		0.0098	6552	Minor	SANITARY WASTE
Garrard		0.0098	6552	Minor	SANITARY WASTE
Garrard		0.0098	6552	Minor	SANITARY WASTE
Garrard		0.0098	6552	Minor	SANITARY WASTE
Garrard		0.0098	6552	Minor	SANITARY WASTE
Garrard		0.0098	6552	Minor	SANITARY WASTE

Garrard		0.0098	6552	Minor	SANITARY WASTE
Garrard		0.0098	6552	Minor	SANITARY WASTE
Garrard		0.0098	6552	Minor	SANITARY WASTE
Garrard		0.0098	6552	Minor	SANITARY WASTE
Garrard		0.0098	6552	Minor	SANITARY WASTE
Garrard		0.0098	6552	Minor	SANITARY WASTE
Garrard		0.0098	6552	Minor	SANITARY WASTE
Garrard		0.0098	6552	Minor	SANITARY WASTE
Garrard		0.0098	6552	Minor	SANITARY WASTE
Garrard		0.0098	6552	Minor	SANITARY WASTE
Garrard		0.0098	6552	Minor	SANITARY WASTE
Garrard		0.0098	6552	Minor	SANITARY WASTE
Garrard		0.0098	6552	Minor	SANITARY WASTE
Garrard		0.0098	6552	Minor	SANITARY WASTE
Garrard		0.0098	6552	Minor	SANITARY WASTE
Garrard		0.0098	6552	Minor	SANITARY WASTE
Garrard		0.0098	6552	Minor	SANITARY WASTE
Garrard		0.0098	6552	Minor	SANITARY WASTE
Garrard		0.0098	6552	Minor	SANITARY WASTE
Garrard		0.0098	6552	Minor	SANITARY WASTE
Garrard		0.0098	6552	Minor	SANITARY WASTE
Garrard		0.0098	6552	Minor	SANITARY WASTE
Garrard		0.0098	6552	Minor	SANITARY WASTE
Garrard		0.0098	6552	Minor	SANITARY WASTE
Garrard		0.0098	6552	Minor	SANITARY WASTE
Garrard		0.0098	6552	Minor	SANITARY WASTE
Garrard		0.0098	6552	Minor	SANITARY WASTE
Garrard		0.0098	6552	Minor	SANITARY WASTE
Garrard		0.0098	6552	Minor	SANITARY WASTE
Garrard		0.0098	6552	Minor	SANITARY WASTE
Garrard		0.0098	6552	Minor	SANITARY WASTE
Garrard		0.0098	6552	Minor	SANITARY WASTE
Garrard		0.0098	6552	Minor	SANITARY WASTE
Garrard		0.0098	6552	Minor	SANITARY WASTE
Garrard		0.0098	6552	Minor	SANITARY WASTE
Garrard		0.0098	6552	Minor	SANITARY WASTE
Garrard		0.0098	6552	Minor	SANITARY WASTE
Garrard		0.0098	6552	Minor	SANITARY WASTE
Garrard		0.0098	6552	Minor	SANITARY WASTE
Garrard		0.0098	6552	Minor	SANITARY WASTE
Garrard		0.0098	6552	Minor	SANITARY WASTE

Garrard		0.0098	6552	Minor	SANITARY WASTE
Garrard		0.0098	6552	Minor	SANITARY WASTE
Garrard		0.0098	6552	Minor	SANITARY WASTE
Garrard		0.0098	6552	Minor	SANITARY WASTE
Garrard		0.0098	6552	Minor	SANITARY WASTE
Garrard		0.0098	6552	Minor	SANITARY WASTE
Garrard		0.0098	6552	Minor	SANITARY WASTE
Garrard		0.0098	6552	Minor	SANITARY WASTE

Number of Report	umber of Submissio	Initial Monitoring	R Initial DMR Due D	Perm Feature ID	Limit Set Designato
3	3	1/1/2022	4/28/2022	001	2
3	3	1/1/2022	4/28/2022	001	2
3	3	1/1/2022	4/28/2022	001	2
3	3	1/1/2022	4/28/2022	001	2
3	3	1/1/2022	4/28/2022	001	2
3	3	1/1/2022	4/28/2022	001	2
3	3	1/1/2022	4/28/2022	001	2
3	3	1/1/2022	4/28/2022	001	2
3	3	1/1/2022	4/28/2022	001	2
3	3	1/1/2022	4/28/2022	001	2
3	3	1/1/2022	4/28/2022	001	2
3	3	1/1/2022	4/28/2022	001	2
3	3	1/1/2022	4/28/2022	001	2
3	3	1/1/2022	4/28/2022	001	2
3	3	1/1/2022	4/28/2022	001	2
3	3	1/1/2022	4/28/2022	001	2
3	3	1/1/2022	4/28/2022	001	2
3	3	1/1/2022	4/28/2022	001	2
3	3	1/1/2022	4/28/2022	001	2
3	3	1/1/2022	4/28/2022	001	2
3	3	1/1/2022	4/28/2022	001	2
3	3	1/1/2022	4/28/2022	001	2
3	3	1/1/2022	4/28/2022	001	2
3	3	1/1/2013	4/28/2013	001	1
3	3	1/1/2013	4/28/2013	001	1
3	3	1/1/2013	4/28/2013	001	1
3	3	1/1/2013	4/28/2013	001	1
3	3	1/1/2013	4/28/2013	001	1
3	3	1/1/2013	4/28/2013	001	1
3	3	1/1/2013	4/28/2013	001	1
3	3	1/1/2013	4/28/2013	001	1
3	3	1/1/2013	4/28/2013	001	1
3	3	1/1/2013	4/28/2013	001	1
3	3	1/1/2013	4/28/2013	001	1
3	3	1/1/2013	4/28/2013	001	1
3	3	1/1/2013	4/28/2013	001	1
3	3	1/1/2013	4/28/2013	001	1
3	3	1/1/2013	4/28/2013	001	1
3	3	1/1/2013	4/28/2013	001	1
3	3	1/1/2013	4/28/2013	001	1
3	3	1/1/2013	4/28/2013	001	1
3	3	1/1/2013	4/28/2013	001	1
3	3	1/1/2013	4/28/2013	001	1
3	3	1/1/2013	4/28/2013	001	1

3	3	1/1/2013	4/28/2013	001	1
3	3	1/1/2013	4/28/2013	001	1
3	3	1/1/2013	4/28/2013	001	1
3	3	1/1/2013	4/28/2013	001	1
3	3	1/1/2013	4/28/2013	001	1
3	3	1/1/2013	4/28/2013	001	1
3	3	1/1/2013	4/28/2013	001	1
3	3	1/1/2013	4/28/2013	001	1
3	3	1/1/2013	4/28/2013	001	1
3	3	1/1/2013	4/28/2013	001	1
3	3	1/1/2013	4/28/2013	001	1
3	3	1/1/2013	4/28/2013	001	1
3	3	1/1/2013	4/28/2013	001	1
3	3	1/1/2013	4/28/2013	001	1
3	3	1/1/2013	4/28/2013	001	1
3	3	1/1/2013	4/28/2013	001	1
3	3	1/1/2013	4/28/2013	001	1
3	3	1/1/2013	4/28/2013	001	1
3	3	1/1/2013	4/28/2013	001	1
3	3	1/1/2013	4/28/2013	001	1
3	3	1/1/2013	4/28/2013	001	1
3	3	1/1/2013	4/28/2013	001	1
3	3	1/1/2013	4/28/2013	001	1
3	3	1/1/2013	4/28/2013	001	1
3	3	1/1/2013	4/28/2013	001	1
3	3	1/1/2013	4/28/2013	001	1
3	3	1/1/2013	4/28/2013	001	1
3	3	1/1/2013	4/28/2013	001	1
3	3	1/1/2013	4/28/2013	001	1
3	3	1/1/2013	4/28/2013	001	1
3	3	1/1/2013	4/28/2013	001	1
3	3	1/1/2013	4/28/2013	001	1
3	3	1/1/2013	4/28/2013	001	1
3	3	1/1/2013	4/28/2013	001	1
3	3	1/1/2013	4/28/2013	001	1
3	3	1/1/2013	4/28/2013	001	1
3	3	1/1/2013	4/28/2013	001	1
3	3	1/1/2013	4/28/2013	001	1
3	3	1/1/2013	4/28/2013	001	1
3	3	1/1/2013	4/28/2013	001	1
3	3	1/1/2013	4/28/2013	001	1

3	3	1/1/2013	4/28/2013	001	1
3	3	1/1/2013	4/28/2013	001	1
3	3	1/1/2013	4/28/2013	001	1
3	3	1/1/2013	4/28/2013	001	1
3	3	1/1/2013	4/28/2013	001	1
3	3	1/1/2013	4/28/2013	001	1
3	3	1/1/2013	4/28/2013	001	1
3	3	1/1/2013	4/28/2013	001	1
3	3	1/1/2013	4/28/2013	001	1
3	3	1/1/2013	4/28/2013	001	1
3	3	1/1/2013	4/28/2013	001	1
3	3	1/1/2013	4/28/2013	001	1
3	3	1/1/2013	4/28/2013	001	1
3	3	1/1/2013	4/28/2013	001	1
3	3	1/1/2013	4/28/2013	001	1
3	3	1/1/2013	4/28/2013	001	1
3	3	1/1/2013	4/28/2013	001	1
3	3	1/1/2013	4/28/2013	001	1
3	3	1/1/2013	4/28/2013	001	1
3	3	1/1/2013	4/28/2013	001	1
3	3	1/1/2013	4/28/2013	001	1
3	3	1/1/2013	4/28/2013	001	1
3	3	1/1/2013	4/28/2013	001	1
3	3	1/1/2013	4/28/2013	001	1
3	3	1/1/2013	4/28/2013	001	1
3	3	1/1/2013	4/28/2013	001	1
3	3	1/1/2013	4/28/2013	001	1
3	3	1/1/2013	4/28/2013	001	1
3	3	1/1/2013	4/28/2013	001	1
3	3	1/1/2013	4/28/2013	001	1
3	3	1/1/2013	4/28/2013	001	1
3	3	1/1/2013	4/28/2013	001	1
3	3	1/1/2013	4/28/2013	001	1
3	3	1/1/2013	4/28/2013	001	1
3	3	1/1/2013	4/28/2013	001	1
3	3	1/1/2013	4/28/2013	001	1
3	3	1/1/2013	4/28/2013	001	1
3	3	1/1/2013	4/28/2013	001	1
3	3	1/1/2013	4/28/2013	001	1
3	3	1/1/2013	4/28/2013	001	1
3	3	1/1/2013	4/28/2013	001	1

3	3	1/1/2013	4/28/2013	001	1
3	3	1/1/2013	4/28/2013	001	1
3	3	1/1/2013	4/28/2013	001	1
3	3	1/1/2013	4/28/2013	001	1
3	3	1/1/2013	4/28/2013	001	1
3	3	1/1/2013	4/28/2013	001	1
3	3	1/1/2013	4/28/2013	001	1
3	3	1/1/2013	4/28/2013	001	1
3	3	1/1/2013	4/28/2013	001	1
3	3	1/1/2013	4/28/2013	001	1
3	3	1/1/2013	4/28/2013	001	1
3	3	1/1/2013	4/28/2013	001	1
3	3	1/1/2013	4/28/2013	001	1
3	3	1/1/2013	4/28/2013	001	1
3	3	1/1/2013	4/28/2013	001	1
3	3	1/1/2013	4/28/2013	001	1
3	3	1/1/2013	4/28/2013	001	1
3	3	1/1/2013	4/28/2013	001	1
3	3	1/1/2013	4/28/2013	001	1
3	3	1/1/2013	4/28/2013	001	1
3	3	1/1/2013	4/28/2013	001	1
3	3	1/1/2013	4/28/2013	001	1
3	3	1/1/2013	4/28/2013	001	1
3	3	1/1/2013	4/28/2013	001	1
3	3	1/1/2013	4/28/2013	001	1
3	3	1/1/2013	4/28/2013	001	1
3	3	1/1/2013	4/28/2013	001	1
3	3	1/1/2013	4/28/2013	001	1
3	3	1/1/2013	4/28/2013	001	1
3	3	1/1/2013	4/28/2013	001	1
3	3	1/1/2013	4/28/2013	001	1
3	3	1/1/2013	4/28/2013	001	1
3	3	1/1/2013	4/28/2013	001	1
3	3	1/1/2013	4/28/2013	001	1
3	3	1/1/2013	4/28/2013	001	1
3	3	1/1/2013	4/28/2013	001	1
3	3	1/1/2013	4/28/2013	001	1
3	3	1/1/2013	4/28/2013	001	1
3	3	1/1/2013	4/28/2013	001	1
3	3	1/1/2013	4/28/2013	001	1
3	3	1/1/2013	4/28/2013	001	1

3	3	1/1/2013	4/28/2013	001	1
3	3	1/1/2013	4/28/2013	001	1
3	3	1/1/2013	4/28/2013	001	1
3	3	1/1/2013	4/28/2013	001	1
3	3	1/1/2013	4/28/2013	001	1
3	3	1/1/2013	4/28/2013	001	1
3	3	1/1/2013	4/28/2013	001	1
3	3	1/1/2013	4/28/2013	001	1
3	3	1/1/2013	4/28/2013	001	1
3	3	1/1/2013	4/28/2013	001	1
3	3	1/1/2013	4/28/2013	001	1
3	3	1/1/2013	4/28/2013	001	1
3	3	1/1/2013	4/28/2013	001	1
3	3	1/1/2013	4/28/2013	001	1
3	3	1/1/2013	4/28/2013	001	1
3	3	1/1/2013	4/28/2013	001	1
3	3	1/1/2013	4/28/2013	001	1
3	3	1/1/2013	4/28/2013	001	1
3	3	1/1/2013	4/28/2013	001	1
3	3	1/1/2013	4/28/2013	001	1
3	3	1/1/2013	4/28/2013	001	1
3	3	1/1/2013	4/28/2013	001	1
3	3	1/1/2013	4/28/2013	001	1
3	3	1/1/2013	4/28/2013	001	1
3	3	1/1/2013	4/28/2013	001	1
3	3	1/1/2013	4/28/2013	001	1
3	3	1/1/2013	4/28/2013	001	1
3	3	1/1/2013	4/28/2013	001	1
3	3	1/1/2013	4/28/2013	001	1
3	3	1/1/2013	4/28/2013	001	1
3	3	1/1/2013	4/28/2013	001	1
3	3	1/1/2013	4/28/2013	001	1
3	3	1/1/2013	4/28/2013	001	1
3	3	1/1/2013	4/28/2013	001	1
3	3	1/1/2013	4/28/2013	001	1
3	3	1/1/2013	4/28/2013	001	1
3	3	1/1/2013	4/28/2013	001	1
3	3	1/1/2013	4/28/2013	001	1
3	3	1/1/2013	4/28/2013	001	1
3	3	1/1/2013	4/28/2013	001	1
3	3	1/1/2013	4/28/2013	001	1

3	3	1/1/2013	4/28/2013	001	1
3	3	1/1/2013	4/28/2013	001	1
3	3	1/1/2013	4/28/2013	001	1
3	3	1/1/2013	4/28/2013	001	1
3	3	1/1/2013	4/28/2013	001	1
3	3	1/1/2013	4/28/2013	001	1
3	3	1/1/2013	4/28/2013	001	1
3	3	1/1/2013	4/28/2013	001	1
3	3	1/1/2013	4/28/2013	001	1
3	3	1/1/2013	4/28/2013	001	1
3	3	1/1/2013	4/28/2013	001	1
3	3	1/1/2013	4/28/2013	001	1
3	3	1/1/2013	4/28/2013	001	1
3	3	1/1/2013	4/28/2013	001	1
3	3	1/1/2013	4/28/2013	001	1
3	3	1/1/2013	4/28/2013	001	1
3	3	1/1/2013	4/28/2013	001	1
3	3	1/1/2013	4/28/2013	001	1
3	3	1/1/2013	4/28/2013	001	1
3	3	1/1/2013	4/28/2013	001	1
3	3	1/1/2013	4/28/2013	001	1
3	3	1/1/2013	4/28/2013	001	1
3	3	1/1/2013	4/28/2013	001	1
3	3	1/1/2013	4/28/2013	001	1
3	3	1/1/2013	4/28/2013	001	1
3	3	1/1/2013	4/28/2013	001	1
3	3	1/1/2013	4/28/2013	001	1
3	3	1/1/2013	4/28/2013	001	1
3	3	1/1/2013	4/28/2013	001	1
3	3	1/1/2013	4/28/2013	001	1
3	3	1/1/2013	4/28/2013	001	1
3	3	1/1/2013	4/28/2013	001	1
3	3	1/1/2013	4/28/2013	001	1
3	3	1/1/2013	4/28/2013	001	1
3	3	1/1/2013	4/28/2013	001	1
3	3	1/1/2013	4/28/2013	001	1
3	3	1/1/2013	4/28/2013	001	1
3	3	1/1/2013	4/28/2013	001	1
3	3	1/1/2013	4/28/2013	001	1
3	3	1/1/2013	4/28/2013	001	1
3	3	1/1/2013	4/28/2013	001	1
3	3	1/1/2013	4/28/2013	001	1

3	3	1/1/2013	4/28/2013	001	1
3	3	1/1/2013	4/28/2013	001	1
3	3	1/1/2013	4/28/2013	001	1
3	3	1/1/2013	4/28/2013	001	1
3	3	1/1/2013	4/28/2013	001	1
3	3	1/1/2013	4/28/2013	001	1
3	3	1/1/2013	4/28/2013	001	1
3	3	1/1/2013	4/28/2013	001	1
3	3	1/1/2013	4/28/2013	001	1
3	3	1/1/2013	4/28/2013	001	1
3	3	1/1/2013	4/28/2013	001	1
3	3	1/1/2013	4/28/2013	001	1
3	3	1/1/2013	4/28/2013	001	1
3	3	1/1/2013	4/28/2013	001	1
3	3	1/1/2013	4/28/2013	001	1
3	3	1/1/2013	4/28/2013	001	1
3	3	1/1/2013	4/28/2013	001	1
3	3	1/1/2013	4/28/2013	001	1
3	3	1/1/2013	4/28/2013	001	1
3	3	1/1/2013	4/28/2013	001	1
3	3	1/1/2013	4/28/2013	001	1
3	3	1/1/2013	4/28/2013	001	1
3	3	1/1/2013	4/28/2013	001	1
3	3	1/1/2013	4/28/2013	001	1
3	3	1/1/2013	4/28/2013	001	1
3	3	1/1/2013	4/28/2013	001	1
3	3	1/1/2013	4/28/2013	001	1
3	3	1/1/2013	4/28/2013	001	1
3	3	1/1/2013	4/28/2013	001	1
3	3	1/1/2013	4/28/2013	001	1
3	3	1/1/2013	4/28/2013	001	1
3	3	1/1/2013	4/28/2013	001	1
3	3	1/1/2013	4/28/2013	001	1
3	3	1/1/2013	4/28/2013	001	1
3	3	1/1/2013	4/28/2013	001	1
3	3	1/1/2013	4/28/2013	001	1
3	3	1/1/2013	4/28/2013	001	1
3	3	1/1/2013	4/28/2013	001	1
3	3	1/1/2013	4/28/2013	001	1
3	3	1/1/2013	4/28/2013	001	1
3	3	1/1/2013	4/28/2013	001	1
3	3	1/1/2013	4/28/2013	001	1

3	3	1/1/2013	4/28/2013	001	1
3	3	1/1/2013	4/28/2013	001	1
3	3	1/1/2013	4/28/2013	001	1
3	3	1/1/2013	4/28/2013	001	1
3	3	1/1/2013	4/28/2013	001	1
3	3	1/1/2013	4/28/2013	001	1
3	3	1/1/2013	4/28/2013	001	1
3	3	1/1/2013	4/28/2013	001	1

nitoring Location De/Longitude.Latitud	titude in Deg/Min/S/Longitude.Longitu	gitude in Deg/Min/S	Limit Start Date
Effluent Gross	+37.661111	+ 37 39' 40" 0	-84.690333	- 84 41' 25" 2	1/1/2022
Effluent Gross	+37.661111	+ 37 39' 40" 0	-84.690333	- 84 41' 25" 2	1/1/2022
Effluent Gross	+37.661111	+ 37 39' 40" 0	-84.690333	- 84 41' 25" 2	1/1/2022
Effluent Gross	+37.661111	+ 37 39' 40" 0	-84.690333	- 84 41' 25" 2	1/1/2022
Effluent Gross	+37.661111	+ 37 39' 40" 0	-84.690333	- 84 41' 25" 2	1/1/2022
Effluent Gross	+37.661111	+ 37 39' 40" 0	-84.690333	- 84 41' 25" 2	1/1/2022
Effluent Gross	+37.661111	+ 37 39' 40" 0	-84.690333	- 84 41' 25" 2	1/1/2022
Effluent Gross	+37.661111	+ 37 39' 40" 0	-84.690333	- 84 41' 25" 2	1/1/2022
Effluent Gross	+37.661111	+ 37 39' 40" 0	-84.690333	- 84 41' 25" 2	1/1/2022
Effluent Gross	+37.661111	+ 37 39' 40" 0	-84.690333	- 84 41' 25" 2	1/1/2022
Effluent Gross	+37.661111	+ 37 39' 40" 0	-84.690333	- 84 41' 25" 2	1/1/2022
Effluent Gross	+37.661111	+ 37 39' 40" 0	-84.690333	- 84 41' 25" 2	1/1/2022
Effluent Gross	+37.661111	+ 37 39' 40" 0	-84.690333	- 84 41' 25" 2	1/1/2022
Effluent Gross	+37.661111	+ 37 39' 40" 0	-84.690333	- 84 41' 25" 2	1/1/2022
Effluent Gross	+37.661111	+ 37 39' 40" 0	-84.690333	- 84 41' 25" 2	1/1/2022
Effluent Gross	+37.661111	+ 37 39' 40" 0	-84.690333	- 84 41' 25" 2	1/1/2022
Effluent Gross	+37.661111	+ 37 39' 40" 0	-84.690333	- 84 41' 25" 2	1/1/2022
Effluent Gross	+37.661111	+ 37 39' 40" 0	-84.690333	- 84 41' 25" 2	1/1/2022
Effluent Gross	+37.661111	+ 37 39' 40" 0	-84.690333	- 84 41' 25" 2	1/1/2022
Effluent Gross	+37.661111	+ 37 39' 40" 0	-84.690333	- 84 41' 25" 2	1/1/2022
Effluent Gross	37.663056	+ 37 39' 47" 0	-84.691389	- 84 41' 29" 0	3/1/2013
Effluent Gross	37.663056	+ 37 39' 47" 0	-84.691389	- 84 41' 29" 0	3/1/2013
Effluent Gross	37.663056	+ 37 39' 47" 0	-84.691389	- 84 41' 29" 0	3/1/2013
Effluent Gross	37.663056	+ 37 39' 47" 0	-84.691389	- 84 41' 29" 0	3/1/2013
Effluent Gross	37.663056	+ 37 39' 47" 0	-84.691389	- 84 41' 29" 0	3/1/2013
Effluent Gross	37.663056	+ 37 39' 47" 0	-84.691389	- 84 41' 29" 0	3/1/2013
Effluent Gross	37.663056	+ 37 39' 47" 0	-84.691389	- 84 41' 29" 0	3/1/2013
Effluent Gross	37.663056	+ 37 39' 47" 0	-84.691389	- 84 41' 29" 0	3/1/2013
Effluent Gross	37.663056	+ 37 39' 47" 0	-84.691389	- 84 41' 29" 0	3/1/2013
Effluent Gross	37.663056	+ 37 39' 47" 0	-84.691389	- 84 41' 29" 0	3/1/2013
Effluent Gross	37.663056	+ 37 39' 47" 0	-84.691389	- 84 41' 29" 0	3/1/2013
Effluent Gross	37.663056	+ 37 39' 47" 0	-84.691389	- 84 41' 29" 0	3/1/2013
Effluent Gross	37.663056	+ 37 39' 47" 0	-84.691389	- 84 41' 29" 0	3/1/2013
Effluent Gross	37.663056	+ 37 39' 47" 0	-84.691389	- 84 41' 29" 0	3/1/2013
Effluent Gross	37.663056	+ 37 39' 47" 0	-84.691389	- 84 41' 29" 0	3/1/2013
Effluent Gross	37.663056	+ 37 39' 47" 0	-84.691389	- 84 41' 29" 0	3/1/2013
Effluent Gross	37.663056	+ 37 39' 47" 0	-84.691389	- 84 41' 29" 0	3/1/2013
Effluent Gross	37.663056	+ 37 39' 47" 0	-84.691389	- 84 41' 29" 0	3/1/2013
Effluent Gross	37.663056	+ 37 39' 47" 0	-84.691389	- 84 41' 29" 0	3/1/2013
Effluent Gross	37.663056	+ 37 39' 47" 0	-84.691389	- 84 41' 29" 0	3/1/2013
Effluent Gross	37.663056	+ 37 39' 47" 0	-84.691389	- 84 41' 29" 0	3/1/2013
Effluent Gross	37.663056	+ 37 39' 47" 0	-84.691389	- 84 41' 29" 0	3/1/2013

Effluent Gross	37.663056	+ 37 39' 47" 0	-84.691389	- 84 41' 29" 0	3/1/2013
Effluent Gross	37.663056	+ 37 39' 47" 0	-84.691389	- 84 41' 29" 0	3/1/2013
Effluent Gross	37.663056	+ 37 39' 47" 0	-84.691389	- 84 41' 29" 0	3/1/2013
Effluent Gross	37.663056	+ 37 39' 47" 0	-84.691389	- 84 41' 29" 0	3/1/2013
Effluent Gross	37.663056	+ 37 39' 47" 0	-84.691389	- 84 41' 29" 0	3/1/2013
Effluent Gross	37.663056	+ 37 39' 47" 0	-84.691389	- 84 41' 29" 0	3/1/2013
Effluent Gross	37.663056	+ 37 39' 47" 0	-84.691389	- 84 41' 29" 0	3/1/2013
Effluent Gross	37.663056	+ 37 39' 47" 0	-84.691389	- 84 41' 29" 0	3/1/2013
Effluent Gross	37.663056	+ 37 39' 47" 0	-84.691389	- 84 41' 29" 0	3/1/2013
Effluent Gross	37.663056	+ 37 39' 47" 0	-84.691389	- 84 41' 29" 0	3/1/2013
Effluent Gross	37.663056	+ 37 39' 47" 0	-84.691389	- 84 41' 29" 0	3/1/2013
Effluent Gross	37.663056	+ 37 39' 47" 0	-84.691389	- 84 41' 29" 0	3/1/2013
Effluent Gross	37.663056	+ 37 39' 47" 0	-84.691389	- 84 41' 29" 0	3/1/2013
Effluent Gross	37.663056	+ 37 39' 47" 0	-84.691389	- 84 41' 29" 0	3/1/2013
Effluent Gross	37.663056	+ 37 39' 47" 0	-84.691389	- 84 41' 29" 0	3/1/2013
Effluent Gross	37.663056	+ 37 39' 47" 0	-84.691389	- 84 41' 29" 0	3/1/2013
Effluent Gross	37.663056	+ 37 39' 47" 0	-84.691389	- 84 41' 29" 0	3/1/2013
Effluent Gross	37.663056	+ 37 39' 47" 0	-84.691389	- 84 41' 29" 0	3/1/2013
Effluent Gross	37.663056	+ 37 39' 47" 0	-84.691389	- 84 41' 29" 0	3/1/2013
Effluent Gross	37.663056	+ 37 39' 47" 0	-84.691389	- 84 41' 29" 0	3/1/2013
Effluent Gross	37.663056	+ 37 39' 47" 0	-84.691389	- 84 41' 29" 0	3/1/2013
Effluent Gross	37.663056	+ 37 39' 47" 0	-84.691389	- 84 41' 29" 0	3/1/2013
Effluent Gross	37.663056	+ 37 39' 47" 0	-84.691389	- 84 41' 29" 0	3/1/2013
Effluent Gross	37.663056	+ 37 39' 47" 0	-84.691389	- 84 41' 29" 0	3/1/2013
Effluent Gross	37.663056	+ 37 39' 47" 0	-84.691389	- 84 41' 29" 0	3/1/2013
Effluent Gross	37.663056	+ 37 39' 47" 0	-84.691389	- 84 41' 29" 0	3/1/2013
Effluent Gross	37.663056	+ 37 39' 47" 0	-84.691389	- 84 41' 29" 0	3/1/2013
Effluent Gross	37.663056	+ 37 39' 47" 0	-84.691389	- 84 41' 29" 0	3/1/2013
Effluent Gross	37.663056	+ 37 39' 47" 0	-84.691389	- 84 41' 29" 0	3/1/2013
Effluent Gross	37.663056	+ 37 39' 47" 0	-84.691389	- 84 41' 29" 0	3/1/2013
Effluent Gross	37.663056	+ 37 39' 47" 0	-84.691389	- 84 41' 29" 0	3/1/2013
Effluent Gross	37.663056	+ 37 39' 47" 0	-84.691389	- 84 41' 29" 0	3/1/2013
Effluent Gross	37.663056	+ 37 39' 47" 0	-84.691389	- 84 41' 29" 0	3/1/2013
Effluent Gross	37.663056	+ 37 39' 47" 0	-84.691389	- 84 41' 29" 0	3/1/2013
Effluent Gross	37.663056	+ 37 39' 47" 0	-84.691389	- 84 41' 29" 0	3/1/2013
Effluent Gross	37.663056	+ 37 39' 47" 0	-84.691389	- 84 41' 29" 0	3/1/2013
Effluent Gross	37.663056	+ 37 39' 47" 0	-84.691389	- 84 41' 29" 0	3/1/2013
Effluent Gross	37.663056	+ 37 39' 47" 0	-84.691389	- 84 41' 29" 0	3/1/2013
Effluent Gross	37.663056	+ 37 39' 47" 0	-84.691389	- 84 41' 29" 0	3/1/2013
Effluent Gross	37.663056	+ 37 39' 47" 0	-84.691389	- 84 41' 29" 0	3/1/2013
Effluent Gross	37.663056	+ 37 39' 47" 0	-84.691389	- 84 41' 29" 0	3/1/2013

Effluent Gross	37.663056	+ 37 39' 47" 0	-84.691389	- 84 41' 29" 0	3/1/2013
Effluent Gross	37.663056	+ 37 39' 47" 0	-84.691389	- 84 41' 29" 0	3/1/2013
Effluent Gross	37.663056	+ 37 39' 47" 0	-84.691389	- 84 41' 29" 0	3/1/2013
Effluent Gross	37.663056	+ 37 39' 47" 0	-84.691389	- 84 41' 29" 0	3/1/2013
Effluent Gross	37.663056	+ 37 39' 47" 0	-84.691389	- 84 41' 29" 0	3/1/2013
Effluent Gross	37.663056	+ 37 39' 47" 0	-84.691389	- 84 41' 29" 0	3/1/2013
Effluent Gross	37.663056	+ 37 39' 47" 0	-84.691389	- 84 41' 29" 0	3/1/2013
Effluent Gross	37.663056	+ 37 39' 47" 0	-84.691389	- 84 41' 29" 0	3/1/2013
Effluent Gross	37.663056	+ 37 39' 47" 0	-84.691389	- 84 41' 29" 0	3/1/2013
Effluent Gross	37.663056	+ 37 39' 47" 0	-84.691389	- 84 41' 29" 0	3/1/2013
Effluent Gross	37.663056	+ 37 39' 47" 0	-84.691389	- 84 41' 29" 0	3/1/2013
Effluent Gross	37.663056	+ 37 39' 47" 0	-84.691389	- 84 41' 29" 0	3/1/2013
Effluent Gross	37.663056	+ 37 39' 47" 0	-84.691389	- 84 41' 29" 0	3/1/2013
Effluent Gross	37.663056	+ 37 39' 47" 0	-84.691389	- 84 41' 29" 0	3/1/2013
Effluent Gross	37.663056	+ 37 39' 47" 0	-84.691389	- 84 41' 29" 0	3/1/2013
Effluent Gross	37.663056	+ 37 39' 47" 0	-84.691389	- 84 41' 29" 0	3/1/2013
Effluent Gross	37.663056	+ 37 39' 47" 0	-84.691389	- 84 41' 29" 0	3/1/2013
Effluent Gross	37.663056	+ 37 39' 47" 0	-84.691389	- 84 41' 29" 0	3/1/2013
Effluent Gross	37.663056	+ 37 39' 47" 0	-84.691389	- 84 41' 29" 0	3/1/2013
Effluent Gross	37.663056	+ 37 39' 47" 0	-84.691389	- 84 41' 29" 0	3/1/2013
Effluent Gross	37.663056	+ 37 39' 47" 0	-84.691389	- 84 41' 29" 0	3/1/2013
Effluent Gross	37.663056	+ 37 39' 47" 0	-84.691389	- 84 41' 29" 0	3/1/2013
Effluent Gross	37.663056	+ 37 39' 47" 0	-84.691389	- 84 41' 29" 0	3/1/2013
Effluent Gross	37.663056	+ 37 39' 47" 0	-84.691389	- 84 41' 29" 0	3/1/2013
Effluent Gross	37.663056	+ 37 39' 47" 0	-84.691389	- 84 41' 29" 0	3/1/2013
Effluent Gross	37.663056	+ 37 39' 47" 0	-84.691389	- 84 41' 29" 0	3/1/2013
Effluent Gross	37.663056	+ 37 39' 47" 0	-84.691389	- 84 41' 29" 0	3/1/2013
Effluent Gross	37.663056	+ 37 39' 47" 0	-84.691389	- 84 41' 29" 0	3/1/2013
Effluent Gross	37.663056	+ 37 39' 47" 0	-84.691389	- 84 41' 29" 0	3/1/2013
Effluent Gross	37.663056	+ 37 39' 47" 0	-84.691389	- 84 41' 29" 0	3/1/2013
Effluent Gross	37.663056	+ 37 39' 47" 0	-84.691389	- 84 41' 29" 0	3/1/2013
Effluent Gross	37.663056	+ 37 39' 47" 0	-84.691389	- 84 41' 29" 0	3/1/2013
Effluent Gross	37.663056	+ 37 39' 47" 0	-84.691389	- 84 41' 29" 0	3/1/2013
Effluent Gross	37.663056	+ 37 39' 47" 0	-84.691389	- 84 41' 29" 0	3/1/2013
Effluent Gross	37.663056	+ 37 39' 47" 0	-84.691389	- 84 41' 29" 0	3/1/2013
Effluent Gross	37.663056	+ 37 39' 47" 0	-84.691389	- 84 41' 29" 0	3/1/2013
Effluent Gross	37.663056	+ 37 39' 47" 0	-84.691389	- 84 41' 29" 0	3/1/2013
Effluent Gross	37.663056	+ 37 39' 47" 0	-84.691389	- 84 41' 29" 0	3/1/2013
Effluent Gross	37.663056	+ 37 39' 47" 0	-84.691389	- 84 41' 29" 0	3/1/2013
Effluent Gross	37.663056	+ 37 39' 47" 0	-84.691389	- 84 41' 29" 0	3/1/2013
Effluent Gross	37.663056	+ 37 39' 47" 0	-84.691389	- 84 41' 29" 0	3/1/2013
Effluent Gross	37.663056	+ 37 39' 47" 0	-84.691389	- 84 41' 29" 0	3/1/2013
Effluent Gross	37.663056	+ 37 39' 47" 0	-84.691389	- 84 41' 29" 0	3/1/2013
Effluent Gross	37.663056	+ 37 39' 47" 0	-84.691389	- 84 41' 29" 0	3/1/2013
Effluent Gross	37.663056	+ 37 39' 47" 0	-84.691389	- 84 41' 29" 0	3/1/2013
Effluent Gross	37.663056	+ 37 39' 47" 0	-84.691389	- 84 41' 29" 0	3/1/2013
Effluent Gross	37.663056	+ 37 39' 47" 0	-84.691389	- 84 41' 29" 0	3/1/2013
Effluent Gross	37.663056	+ 37 39' 47" 0	-84.691389	- 84 41' 29" 0	3/1/2013
Effluent Gross	37.663056	+ 37 39' 47" 0	-84.691389	- 84 41' 29" 0	3/1/2013
Effluent Gross	37.663056	+ 37 39' 47" 0	-84.691389	- 84 41' 29" 0	3/1/2013
Effluent Gross	37.663056	+ 37 39' 47" 0	-84.691389	- 84 41' 29" 0	3/1/2013
Effluent Gross	37.663056	+ 37 39' 47" 0	-84.691389	- 84 41' 29" 0	3/1/2013
Effluent Gross	37.663056	+ 37 39' 47" 0	-84.691389	- 84 41' 29" 0	3/1/2013
Effluent Gross	37.663056	+ 37 39' 47" 0	-84.691389	- 84 41' 29" 0	3/1/2013
Effluent Gross	37.663056	+ 37 39' 47" 0	-84.691389	- 84 41' 29" 0	3/1/2013

Effluent Gross	37.663056	+ 37 39' 47" 0	-84.691389	- 84 41' 29" 0	3/1/2013
Effluent Gross	37.663056	+ 37 39' 47" 0	-84.691389	- 84 41' 29" 0	3/1/2013
Effluent Gross	37.663056	+ 37 39' 47" 0	-84.691389	- 84 41' 29" 0	3/1/2013
Effluent Gross	37.663056	+ 37 39' 47" 0	-84.691389	- 84 41' 29" 0	3/1/2013
Effluent Gross	37.663056	+ 37 39' 47" 0	-84.691389	- 84 41' 29" 0	3/1/2013
Effluent Gross	37.663056	+ 37 39' 47" 0	-84.691389	- 84 41' 29" 0	3/1/2013
Effluent Gross	37.663056	+ 37 39' 47" 0	-84.691389	- 84 41' 29" 0	3/1/2013
Effluent Gross	37.663056	+ 37 39' 47" 0	-84.691389	- 84 41' 29" 0	3/1/2013
Effluent Gross	37.663056	+ 37 39' 47" 0	-84.691389	- 84 41' 29" 0	3/1/2013
Effluent Gross	37.663056	+ 37 39' 47" 0	-84.691389	- 84 41' 29" 0	3/1/2013
Effluent Gross	37.663056	+ 37 39' 47" 0	-84.691389	- 84 41' 29" 0	3/1/2013
Effluent Gross	37.663056	+ 37 39' 47" 0	-84.691389	- 84 41' 29" 0	3/1/2013
Effluent Gross	37.663056	+ 37 39' 47" 0	-84.691389	- 84 41' 29" 0	3/1/2013
Effluent Gross	37.663056	+ 37 39' 47" 0	-84.691389	- 84 41' 29" 0	3/1/2013
Effluent Gross	37.663056	+ 37 39' 47" 0	-84.691389	- 84 41' 29" 0	3/1/2013
Effluent Gross	37.663056	+ 37 39' 47" 0	-84.691389	- 84 41' 29" 0	3/1/2013
Effluent Gross	37.663056	+ 37 39' 47" 0	-84.691389	- 84 41' 29" 0	3/1/2013
Effluent Gross	37.663056	+ 37 39' 47" 0	-84.691389	- 84 41' 29" 0	3/1/2013
Effluent Gross	37.663056	+ 37 39' 47" 0	-84.691389	- 84 41' 29" 0	3/1/2013
Effluent Gross	37.663056	+ 37 39' 47" 0	-84.691389	- 84 41' 29" 0	3/1/2013
Effluent Gross	37.663056	+ 37 39' 47" 0	-84.691389	- 84 41' 29" 0	3/1/2013
Effluent Gross	37.663056	+ 37 39' 47" 0	-84.691389	- 84 41' 29" 0	3/1/2013
Effluent Gross	37.663056	+ 37 39' 47" 0	-84.691389	- 84 41' 29" 0	3/1/2013
Effluent Gross	37.663056	+ 37 39' 47" 0	-84.691389	- 84 41' 29" 0	3/1/2013
Effluent Gross	37.663056	+ 37 39' 47" 0	-84.691389	- 84 41' 29" 0	3/1/2013
Effluent Gross	37.663056	+ 37 39' 47" 0	-84.691389	- 84 41' 29" 0	3/1/2013
Effluent Gross	37.663056	+ 37 39' 47" 0	-84.691389	- 84 41' 29" 0	3/1/2013
Effluent Gross	37.663056	+ 37 39' 47" 0	-84.691389	- 84 41' 29" 0	3/1/2013
Effluent Gross	37.663056	+ 37 39' 47" 0	-84.691389	- 84 41' 29" 0	3/1/2013
Effluent Gross	37.663056	+ 37 39' 47" 0	-84.691389	- 84 41' 29" 0	3/1/2013
Effluent Gross	37.663056	+ 37 39' 47" 0	-84.691389	- 84 41' 29" 0	3/1/2013
Effluent Gross	37.663056	+ 37 39' 47" 0	-84.691389	- 84 41' 29" 0	3/1/2013
Effluent Gross	37.663056	+ 37 39' 47" 0	-84.691389	- 84 41' 29" 0	3/1/2013
Effluent Gross	37.663056	+ 37 39' 47" 0	-84.691389	- 84 41' 29" 0	3/1/2013
Effluent Gross	37.663056	+ 37 39' 47" 0	-84.691389	- 84 41' 29" 0	3/1/2013
Effluent Gross	37.663056	+ 37 39' 47" 0	-84.691389	- 84 41' 29" 0	3/1/2013
Effluent Gross	37.663056	+ 37 39' 47" 0	-84.691389	- 84 41' 29" 0	3/1/2013
Effluent Gross	37.663056	+ 37 39' 47" 0	-84.691389	- 84 41' 29" 0	3/1/2013
Effluent Gross	37.663056	+ 37 39' 47" 0	-84.691389	- 84 41' 29" 0	3/1/2013
Effluent Gross	37.663056	+ 37 39' 47" 0	-84.691389	- 84 41' 29" 0	3/1/2013
Effluent Gross	37.663056	+ 37 39' 47" 0	-84.691389	- 84 41' 29" 0	3/1/2013

Effluent Gross	37.663056	+ 37 39' 47" 0	-84.691389	- 84 41' 29" 0	3/1/2013
Effluent Gross	37.663056	+ 37 39' 47" 0	-84.691389	- 84 41' 29" 0	3/1/2013
Effluent Gross	37.663056	+ 37 39' 47" 0	-84.691389	- 84 41' 29" 0	3/1/2013
Effluent Gross	37.663056	+ 37 39' 47" 0	-84.691389	- 84 41' 29" 0	3/1/2013
Effluent Gross	37.663056	+ 37 39' 47" 0	-84.691389	- 84 41' 29" 0	3/1/2013
Effluent Gross	37.663056	+ 37 39' 47" 0	-84.691389	- 84 41' 29" 0	3/1/2013
Effluent Gross	37.663056	+ 37 39' 47" 0	-84.691389	- 84 41' 29" 0	3/1/2013
Effluent Gross	37.663056	+ 37 39' 47" 0	-84.691389	- 84 41' 29" 0	3/1/2013
Effluent Gross	37.663056	+ 37 39' 47" 0	-84.691389	- 84 41' 29" 0	3/1/2013
Effluent Gross	37.663056	+ 37 39' 47" 0	-84.691389	- 84 41' 29" 0	3/1/2013
Effluent Gross	37.663056	+ 37 39' 47" 0	-84.691389	- 84 41' 29" 0	3/1/2013
Effluent Gross	37.663056	+ 37 39' 47" 0	-84.691389	- 84 41' 29" 0	3/1/2013
Effluent Gross	37.663056	+ 37 39' 47" 0	-84.691389	- 84 41' 29" 0	3/1/2013
Effluent Gross	37.663056	+ 37 39' 47" 0	-84.691389	- 84 41' 29" 0	3/1/2013
Effluent Gross	37.663056	+ 37 39' 47" 0	-84.691389	- 84 41' 29" 0	3/1/2013
Effluent Gross	37.663056	+ 37 39' 47" 0	-84.691389	- 84 41' 29" 0	3/1/2013
Effluent Gross	37.663056	+ 37 39' 47" 0	-84.691389	- 84 41' 29" 0	3/1/2013
Effluent Gross	37.663056	+ 37 39' 47" 0	-84.691389	- 84 41' 29" 0	3/1/2013
Effluent Gross	37.663056	+ 37 39' 47" 0	-84.691389	- 84 41' 29" 0	3/1/2013
Effluent Gross	37.663056	+ 37 39' 47" 0	-84.691389	- 84 41' 29" 0	3/1/2013
Effluent Gross	37.663056	+ 37 39' 47" 0	-84.691389	- 84 41' 29" 0	3/1/2013
Effluent Gross	37.663056	+ 37 39' 47" 0	-84.691389	- 84 41' 29" 0	3/1/2013
Effluent Gross	37.663056	+ 37 39' 47" 0	-84.691389	- 84 41' 29" 0	3/1/2013
Effluent Gross	37.663056	+ 37 39' 47" 0	-84.691389	- 84 41' 29" 0	3/1/2013
Effluent Gross	37.663056	+ 37 39' 47" 0	-84.691389	- 84 41' 29" 0	3/1/2013
Effluent Gross	37.663056	+ 37 39' 47" 0	-84.691389	- 84 41' 29" 0	3/1/2013
Effluent Gross	37.663056	+ 37 39' 47" 0	-84.691389	- 84 41' 29" 0	3/1/2013
Effluent Gross	37.663056	+ 37 39' 47" 0	-84.691389	- 84 41' 29" 0	3/1/2013
Effluent Gross	37.663056	+ 37 39' 47" 0	-84.691389	- 84 41' 29" 0	3/1/2013
Effluent Gross	37.663056	+ 37 39' 47" 0	-84.691389	- 84 41' 29" 0	3/1/2013
Effluent Gross	37.663056	+ 37 39' 47" 0	-84.691389	- 84 41' 29" 0	3/1/2013
Effluent Gross	37.663056	+ 37 39' 47" 0	-84.691389	- 84 41' 29" 0	3/1/2013
Effluent Gross	37.663056	+ 37 39' 47" 0	-84.691389	- 84 41' 29" 0	3/1/2013
Effluent Gross	37.663056	+ 37 39' 47" 0	-84.691389	- 84 41' 29" 0	3/1/2013
Effluent Gross	37.663056	+ 37 39' 47" 0	-84.691389	- 84 41' 29" 0	3/1/2013
Effluent Gross	37.663056	+ 37 39' 47" 0	-84.691389	- 84 41' 29" 0	3/1/2013
Effluent Gross	37.663056	+ 37 39' 47" 0	-84.691389	- 84 41' 29" 0	3/1/2013
Effluent Gross	37.663056	+ 37 39' 47" 0	-84.691389	- 84 41' 29" 0	3/1/2013
Effluent Gross	37.663056	+ 37 39' 47" 0	-84.691389	- 84 41' 29" 0	3/1/2013
Effluent Gross	37.663056	+ 37 39' 47" 0	-84.691389	- 84 41' 29" 0	3/1/2013
Effluent Gross	37.663056	+ 37 39' 47" 0	-84.691389	- 84 41' 29" 0	3/1/2013
Effluent Gross	37.663056	+ 37 39' 47" 0	-84.691389	- 84 41' 29" 0	3/1/2013
Effluent Gross	37.663056	+ 37 39' 47" 0	-84.691389	- 84 41' 29" 0	3/1/2013
Effluent Gross	37.663056	+ 37 39' 47" 0	-84.691389	- 84 41' 29" 0	3/1/2013
Effluent Gross	37.663056	+ 37 39' 47" 0	-84.691389	- 84 41' 29" 0	3/1/2013
Effluent Gross	37.663056	+ 37 39' 47" 0	-84.691389	- 84 41' 29" 0	3/1/2013
Effluent Gross	37.663056	+ 37 39' 47" 0	-84.691389	- 84 41' 29" 0	3/1/2013
Effluent Gross	37.663056	+ 37 39' 47" 0	-84.691389	- 84 41' 29" 0	3/1/2013
Effluent Gross	37.663056	+ 37 39' 47" 0	-84.691389	- 84 41' 29" 0	3/1/2013
Effluent Gross	37.663056	+ 37 39' 47" 0	-84.691389	- 84 41' 29" 0	3/1/2013
Effluent Gross	37.663056	+ 37 39' 47" 0	-84.691389	- 84 41' 29" 0	3/1/2013
Effluent Gross	37.663056	+ 37 39' 47" 0	-84.691389	- 84 41' 29" 0	3/1/2013
Effluent Gross	37.663056	+ 37 39' 47" 0	-84.691389	- 84 41' 29" 0	3/1/2013
Effluent Gross	37.663056	+ 37 39' 47" 0	-84.691389	- 84 41' 29" 0	3/1/2013
Effluent Gross	37.663056	+ 37 39' 47" 0	-84.691389	- 84 41' 29" 0	3/1/2013

Effluent Gross	37.663056	+ 37 39' 47" 0	-84.691389	- 84 41' 29" 0	3/1/2013
Effluent Gross	37.663056	+ 37 39' 47" 0	-84.691389	- 84 41' 29" 0	3/1/2013
Effluent Gross	37.663056	+ 37 39' 47" 0	-84.691389	- 84 41' 29" 0	3/1/2013
Effluent Gross	37.663056	+ 37 39' 47" 0	-84.691389	- 84 41' 29" 0	3/1/2013
Effluent Gross	37.663056	+ 37 39' 47" 0	-84.691389	- 84 41' 29" 0	3/1/2013
Effluent Gross	37.663056	+ 37 39' 47" 0	-84.691389	- 84 41' 29" 0	3/1/2013
Effluent Gross	37.663056	+ 37 39' 47" 0	-84.691389	- 84 41' 29" 0	3/1/2013
Effluent Gross	37.663056	+ 37 39' 47" 0	-84.691389	- 84 41' 29" 0	3/1/2013
Effluent Gross	37.663056	+ 37 39' 47" 0	-84.691389	- 84 41' 29" 0	3/1/2013
Effluent Gross	37.663056	+ 37 39' 47" 0	-84.691389	- 84 41' 29" 0	3/1/2013
Effluent Gross	37.663056	+ 37 39' 47" 0	-84.691389	- 84 41' 29" 0	3/1/2013
Effluent Gross	37.663056	+ 37 39' 47" 0	-84.691389	- 84 41' 29" 0	3/1/2013
Effluent Gross	37.663056	+ 37 39' 47" 0	-84.691389	- 84 41' 29" 0	3/1/2013
Effluent Gross	37.663056	+ 37 39' 47" 0	-84.691389	- 84 41' 29" 0	3/1/2013
Effluent Gross	37.663056	+ 37 39' 47" 0	-84.691389	- 84 41' 29" 0	3/1/2013
Effluent Gross	37.663056	+ 37 39' 47" 0	-84.691389	- 84 41' 29" 0	3/1/2013
Effluent Gross	37.663056	+ 37 39' 47" 0	-84.691389	- 84 41' 29" 0	3/1/2013
Effluent Gross	37.663056	+ 37 39' 47" 0	-84.691389	- 84 41' 29" 0	3/1/2013
Effluent Gross	37.663056	+ 37 39' 47" 0	-84.691389	- 84 41' 29" 0	3/1/2013
Effluent Gross	37.663056	+ 37 39' 47" 0	-84.691389	- 84 41' 29" 0	3/1/2013
Effluent Gross	37.663056	+ 37 39' 47" 0	-84.691389	- 84 41' 29" 0	3/1/2013
Effluent Gross	37.663056	+ 37 39' 47" 0	-84.691389	- 84 41' 29" 0	3/1/2013
Effluent Gross	37.663056	+ 37 39' 47" 0	-84.691389	- 84 41' 29" 0	3/1/2013
Effluent Gross	37.663056	+ 37 39' 47" 0	-84.691389	- 84 41' 29" 0	3/1/2013
Effluent Gross	37.663056	+ 37 39' 47" 0	-84.691389	- 84 41' 29" 0	3/1/2013
Effluent Gross	37.663056	+ 37 39' 47" 0	-84.691389	- 84 41' 29" 0	3/1/2013
Effluent Gross	37.663056	+ 37 39' 47" 0	-84.691389	- 84 41' 29" 0	3/1/2013
Effluent Gross	37.663056	+ 37 39' 47" 0	-84.691389	- 84 41' 29" 0	3/1/2013
Effluent Gross	37.663056	+ 37 39' 47" 0	-84.691389	- 84 41' 29" 0	3/1/2013
Effluent Gross	37.663056	+ 37 39' 47" 0	-84.691389	- 84 41' 29" 0	3/1/2013
Effluent Gross	37.663056	+ 37 39' 47" 0	-84.691389	- 84 41' 29" 0	3/1/2013
Effluent Gross	37.663056	+ 37 39' 47" 0	-84.691389	- 84 41' 29" 0	3/1/2013
Effluent Gross	37.663056	+ 37 39' 47" 0	-84.691389	- 84 41' 29" 0	3/1/2013
Effluent Gross	37.663056	+ 37 39' 47" 0	-84.691389	- 84 41' 29" 0	3/1/2013
Effluent Gross	37.663056	+ 37 39' 47" 0	-84.691389	- 84 41' 29" 0	3/1/2013
Effluent Gross	37.663056	+ 37 39' 47" 0	-84.691389	- 84 41' 29" 0	3/1/2013
Effluent Gross	37.663056	+ 37 39' 47" 0	-84.691389	- 84 41' 29" 0	3/1/2013
Effluent Gross	37.663056	+ 37 39' 47" 0	-84.691389	- 84 41' 29" 0	3/1/2013
Effluent Gross	37.663056	+ 37 39' 47" 0	-84.691389	- 84 41' 29" 0	3/1/2013
Effluent Gross	37.663056	+ 37 39' 47" 0	-84.691389	- 84 41' 29" 0	3/1/2013
Effluent Gross	37.663056	+ 37 39' 47" 0	-84.691389	- 84 41' 29" 0	3/1/2013

Effluent Gross	37.663056	+ 37 39' 47" 0	-84.691389	- 84 41' 29" 0	3/1/2013
Effluent Gross	37.663056	+ 37 39' 47" 0	-84.691389	- 84 41' 29" 0	3/1/2013
Effluent Gross	37.663056	+ 37 39' 47" 0	-84.691389	- 84 41' 29" 0	3/1/2013
Effluent Gross	37.663056	+ 37 39' 47" 0	-84.691389	- 84 41' 29" 0	3/1/2013
Effluent Gross	37.663056	+ 37 39' 47" 0	-84.691389	- 84 41' 29" 0	3/1/2013
Effluent Gross	37.663056	+ 37 39' 47" 0	-84.691389	- 84 41' 29" 0	3/1/2013
Effluent Gross	37.663056	+ 37 39' 47" 0	-84.691389	- 84 41' 29" 0	3/1/2013
Effluent Gross	37.663056	+ 37 39' 47" 0	-84.691389	- 84 41' 29" 0	3/1/2013
Effluent Gross	37.663056	+ 37 39' 47" 0	-84.691389	- 84 41' 29" 0	3/1/2013
Effluent Gross	37.663056	+ 37 39' 47" 0	-84.691389	- 84 41' 29" 0	3/1/2013
Effluent Gross	37.663056	+ 37 39' 47" 0	-84.691389	- 84 41' 29" 0	3/1/2013
Effluent Gross	37.663056	+ 37 39' 47" 0	-84.691389	- 84 41' 29" 0	3/1/2013
Effluent Gross	37.663056	+ 37 39' 47" 0	-84.691389	- 84 41' 29" 0	3/1/2013
Effluent Gross	37.663056	+ 37 39' 47" 0	-84.691389	- 84 41' 29" 0	3/1/2013
Effluent Gross	37.663056	+ 37 39' 47" 0	-84.691389	- 84 41' 29" 0	3/1/2013
Effluent Gross	37.663056	+ 37 39' 47" 0	-84.691389	- 84 41' 29" 0	3/1/2013
Effluent Gross	37.663056	+ 37 39' 47" 0	-84.691389	- 84 41' 29" 0	3/1/2013
Effluent Gross	37.663056	+ 37 39' 47" 0	-84.691389	- 84 41' 29" 0	3/1/2013
Effluent Gross	37.663056	+ 37 39' 47" 0	-84.691389	- 84 41' 29" 0	3/1/2013
Effluent Gross	37.663056	+ 37 39' 47" 0	-84.691389	- 84 41' 29" 0	3/1/2013
Effluent Gross	37.663056	+ 37 39' 47" 0	-84.691389	- 84 41' 29" 0	3/1/2013
Effluent Gross	37.663056	+ 37 39' 47" 0	-84.691389	- 84 41' 29" 0	3/1/2013
Effluent Gross	37.663056	+ 37 39' 47" 0	-84.691389	- 84 41' 29" 0	3/1/2013
Effluent Gross	37.663056	+ 37 39' 47" 0	-84.691389	- 84 41' 29" 0	3/1/2013
Effluent Gross	37.663056	+ 37 39' 47" 0	-84.691389	- 84 41' 29" 0	3/1/2013
Effluent Gross	37.663056	+ 37 39' 47" 0	-84.691389	- 84 41' 29" 0	3/1/2013
Effluent Gross	37.663056	+ 37 39' 47" 0	-84.691389	- 84 41' 29" 0	3/1/2013
Effluent Gross	37.663056	+ 37 39' 47" 0	-84.691389	- 84 41' 29" 0	3/1/2013
Effluent Gross	37.663056	+ 37 39' 47" 0	-84.691389	- 84 41' 29" 0	3/1/2013
Effluent Gross	37.663056	+ 37 39' 47" 0	-84.691389	- 84 41' 29" 0	3/1/2013
Effluent Gross	37.663056	+ 37 39' 47" 0	-84.691389	- 84 41' 29" 0	3/1/2013
Effluent Gross	37.663056	+ 37 39' 47" 0	-84.691389	- 84 41' 29" 0	3/1/2013
Effluent Gross	37.663056	+ 37 39' 47" 0	-84.691389	- 84 41' 29" 0	3/1/2013
Effluent Gross	37.663056	+ 37 39' 47" 0	-84.691389	- 84 41' 29" 0	3/1/2013
Effluent Gross	37.663056	+ 37 39' 47" 0	-84.691389	- 84 41' 29" 0	3/1/2013
Effluent Gross	37.663056	+ 37 39' 47" 0	-84.691389	- 84 41' 29" 0	3/1/2013
Effluent Gross	37.663056	+ 37 39' 47" 0	-84.691389	- 84 41' 29" 0	3/1/2013
Effluent Gross	37.663056	+ 37 39' 47" 0	-84.691389	- 84 41' 29" 0	3/1/2013
Effluent Gross	37.663056	+ 37 39' 47" 0	-84.691389	- 84 41' 29" 0	3/1/2013
Effluent Gross	37.663056	+ 37 39' 47" 0	-84.691389	- 84 41' 29" 0	3/1/2013
Effluent Gross	37.663056	+ 37 39' 47" 0	-84.691389	- 84 41' 29" 0	3/1/2013
Effluent Gross	37.663056	+ 37 39' 47" 0	-84.691389	- 84 41' 29" 0	3/1/2013
Effluent Gross	37.663056	+ 37 39' 47" 0	-84.691389	- 84 41' 29" 0	3/1/2013
Effluent Gross	37.663056	+ 37 39' 47" 0	-84.691389	- 84 41' 29" 0	3/1/2013
Effluent Gross	37.663056	+ 37 39' 47" 0	-84.691389	- 84 41' 29" 0	3/1/2013
Effluent Gross	37.663056	+ 37 39' 47" 0	-84.691389	- 84 41' 29" 0	3/1/2013
Effluent Gross	37.663056	+ 37 39' 47" 0	-84.691389	- 84 41' 29" 0	3/1/2013
Effluent Gross	37.663056	+ 37 39' 47" 0	-84.691389	- 84 41' 29" 0	3/1/2013
Effluent Gross	37.663056	+ 37 39' 47" 0	-84.691389	- 84 41' 29" 0	3/1/2013
Effluent Gross	37.663056	+ 37 39' 47" 0	-84.691389	- 84 41' 29" 0	3/1/2013
Effluent Gross	37.663056	+ 37 39' 47" 0	-84.691389	- 84 41' 29" 0	3/1/2013
Effluent Gross	37.663056	+ 37 39' 47" 0	-84.691389	- 84 41' 29" 0	3/1/2013
Effluent Gross	37.663056	+ 37 39' 47" 0	-84.691389	- 84 41' 29" 0	3/1/2013
Effluent Gross	37.663056	+ 37 39' 47" 0	-84.691389	- 84 41' 29" 0	3/1/2013
Effluent Gross	37.663056	+ 37 39' 47" 0	-84.691389	- 84 41' 29" 0	3/1/2013

Effluent Gross	37.663056	+ 37 39' 47" 0	-84.691389	- 84 41' 29" 0	3/1/2013
Effluent Gross	37.663056	+ 37 39' 47" 0	-84.691389	- 84 41' 29" 0	3/1/2013
Effluent Gross	37.663056	+ 37 39' 47" 0	-84.691389	- 84 41' 29" 0	3/1/2013
Effluent Gross	37.663056	+ 37 39' 47" 0	-84.691389	- 84 41' 29" 0	3/1/2013
Effluent Gross	37.663056	+ 37 39' 47" 0	-84.691389	- 84 41' 29" 0	3/1/2013
Effluent Gross	37.663056	+ 37 39' 47" 0	-84.691389	- 84 41' 29" 0	3/1/2013
Effluent Gross	37.663056	+ 37 39' 47" 0	-84.691389	- 84 41' 29" 0	3/1/2013
Effluent Gross	37.663056	+ 37 39' 47" 0	-84.691389	- 84 41' 29" 0	3/1/2013

Limit End Date	Parameter Code	Limit Season ID	Parameter Desc	nit Sample Type Co	equency of Analys
7/31/2023	00300	0	Oxygen, dissolved [	GR	01/90
7/31/2023	00310	0	BOD, 5-day, 20 deg	CP	01/90
7/31/2023	00310	0	BOD, 5-day, 20 deg	CP	01/90
7/31/2023	00400	0	pH	GR	01/90
7/31/2023	00400	0	pH	GR	01/90
7/31/2023	00530	0	Solids, total suspen	CP	01/90
7/31/2023	00530	0	Solids, total suspen	CP	01/90
7/31/2023	00600	0	Nitrogen, total [as N	CP	01/90
7/31/2023	00600	0	Nitrogen, total [as N	CP	01/90
7/31/2023	00610	0	Nitrogen, ammonia	CP	01/90
7/31/2023	00610	0	Nitrogen, ammonia	CP	01/90
7/31/2023	00665	0	Phosphorus, total [a	CP	01/90
7/31/2023	00665	0	Phosphorus, total [a	CP	01/90
7/31/2023	50050	0	Flow, in conduit or tl	IN	01/90
7/31/2023	50050	0	Flow, in conduit or tl	IN	01/90
7/31/2023	50060	0	Chlorine, total residu	GR	01/90
7/31/2023	50060	0	Chlorine, total residu	GR	01/90
7/31/2023	51040	0	E. coli	GR	01/90
7/31/2023	51040	0	E. coli	GR	01/90
2/28/2018	00300	0	Oxygen, dissolved [	GR	01/90
2/28/2018	00300	0	Oxygen, dissolved [	GR	01/90
2/28/2018	00300	0	Oxygen, dissolved [	GR	01/90
2/28/2018	00300	0	Oxygen, dissolved [	GR	01/90
2/28/2018	00300	0	Oxygen, dissolved [	GR	01/90
2/28/2018	00300	0	Oxygen, dissolved [	GR	01/90
2/28/2018	00300	0	Oxygen, dissolved [	GR	01/90
2/28/2018	00300	0	Oxygen, dissolved [	GR	01/90
2/28/2018	00300	0	Oxygen, dissolved [	GR	01/90
2/28/2018	00300	0	Oxygen, dissolved [	GR	01/90
2/28/2018	00310	0	BOD, 5-day, 20 deg	24	01/90
2/28/2018	00310	0	BOD, 5-day, 20 deg	24	01/90
2/28/2018	00310	0	BOD, 5-day, 20 deg	24	01/90
2/28/2018	00310	0	BOD, 5-day, 20 deg	24	01/90
2/28/2018	00310	0	BOD, 5-day, 20 deg	24	01/90
2/28/2018	00310	0	BOD, 5-day, 20 deg	24	01/90
2/28/2018	00310	0	BOD, 5-day, 20 deg	24	01/90
2/28/2018	00310	0	BOD, 5-day, 20 deg	24	01/90
2/28/2018	00310	0	BOD, 5-day, 20 deg	24	01/90
2/28/2018	00310	0	BOD, 5-day, 20 deg	24	01/90

2/28/2018	00310	0	BOD, 5-day, 20 deg	24	01/90
2/28/2018	00310	0	BOD, 5-day, 20 deg	24	01/90
2/28/2018	00310	0	BOD, 5-day, 20 deg	24	01/90
2/28/2018	00310	0	BOD, 5-day, 20 deg	24	01/90
2/28/2018	00310	0	BOD, 5-day, 20 deg	24	01/90
2/28/2018	00310	0	BOD, 5-day, 20 deg	24	01/90
2/28/2018	00310	0	BOD, 5-day, 20 deg	24	01/90
2/28/2018	00310	0	BOD, 5-day, 20 deg	24	01/90
2/28/2018	00310	0	BOD, 5-day, 20 deg	24	01/90
2/28/2018	00310	0	BOD, 5-day, 20 deg	24	01/90
2/28/2018	00310	0	BOD, 5-day, 20 deg	24	01/90
2/28/2018	00310	0	BOD, 5-day, 20 deg	24	01/90
2/28/2018	00310	0	BOD, 5-day, 20 deg	24	01/90
2/28/2018	00310	0	BOD, 5-day, 20 deg	24	01/90
2/28/2018	00310	0	BOD, 5-day, 20 deg	24	01/90
2/28/2018	00310	0	BOD, 5-day, 20 deg	24	01/90
2/28/2018	00310	0	BOD, 5-day, 20 deg	24	01/90
2/28/2018	00310	0	BOD, 5-day, 20 deg	24	01/90
2/28/2018	00310	0	BOD, 5-day, 20 deg	24	01/90
2/28/2018	00310	0	BOD, 5-day, 20 deg	24	01/90
2/28/2018	00310	0	BOD, 5-day, 20 deg	24	01/90
2/28/2018	00310	0	BOD, 5-day, 20 deg	24	01/90
2/28/2018	00310	0	BOD, 5-day, 20 deg	24	01/90
2/28/2018	00310	0	BOD, 5-day, 20 deg	24	01/90
2/28/2018	00310	0	BOD, 5-day, 20 deg	24	01/90
2/28/2018	00310	0	BOD, 5-day, 20 deg	24	01/90
2/28/2018	00310	0	BOD, 5-day, 20 deg	24	01/90
2/28/2018	00310	0	BOD, 5-day, 20 deg	24	01/90
2/28/2018	00310	0	BOD, 5-day, 20 deg	24	01/90
2/28/2018	00310	0	BOD, 5-day, 20 deg	24	01/90
2/28/2018	00310	0	BOD, 5-day, 20 deg	24	01/90
2/28/2018	00310	0	BOD, 5-day, 20 deg	24	01/90
2/28/2018	00400	0	pH	GR	01/90
2/28/2018	00400	0	pH	GR	01/90
2/28/2018	00400	0	pH	GR	01/90
2/28/2018	00400	0	pH	GR	01/90
2/28/2018	00400	0	pH	GR	01/90
2/28/2018	00400	0	pH	GR	01/90
2/28/2018	00400	0	pH	GR	01/90

2/28/2018	00400	0	pH	GR	01/90
2/28/2018	00400	0	pH	GR	01/90
2/28/2018	00400	0	pH	GR	01/90
2/28/2018	00400	0	pH	GR	01/90
2/28/2018	00400	0	pH	GR	01/90
2/28/2018	00400	0	pH	GR	01/90
2/28/2018	00400	0	pH	GR	01/90
2/28/2018	00400	0	pH	GR	01/90
2/28/2018	00400	0	pH	GR	01/90
2/28/2018	00400	0	pH	GR	01/90
2/28/2018	00400	0	pH	GR	01/90
2/28/2018	00400	0	pH	GR	01/90
2/28/2018	00400	0	pH	GR	01/90
2/28/2018	00400	0	pH	GR	01/90
2/28/2018	00530	0	Solids, total suspen	24	01/90
2/28/2018	00530	0	Solids, total suspen	24	01/90
2/28/2018	00530	0	Solids, total suspen	24	01/90
2/28/2018	00530	0	Solids, total suspen	24	01/90
2/28/2018	00530	0	Solids, total suspen	24	01/90
2/28/2018	00530	0	Solids, total suspen	24	01/90
2/28/2018	00530	0	Solids, total suspen	24	01/90
2/28/2018	00530	0	Solids, total suspen	24	01/90
2/28/2018	00530	0	Solids, total suspen	24	01/90
2/28/2018	00530	0	Solids, total suspen	24	01/90
2/28/2018	00530	0	Solids, total suspen	24	01/90
2/28/2018	00530	0	Solids, total suspen	24	01/90
2/28/2018	00530	0	Solids, total suspen	24	01/90
2/28/2018	00530	0	Solids, total suspen	24	01/90
2/28/2018	00530	0	Solids, total suspen	24	01/90
2/28/2018	00530	0	Solids, total suspen	24	01/90
2/28/2018	00530	0	Solids, total suspen	24	01/90
2/28/2018	00530	0	Solids, total suspen	24	01/90
2/28/2018	00530	0	Solids, total suspen	24	01/90
2/28/2018	00530	0	Solids, total suspen	24	01/90
2/28/2018	00530	0	Solids, total suspen	24	01/90
2/28/2018	00530	0	Solids, total suspen	24	01/90
2/28/2018	00530	0	Solids, total suspen	24	01/90
2/28/2018	00530	0	Solids, total suspen	24	01/90
2/28/2018	00530	0	Solids, total suspen	24	01/90
2/28/2018	00530	0	Solids, total suspen	24	01/90
2/28/2018	00530	0	Solids, total suspen	24	01/90
2/28/2018	00530	0	Solids, total suspen	24	01/90

2/28/2018	00530	0	Solids, total suspen	24	01/90
2/28/2018	00530	0	Solids, total suspen	24	01/90
2/28/2018	00530	0	Solids, total suspen	24	01/90
2/28/2018	00530	0	Solids, total suspen	24	01/90
2/28/2018	00530	0	Solids, total suspen	24	01/90
2/28/2018	00530	0	Solids, total suspen	24	01/90
2/28/2018	00530	0	Solids, total suspen	24	01/90
2/28/2018	00530	0	Solids, total suspen	24	01/90
2/28/2018	00530	0	Solids, total suspen	24	01/90
2/28/2018	00530	0	Solids, total suspen	24	01/90
2/28/2018	00530	0	Solids, total suspen	24	01/90
2/28/2018	00530	0	Solids, total suspen	24	01/90
2/28/2018	00530	0	Solids, total suspen	24	01/90
2/28/2018	00530	0	Solids, total suspen	24	01/90
2/28/2018	00530	0	Solids, total suspen	24	01/90
2/28/2018	00530	0	Solids, total suspen	24	01/90
2/28/2018	00530	0	Solids, total suspen	24	01/90
2/28/2018	00530	0	Solids, total suspen	24	01/90
2/28/2018	00530	0	Solids, total suspen	24	01/90
2/28/2018	00600	0	Nitrogen, total [as N	24	01/90
2/28/2018	00600	0	Nitrogen, total [as N	24	01/90
2/28/2018	00600	0	Nitrogen, total [as N	24	01/90
2/28/2018	00600	0	Nitrogen, total [as N	24	01/90
2/28/2018	00600	0	Nitrogen, total [as N	24	01/90
2/28/2018	00600	0	Nitrogen, total [as N	24	01/90
2/28/2018	00600	0	Nitrogen, total [as N	24	01/90
2/28/2018	00600	0	Nitrogen, total [as N	24	01/90
2/28/2018	00600	0	Nitrogen, total [as N	24	01/90
2/28/2018	00600	0	Nitrogen, total [as N	24	01/90
2/28/2018	00600	0	Nitrogen, total [as N	24	01/90
2/28/2018	00600	0	Nitrogen, total [as N	24	01/90
2/28/2018	00600	0	Nitrogen, total [as N	24	01/90
2/28/2018	00600	0	Nitrogen, total [as N	24	01/90
2/28/2018	00600	0	Nitrogen, total [as N	24	01/90
2/28/2018	00600	0	Nitrogen, total [as N	24	01/90
2/28/2018	00600	0	Nitrogen, total [as N	24	01/90
2/28/2018	00600	0	Nitrogen, total [as N	24	01/90
2/28/2018	00600	0	Nitrogen, total [as N	24	01/90
2/28/2018	00600	0	Nitrogen, total [as N	24	01/90
2/28/2018	00600	0	Nitrogen, total [as N	24	01/90
2/28/2018	00600	0	Nitrogen, total [as N	24	01/90
2/28/2018	00610	0	Nitrogen, ammonia	24	01/90

2/28/2018	00610	0	Nitrogen, ammonia t	24	01/90
2/28/2018	00610	0	Nitrogen, ammonia t	24	01/90
2/28/2018	00610	0	Nitrogen, ammonia t	24	01/90
2/28/2018	00610	0	Nitrogen, ammonia t	24	01/90
2/28/2018	00610	0	Nitrogen, ammonia t	24	01/90
2/28/2018	00610	0	Nitrogen, ammonia t	24	01/90
2/28/2018	00610	0	Nitrogen, ammonia t	24	01/90
2/28/2018	00610	0	Nitrogen, ammonia t	24	01/90
2/28/2018	00610	0	Nitrogen, ammonia t	24	01/90
2/28/2018	00610	0	Nitrogen, ammonia t	24	01/90
2/28/2018	00610	0	Nitrogen, ammonia t	24	01/90
2/28/2018	00610	0	Nitrogen, ammonia t	24	01/90
2/28/2018	00610	0	Nitrogen, ammonia t	24	01/90
2/28/2018	00610	0	Nitrogen, ammonia t	24	01/90
2/28/2018	00610	0	Nitrogen, ammonia t	24	01/90
2/28/2018	00610	0	Nitrogen, ammonia t	24	01/90
2/28/2018	00610	0	Nitrogen, ammonia t	24	01/90
2/28/2018	00610	0	Nitrogen, ammonia t	24	01/90
2/28/2018	00610	0	Nitrogen, ammonia t	24	01/90
2/28/2018	00610	0	Nitrogen, ammonia t	24	01/90
2/28/2018	00610	0	Nitrogen, ammonia t	24	01/90
2/28/2018	00610	0	Nitrogen, ammonia t	24	01/90
2/28/2018	00610	0	Nitrogen, ammonia t	24	01/90
2/28/2018	00610	0	Nitrogen, ammonia t	24	01/90
2/28/2018	00610	0	Nitrogen, ammonia t	24	01/90
2/28/2018	00610	0	Nitrogen, ammonia t	24	01/90
2/28/2018	00610	0	Nitrogen, ammonia t	24	01/90
2/28/2018	00610	0	Nitrogen, ammonia t	24	01/90
2/28/2018	00610	0	Nitrogen, ammonia t	24	01/90
2/28/2018	00610	0	Nitrogen, ammonia t	24	01/90
2/28/2018	00610	0	Nitrogen, ammonia t	24	01/90
2/28/2018	00610	0	Nitrogen, ammonia t	24	01/90
2/28/2018	00610	0	Nitrogen, ammonia t	24	01/90
2/28/2018	00610	0	Nitrogen, ammonia t	24	01/90
2/28/2018	00610	0	Nitrogen, ammonia t	24	01/90
2/28/2018	00610	0	Nitrogen, ammonia t	24	01/90
2/28/2018	00610	0	Nitrogen, ammonia t	24	01/90
2/28/2018	00610	0	Nitrogen, ammonia t	24	01/90
2/28/2018	00610	0	Nitrogen, ammonia t	24	01/90
2/28/2018	00610	0	Nitrogen, ammonia t	24	01/90
2/28/2018	00610	0	Nitrogen, ammonia t	24	01/90

2/28/2018	00610	0	Nitrogen, ammonia	24	01/90
2/28/2018	00610	0	Nitrogen, ammonia	24	01/90
2/28/2018	00665	0	Phosphorus, total [a	24	01/90
2/28/2018	00665	0	Phosphorus, total [a	24	01/90
2/28/2018	00665	0	Phosphorus, total [a	24	01/90
2/28/2018	00665	0	Phosphorus, total [a	24	01/90
2/28/2018	00665	0	Phosphorus, total [a	24	01/90
2/28/2018	00665	0	Phosphorus, total [a	24	01/90
2/28/2018	00665	0	Phosphorus, total [a	24	01/90
2/28/2018	00665	0	Phosphorus, total [a	24	01/90
2/28/2018	00665	0	Phosphorus, total [a	24	01/90
2/28/2018	00665	0	Phosphorus, total [a	24	01/90
2/28/2018	00665	0	Phosphorus, total [a	24	01/90
2/28/2018	00665	0	Phosphorus, total [a	24	01/90
2/28/2018	00665	0	Phosphorus, total [a	24	01/90
2/28/2018	00665	0	Phosphorus, total [a	24	01/90
2/28/2018	00665	0	Phosphorus, total [a	24	01/90
2/28/2018	00665	0	Phosphorus, total [a	24	01/90
2/28/2018	00665	0	Phosphorus, total [a	24	01/90
2/28/2018	00665	0	Phosphorus, total [a	24	01/90
2/28/2018	00665	0	Phosphorus, total [a	24	01/90
2/28/2018	00665	0	Phosphorus, total [a	24	01/90
2/28/2018	00665	0	Phosphorus, total [a	24	01/90
2/28/2018	00665	0	Phosphorus, total [a	24	01/90
2/28/2018	00665	0	Phosphorus, total [a	24	01/90
2/28/2018	00665	0	Phosphorus, total [a	24	01/90
2/28/2018	00665	0	Phosphorus, total [a	24	01/90
2/28/2018	50050	0	Flow, in conduit or tl	IN	01/90
2/28/2018	50050	0	Flow, in conduit or tl	IN	01/90
2/28/2018	50050	0	Flow, in conduit or tl	IN	01/90
2/28/2018	50050	0	Flow, in conduit or tl	IN	01/90
2/28/2018	50050	0	Flow, in conduit or tl	IN	01/90
2/28/2018	50050	0	Flow, in conduit or tl	IN	01/90
2/28/2018	50050	0	Flow, in conduit or tl	IN	01/90
2/28/2018	50050	0	Flow, in conduit or tl	IN	01/90
2/28/2018	50050	0	Flow, in conduit or tl	IN	01/90
2/28/2018	50050	0	Flow, in conduit or tl	IN	01/90
2/28/2018	50050	0	Flow, in conduit or tl	IN	01/90
2/28/2018	50050	0	Flow, in conduit or tl	IN	01/90
2/28/2018	50050	0	Flow, in conduit or tl	IN	01/90
2/28/2018	50050	0	Flow, in conduit or tl	IN	01/90
2/28/2018	50050	0	Flow, in conduit or tl	IN	01/90
2/28/2018	50050	0	Flow, in conduit or tl	IN	01/90
2/28/2018	50050	0	Flow, in conduit or tl	IN	01/90
2/28/2018	50050	0	Flow, in conduit or tl	IN	01/90

2/28/2018	50050	0	Flow, in conduit or tl	IN	01/90
2/28/2018	50050	0	Flow, in conduit or tl	IN	01/90
2/28/2018	50050	0	Flow, in conduit or tl	IN	01/90
2/28/2018	50050	0	Flow, in conduit or tl	IN	01/90
2/28/2018	50050	0	Flow, in conduit or tl	IN	01/90
2/28/2018	50060	0	Chlorine, total residu	GR	01/90
2/28/2018	50060	0	Chlorine, total residu	GR	01/90
2/28/2018	50060	0	Chlorine, total residu	GR	01/90
2/28/2018	50060	0	Chlorine, total residu	GR	01/90
2/28/2018	50060	0	Chlorine, total residu	GR	01/90
2/28/2018	50060	0	Chlorine, total residu	GR	01/90
2/28/2018	50060	0	Chlorine, total residu	GR	01/90
2/28/2018	50060	0	Chlorine, total residu	GR	01/90
2/28/2018	50060	0	Chlorine, total residu	GR	01/90
2/28/2018	50060	0	Chlorine, total residu	GR	01/90
2/28/2018	50060	0	Chlorine, total residu	GR	01/90
2/28/2018	50060	0	Chlorine, total residu	GR	01/90
2/28/2018	50060	0	Chlorine, total residu	GR	01/90
2/28/2018	50060	0	Chlorine, total residu	GR	01/90
2/28/2018	50060	0	Chlorine, total residu	GR	01/90
2/28/2018	50060	0	Chlorine, total residu	GR	01/90
2/28/2018	50060	0	Chlorine, total residu	GR	01/90
2/28/2018	50060	0	Chlorine, total residu	GR	01/90
2/28/2018	50060	0	Chlorine, total residu	GR	01/90
2/28/2018	50060	0	Chlorine, total residu	GR	01/90
2/28/2018	50060	0	Chlorine, total residu	GR	01/90
2/28/2018	50060	0	Chlorine, total residu	GR	01/90
2/28/2018	50060	0	Chlorine, total residu	GR	01/90
2/28/2018	50060	0	Chlorine, total residu	GR	01/90
2/28/2018	51040	0	E. coli	GR	01/90
2/28/2018	51040	0	E. coli	GR	01/90
2/28/2018	51040	0	E. coli	GR	01/90
2/28/2018	51040	0	E. coli	GR	01/90
2/28/2018	51040	0	E. coli	GR	01/90
2/28/2018	51040	0	E. coli	GR	01/90
2/28/2018	51040	0	E. coli	GR	01/90
2/28/2018	51040	0	E. coli	GR	01/90
2/28/2018	51040	0	E. coli	GR	01/90
2/28/2018	51040	0	E. coli	GR	01/90
2/28/2018	51040	0	E. coli	GR	01/90
2/28/2018	51040	0	E. coli	GR	01/90
2/28/2018	51040	0	E. coli	GR	01/90
2/28/2018	51040	0	E. coli	GR	01/90

2/28/2018	51040	0	E. coli	GR	01/90
2/28/2018	51040	0	E. coli	GR	01/90
2/28/2018	51040	0	E. coli	GR	01/90
2/28/2018	51040	0	E. coli	GR	01/90
2/28/2018	51040	0	E. coli	GR	01/90
2/28/2018	51040	0	E. coli	GR	01/90
2/28/2018	51040	0	E. coli	GR	01/90
2/28/2018	51040	0	E. coli	GR	01/90

requency of Analys	Limit Unit Code	Limit Unit Desc	imit Unit Short Des	Limit Value	tatistical Base Cod
Quarterly	19	Milligrams per Liter	mg/L	2.	IB
Quarterly	19	Milligrams per Liter	mg/L	30.	MK
Quarterly	19	Milligrams per Liter	mg/L	45.	MS
Quarterly	12	Standard Units	SU	6.	ME
Quarterly	12	Standard Units	SU	9.	MB
Quarterly	19	Milligrams per Liter	mg/L	30.	MK
Quarterly	19	Milligrams per Liter	mg/L	45.	MS
Quarterly	19	Milligrams per Liter	mg/L		DD
Quarterly	19	Milligrams per Liter	mg/L		MK
Quarterly	19	Milligrams per Liter	mg/L	20.	MK
Quarterly	19	Milligrams per Liter	mg/L	30.	DD
Quarterly	19	Milligrams per Liter	mg/L		DD
Quarterly	19	Milligrams per Liter	mg/L		MK
Quarterly	03	Million Gallons per D	MGD		MK
Quarterly	03	Million Gallons per D	MGD		MS
Quarterly	19	Milligrams per Liter	mg/L	.011	MK
Quarterly	19	Milligrams per Liter	mg/L	.019	DD
Quarterly	13	Number per 100 Mil	#/100mL	130.	3D
Quarterly	13	Number per 100 Mil	#/100mL	240.	7B
Quarterly	19	Milligrams per Liter	mg/L	2.	IB
Quarterly	19	Milligrams per Liter	mg/L	2.	IB
Quarterly	19	Milligrams per Liter	mg/L	2.	IB
Quarterly	19	Milligrams per Liter	mg/L	2.	IB
Quarterly	19	Milligrams per Liter	mg/L	2.	IB
Quarterly	19	Milligrams per Liter	mg/L	2.	IB
Quarterly	19	Milligrams per Liter	mg/L	2.	IB
Quarterly	19	Milligrams per Liter	mg/L	2.	IB
Quarterly	19	Milligrams per Liter	mg/L	2.	IB
Quarterly	19	Milligrams per Liter	mg/L	2.	IB
Quarterly	19	Milligrams per Liter	mg/L	30.	3C
Quarterly	19	Milligrams per Liter	mg/L	30.	3C
Quarterly	19	Milligrams per Liter	mg/L	30.	3C
Quarterly	19	Milligrams per Liter	mg/L	30.	3C
Quarterly	19	Milligrams per Liter	mg/L	30.	3C
Quarterly	19	Milligrams per Liter	mg/L	30.	3C
Quarterly	19	Milligrams per Liter	mg/L	30.	3C
Quarterly	19	Milligrams per Liter	mg/L	30.	3C
Quarterly	19	Milligrams per Liter	mg/L	30.	3C

Quarterly	19	Milligrams per Liter	mg/L	30.	3C
Quarterly	19	Milligrams per Liter	mg/L	45.	WA
Quarterly	19	Milligrams per Liter	mg/L	45.	WA
Quarterly	19	Milligrams per Liter	mg/L	45.	WA
Quarterly	19	Milligrams per Liter	mg/L	45.	WA
Quarterly	19	Milligrams per Liter	mg/L	45.	WA
Quarterly	19	Milligrams per Liter	mg/L	45.	WA
Quarterly	19	Milligrams per Liter	mg/L	45.	WA
Quarterly	19	Milligrams per Liter	mg/L	45.	WA
Quarterly	19	Milligrams per Liter	mg/L	45.	WA
Quarterly	19	Milligrams per Liter	mg/L	45.	WA
Quarterly	19	Milligrams per Liter	mg/L	45.	WA
Quarterly	26	Pounds per Day	lb/d	2.45	3C
Quarterly	26	Pounds per Day	lb/d	2.45	3C
Quarterly	26	Pounds per Day	lb/d	2.45	3C
Quarterly	26	Pounds per Day	lb/d	2.45	3C
Quarterly	26	Pounds per Day	lb/d	2.45	3C
Quarterly	26	Pounds per Day	lb/d	2.45	3C
Quarterly	26	Pounds per Day	lb/d	2.45	3C
Quarterly	26	Pounds per Day	lb/d	2.45	3C
Quarterly	26	Pounds per Day	lb/d	2.45	3C
Quarterly	26	Pounds per Day	lb/d	2.45	3C
Quarterly	26	Pounds per Day	lb/d	3.68	WA
Quarterly	26	Pounds per Day	lb/d	3.68	WA
Quarterly	26	Pounds per Day	lb/d	3.68	WA
Quarterly	26	Pounds per Day	lb/d	3.68	WA
Quarterly	26	Pounds per Day	lb/d	3.68	WA
Quarterly	26	Pounds per Day	lb/d	3.68	WA
Quarterly	26	Pounds per Day	lb/d	3.68	WA
Quarterly	26	Pounds per Day	lb/d	3.68	WA
Quarterly	26	Pounds per Day	lb/d	3.68	WA
Quarterly	26	Pounds per Day	lb/d	3.68	WA
Quarterly	12	Standard Units	SU	6.	ME
Quarterly	12	Standard Units	SU	6.	ME
Quarterly	12	Standard Units	SU	6.	ME
Quarterly	12	Standard Units	SU	6.	ME
Quarterly	12	Standard Units	SU	6.	ME
Quarterly	12	Standard Units	SU	6.	ME
Quarterly	12	Standard Units	SU	6.	ME

Quarterly	12	Standard Units	SU	6.	ME
Quarterly	12	Standard Units	SU	6.	ME
Quarterly	12	Standard Units	SU	6.	ME
Quarterly	12	Standard Units	SU	6.	ME
Quarterly	12	Standard Units	SU	9.	MB
Quarterly	12	Standard Units	SU	9.	MB
Quarterly	12	Standard Units	SU	9.	MB
Quarterly	12	Standard Units	SU	9.	MB
Quarterly	12	Standard Units	SU	9.	MB
Quarterly	12	Standard Units	SU	9.	MB
Quarterly	12	Standard Units	SU	9.	MB
Quarterly	12	Standard Units	SU	9.	MB
Quarterly	12	Standard Units	SU	9.	MB
Quarterly	12	Standard Units	SU	9.	MB
Quarterly	19	Milligrams per Liter	mg/L	30.	3C
Quarterly	19	Milligrams per Liter	mg/L	30.	3C
Quarterly	19	Milligrams per Liter	mg/L	30.	3C
Quarterly	19	Milligrams per Liter	mg/L	30.	3C
Quarterly	19	Milligrams per Liter	mg/L	30.	3C
Quarterly	19	Milligrams per Liter	mg/L	30.	3C
Quarterly	19	Milligrams per Liter	mg/L	30.	3C
Quarterly	19	Milligrams per Liter	mg/L	30.	3C
Quarterly	19	Milligrams per Liter	mg/L	30.	3C
Quarterly	19	Milligrams per Liter	mg/L	30.	3C
Quarterly	19	Milligrams per Liter	mg/L	45.	WA
Quarterly	19	Milligrams per Liter	mg/L	45.	WA
Quarterly	19	Milligrams per Liter	mg/L	45.	WA
Quarterly	19	Milligrams per Liter	mg/L	45.	WA
Quarterly	19	Milligrams per Liter	mg/L	45.	WA
Quarterly	19	Milligrams per Liter	mg/L	45.	WA
Quarterly	19	Milligrams per Liter	mg/L	45.	WA
Quarterly	19	Milligrams per Liter	mg/L	45.	WA
Quarterly	19	Milligrams per Liter	mg/L	45.	WA
Quarterly	19	Milligrams per Liter	mg/L	45.	WA
Quarterly	26	Pounds per Day	lb/d	2.45	3C
Quarterly	26	Pounds per Day	lb/d	2.45	3C
Quarterly	26	Pounds per Day	lb/d	2.45	3C
Quarterly	26	Pounds per Day	lb/d	2.45	3C

Quarterly	26	Pounds per Day	lb/d	2.45	3C
Quarterly	26	Pounds per Day	lb/d	2.45	3C
Quarterly	26	Pounds per Day	lb/d	2.45	3C
Quarterly	26	Pounds per Day	lb/d	2.45	3C
Quarterly	26	Pounds per Day	lb/d	2.45	3C
Quarterly	26	Pounds per Day	lb/d	2.45	3C
Quarterly	26	Pounds per Day	lb/d	2.45	3C
Quarterly	26	Pounds per Day	lb/d	3.68	WA
Quarterly	26	Pounds per Day	lb/d	3.68	WA
Quarterly	26	Pounds per Day	lb/d	3.68	WA
Quarterly	26	Pounds per Day	lb/d	3.68	WA
Quarterly	26	Pounds per Day	lb/d	3.68	WA
Quarterly	26	Pounds per Day	lb/d	3.68	WA
Quarterly	26	Pounds per Day	lb/d	3.68	WA
Quarterly	26	Pounds per Day	lb/d	3.68	WA
Quarterly	26	Pounds per Day	lb/d	3.68	WA
Quarterly	26	Pounds per Day	lb/d	3.68	WA
Quarterly	19	Milligrams per Liter	mg/L		3C
Quarterly	19	Milligrams per Liter	mg/L		3C
Quarterly	19	Milligrams per Liter	mg/L		3C
Quarterly	19	Milligrams per Liter	mg/L		3C
Quarterly	19	Milligrams per Liter	mg/L		3C
Quarterly	19	Milligrams per Liter	mg/L		3C
Quarterly	19	Milligrams per Liter	mg/L		3C
Quarterly	19	Milligrams per Liter	mg/L		3C
Quarterly	19	Milligrams per Liter	mg/L		3C
Quarterly	19	Milligrams per Liter	mg/L		3C
Quarterly	19	Milligrams per Liter	mg/L		3C
Quarterly	19	Milligrams per Liter	mg/L		WA
Quarterly	19	Milligrams per Liter	mg/L		WA
Quarterly	19	Milligrams per Liter	mg/L		WA
Quarterly	19	Milligrams per Liter	mg/L		WA
Quarterly	19	Milligrams per Liter	mg/L		WA
Quarterly	19	Milligrams per Liter	mg/L		WA
Quarterly	19	Milligrams per Liter	mg/L		WA
Quarterly	19	Milligrams per Liter	mg/L		WA
Quarterly	19	Milligrams per Liter	mg/L		WA
Quarterly	19	Milligrams per Liter	mg/L		WA
Quarterly	19	Milligrams per Liter	mg/L	20.	3C

Quarterly	19	Milligrams per Liter	mg/L	20.	3C
Quarterly	19	Milligrams per Liter	mg/L	20.	3C
Quarterly	19	Milligrams per Liter	mg/L	20.	3C
Quarterly	19	Milligrams per Liter	mg/L	20.	3C
Quarterly	19	Milligrams per Liter	mg/L	20.	3C
Quarterly	19	Milligrams per Liter	mg/L	20.	3C
Quarterly	19	Milligrams per Liter	mg/L	20.	3C
Quarterly	19	Milligrams per Liter	mg/L	20.	3C
Quarterly	19	Milligrams per Liter	mg/L	20.	3C
Quarterly	19	Milligrams per Liter	mg/L	20.	3C
Quarterly	19	Milligrams per Liter	mg/L	30.	WA
Quarterly	19	Milligrams per Liter	mg/L	30.	WA
Quarterly	19	Milligrams per Liter	mg/L	30.	WA
Quarterly	19	Milligrams per Liter	mg/L	30.	WA
Quarterly	19	Milligrams per Liter	mg/L	30.	WA
Quarterly	19	Milligrams per Liter	mg/L	30.	WA
Quarterly	19	Milligrams per Liter	mg/L	30.	WA
Quarterly	19	Milligrams per Liter	mg/L	30.	WA
Quarterly	19	Milligrams per Liter	mg/L	30.	WA
Quarterly	19	Milligrams per Liter	mg/L	30.	WA
Quarterly	26	Pounds per Day	lb/d	1.63	3C
Quarterly	26	Pounds per Day	lb/d	1.63	3C
Quarterly	26	Pounds per Day	lb/d	1.63	3C
Quarterly	26	Pounds per Day	lb/d	1.63	3C
Quarterly	26	Pounds per Day	lb/d	1.63	3C
Quarterly	26	Pounds per Day	lb/d	1.63	3C
Quarterly	26	Pounds per Day	lb/d	1.63	3C
Quarterly	26	Pounds per Day	lb/d	1.63	3C
Quarterly	26	Pounds per Day	lb/d	1.63	3C
Quarterly	26	Pounds per Day	lb/d	1.63	3C
Quarterly	26	Pounds per Day	lb/d	2.45	WA
Quarterly	26	Pounds per Day	lb/d	2.45	WA
Quarterly	26	Pounds per Day	lb/d	2.45	WA
Quarterly	26	Pounds per Day	lb/d	2.45	WA
Quarterly	26	Pounds per Day	lb/d	2.45	WA
Quarterly	26	Pounds per Day	lb/d	2.45	WA
Quarterly	26	Pounds per Day	lb/d	2.45	WA
Quarterly	26	Pounds per Day	lb/d	2.45	WA

Quarterly	26	Pounds per Day	lb/d	2.45	WA
Quarterly	26	Pounds per Day	lb/d	2.45	WA
Quarterly	19	Milligrams per Liter	mg/L	1.	3C
Quarterly	19	Milligrams per Liter	mg/L	1.	3C
Quarterly	19	Milligrams per Liter	mg/L	1.	3C
Quarterly	19	Milligrams per Liter	mg/L	1.	3C
Quarterly	19	Milligrams per Liter	mg/L	1.	3C
Quarterly	19	Milligrams per Liter	mg/L	1.	3C
Quarterly	19	Milligrams per Liter	mg/L	1.	3C
Quarterly	19	Milligrams per Liter	mg/L	1.	3C
Quarterly	19	Milligrams per Liter	mg/L	1.	3C
Quarterly	19	Milligrams per Liter	mg/L	1.	3C
Quarterly	19	Milligrams per Liter	mg/L	1.	3C
Quarterly	19	Milligrams per Liter	mg/L		WA
Quarterly	19	Milligrams per Liter	mg/L		WA
Quarterly	19	Milligrams per Liter	mg/L		WA
Quarterly	19	Milligrams per Liter	mg/L		WA
Quarterly	19	Milligrams per Liter	mg/L		WA
Quarterly	19	Milligrams per Liter	mg/L		WA
Quarterly	19	Milligrams per Liter	mg/L		WA
Quarterly	19	Milligrams per Liter	mg/L		WA
Quarterly	19	Milligrams per Liter	mg/L		WA
Quarterly	19	Milligrams per Liter	mg/L		WA
Quarterly	03	Million Gallons per D	MGD		3C
Quarterly	03	Million Gallons per D	MGD		3C
Quarterly	03	Million Gallons per D	MGD		3C
Quarterly	03	Million Gallons per D	MGD		3C
Quarterly	03	Million Gallons per D	MGD		3C
Quarterly	03	Million Gallons per D	MGD		3C
Quarterly	03	Million Gallons per D	MGD		3C
Quarterly	03	Million Gallons per D	MGD		3C
Quarterly	03	Million Gallons per D	MGD		3C
Quarterly	03	Million Gallons per D	MGD		3C
Quarterly	03	Million Gallons per D	MGD		3C
Quarterly	03	Million Gallons per D	MGD		WA
Quarterly	03	Million Gallons per D	MGD		WA
Quarterly	03	Million Gallons per D	MGD		WA
Quarterly	03	Million Gallons per D	MGD		WA
Quarterly	03	Million Gallons per D	MGD		WA
Quarterly	03	Million Gallons per D	MGD		WA

Quarterly	03	Million Gallons per D	MGD		WA
Quarterly	03	Million Gallons per D	MGD		WA
Quarterly	03	Million Gallons per D	MGD		WA
Quarterly	03	Million Gallons per D	MGD		WA
Quarterly	03	Million Gallons per D	MGD		WA
Quarterly	19	Milligrams per Liter	mg/L	.011	3C
Quarterly	19	Milligrams per Liter	mg/L	.011	3C
Quarterly	19	Milligrams per Liter	mg/L	.011	3C
Quarterly	19	Milligrams per Liter	mg/L	.011	3C
Quarterly	19	Milligrams per Liter	mg/L	.011	3C
Quarterly	19	Milligrams per Liter	mg/L	.011	3C
Quarterly	19	Milligrams per Liter	mg/L	.011	3C
Quarterly	19	Milligrams per Liter	mg/L	.011	3C
Quarterly	19	Milligrams per Liter	mg/L	.011	3C
Quarterly	19	Milligrams per Liter	mg/L	.011	3C
Quarterly	19	Milligrams per Liter	mg/L	.011	3C
Quarterly	19	Milligrams per Liter	mg/L	.019	WA
Quarterly	19	Milligrams per Liter	mg/L	.019	WA
Quarterly	19	Milligrams per Liter	mg/L	.019	WA
Quarterly	19	Milligrams per Liter	mg/L	.019	WA
Quarterly	19	Milligrams per Liter	mg/L	.019	WA
Quarterly	19	Milligrams per Liter	mg/L	.019	WA
Quarterly	19	Milligrams per Liter	mg/L	.019	WA
Quarterly	19	Milligrams per Liter	mg/L	.019	WA
Quarterly	19	Milligrams per Liter	mg/L	.019	WA
Quarterly	19	Milligrams per Liter	mg/L	.019	WA
Quarterly	13	Number per 100 Mil	#/100mL	130.	3D
Quarterly	13	Number per 100 Mil	#/100mL	130.	3D
Quarterly	13	Number per 100 Mil	#/100mL	130.	3D
Quarterly	13	Number per 100 Mil	#/100mL	130.	3D
Quarterly	13	Number per 100 Mil	#/100mL	130.	3D
Quarterly	13	Number per 100 Mil	#/100mL	130.	3D
Quarterly	13	Number per 100 Mil	#/100mL	130.	3D
Quarterly	13	Number per 100 Mil	#/100mL	130.	3D
Quarterly	13	Number per 100 Mil	#/100mL	130.	3D
Quarterly	13	Number per 100 Mil	#/100mL	130.	3D
Quarterly	13	Number per 100 Mil	#/100mL	130.	3D
Quarterly	13	Number per 100 Mil	#/100mL	240.	7B
Quarterly	13	Number per 100 Mil	#/100mL	240.	7B
Quarterly	13	Number per 100 Mil	#/100mL	240.	7B

Quarterly	13	Number per 100 Mil	#/100mL	240.	7B
Quarterly	13	Number per 100 Mil	#/100mL	240.	7B
Quarterly	13	Number per 100 Mil	#/100mL	240.	7B
Quarterly	13	Number per 100 Mil	#/100mL	240.	7B
Quarterly	13	Number per 100 Mil	#/100mL	240.	7B
Quarterly	13	Number per 100 Mil	#/100mL	240.	7B
Quarterly	13	Number per 100 Mil	#/100mL	240.	7B
Quarterly	13	Number per 100 Mil	#/100mL	240.	7B

istical Base Short D	istical Base Long D	istical Base Type C	DMR Comment	Modification Effect	Modification Type
INST MIN	Instantaneous Minin	MIN			
MO AVG	Monthly Average	AVG			
MX WK AV	Maximum Weekly A	MAX			
MINIMUM	Minimum	MIN			
MAXIMUM	Maximum	MAX			
MO AVG	Monthly Average	AVG			
MX WK AV	Maximum Weekly A	MAX			
DAILY MX	Daily Maximum	MAX			
MO AVG	Monthly Average	AVG			
MO AVG	Monthly Average	AVG			
DAILY MX	Daily Maximum	MAX			
DAILY MX	Daily Maximum	MAX			
MO AVG	Monthly Average	AVG			
MO AVG	Monthly Average	AVG			
MX WK AV	Maximum Weekly A	MAX			
MO AVG	Monthly Average	AVG			
DAILY MX	Daily Maximum	MAX			
30DA GEO	30 Day Geometric	AVG			
7 DA GEO	7 Day Geometric	AVG			
INST MIN	Instantaneous Minin	MIN	FEEDING ALUMINUM SULFATE FOR PHOSPHORUS		
INST MIN	Instantaneous Minin	MIN	HIGH WATER ON HERRINGTON LAKE EFFLUENT UNDEF		
INST MIN	Instantaneous Minin	MIN	HIGH WATER ON HERRINGTON LAKE EIGHT DAYS PRIC		
INST MIN	Instantaneous Minin	MIN	Lab pulled sample after flood water was below Chlorine Conta		
INST MIN	Instantaneous Minin	MIN	Loss of process control second week of December 2020, Plar		
INST MIN	Instantaneous Minin	MIN	March 14th High Water pushed Sludge out of Plant. Frankfort		
INST MIN	Instantaneous Minin	MIN	PACKAGE PLANT, FEEDING ALUMINUM SULFATE FOR P		
INST MIN	Instantaneous Minin	MIN	Phosphorus level has been lowered however above limit. Fee		
INST MIN	Instantaneous Minin	MIN	Plant Flooded. High Water on Herrington Lake due to heavy		
INST MIN	Instantaneous Minin	MIN	UNABLE TO PULL SAMPLE DUE TO FLOOD. HIGH WATEI		
INST MIN	Instantaneous Minin	MIN			
30DA AVG	30 Day Average	AVG	FEEDING ALUMINUM SULFATE FOR PHOSPHORUS		
30DA AVG	30 Day Average	AVG	HIGH WATER ON HERRINGTON LAKE EFFLUENT UNDEF		
30DA AVG	30 Day Average	AVG	HIGH WATER ON HERRINGTON LAKE EIGHT DAYS PRIC		
30DA AVG	30 Day Average	AVG	Lab pulled sample after flood water was below Chlorine Conta		
30DA AVG	30 Day Average	AVG	Loss of process control second week of December 2020, Plar		
30DA AVG	30 Day Average	AVG	March 14th High Water pushed Sludge out of Plant. Frankfort		
30DA AVG	30 Day Average	AVG	PACKAGE PLANT, FEEDING ALUMINUM SULFATE FOR P		
30DA AVG	30 Day Average	AVG	Phosphorus level has been lowered however above limit. Fee		
30DA AVG	30 Day Average	AVG	Plant Flooded. High Water on Herrington Lake due to heavy		
30DA AVG	30 Day Average	AVG	UNABLE TO PULL SAMPLE DUE TO FLOOD. HIGH WATEI		

30DA AVG	30 Day Average	AVG			
WKLY AVG	Weekly Average	AVG	FEEDING ALUMINUM SULFATE FOR PHOSPHORUS		
WKLY AVG	Weekly Average	AVG	HIGH WATER ON HERRINGTON LAKE EFFLUENT UNDER		
WKLY AVG	Weekly Average	AVG	HIGH WATER ON HERRINGTON LAKE EIGHT DAYS PRIC		
WKLY AVG	Weekly Average	AVG	Lab pulled sample after flood water was below Chlorine Conta		
WKLY AVG	Weekly Average	AVG	Loss of process control second week of December 2020, Plan		
WKLY AVG	Weekly Average	AVG	March 14th High Water pushed Sludge out of Plant. Frankfort		
WKLY AVG	Weekly Average	AVG	PACKAGE PLANT, FEEDING ALUMINUM SULFATE FOR P		
WKLY AVG	Weekly Average	AVG	Phosphorus level has been lowered however above limit. Fee		
WKLY AVG	Weekly Average	AVG	Plant Flooded. High Water on Herrington Lake due to heavy		
WKLY AVG	Weekly Average	AVG	UNABLE TO PULL SAMPLE DUE TO FLOOD. HIGH WATEI		
WKLY AVG	Weekly Average	AVG			
30DA AVG	30 Day Average	AVG	FEEDING ALUMINUM SULFATE FOR PHOSPHORUS		
30DA AVG	30 Day Average	AVG	HIGH WATER ON HERRINGTON LAKE EFFLUENT UNDER		
30DA AVG	30 Day Average	AVG	HIGH WATER ON HERRINGTON LAKE EIGHT DAYS PRIC		
30DA AVG	30 Day Average	AVG	Lab pulled sample after flood water was below Chlorine Conta		
30DA AVG	30 Day Average	AVG	Loss of process control second week of December 2020, Plan		
30DA AVG	30 Day Average	AVG	March 14th High Water pushed Sludge out of Plant. Frankfort		
30DA AVG	30 Day Average	AVG	PACKAGE PLANT, FEEDING ALUMINUM SULFATE FOR P		
30DA AVG	30 Day Average	AVG	Phosphorus level has been lowered however above limit. Fee		
30DA AVG	30 Day Average	AVG	Plant Flooded. High Water on Herrington Lake due to heavy		
30DA AVG	30 Day Average	AVG	UNABLE TO PULL SAMPLE DUE TO FLOOD. HIGH WATEI		
30DA AVG	30 Day Average	AVG			
WKLY AVG	Weekly Average	AVG	FEEDING ALUMINUM SULFATE FOR PHOSPHORUS		
WKLY AVG	Weekly Average	AVG	HIGH WATER ON HERRINGTON LAKE EFFLUENT UNDER		
WKLY AVG	Weekly Average	AVG	HIGH WATER ON HERRINGTON LAKE EIGHT DAYS PRIC		
WKLY AVG	Weekly Average	AVG	Lab pulled sample after flood water was below Chlorine Conta		
WKLY AVG	Weekly Average	AVG	Loss of process control second week of December 2020, Plan		
WKLY AVG	Weekly Average	AVG	March 14th High Water pushed Sludge out of Plant. Frankfort		
WKLY AVG	Weekly Average	AVG	PACKAGE PLANT, FEEDING ALUMINUM SULFATE FOR P		
WKLY AVG	Weekly Average	AVG	Phosphorus level has been lowered however above limit. Fee		
WKLY AVG	Weekly Average	AVG	Plant Flooded. High Water on Herrington Lake due to heavy		
WKLY AVG	Weekly Average	AVG	UNABLE TO PULL SAMPLE DUE TO FLOOD. HIGH WATEI		
WKLY AVG	Weekly Average	AVG			
MINIMUM	Minimum	MIN	FEEDING ALUMINUM SULFATE FOR PHOSPHORUS		
MINIMUM	Minimum	MIN	HIGH WATER ON HERRINGTON LAKE EFFLUENT UNDER		
MINIMUM	Minimum	MIN	HIGH WATER ON HERRINGTON LAKE EIGHT DAYS PRIC		
MINIMUM	Minimum	MIN	Lab pulled sample after flood water was below Chlorine Conta		
MINIMUM	Minimum	MIN	Loss of process control second week of December 2020, Plan		
MINIMUM	Minimum	MIN	March 14th High Water pushed Sludge out of Plant. Frankfort		
MINIMUM	Minimum	MIN	PACKAGE PLANT, FEEDING ALUMINUM SULFATE FOR P		

MINIMUM	Minimum	MIN	Phosphorus level has been lowered however above limit. Fee
MINIMUM	Minimum	MIN	Plant Flooded. High Water on Herrington Lake due to heavy
MINIMUM	Minimum	MIN	UNABLE TO PULL SAMPLE DUE TO FLOOD. HIGH WATE
MINIMUM	Minimum	MIN	
MAXIMUM	Maximum	MAX	FEEDING ALUMINUM SULFATE FOR PHOSPHORUS
MAXIMUM	Maximum	MAX	HIGH WATER ON HERRINGTON LAKE EFFLUENT UNDER
MAXIMUM	Maximum	MAX	HIGH WATER ON HERRINGTON LAKE EIGHT DAYS PRIO
MAXIMUM	Maximum	MAX	Lab pulled sample after flood water was below Chlorine Conta
MAXIMUM	Maximum	MAX	Loss of process control second week of December 2020, Plan
MAXIMUM	Maximum	MAX	March 14th High Water pushed Sludge out of Plant. Frankfort
MAXIMUM	Maximum	MAX	PACKAGE PLANT, FEEDING ALUMINUM SULFATE FOR P
MAXIMUM	Maximum	MAX	Phosphorus level has been lowered however above limit. Fee
MAXIMUM	Maximum	MAX	Plant Flooded. High Water on Herrington Lake due to heavy
MAXIMUM	Maximum	MAX	UNABLE TO PULL SAMPLE DUE TO FLOOD. HIGH WATE
MAXIMUM	Maximum	MAX	
30DA AVG	30 Day Average	AVG	FEEDING ALUMINUM SULFATE FOR PHOSPHORUS
30DA AVG	30 Day Average	AVG	HIGH WATER ON HERRINGTON LAKE EFFLUENT UNDER
30DA AVG	30 Day Average	AVG	HIGH WATER ON HERRINGTON LAKE EIGHT DAYS PRIO
30DA AVG	30 Day Average	AVG	Lab pulled sample after flood water was below Chlorine Conta
30DA AVG	30 Day Average	AVG	Loss of process control second week of December 2020, Plan
30DA AVG	30 Day Average	AVG	March 14th High Water pushed Sludge out of Plant. Frankfort
30DA AVG	30 Day Average	AVG	PACKAGE PLANT, FEEDING ALUMINUM SULFATE FOR P
30DA AVG	30 Day Average	AVG	Phosphorus level has been lowered however above limit. Fee
30DA AVG	30 Day Average	AVG	Plant Flooded. High Water on Herrington Lake due to heavy
30DA AVG	30 Day Average	AVG	UNABLE TO PULL SAMPLE DUE TO FLOOD. HIGH WATE
30DA AVG	30 Day Average	AVG	
WKLY AVG	Weekly Average	AVG	FEEDING ALUMINUM SULFATE FOR PHOSPHORUS
WKLY AVG	Weekly Average	AVG	HIGH WATER ON HERRINGTON LAKE EFFLUENT UNDER
WKLY AVG	Weekly Average	AVG	HIGH WATER ON HERRINGTON LAKE EIGHT DAYS PRIO
WKLY AVG	Weekly Average	AVG	Lab pulled sample after flood water was below Chlorine Conta
WKLY AVG	Weekly Average	AVG	Loss of process control second week of December 2020, Plan
WKLY AVG	Weekly Average	AVG	March 14th High Water pushed Sludge out of Plant. Frankfort
WKLY AVG	Weekly Average	AVG	PACKAGE PLANT, FEEDING ALUMINUM SULFATE FOR P
WKLY AVG	Weekly Average	AVG	Phosphorus level has been lowered however above limit. Fee
WKLY AVG	Weekly Average	AVG	Plant Flooded. High Water on Herrington Lake due to heavy
WKLY AVG	Weekly Average	AVG	UNABLE TO PULL SAMPLE DUE TO FLOOD. HIGH WATE
WKLY AVG	Weekly Average	AVG	
30DA AVG	30 Day Average	AVG	FEEDING ALUMINUM SULFATE FOR PHOSPHORUS
30DA AVG	30 Day Average	AVG	HIGH WATER ON HERRINGTON LAKE EFFLUENT UNDER
30DA AVG	30 Day Average	AVG	HIGH WATER ON HERRINGTON LAKE EIGHT DAYS PRIO
30DA AVG	30 Day Average	AVG	Lab pulled sample after flood water was below Chlorine Conta

30DA AVG	30 Day Average	AVG	Loss of process control second week of December 2020, Pla
30DA AVG	30 Day Average	AVG	March 14th High Water pushed Sludge out of Plant. Frankfort
30DA AVG	30 Day Average	AVG	PACKAGE PLANT, FEEDING ALUMINUM SULFATE FOR P
30DA AVG	30 Day Average	AVG	Phosphorus level has been lowered however above limit. Fee
30DA AVG	30 Day Average	AVG	Plant Flooded. High Water on Herrington Lake due to heavy
30DA AVG	30 Day Average	AVG	UNABLE TO PULL SAMPLE DUE TO FLOOD. HIGH WATE
30DA AVG	30 Day Average	AVG	
WKLY AVG	Weekly Average	AVG	FEEDING ALUMINUM SULFATE FOR PHOSPHORUS
WKLY AVG	Weekly Average	AVG	HIGH WATER ON HERRINGTON LAKE EFFLUENT UNDER
WKLY AVG	Weekly Average	AVG	HIGH WATER ON HERRINGTON LAKE EIGHT DAYS PRIC
WKLY AVG	Weekly Average	AVG	Lab pulled sample after flood water was below Chlorine Conta
WKLY AVG	Weekly Average	AVG	Loss of process control second week of December 2020, Pla
WKLY AVG	Weekly Average	AVG	March 14th High Water pushed Sludge out of Plant. Frankfort
WKLY AVG	Weekly Average	AVG	PACKAGE PLANT, FEEDING ALUMINUM SULFATE FOR P
WKLY AVG	Weekly Average	AVG	Phosphorus level has been lowered however above limit. Fee
WKLY AVG	Weekly Average	AVG	Plant Flooded. High Water on Herrington Lake due to heavy
WKLY AVG	Weekly Average	AVG	UNABLE TO PULL SAMPLE DUE TO FLOOD. HIGH WATE
WKLY AVG	Weekly Average	AVG	
30DA AVG	30 Day Average	AVG	FEEDING ALUMINUM SULFATE FOR PHOSPHORUS
30DA AVG	30 Day Average	AVG	HIGH WATER ON HERRINGTON LAKE EFFLUENT UNDER
30DA AVG	30 Day Average	AVG	HIGH WATER ON HERRINGTON LAKE EIGHT DAYS PRIC
30DA AVG	30 Day Average	AVG	Lab pulled sample after flood water was below Chlorine Conta
30DA AVG	30 Day Average	AVG	Loss of process control second week of December 2020, Pla
30DA AVG	30 Day Average	AVG	March 14th High Water pushed Sludge out of Plant. Frankfort
30DA AVG	30 Day Average	AVG	PACKAGE PLANT, FEEDING ALUMINUM SULFATE FOR P
30DA AVG	30 Day Average	AVG	Phosphorus level has been lowered however above limit. Fee
30DA AVG	30 Day Average	AVG	Plant Flooded. High Water on Herrington Lake due to heavy
30DA AVG	30 Day Average	AVG	UNABLE TO PULL SAMPLE DUE TO FLOOD. HIGH WATE
30DA AVG	30 Day Average	AVG	
WKLY AVG	Weekly Average	AVG	FEEDING ALUMINUM SULFATE FOR PHOSPHORUS
WKLY AVG	Weekly Average	AVG	HIGH WATER ON HERRINGTON LAKE EFFLUENT UNDER
WKLY AVG	Weekly Average	AVG	HIGH WATER ON HERRINGTON LAKE EIGHT DAYS PRIC
WKLY AVG	Weekly Average	AVG	Lab pulled sample after flood water was below Chlorine Conta
WKLY AVG	Weekly Average	AVG	Loss of process control second week of December 2020, Pla
WKLY AVG	Weekly Average	AVG	March 14th High Water pushed Sludge out of Plant. Frankfort
WKLY AVG	Weekly Average	AVG	PACKAGE PLANT, FEEDING ALUMINUM SULFATE FOR P
WKLY AVG	Weekly Average	AVG	Phosphorus level has been lowered however above limit. Fee
WKLY AVG	Weekly Average	AVG	Plant Flooded. High Water on Herrington Lake due to heavy
WKLY AVG	Weekly Average	AVG	UNABLE TO PULL SAMPLE DUE TO FLOOD. HIGH WATE
WKLY AVG	Weekly Average	AVG	
30DA AVG	30 Day Average	AVG	FEEDING ALUMINUM SULFATE FOR PHOSPHORUS

30DA AVG	30 Day Average	AVG	HIGH WATER ON HERRINGTON LAKE EFFLUENT UNDER
30DA AVG	30 Day Average	AVG	HIGH WATER ON HERRINGTON LAKE EIGHT DAYS PRIO
30DA AVG	30 Day Average	AVG	Lab pulled sample after flood water was below Chlorine Conta
30DA AVG	30 Day Average	AVG	Loss of process control second week of December 2020, Plan
30DA AVG	30 Day Average	AVG	March 14th High Water pushed Sludge out of Plant. Frankfort
30DA AVG	30 Day Average	AVG	PACKAGE PLANT, FEEDING ALUMINUM SULFATE FOR P
30DA AVG	30 Day Average	AVG	Phosphorus level has been lowered however above limit. Fee
30DA AVG	30 Day Average	AVG	Plant Flooded. High Water on Herrington Lake due to heavy
30DA AVG	30 Day Average	AVG	UNABLE TO PULL SAMPLE DUE TO FLOOD. HIGH WATEI
30DA AVG	30 Day Average	AVG			
WKLY AVG	Weekly Average	AVG	FEEDING ALUMINUM SULFATE FOR PHOSPHORUS
WKLY AVG	Weekly Average	AVG	HIGH WATER ON HERRINGTON LAKE EFFLUENT UNDER
WKLY AVG	Weekly Average	AVG	HIGH WATER ON HERRINGTON LAKE EIGHT DAYS PRIO
WKLY AVG	Weekly Average	AVG	Lab pulled sample after flood water was below Chlorine Conta
WKLY AVG	Weekly Average	AVG	Loss of process control second week of December 2020, Plan
WKLY AVG	Weekly Average	AVG	March 14th High Water pushed Sludge out of Plant. Frankfort
WKLY AVG	Weekly Average	AVG	PACKAGE PLANT, FEEDING ALUMINUM SULFATE FOR P
WKLY AVG	Weekly Average	AVG	Phosphorus level has been lowered however above limit. Fee
WKLY AVG	Weekly Average	AVG	Plant Flooded. High Water on Herrington Lake due to heavy
WKLY AVG	Weekly Average	AVG	UNABLE TO PULL SAMPLE DUE TO FLOOD. HIGH WATEI
WKLY AVG	Weekly Average	AVG			
30DA AVG	30 Day Average	AVG	FEEDING ALUMINUM SULFATE FOR PHOSPHORUS
30DA AVG	30 Day Average	AVG	HIGH WATER ON HERRINGTON LAKE EFFLUENT UNDER
30DA AVG	30 Day Average	AVG	HIGH WATER ON HERRINGTON LAKE EIGHT DAYS PRIO
30DA AVG	30 Day Average	AVG	Lab pulled sample after flood water was below Chlorine Conta
30DA AVG	30 Day Average	AVG	Loss of process control second week of December 2020, Plan
30DA AVG	30 Day Average	AVG	March 14th High Water pushed Sludge out of Plant. Frankfort
30DA AVG	30 Day Average	AVG	PACKAGE PLANT, FEEDING ALUMINUM SULFATE FOR P
30DA AVG	30 Day Average	AVG	Phosphorus level has been lowered however above limit. Fee
30DA AVG	30 Day Average	AVG	Plant Flooded. High Water on Herrington Lake due to heavy
30DA AVG	30 Day Average	AVG	UNABLE TO PULL SAMPLE DUE TO FLOOD. HIGH WATEI
30DA AVG	30 Day Average	AVG			
WKLY AVG	Weekly Average	AVG	FEEDING ALUMINUM SULFATE FOR PHOSPHORUS
WKLY AVG	Weekly Average	AVG	HIGH WATER ON HERRINGTON LAKE EFFLUENT UNDER
WKLY AVG	Weekly Average	AVG	HIGH WATER ON HERRINGTON LAKE EIGHT DAYS PRIO
WKLY AVG	Weekly Average	AVG	Lab pulled sample after flood water was below Chlorine Conta
WKLY AVG	Weekly Average	AVG	Loss of process control second week of December 2020, Plan
WKLY AVG	Weekly Average	AVG	March 14th High Water pushed Sludge out of Plant. Frankfort
WKLY AVG	Weekly Average	AVG	PACKAGE PLANT, FEEDING ALUMINUM SULFATE FOR P
WKLY AVG	Weekly Average	AVG	Phosphorus level has been lowered however above limit. Fee
WKLY AVG	Weekly Average	AVG	Plant Flooded. High Water on Herrington Lake due to heavy

WKLY AVG	Weekly Average	AVG	UNABLE TO PULL SAMPLE DUE TO FLOOD. HIGH WATE
WKLY AVG	Weekly Average	AVG	
30DA AVG	30 Day Average	AVG	FEEDING ALUMINUM SULFATE FOR PHOSPHORUS
30DA AVG	30 Day Average	AVG	HIGH WATER ON HERRINGTON LAKE EFFLUENT UNDEF
30DA AVG	30 Day Average	AVG	HIGH WATER ON HERRINGTON LAKE EIGHT DAYS PRIC
30DA AVG	30 Day Average	AVG	Lab pulled sample after flood water was below Chlorine Conta
30DA AVG	30 Day Average	AVG	Loss of process control second week of December 2020, Plar
30DA AVG	30 Day Average	AVG	March 14th High Water pushed Sludge out of Plant. Frankfort
30DA AVG	30 Day Average	AVG	PACKAGE PLANT, FEEDING ALUMINUM SULFATE FOR P
30DA AVG	30 Day Average	AVG	Phosphorus level has been lowered however above limit. Fee
30DA AVG	30 Day Average	AVG	Plant Flooded. High Water on Herrington Lake due to heavy
30DA AVG	30 Day Average	AVG	UNABLE TO PULL SAMPLE DUE TO FLOOD. HIGH WATE
30DA AVG	30 Day Average	AVG	
WKLY AVG	Weekly Average	AVG	FEEDING ALUMINUM SULFATE FOR PHOSPHORUS
WKLY AVG	Weekly Average	AVG	HIGH WATER ON HERRINGTON LAKE EFFLUENT UNDEF
WKLY AVG	Weekly Average	AVG	HIGH WATER ON HERRINGTON LAKE EIGHT DAYS PRIC
WKLY AVG	Weekly Average	AVG	Lab pulled sample after flood water was below Chlorine Conta
WKLY AVG	Weekly Average	AVG	Loss of process control second week of December 2020, Plar
WKLY AVG	Weekly Average	AVG	March 14th High Water pushed Sludge out of Plant. Frankfort
WKLY AVG	Weekly Average	AVG	PACKAGE PLANT, FEEDING ALUMINUM SULFATE FOR P
WKLY AVG	Weekly Average	AVG	Phosphorus level has been lowered however above limit. Fee
WKLY AVG	Weekly Average	AVG	Plant Flooded. High Water on Herrington Lake due to heavy
WKLY AVG	Weekly Average	AVG	UNABLE TO PULL SAMPLE DUE TO FLOOD. HIGH WATE
WKLY AVG	Weekly Average	AVG	
30DA AVG	30 Day Average	AVG	FEEDING ALUMINUM SULFATE FOR PHOSPHORUS
30DA AVG	30 Day Average	AVG	HIGH WATER ON HERRINGTON LAKE EFFLUENT UNDEF
30DA AVG	30 Day Average	AVG	HIGH WATER ON HERRINGTON LAKE EIGHT DAYS PRIC
30DA AVG	30 Day Average	AVG	Lab pulled sample after flood water was below Chlorine Conta
30DA AVG	30 Day Average	AVG	Loss of process control second week of December 2020, Plar
30DA AVG	30 Day Average	AVG	March 14th High Water pushed Sludge out of Plant. Frankfort
30DA AVG	30 Day Average	AVG	PACKAGE PLANT, FEEDING ALUMINUM SULFATE FOR P
30DA AVG	30 Day Average	AVG	Phosphorus level has been lowered however above limit. Fee
30DA AVG	30 Day Average	AVG	Plant Flooded. High Water on Herrington Lake due to heavy
30DA AVG	30 Day Average	AVG	UNABLE TO PULL SAMPLE DUE TO FLOOD. HIGH WATE
30DA AVG	30 Day Average	AVG	
WKLY AVG	Weekly Average	AVG	FEEDING ALUMINUM SULFATE FOR PHOSPHORUS
WKLY AVG	Weekly Average	AVG	HIGH WATER ON HERRINGTON LAKE EFFLUENT UNDEF
WKLY AVG	Weekly Average	AVG	HIGH WATER ON HERRINGTON LAKE EIGHT DAYS PRIC
WKLY AVG	Weekly Average	AVG	Lab pulled sample after flood water was below Chlorine Conta
WKLY AVG	Weekly Average	AVG	Loss of process control second week of December 2020, Plar
WKLY AVG	Weekly Average	AVG	March 14th High Water pushed Sludge out of Plant. Frankfort

WKLY AVG	Weekly Average	AVG	PACKAGE PLANT, FEEDING ALUMINUM SULFATE FOR P
WKLY AVG	Weekly Average	AVG	Phosphorus level has been lowered however above limit. Fee
WKLY AVG	Weekly Average	AVG	Plant Flooded. High Water on Herrington Lake due to heavy
WKLY AVG	Weekly Average	AVG	UNABLE TO PULL SAMPLE DUE TO FLOOD. HIGH WATE
WKLY AVG	Weekly Average	AVG	
30DA AVG	30 Day Average	AVG	FEEDING ALUMINUM SULFATE FOR PHOSPHORUS
30DA AVG	30 Day Average	AVG	HIGH WATER ON HERRINGTON LAKE EFFLUENT UNDER
30DA AVG	30 Day Average	AVG	HIGH WATER ON HERRINGTON LAKE EIGHT DAYS PRI
30DA AVG	30 Day Average	AVG	Lab pulled sample after flood water was below Chlorine Conta
30DA AVG	30 Day Average	AVG	Loss of process control second week of December 2020, Pla
30DA AVG	30 Day Average	AVG	March 14th High Water pushed Sludge out of Plant. Frankfort
30DA AVG	30 Day Average	AVG	PACKAGE PLANT, FEEDING ALUMINUM SULFATE FOR P
30DA AVG	30 Day Average	AVG	Phosphorus level has been lowered however above limit. Fee
30DA AVG	30 Day Average	AVG	Plant Flooded. High Water on Herrington Lake due to heavy
30DA AVG	30 Day Average	AVG	UNABLE TO PULL SAMPLE DUE TO FLOOD. HIGH WATE
30DA AVG	30 Day Average	AVG	
WKLY AVG	Weekly Average	AVG	FEEDING ALUMINUM SULFATE FOR PHOSPHORUS
WKLY AVG	Weekly Average	AVG	HIGH WATER ON HERRINGTON LAKE EFFLUENT UNDER
WKLY AVG	Weekly Average	AVG	HIGH WATER ON HERRINGTON LAKE EIGHT DAYS PRI
WKLY AVG	Weekly Average	AVG	Lab pulled sample after flood water was below Chlorine Conta
WKLY AVG	Weekly Average	AVG	Loss of process control second week of December 2020, Pla
WKLY AVG	Weekly Average	AVG	March 14th High Water pushed Sludge out of Plant. Frankfort
WKLY AVG	Weekly Average	AVG	PACKAGE PLANT, FEEDING ALUMINUM SULFATE FOR P
WKLY AVG	Weekly Average	AVG	Phosphorus level has been lowered however above limit. Fee
WKLY AVG	Weekly Average	AVG	Plant Flooded. High Water on Herrington Lake due to heavy
WKLY AVG	Weekly Average	AVG	UNABLE TO PULL SAMPLE DUE TO FLOOD. HIGH WATE
WKLY AVG	Weekly Average	AVG	
30DA GEO	30 Day Geometric	AVG	FEEDING ALUMINUM SULFATE FOR PHOSPHORUS
30DA GEO	30 Day Geometric	AVG	HIGH WATER ON HERRINGTON LAKE EFFLUENT UNDER
30DA GEO	30 Day Geometric	AVG	HIGH WATER ON HERRINGTON LAKE EIGHT DAYS PRI
30DA GEO	30 Day Geometric	AVG	Lab pulled sample after flood water was below Chlorine Conta
30DA GEO	30 Day Geometric	AVG	Loss of process control second week of December 2020, Pla
30DA GEO	30 Day Geometric	AVG	March 14th High Water pushed Sludge out of Plant. Frankfort
30DA GEO	30 Day Geometric	AVG	PACKAGE PLANT, FEEDING ALUMINUM SULFATE FOR P
30DA GEO	30 Day Geometric	AVG	Phosphorus level has been lowered however above limit. Fee
30DA GEO	30 Day Geometric	AVG	Plant Flooded. High Water on Herrington Lake due to heavy
30DA GEO	30 Day Geometric	AVG	UNABLE TO PULL SAMPLE DUE TO FLOOD. HIGH WATE
30DA GEO	30 Day Geometric	AVG	
7 DA GEO	7 Day Geometric	AVG	FEEDING ALUMINUM SULFATE FOR PHOSPHORUS
7 DA GEO	7 Day Geometric	AVG	HIGH WATER ON HERRINGTON LAKE EFFLUENT UNDER
7 DA GEO	7 Day Geometric	AVG	HIGH WATER ON HERRINGTON LAKE EIGHT DAYS PRI

7 DA GEO	7 Day Geometric	AVG	Lab pulled sample after flood water was below Chlorine Conta		
7 DA GEO	7 Day Geometric	AVG	Loss of process control second week of December 2020, Plan		
7 DA GEO	7 Day Geometric	AVG	March 14th High Water pushed Sludge out of Plant. Frankfort		
7 DA GEO	7 Day Geometric	AVG	PACKAGE PLANT, FEEDING ALUMINUM SULFATE FOR P		
7 DA GEO	7 Day Geometric	AVG	Phosphorus level has been lowered however above limit. Fee		
7 DA GEO	7 Day Geometric	AVG	Plant Flooded. High Water on Herrington Lake due to heavy		
7 DA GEO	7 Day Geometric	AVG	UNABLE TO PULL SAMPLE DUE TO FLOOD. HIGH WATE		
7 DA GEO	7 Day Geometric	AVG			

Modification Type	Modification Effect	Modification Type	Modification Type

RWATER CHLORINE CONTACT TANK BACKED UP END OF 3RD QUARTER. LAB PULLED TEST AFTER WA

OR TO TEST. DE-CHLOR UNIT UNDER WATER AT TIME OF TEST. PHOSPHORUS TREATED WITH ALUM. F

act Tank. Record Rainfall for Central Kentucky. Several High Water Events 2018

nt recovering during time of test. Phosphorus has been an ongoing problem. From October thru March the Lake lev

: Office was notified by Phone. Sample pulled 6 Days later. De-Chlor unit had back up of Lake Water. Phosphorus l

'HOSPHORUS. CHLORINE TAB STUCK IN FEEDER DURING TEST.

ding Aluminum Sulfate to lower. this is a Package Plant never designed for Phosphorus removal.

rains. Lake water backed into Chlorine contact tank.

R ON HERRINGTON LAKE OVER CHLORINE AND DE-CHLOR TANKS.

RWATER CHLORINE CONTACT TANK BACKED UP END OF 3RD QUARTER. LAB PULLED TEST AFTER WA

OR TO TEST. DE-CHLOR UNIT UNDER WATER AT TIME OF TEST. PHOSPHORUS TREATED WITH ALUM. F

act Tank. Record Rainfall for Central Kentucky. Several High Water Events 2018

nt recovering during time of test. Phosphorus has been an ongoing problem. From October thru March the Lake lev

: Office was notified by Phone. Sample pulled 6 Days later. De-Chlor unit had back up of Lake Water. Phosphorus l

'HOSPHORUS. CHLORINE TAB STUCK IN FEEDER DURING TEST.

ding Aluminum Sulfate to lower. this is a Package Plant never designed for Phosphorus removal.

rains. Lake water backed into Chlorine contact tank.

R ON HERRINGTON LAKE OVER CHLORINE AND DE-CHLOR TANKS.

RWATER CHLORINE CONTACT TANK BACKED UP END OF 3RD QUARTER. LAB PULLED TEST AFTER WA

OR TO TEST. DE-CHLOR UNIT UNDER WATER AT TIME OF TEST. PHOSPHORUS TREATED WITH ALUM. F

act Tank. Record Rainfall for Central Kentucky. Several High Water Events 2018

nt recovering during time of test. Phosphorus has been an ongoing problem. From October thru March the Lake lev

: Office was notified by Phone. Sample pulled 6 Days later. De-Chlor unit had back up of Lake Water. Phosphorus l

PHOSPHORUS. CHLORINE TAB STUCK IN FEEDER DURING TEST.

ding Aluminum Sulfate to lower. this is a Package Plant never designed for Phosphorus removal.

rains. Lake water backed into Chlorine contact tank.

R ON HERRINGTON LAKE OVER CHLORINE AND DE-CHLOR TANKS.

RWATER CHLORINE CONTACT TANK BACKED UP END OF 3RD QUARTER. LAB PULLED TEST AFTER WA

OR TO TEST. DE-CHLOR UNIT UNDER WATER AT TIME OF TEST. PHOSPHORUS TREATED WITH ALUM. F

act Tank. Record Rainfall for Central Kentucky. Several High Water Events 2018

nt recovering during time of test. Phosphorus has been an ongoing problem. From October thru March the Lake lev

: Office was notified by Phone. Sample pulled 6 Days later. De-Chlor unit had back up of Lake Water. Phosphorus l

PHOSPHORUS. CHLORINE TAB STUCK IN FEEDER DURING TEST.

ding Aluminum Sulfate to lower. this is a Package Plant never designed for Phosphorus removal.

rains. Lake water backed into Chlorine contact tank.

R ON HERRINGTON LAKE OVER CHLORINE AND DE-CHLOR TANKS.

RWATER CHLORINE CONTACT TANK BACKED UP END OF 3RD QUARTER. LAB PULLED TEST AFTER WA

OR TO TEST. DE-CHLOR UNIT UNDER WATER AT TIME OF TEST. PHOSPHORUS TREATED WITH ALUM. F

act Tank. Record Rainfall for Central Kentucky. Several High Water Events 2018

nt recovering during time of test. Phosphorus has been an ongoing problem. From October thru March the Lake lev

: Office was notified by Phone. Sample pulled 6 Days later. De-Chlor unit had back up of Lake Water. Phosphorus l

PHOSPHORUS. CHLORINE TAB STUCK IN FEEDER DURING TEST.

ding Aluminum Sulfate to lower. this is a Package Plant never designed for Phosphorus removal.

rains. Lake water backed into Chlorine contact tank.

R ON HERRINGTON LAKE OVER CHLORINE AND DE-CHLOR TANKS.

RWATER CHLORINE CONTACT TANK BACKED UP END OF 3RD QUARTER. LAB PULLED TEST AFTER WA

OR TO TEST. DE-CHLOR UNIT UNDER WATER AT TIME OF TEST. PHOSPHORUS TREATED WITH ALUM. F

act Tank. Record Rainfall for Central Kentucky. Several High Water Events 2018

nt recovering during time of test. Phosphorus has been an ongoing problem. From October thru March the Lake lev

: Office was notified by Phone. Sample pulled 6 Days later. De-Chlor unit had back up of Lake Water. Phosphorus l

PHOSPHORUS. CHLORINE TAB STUCK IN FEEDER DURING TEST.

ding Aluminum Sulfate to lower. this is a Package Plant never designed for Phosphorus removal.

rains. Lake water backed into Chlorine contact tank.

R ON HERRINGTON LAKE OVER CHLORINE AND DE-CHLOR TANKS.

RWATER CHLORINE CONTACT TANK BACKED UP END OF 3RD QUARTER. LAB PULLED TEST AFTER WA

OR TO TEST. DE-CHLOR UNIT UNDER WATER AT TIME OF TEST. PHOSPHORUS TREATED WITH ALUM. F

act Tank. Record Rainfall for Central Kentucky. Several High Water Events 2018

nt recovering during time of test. Phosphorus has been an ongoing problem. From October thru March the Lake lev

Office was notified by Phone. Sample pulled 6 Days later. De-Chlor unit had back up of Lake Water. Phosphorus l

HOSPHORUS. CHLORINE TAB STUCK IN FEEDER DURING TEST.

ding Aluminum Sulfate to lower. this is a Package Plant never designed for Phosphorus removal.

rains. Lake water backed into Chlorine contact tank.

R ON HERRINGTON LAKE OVER CHLORINE AND DE-CHLOR TANKS.

RWATER CHLORINE CONTACT TANK BACKED UP END OF 3RD QUARTER. LAB PULLED TEST AFTER WA

OR TO TEST. DE-CHLOR UNIT UNDER WATER AT TIME OF TEST. PHOSPHORUS TREATED WITH ALUM. F

act Tank. Record Rainfall for Central Kentucky. Several High Water Events 2018

nt recovering during time of test. Phosphorus has been an ongoing problem. From October thru March the Lake lev

Office was notified by Phone. Sample pulled 6 Days later. De-Chlor unit had back up of Lake Water. Phosphorus l

HOSPHORUS. CHLORINE TAB STUCK IN FEEDER DURING TEST.

ding Aluminum Sulfate to lower. this is a Package Plant never designed for Phosphorus removal.

rains. Lake water backed into Chlorine contact tank.

R ON HERRINGTON LAKE OVER CHLORINE AND DE-CHLOR TANKS.

RWATER CHLORINE CONTACT TANK BACKED UP END OF 3RD QUARTER. LAB PULLED TEST AFTER WA

OR TO TEST. DE-CHLOR UNIT UNDER WATER AT TIME OF TEST. PHOSPHORUS TREATED WITH ALUM. F

act Tank. Record Rainfall for Central Kentucky. Several High Water Events 2018

nt recovering during time of test. Phosphorus has been an ongoing problem. From October thru March the Lake lev

Office was notified by Phone. Sample pulled 6 Days later. De-Chlor unit had back up of Lake Water. Phosphorus l

HOSPHORUS. CHLORINE TAB STUCK IN FEEDER DURING TEST.

ding Aluminum Sulfate to lower. this is a Package Plant never designed for Phosphorus removal.

rains. Lake water backed into Chlorine contact tank.

R ON HERRINGTON LAKE OVER CHLORINE AND DE-CHLOR TANKS.

RWATER CHLORINE CONTACT TANK BACKED UP END OF 3RD QUARTER. LAB PULLED TEST AFTER WA

OR TO TEST. DE-CHLOR UNIT UNDER WATER AT TIME OF TEST. PHOSPHORUS TREATED WITH ALUM. F

act Tank. Record Rainfall for Central Kentucky. Several High Water Events 2018

nt recovering during time of test. Phosphorus has been an ongoing problem. From October thru March the Lake lev

: Office was notified by Phone. Sample pulled 6 Days later. De-Chlor unit had back up of Lake Water. Phosphorus l

'HOSPHORUS. CHLORINE TAB STUCK IN FEEDER DURING TEST.

ding Aluminum Sulfate to lower. this is a Package Plant never designed for Phosphorus removal.

rains. Lake water backed into Chlorine contact tank.

R ON HERRINGTON LAKE OVER CHLORINE AND DE-CHLOR TANKS.

RWATER CHLORINE CONTACT TANK BACKED UP END OF 3RD QUARTER. LAB PULLED TEST AFTER WA

OR TO TEST. DE-CHLOR UNIT UNDER WATER AT TIME OF TEST. PHOSPHORUS TREATED WITH ALUM. F

act Tank. Record Rainfall for Central Kentucky. Several High Water Events 2018

nt recovering during time of test. Phosphorus has been an ongoing problem. From October thru March the Lake lev

: Office was notified by Phone. Sample pulled 6 Days later. De-Chlor unit had back up of Lake Water. Phosphorus l

'HOSPHORUS. CHLORINE TAB STUCK IN FEEDER DURING TEST.

ding Aluminum Sulfate to lower. this is a Package Plant never designed for Phosphorus removal.

rains. Lake water backed into Chlorine contact tank.

R ON HERRINGTON LAKE OVER CHLORINE AND DE-CHLOR TANKS.

RWATER CHLORINE CONTACT TANK BACKED UP END OF 3RD QUARTER. LAB PULLED TEST AFTER WA

OR TO TEST. DE-CHLOR UNIT UNDER WATER AT TIME OF TEST. PHOSPHORUS TREATED WITH ALUM. F

act Tank. Record Rainfall for Central Kentucky. Several High Water Events 2018

nt recovering during time of test. Phosphorus has been an ongoing problem. From October thru March the Lake lev

: Office was notified by Phone. Sample pulled 6 Days later. De-Chlor unit had back up of Lake Water. Phosphorus l

'HOSPHORUS. CHLORINE TAB STUCK IN FEEDER DURING TEST.

ding Aluminum Sulfate to lower. this is a Package Plant never designed for Phosphorus removal.

rains. Lake water backed into Chlorine contact tank.

R ON HERRINGTON LAKE OVER CHLORINE AND DE-CHLOR TANKS.

RWATER CHLORINE CONTACT TANK BACKED UP END OF 3RD QUARTER. LAB PULLED TEST AFTER WA

OR TO TEST. DE-CHLOR UNIT UNDER WATER AT TIME OF TEST. PHOSPHORUS TREATED WITH ALUM. F

act Tank. Record Rainfall for Central Kentucky. Several High Water Events 2018

nt recovering during time of test. Phosphorus has been an ongoing problem. From October thru March the Lake lev

: Office was notified by Phone. Sample pulled 6 Days later. De-Chlor unit had back up of Lake Water. Phosphorus l

'HOSPHORUS. CHLORINE TAB STUCK IN FEEDER DURING TEST.

ding Aluminum Sulfate to lower. this is a Package Plant never designed for Phosphorus removal.

rains. Lake water backed into Chlorine contact tank.

R ON HERRINGTON LAKE OVER CHLORINE AND DE-CHLOR TANKS.

RWATER CHLORINE CONTACT TANK BACKED UP END OF 3RD QUARTER. LAB PULLED TEST AFTER WA

OR TO TEST. DE-CHLOR UNIT UNDER WATER AT TIME OF TEST. PHOSPHORUS TREATED WITH ALUM. F

act Tank. Record Rainfall for Central Kentucky. Several High Water Events 2018

nt recovering during time of test. Phosphorus has been an ongoing problem. From October thru March the Lake lev

: Office was notified by Phone. Sample pulled 6 Days later. De-Chlor unit had back up of Lake Water. Phosphorus l

PHOSPHORUS. CHLORINE TAB STUCK IN FEEDER DURING TEST.

ding Aluminum Sulfate to lower. this is a Package Plant never designed for Phosphorus removal.

rains. Lake water backed into Chlorine contact tank.

R ON HERRINGTON LAKE OVER CHLORINE AND DE-CHLOR TANKS.

RWATER CHLORINE CONTACT TANK BACKED UP END OF 3RD QUARTER. LAB PULLED TEST AFTER WA

OR TO TEST. DE-CHLOR UNIT UNDER WATER AT TIME OF TEST. PHOSPHORUS TREATED WITH ALUM. F

act Tank. Record Rainfall for Central Kentucky. Several High Water Events 2018

nt recovering during time of test. Phosphorus has been an ongoing problem. From October thru March the Lake lev

: Office was notified by Phone. Sample pulled 6 Days later. De-Chlor unit had back up of Lake Water. Phosphorus l

PHOSPHORUS. CHLORINE TAB STUCK IN FEEDER DURING TEST.

ding Aluminum Sulfate to lower. this is a Package Plant never designed for Phosphorus removal.

rains. Lake water backed into Chlorine contact tank.

R ON HERRINGTON LAKE OVER CHLORINE AND DE-CHLOR TANKS.

RWATER CHLORINE CONTACT TANK BACKED UP END OF 3RD QUARTER. LAB PULLED TEST AFTER WA

OR TO TEST. DE-CHLOR UNIT UNDER WATER AT TIME OF TEST. PHOSPHORUS TREATED WITH ALUM. F

act Tank. Record Rainfall for Central Kentucky. Several High Water Events 2018

nt recovering during time of test. Phosphorus has been an ongoing problem. From October thru March the Lake lev

: Office was notified by Phone. Sample pulled 6 Days later. De-Chlor unit had back up of Lake Water. Phosphorus l

PHOSPHORUS. CHLORINE TAB STUCK IN FEEDER DURING TEST.

ding Aluminum Sulfate to lower. this is a Package Plant never designed for Phosphorus removal.

rains. Lake water backed into Chlorine contact tank.

R ON HERRINGTON LAKE OVER CHLORINE AND DE-CHLOR TANKS.

RWATER CHLORINE CONTACT TANK BACKED UP END OF 3RD QUARTER. LAB PULLED TEST AFTER WA

OR TO TEST. DE-CHLOR UNIT UNDER WATER AT TIME OF TEST. PHOSPHORUS TREATED WITH ALUM. F

act Tank. Record Rainfall for Central Kentucky. Several High Water Events 2018

nt recovering during time of test. Phosphorus has been an ongoing problem. From October thru March the Lake lev

: Office was notified by Phone. Sample pulled 6 Days later. De-Chlor unit had back up of Lake Water. Phosphorus l

PHOSPHORUS. CHLORINE TAB STUCK IN FEEDER DURING TEST.

ding Aluminum Sulfate to lower. this is a Package Plant never designed for Phosphorus removal.

rains. Lake water backed into Chlorine contact tank.

R ON HERRINGTON LAKE OVER CHLORINE AND DE-CHLOR TANKS.

RWATER CHLORINE CONTACT TANK BACKED UP END OF 3RD QUARTER. LAB PULLED TEST AFTER WA

OR TO TEST. DE-CHLOR UNIT UNDER WATER AT TIME OF TEST. PHOSPHORUS TREATED WITH ALUM. F

act Tank. Record Rainfall for Central Kentucky. Several High Water Events 2018

nt recovering during time of test. Phosphorus has been an ongoing problem. From October thru March the Lake lev

: Office was notified by Phone. Sample pulled 6 Days later. De-Chlor unit had back up of Lake Water. Phosphorus l

HOSPHORUS. CHLORINE TAB STUCK IN FEEDER DURING TEST.

ding Aluminum Sulfate to lower. this is a Package Plant never designed for Phosphorus removal.

rains. Lake water backed into Chlorine contact tank.

R ON HERRINGTON LAKE OVER CHLORINE AND DE-CHLOR TANKS.

RWATER CHLORINE CONTACT TANK BACKED UP END OF 3RD QUARTER. LAB PULLED TEST AFTER WA

OR TO TEST. DE-CHLOR UNIT UNDER WATER AT TIME OF TEST. PHOSPHORUS TREATED WITH ALUM. F

act Tank. Record Rainfall for Central Kentucky. Several High Water Events 2018

nt recovering during time of test. Phosphorus has been an ongoing problem. From October thru March the Lake lev

: Office was notified by Phone. Sample pulled 6 Days later. De-Chlor unit had back up of Lake Water. Phosphorus l

HOSPHORUS. CHLORINE TAB STUCK IN FEEDER DURING TEST.

ding Aluminum Sulfate to lower. this is a Package Plant never designed for Phosphorus removal.

rains. Lake water backed into Chlorine contact tank.

R ON HERRINGTON LAKE OVER CHLORINE AND DE-CHLOR TANKS.

RWATER CHLORINE CONTACT TANK BACKED UP END OF 3RD QUARTER. LAB PULLED TEST AFTER WA

OR TO TEST. DE-CHLOR UNIT UNDER WATER AT TIME OF TEST. PHOSPHORUS TREATED WITH ALUM. F

act Tank. Record Rainfall for Central Kentucky. Several High Water Events 2018

nt recovering during time of test. Phosphorus has been an ongoing problem. From October thru March the Lake lev

: Office was notified by Phone. Sample pulled 6 Days later. De-Chlor unit had back up of Lake Water. Phosphorus l

HOSPHORUS. CHLORINE TAB STUCK IN FEEDER DURING TEST.

ding Aluminum Sulfate to lower. this is a Package Plant never designed for Phosphorus removal.

rains. Lake water backed into Chlorine contact tank.

R ON HERRINGTON LAKE OVER CHLORINE AND DE-CHLOR TANKS.

RWATER CHLORINE CONTACT TANK BACKED UP END OF 3RD QUARTER. LAB PULLED TEST AFTER WA

OR TO TEST. DE-CHLOR UNIT UNDER WATER AT TIME OF TEST. PHOSPHORUS TREATED WITH ALUM. F

act Tank. Record Rainfall for Central Kentucky. Several High Water Events 2018

nt recovering during time of test. Phosphorus has been an ongoing problem. From October thru March the Lake lev

: Office was notified by Phone. Sample pulled 6 Days later. De-Chlor unit had back up of Lake Water. Phosphorus l

'HOSPHORUS. CHLORINE TAB STUCK IN FEEDER DURING TEST.

ding Aluminum Sulfate to lower. this is a Package Plant never designed for Phosphorus removal.

rains. Lake water backed into Chlorine contact tank.

R ON HERRINGTON LAKE OVER CHLORINE AND DE-CHLOR TANKS.

RWATER CHLORINE CONTACT TANK BACKED UP END OF 3RD QUARTER. LAB PULLED TEST AFTER WA

OR TO TEST. DE-CHLOR UNIT UNDER WATER AT TIME OF TEST. PHOSPHORUS TREATED WITH ALUM. F

act Tank. Record Rainfall for Central Kentucky. Several High Water Events 2018

nt recovering during time of test. Phosphorus has been an ongoing problem. From October thru March the Lake lev

: Office was notified by Phone. Sample pulled 6 Days later. De-Chlor unit had back up of Lake Water. Phosphorus l

'HOSPHORUS. CHLORINE TAB STUCK IN FEEDER DURING TEST.

ding Aluminum Sulfate to lower. this is a Package Plant never designed for Phosphorus removal.

rains. Lake water backed into Chlorine contact tank.

R ON HERRINGTON LAKE OVER CHLORINE AND DE-CHLOR TANKS.

RWATER CHLORINE CONTACT TANK BACKED UP END OF 3RD QUARTER. LAB PULLED TEST AFTER WA

OR TO TEST. DE-CHLOR UNIT UNDER WATER AT TIME OF TEST. PHOSPHORUS TREATED WITH ALUM. F

act Tank. Record Rainfall for Central Kentucky. Several High Water Events 2018

nt recovering during time of test. Phosphorus has been an ongoing problem. From October thru March the Lake lev

: Office was notified by Phone. Sample pulled 6 Days later. De-Chlor unit had back up of Lake Water. Phosphorus l

'HOSPHORUS. CHLORINE TAB STUCK IN FEEDER DURING TEST.

ding Aluminum Sulfate to lower. this is a Package Plant never designed for Phosphorus removal.

rains. Lake water backed into Chlorine contact tank.

R ON HERRINGTON LAKE OVER CHLORINE AND DE-CHLOR TANKS.

RWATER CHLORINE CONTACT TANK BACKED UP END OF 3RD QUARTER. LAB PULLED TEST AFTER WA

OR TO TEST. DE-CHLOR UNIT UNDER WATER AT TIME OF TEST. PHOSPHORUS TREATED WITH ALUM. F

act Tank. Record Rainfall for Central Kentucky. Several High Water Events 2018

nt recovering during time of test. Phosphorus has been an ongoing problem. From October thru March the Lake lev

: Office was notified by Phone. Sample pulled 6 Days later. De-Chlor unit had back up of Lake Water. Phosphorus l

'HOSPHORUS. CHLORINE TAB STUCK IN FEEDER DURING TEST.

ding Aluminum Sulfate to lower. this is a Package Plant never designed for Phosphorus removal.

rains. Lake water backed into Chlorine contact tank.

R ON HERRINGTON LAKE OVER CHLORINE AND DE-CHLOR TANKS.

RWATER CHLORINE CONTACT TANK BACKED UP END OF 3RD QUARTER. LAB PULLED TEST AFTER WA

OR TO TEST. DE-CHLOR UNIT UNDER WATER AT TIME OF TEST. PHOSPHORUS TREATED WITH ALUM. F

act Tank. Record Rainfall for Central Kentucky. Several High Water Events 2018
nt recovering during time of test. Phosphorus has been an ongoing problem. From October thru March the Lake lev
Office was notified by Phone. Sample pulled 6 Days later. De-Chlor unit had back up of Lake Water. Phosphorus l
HOSPHORUS. CHLORINE TAB STUCK IN FEEDER DURING TEST.
ding Aluminum Sulfate to lower. this is a Package Plant never designed for Phosphorus removal.
rains. Lake water backed into Chlorine contact tank.
R ON HERRINGTON LAKE OVER CHLORINE AND DE-CHLOR TANKS.

TER WENT DOWN HOWEVER THIS WAS NOVEMBER WHICH WILL BE REPORTED IN THE 4TH QUARTER
PLANT NOT DESIGNED TO REMOVE PHOSPHORUS.

vel is held around 725. During this time the waters edge is about 200 feet from discharge. The discharge from the pl
has been a problem since it was added to permit, as this Plant was never designed for removal.

TER WENT DOWN HOWEVER THIS WAS NOVEMBER WHICH WILL BE REPORTED IN THE 4TH QUARTER
PLANT NOT DESIGNED TO REMOVE PHOSPHORUS.

vel is held around 725. During this time the waters edge is about 200 feet from discharge. The discharge from the pl
has been a problem since it was added to permit, as this Plant was never designed for removal.

TER WENT DOWN HOWEVER THIS WAS NOVEMBER WHICH WILL BE REPORTED IN THE 4TH QUARTER
›LANT NOT DESIGNED TO REMOVE PHOSPHORUS.

/el is held around 725. During this time the waters edge is about 200 feet from discharge. The discharge from the pl
has been a problem since it was added to permit, as this Plant was never designed for removal.

TER WENT DOWN HOWEVER THIS WAS NOVEMBER WHICH WILL BE REPORTED IN THE 4TH QUARTER
›LANT NOT DESIGNED TO REMOVE PHOSPHORUS.

/el is held around 725. During this time the waters edge is about 200 feet from discharge. The discharge from the pl
has been a problem since it was added to permit, as this Plant was never designed for removal.

TER WENT DOWN HOWEVER THIS WAS NOVEMBER WHICH WILL BE REPORTED IN THE 4TH QUARTER
›LANT NOT DESIGNED TO REMOVE PHOSPHORUS.

/el is held around 725. During this time the waters edge is about 200 feet from discharge. The discharge from the pl
has been a problem since it was added to permit, as this Plant was never designed for removal.

TER WENT DOWN HOWEVER THIS WAS NOVEMBER WHICH WILL BE REPORTED IN THE 4TH QUARTER
›LANT NOT DESIGNED TO REMOVE PHOSPHORUS.

/el is held around 725. During this time the waters edge is about 200 feet from discharge. The discharge from the pl
has been a problem since it was added to permit, as this Plant was never designed for removal.

TER WENT DOWN HOWEVER THIS WAS NOVEMBER WHICH WILL BE REPORTED IN THE 4TH QUARTER
ᵖLANT NOT DESIGNED TO REMOVE PHOSPHORUS.

ᵛel is held around 725. During this time the waters edge is about 200 feet from discharge. The discharge from the pl
has been a problem since it was added to permit, as this Plant was never designed for removal.

TER WENT DOWN HOWEVER THIS WAS NOVEMBER WHICH WILL BE REPORTED IN THE 4TH QUARTER
ᵖLANT NOT DESIGNED TO REMOVE PHOSPHORUS.

ᵛel is held around 725. During this time the waters edge is about 200 feet from discharge. The discharge from the pl
has been a problem since it was added to permit, as this Plant was never designed for removal.

TER WENT DOWN HOWEVER THIS WAS NOVEMBER WHICH WILL BE REPORTED IN THE 4TH QUARTER
ᵖLANT NOT DESIGNED TO REMOVE PHOSPHORUS.

ᵛel is held around 725. During this time the waters edge is about 200 feet from discharge. The discharge from the pl
has been a problem since it was added to permit, as this Plant was never designed for removal.

TER WENT DOWN HOWEVER THIS WAS NOVEMBER WHICH WILL BE REPORTED IN THE 4TH QUARTER
ᵖLANT NOT DESIGNED TO REMOVE PHOSPHORUS.

vel is held around 725. During this time the waters edge is about 200 feet from discharge. The discharge from the pl
has been a problem since it was added to permit, as this Plant was never designed for removal.

TER WENT DOWN HOWEVER THIS WAS NOVEMBER WHICH WILL BE REPORTED IN THE 4TH QUARTER
PLANT NOT DESIGNED TO REMOVE PHOSPHORUS.

vel is held around 725. During this time the waters edge is about 200 feet from discharge. The discharge from the pl
has been a problem since it was added to permit, as this Plant was never designed for removal.

TER WENT DOWN HOWEVER THIS WAS NOVEMBER WHICH WILL BE REPORTED IN THE 4TH QUARTER
PLANT NOT DESIGNED TO REMOVE PHOSPHORUS.

vel is held around 725. During this time the waters edge is about 200 feet from discharge. The discharge from the pl
has been a problem since it was added to permit, as this Plant was never designed for removal.

TER WENT DOWN HOWEVER THIS WAS NOVEMBER WHICH WILL BE REPORTED IN THE 4TH QUARTER
PLANT NOT DESIGNED TO REMOVE PHOSPHORUS.

vel is held around 725. During this time the waters edge is about 200 feet from discharge. The discharge from the pl
has been a problem since it was added to permit, as this Plant was never designed for removal.

TER WENT DOWN HOWEVER THIS WAS NOVEMBER WHICH WILL BE REPORTED IN THE 4TH QUARTER
›LANT NOT DESIGNED TO REMOVE PHOSPHORUS.

/el is held around 725. During this time the waters edge is about 200 feet from discharge. The discharge from the pl
has been a problem since it was added to permit, as this Plant was never designed for removal.

TER WENT DOWN HOWEVER THIS WAS NOVEMBER WHICH WILL BE REPORTED IN THE 4TH QUARTER
›LANT NOT DESIGNED TO REMOVE PHOSPHORUS.

/el is held around 725. During this time the waters edge is about 200 feet from discharge. The discharge from the pl
has been a problem since it was added to permit, as this Plant was never designed for removal.

TER WENT DOWN HOWEVER THIS WAS NOVEMBER WHICH WILL BE REPORTED IN THE 4TH QUARTER
›LANT NOT DESIGNED TO REMOVE PHOSPHORUS.

/el is held around 725. During this time the waters edge is about 200 feet from discharge. The discharge from the pl
has been a problem since it was added to permit, as this Plant was never designed for removal.

TER WENT DOWN HOWEVER THIS WAS NOVEMBER WHICH WILL BE REPORTED IN THE 4TH QUARTER
›LANT NOT DESIGNED TO REMOVE PHOSPHORUS.

/el is held around 725. During this time the waters edge is about 200 feet from discharge. The discharge from the pl
has been a problem since it was added to permit, as this Plant was never designed for removal.

TER WENT DOWN HOWEVER THIS WAS NOVEMBER WHICH WILL BE REPORTED IN THE 4TH QUARTER
PLANT NOT DESIGNED TO REMOVE PHOSPHORUS.

vel is held around 725. During this time the waters edge is about 200 feet from discharge. The discharge from the pl
has been a problem since it was added to permit, as this Plant was never designed for removal.

TER WENT DOWN HOWEVER THIS WAS NOVEMBER WHICH WILL BE REPORTED IN THE 4TH QUARTER
PLANT NOT DESIGNED TO REMOVE PHOSPHORUS.

vel is held around 725. During this time the waters edge is about 200 feet from discharge. The discharge from the pl
has been a problem since it was added to permit, as this Plant was never designed for removal.

TER WENT DOWN HOWEVER THIS WAS NOVEMBER WHICH WILL BE REPORTED IN THE 4TH QUARTER
PLANT NOT DESIGNED TO REMOVE PHOSPHORUS.

vel is held around 725. During this time the waters edge is about 200 feet from discharge. The discharge from the pl
has been a problem since it was added to permit, as this Plant was never designed for removal.

TER WENT DOWN HOWEVER THIS WAS NOVEMBER WHICH WILL BE REPORTED IN THE 4TH QUARTER
PLANT NOT DESIGNED TO REMOVE PHOSPHORUS.

vel is held around 725. During this time the waters edge is about 200 feet from discharge. The discharge from the pl
has been a problem since it was added to permit, as this Plant was never designed for removal.

TER WENT DOWN HOWEVER THIS WAS NOVEMBER WHICH WILL BE REPORTED IN THE 4TH QUARTER
PLANT NOT DESIGNED TO REMOVE PHOSPHORUS.

vel is held around 725. During this time the waters edge is about 200 feet from discharge. The discharge from the pl
has been a problem since it was added to permit, as this Plant was never designed for removal.

TER WENT DOWN HOWEVER THIS WAS NOVEMBER WHICH WILL BE REPORTED IN THE 4TH QUARTER
PLANT NOT DESIGNED TO REMOVE PHOSPHORUS.

vel is held around 725. During this time the waters edge is about 200 feet from discharge. The discharge from the pl
has been a problem since it was added to permit, as this Plant was never designed for removal.

TER WENT DOWN HOWEVER THIS WAS NOVEMBER WHICH WILL BE REPORTED IN THE 4TH QUARTER
PLANT NOT DESIGNED TO REMOVE PHOSPHORUS.

vel is held around 725. During this time the waters edge is about 200 feet from discharge. The discharge from the pl
has been a problem since it was added to permit, as this Plant was never designed for removal.

TER WENT DOWN HOWEVER THIS WAS NOVEMBER WHICH WILL BE REPORTED IN THE 4TH QUARTER
PLANT NOT DESIGNED TO REMOVE PHOSPHORUS.

vel is held around 725. During this time the waters edge is about 200 feet from discharge. The discharge from the pl
has been a problem since it was added to permit, as this Plant was never designed for removal.

.

ant is absorbed into ground and never makes it to waters edge.

.

ant is absorbed into ground and never makes it to waters edge.

.

ant is absorbed into ground and never makes it to waters edge.

.

ant is absorbed into ground and never makes it to waters edge.

.

ant is absorbed into ground and never makes it to waters edge.

.

ant is absorbed into ground and never makes it to waters edge.

.

ant is absorbed into ground and never makes it to waters edge.

.

ant is absorbed into ground and never makes it to waters edge.

.

ant is absorbed into ground and never makes it to waters edge.

.

ant is absorbed into ground and never makes it to waters edge.

.

ant is absorbed into ground and never makes it to waters edge.

.

ant is absorbed into ground and never makes it to waters edge.

.

ant is absorbed into ground and never makes it to waters edge.

.

ant is absorbed into ground and never makes it to waters edge.

.

ant is absorbed into ground and never makes it to waters edge.

.

ant is absorbed into ground and never makes it to waters edge.

.

ant is absorbed into ground and never makes it to waters edge.

.

ant is absorbed into ground and never makes it to waters edge.

.

ant is absorbed into ground and never makes it to waters edge.

.

ant is absorbed into ground and never makes it to waters edge.

.

ant is absorbed into ground and never makes it to waters edge.

.

ant is absorbed into ground and never makes it to waters edge.

.

ant is absorbed into ground and never makes it to waters edge.

.

ant is absorbed into ground and never makes it to waters edge.

.

ant is absorbed into ground and never makes it to waters edge.

Environmental Protection Agency
Integrated Compliance Information System
DMR Data Report

Version 1.0, modified 08/12/2011
Created Date: 05/02/2011
Last Refresh Date: 04/29/2022

Report Selection Criteri

NPDES ID(s): KY0053431
State Code: KY
Region Code(s):
SIC Code(s):
NAICS Code(s):
Major/Minor Indicator:
County(ies):
Permit Type(s):
Permit Status(es):
Monitoring Period Date Range: 01/01/2018 - 04/
Violation Type: All Data
Parameter Code(s):
State Water Body(ies):

NODI Code	Acceptable?
1	N
2	Y
3	Y
4	Y
5	Y
6	N
7	Y
8	N
9	Y
A	Y
B	Y
C	Y
D	N
E	N
F	Y
G	N
H	N
I	Y
J	Y
K	Y
L	N
M	N
N	Y
P	N
Q	Y
R	Y
S	Y
T	Y
V	Y

W	Y
X	N
Y	Y

29/2022

NODI Desc
Wrong Flow
Operation Shutdown
Special Report Attached
Discharge to Lagoon/Groundwater
Frozen Conditions
State-specific No Data Indicator - Invalid
No Influent
Other (See Comments)
Conditional Monitoring - Not Required This Period
General Permit Exemption
Below Detection Limit/No Detection
No Discharge
Lost Sample/Data Not Available
Failed to Sample/Required Analysis Not Conducted
Insufficient Flow for Sampling
Sampling Equipment Failure
Invalid Test
Land Applied
Recycled - Water-Closed System
Natural Disaster
DMR Received but not Entered
Laboratory Error
Not Constructed
Laboratory Error or Invalid Test
Not Quantifiable
Administratively Resolved
Fire Conditions
Environmental Conditions - Monitoring Not Possible
Weather Related

Dry Lysimeter/Well
Parameter/Value Not Reported
State-specific No Data Indicator - Valid

NPDES ID	State Code	Region Code	Permit Name	Permittee Address	Facility Name	County	Major Minor Indicator	Permit Type	Permit Status	Federal Grant Flag	Primary SIC Code	Primary NAICS Code	State Water Body	Lat/Long.Latitude in Decimal Degrees	Lat/Long.Longitude in Decimal Degrees	Limit Set	Param Cd - MLC - Season ID	Parameter	Mon. Loc. Desc.	Limit Type Code
KY0053431	KY	04	Herrington Haven Subdivision	1650 Des Peres Rd Ste 303 Des Peres, MO 63131	HERRINGTON HAVEN SUBDIVISION	Garrard	Minor	NPDES Individual Permit	Admin Continued	N	6552	237210	051002050017-DIX RIVER	37.661389	-84.689722	001-1	00300-1-0	Oxygen, dissolved [DO]	Effluent Gross	ENF
KY0053431	KY	04	Herrington Haven Subdivision	1650 Des Peres Rd Ste 303 Des Peres, MO 63131	HERRINGTON HAVEN SUBDIVISION	Garrard	Minor	NPDES Individual Permit	Admin Continued	N	6552	237210	051002050017-DIX RIVER	37.661389	-84.689722	001-1	00310-1-0	BOD, 5-day, 20 deg. C	Effluent Gross	ENF
KY0053431	KY	04	Herrington Haven Subdivision	1650 Des Peres Rd Ste 303 Des Peres, MO 63131	HERRINGTON HAVEN SUBDIVISION	Garrard	Minor	NPDES Individual Permit	Admin Continued	N	6552	237210	051002050017-DIX RIVER	37.661389	-84.689722	001-1	00400-1-0	pH	Effluent Gross	ENF
KY0053431	KY	04	Herrington Haven Subdivision	1650 Des Peres Rd Ste 303 Des Peres, MO 63131	HERRINGTON HAVEN SUBDIVISION	Garrard	Minor	NPDES Individual Permit	Admin Continued	N	6552	237210	051002050017-DIX RIVER	37.661389	-84.689722	001-1	00530-1-0	Solids, total suspended	Effluent Gross	ENF
KY0053431	KY	04	Herrington Haven Subdivision	1650 Des Peres Rd Ste 303 Des Peres, MO 63131	HERRINGTON HAVEN SUBDIVISION	Garrard	Minor	NPDES Individual Permit	Admin Continued	N	6552	237210	051002050017-DIX RIVER	37.661389	-84.689722	001-1	00600-1-0	Nitrogen, total [as N]	Effluent Gross	ENF
KY0053431	KY	04	Herrington Haven Subdivision	1650 Des Peres Rd Ste 303 Des Peres, MO 63131	HERRINGTON HAVEN SUBDIVISION	Garrard	Minor	NPDES Individual Permit	Admin Continued	N	6552	237210	051002050017-DIX RIVER	37.661389	-84.689722	001-1	00610-1-0	Nitrogen, ammonia total [as N]	Effluent Gross	ENF
KY0053431	KY	04	Herrington Haven Subdivision	1650 Des Peres Rd Ste 303 Des Peres, MO 63131	HERRINGTON HAVEN SUBDIVISION	Garrard	Minor	NPDES Individual Permit	Admin Continued	N	6552	237210	051002050017-DIX RIVER	37.661389	-84.689722	001-1	00665-1-0	Phosphorus, total [as P]	Effluent Gross	ENF
KY0053431	KY	04	Herrington Haven Subdivision	1650 Des Peres Rd Ste 303 Des Peres, MO 63131	HERRINGTON HAVEN SUBDIVISION	Garrard	Minor	NPDES Individual Permit	Admin Continued	N	6552	237210	051002050017-DIX RIVER	37.661389	-84.689722	001-1	50050-1-0	Flow, in conduit or thru treatment plant	Effluent Gross	ENF
KY0053431	KY	04	Herrington Haven Subdivision	1650 Des Peres Rd Ste 303 Des Peres, MO 63131	HERRINGTON HAVEN SUBDIVISION	Garrard	Minor	NPDES Individual Permit	Admin Continued	N	6552	237210	051002050017-DIX RIVER	37.661389	-84.689722	001-1	50060-1-0	Chlorine, total residual	Effluent Gross	ENF
KY0053431	KY	04	Herrington Haven Subdivision	1650 Des Peres Rd Ste 303 Des Peres, MO 63131	HERRINGTON HAVEN SUBDIVISION	Garrard	Minor	NPDES Individual Permit	Admin Continued	N	6552	237210	051002050017-DIX RIVER	37.661389	-84.689722	001-1	51040-1-0	E. coli	Effluent Gross	ENF
KY0053431	KY	04	Herrington Haven Subdivision	1650 Des Peres Rd Ste 303 Des Peres, MO 63131	HERRINGTON HAVEN SUBDIVISION	Garrard	Minor	NPDES Individual Permit	Effective	N	6552	237210	051002050017-DIX RIVER	37.661389	-84.689722	001-2	00300-1-0	Oxygen, dissolved [DO]	Effluent Gross	ENF
KY0053431	KY	04	Herrington Haven Subdivision	1650 Des Peres Rd Ste 303 Des Peres, MO 63131	HERRINGTON HAVEN SUBDIVISION	Garrard	Minor	NPDES Individual Permit	Effective	N	6552	237210	051002050017-DIX RIVER	37.661389	-84.689722	001-2	00310-1-0	BOD, 5-day, 20 deg. C	Effluent Gross	ENF
KY0053431	KY	04	Herrington Haven Subdivision	1650 Des Peres Rd Ste 303 Des Peres, MO 63131	HERRINGTON HAVEN SUBDIVISION	Garrard	Minor	NPDES Individual Permit	Effective	N	6552	237210	051002050017-DIX RIVER	37.661389	-84.689722	001-2	00400-1-0	pH	Effluent Gross	ENF
KY0053431	KY	04	Herrington Haven Subdivision	1650 Des Peres Rd Ste 303 Des Peres, MO 63131	HERRINGTON HAVEN SUBDIVISION	Garrard	Minor	NPDES Individual Permit	Effective	N	6552	237210	051002050017-DIX RIVER	37.661389	-84.689722	001-2	00530-1-0	Solids, total suspended	Effluent Gross	ENF
KY0053431	KY	04	Herrington Haven Subdivision	1650 Des Peres Rd Ste 303 Des Peres, MO 63131	HERRINGTON HAVEN SUBDIVISION	Garrard	Minor	NPDES Individual Permit	Effective	N	6552	237210	051002050017-DIX RIVER	37.661389	-84.689722	001-2	00600-1-0	Nitrogen, total [as N]	Effluent Gross	ENF
KY0053431	KY	04	Herrington Haven Subdivision	1650 Des Peres Rd Ste 303 Des Peres, MO 63131	HERRINGTON HAVEN SUBDIVISION	Garrard	Minor	NPDES Individual Permit	Effective	N	6552	237210	051002050017-DIX RIVER	37.661389	-84.689722	001-2	00610-1-0	Nitrogen, ammonia total [as N]	Effluent Gross	ENF
KY0053431	KY	04	Herrington Haven Subdivision	1650 Des Peres Rd Ste 303 Des Peres, MO 63131	HERRINGTON HAVEN SUBDIVISION	Garrard	Minor	NPDES Individual Permit	Effective	N	6552	237210	051002050017-DIX RIVER	37.661389	-84.689722	001-2	00665-1-0	Phosphorus, total [as P]	Effluent Gross	ENF
KY0053431	KY	04	Herrington Haven Subdivision	1650 Des Peres Rd Ste 303 Des Peres, MO 63131	HERRINGTON HAVEN SUBDIVISION	Garrard	Minor	NPDES Individual Permit	Effective	N	6552	237210	051002050017-DIX RIVER	37.661389	-84.689722	001-2	50050-1-0	Flow, in conduit or thru treatment plant	Effluent Gross	ENF
KY0053431	KY	04	Herrington Haven Subdivision	1650 Des Peres Rd Ste 303 Des Peres, MO 63131	HERRINGTON HAVEN SUBDIVISION	Garrard	Minor	NPDES Individual Permit	Effective	N	6552	237210	051002050017-DIX RIVER	37.661389	-84.689722	001-2	50060-1-0	Chlorine, total residual	Effluent Gross	ENF
KY0053431	KY	04	Herrington Haven Subdivision	1650 Des Peres Rd Ste 303 Des Peres, MO 63131	HERRINGTON HAVEN SUBDIVISION	Garrard	Minor	NPDES Individual Permit	Effective	N	6552	237210	051002050017-DIX RIVER	37.661389	-84.689722	001-2	51040-1-0	E. coli	Effluent Gross	ENF

NPDES ID	Permit Name	County Name	Perm Feature ID-Limit Set	Mon. Period End Date	Parameter Desc	Param Cd - MLC - Season ID	Monitoring Location Desc	Worst % exced.	Quantity 1	Q1 DMR Value Unit Short Desc	Quantity 2	Q2 DMR Value Unit Short Desc	Limit Value - Quantity Units	Concentration 1	C1 DMR Value Unit Short Desc	Concentration 2	C2 DMR Value Unit Short Desc	Concentration 3	C3 DMR Value Unit Short Desc	Limit Value - Concentration Units	Effluent Vio. Exists
KY0053431	Herrington Haven Subdivision	Garrard	001-1	12/31/2021	Oxygen, dissolved [DO]	00300-1-0	Effluent Gross							6.2	mg/L					mg/L	N
KY0053431	Herrington Haven Subdivision	Garrard	001-1	09/30/2021	Oxygen, dissolved [DO]	00300-1-0	Effluent Gross							7.6	mg/L					mg/L	N
KY0053431	Herrington Haven Subdivision	Garrard	001-1	06/30/2021	Oxygen, dissolved [DO]	00300-1-0	Effluent Gross							9.6	mg/L					mg/L	N
KY0053431	Herrington Haven Subdivision	Garrard	001-1	03/31/2021	Oxygen, dissolved [DO]	00300-1-0	Effluent Gross							5.7	mg/L					mg/L	N
KY0053431	Herrington Haven Subdivision	Garrard	001-1	12/31/2020	Oxygen, dissolved [DO]	00300-1-0	Effluent Gross							8.3	mg/L					mg/L	N
KY0053431	Herrington Haven Subdivision	Garrard	001-1	09/30/2020	Oxygen, dissolved [DO]	00300-1-0	Effluent Gross							7.5	mg/L					mg/L	N
KY0053431	Herrington Haven Subdivision	Garrard	001-1	06/30/2020	Oxygen, dissolved [DO]	00300-1-0	Effluent Gross							7.1	mg/L					mg/L	N
KY0053431	Herrington Haven Subdivision	Garrard	001-1	03/31/2020	Oxygen, dissolved [DO]	00300-1-0	Effluent Gross							7.4	mg/L					mg/L	N
KY0053431	Herrington Haven Subdivision	Garrard	001-1	12/31/2019	Oxygen, dissolved [DO]	00300-1-0	Effluent Gross							NODI V						mg/L	N
KY0053431	Herrington Haven Subdivision	Garrard	001-1	09/30/2019	Oxygen, dissolved [DO]	00300-1-0	Effluent Gross							7.4	mg/L					mg/L	N
KY0053431	Herrington Haven Subdivision	Garrard	001-1	06/30/2019	Oxygen, dissolved [DO]	00300-1-0	Effluent Gross							7.4	mg/L					mg/L	N
KY0053431	Herrington Haven Subdivision	Garrard	001-1	03/31/2019	Oxygen, dissolved [DO]	00300-1-0	Effluent Gross							7.54	mg/L					mg/L	N
KY0053431	Herrington Haven Subdivision	Garrard	001-1	12/31/2018	Oxygen, dissolved [DO]	00300-1-0	Effluent Gross							7.75	mg/L					mg/L	N
KY0053431	Herrington Haven Subdivision	Garrard	001-1	09/30/2018	Oxygen, dissolved [DO]	00300-1-0	Effluent Gross							NODI V						mg/L	N
KY0053431	Herrington Haven Subdivision	Garrard	001-1	06/30/2018	Oxygen, dissolved [DO]	00300-1-0	Effluent Gross							NODI F						mg/L	N
KY0053431	Herrington Haven Subdivision	Garrard	001-1	03/31/2018	Oxygen, dissolved [DO]	00300-1-0	Effluent Gross							8.75	mg/L					mg/L	N
KY0053431	Herrington Haven Subdivision	Garrard	001-1	12/31/2021	BOD, 5-day, 20 deg. C	00310-1-0	Effluent Gross		1.75	lb/d			lb/d								N
KY0053431	Herrington Haven Subdivision	Garrard	001-1	12/31/2021	BOD, 5-day, 20 deg. C	00310-1-0	Effluent Gross				1.75	lb/d	lb/d								N
KY0053431	Herrington Haven Subdivision	Garrard	001-1	12/31/2021	BOD, 5-day, 20 deg. C	00310-1-0	Effluent Gross									2	mg/L			mg/L	N
KY0053431	Herrington Haven Subdivision	Garrard	001-1	12/31/2021	BOD, 5-day, 20 deg. C	00310-1-0	Effluent Gross											2	mg/L	mg/L	N
KY0053431	Herrington Haven Subdivision	Garrard	001-1	09/30/2021	BOD, 5-day, 20 deg. C	00310-1-0	Effluent Gross		.175	lb/d			lb/d								N
KY0053431	Herrington Haven Subdivision	Garrard	001-1	09/30/2021	BOD, 5-day, 20 deg. C	00310-1-0	Effluent Gross				.175	lb/d	lb/d								N
KY0053431	Herrington Haven Subdivision	Garrard	001-1	09/30/2021	BOD, 5-day, 20 deg. C	00310-1-0	Effluent Gross									7	mg/L			mg/L	N
KY0053431	Herrington Haven Subdivision	Garrard	001-1	09/30/2021	BOD, 5-day, 20 deg. C	00310-1-0	Effluent Gross											7	mg/L	mg/L	N
KY0053431	Herrington Haven Subdivision	Garrard	001-1	06/30/2021	BOD, 5-day, 20 deg. C	00310-1-0	Effluent Gross		1.057	lb/d			lb/d								N
KY0053431	Herrington Haven Subdivision	Garrard	001-1	06/30/2021	BOD, 5-day, 20 deg. C	00310-1-0	Effluent Gross				1.057	lb/d	lb/d								N
KY0053431	Herrington Haven Subdivision	Garrard	001-1	06/30/2021	BOD, 5-day, 20 deg. C	00310-1-0	Effluent Gross									< 4	mg/L			mg/L	N
KY0053431	Herrington Haven Subdivision	Garrard	001-1	06/30/2021	BOD, 5-day, 20 deg. C	00310-1-0	Effluent Gross											< 4	mg/L	mg/L	N
KY0053431	Herrington Haven Subdivision	Garrard	001-1	03/31/2021	BOD, 5-day, 20 deg. C	00310-1-0	Effluent Gross		.023	lb/d			lb/d								N
KY0053431	Herrington Haven Subdivision	Garrard	001-1	03/31/2021	BOD, 5-day, 20 deg. C	00310-1-0	Effluent Gross				.023	lb/d	lb/d								N
KY0053431	Herrington Haven Subdivision	Garrard	001-1	03/31/2021	BOD, 5-day, 20 deg. C	00310-1-0	Effluent Gross									< 4	mg/L			mg/L	N
KY0053431	Herrington Haven Subdivision	Garrard	001-1	03/31/2021	BOD, 5-day, 20 deg. C	00310-1-0	Effluent Gross											< 4	mg/L	mg/L	N
KY0053431	Herrington Haven Subdivision	Garrard	001-1	12/31/2020	BOD, 5-day, 20 deg. C	00310-1-0	Effluent Gross		.01	lb/d			lb/d								N
KY0053431	Herrington Haven Subdivision	Garrard	001-1	12/31/2020	BOD, 5-day, 20 deg. C	00310-1-0	Effluent Gross				.01	lb/d	lb/d								N
KY0053431	Herrington Haven Subdivision	Garrard	001-1	12/31/2020	BOD, 5-day, 20 deg. C	00310-1-0	Effluent Gross									6	mg/L			mg/L	N
KY0053431	Herrington Haven Subdivision	Garrard	001-1	12/31/2020	BOD, 5-day, 20 deg. C	00310-1-0	Effluent Gross											6	mg/L	mg/L	N
KY0053431	Herrington Haven Subdivision	Garrard	001-1	09/30/2020	BOD, 5-day, 20 deg. C	00310-1-0	Effluent Gross		.02	lb/d			lb/d								N
KY0053431	Herrington Haven Subdivision	Garrard	001-1	09/30/2020	BOD, 5-day, 20 deg. C	00310-1-0	Effluent Gross				.02	lb/d	lb/d								N
KY0053431	Herrington Haven Subdivision	Garrard	001-1	09/30/2020	BOD, 5-day, 20 deg. C	00310-1-0	Effluent Gross									5	mg/L			mg/L	N
KY0053431	Herrington Haven Subdivision	Garrard	001-1	09/30/2020	BOD, 5-day, 20 deg. C	00310-1-0	Effluent Gross											5	mg/L	mg/L	N
KY0053431	Herrington Haven Subdivision	Garrard	001-1	06/30/2020	BOD, 5-day, 20 deg. C	00310-1-0	Effluent Gross		.01	lb/d			lb/d								N
KY0053431	Herrington Haven Subdivision	Garrard	001-1	06/30/2020	BOD, 5-day, 20 deg. C	00310-1-0	Effluent Gross				.01	lb/d	lb/d								N
KY0053431	Herrington Haven Subdivision	Garrard	001-1	06/30/2020	BOD, 5-day, 20 deg. C	00310-1-0	Effluent Gross									< 3	mg/L			mg/L	N
KY0053431	Herrington Haven Subdivision	Garrard	001-1	06/30/2020	BOD, 5-day, 20 deg. C	00310-1-0	Effluent Gross											< 3	mg/L	mg/L	N
KY0053431	Herrington Haven Subdivision	Garrard	001-1	03/31/2020	BOD, 5-day, 20 deg. C	00310-1-0	Effluent Gross		.04	lb/d			lb/d								N
KY0053431	Herrington Haven Subdivision	Garrard	001-1	03/31/2020	BOD, 5-day, 20 deg. C	00310-1-0	Effluent Gross				.04	lb/d	lb/d								N
KY0053431	Herrington Haven Subdivision	Garrard	001-1	03/31/2020	BOD, 5-day, 20 deg. C	00310-1-0	Effluent Gross									19	mg/L			mg/L	N
KY0053431	Herrington Haven Subdivision	Garrard	001-1	03/31/2020	BOD, 5-day, 20 deg. C	00310-1-0	Effluent Gross											19	mg/L	mg/L	N
KY0053431	Herrington Haven Subdivision	Garrard	001-1	12/31/2019	BOD, 5-day, 20 deg. C	00310-1-0	Effluent Gross		NODI V		NODI V		lb/d								N
KY0053431	Herrington Haven Subdivision	Garrard	001-1	12/31/2019	BOD, 5-day, 20 deg. C	00310-1-0	Effluent Gross									NODI V		NODI V		mg/L	N
KY0053431	Herrington Haven Subdivision	Garrard	001-1	09/30/2019	BOD, 5-day, 20 deg. C	00310-1-0	Effluent Gross		.01	lb/d			lb/d								N
KY0053431	Herrington Haven Subdivision	Garrard	001-1	09/30/2019	BOD, 5-day, 20 deg. C	00310-1-0	Effluent Gross				.01	lb/d	lb/d								N
KY0053431	Herrington Haven Subdivision	Garrard	001-1	09/30/2019	BOD, 5-day, 20 deg. C	00310-1-0	Effluent Gross									3	mg/L			mg/L	N
KY0053431	Herrington Haven Subdivision	Garrard	001-1	09/30/2019	BOD, 5-day, 20 deg. C	00310-1-0	Effluent Gross											3	mg/L	mg/L	N
KY0053431	Herrington Haven Subdivision	Garrard	001-1	06/30/2019	BOD, 5-day, 20 deg. C	00310-1-0	Effluent Gross		.1	lb/d			lb/d								N
KY0053431	Herrington Haven Subdivision	Garrard	001-1	06/30/2019	BOD, 5-day, 20 deg. C	00310-1-0	Effluent Gross				.1	lb/d	lb/d								N
KY0053431	Herrington Haven Subdivision	Garrard	001-1	06/30/2019	BOD, 5-day, 20 deg. C	00310-1-0	Effluent Gross									11	mg/L			mg/L	N
KY0053431	Herrington Haven Subdivision	Garrard	001-1	06/30/2019	BOD, 5-day, 20 deg. C	00310-1-0	Effluent Gross											11	mg/L	mg/L	N
KY0053431	Herrington Haven Subdivision	Garrard	001-1	03/31/2019	BOD, 5-day, 20 deg. C	00310-1-0	Effluent Gross		.03	lb/d			lb/d								N
KY0053431	Herrington Haven Subdivision	Garrard	001-1	03/31/2019	BOD, 5-day, 20 deg. C	00310-1-0	Effluent Gross				.03	lb/d	lb/d								N
KY0053431	Herrington Haven Subdivision	Garrard	001-1	03/31/2019	BOD, 5-day, 20 deg. C	00310-1-0	Effluent Gross									19	mg/L			mg/L	N
KY0053431	Herrington Haven Subdivision	Garrard	001-1	03/31/2019	BOD, 5-day, 20 deg. C	00310-1-0	Effluent Gross											19	mg/L	mg/L	N
KY0053431	Herrington Haven Subdivision	Garrard	001-1	12/31/2018	BOD, 5-day, 20 deg. C	00310-1-0	Effluent Gross		.04	lb/d			lb/d								N
KY0053431	Herrington Haven Subdivision	Garrard	001-1	12/31/2018	BOD, 5-day, 20 deg. C	00310-1-0	Effluent Gross				.04	lb/d	lb/d								N
KY0053431	Herrington Haven Subdivision	Garrard	001-1	12/31/2018	BOD, 5-day, 20 deg. C	00310-1-0	Effluent Gross									9	mg/L			mg/L	N
KY0053431	Herrington Haven Subdivision	Garrard	001-1	12/31/2018	BOD, 5-day, 20 deg. C	00310-1-0	Effluent Gross											9	mg/L	mg/L	N
KY0053431	Herrington Haven Subdivision	Garrard	001-1	09/30/2018	BOD, 5-day, 20 deg. C	00310-1-0	Effluent Gross		NODI V		NODI V		lb/d								N
KY0053431	Herrington Haven Subdivision	Garrard	001-1	09/30/2018	BOD, 5-day, 20 deg. C	00310-1-0	Effluent Gross									NODI V		NODI V		mg/L	N
KY0053431	Herrington Haven Subdivision	Garrard	001-1	06/30/2018	BOD, 5-day, 20 deg. C	00310-1-0	Effluent Gross		NODI F		NODI F		lb/d								N
KY0053431	Herrington Haven Subdivision	Garrard	001-1	06/30/2018	BOD, 5-day, 20 deg. C	00310-1-0	Effluent Gross									NODI F		NODI F		mg/L	N
KY0053431	Herrington Haven Subdivision	Garrard	001-1	03/31/2018	BOD, 5-day, 20 deg. C	00310-1-0	Effluent Gross		.1	lb/d			lb/d								N
KY0053431	Herrington Haven Subdivision	Garrard	001-1	03/31/2018	BOD, 5-day, 20 deg. C	00310-1-0	Effluent Gross				.1	lb/d	lb/d								N
KY0053431	Herrington Haven Subdivision	Garrard	001-1	03/31/2018	BOD, 5-day, 20 deg. C	00310-1-0	Effluent Gross									13	mg/L			mg/L	N
KY0053431	Herrington Haven Subdivision	Garrard	001-1	03/31/2018	BOD, 5-day, 20 deg. C	00310-1-0	Effluent Gross											13	mg/L	mg/L	N
KY0053431	Herrington Haven Subdivision	Garrard	001-1	12/31/2021	pH	00400-1-0	Effluent Gross							7.24	SU					SU	N
KY0053431	Herrington Haven Subdivision	Garrard	001-1	12/31/2021	pH	00400-1-0	Effluent Gross											7.24	SU	SU	N
KY0053431	Herrington Haven Subdivision	Garrard	001-1	09/30/2021	pH	00400-1-0	Effluent Gross							7.45	SU					SU	N
KY0053431	Herrington Haven Subdivision	Garrard	001-1	09/30/2021	pH	00400-1-0	Effluent Gross											7.45	SU	SU	N
KY0053431	Herrington Haven Subdivision	Garrard	001-1	06/30/2021	pH	00400-1-0	Effluent Gross							7.62	SU					SU	N
KY0053431	Herrington Haven Subdivision	Garrard	001-1	06/30/2021	pH	00400-1-0	Effluent Gross											7.62	SU	SU	N
KY0053431	Herrington Haven Subdivision	Garrard	001-1	03/31/2021	pH	00400-1-0	Effluent Gross							8.77	SU					SU	N
KY0053431	Herrington Haven Subdivision	Garrard	001-1	03/31/2021	pH	00400-1-0	Effluent Gross											8.77	SU	SU	N
KY0053431	Herrington Haven Subdivision	Garrard	001-1	12/31/2020	pH	00400-1-0	Effluent Gross							7.61	SU					SU	N
KY0053431	Herrington Haven Subdivision	Garrard	001-1	12/31/2020	pH	00400-1-0	Effluent Gross											7.61	SU	SU	N
KY0053431	Herrington Haven Subdivision	Garrard	001-1	09/30/2020	pH	00400-1-0	Effluent Gross							7.31	SU					SU	N
KY0053431	Herrington Haven Subdivision	Garrard	001-1	09/30/2020	pH	00400-1-0	Effluent Gross											7.31	SU	SU	N

KY0053431	Herrington Haven Subdivision	Garrard	001-1	06/30/2020	pH	00400-1-0	Effluent Gross							7.4	SU					SU	N
KY0053431	Herrington Haven Subdivision	Garrard	001-1	06/30/2020	pH	00400-1-0	Effluent Gross											7.4	SU	SU	N
KY0053431	Herrington Haven Subdivision	Garrard	001-1	03/31/2020	pH	00400-1-0	Effluent Gross							6.6	SU					SU	N
KY0053431	Herrington Haven Subdivision	Garrard	001-1	03/31/2020	pH	00400-1-0	Effluent Gross											6.6	SU	SU	N
KY0053431	Herrington Haven Subdivision	Garrard	001-1	12/31/2019	pH	00400-1-0	Effluent Gross							NODI V				NODI V		SU	N
KY0053431	Herrington Haven Subdivision	Garrard	001-1	09/30/2019	pH	00400-1-0	Effluent Gross							7.68	SU					SU	N
KY0053431	Herrington Haven Subdivision	Garrard	001-1	09/30/2019	pH	00400-1-0	Effluent Gross											7.68	SU	SU	N
KY0053431	Herrington Haven Subdivision	Garrard	001-1	06/30/2019	pH	00400-1-0	Effluent Gross							7.75	SU					SU	N
KY0053431	Herrington Haven Subdivision	Garrard	001-1	06/30/2019	pH	00400-1-0	Effluent Gross											7.75	SU	SU	N
KY0053431	Herrington Haven Subdivision	Garrard	001-1	03/31/2019	pH	00400-1-0	Effluent Gross							8.27	SU					SU	N
KY0053431	Herrington Haven Subdivision	Garrard	001-1	03/31/2019	pH	00400-1-0	Effluent Gross											8.27	SU	SU	N
KY0053431	Herrington Haven Subdivision	Garrard	001-1	12/31/2018	pH	00400-1-0	Effluent Gross							7.67	SU					SU	N
KY0053431	Herrington Haven Subdivision	Garrard	001-1	12/31/2018	pH	00400-1-0	Effluent Gross											7.67	SU	SU	N
KY0053431	Herrington Haven Subdivision	Garrard	001-1	09/30/2018	pH	00400-1-0	Effluent Gross							NODI V				NODI V		SU	N
KY0053431	Herrington Haven Subdivision	Garrard	001-1	06/30/2018	pH	00400-1-0	Effluent Gross							NODI F				NODI F		SU	N
KY0053431	Herrington Haven Subdivision	Garrard	001-1	03/31/2018	pH	00400-1-0	Effluent Gross							6.85	SU					SU	N
KY0053431	Herrington Haven Subdivision	Garrard	001-1	03/31/2018	pH	00400-1-0	Effluent Gross											6.85	SU	SU	N
KY0053431	Herrington Haven Subdivision	Garrard	001-1	12/31/2021	Solids, total suspended	00530-1-0	Effluent Gross	114	5.25	lb/d			lb/d								Y
KY0053431	Herrington Haven Subdivision	Garrard	001-1	12/31/2021	Solids, total suspended	00530-1-0	Effluent Gross	43			5.25	lb/d	lb/d								Y
KY0053431	Herrington Haven Subdivision	Garrard	001-1	12/31/2021	Solids, total suspended	00530-1-0	Effluent Gross									6	mg/L			mg/L	N
KY0053431	Herrington Haven Subdivision	Garrard	001-1	12/31/2021	Solids, total suspended	00530-1-0	Effluent Gross											6	mg/L	mg/L	N
KY0053431	Herrington Haven Subdivision	Garrard	001-1	09/30/2021	Solids, total suspended	00530-1-0	Effluent Gross	317	10.22	lb/d			lb/d								Y
KY0053431	Herrington Haven Subdivision	Garrard	001-1	09/30/2021	Solids, total suspended	00530-1-0	Effluent Gross	178			10.22	lb/d	lb/d								Y
KY0053431	Herrington Haven Subdivision	Garrard	001-1	09/30/2021	Solids, total suspended	00530-1-0	Effluent Gross									7	mg/L			mg/L	N
KY0053431	Herrington Haven Subdivision	Garrard	001-1	09/30/2021	Solids, total suspended	00530-1-0	Effluent Gross											7	mg/L	mg/L	N
KY0053431	Herrington Haven Subdivision	Garrard	001-1	06/30/2021	Solids, total suspended	00530-1-0	Effluent Gross	2058	52.88	lb/d			lb/d								Y
KY0053431	Herrington Haven Subdivision	Garrard	001-1	06/30/2021	Solids, total suspended	00530-1-0	Effluent Gross	1337			52.88	lb/d	lb/d								Y
KY0053431	Herrington Haven Subdivision	Garrard	001-1	06/30/2021	Solids, total suspended	00530-1-0	Effluent Gross									< 6	mg/L			mg/L	N
KY0053431	Herrington Haven Subdivision	Garrard	001-1	06/30/2021	Solids, total suspended	00530-1-0	Effluent Gross											< 6	mg/L	mg/L	N
KY0053431	Herrington Haven Subdivision	Garrard	001-1	03/31/2021	Solids, total suspended	00530-1-0	Effluent Gross		1.169	lb/d			lb/d								N
KY0053431	Herrington Haven Subdivision	Garrard	001-1	03/31/2021	Solids, total suspended	00530-1-0	Effluent Gross				1.169	lb/d	lb/d								N
KY0053431	Herrington Haven Subdivision	Garrard	001-1	03/31/2021	Solids, total suspended	00530-1-0	Effluent Gross									< 6	mg/L			mg/L	N
KY0053431	Herrington Haven Subdivision	Garrard	001-1	03/31/2021	Solids, total suspended	00530-1-0	Effluent Gross											< 6	mg/L	mg/L	N
KY0053431	Herrington Haven Subdivision	Garrard	001-1	12/31/2020	Solids, total suspended	00530-1-0	Effluent Gross		.01	lb/d			lb/d								N
KY0053431	Herrington Haven Subdivision	Garrard	001-1	12/31/2020	Solids, total suspended	00530-1-0	Effluent Gross				.01	lb/d	lb/d								N
KY0053431	Herrington Haven Subdivision	Garrard	001-1	12/31/2020	Solids, total suspended	00530-1-0	Effluent Gross									6	mg/L			mg/L	N
KY0053431	Herrington Haven Subdivision	Garrard	001-1	12/31/2020	Solids, total suspended	00530-1-0	Effluent Gross											6	mg/L	mg/L	N
KY0053431	Herrington Haven Subdivision	Garrard	001-1	09/30/2020	Solids, total suspended	00530-1-0	Effluent Gross		.01	lb/d			lb/d								N
KY0053431	Herrington Haven Subdivision	Garrard	001-1	09/30/2020	Solids, total suspended	00530-1-0	Effluent Gross				.01	lb/d	lb/d								N
KY0053431	Herrington Haven Subdivision	Garrard	001-1	09/30/2020	Solids, total suspended	00530-1-0	Effluent Gross									< 2	mg/L			mg/L	N
KY0053431	Herrington Haven Subdivision	Garrard	001-1	09/30/2020	Solids, total suspended	00530-1-0	Effluent Gross											< 2	mg/L	mg/L	N
KY0053431	Herrington Haven Subdivision	Garrard	001-1	06/30/2020	Solids, total suspended	00530-1-0	Effluent Gross		.004	lb/d			lb/d								N
KY0053431	Herrington Haven Subdivision	Garrard	001-1	06/30/2020	Solids, total suspended	00530-1-0	Effluent Gross				.004	lb/d	lb/d								N
KY0053431	Herrington Haven Subdivision	Garrard	001-1	06/30/2020	Solids, total suspended	00530-1-0	Effluent Gross									< 2	mg/L			mg/L	N
KY0053431	Herrington Haven Subdivision	Garrard	001-1	06/30/2020	Solids, total suspended	00530-1-0	Effluent Gross											< 2	mg/L	mg/L	N
KY0053431	Herrington Haven Subdivision	Garrard	001-1	03/31/2020	Solids, total suspended	00530-1-0	Effluent Gross		.13	lb/d			lb/d								N
KY0053431	Herrington Haven Subdivision	Garrard	001-1	03/31/2020	Solids, total suspended	00530-1-0	Effluent Gross				.13	lb/d	lb/d								N
KY0053431	Herrington Haven Subdivision	Garrard	001-1	03/31/2020	Solids, total suspended	00530-1-0	Effluent Gross									6	mg/L			mg/L	N
KY0053431	Herrington Haven Subdivision	Garrard	001-1	03/31/2020	Solids, total suspended	00530-1-0	Effluent Gross											6	mg/L	mg/L	N
KY0053431	Herrington Haven Subdivision	Garrard	001-1	12/31/2019	Solids, total suspended	00530-1-0	Effluent Gross		NODI V		NODI V		lb/d								N
KY0053431	Herrington Haven Subdivision	Garrard	001-1	12/31/2019	Solids, total suspended	00530-1-0	Effluent Gross									NODI V		NODI V		mg/L	N
KY0053431	Herrington Haven Subdivision	Garrard	001-1	09/30/2019	Solids, total suspended	00530-1-0	Effluent Gross		.01	lb/d			lb/d								N
KY0053431	Herrington Haven Subdivision	Garrard	001-1	09/30/2019	Solids, total suspended	00530-1-0	Effluent Gross				.01	lb/d	lb/d								N
KY0053431	Herrington Haven Subdivision	Garrard	001-1	09/30/2019	Solids, total suspended	00530-1-0	Effluent Gross									2	mg/L			mg/L	N
KY0053431	Herrington Haven Subdivision	Garrard	001-1	09/30/2019	Solids, total suspended	00530-1-0	Effluent Gross											2	mg/L	mg/L	N
KY0053431	Herrington Haven Subdivision	Garrard	001-1	06/30/2019	Solids, total suspended	00530-1-0	Effluent Gross		.02	lb/d			lb/d								N
KY0053431	Herrington Haven Subdivision	Garrard	001-1	06/30/2019	Solids, total suspended	00530-1-0	Effluent Gross				.02	lb/d	lb/d								N
KY0053431	Herrington Haven Subdivision	Garrard	001-1	06/30/2019	Solids, total suspended	00530-1-0	Effluent Gross									2	mg/L			mg/L	N
KY0053431	Herrington Haven Subdivision	Garrard	001-1	06/30/2019	Solids, total suspended	00530-1-0	Effluent Gross											2	mg/L	mg/L	N
KY0053431	Herrington Haven Subdivision	Garrard	001-1	03/31/2019	Solids, total suspended	00530-1-0	Effluent Gross		.04	lb/d			lb/d								N
KY0053431	Herrington Haven Subdivision	Garrard	001-1	03/31/2019	Solids, total suspended	00530-1-0	Effluent Gross				.04	lb/d	lb/d								N
KY0053431	Herrington Haven Subdivision	Garrard	001-1	03/31/2019	Solids, total suspended	00530-1-0	Effluent Gross									24	mg/L			mg/L	N
KY0053431	Herrington Haven Subdivision	Garrard	001-1	03/31/2019	Solids, total suspended	00530-1-0	Effluent Gross											24	mg/L	mg/L	N
KY0053431	Herrington Haven Subdivision	Garrard	001-1	12/31/2018	Solids, total suspended	00530-1-0	Effluent Gross		.01	lb/d			lb/d								N
KY0053431	Herrington Haven Subdivision	Garrard	001-1	12/31/2018	Solids, total suspended	00530-1-0	Effluent Gross				.01	lb/d	lb/d								N
KY0053431	Herrington Haven Subdivision	Garrard	001-1	12/31/2018	Solids, total suspended	00530-1-0	Effluent Gross									< 2	mg/L			mg/L	N
KY0053431	Herrington Haven Subdivision	Garrard	001-1	12/31/2018	Solids, total suspended	00530-1-0	Effluent Gross											< 2	mg/L	mg/L	N
KY0053431	Herrington Haven Subdivision	Garrard	001-1	09/30/2018	Solids, total suspended	00530-1-0	Effluent Gross		NODI V		NODI V		lb/d								N
KY0053431	Herrington Haven Subdivision	Garrard	001-1	09/30/2018	Solids, total suspended	00530-1-0	Effluent Gross									NODI V		NODI V		mg/L	N
KY0053431	Herrington Haven Subdivision	Garrard	001-1	06/30/2018	Solids, total suspended	00530-1-0	Effluent Gross		NODI F		NODI F		lb/d								N
KY0053431	Herrington Haven Subdivision	Garrard	001-1	06/30/2018	Solids, total suspended	00530-1-0	Effluent Gross									NODI F		NODI F		mg/L	N
KY0053431	Herrington Haven Subdivision	Garrard	001-1	03/31/2018	Solids, total suspended	00530-1-0	Effluent Gross		.04	lb/d			lb/d								N
KY0053431	Herrington Haven Subdivision	Garrard	001-1	03/31/2018	Solids, total suspended	00530-1-0	Effluent Gross				.04	lb/d	lb/d								N
KY0053431	Herrington Haven Subdivision	Garrard	001-1	03/31/2018	Solids, total suspended	00530-1-0	Effluent Gross									10	mg/L			mg/L	N
KY0053431	Herrington Haven Subdivision	Garrard	001-1	03/31/2018	Solids, total suspended	00530-1-0	Effluent Gross											10	mg/L	mg/L	N
KY0053431	Herrington Haven Subdivision	Garrard	001-1	12/31/2021	Nitrogen, total [as N]	00600-1-0	Effluent Gross									33.2	mg/L			mg/L	N
KY0053431	Herrington Haven Subdivision	Garrard	001-1	12/31/2021	Nitrogen, total [as N]	00600-1-0	Effluent Gross											33.2	mg/L	mg/L	N
KY0053431	Herrington Haven Subdivision	Garrard	001-1	09/30/2021	Nitrogen, total [as N]	00600-1-0	Effluent Gross									21.4	mg/L			mg/L	N
KY0053431	Herrington Haven Subdivision	Garrard	001-1	09/30/2021	Nitrogen, total [as N]	00600-1-0	Effluent Gross											21.4	mg/L	mg/L	N
KY0053431	Herrington Haven Subdivision	Garrard	001-1	06/30/2021	Nitrogen, total [as N]	00600-1-0	Effluent Gross									9.8	mg/L			mg/L	N
KY0053431	Herrington Haven Subdivision	Garrard	001-1	06/30/2021	Nitrogen, total [as N]	00600-1-0	Effluent Gross											9.8	mg/L	mg/L	N
KY0053431	Herrington Haven Subdivision	Garrard	001-1	03/31/2021	Nitrogen, total [as N]	00600-1-0	Effluent Gross									22.8	mg/L			mg/L	N
KY0053431	Herrington Haven Subdivision	Garrard	001-1	03/31/2021	Nitrogen, total [as N]	00600-1-0	Effluent Gross											22.8	mg/L	mg/L	N
KY0053431	Herrington Haven Subdivision	Garrard	001-1	12/31/2020	Nitrogen, total [as N]	00600-1-0	Effluent Gross									5	mg/L			mg/L	N
KY0053431	Herrington Haven Subdivision	Garrard	001-1	12/31/2020	Nitrogen, total [as N]	00600-1-0	Effluent Gross											5	mg/L	mg/L	N
KY0053431	Herrington Haven Subdivision	Garrard	001-1	09/30/2020	Nitrogen, total [as N]	00600-1-0	Effluent Gross									4	mg/L			mg/L	N
KY0053431	Herrington Haven Subdivision	Garrard	001-1	09/30/2020	Nitrogen, total [as N]	00600-1-0	Effluent Gross											4	mg/L	mg/L	N
KY0053431	Herrington Haven Subdivision	Garrard	001-1	06/30/2020	Nitrogen, total [as N]	00600-1-0	Effluent Gross									6	mg/L			mg/L	N
KY0053431	Herrington Haven Subdivision	Garrard	001-1	06/30/2020	Nitrogen, total [as N]	00600-1-0	Effluent Gross											6	mg/L	mg/L	N
KY0053431	Herrington Haven Subdivision	Garrard	001-1	03/31/2020	Nitrogen, total [as N]	00600-1-0	Effluent Gross									4	mg/L			mg/L	N

KY0053431	Herrington Haven Subdivision	Garrard	001-1	03/31/2020	Nitrogen, total [as N]	00600-1-0	Effluent Gross											4	mg/L	mg/L	N
KY0053431	Herrington Haven Subdivision	Garrard	001-1	12/31/2019	Nitrogen, total [as N]	00600-1-0	Effluent Gross									NODI V		NODI V		mg/L	N
KY0053431	Herrington Haven Subdivision	Garrard	001-1	09/30/2019	Nitrogen, total [as N]	00600-1-0	Effluent Gross									17	mg/L			mg/L	N
KY0053431	Herrington Haven Subdivision	Garrard	001-1	09/30/2019	Nitrogen, total [as N]	00600-1-0	Effluent Gross											17	mg/L	mg/L	N
KY0053431	Herrington Haven Subdivision	Garrard	001-1	06/30/2019	Nitrogen, total [as N]	00600-1-0	Effluent Gross									5	mg/L			mg/L	N
KY0053431	Herrington Haven Subdivision	Garrard	001-1	06/30/2019	Nitrogen, total [as N]	00600-1-0	Effluent Gross											5	mg/L	mg/L	N
KY0053431	Herrington Haven Subdivision	Garrard	001-1	03/31/2019	Nitrogen, total [as N]	00600-1-0	Effluent Gross									26	mg/L			mg/L	N
KY0053431	Herrington Haven Subdivision	Garrard	001-1	03/31/2019	Nitrogen, total [as N]	00600-1-0	Effluent Gross											26	mg/L	mg/L	N
KY0053431	Herrington Haven Subdivision	Garrard	001-1	12/31/2018	Nitrogen, total [as N]	00600-1-0	Effluent Gross									5	mg/L			mg/L	N
KY0053431	Herrington Haven Subdivision	Garrard	001-1	12/31/2018	Nitrogen, total [as N]	00600-1-0	Effluent Gross											5	mg/L	mg/L	N
KY0053431	Herrington Haven Subdivision	Garrard	001-1	09/30/2018	Nitrogen, total [as N]	00600-1-0	Effluent Gross									NODI V		NODI V		mg/L	N
KY0053431	Herrington Haven Subdivision	Garrard	001-1	06/30/2018	Nitrogen, total [as N]	00600-1-0	Effluent Gross									NODI F		NODI F		mg/L	N
KY0053431	Herrington Haven Subdivision	Garrard	001-1	03/31/2018	Nitrogen, total [as N]	00600-1-0	Effluent Gross									17	mg/L			mg/L	N
KY0053431	Herrington Haven Subdivision	Garrard	001-1	03/31/2018	Nitrogen, total [as N]	00600-1-0	Effluent Gross											17	mg/L	mg/L	N
KY0053431	Herrington Haven Subdivision	Garrard	001-1	12/31/2021	Nitrogen, ammonia total [as	00610-1-0	Effluent Gross		.13	lb/d			lb/d								N
KY0053431	Herrington Haven Subdivision	Garrard	001-1	12/31/2021	Nitrogen, ammonia total [as	00610-1-0	Effluent Gross				.13	lb/d	lb/d								N
KY0053431	Herrington Haven Subdivision	Garrard	001-1	12/31/2021	Nitrogen, ammonia total [as	00610-1-0	Effluent Gross									.15	mg/L			mg/L	N
KY0053431	Herrington Haven Subdivision	Garrard	001-1	12/31/2021	Nitrogen, ammonia total [as	00610-1-0	Effluent Gross											.15	mg/L	mg/L	N
KY0053431	Herrington Haven Subdivision	Garrard	001-1	09/30/2021	Nitrogen, ammonia total [as	00610-1-0	Effluent Gross	946	17.05	lb/d			lb/d								Y
KY0053431	Herrington Haven Subdivision	Garrard	001-1	09/30/2021	Nitrogen, ammonia total [as	00610-1-0	Effluent Gross	596			17.05	lb/d	lb/d								Y
KY0053431	Herrington Haven Subdivision	Garrard	001-1	09/30/2021	Nitrogen, ammonia total [as	00610-1-0	Effluent Gross									< .2	mg/L			mg/L	N
KY0053431	Herrington Haven Subdivision	Garrard	001-1	09/30/2021	Nitrogen, ammonia total [as	00610-1-0	Effluent Gross											< .2	mg/L	mg/L	N
KY0053431	Herrington Haven Subdivision	Garrard	001-1	06/30/2021	Nitrogen, ammonia total [as	00610-1-0	Effluent Gross	5312	88.21	lb/d			lb/d								Y
KY0053431	Herrington Haven Subdivision	Garrard	001-1	06/30/2021	Nitrogen, ammonia total [as	00610-1-0	Effluent Gross	3500			88.21	lb/d	lb/d								Y
KY0053431	Herrington Haven Subdivision	Garrard	001-1	06/30/2021	Nitrogen, ammonia total [as	00610-1-0	Effluent Gross									< .2	mg/L			mg/L	N
KY0053431	Herrington Haven Subdivision	Garrard	001-1	06/30/2021	Nitrogen, ammonia total [as	00610-1-0	Effluent Gross											< .2	mg/L	mg/L	N
KY0053431	Herrington Haven Subdivision	Garrard	001-1	03/31/2021	Nitrogen, ammonia total [as	00610-1-0	Effluent Gross	20	1.949	lb/d			lb/d								Y
KY0053431	Herrington Haven Subdivision	Garrard	001-1	03/31/2021	Nitrogen, ammonia total [as	00610-1-0	Effluent Gross				1.949	lb/d	lb/d								N
KY0053431	Herrington Haven Subdivision	Garrard	001-1	03/31/2021	Nitrogen, ammonia total [as	00610-1-0	Effluent Gross									< .2	mg/L			mg/L	N
KY0053431	Herrington Haven Subdivision	Garrard	001-1	03/31/2021	Nitrogen, ammonia total [as	00610-1-0	Effluent Gross											< .2	mg/L	mg/L	N
KY0053431	Herrington Haven Subdivision	Garrard	001-1	12/31/2020	Nitrogen, ammonia total [as	00610-1-0	Effluent Gross		.0001	lb/d			lb/d								N
KY0053431	Herrington Haven Subdivision	Garrard	001-1	12/31/2020	Nitrogen, ammonia total [as	00610-1-0	Effluent Gross				.0001	lb/d	lb/d								N
KY0053431	Herrington Haven Subdivision	Garrard	001-1	12/31/2020	Nitrogen, ammonia total [as	00610-1-0	Effluent Gross									< .05	mg/L			mg/L	N
KY0053431	Herrington Haven Subdivision	Garrard	001-1	12/31/2020	Nitrogen, ammonia total [as	00610-1-0	Effluent Gross											< .05	mg/L	mg/L	N
KY0053431	Herrington Haven Subdivision	Garrard	001-1	09/30/2020	Nitrogen, ammonia total [as	00610-1-0	Effluent Gross		.0005	lb/d			lb/d								N
KY0053431	Herrington Haven Subdivision	Garrard	001-1	09/30/2020	Nitrogen, ammonia total [as	00610-1-0	Effluent Gross				.0005	lb/d	lb/d								N
KY0053431	Herrington Haven Subdivision	Garrard	001-1	09/30/2020	Nitrogen, ammonia total [as	00610-1-0	Effluent Gross									.13	mg/L			mg/L	N
KY0053431	Herrington Haven Subdivision	Garrard	001-1	09/30/2020	Nitrogen, ammonia total [as	00610-1-0	Effluent Gross											.13	mg/L	mg/L	N
KY0053431	Herrington Haven Subdivision	Garrard	001-1	06/30/2020	Nitrogen, ammonia total [as	00610-1-0	Effluent Gross		.01	lb/d			lb/d								N
KY0053431	Herrington Haven Subdivision	Garrard	001-1	06/30/2020	Nitrogen, ammonia total [as	00610-1-0	Effluent Gross				.01	lb/d	lb/d								N
KY0053431	Herrington Haven Subdivision	Garrard	001-1	06/30/2020	Nitrogen, ammonia total [as	00610-1-0	Effluent Gross									3	mg/L			mg/L	N
KY0053431	Herrington Haven Subdivision	Garrard	001-1	06/30/2020	Nitrogen, ammonia total [as	00610-1-0	Effluent Gross											3	mg/L	mg/L	N
KY0053431	Herrington Haven Subdivision	Garrard	001-1	03/31/2020	Nitrogen, ammonia total [as	00610-1-0	Effluent Gross		.003	lb/d			lb/d								N
KY0053431	Herrington Haven Subdivision	Garrard	001-1	03/31/2020	Nitrogen, ammonia total [as	00610-1-0	Effluent Gross				.003	lb/d	lb/d								N
KY0053431	Herrington Haven Subdivision	Garrard	001-1	03/31/2020	Nitrogen, ammonia total [as	00610-1-0	Effluent Gross									.16	mg/L			mg/L	N
KY0053431	Herrington Haven Subdivision	Garrard	001-1	12/31/2019	Nitrogen, ammonia total [as	00610-1-0	Effluent Gross		NODI V		NODI V		lb/d					.16	mg/L	mg/L	N
KY0053431	Herrington Haven Subdivision	Garrard	001-1	12/31/2019	Nitrogen, ammonia total [as	00610-1-0	Effluent Gross									NODI V		NODI V		mg/L	N
KY0053431	Herrington Haven Subdivision	Garrard	001-1	09/30/2019	Nitrogen, ammonia total [as	00610-1-0	Effluent Gross		.0002	lb/d			lb/d								N
KY0053431	Herrington Haven Subdivision	Garrard	001-1	09/30/2019	Nitrogen, ammonia total [as	00610-1-0	Effluent Gross				.0002	lb/d	lb/d								N
KY0053431	Herrington Haven Subdivision	Garrard	001-1	09/30/2019	Nitrogen, ammonia total [as	00610-1-0	Effluent Gross									.05	mg/L			mg/L	N
KY0053431	Herrington Haven Subdivision	Garrard	001-1	09/30/2019	Nitrogen, ammonia total [as	00610-1-0	Effluent Gross											.05	mg/L	mg/L	N
KY0053431	Herrington Haven Subdivision	Garrard	001-1	06/30/2019	Nitrogen, ammonia total [as	00610-1-0	Effluent Gross		.001	lb/d			lb/d								N
KY0053431	Herrington Haven Subdivision	Garrard	001-1	06/30/2019	Nitrogen, ammonia total [as	00610-1-0	Effluent Gross				.001	lb/d	lb/d								N
KY0053431	Herrington Haven Subdivision	Garrard	001-1	06/30/2019	Nitrogen, ammonia total [as	00610-1-0	Effluent Gross									.11	mg/L			mg/L	N
KY0053431	Herrington Haven Subdivision	Garrard	001-1	06/30/2019	Nitrogen, ammonia total [as	00610-1-0	Effluent Gross											.11	mg/L	mg/L	N
KY0053431	Herrington Haven Subdivision	Garrard	001-1	03/31/2019	Nitrogen, ammonia total [as	00610-1-0	Effluent Gross		.0001	lb/d			lb/d								N
KY0053431	Herrington Haven Subdivision	Garrard	001-1	03/31/2019	Nitrogen, ammonia total [as	00610-1-0	Effluent Gross				.0001	lb/d	lb/d								N
KY0053431	Herrington Haven Subdivision	Garrard	001-1	03/31/2019	Nitrogen, ammonia total [as	00610-1-0	Effluent Gross									< .05	mg/L			mg/L	N
KY0053431	Herrington Haven Subdivision	Garrard	001-1	03/31/2019	Nitrogen, ammonia total [as	00610-1-0	Effluent Gross											< .05	mg/L	mg/L	N
KY0053431	Herrington Haven Subdivision	Garrard	001-1	12/31/2018	Nitrogen, ammonia total [as	00610-1-0	Effluent Gross		.0002	lb/d			lb/d								N
KY0053431	Herrington Haven Subdivision	Garrard	001-1	12/31/2018	Nitrogen, ammonia total [as	00610-1-0	Effluent Gross				.0002	lb/d	lb/d								N
KY0053431	Herrington Haven Subdivision	Garrard	001-1	12/31/2018	Nitrogen, ammonia total [as	00610-1-0	Effluent Gross									< .05	mg/L			mg/L	N
KY0053431	Herrington Haven Subdivision	Garrard	001-1	12/31/2018	Nitrogen, ammonia total [as	00610-1-0	Effluent Gross											< .05	mg/L	mg/L	N
KY0053431	Herrington Haven Subdivision	Garrard	001-1	09/30/2018	Nitrogen, ammonia total [as	00610-1-0	Effluent Gross		NODI V		NODI V		lb/d								N
KY0053431	Herrington Haven Subdivision	Garrard	001-1	09/30/2018	Nitrogen, ammonia total [as	00610-1-0	Effluent Gross									NODI V		NODI V		mg/L	N
KY0053431	Herrington Haven Subdivision	Garrard	001-1	06/30/2018	Nitrogen, ammonia total [as	00610-1-0	Effluent Gross		NODI F		NODI F		lb/d								N
KY0053431	Herrington Haven Subdivision	Garrard	001-1	06/30/2018	Nitrogen, ammonia total [as	00610-1-0	Effluent Gross									NODI F		NODI F		mg/L	N
KY0053431	Herrington Haven Subdivision	Garrard	001-1	03/31/2018	Nitrogen, ammonia total [as	00610-1-0	Effluent Gross		.0003	lb/d			lb/d								N
KY0053431	Herrington Haven Subdivision	Garrard	001-1	03/31/2018	Nitrogen, ammonia total [as	00610-1-0	Effluent Gross				.0003	lb/d	lb/d								N
KY0053431	Herrington Haven Subdivision	Garrard	001-1	03/31/2018	Nitrogen, ammonia total [as	00610-1-0	Effluent Gross									.08	mg/L			mg/L	N
KY0053431	Herrington Haven Subdivision	Garrard	001-1	03/31/2018	Nitrogen, ammonia total [as	00610-1-0	Effluent Gross											.08	mg/L	mg/L	N
KY0053431	Herrington Haven Subdivision	Garrard	001-1	12/31/2021	Phosphorus, total [as P]	00665-1-0	Effluent Gross	50								1.5	mg/L			mg/L	Y
KY0053431	Herrington Haven Subdivision	Garrard	001-1	12/31/2021	Phosphorus, total [as P]	00665-1-0	Effluent Gross											1.5	mg/L	mg/L	N
KY0053431	Herrington Haven Subdivision	Garrard	001-1	09/30/2021	Phosphorus, total [as P]	00665-1-0	Effluent Gross	830								9.3	mg/L			mg/L	Y
KY0053431	Herrington Haven Subdivision	Garrard	001-1	09/30/2021	Phosphorus, total [as P]	00665-1-0	Effluent Gross											9.3	mg/L	mg/L	N
KY0053431	Herrington Haven Subdivision	Garrard	001-1	06/30/2021	Phosphorus, total [as P]	00665-1-0	Effluent Gross	520								6.2	mg/L			mg/L	Y
KY0053431	Herrington Haven Subdivision	Garrard	001-1	06/30/2021	Phosphorus, total [as P]	00665-1-0	Effluent Gross											6.2	mg/L	mg/L	N
KY0053431	Herrington Haven Subdivision	Garrard	001-1	03/31/2021	Phosphorus, total [as P]	00665-1-0	Effluent Gross	680								7.8	mg/L			mg/L	Y
KY0053431	Herrington Haven Subdivision	Garrard	001-1	03/31/2021	Phosphorus, total [as P]	00665-1-0	Effluent Gross											7.8	mg/L	mg/L	N
KY0053431	Herrington Haven Subdivision	Garrard	001-1	12/31/2020	Phosphorus, total [as P]	00665-1-0	Effluent Gross	347								4.47	mg/L			mg/L	Y
KY0053431	Herrington Haven Subdivision	Garrard	001-1	12/31/2020	Phosphorus, total [as P]	00665-1-0	Effluent Gross											4.47	mg/L	mg/L	N
KY0053431	Herrington Haven Subdivision	Garrard	001-1	09/30/2020	Phosphorus, total [as P]	00665-1-0	Effluent Gross	208								3.08	mg/L			mg/L	Y
KY0053431	Herrington Haven Subdivision	Garrard	001-1	09/30/2020	Phosphorus, total [as P]	00665-1-0	Effluent Gross											3.08	mg/L	mg/L	N
KY0053431	Herrington Haven Subdivision	Garrard	001-1	06/30/2020	Phosphorus, total [as P]	00665-1-0	Effluent Gross	41								1.41	mg/L			mg/L	Y
KY0053431	Herrington Haven Subdivision	Garrard	001-1	06/30/2020	Phosphorus, total [as P]	00665-1-0	Effluent Gross											1.41	mg/L	mg/L	N
KY0053431	Herrington Haven Subdivision	Garrard	001-1	03/31/2020	Phosphorus, total [as P]	00665-1-0	Effluent Gross	156								2.56	mg/L			mg/L	Y
KY0053431	Herrington Haven Subdivision	Garrard	001-1	03/31/2020	Phosphorus, total [as P]	00665-1-0	Effluent Gross											2.56	mg/L	mg/L	N
KY0053431	Herrington Haven Subdivision	Garrard	001-1	12/31/2019	Phosphorus, total [as P]	00665-1-0	Effluent Gross									NODI V		NODI V		mg/L	N
KY0053431	Herrington Haven Subdivision	Garrard	001-1	09/30/2019	Phosphorus, total [as P]	00665-1-0	Effluent Gross	94								1.94	mg/L			mg/L	Y

KY0053431	Herrington Haven Subdivision	Garrard	001-1	09/30/2019	Phosphorus, total [as P]	00665-1-0	Effluent Gross											1.94	mg/L	mg/L	N
KY0053431	Herrington Haven Subdivision	Garrard	001-1	06/30/2019	Phosphorus, total [as P]	00665-1-0	Effluent Gross	169								2.69	mg/L			mg/L	Y
KY0053431	Herrington Haven Subdivision	Garrard	001-1	06/30/2019	Phosphorus, total [as P]	00665-1-0	Effluent Gross											2.69	mg/L	mg/L	N
KY0053431	Herrington Haven Subdivision	Garrard	001-1	03/31/2019	Phosphorus, total [as P]	00665-1-0	Effluent Gross	73								1.73	mg/L			mg/L	Y
KY0053431	Herrington Haven Subdivision	Garrard	001-1	03/31/2019	Phosphorus, total [as P]	00665-1-0	Effluent Gross											1.73	mg/L	mg/L	N
KY0053431	Herrington Haven Subdivision	Garrard	001-1	12/31/2018	Phosphorus, total [as P]	00665-1-0	Effluent Gross									.32	mg/L			mg/L	N
KY0053431	Herrington Haven Subdivision	Garrard	001-1	12/31/2018	Phosphorus, total [as P]	00665-1-0	Effluent Gross											.32	mg/L	mg/L	N
KY0053431	Herrington Haven Subdivision	Garrard	001-1	09/30/2018	Phosphorus, total [as P]	00665-1-0	Effluent Gross									NODI V		NODI V		mg/L	N
KY0053431	Herrington Haven Subdivision	Garrard	001-1	06/30/2018	Phosphorus, total [as P]	00665-1-0	Effluent Gross									NODI F		NODI F		mg/L	N
KY0053431	Herrington Haven Subdivision	Garrard	001-1	03/31/2018	Phosphorus, total [as P]	00665-1-0	Effluent Gross									< .125	mg/L			mg/L	N
KY0053431	Herrington Haven Subdivision	Garrard	001-1	03/31/2018	Phosphorus, total [as P]	00665-1-0	Effluent Gross											< .125	mg/L	mg/L	N
KY0053431	Herrington Haven Subdivision	Garrard	001-1	12/31/2021	Flow, in conduit or thru	50050-1-0	Effluent Gross		.105	MGD			MGD								N
KY0053431	Herrington Haven Subdivision	Garrard	001-1	12/31/2021	Flow, in conduit or thru	50050-1-0	Effluent Gross				.105	MGD	MGD								N
KY0053431	Herrington Haven Subdivision	Garrard	001-1	09/30/2021	Flow, in conduit or thru	50050-1-0	Effluent Gross		.191	MGD			MGD								N
KY0053431	Herrington Haven Subdivision	Garrard	001-1	09/30/2021	Flow, in conduit or thru	50050-1-0	Effluent Gross				.191	MGD	MGD								N
KY0053431	Herrington Haven Subdivision	Garrard	001-1	06/30/2021	Flow, in conduit or thru	50050-1-0	Effluent Gross		.032	MGD			MGD								N
KY0053431	Herrington Haven Subdivision	Garrard	001-1	06/30/2021	Flow, in conduit or thru	50050-1-0	Effluent Gross				.032	MGD	MGD								N
KY0053431	Herrington Haven Subdivision	Garrard	001-1	03/31/2021	Flow, in conduit or thru	50050-1-0	Effluent Gross		.001	MGD			MGD								N
KY0053431	Herrington Haven Subdivision	Garrard	001-1	03/31/2021	Flow, in conduit or thru	50050-1-0	Effluent Gross				.001	MGD	MGD								N
KY0053431	Herrington Haven Subdivision	Garrard	001-1	12/31/2020	Flow, in conduit or thru	50050-1-0	Effluent Gross		.00025	MGD			MGD								N
KY0053431	Herrington Haven Subdivision	Garrard	001-1	12/31/2020	Flow, in conduit or thru	50050-1-0	Effluent Gross				.00025	MGD	MGD								N
KY0053431	Herrington Haven Subdivision	Garrard	001-1	09/30/2020	Flow, in conduit or thru	50050-1-0	Effluent Gross		.0005	MGD			MGD								N
KY0053431	Herrington Haven Subdivision	Garrard	001-1	09/30/2020	Flow, in conduit or thru	50050-1-0	Effluent Gross				.0005	MGD	MGD								N
KY0053431	Herrington Haven Subdivision	Garrard	001-1	06/30/2020	Flow, in conduit or thru	50050-1-0	Effluent Gross		.00025	MGD			MGD								N
KY0053431	Herrington Haven Subdivision	Garrard	001-1	06/30/2020	Flow, in conduit or thru	50050-1-0	Effluent Gross				.00025	MGD	MGD								N
KY0053431	Herrington Haven Subdivision	Garrard	001-1	03/31/2020	Flow, in conduit or thru	50050-1-0	Effluent Gross		.00025	MGD			MGD								N
KY0053431	Herrington Haven Subdivision	Garrard	001-1	03/31/2020	Flow, in conduit or thru	50050-1-0	Effluent Gross				.00025	MGD	MGD								N
KY0053431	Herrington Haven Subdivision	Garrard	001-1	12/31/2019	Flow, in conduit or thru	50050-1-0	Effluent Gross		NODI V		NODI V		MGD								N
KY0053431	Herrington Haven Subdivision	Garrard	001-1	09/30/2019	Flow, in conduit or thru	50050-1-0	Effluent Gross		.0005	MGD			MGD								N
KY0053431	Herrington Haven Subdivision	Garrard	001-1	09/30/2019	Flow, in conduit or thru	50050-1-0	Effluent Gross				.0005	MGD	MGD								N
KY0053431	Herrington Haven Subdivision	Garrard	001-1	06/30/2019	Flow, in conduit or thru	50050-1-0	Effluent Gross		.0001	MGD			MGD								N
KY0053431	Herrington Haven Subdivision	Garrard	001-1	06/30/2019	Flow, in conduit or thru	50050-1-0	Effluent Gross				.001	MGD	MGD								N
KY0053431	Herrington Haven Subdivision	Garrard	001-1	03/31/2019	Flow, in conduit or thru	50050-1-0	Effluent Gross		.0002	MGD			MGD								N
KY0053431	Herrington Haven Subdivision	Garrard	001-1	03/31/2019	Flow, in conduit or thru	50050-1-0	Effluent Gross				.0002	MGD	MGD								N
KY0053431	Herrington Haven Subdivision	Garrard	001-1	12/31/2018	Flow, in conduit or thru	50050-1-0	Effluent Gross		.0005	MGD			MGD								N
KY0053431	Herrington Haven Subdivision	Garrard	001-1	12/31/2018	Flow, in conduit or thru	50050-1-0	Effluent Gross				.0005	MGD	MGD								N
KY0053431	Herrington Haven Subdivision	Garrard	001-1	09/30/2018	Flow, in conduit or thru	50050-1-0	Effluent Gross		NODI V		NODI V		MGD								N
KY0053431	Herrington Haven Subdivision	Garrard	001-1	06/30/2018	Flow, in conduit or thru	50050-1-0	Effluent Gross		NODI F		NODI F		MGD								N
KY0053431	Herrington Haven Subdivision	Garrard	001-1	03/31/2018	Flow, in conduit or thru	50050-1-0	Effluent Gross		.0005	MGD			MGD								N
KY0053431	Herrington Haven Subdivision	Garrard	001-1	03/31/2018	Flow, in conduit or thru	50050-1-0	Effluent Gross				.0005	MGD	MGD								N
KY0053431	Herrington Haven Subdivision	Garrard	001-1	12/31/2021	Chlorine, total residual	50060-1-0	Effluent Gross									0	mg/L			mg/L	N
KY0053431	Herrington Haven Subdivision	Garrard	001-1	12/31/2021	Chlorine, total residual	50060-1-0	Effluent Gross											0	mg/L	mg/L	N
KY0053431	Herrington Haven Subdivision	Garrard	001-1	09/30/2021	Chlorine, total residual	50060-1-0	Effluent Gross									< .01	mg/L			mg/L	N
KY0053431	Herrington Haven Subdivision	Garrard	001-1	09/30/2021	Chlorine, total residual	50060-1-0	Effluent Gross											< .01	mg/L	mg/L	N
KY0053431	Herrington Haven Subdivision	Garrard	001-1	06/30/2021	Chlorine, total residual	50060-1-0	Effluent Gross									< .01	mg/L			mg/L	N
KY0053431	Herrington Haven Subdivision	Garrard	001-1	06/30/2021	Chlorine, total residual	50060-1-0	Effluent Gross											< .01	mg/L	mg/L	N
KY0053431	Herrington Haven Subdivision	Garrard	001-1	03/31/2021	Chlorine, total residual	50060-1-0	Effluent Gross									< .01	mg/L			mg/L	N
KY0053431	Herrington Haven Subdivision	Garrard	001-1	03/31/2021	Chlorine, total residual	50060-1-0	Effluent Gross											< .01	mg/L	mg/L	N
KY0053431	Herrington Haven Subdivision	Garrard	001-1	12/31/2020	Chlorine, total residual	50060-1-0	Effluent Gross									< .01	mg/L			mg/L	N
KY0053431	Herrington Haven Subdivision	Garrard	001-1	12/31/2020	Chlorine, total residual	50060-1-0	Effluent Gross											< .01	mg/L	mg/L	N
KY0053431	Herrington Haven Subdivision	Garrard	001-1	09/30/2020	Chlorine, total residual	50060-1-0	Effluent Gross									< .01	mg/L			mg/L	N
KY0053431	Herrington Haven Subdivision	Garrard	001-1	09/30/2020	Chlorine, total residual	50060-1-0	Effluent Gross											< .01	mg/L	mg/L	N
KY0053431	Herrington Haven Subdivision	Garrard	001-1	06/30/2020	Chlorine, total residual	50060-1-0	Effluent Gross									< .01	mg/L			mg/L	N
KY0053431	Herrington Haven Subdivision	Garrard	001-1	06/30/2020	Chlorine, total residual	50060-1-0	Effluent Gross											< .01	mg/L	mg/L	N
KY0053431	Herrington Haven Subdivision	Garrard	001-1	03/31/2020	Chlorine, total residual	50060-1-0	Effluent Gross	8991								1	mg/L			mg/L	Y
KY0053431	Herrington Haven Subdivision	Garrard	001-1	03/31/2020	Chlorine, total residual	50060-1-0	Effluent Gross	5163										1	mg/L	mg/L	Y
KY0053431	Herrington Haven Subdivision	Garrard	001-1	12/31/2019	Chlorine, total residual	50060-1-0	Effluent Gross									NODI V		NODI V		mg/L	N
KY0053431	Herrington Haven Subdivision	Garrard	001-1	09/30/2019	Chlorine, total residual	50060-1-0	Effluent Gross									< .01	mg/L			mg/L	N
KY0053431	Herrington Haven Subdivision	Garrard	001-1	09/30/2019	Chlorine, total residual	50060-1-0	Effluent Gross											< .01	mg/L	mg/L	N
KY0053431	Herrington Haven Subdivision	Garrard	001-1	06/30/2019	Chlorine, total residual	50060-1-0	Effluent Gross									< .01	mg/L			mg/L	N
KY0053431	Herrington Haven Subdivision	Garrard	001-1	06/30/2019	Chlorine, total residual	50060-1-0	Effluent Gross											< .01	mg/L	mg/L	N
KY0053431	Herrington Haven Subdivision	Garrard	001-1	03/31/2019	Chlorine, total residual	50060-1-0	Effluent Gross	13536								1.5	mg/L			mg/L	Y
KY0053431	Herrington Haven Subdivision	Garrard	001-1	03/31/2019	Chlorine, total residual	50060-1-0	Effluent Gross	7795										1.5	mg/L	mg/L	Y
KY0053431	Herrington Haven Subdivision	Garrard	001-1	12/31/2018	Chlorine, total residual	50060-1-0	Effluent Gross									< .01	mg/L			mg/L	N
KY0053431	Herrington Haven Subdivision	Garrard	001-1	12/31/2018	Chlorine, total residual	50060-1-0	Effluent Gross											< .01	mg/L	mg/L	N
KY0053431	Herrington Haven Subdivision	Garrard	001-1	09/30/2018	Chlorine, total residual	50060-1-0	Effluent Gross									NODI V		NODI V		mg/L	N
KY0053431	Herrington Haven Subdivision	Garrard	001-1	06/30/2018	Chlorine, total residual	50060-1-0	Effluent Gross									NODI F		NODI F		mg/L	N
KY0053431	Herrington Haven Subdivision	Garrard	001-1	03/31/2018	Chlorine, total residual	50060-1-0	Effluent Gross									< .01	mg/L			mg/L	N
KY0053431	Herrington Haven Subdivision	Garrard	001-1	03/31/2018	Chlorine, total residual	50060-1-0	Effluent Gross											< .01	mg/L	mg/L	N
KY0053431	Herrington Haven Subdivision	Garrard	001-1	12/31/2021	E. coli	51040-1-0	Effluent Gross									1	#/100mL			#/100mL	N
KY0053431	Herrington Haven Subdivision	Garrard	001-1	12/31/2021	E. coli	51040-1-0	Effluent Gross											1	#/100mL	#/100mL	N
KY0053431	Herrington Haven Subdivision	Garrard	001-1	09/30/2021	E. coli	51040-1-0	Effluent Gross									1	#/100mL			#/100mL	N
KY0053431	Herrington Haven Subdivision	Garrard	001-1	09/30/2021	E. coli	51040-1-0	Effluent Gross											1	#/100mL	#/100mL	N
KY0053431	Herrington Haven Subdivision	Garrard	001-1	06/30/2021	E. coli	51040-1-0	Effluent Gross									12	#/100mL			#/100mL	N
KY0053431	Herrington Haven Subdivision	Garrard	001-1	06/30/2021	E. coli	51040-1-0	Effluent Gross											12	#/100mL	#/100mL	N
KY0053431	Herrington Haven Subdivision	Garrard	001-1	03/31/2021	E. coli	51040-1-0	Effluent Gross									< 1	#/100mL			#/100mL	N
KY0053431	Herrington Haven Subdivision	Garrard	001-1	03/31/2021	E. coli	51040-1-0	Effluent Gross											< 1	#/100mL	#/100mL	N
KY0053431	Herrington Haven Subdivision	Garrard	001-1	12/31/2020	E. coli	51040-1-0	Effluent Gross									3	#/100mL			#/100mL	N
KY0053431	Herrington Haven Subdivision	Garrard	001-1	12/31/2020	E. coli	51040-1-0	Effluent Gross											3	#/100mL	#/100mL	N
KY0053431	Herrington Haven Subdivision	Garrard	001-1	09/30/2020	E. coli	51040-1-0	Effluent Gross	12								145	#/100mL			#/100mL	Y
KY0053431	Herrington Haven Subdivision	Garrard	001-1	09/30/2020	E. coli	51040-1-0	Effluent Gross											145	#/100mL	#/100mL	N
KY0053431	Herrington Haven Subdivision	Garrard	001-1	06/30/2020	E. coli	51040-1-0	Effluent Gross									< 1	#/100mL			#/100mL	N
KY0053431	Herrington Haven Subdivision	Garrard	001-1	06/30/2020	E. coli	51040-1-0	Effluent Gross											< 1	#/100mL	#/100mL	N
KY0053431	Herrington Haven Subdivision	Garrard	001-1	03/31/2020	E. coli	51040-1-0	Effluent Gross									< 1	#/100mL			#/100mL	N
KY0053431	Herrington Haven Subdivision	Garrard	001-1	03/31/2020	E. coli	51040-1-0	Effluent Gross											< 1	#/100mL	#/100mL	N
KY0053431	Herrington Haven Subdivision	Garrard	001-1	12/31/2019	E. coli	51040-1-0	Effluent Gross									NODI V		NODI V		#/100mL	N
KY0053431	Herrington Haven Subdivision	Garrard	001-1	09/30/2019	E. coli	51040-1-0	Effluent Gross	43								186	#/100mL			#/100mL	Y
KY0053431	Herrington Haven Subdivision	Garrard	001-1	09/30/2019	E. coli	51040-1-0	Effluent Gross											186	#/100mL	#/100mL	N
KY0053431	Herrington Haven Subdivision	Garrard	001-1	06/30/2019	E. coli	51040-1-0	Effluent Gross									< 1	#/100mL			#/100mL	N
KY0053431	Herrington Haven Subdivision	Garrard	001-1	06/30/2019	E. coli	51040-1-0	Effluent Gross											< 1	#/100mL	#/100mL	N

KY0053431	Herrington Haven Subdivision	Garrard	001-1	03/31/2019	E. coli	51040-1-0	Effluent Gross									< 1	#/100mL			#/100mL	N
KY0053431	Herrington Haven Subdivision	Garrard	001-1	03/31/2019	E. coli	51040-1-0	Effluent Gross											< 1	#/100mL	#/100mL	N
KY0053431	Herrington Haven Subdivision	Garrard	001-1	12/31/2018	E. coli	51040-1-0	Effluent Gross									< 1	#/100mL			#/100mL	N
KY0053431	Herrington Haven Subdivision	Garrard	001-1	12/31/2018	E. coli	51040-1-0	Effluent Gross											< 1	#/100mL	#/100mL	N
KY0053431	Herrington Haven Subdivision	Garrard	001-1	09/30/2018	E. coli	51040-1-0	Effluent Gross									NODI V		NODI V		#/100mL	N
KY0053431	Herrington Haven Subdivision	Garrard	001-1	06/30/2018	E. coli	51040-1-0	Effluent Gross									NODI F		NODI F		#/100mL	N
KY0053431	Herrington Haven Subdivision	Garrard	001-1	03/31/2018	E. coli	51040-1-0	Effluent Gross									< 1	#/100mL			#/100mL	N
KY0053431	Herrington Haven Subdivision	Garrard	001-1	03/31/2018	E. coli	51040-1-0	Effluent Gross											< 1	#/100mL	#/100mL	N

NPDES ID	Permit Name	County Name	Perm Feature ID-Limit Set	Mon. Period End Date	Parameter Desc	Param Cd - MLC - Season ID	Monitoring Location Desc	Worst % exced.	Quantity 1	Q1 DMR Value Unit Short Desc	Quantity 2	Q2 DMR Value Unit Short Desc	Limit Value - Quantity Units	Concentration 1	C1 DMR Value Unit Short Desc	Concentration 2	C2 DMR Value Unit Short Desc	Concentration 3	C3 DMR Value Unit Short Desc	Limit Value - Concentration Units	Effluent Vio. Exists
KY0053431	Herrington Haven Subdivision	Garrard	001-2	03/31/2022	Oxygen, dissolved [DO]	00300-1-0	Effluent Gross							9.2	mg/L					mg/L	N
KY0053431	Herrington Haven Subdivision	Garrard	001-2	03/31/2022	BOD, 5-day, 20 deg. C	00310-1-0	Effluent Gross									4	mg/L			mg/L	N
KY0053431	Herrington Haven Subdivision	Garrard	001-2	03/31/2022	BOD, 5-day, 20 deg. C	00310-1-0	Effluent Gross											4	mg/L	mg/L	N
KY0053431	Herrington Haven Subdivision	Garrard	001-2	03/31/2022	pH	00400-1-0	Effluent Gross							6.73	SU					SU	N
KY0053431	Herrington Haven Subdivision	Garrard	001-2	03/31/2022	pH	00400-1-0	Effluent Gross											6.73	SU	SU	N
KY0053431	Herrington Haven Subdivision	Garrard	001-2	03/31/2022	Solids, total suspended	00530-1-0	Effluent Gross									26	mg/L			mg/L	N
KY0053431	Herrington Haven Subdivision	Garrard	001-2	03/31/2022	Solids, total suspended	00530-1-0	Effluent Gross											26	mg/L	mg/L	N
KY0053431	Herrington Haven Subdivision	Garrard	001-2	03/31/2022	Nitrogen, total [as N]	00600-1-0	Effluent Gross									44.98	mg/L			mg/L	N
KY0053431	Herrington Haven Subdivision	Garrard	001-2	03/31/2022	Nitrogen, total [as N]	00600-1-0	Effluent Gross											44.98	mg/L	mg/L	N
KY0053431	Herrington Haven Subdivision	Garrard	001-2	03/31/2022	Nitrogen, ammonia total [as	00610-1-0	Effluent Gross									.15	mg/L			mg/L	N
KY0053431	Herrington Haven Subdivision	Garrard	001-2	03/31/2022	Nitrogen, ammonia total [as	00610-1-0	Effluent Gross											.15	mg/L	mg/L	N
KY0053431	Herrington Haven Subdivision	Garrard	001-2	03/31/2022	Phosphorus, total [as P]	00665-1-0	Effluent Gross									7.7	mg/L			mg/L	N
KY0053431	Herrington Haven Subdivision	Garrard	001-2	03/31/2022	Phosphorus, total [as P]	00665-1-0	Effluent Gross											7.7	mg/L	mg/L	N
KY0053431	Herrington Haven Subdivision	Garrard	001-2	03/31/2022	Flow, in conduit or thru	50050-1-0	Effluent Gross		<= .05	MGD			MGD								N
KY0053431	Herrington Haven Subdivision	Garrard	001-2	03/31/2022	Flow, in conduit or thru	50050-1-0	Effluent Gross				<= .0016	MGD	MGD								N
KY0053431	Herrington Haven Subdivision	Garrard	001-2	03/31/2022	Chlorine, total residual	50060-1-0	Effluent Gross									0	mg/L			mg/L	N
KY0053431	Herrington Haven Subdivision	Garrard	001-2	03/31/2022	Chlorine, total residual	50060-1-0	Effluent Gross											0	mg/L	mg/L	N
KY0053431	Herrington Haven Subdivision	Garrard	001-2	03/31/2022	E. coli	51040-1-0	Effluent Gross									1	#/100mL			#/100mL	N
KY0053431	Herrington Haven Subdivision	Garrard	001-2	03/31/2022	E. coli	51040-1-0	Effluent Gross											1	#/100mL	#/100mL	N

Non-Receipt Vio. Exists	DMR Received Date
N	1/21/2022
N	10/22/2021
N	7/22/2021
N	4/27/2021
N	1/27/2021
N	10/26/2020
N	7/27/2020
N	4/25/2020
N	1/19/2020
N	10/27/2019
N	7/25/2019
N	4/25/2019
N	1/24/2019
N	11/5/2018
N	7/25/2018
N	4/29/2018
N	1/21/2022
N	1/21/2022
N	1/21/2022
N	1/21/2022
N	10/22/2021
N	10/22/2021
N	10/22/2021
N	10/22/2021
N	7/22/2021
N	7/22/2021
N	7/22/2021
N	7/22/2021
N	4/27/2021
N	4/27/2021
N	4/27/2021
N	4/27/2021
N	1/27/2021
N	1/27/2021
N	1/27/2021
N	1/27/2021
N	10/26/2020
N	10/26/2020
N	10/26/2020
N	10/26/2020
N	7/27/2020
N	7/27/2020
N	7/27/2020
N	7/27/2020
N	7/27/2020
N	4/25/2020
N	4/25/2020
N	4/25/2020
N	4/25/2020
N	1/19/2020
N	1/19/2020
N	10/27/2019
N	10/27/2019
N	10/27/2019
N	10/27/2019
N	7/25/2019
N	7/25/2019
N	7/25/2019
N	7/25/2019
N	4/25/2019
N	4/25/2019
N	4/25/2019
N	4/25/2019
N	1/24/2019
N	1/24/2019
N	1/24/2019
N	1/24/2019
N	11/5/2018
N	11/5/2018
N	7/25/2018
N	7/25/2018
N	4/29/2018
N	4/29/2018
N	4/29/2018
N	4/29/2018
N	1/21/2022
N	1/21/2022
N	10/22/2021
N	10/22/2021
N	7/22/2021
N	7/22/2021
N	4/27/2021
N	4/27/2021
N	1/27/2021
N	1/27/2021
N	10/26/2020
N	10/26/2020

N	7/27/2020
N	7/27/2020
N	4/25/2020
N	4/25/2020
N	1/19/2020
N	10/27/2019
N	10/27/2019
N	7/25/2019
N	7/25/2019
N	4/25/2019
N	4/25/2019
N	1/24/2019
N	1/24/2019
N	11/5/2018
N	7/25/2018
N	4/29/2018
N	4/29/2018
N	1/21/2022
N	1/21/2022
N	1/21/2022
N	1/21/2022
N	10/22/2021
N	10/22/2021
N	10/22/2021
N	10/22/2021
N	7/22/2021
N	7/22/2021
N	7/22/2021
N	7/22/2021
N	4/27/2021
N	4/27/2021
N	4/27/2021
N	4/27/2021
N	1/27/2021
N	1/27/2021
N	1/27/2021
N	1/27/2021
N	10/26/2020
N	10/26/2020
N	10/26/2020
N	10/26/2020
N	7/27/2020
N	7/27/2020
N	7/27/2020
N	7/27/2020
N	4/25/2020
N	4/25/2020
N	4/25/2020
N	4/25/2020
N	4/25/2020
N	1/19/2020
N	1/19/2020
N	10/27/2019
N	10/27/2019
N	10/27/2019
N	10/27/2019
N	7/25/2019
N	7/25/2019
N	7/25/2019
N	7/25/2019
N	4/25/2019
N	4/25/2019
N	4/25/2019
N	4/25/2019
N	1/24/2019
N	1/24/2019
N	1/24/2019
N	1/24/2019
N	11/5/2018
N	11/5/2018
N	7/25/2018
N	7/25/2018
N	4/29/2018
N	4/29/2018
N	4/29/2018
N	4/29/2018
N	1/21/2022
N	1/21/2022
N	10/22/2021
N	10/22/2021
N	7/22/2021
N	7/22/2021
N	4/27/2021
N	4/27/2021
N	1/27/2021
N	1/27/2021
N	10/26/2020
N	10/26/2020
N	7/27/2020
N	7/27/2020
N	4/25/2020

N	4/25/2020
N	1/19/2020
N	10/27/2019
N	10/27/2019
N	7/25/2019
N	7/25/2019
N	4/25/2019
N	4/25/2019
N	1/24/2019
N	1/24/2019
N	11/5/2018
N	7/25/2018
N	4/29/2018
N	4/29/2018
N	1/21/2022
N	1/21/2022
N	1/21/2022
N	1/21/2022
N	10/22/2021
N	10/22/2021
N	10/22/2021
N	10/22/2021
N	7/22/2021
N	7/22/2021
N	7/22/2021
N	7/22/2021
N	4/27/2021
N	4/27/2021
N	4/27/2021
N	4/27/2021
N	1/27/2021
N	1/27/2021
N	1/27/2021
N	1/27/2021
N	10/26/2020
N	10/26/2020
N	10/26/2020
N	10/26/2020
N	7/27/2020
N	7/27/2020
N	7/27/2020
N	7/27/2020
N	4/25/2020
N	4/25/2020
N	4/25/2020
N	4/25/2020
N	4/25/2020
N	1/19/2020
N	10/27/2019
N	10/27/2019
N	10/27/2019
N	10/27/2019
N	7/25/2019
N	7/25/2019
N	7/25/2019
N	7/25/2019
N	4/25/2019
N	4/25/2019
N	4/25/2019
N	4/25/2019
N	1/24/2019
N	1/24/2019
N	1/24/2019
N	1/24/2019
N	11/5/2018
N	11/5/2018
N	7/25/2018
N	7/25/2018
N	4/29/2018
N	4/29/2018
N	4/29/2018
N	4/29/2018
N	1/21/2022
N	1/21/2022
N	10/22/2021
N	10/22/2021
N	7/22/2021
N	7/22/2021
N	4/27/2021
N	4/27/2021
N	1/27/2021
N	1/27/2021
N	10/26/2020
N	10/26/2020
N	7/27/2020
N	7/27/2020
N	4/25/2020
N	4/25/2020
N	1/19/2020
N	10/27/2019

N	10/27/2019
N	7/25/2019
N	7/25/2019
N	4/25/2019
N	4/25/2019
N	1/24/2019
N	1/24/2019
N	11/5/2018
N	7/25/2018
N	4/29/2018
N	4/29/2018
N	1/21/2022
N	1/21/2022
N	10/22/2021
N	10/22/2021
N	7/22/2021
N	7/22/2021
N	4/27/2021
N	4/27/2021
N	1/27/2021
N	1/27/2021
N	10/26/2020
N	10/26/2020
N	7/27/2020
N	7/27/2020
N	4/25/2020
N	4/25/2020
N	1/19/2020
N	10/27/2019
N	10/27/2019
N	7/25/2019
N	7/25/2019
N	4/25/2019
N	4/25/2019
N	1/24/2019
N	1/24/2019
N	11/5/2018
N	7/25/2018
N	4/29/2018
N	4/29/2018
N	1/21/2022
N	1/21/2022
N	10/22/2021
N	10/22/2021
N	7/22/2021
N	7/22/2021
N	4/27/2021
N	4/27/2021
N	1/27/2021
N	1/27/2021
N	10/26/2020
N	10/26/2020
N	7/27/2020
N	7/27/2020
N	4/25/2020
N	4/25/2020
N	1/19/2020
N	10/27/2019
N	10/27/2019
N	7/25/2019
N	7/25/2019

N	4/25/2019
N	4/25/2019
N	1/24/2019
N	1/24/2019
N	11/5/2018
N	7/25/2018
N	4/29/2018
N	4/29/2018

Non-Receipt Vio. Exists	DMR Received Date
N	4/18/2022
N	4/18/2022
N	4/18/2022
N	4/18/2022
N	4/18/2022
N	4/18/2022
N	4/18/2022
N	4/18/2022
N	4/18/2022
N	4/18/2022
N	4/18/2022
N	4/18/2022
N	4/18/2022
N	4/18/2022
N	4/18/2022
N	4/18/2022
N	4/18/2022
N	4/18/2022
N	4/18/2022
N	4/18/2022

KEY NODI B

NPDES ID	Permit Name	County Name	Perm Feature ID-Limit Set	Mon. Period End Date	Parameter Desc	Param Cd - MLC - Season ID	Monitoring Location Desc	Worst % exced.	Quantity 1	Q1 DMR Value Unit Short Desc	Quantity 2	Q2 DMR Value Unit Short Desc	Limit Value - Quantity Units	Concentration 1	C1 DMR Value Unit Short Desc	Concentration 2	C2 DMR Value Unit Short Desc	Concentration 3	C3 DMR Value Unit Short Desc	Limit Value - Concentration Units	Effluent Vio. Exists
KY0080845	Great Oaks WWTF	McCracken	001-1	09/30/2019	Oxygen, dissolved [DO]	00300-1-0	Effluent Gross							8.3						mg/L	N
KY0080845	Great Oaks WWTF	McCracken	001-1	08/31/2019	Oxygen, dissolved [DO]	00300-1-0	Effluent Gross	6						6.6						mg/L	Y
KY0080845	Great Oaks WWTF	McCracken	001-1	07/31/2019	Oxygen, dissolved [DO]	00300-1-0	Effluent Gross													mg/L	N
KY0080845	Great Oaks WWTF	McCracken	001-1	06/30/2019	Oxygen, dissolved [DO]	00300-1-0	Effluent Gross													mg/L	N
KY0080845	Great Oaks WWTF	McCracken	001-1	05/31/2019	Oxygen, dissolved [DO]	00300-1-0	Effluent Gross													mg/L	N
KY0080845	Great Oaks WWTF	McCracken	001-1	04/30/2019	Oxygen, dissolved [DO]	00300-1-0	Effluent Gross													mg/L	N
KY0080845	Great Oaks WWTF	McCracken	001-1	03/31/2019	Oxygen, dissolved [DO]	00300-1-0	Effluent Gross							7.41	mg/L					mg/L	N
KY0080845	Great Oaks WWTF	McCracken	001-1	02/28/2019	Oxygen, dissolved [DO]	00300-1-0	Effluent Gross							8.07	mg/L					mg/L	N
KY0080845	Great Oaks WWTF	McCracken	001-1	01/31/2019	Oxygen, dissolved [DO]	00300-1-0	Effluent Gross							9.17	mg/L					mg/L	N
KY0080845	Great Oaks WWTF	McCracken	001-1	12/31/2018	Oxygen, dissolved [DO]	00300-1-0	Effluent Gross							9.25	mg/L					mg/L	N
KY0080845	Great Oaks WWTF	McCracken	001-1	11/30/2018	Oxygen, dissolved [DO]	00300-1-0	Effluent Gross							7.12	mg/L					mg/L	N
KY0080845	Great Oaks WWTF	McCracken	001-1	10/31/2018	Oxygen, dissolved [DO]	00300-1-0	Effluent Gross							9.38	mg/L					mg/L	N
KY0080845	Great Oaks WWTF	McCracken	001-1	09/30/2018	Oxygen, dissolved [DO]	00300-1-0	Effluent Gross							7	mg/L					mg/L	N
KY0080845	Great Oaks WWTF	McCracken	001-1	08/31/2018	Oxygen, dissolved [DO]	00300-1-0	Effluent Gross							7.01	mg/L					mg/L	N
KY0080845	Great Oaks WWTF	McCracken	001-1	07/31/2018	Oxygen, dissolved [DO]	00300-1-0	Effluent Gross	6						6.61	mg/L					mg/L	Y
KY0080845	Great Oaks WWTF	McCracken	001-1	06/30/2018	Oxygen, dissolved [DO]	00300-1-0	Effluent Gross	2						6.84	mg/L					mg/L	Y
KY0080845	Great Oaks WWTF	McCracken	001-1	05/31/2018	Oxygen, dissolved [DO]	00300-1-0	Effluent Gross	24						5.35	mg/L					mg/L	Y
KY0080845	Great Oaks WWTF	McCracken	001-1	04/30/2018	Oxygen, dissolved [DO]	00300-1-0	Effluent Gross													mg/L	N
KY0080845	Great Oaks WWTF	McCracken	001-1	03/31/2018	Oxygen, dissolved [DO]	00300-1-0	Effluent Gross	18						5.74	mg/L					mg/L	Y
KY0080845	Great Oaks WWTF	McCracken	001-1	02/28/2018	Oxygen, dissolved [DO]	00300-1-0	Effluent Gross							8.86	mg/L					mg/L	N
KY0080845	Great Oaks WWTF	McCracken	001-1	01/31/2018	Oxygen, dissolved [DO]	00300-1-0	Effluent Gross							11.4	mg/L					mg/L	N
KY0080845	Great Oaks WWTF	McCracken	001-1	12/31/2017	Oxygen, dissolved [DO]	00300-1-0	Effluent Gross							7	mg/L					mg/L	N
KY0080845	Great Oaks WWTF	McCracken	001-1	11/30/2017	Oxygen, dissolved [DO]	00300-1-0	Effluent Gross							7.5	mg/L					mg/L	N
KY0080845	Great Oaks WWTF	McCracken	001-1	10/31/2017	Oxygen, dissolved [DO]	00300-1-0	Effluent Gross							7	mg/L					mg/L	N
KY0080845	Great Oaks WWTF	McCracken	001-1	09/30/2017	Oxygen, dissolved [DO]	00300-1-0	Effluent Gross							7	mg/L					mg/L	N
KY0080845	Great Oaks WWTF	McCracken	001-1	08/31/2017	Oxygen, dissolved [DO]	00300-1-0	Effluent Gross							7.3	mg/L					mg/L	N
KY0080845	Great Oaks WWTF	McCracken	001-1	07/31/2017	Oxygen, dissolved [DO]	00300-1-0	Effluent Gross							7.3	mg/L					mg/L	N
KY0080845	Great Oaks WWTF	McCracken	001-1	06/30/2017	Oxygen, dissolved [DO]	00300-1-0	Effluent Gross							7	mg/L					mg/L	N
KY0080845	Great Oaks WWTF	McCracken	001-1	05/31/2017	Oxygen, dissolved [DO]	00300-1-0	Effluent Gross							7	mg/L					mg/L	N
KY0080845	Great Oaks WWTF	McCracken	001-1	04/30/2017	Oxygen, dissolved [DO]	00300-1-0	Effluent Gross							7	mg/L					mg/L	N
KY0080845	Great Oaks WWTF	McCracken	001-1	03/31/2017	Oxygen, dissolved [DO]	00300-1-0	Effluent Gross							7.2	mg/L					mg/L	N
KY0080845	Great Oaks WWTF	McCracken	001-1	02/28/2017	Oxygen, dissolved [DO]	00300-1-0	Effluent Gross							7	mg/L					mg/L	N
KY0080845	Great Oaks WWTF	McCracken	001-1	01/31/2017	Oxygen, dissolved [DO]	00300-1-0	Effluent Gross							7.2	mg/L					mg/L	N
KY0080845	Great Oaks WWTF	McCracken	001-1	12/31/2016	Oxygen, dissolved [DO]	00300-1-0	Effluent Gross							7	mg/L					mg/L	N
KY0080845	Great Oaks WWTF	McCracken	001-1	11/30/2016	Oxygen, dissolved [DO]	00300-1-0	Effluent Gross							7	mg/L					mg/L	N
KY0080845	Great Oaks WWTF	McCracken	001-1	10/31/2016	Oxygen, dissolved [DO]	00300-1-0	Effluent Gross							7	mg/L					mg/L	N
KY0080845	Great Oaks WWTF	McCracken	001-1	09/30/2016	Oxygen, dissolved [DO]	00300-1-0	Effluent Gross							7	mg/L					mg/L	N
KY0080845	Great Oaks WWTF	McCracken	001-1	08/31/2016	Oxygen, dissolved [DO]	00300-1-0	Effluent Gross							7	mg/L					mg/L	N
KY0080845	Great Oaks WWTF	McCracken	001-1	07/31/2016	Oxygen, dissolved [DO]	00300-1-0	Effluent Gross							7.3	mg/L					mg/L	N
KY0080845	Great Oaks WWTF	McCracken	001-1	06/30/2016	Oxygen, dissolved [DO]	00300-1-0	Effluent Gross							7.2	mg/L					mg/L	N
KY0080845	Great Oaks WWTF	McCracken	001-1	05/31/2016	Oxygen, dissolved [DO]	00300-1-0	Effluent Gross							7.2	mg/L					mg/L	N
KY0080845	Great Oaks WWTF	McCracken	001-1	04/30/2016	Oxygen, dissolved [DO]	00300-1-0	Effluent Gross							7.4	mg/L					mg/L	N
KY0080845	Great Oaks WWTF	McCracken	001-1	03/31/2016	Oxygen, dissolved [DO]	00300-1-0	Effluent Gross							7	mg/L					mg/L	N
KY0080845	Great Oaks WWTF	McCracken	001-1	02/29/2016	Oxygen, dissolved [DO]	00300-1-0	Effluent Gross							7	mg/L					mg/L	N
KY0080845	Great Oaks WWTF	McCracken	001-1	01/31/2016	Oxygen, dissolved [DO]	00300-1-0	Effluent Gross							7	mg/L					mg/L	N
KY0080845	Great Oaks WWTF	McCracken	001-1	12/31/2015	Oxygen, dissolved [DO]	00300-1-0	Effluent Gross							7	mg/L					mg/L	N
KY0080845	Great Oaks WWTF	McCracken	001-1	11/30/2015	Oxygen, dissolved [DO]	00300-1-0	Effluent Gross							7.5	mg/L					mg/L	N
KY0080845	Great Oaks WWTF	McCracken	001-1	10/31/2015	Oxygen, dissolved [DO]	00300-1-0	Effluent Gross							7	mg/L					mg/L	N
KY0080845	Great Oaks WWTF	McCracken	001-1	09/30/2015	Oxygen, dissolved [DO]	00300-1-0	Effluent Gross							7.4	mg/L					mg/L	N
KY0080845	Great Oaks WWTF	McCracken	001-1	08/31/2015	Oxygen, dissolved [DO]	00300-1-0	Effluent Gross							7.8	mg/L					mg/L	N
KY0080845	Great Oaks WWTF	McCracken	001-1	07/31/2015	Oxygen, dissolved [DO]	00300-1-0	Effluent Gross							7	mg/L					mg/L	N
KY0080845	Great Oaks WWTF	McCracken	001-1	06/30/2015	Oxygen, dissolved [DO]	00300-1-0	Effluent Gross							7.5	mg/L					mg/L	N
KY0080845	Great Oaks WWTF	McCracken	001-1	05/31/2015	Oxygen, dissolved [DO]	00300-1-0	Effluent Gross							7.5	mg/L					mg/L	N
KY0080845	Great Oaks WWTF	McCracken	001-1	04/30/2015	Oxygen, dissolved [DO]	00300-1-0	Effluent Gross							7	mg/L					mg/L	N
KY0080845	Great Oaks WWTF	McCracken	001-1	03/31/2015	Oxygen, dissolved [DO]	00300-1-0	Effluent Gross							7.4	mg/L					mg/L	N
KY0080845	Great Oaks WWTF	McCracken	001-1	02/28/2015	Oxygen, dissolved [DO]	00300-1-0	Effluent Gross							7.4	mg/L					mg/L	N
KY0080845	Great Oaks WWTF	McCracken	001-1	01/31/2015	Oxygen, dissolved [DO]	00300-1-0	Effluent Gross							8.2	mg/L					mg/L	N
KY0080845	Great Oaks WWTF	McCracken	001-1	12/31/2014	Oxygen, dissolved [DO]	00300-1-0	Effluent Gross							7.5	mg/L					mg/L	N
KY0080845	Great Oaks WWTF	McCracken	001-1	11/30/2014	Oxygen, dissolved [DO]	00300-1-0	Effluent Gross							7.4	mg/L					mg/L	N
KY0080845	Great Oaks WWTF	McCracken	001-1	10/31/2014	Oxygen, dissolved [DO]	00300-1-0	Effluent Gross							7.2	mg/L					mg/L	N
KY0080845	Great Oaks WWTF	McCracken	001-1	09/30/2019	pH	00400-1-0	Effluent Gross							8.3				8.3		SU	N
KY0080845	Great Oaks WWTF	McCracken	001-1	08/31/2019	pH	00400-1-0	Effluent Gross							7.8				7.8		SU	N
KY0080845	Great Oaks WWTF	McCracken	001-1	07/31/2019	pH	00400-1-0	Effluent Gross													SU	N
KY0080845	Great Oaks WWTF	McCracken	001-1	06/30/2019	pH	00400-1-0	Effluent Gross													SU	N
KY0080845	Great Oaks WWTF	McCracken	001-1	05/31/2019	pH	00400-1-0	Effluent Gross													SU	N
KY0080845	Great Oaks WWTF	McCracken	001-1	04/30/2019	pH	00400-1-0	Effluent Gross													SU	N
KY0080845	Great Oaks WWTF	McCracken	001-1	03/31/2019	pH	00400-1-0	Effluent Gross							8.08	SU					SU	N
KY0080845	Great Oaks WWTF	McCracken	001-1	03/31/2019	pH	00400-1-0	Effluent Gross											8.08	SU	SU	N
KY0080845	Great Oaks WWTF	McCracken	001-1	02/28/2019	pH	00400-1-0	Effluent Gross							7.21	SU					SU	N
KY0080845	Great Oaks WWTF	McCracken	001-1	02/28/2019	pH	00400-1-0	Effluent Gross											7.21	SU	SU	N
KY0080845	Great Oaks WWTF	McCracken	001-1	01/31/2019	pH	00400-1-0	Effluent Gross							7.44	SU					SU	N
KY0080845	Great Oaks WWTF	McCracken	001-1	01/31/2019	pH	00400-1-0	Effluent Gross											7.44	SU	SU	N
KY0080845	Great Oaks WWTF	McCracken	001-1	12/31/2018	pH	00400-1-0	Effluent Gross							7.38	SU					SU	N
KY0080845	Great Oaks WWTF	McCracken	001-1	12/31/2018	pH	00400-1-0	Effluent Gross											7.38	SU	SU	N
KY0080845	Great Oaks WWTF	McCracken	001-1	11/30/2018	pH	00400-1-0	Effluent Gross							7.71	SU					SU	N
KY0080845	Great Oaks WWTF	McCracken	001-1	11/30/2018	pH	00400-1-0	Effluent Gross											7.71	SU	SU	N
KY0080845	Great Oaks WWTF	McCracken	001-1	10/31/2018	pH	00400-1-0	Effluent Gross							6.85	SU					SU	N
KY0080845	Great Oaks WWTF	McCracken	001-1	10/31/2018	pH	00400-1-0	Effluent Gross											6.85	SU	SU	N
KY0080845	Great Oaks WWTF	McCracken	001-1	09/30/2018	pH	00400-1-0	Effluent Gross							7.12	SU					SU	N
KY0080845	Great Oaks WWTF	McCracken	001-1	09/30/2018	pH	00400-1-0	Effluent Gross											7.12	SU	SU	N
KY0080845	Great Oaks WWTF	McCracken	001-1	08/31/2018	pH	00400-1-0	Effluent Gross							7.32	SU					SU	N
KY0080845	Great Oaks WWTF	McCracken	001-1	08/31/2018	pH	00400-1-0	Effluent Gross											7.32	SU	SU	N
KY0080845	Great Oaks WWTF	McCracken	001-1	07/31/2018	pH	00400-1-0	Effluent Gross							7.43	SU					SU	N
KY0080845	Great Oaks WWTF	McCracken	001-1	07/31/2018	pH	00400-1-0	Effluent Gross											7.43	SU	SU	N
KY0080845	Great Oaks WWTF	McCracken	001-1	06/30/2018	pH	00400-1-0	Effluent Gross							7.26	SU					SU	N
KY0080845	Great Oaks WWTF	McCracken	001-1	06/30/2018	pH	00400-1-0	Effluent Gross											7.26	SU	SU	N
KY0080845	Great Oaks WWTF	McCracken	001-1	05/31/2018	pH	00400-1-0	Effluent Gross							7.21	SU					SU	N
KY0080845	Great Oaks WWTF	McCracken	001-1	05/31/2018	pH	00400-1-0	Effluent Gross											7.21	SU	SU	N
KY0080845	Great Oaks WWTF	McCracken	001-1	04/30/2018	pH	00400-1-0	Effluent Gross													SU	N
KY0080845	Great Oaks WWTF	McCracken	001-1	03/31/2018	pH	00400-1-0	Effluent Gross							6.78	SU					SU	N
KY0080845	Great Oaks WWTF	McCracken	001-1	03/31/2018	pH	00400-1-0	Effluent Gross											6.78	SU	SU	N
KY0080845	Great Oaks WWTF	McCracken	001-1	02/28/2018	pH	00400-1-0	Effluent Gross							7.42	SU					SU	N
KY0080845	Great Oaks WWTF	McCracken	001-1	02/28/2018	pH	00400-1-0	Effluent Gross											7.42	SU	SU	N
KY0080845	Great Oaks WWTF	McCracken	001-1	01/31/2018	pH	00400-1-0	Effluent Gross							7.05	SU					SU	N
KY0080845	Great Oaks WWTF	McCracken	001-1	01/31/2018	pH	00400-1-0	Effluent Gross											7.05	SU	SU	N
KY0080845	Great Oaks WWTF	McCracken	001-1	12/31/2017	pH	00400-1-0	Effluent Gross							67	SU					SU	N
KY0080845	Great Oaks WWTF	McCracken	001-1	12/31/2017	pH	00400-1-0	Effluent Gross											6.7	SU	SU	N
KY0080845	Great Oaks WWTF	McCracken	001-1	11/30/2017	pH	00400-1-0	Effluent Gross							65	SU					SU	N
KY0080845	Great Oaks WWTF	McCracken	001-1	11/30/2017	pH	00400-1-0	Effluent Gross											6.5	SU	SU	N
KY0080845	Great Oaks WWTF	McCracken	001-1	10/31/2017	pH	00400-1-0	Effluent Gross							7.2	SU					SU	N
KY0080845	Great Oaks WWTF	McCracken	001-1	10/31/2017	pH	00400-1-0	Effluent Gross											7.2	SU	SU	N
KY0080845	Great Oaks WWTF	McCracken	001-1	09/30/2017	pH	00400-1-0	Effluent Gross							6.7	SU					SU	N
KY0080845	Great Oaks WWTF	McCracken	001-1	09/30/2017	pH	00400-1-0	Effluent Gross											6.7	SU	SU	N
KY0080845	Great Oaks WWTF	McCracken	001-1	08/31/2017	pH	00400-1-0	Effluent Gross							6.5	SU					SU	N
KY0080845	Great Oaks WWTF	McCracken	001-1	08/31/2017	pH	00400-1-0	Effluent Gross											6.5	SU	SU	N
KY0080845	Great Oaks WWTF	McCracken	001-1	07/31/2017	pH	00400-1-0	Effluent Gross							6.7	SU					SU	N
KY0080845	Great Oaks WWTF	McCracken	001-1	07/31/2017	pH	00400-1-0	Effluent Gross											6.7	SU	SU	N
KY0080845	Great Oaks WWTF	McCracken	001-1	06/30/2017	pH	00400-1-0	Effluent Gross							7.2	SU					SU	N
KY0080845	Great Oaks WWTF	McCracken	001-1	06/30/2017	pH	00400-1-0	Effluent Gross											7.2	SU	SU	N
KY0080845	Great Oaks WWTF	McCracken	001-1	05/31/2017	pH	00400-1-0	Effluent Gross							8.1	SU					SU	N

KY0080845	Great Oaks WWTF	McCracken	001-1	05/31/2017	pH	00400-1-0	Effluent Gross											8.1	SU	SU	N
KY0080845	Great Oaks WWTF	McCracken	001-1	04/30/2017	pH	00400-1-0	Effluent Gross							8.1	SU					SU	N
KY0080845	Great Oaks WWTF	McCracken	001-1	04/30/2017	pH	00400-1-0	Effluent Gross											8.1	SU	SU	N
KY0080845	Great Oaks WWTF	McCracken	001-1	03/31/2017	pH	00400-1-0	Effluent Gross							8.1	SU					SU	N
KY0080845	Great Oaks WWTF	McCracken	001-1	03/31/2017	pH	00400-1-0	Effluent Gross											8.1	SU	SU	N
KY0080845	Great Oaks WWTF	McCracken	001-1	02/28/2017	pH	00400-1-0	Effluent Gross							6.5	SU					SU	N
KY0080845	Great Oaks WWTF	McCracken	001-1	02/28/2017	pH	00400-1-0	Effluent Gross											6.5	SU	SU	N
KY0080845	Great Oaks WWTF	McCracken	001-1	01/31/2017	pH	00400-1-0	Effluent Gross							6.8	SU					SU	N
KY0080845	Great Oaks WWTF	McCracken	001-1	01/31/2017	pH	00400-1-0	Effluent Gross											6.8	SU	SU	N
KY0080845	Great Oaks WWTF	McCracken	001-1	12/31/2016	pH	00400-1-0	Effluent Gross							6.8	SU					SU	N
KY0080845	Great Oaks WWTF	McCracken	001-1	12/31/2016	pH	00400-1-0	Effluent Gross											6.8	SU	SU	N
KY0080845	Great Oaks WWTF	McCracken	001-1	11/30/2016	pH	00400-1-0	Effluent Gross							7.4	SU					SU	N
KY0080845	Great Oaks WWTF	McCracken	001-1	11/30/2016	pH	00400-1-0	Effluent Gross											7.4	SU	SU	N
KY0080845	Great Oaks WWTF	McCracken	001-1	10/31/2016	pH	00400-1-0	Effluent Gross							6.4	SU					SU	N
KY0080845	Great Oaks WWTF	McCracken	001-1	10/31/2016	pH	00400-1-0	Effluent Gross											6.4	SU	SU	N
KY0080845	Great Oaks WWTF	McCracken	001-1	09/30/2016	pH	00400-1-0	Effluent Gross							7.1	SU					SU	N
KY0080845	Great Oaks WWTF	McCracken	001-1	09/30/2016	pH	00400-1-0	Effluent Gross											7.1	SU	SU	N
KY0080845	Great Oaks WWTF	McCracken	001-1	08/31/2016	pH	00400-1-0	Effluent Gross							8.1	SU					SU	N
KY0080845	Great Oaks WWTF	McCracken	001-1	08/31/2016	pH	00400-1-0	Effluent Gross											8.1	SU	SU	N
KY0080845	Great Oaks WWTF	McCracken	001-1	07/31/2016	pH	00400-1-0	Effluent Gross							7.8	SU					SU	N
KY0080845	Great Oaks WWTF	McCracken	001-1	07/31/2016	pH	00400-1-0	Effluent Gross											7.8	SU	SU	N
KY0080845	Great Oaks WWTF	McCracken	001-1	06/30/2016	pH	00400-1-0	Effluent Gross							6.9	SU					SU	N
KY0080845	Great Oaks WWTF	McCracken	001-1	06/30/2016	pH	00400-1-0	Effluent Gross											6.9	SU	SU	N
KY0080845	Great Oaks WWTF	McCracken	001-1	05/31/2016	pH	00400-1-0	Effluent Gross							6.7	SU					SU	N
KY0080845	Great Oaks WWTF	McCracken	001-1	05/31/2016	pH	00400-1-0	Effluent Gross											6.7	SU	SU	N
KY0080845	Great Oaks WWTF	McCracken	001-1	04/30/2016	pH	00400-1-0	Effluent Gross							7.6	SU					SU	N
KY0080845	Great Oaks WWTF	McCracken	001-1	04/30/2016	pH	00400-1-0	Effluent Gross											7.6	SU	SU	N
KY0080845	Great Oaks WWTF	McCracken	001-1	03/31/2016	pH	00400-1-0	Effluent Gross							6.7	SU					SU	N
KY0080845	Great Oaks WWTF	McCracken	001-1	03/31/2016	pH	00400-1-0	Effluent Gross											6.7	SU	SU	N
KY0080845	Great Oaks WWTF	McCracken	001-1	02/29/2016	pH	00400-1-0	Effluent Gross							6.7	SU					SU	N
KY0080845	Great Oaks WWTF	McCracken	001-1	02/29/2016	pH	00400-1-0	Effluent Gross											6.7	SU	SU	N
KY0080845	Great Oaks WWTF	McCracken	001-1	01/31/2016	pH	00400-1-0	Effluent Gross							6.7	SU					SU	N
KY0080845	Great Oaks WWTF	McCracken	001-1	01/31/2016	pH	00400-1-0	Effluent Gross											6.7	SU	SU	N
KY0080845	Great Oaks WWTF	McCracken	001-1	12/31/2015	pH	00400-1-0	Effluent Gross							6.7	SU					SU	N
KY0080845	Great Oaks WWTF	McCracken	001-1	12/31/2015	pH	00400-1-0	Effluent Gross											6.7	SU	SU	N
KY0080845	Great Oaks WWTF	McCracken	001-1	11/30/2015	pH	00400-1-0	Effluent Gross							6.5	SU					SU	N
KY0080845	Great Oaks WWTF	McCracken	001-1	11/30/2015	pH	00400-1-0	Effluent Gross											6.5	SU	SU	N
KY0080845	Great Oaks WWTF	McCracken	001-1	10/31/2015	pH	00400-1-0	Effluent Gross							7.4	SU					SU	N
KY0080845	Great Oaks WWTF	McCracken	001-1	10/31/2015	pH	00400-1-0	Effluent Gross											7.4	SU	SU	N
KY0080845	Great Oaks WWTF	McCracken	001-1	09/30/2015	pH	00400-1-0	Effluent Gross							6.7	SU					SU	N
KY0080845	Great Oaks WWTF	McCracken	001-1	09/30/2015	pH	00400-1-0	Effluent Gross											6.7	SU	SU	N
KY0080845	Great Oaks WWTF	McCracken	001-1	08/31/2015	pH	00400-1-0	Effluent Gross							6.7	SU					SU	N
KY0080845	Great Oaks WWTF	McCracken	001-1	08/31/2015	pH	00400-1-0	Effluent Gross											6.7	SU	SU	N
KY0080845	Great Oaks WWTF	McCracken	001-1	07/31/2015	pH	00400-1-0	Effluent Gross							6.7	SU					SU	N
KY0080845	Great Oaks WWTF	McCracken	001-1	07/31/2015	pH	00400-1-0	Effluent Gross											6.7	SU	SU	N
KY0080845	Great Oaks WWTF	McCracken	001-1	06/30/2015	pH	00400-1-0	Effluent Gross							7.4	SU					SU	N
KY0080845	Great Oaks WWTF	McCracken	001-1	06/30/2015	pH	00400-1-0	Effluent Gross											7.4	SU	SU	N
KY0080845	Great Oaks WWTF	McCracken	001-1	05/31/2015	pH	00400-1-0	Effluent Gross							6.8	SU					SU	N
KY0080845	Great Oaks WWTF	McCracken	001-1	05/31/2015	pH	00400-1-0	Effluent Gross											6.8	SU	SU	N
KY0080845	Great Oaks WWTF	McCracken	001-1	04/30/2015	pH	00400-1-0	Effluent Gross							6.4	SU					SU	N
KY0080845	Great Oaks WWTF	McCracken	001-1	04/30/2015	pH	00400-1-0	Effluent Gross											6.4	SU	SU	N
KY0080845	Great Oaks WWTF	McCracken	001-1	03/31/2015	pH	00400-1-0	Effluent Gross							6.8	SU					SU	N
KY0080845	Great Oaks WWTF	McCracken	001-1	03/31/2015	pH	00400-1-0	Effluent Gross											6.8	SU	SU	N
KY0080845	Great Oaks WWTF	McCracken	001-1	02/28/2015	pH	00400-1-0	Effluent Gross							7.1	SU					SU	N
KY0080845	Great Oaks WWTF	McCracken	001-1	02/28/2015	pH	00400-1-0	Effluent Gross											7.1	SU	SU	N
KY0080845	Great Oaks WWTF	McCracken	001-1	01/31/2015	pH	00400-1-0	Effluent Gross							6.9	SU					SU	N
KY0080845	Great Oaks WWTF	McCracken	001-1	01/31/2015	pH	00400-1-0	Effluent Gross											6.9	SU	SU	N
KY0080845	Great Oaks WWTF	McCracken	001-1	12/31/2014	pH	00400-1-0	Effluent Gross							6.4	SU					SU	N
KY0080845	Great Oaks WWTF	McCracken	001-1	11/30/2014	pH	00400-1-0	Effluent Gross							7.12	SU					SU	N
KY0080845	Great Oaks WWTF	McCracken	001-1	11/30/2014	pH	00400-1-0	Effluent Gross											7.12	SU	SU	N
KY0080845	Great Oaks WWTF	McCracken	001-1	10/31/2014	pH	00400-1-0	Effluent Gross							6.5	SU					SU	N
KY0080845	Great Oaks WWTF	McCracken	001-1	10/31/2014	pH	00400-1-0	Effluent Gross											6.5	SU	SU	N
KY0080845	Great Oaks WWTF	McCracken	001-1	09/30/2019	Solids, total suspended	00530-1-0	Effluent Gross		1		1		lb/d								N
KY0080845	Great Oaks WWTF	McCracken	001-1	09/30/2019	Solids, total suspended	00530-1-0	Effluent Gross									3		3		mg/L	N
KY0080845	Great Oaks WWTF	McCracken	001-1	08/31/2019	Solids, total suspended	00530-1-0	Effluent Gross		3		3		lb/d								N
KY0080845	Great Oaks WWTF	McCracken	001-1	08/31/2019	Solids, total suspended	00530-1-0	Effluent Gross									11		11		mg/L	N
KY0080845	Great Oaks WWTF	McCracken	001-1	07/31/2019	Solids, total suspended	00530-1-0	Effluent Gross						lb/d								N
KY0080845	Great Oaks WWTF	McCracken	001-1	07/31/2019	Solids, total suspended	00530-1-0	Effluent Gross													mg/L	N
KY0080845	Great Oaks WWTF	McCracken	001-1	06/30/2019	Solids, total suspended	00530-1-0	Effluent Gross						lb/d								N
KY0080845	Great Oaks WWTF	McCracken	001-1	06/30/2019	Solids, total suspended	00530-1-0	Effluent Gross													mg/L	N
KY0080845	Great Oaks WWTF	McCracken	001-1	05/31/2019	Solids, total suspended	00530-1-0	Effluent Gross						lb/d								N
KY0080845	Great Oaks WWTF	McCracken	001-1	05/31/2019	Solids, total suspended	00530-1-0	Effluent Gross													mg/L	N
KY0080845	Great Oaks WWTF	McCracken	001-1	04/30/2019	Solids, total suspended	00530-1-0	Effluent Gross						lb/d								N
KY0080845	Great Oaks WWTF	McCracken	001-1	04/30/2019	Solids, total suspended	00530-1-0	Effluent Gross													mg/L	N
KY0080845	Great Oaks WWTF	McCracken	001-1	03/31/2019	Solids, total suspended	00530-1-0	Effluent Gross		2.335	lb/d			lb/d								N
KY0080845	Great Oaks WWTF	McCracken	001-1	03/31/2019	Solids, total suspended	00530-1-0	Effluent Gross				2.335	lb/d	lb/d								N
KY0080845	Great Oaks WWTF	McCracken	001-1	03/31/2019	Solids, total suspended	00530-1-0	Effluent Gross									8	mg/L			mg/L	N
KY0080845	Great Oaks WWTF	McCracken	001-1	03/31/2019	Solids, total suspended	00530-1-0	Effluent Gross											8	mg/L	mg/L	N
KY0080845	Great Oaks WWTF	McCracken	001-1	02/28/2019	Solids, total suspended	00530-1-0	Effluent Gross		1.459	lb/d			lb/d								N
KY0080845	Great Oaks WWTF	McCracken	001-1	02/28/2019	Solids, total suspended	00530-1-0	Effluent Gross				1.459	lb/d	lb/d								N
KY0080845	Great Oaks WWTF	McCracken	001-1	02/28/2019	Solids, total suspended	00530-1-0	Effluent Gross									5	mg/L			mg/L	N
KY0080845	Great Oaks WWTF	McCracken	001-1	02/28/2019	Solids, total suspended	00530-1-0	Effluent Gross											5	mg/L	mg/L	N
KY0080845	Great Oaks WWTF	McCracken	001-1	01/31/2019	Solids, total suspended	00530-1-0	Effluent Gross		9.257	lb/d			lb/d								N
KY0080845	Great Oaks WWTF	McCracken	001-1	01/31/2019	Solids, total suspended	00530-1-0	Effluent Gross				9.257	lb/d	lb/d								N
KY0080845	Great Oaks WWTF	McCracken	001-1	01/31/2019	Solids, total suspended	00530-1-0	Effluent Gross	23								37	mg/L			mg/L	Y
KY0080845	Great Oaks WWTF	McCracken	001-1	01/31/2019	Solids, total suspended	00530-1-0	Effluent Gross											37	mg/L	mg/L	N
KY0080845	Great Oaks WWTF	McCracken	001-1	12/31/2018	Solids, total suspended	00530-1-0	Effluent Gross		8.757	lb/d			lb/d								N
KY0080845	Great Oaks WWTF	McCracken	001-1	12/31/2018	Solids, total suspended	00530-1-0	Effluent Gross				8.757	lb/d	lb/d								N
KY0080845	Great Oaks WWTF	McCracken	001-1	12/31/2018	Solids, total suspended	00530-1-0	Effluent Gross									30	mg/L			mg/L	N
KY0080845	Great Oaks WWTF	McCracken	001-1	12/31/2018	Solids, total suspended	00530-1-0	Effluent Gross											30	mg/L	mg/L	N
KY0080845	Great Oaks WWTF	McCracken	001-1	11/30/2018	Solids, total suspended	00530-1-0	Effluent Gross		9.107	lb/d			lb/d								N
KY0080845	Great Oaks WWTF	McCracken	001-1	11/30/2018	Solids, total suspended	00530-1-0	Effluent Gross				9.107	lb/d	lb/d								N
KY0080845	Great Oaks WWTF	McCracken	001-1	11/30/2018	Solids, total suspended	00530-1-0	Effluent Gross	30								39	mg/L			mg/L	Y
KY0080845	Great Oaks WWTF	McCracken	001-1	11/30/2018	Solids, total suspended	00530-1-0	Effluent Gross											39	mg/L	mg/L	N
KY0080845	Great Oaks WWTF	McCracken	001-1	10/31/2018	Solids, total suspended	00530-1-0	Effluent Gross		0.9382	lb/d			lb/d								N
KY0080845	Great Oaks WWTF	McCracken	001-1	10/31/2018	Solids, total suspended	00530-1-0	Effluent Gross				0.9382	lb/d	lb/d								N
KY0080845	Great Oaks WWTF	McCracken	001-1	10/31/2018	Solids, total suspended	00530-1-0	Effluent Gross									3	mg/L			mg/L	N
KY0080845	Great Oaks WWTF	McCracken	001-1	10/31/2018	Solids, total suspended	00530-1-0	Effluent Gross											3	mg/L	mg/L	N
KY0080845	Great Oaks WWTF	McCracken	001-1	09/30/2018	Solids, total suspended	00530-1-0	Effluent Gross		1.626	lb/d			lb/d								N
KY0080845	Great Oaks WWTF	McCracken	001-1	09/30/2018	Solids, total suspended	00530-1-0	Effluent Gross				1.626	lb/d	lb/d								N
KY0080845	Great Oaks WWTF	McCracken	001-1	09/30/2018	Solids, total suspended	00530-1-0	Effluent Gross									3	mg/L			mg/L	N
KY0080845	Great Oaks WWTF	McCracken	001-1	09/30/2018	Solids, total suspended	00530-1-0	Effluent Gross											3	mg/L	mg/L	N
KY0080845	Great Oaks WWTF	McCracken	001-1	08/31/2018	Solids, total suspended	00530-1-0	Effluent Gross		1.634	lb/d			lb/d								N
KY0080845	Great Oaks WWTF	McCracken	001-1	08/31/2018	Solids, total suspended	00530-1-0	Effluent Gross				1.634	lb/d	lb/d								N
KY0080845	Great Oaks WWTF	McCracken	001-1	08/31/2018	Solids, total suspended	00530-1-0	Effluent Gross									7	mg/L			mg/L	N
KY0080845	Great Oaks WWTF	McCracken	001-1	08/31/2018	Solids, total suspended	00530-1-0	Effluent Gross											7	mg/L	mg/L	N
KY0080845	Great Oaks WWTF	McCracken	001-1	07/31/2018	Solids, total suspended	00530-1-0	Effluent Gross		1.042	lb/d			lb/d								N
KY0080845	Great Oaks WWTF	McCracken	001-1	07/31/2018	Solids, total suspended	00530-1-0	Effluent Gross				1.042	lb/d	lb/d								N
KY0080845	Great Oaks WWTF	McCracken	001-1	07/31/2018	Solids, total suspended	00530-1-0	Effluent Gross									5	mg/L			mg/L	N
KY0080845	Great Oaks WWTF	McCracken	001-1	07/31/2018	Solids, total suspended	00530-1-0	Effluent Gross											5	mg/L	mg/L	N
KY0080845	Great Oaks WWTF	McCracken	001-1	06/30/2018	Solids, total suspended	00530-1-0	Effluent Gross		1.042	lb/d			lb/d								N
KY0080845	Great Oaks WWTF	McCracken	001-1	06/30/2018	Solids, total suspended	00530-1-0	Effluent Gross				1.042	lb/d	lb/d								N
KY0080845	Great Oaks WWTF	McCracken	001-1	06/30/2018	Solids, total suspended	00530-1-0	Effluent Gross									5	mg/L			mg/L	N

KY0080845	Great Oaks WWTF	McCracken	001-1	06/30/2018	Solids, total suspended	00530-1-0	Effluent Gross											5	mg/L	mg/L	N
KY0080845	Great Oaks WWTF	McCracken	001-1	05/31/2018	Solids, total suspended	00530-1-0	Effluent Gross		1.751	lb/d			lb/d								N
KY0080845	Great Oaks WWTF	McCracken	001-1	05/31/2018	Solids, total suspended	00530-1-0	Effluent Gross				1.751	lb/d	lb/d								N
KY0080845	Great Oaks WWTF	McCracken	001-1	05/31/2018	Solids, total suspended	00530-1-0	Effluent Gross									7	mg/L			mg/L	N
KY0080845	Great Oaks WWTF	McCracken	001-1	05/31/2018	Solids, total suspended	00530-1-0	Effluent Gross											7	mg/L	mg/L	N
KY0080845	Great Oaks WWTF	McCracken	001-1	04/30/2018	Solids, total suspended	00530-1-0	Effluent Gross						lb/d								N
KY0080845	Great Oaks WWTF	McCracken	001-1	04/30/2018	Solids, total suspended	00530-1-0	Effluent Gross													mg/L	N
KY0080845	Great Oaks WWTF	McCracken	001-1	03/31/2018	Solids, total suspended	00530-1-0	Effluent Gross		12	lb/d			lb/d								N
KY0080845	Great Oaks WWTF	McCracken	001-1	03/31/2018	Solids, total suspended	00530-1-0	Effluent Gross				12	lb/d	lb/d								N
KY0080845	Great Oaks WWTF	McCracken	001-1	03/31/2018	Solids, total suspended	00530-1-0	Effluent Gross	60								48	mg/L			mg/L	Y
KY0080845	Great Oaks WWTF	McCracken	001-1	03/31/2018	Solids, total suspended	00530-1-0	Effluent Gross	7										48	mg/L	mg/L	Y
KY0080845	Great Oaks WWTF	McCracken	001-1	02/28/2018	Solids, total suspended	00530-1-0	Effluent Gross		2.126	lb/d			lb/d								N
KY0080845	Great Oaks WWTF	McCracken	001-1	02/28/2018	Solids, total suspended	00530-1-0	Effluent Gross				2.126	lb/d	lb/d								N
KY0080845	Great Oaks WWTF	McCracken	001-1	02/28/2018	Solids, total suspended	00530-1-0	Effluent Gross									5	mg/L			mg/L	N
KY0080845	Great Oaks WWTF	McCracken	001-1	02/28/2018	Solids, total suspended	00530-1-0	Effluent Gross											5	mg/L	mg/L	N
KY0080845	Great Oaks WWTF	McCracken	001-1	01/31/2018	Solids, total suspended	00530-1-0	Effluent Gross		11.28	lb/d			lb/d								N
KY0080845	Great Oaks WWTF	McCracken	001-1	01/31/2018	Solids, total suspended	00530-1-0	Effluent Gross				11.28	lb/d	lb/d								N
KY0080845	Great Oaks WWTF	McCracken	001-1	01/31/2018	Solids, total suspended	00530-1-0	Effluent Gross	37								41	mg/L			mg/L	Y
KY0080845	Great Oaks WWTF	McCracken	001-1	01/31/2018	Solids, total suspended	00530-1-0	Effluent Gross											41	mg/L	mg/L	N
KY0080845	Great Oaks WWTF	McCracken	001-1	12/31/2017	Solids, total suspended	00530-1-0	Effluent Gross		1.251	lb/d			lb/d								N
KY0080845	Great Oaks WWTF	McCracken	001-1	12/31/2017	Solids, total suspended	00530-1-0	Effluent Gross				1.251	lb/d	lb/d								N
KY0080845	Great Oaks WWTF	McCracken	001-1	12/31/2017	Solids, total suspended	00530-1-0	Effluent Gross									5	mg/L			mg/L	N
KY0080845	Great Oaks WWTF	McCracken	001-1	12/31/2017	Solids, total suspended	00530-1-0	Effluent Gross											5	mg/L	mg/L	N
KY0080845	Great Oaks WWTF	McCracken	001-1	11/30/2017	Solids, total suspended	00530-1-0	Effluent Gross		2.752	lb/d			lb/d								N
KY0080845	Great Oaks WWTF	McCracken	001-1	11/30/2017	Solids, total suspended	00530-1-0	Effluent Gross				2.752	lb/d	lb/d								N
KY0080845	Great Oaks WWTF	McCracken	001-1	11/30/2017	Solids, total suspended	00530-1-0	Effluent Gross									10	mg/L			mg/L	N
KY0080845	Great Oaks WWTF	McCracken	001-1	11/30/2017	Solids, total suspended	00530-1-0	Effluent Gross											10	mg/L	mg/L	N
KY0080845	Great Oaks WWTF	McCracken	001-1	10/31/2017	Solids, total suspended	00530-1-0	Effluent Gross		1.042	lb/d			lb/d								N
KY0080845	Great Oaks WWTF	McCracken	001-1	10/31/2017	Solids, total suspended	00530-1-0	Effluent Gross				1.042	lb/d	lb/d								N
KY0080845	Great Oaks WWTF	McCracken	001-1	10/31/2017	Solids, total suspended	00530-1-0	Effluent Gross									5	mg/L			mg/L	N
KY0080845	Great Oaks WWTF	McCracken	001-1	10/31/2017	Solids, total suspended	00530-1-0	Effluent Gross											5	mg/L	mg/L	N
KY0080845	Great Oaks WWTF	McCracken	001-1	09/30/2017	Solids, total suspended	00530-1-0	Effluent Gross		2.001	lb/d			lb/d								N
KY0080845	Great Oaks WWTF	McCracken	001-1	09/30/2017	Solids, total suspended	00530-1-0	Effluent Gross				2.001	lb/d	lb/d								N
KY0080845	Great Oaks WWTF	McCracken	001-1	09/30/2017	Solids, total suspended	00530-1-0	Effluent Gross									8	mg/L			mg/L	N
KY0080845	Great Oaks WWTF	McCracken	001-1	09/30/2017	Solids, total suspended	00530-1-0	Effluent Gross											8	mg/L	mg/L	N
KY0080845	Great Oaks WWTF	McCracken	001-1	08/31/2017	Solids, total suspended	00530-1-0	Effluent Gross		2.777	lb/d			lb/d								N
KY0080845	Great Oaks WWTF	McCracken	001-1	08/31/2017	Solids, total suspended	00530-1-0	Effluent Gross				2.777	lb/d	lb/d								N
KY0080845	Great Oaks WWTF	McCracken	001-1	08/31/2017	Solids, total suspended	00530-1-0	Effluent Gross									9	mg/L			mg/L	N
KY0080845	Great Oaks WWTF	McCracken	001-1	08/31/2017	Solids, total suspended	00530-1-0	Effluent Gross											9	mg/L	mg/L	N
KY0080845	Great Oaks WWTF	McCracken	001-1	07/31/2017	Solids, total suspended	00530-1-0	Effluent Gross		1.668	lb/d			lb/d								N
KY0080845	Great Oaks WWTF	McCracken	001-1	07/31/2017	Solids, total suspended	00530-1-0	Effluent Gross				1.668	lb/d	lb/d								N
KY0080845	Great Oaks WWTF	McCracken	001-1	07/31/2017	Solids, total suspended	00530-1-0	Effluent Gross									10	mg/L			mg/L	N
KY0080845	Great Oaks WWTF	McCracken	001-1	07/31/2017	Solids, total suspended	00530-1-0	Effluent Gross											10	mg/L	mg/L	N
KY0080845	Great Oaks WWTF	McCracken	001-1	06/30/2017	Solids, total suspended	00530-1-0	Effluent Gross		1.0425	lb/d			lb/d								N
KY0080845	Great Oaks WWTF	McCracken	001-1	06/30/2017	Solids, total suspended	00530-1-0	Effluent Gross				1.0425	lb/d	lb/d								N
KY0080845	Great Oaks WWTF	McCracken	001-1	06/30/2017	Solids, total suspended	00530-1-0	Effluent Gross									5	mg/L			mg/L	N
KY0080845	Great Oaks WWTF	McCracken	001-1	06/30/2017	Solids, total suspended	00530-1-0	Effluent Gross											5	mg/L	mg/L	N
KY0080845	Great Oaks WWTF	McCracken	001-1	05/31/2017	Solids, total suspended	00530-1-0	Effluent Gross		1.251	lb/d			lb/d								N
KY0080845	Great Oaks WWTF	McCracken	001-1	05/31/2017	Solids, total suspended	00530-1-0	Effluent Gross				1.251	lb/d	lb/d								N
KY0080845	Great Oaks WWTF	McCracken	001-1	05/31/2017	Solids, total suspended	00530-1-0	Effluent Gross									5	mg/L			mg/L	N
KY0080845	Great Oaks WWTF	McCracken	001-1	05/31/2017	Solids, total suspended	00530-1-0	Effluent Gross											5	mg/L	mg/L	N
KY0080845	Great Oaks WWTF	McCracken	001-1	04/30/2017	Solids, total suspended	00530-1-0	Effluent Gross		1.5429	lb/d			lb/d								N
KY0080845	Great Oaks WWTF	McCracken	001-1	04/30/2017	Solids, total suspended	00530-1-0	Effluent Gross				1.5429	lb/d	lb/d								N
KY0080845	Great Oaks WWTF	McCracken	001-1	04/30/2017	Solids, total suspended	00530-1-0	Effluent Gross									5	mg/L			mg/L	N
KY0080845	Great Oaks WWTF	McCracken	001-1	04/30/2017	Solids, total suspended	00530-1-0	Effluent Gross											5	mg/L	mg/L	N
KY0080845	Great Oaks WWTF	McCracken	001-1	03/31/2017	Solids, total suspended	00530-1-0	Effluent Gross		1.876	lb/d			lb/d								N
KY0080845	Great Oaks WWTF	McCracken	001-1	03/31/2017	Solids, total suspended	00530-1-0	Effluent Gross				1.876	lb/d	lb/d								N
KY0080845	Great Oaks WWTF	McCracken	001-1	03/31/2017	Solids, total suspended	00530-1-0	Effluent Gross									5	mg/L			mg/L	N
KY0080845	Great Oaks WWTF	McCracken	001-1	02/28/2017	Solids, total suspended	00530-1-0	Effluent Gross		1.251	lb/d			lb/d								N
KY0080845	Great Oaks WWTF	McCracken	001-1	02/28/2017	Solids, total suspended	00530-1-0	Effluent Gross				1.251	lb/d	lb/d								N
KY0080845	Great Oaks WWTF	McCracken	001-1	02/28/2017	Solids, total suspended	00530-1-0	Effluent Gross									5	mg/L			mg/L	N
KY0080845	Great Oaks WWTF	McCracken	001-1	02/28/2017	Solids, total suspended	00530-1-0	Effluent Gross											5	mg/L	mg/L	N
KY0080845	Great Oaks WWTF	McCracken	001-1	01/31/2017	Solids, total suspended	00530-1-0	Effluent Gross		1.459	lb/d			lb/d								N
KY0080845	Great Oaks WWTF	McCracken	001-1	01/31/2017	Solids, total suspended	00530-1-0	Effluent Gross				1.459	lb/d	lb/d								N
KY0080845	Great Oaks WWTF	McCracken	001-1	01/31/2017	Solids, total suspended	00530-1-0	Effluent Gross									5	mg/L			mg/L	N
KY0080845	Great Oaks WWTF	McCracken	001-1	01/31/2017	Solids, total suspended	00530-1-0	Effluent Gross											5	mg/L	mg/L	N
KY0080845	Great Oaks WWTF	McCracken	001-1	12/31/2016	Solids, total suspended	00530-1-0	Effluent Gross		1.125	lb/d			lb/d								N
KY0080845	Great Oaks WWTF	McCracken	001-1	12/31/2016	Solids, total suspended	00530-1-0	Effluent Gross				1.125	lb/d	lb/d								N
KY0080845	Great Oaks WWTF	McCracken	001-1	12/31/2016	Solids, total suspended	00530-1-0	Effluent Gross									5	mg/L			mg/L	N
KY0080845	Great Oaks WWTF	McCracken	001-1	12/31/2016	Solids, total suspended	00530-1-0	Effluent Gross											5	mg/L	mg/L	N
KY0080845	Great Oaks WWTF	McCracken	001-1	11/30/2016	Solids, total suspended	00530-1-0	Effluent Gross		2.085	lb/d			lb/d								N
KY0080845	Great Oaks WWTF	McCracken	001-1	11/30/2016	Solids, total suspended	00530-1-0	Effluent Gross				2.085	lb/d	lb/d								N
KY0080845	Great Oaks WWTF	McCracken	001-1	11/30/2016	Solids, total suspended	00530-1-0	Effluent Gross									5	mg/L			mg/L	N
KY0080845	Great Oaks WWTF	McCracken	001-1	11/30/2016	Solids, total suspended	00530-1-0	Effluent Gross											5	mg/L	mg/L	N
KY0080845	Great Oaks WWTF	McCracken	001-1	10/31/2016	Solids, total suspended	00530-1-0	Effluent Gross		1.459	lb/d			lb/d								N
KY0080845	Great Oaks WWTF	McCracken	001-1	10/31/2016	Solids, total suspended	00530-1-0	Effluent Gross				1.459	lb/d	lb/d								N
KY0080845	Great Oaks WWTF	McCracken	001-1	10/31/2016	Solids, total suspended	00530-1-0	Effluent Gross									5	mg/L			mg/L	N
KY0080845	Great Oaks WWTF	McCracken	001-1	10/31/2016	Solids, total suspended	00530-1-0	Effluent Gross											5	mg/L	mg/L	N
KY0080845	Great Oaks WWTF	McCracken	001-1	09/30/2016	Solids, total suspended	00530-1-0	Effluent Gross		1.459	lb/d			lb/d								N
KY0080845	Great Oaks WWTF	McCracken	001-1	09/30/2016	Solids, total suspended	00530-1-0	Effluent Gross				1.459	lb/d	lb/d								N
KY0080845	Great Oaks WWTF	McCracken	001-1	09/30/2016	Solids, total suspended	00530-1-0	Effluent Gross									5	mg/L			mg/L	N
KY0080845	Great Oaks WWTF	McCracken	001-1	09/30/2016	Solids, total suspended	00530-1-0	Effluent Gross											5	mg/L	mg/L	N
KY0080845	Great Oaks WWTF	McCracken	001-1	08/31/2016	Solids, total suspended	00530-1-0	Effluent Gross		1.042	lb/d			lb/d								N
KY0080845	Great Oaks WWTF	McCracken	001-1	08/31/2016	Solids, total suspended	00530-1-0	Effluent Gross				1.042	lb/d	lb/d								N
KY0080845	Great Oaks WWTF	McCracken	001-1	08/31/2016	Solids, total suspended	00530-1-0	Effluent Gross									5	mg/L			mg/L	N
KY0080845	Great Oaks WWTF	McCracken	001-1	08/31/2016	Solids, total suspended	00530-1-0	Effluent Gross											5	mg/L	mg/L	N
KY0080845	Great Oaks WWTF	McCracken	001-1	07/31/2016	Solids, total suspended	00530-1-0	Effluent Gross		3.21	lb/d			lb/d								N
KY0080845	Great Oaks WWTF	McCracken	001-1	07/31/2016	Solids, total suspended	00530-1-0	Effluent Gross				3.21	lb/d	lb/d								N
KY0080845	Great Oaks WWTF	McCracken	001-1	07/31/2016	Solids, total suspended	00530-1-0	Effluent Gross									7	mg/L			mg/L	N
KY0080845	Great Oaks WWTF	McCracken	001-1	07/31/2016	Solids, total suspended	00530-1-0	Effluent Gross											7	mg/L	mg/L	N
KY0080845	Great Oaks WWTF	McCracken	001-1	06/30/2016	Solids, total suspended	00530-1-0	Effluent Gross		1.459	lb/d			lb/d								N
KY0080845	Great Oaks WWTF	McCracken	001-1	06/30/2016	Solids, total suspended	00530-1-0	Effluent Gross				1.459	lb/d	lb/d								N
KY0080845	Great Oaks WWTF	McCracken	001-1	06/30/2016	Solids, total suspended	00530-1-0	Effluent Gross									5	mg/L			mg/L	N
KY0080845	Great Oaks WWTF	McCracken	001-1	06/30/2016	Solids, total suspended	00530-1-0	Effluent Gross											5	mg/L	mg/L	N
KY0080845	Great Oaks WWTF	McCracken	001-1	05/31/2016	Solids, total suspended	00530-1-0	Effluent Gross		1.668	lb/d			lb/d								N
KY0080845	Great Oaks WWTF	McCracken	001-1	05/31/2016	Solids, total suspended	00530-1-0	Effluent Gross				1.668	lb/d	lb/d								N
KY0080845	Great Oaks WWTF	McCracken	001-1	05/31/2016	Solids, total suspended	00530-1-0	Effluent Gross									5	mg/L			mg/L	N
KY0080845	Great Oaks WWTF	McCracken	001-1	05/31/2016	Solids, total suspended	00530-1-0	Effluent Gross											5	mg/L	mg/L	N
KY0080845	Great Oaks WWTF	McCracken	001-1	04/30/2016	Solids, total suspended	00530-1-0	Effluent Gross		2.085	lb/d			lb/d								N
KY0080845	Great Oaks WWTF	McCracken	001-1	04/30/2016	Solids, total suspended	00530-1-0	Effluent Gross				2.085	lb/d	lb/d								N
KY0080845	Great Oaks WWTF	McCracken	001-1	04/30/2016	Solids, total suspended	00530-1-0	Effluent Gross									5	mg/L			mg/L	N
KY0080845	Great Oaks WWTF	McCracken	001-1	04/30/2016	Solids, total suspended	00530-1-0	Effluent Gross											5	mg/L	mg/L	N
KY0080845	Great Oaks WWTF	McCracken	001-1	03/31/2016	Solids, total suspended	00530-1-0	Effluent Gross		2.085	lb/d			lb/d								N
KY0080845	Great Oaks WWTF	McCracken	001-1	03/31/2016	Solids, total suspended	00530-1-0	Effluent Gross				2.085	lb/d	lb/d								N
KY0080845	Great Oaks WWTF	McCracken	001-1	03/31/2016	Solids, total suspended	00530-1-0	Effluent Gross									5	mg/L			mg/L	N
KY0080845	Great Oaks WWTF	McCracken	001-1	03/31/2016	Solids, total suspended	00530-1-0	Effluent Gross											5	mg/L	mg/L	N
KY0080845	Great Oaks WWTF	McCracken	001-1	02/29/2016	Solids, total suspended	00530-1-0	Effluent Gross		5.004	lb/d			lb/d								N
KY0080845	Great Oaks WWTF	McCracken	001-1	02/29/2016	Solids, total suspended	00530-1-0	Effluent Gross				5.004	lb/d	lb/d								N
KY0080845	Great Oaks WWTF	McCracken	001-1	02/29/2016	Solids, total suspended	00530-1-0	Effluent Gross									15	mg/L			mg/L	N
KY0080845	Great Oaks WWTF	McCracken	001-1	02/29/2016	Solids, total suspended	00530-1-0	Effluent Gross											15	mg/L	mg/L	N
KY0080845	Great Oaks WWTF	McCracken	001-1	01/31/2016	Solids, total suspended	00530-1-0	Effluent Gross		1.042	lb/d			lb/d								N
KY0080845	Great Oaks WWTF	McCracken	001-1	01/31/2016	Solids, total suspended	00530-1-0	Effluent Gross				1.042	lb/d	lb/d								N
KY0080845	Great Oaks WWTF	McCracken	001-1	01/31/2016	Solids, total suspended	00530-1-0	Effluent Gross									5	mg/L			mg/L	N

KY0080845	Great Oaks WWTF	McCracken	001-1	01/31/2016	Solids, total suspended	00530-1-0	Effluent Gross											5	mg/L	mg/L	N
KY0080845	Great Oaks WWTF	McCracken	001-1	12/31/2015	Solids, total suspended	00530-1-0	Effluent Gross		1.668	lb/d			lb/d								N
KY0080845	Great Oaks WWTF	McCracken	001-1	12/31/2015	Solids, total suspended	00530-1-0	Effluent Gross				1.668	lb/d	lb/d								N
KY0080845	Great Oaks WWTF	McCracken	001-1	12/31/2015	Solids, total suspended	00530-1-0	Effluent Gross										5	mg/L		mg/L	N
KY0080845	Great Oaks WWTF	McCracken	001-1	12/31/2015	Solids, total suspended	00530-1-0	Effluent Gross												5	mg/L	mg/L	N
KY0080845	Great Oaks WWTF	McCracken	001-1	11/30/2015	Solids, total suspended	00530-1-0	Effluent Gross		1.376	lb/d			lb/d								N
KY0080845	Great Oaks WWTF	McCracken	001-1	11/30/2015	Solids, total suspended	00530-1-0	Effluent Gross				1.376	lb/d	lb/d								N
KY0080845	Great Oaks WWTF	McCracken	001-1	11/30/2015	Solids, total suspended	00530-1-0	Effluent Gross										5	mg/L		mg/L	N
KY0080845	Great Oaks WWTF	McCracken	001-1	11/30/2015	Solids, total suspended	00530-1-0	Effluent Gross												5	mg/L	mg/L	N
KY0080845	Great Oaks WWTF	McCracken	001-1	10/31/2015	Solids, total suspended	00530-1-0	Effluent Gross		1.751	lb/d			lb/d								N
KY0080845	Great Oaks WWTF	McCracken	001-1	10/31/2015	Solids, total suspended	00530-1-0	Effluent Gross				1.751	lb/d	lb/d								N
KY0080845	Great Oaks WWTF	McCracken	001-1	10/31/2015	Solids, total suspended	00530-1-0	Effluent Gross										5	mg/L		mg/L	N
KY0080845	Great Oaks WWTF	McCracken	001-1	10/31/2015	Solids, total suspended	00530-1-0	Effluent Gross												5	mg/L	mg/L	N
KY0080845	Great Oaks WWTF	McCracken	001-1	09/30/2015	Solids, total suspended	00530-1-0	Effluent Gross		2.1684	lb/d			lb/d								N
KY0080845	Great Oaks WWTF	McCracken	001-1	09/30/2015	Solids, total suspended	00530-1-0	Effluent Gross				2.1684	lb/d	lb/d								N
KY0080845	Great Oaks WWTF	McCracken	001-1	09/30/2015	Solids, total suspended	00530-1-0	Effluent Gross										5	mg/L		mg/L	N
KY0080845	Great Oaks WWTF	McCracken	001-1	09/30/2015	Solids, total suspended	00530-1-0	Effluent Gross												5	mg/L	mg/L	N
KY0080845	Great Oaks WWTF	McCracken	001-1	08/31/2015	Solids, total suspended	00530-1-0	Effluent Gross		6.672	lb/d			lb/d								N
KY0080845	Great Oaks WWTF	McCracken	001-1	08/31/2015	Solids, total suspended	00530-1-0	Effluent Gross				6.672	lb/d	lb/d								N
KY0080845	Great Oaks WWTF	McCracken	001-1	08/31/2015	Solids, total suspended	00530-1-0	Effluent Gross										25	mg/L		mg/L	N
KY0080845	Great Oaks WWTF	McCracken	001-1	08/31/2015	Solids, total suspended	00530-1-0	Effluent Gross												25	mg/L	mg/L	N
KY0080845	Great Oaks WWTF	McCracken	001-1	07/31/2015	Solids, total suspended	00530-1-0	Effluent Gross		1.251	lb/d			lb/d								N
KY0080845	Great Oaks WWTF	McCracken	001-1	07/31/2015	Solids, total suspended	00530-1-0	Effluent Gross				1.251	lb/d	lb/d								N
KY0080845	Great Oaks WWTF	McCracken	001-1	07/31/2015	Solids, total suspended	00530-1-0	Effluent Gross										5	mg/L		mg/L	N
KY0080845	Great Oaks WWTF	McCracken	001-1	07/31/2015	Solids, total suspended	00530-1-0	Effluent Gross												5	mg/L	mg/L	N
KY0080845	Great Oaks WWTF	McCracken	001-1	06/30/2015	Solids, total suspended	00530-1-0	Effluent Gross		1.459	lb/d			lb/d								N
KY0080845	Great Oaks WWTF	McCracken	001-1	06/30/2015	Solids, total suspended	00530-1-0	Effluent Gross				1.459	lb/d	lb/d								N
KY0080845	Great Oaks WWTF	McCracken	001-1	06/30/2015	Solids, total suspended	00530-1-0	Effluent Gross										5	mg/L		mg/L	N
KY0080845	Great Oaks WWTF	McCracken	001-1	06/30/2015	Solids, total suspended	00530-1-0	Effluent Gross												5	mg/L	mg/L	N
KY0080845	Great Oaks WWTF	McCracken	001-1	05/31/2015	Solids, total suspended	00530-1-0	Effluent Gross		0.7506	lb/d			lb/d								N
KY0080845	Great Oaks WWTF	McCracken	001-1	05/31/2015	Solids, total suspended	00530-1-0	Effluent Gross				0.7506	lb/d	lb/d								N
KY0080845	Great Oaks WWTF	McCracken	001-1	05/31/2015	Solids, total suspended	00530-1-0	Effluent Gross										5	mg/L		mg/L	N
KY0080845	Great Oaks WWTF	McCracken	001-1	05/31/2015	Solids, total suspended	00530-1-0	Effluent Gross												5	mg/L	mg/L	N
KY0080845	Great Oaks WWTF	McCracken	001-1	04/30/2015	Solids, total suspended	00530-1-0	Effluent Gross		1.668	lb/d			lb/d								N
KY0080845	Great Oaks WWTF	McCracken	001-1	04/30/2015	Solids, total suspended	00530-1-0	Effluent Gross				1.668	lb/d	lb/d								N
KY0080845	Great Oaks WWTF	McCracken	001-1	04/30/2015	Solids, total suspended	00530-1-0	Effluent Gross										5	mg/L		mg/L	N
KY0080845	Great Oaks WWTF	McCracken	001-1	04/30/2015	Solids, total suspended	00530-1-0	Effluent Gross												5	mg/L	mg/L	N
KY0080845	Great Oaks WWTF	McCracken	001-1	03/31/2015	Solids, total suspended	00530-1-0	Effluent Gross		1.751	lb/d			lb/d								N
KY0080845	Great Oaks WWTF	McCracken	001-1	03/31/2015	Solids, total suspended	00530-1-0	Effluent Gross				1.751	lb/d	lb/d								N
KY0080845	Great Oaks WWTF	McCracken	001-1	03/31/2015	Solids, total suspended	00530-1-0	Effluent Gross										5	mg/L		mg/L	N
KY0080845	Great Oaks WWTF	McCracken	001-1	03/31/2015	Solids, total suspended	00530-1-0	Effluent Gross												5	mg/L	mg/L	N
KY0080845	Great Oaks WWTF	McCracken	001-1	02/28/2015	Solids, total suspended	00530-1-0	Effluent Gross		1.459	lb/d			lb/d								N
KY0080845	Great Oaks WWTF	McCracken	001-1	02/28/2015	Solids, total suspended	00530-1-0	Effluent Gross				1.459	lb/d	lb/d								N
KY0080845	Great Oaks WWTF	McCracken	001-1	02/28/2015	Solids, total suspended	00530-1-0	Effluent Gross										5	mg/L		mg/L	N
KY0080845	Great Oaks WWTF	McCracken	001-1	02/28/2015	Solids, total suspended	00530-1-0	Effluent Gross												5	mg/L	mg/L	N
KY0080845	Great Oaks WWTF	McCracken	001-1	01/31/2015	Solids, total suspended	00530-1-0	Effluent Gross		1.709	lb/d			lb/d								N
KY0080845	Great Oaks WWTF	McCracken	001-1	01/31/2015	Solids, total suspended	00530-1-0	Effluent Gross				1.709	lb/d	lb/d								N
KY0080845	Great Oaks WWTF	McCracken	001-1	01/31/2015	Solids, total suspended	00530-1-0	Effluent Gross										5	mg/L		mg/L	N
KY0080845	Great Oaks WWTF	McCracken	001-1	01/31/2015	Solids, total suspended	00530-1-0	Effluent Gross												5	mg/L	mg/L	N
KY0080845	Great Oaks WWTF	McCracken	001-1	12/31/2014	Solids, total suspended	00530-1-0	Effluent Gross		1.751	lb/d			lb/d								N
KY0080845	Great Oaks WWTF	McCracken	001-1	12/31/2014	Solids, total suspended	00530-1-0	Effluent Gross				1.751	lb/d	lb/d								N
KY0080845	Great Oaks WWTF	McCracken	001-1	12/31/2014	Solids, total suspended	00530-1-0	Effluent Gross										5	mg/L		mg/L	N
KY0080845	Great Oaks WWTF	McCracken	001-1	12/31/2014	Solids, total suspended	00530-1-0	Effluent Gross												5	mg/L	mg/L	N
KY0080845	Great Oaks WWTF	McCracken	001-1	11/30/2014	Solids, total suspended	00530-1-0	Effluent Gross		1.751	lb/d			lb/d								N
KY0080845	Great Oaks WWTF	McCracken	001-1	11/30/2014	Solids, total suspended	00530-1-0	Effluent Gross				1.751	lb/d	lb/d								N
KY0080845	Great Oaks WWTF	McCracken	001-1	11/30/2014	Solids, total suspended	00530-1-0	Effluent Gross										6	mg/L		mg/L	N
KY0080845	Great Oaks WWTF	McCracken	001-1	11/30/2014	Solids, total suspended	00530-1-0	Effluent Gross												6	mg/L	mg/L	N
KY0080845	Great Oaks WWTF	McCracken	001-1	10/31/2014	Solids, total suspended	00530-1-0	Effluent Gross		1.334	lb/d			lb/d								N
KY0080845	Great Oaks WWTF	McCracken	001-1	10/31/2014	Solids, total suspended	00530-1-0	Effluent Gross				1.334	lb/d	lb/d				5	mg/L		mg/L	N
KY0080845	Great Oaks WWTF	McCracken	001-1	10/31/2014	Solids, total suspended	00530-1-0	Effluent Gross												5	mg/L	mg/L	N
KY0080845	Great Oaks WWTF	McCracken	001-1	09/30/2019	Nitrogen, ammonia total [as	00610-1-1	Effluent Gross		0.12		0.12		lb/d								N
KY0080845	Great Oaks WWTF	McCracken	001-1	09/30/2019	Nitrogen, ammonia total [as	00610-1-1	Effluent Gross										0.52		0.52		mg/L	N
KY0080845	Great Oaks WWTF	McCracken	001-1	08/31/2019	Nitrogen, ammonia total [as	00610-1-1	Effluent Gross	182	6.61		6.61		lb/d								Y
KY0080845	Great Oaks WWTF	McCracken	001-1	08/31/2019	Nitrogen, ammonia total [as	00610-1-1	Effluent Gross	563									26.5		26.5		mg/L	Y
KY0080845	Great Oaks WWTF	McCracken	001-1	07/31/2019	Nitrogen, ammonia total [as	00610-1-1	Effluent Gross						lb/d								N
KY0080845	Great Oaks WWTF	McCracken	001-1	07/31/2019	Nitrogen, ammonia total [as	00610-1-1	Effluent Gross													mg/L	N
KY0080845	Great Oaks WWTF	McCracken	001-1	06/30/2019	Nitrogen, ammonia total [as	00610-1-1	Effluent Gross						lb/d								N
KY0080845	Great Oaks WWTF	McCracken	001-1	06/30/2019	Nitrogen, ammonia total [as	00610-1-1	Effluent Gross													mg/L	N
KY0080845	Great Oaks WWTF	McCracken	001-1	05/31/2019	Nitrogen, ammonia total [as	00610-1-1	Effluent Gross						lb/d								N
KY0080845	Great Oaks WWTF	McCracken	001-1	05/31/2019	Nitrogen, ammonia total [as	00610-1-1	Effluent Gross													mg/L	N
KY0080845	Great Oaks WWTF	McCracken	001-1	10/31/2018	Nitrogen, ammonia total [as	00610-1-1	Effluent Gross		0.0781	lb/d			lb/d								N
KY0080845	Great Oaks WWTF	McCracken	001-1	10/31/2018	Nitrogen, ammonia total [as	00610-1-1	Effluent Gross				0.0781	lb/d	lb/d								N
KY0080845	Great Oaks WWTF	McCracken	001-1	10/31/2018	Nitrogen, ammonia total [as	00610-1-1	Effluent Gross										0.25	mg/L		mg/L	N
KY0080845	Great Oaks WWTF	McCracken	001-1	10/31/2018	Nitrogen, ammonia total [as	00610-1-1	Effluent Gross												0.25	mg/L	mg/L	N
KY0080845	Great Oaks WWTF	McCracken	001-1	09/30/2018	Nitrogen, ammonia total [as	00610-1-1	Effluent Gross		0.1355	lb/d			lb/d								N
KY0080845	Great Oaks WWTF	McCracken	001-1	09/30/2018	Nitrogen, ammonia total [as	00610-1-1	Effluent Gross				0.1355	lb/d	lb/d								N
KY0080845	Great Oaks WWTF	McCracken	001-1	09/30/2018	Nitrogen, ammonia total [as	00610-1-1	Effluent Gross										0.25	mg/L		mg/L	N
KY0080845	Great Oaks WWTF	McCracken	001-1	09/30/2018	Nitrogen, ammonia total [as	00610-1-1	Effluent Gross												0.25	mg/L	mg/L	N
KY0080845	Great Oaks WWTF	McCracken	001-1	08/31/2018	Nitrogen, ammonia total [as	00610-1-1	Effluent Gross	139	5.604	lb/d			lb/d								Y
KY0080845	Great Oaks WWTF	McCracken	001-1	08/31/2018	Nitrogen, ammonia total [as	00610-1-1	Effluent Gross	60			5.604	lb/d	lb/d								Y
KY0080845	Great Oaks WWTF	McCracken	001-1	08/31/2018	Nitrogen, ammonia total [as	00610-1-1	Effluent Gross	500									24	mg/L		mg/L	Y
KY0080845	Great Oaks WWTF	McCracken	001-1	08/31/2018	Nitrogen, ammonia total [as	00610-1-1	Effluent Gross	300											24	mg/L	mg/L	Y
KY0080845	Great Oaks WWTF	McCracken	001-1	07/31/2018	Nitrogen, ammonia total [as	00610-1-1	Effluent Gross	87	4.378	lb/d			lb/d								Y
KY0080845	Great Oaks WWTF	McCracken	001-1	07/31/2018	Nitrogen, ammonia total [as	00610-1-1	Effluent Gross	25			4.378	lb/d	lb/d								Y
KY0080845	Great Oaks WWTF	McCracken	001-1	07/31/2018	Nitrogen, ammonia total [as	00610-1-1	Effluent Gross	425									21	mg/L		mg/L	Y
KY0080845	Great Oaks WWTF	McCracken	001-1	07/31/2018	Nitrogen, ammonia total [as	00610-1-1	Effluent Gross	250											21	mg/L	mg/L	Y
KY0080845	Great Oaks WWTF	McCracken	001-1	06/30/2018	Nitrogen, ammonia total [as	00610-1-1	Effluent Gross		0.0521	lb/d			lb/d								N
KY0080845	Great Oaks WWTF	McCracken	001-1	06/30/2018	Nitrogen, ammonia total [as	00610-1-1	Effluent Gross				0.0521	lb/d	lb/d								N
KY0080845	Great Oaks WWTF	McCracken	001-1	06/30/2018	Nitrogen, ammonia total [as	00610-1-1	Effluent Gross										0.25	mg/L		mg/L	N
KY0080845	Great Oaks WWTF	McCracken	001-1	06/30/2018	Nitrogen, ammonia total [as	00610-1-1	Effluent Gross												0.25	mg/L	mg/L	N
KY0080845	Great Oaks WWTF	McCracken	001-1	05/31/2018	Nitrogen, ammonia total [as	00610-1-1	Effluent Gross	82	4.253	lb/d			lb/d								Y
KY0080845	Great Oaks WWTF	McCracken	001-1	05/31/2018	Nitrogen, ammonia total [as	00610-1-1	Effluent Gross	22			4.253	lb/d	lb/d								Y
KY0080845	Great Oaks WWTF	McCracken	001-1	05/31/2018	Nitrogen, ammonia total [as	00610-1-1	Effluent Gross	325									17	mg/L		mg/L	Y
KY0080845	Great Oaks WWTF	McCracken	001-1	05/31/2018	Nitrogen, ammonia total [as	00610-1-1	Effluent Gross	183											17	mg/L	mg/L	Y
KY0080845	Great Oaks WWTF	McCracken	001-1	10/31/2017	Nitrogen, ammonia total [as	00610-1-1	Effluent Gross		0.417	lb/d			lb/d								N
KY0080845	Great Oaks WWTF	McCracken	001-1	10/31/2017	Nitrogen, ammonia total [as	00610-1-1	Effluent Gross				0.417	lb/d	lb/d								N
KY0080845	Great Oaks WWTF	McCracken	001-1	10/31/2017	Nitrogen, ammonia total [as	00610-1-1	Effluent Gross										2	mg/L		mg/L	N
KY0080845	Great Oaks WWTF	McCracken	001-1	10/31/2017	Nitrogen, ammonia total [as	00610-1-1	Effluent Gross												2	mg/L	mg/L	N
KY0080845	Great Oaks WWTF	McCracken	001-1	09/30/2017	Nitrogen, ammonia total [as	00610-1-1	Effluent Gross		0.0625	lb/d			lb/d								N
KY0080845	Great Oaks WWTF	McCracken	001-1	09/30/2017	Nitrogen, ammonia total [as	00610-1-1	Effluent Gross				0.0625	lb/d	lb/d								N
KY0080845	Great Oaks WWTF	McCracken	001-1	09/30/2017	Nitrogen, ammonia total [as	00610-1-1	Effluent Gross										0.25	mg/L		mg/L	N
KY0080845	Great Oaks WWTF	McCracken	001-1	09/30/2017	Nitrogen, ammonia total [as	00610-1-1	Effluent Gross												0.25	mg/L	mg/L	N
KY0080845	Great Oaks WWTF	McCracken	001-1	08/31/2017	Nitrogen, ammonia total [as	00610-1-1	Effluent Gross		0.0771	lb/d			lb/d								N
KY0080845	Great Oaks WWTF	McCracken	001-1	08/31/2017	Nitrogen, ammonia total [as	00610-1-1	Effluent Gross				0.0771	lb/d	lb/d								N
KY0080845	Great Oaks WWTF	McCracken	001-1	08/31/2017	Nitrogen, ammonia total [as	00610-1-1	Effluent Gross										0.25	mg/L		mg/L	N
KY0080845	Great Oaks WWTF	McCracken	001-1	08/31/2017	Nitrogen, ammonia total [as	00610-1-1	Effluent Gross												0.25	mg/L	mg/L	N
KY0080845	Great Oaks WWTF	McCracken	001-1	07/31/2017	Nitrogen, ammonia total [as	00610-1-1	Effluent Gross		0.5337	lb/d			lb/d								N
KY0080845	Great Oaks WWTF	McCracken	001-1	07/31/2017	Nitrogen, ammonia total [as	00610-1-1	Effluent Gross				0.5337	lb/d	lb/d								N
KY0080845	Great Oaks WWTF	McCracken	001-1	07/31/2017	Nitrogen, ammonia total [as	00610-1-1	Effluent Gross										3.2	mg/L		mg/L	N
KY0080845	Great Oaks WWTF	McCracken	001-1	07/31/2017	Nitrogen, ammonia total [as	00610-1-1	Effluent Gross												3.2	mg/L	mg/L	N
KY0080845	Great Oaks WWTF	McCracken	001-1	06/30/2017	Nitrogen, ammonia total [as	00610-1-1	Effluent Gross		0.1939	lb/d			lb/d								N
KY0080845	Great Oaks WWTF	McCracken	001-1	06/30/2017	Nitrogen, ammonia total [as	00610-1-1	Effluent Gross				0.1939	lb/d	lb/d								N
KY0080845	Great Oaks WWTF	McCracken	001-1	06/30/2017	Nitrogen, ammonia total [as	00610-1-1	Effluent Gross										0.93	mg/L		mg/L	N

KY0080845	Great Oaks WWTF	McCracken	001-1	06/30/2017	Nitrogen, ammonia total [as	00610-1-1	Effluent Gross											0.93	mg/L	mg/L	N
KY0080845	Great Oaks WWTF	McCracken	001-1	05/31/2017	Nitrogen, ammonia total [as	00610-1-1	Effluent Gross		0.0625	lb/d			lb/d								N
KY0080845	Great Oaks WWTF	McCracken	001-1	05/31/2017	Nitrogen, ammonia total [as	00610-1-1	Effluent Gross				0.0625	lb/d	lb/d								N
KY0080845	Great Oaks WWTF	McCracken	001-1	05/31/2017	Nitrogen, ammonia total [as	00610-1-1	Effluent Gross									0.25	mg/L			mg/L	N
KY0080845	Great Oaks WWTF	McCracken	001-1	05/31/2017	Nitrogen, ammonia total [as	00610-1-1	Effluent Gross											0.25	mg/L	mg/L	N
KY0080845	Great Oaks WWTF	McCracken	001-1	10/31/2016	Nitrogen, ammonia total [as	00610-1-1	Effluent Gross		0.0729	lb/d			lb/d								N
KY0080845	Great Oaks WWTF	McCracken	001-1	10/31/2016	Nitrogen, ammonia total [as	00610-1-1	Effluent Gross				0.0729	lb/d	lb/d								N
KY0080845	Great Oaks WWTF	McCracken	001-1	10/31/2016	Nitrogen, ammonia total [as	00610-1-1	Effluent Gross									0.25	mg/L			mg/L	N
KY0080845	Great Oaks WWTF	McCracken	001-1	10/31/2016	Nitrogen, ammonia total [as	00610-1-1	Effluent Gross											0.25	mg/L	mg/L	N
KY0080845	Great Oaks WWTF	McCracken	001-1	09/30/2016	Nitrogen, ammonia total [as	00610-1-1	Effluent Gross		0.0729	lb/d			lb/d								N
KY0080845	Great Oaks WWTF	McCracken	001-1	09/30/2016	Nitrogen, ammonia total [as	00610-1-1	Effluent Gross				0.0729	lb/d	lb/d								N
KY0080845	Great Oaks WWTF	McCracken	001-1	09/30/2016	Nitrogen, ammonia total [as	00610-1-1	Effluent Gross									0.25	mg/L			mg/L	N
KY0080845	Great Oaks WWTF	McCracken	001-1	09/30/2016	Nitrogen, ammonia total [as	00610-1-1	Effluent Gross											0.25	mg/L	mg/L	N
KY0080845	Great Oaks WWTF	McCracken	001-1	08/31/2016	Nitrogen, ammonia total [as	00610-1-1	Effluent Gross		0.0521	lb/d			lb/d								N
KY0080845	Great Oaks WWTF	McCracken	001-1	08/31/2016	Nitrogen, ammonia total [as	00610-1-1	Effluent Gross				0.0521	lb/d	lb/d								N
KY0080845	Great Oaks WWTF	McCracken	001-1	08/31/2016	Nitrogen, ammonia total [as	00610-1-1	Effluent Gross									0.25	mg/L			mg/L	N
KY0080845	Great Oaks WWTF	McCracken	001-1	08/31/2016	Nitrogen, ammonia total [as	00610-1-1	Effluent Gross											0.25	mg/L	mg/L	N
KY0080845	Great Oaks WWTF	McCracken	001-1	07/31/2016	Nitrogen, ammonia total [as	00610-1-1	Effluent Gross		1.1	lb/d			lb/d								N
KY0080845	Great Oaks WWTF	McCracken	001-1	07/31/2016	Nitrogen, ammonia total [as	00610-1-1	Effluent Gross				1.1	lb/d	lb/d								N
KY0080845	Great Oaks WWTF	McCracken	001-1	07/31/2016	Nitrogen, ammonia total [as	00610-1-1	Effluent Gross									2.4	mg/L			mg/L	N
KY0080845	Great Oaks WWTF	McCracken	001-1	07/31/2016	Nitrogen, ammonia total [as	00610-1-1	Effluent Gross											2.4	mg/L	mg/L	N
KY0080845	Great Oaks WWTF	McCracken	001-1	06/30/2016	Nitrogen, ammonia total [as	00610-1-1	Effluent Gross		0.0729	lb/d			lb/d								N
KY0080845	Great Oaks WWTF	McCracken	001-1	06/30/2016	Nitrogen, ammonia total [as	00610-1-1	Effluent Gross				0.0729	lb/d	lb/d								N
KY0080845	Great Oaks WWTF	McCracken	001-1	06/30/2016	Nitrogen, ammonia total [as	00610-1-1	Effluent Gross									0.25	mg/L			mg/L	N
KY0080845	Great Oaks WWTF	McCracken	001-1	06/30/2016	Nitrogen, ammonia total [as	00610-1-1	Effluent Gross											0.25	mg/L	mg/L	N
KY0080845	Great Oaks WWTF	McCracken	001-1	05/31/2016	Nitrogen, ammonia total [as	00610-1-1	Effluent Gross		0.0834	lb/d			lb/d								N
KY0080845	Great Oaks WWTF	McCracken	001-1	05/31/2016	Nitrogen, ammonia total [as	00610-1-1	Effluent Gross				0.0834	lb/d	lb/d								N
KY0080845	Great Oaks WWTF	McCracken	001-1	05/31/2016	Nitrogen, ammonia total [as	00610-1-1	Effluent Gross									0.25	mg/L			mg/L	N
KY0080845	Great Oaks WWTF	McCracken	001-1	05/31/2016	Nitrogen, ammonia total [as	00610-1-1	Effluent Gross											0.25	mg/L	mg/L	N
KY0080845	Great Oaks WWTF	McCracken	001-1	10/31/2015	Nitrogen, ammonia total [as	00610-1-1	Effluent Gross		0.0875	lb/d			lb/d								N
KY0080845	Great Oaks WWTF	McCracken	001-1	10/31/2015	Nitrogen, ammonia total [as	00610-1-1	Effluent Gross				0.0875	lb/d	lb/d								N
KY0080845	Great Oaks WWTF	McCracken	001-1	10/31/2015	Nitrogen, ammonia total [as	00610-1-1	Effluent Gross									0.25	mg/L			mg/L	N
KY0080845	Great Oaks WWTF	McCracken	001-1	10/31/2015	Nitrogen, ammonia total [as	00610-1-1	Effluent Gross											0.25	mg/L	mg/L	N
KY0080845	Great Oaks WWTF	McCracken	001-1	09/30/2015	Nitrogen, ammonia total [as	00610-1-1	Effluent Gross		0.10842	lb/d			lb/d								N
KY0080845	Great Oaks WWTF	McCracken	001-1	09/30/2015	Nitrogen, ammonia total [as	00610-1-1	Effluent Gross				0.10842	lb/d	lb/d								N
KY0080845	Great Oaks WWTF	McCracken	001-1	09/30/2015	Nitrogen, ammonia total [as	00610-1-1	Effluent Gross									0.25	mg/L			mg/L	N
KY0080845	Great Oaks WWTF	McCracken	001-1	09/30/2015	Nitrogen, ammonia total [as	00610-1-1	Effluent Gross											0.25	mg/L	mg/L	N
KY0080845	Great Oaks WWTF	McCracken	001-1	08/31/2015	Nitrogen, ammonia total [as	00610-1-1	Effluent Gross		0.072	lb/d			lb/d								N
KY0080845	Great Oaks WWTF	McCracken	001-1	08/31/2015	Nitrogen, ammonia total [as	00610-1-1	Effluent Gross				0.072	lb/d	lb/d								N
KY0080845	Great Oaks WWTF	McCracken	001-1	08/31/2015	Nitrogen, ammonia total [as	00610-1-1	Effluent Gross									0.027	mg/L			mg/L	N
KY0080845	Great Oaks WWTF	McCracken	001-1	08/31/2015	Nitrogen, ammonia total [as	00610-1-1	Effluent Gross											0.027	mg/L	mg/L	N
KY0080845	Great Oaks WWTF	McCracken	001-1	07/31/2015	Nitrogen, ammonia total [as	00610-1-1	Effluent Gross		1.926	lb/d			lb/d								N
KY0080845	Great Oaks WWTF	McCracken	001-1	07/31/2015	Nitrogen, ammonia total [as	00610-1-1	Effluent Gross				1.926	lb/d	lb/d								N
KY0080845	Great Oaks WWTF	McCracken	001-1	07/31/2015	Nitrogen, ammonia total [as	00610-1-1	Effluent Gross	93								7.7	mg/L			mg/L	Y
KY0080845	Great Oaks WWTF	McCracken	001-1	07/31/2015	Nitrogen, ammonia total [as	00610-1-1	Effluent Gross	28										7.7	mg/L	mg/L	Y
KY0080845	Great Oaks WWTF	McCracken	001-1	06/30/2015	Nitrogen, ammonia total [as	00610-1-1	Effluent Gross		0.0729	lb/d			lb/d								N
KY0080845	Great Oaks WWTF	McCracken	001-1	06/30/2015	Nitrogen, ammonia total [as	00610-1-1	Effluent Gross				0.0729	lb/d	lb/d								N
KY0080845	Great Oaks WWTF	McCracken	001-1	06/30/2015	Nitrogen, ammonia total [as	00610-1-1	Effluent Gross									0.25	mg/L			mg/L	N
KY0080845	Great Oaks WWTF	McCracken	001-1	06/30/2015	Nitrogen, ammonia total [as	00610-1-1	Effluent Gross											0.25	mg/L	mg/L	N
KY0080845	Great Oaks WWTF	McCracken	001-1	05/31/2015	Nitrogen, ammonia total [as	00610-1-1	Effluent Gross		0.2101	lb/d			lb/d								N
KY0080845	Great Oaks WWTF	McCracken	001-1	05/31/2015	Nitrogen, ammonia total [as	00610-1-1	Effluent Gross				0.2101	lb/d	lb/d								N
KY0080845	Great Oaks WWTF	McCracken	001-1	05/31/2015	Nitrogen, ammonia total [as	00610-1-1	Effluent Gross									1.4	mg/L			mg/L	N
KY0080845	Great Oaks WWTF	McCracken	001-1	05/31/2015	Nitrogen, ammonia total [as	00610-1-1	Effluent Gross											1.4	mg/L	mg/L	N
KY0080845	Great Oaks WWTF	McCracken	001-1	10/31/2014	Nitrogen, ammonia total [as	00610-1-1	Effluent Gross		0.0667	lb/d			lb/d								N
KY0080845	Great Oaks WWTF	McCracken	001-1	10/31/2014	Nitrogen, ammonia total [as	00610-1-1	Effluent Gross				0.0667	lb/d	lb/d								N
KY0080845	Great Oaks WWTF	McCracken	001-1	10/31/2014	Nitrogen, ammonia total [as	00610-1-1	Effluent Gross									0.25	mg/L			mg/L	N
KY0080845	Great Oaks WWTF	McCracken	001-1	10/31/2014	Nitrogen, ammonia total [as	00610-1-1	Effluent Gross											0.25	mg/L	mg/L	N
KY0080845	Great Oaks WWTF	McCracken	001-1	04/30/2019	Nitrogen, ammonia total [as	00610-1-2	Effluent Gross						lb/d								N
KY0080845	Great Oaks WWTF	McCracken	001-1	04/30/2019	Nitrogen, ammonia total [as	00610-1-2	Effluent Gross													mg/L	N
KY0080845	Great Oaks WWTF	McCracken	001-1	03/31/2019	Nitrogen, ammonia total [as	00610-1-2	Effluent Gross		2.218	lb/d			lb/d								N
KY0080845	Great Oaks WWTF	McCracken	001-1	03/31/2019	Nitrogen, ammonia total [as	00610-1-2	Effluent Gross				2.218	lb/d	lb/d								N
KY0080845	Great Oaks WWTF	McCracken	001-1	03/31/2019	Nitrogen, ammonia total [as	00610-1-2	Effluent Gross									7.6	mg/L			mg/L	N
KY0080845	Great Oaks WWTF	McCracken	001-1	03/31/2019	Nitrogen, ammonia total [as	00610-1-2	Effluent Gross											7.6	mg/L	mg/L	N
KY0080845	Great Oaks WWTF	McCracken	001-1	02/28/2019	Nitrogen, ammonia total [as	00610-1-2	Effluent Gross		0.0729	lb/d			lb/d								N
KY0080845	Great Oaks WWTF	McCracken	001-1	02/28/2019	Nitrogen, ammonia total [as	00610-1-2	Effluent Gross				0.0729	lb/d	lb/d								N
KY0080845	Great Oaks WWTF	McCracken	001-1	02/28/2019	Nitrogen, ammonia total [as	00610-1-2	Effluent Gross									0.25	mg/L			mg/L	N
KY0080845	Great Oaks WWTF	McCracken	001-1	02/28/2019	Nitrogen, ammonia total [as	00610-1-2	Effluent Gross											0.25	mg/L	mg/L	N
KY0080845	Great Oaks WWTF	McCracken	001-1	01/31/2019	Nitrogen, ammonia total [as	00610-1-2	Effluent Gross		3.502	lb/d			lb/d								N
KY0080845	Great Oaks WWTF	McCracken	001-1	01/31/2019	Nitrogen, ammonia total [as	00610-1-2	Effluent Gross				3.502	lb/d	lb/d								N
KY0080845	Great Oaks WWTF	McCracken	001-1	01/31/2019	Nitrogen, ammonia total [as	00610-1-2	Effluent Gross	40								14	mg/L			mg/L	Y
KY0080845	Great Oaks WWTF	McCracken	001-1	01/31/2019	Nitrogen, ammonia total [as	00610-1-2	Effluent Gross											14	mg/L	mg/L	N
KY0080845	Great Oaks WWTF	McCracken	001-1	12/31/2018	Nitrogen, ammonia total [as	00610-1-2	Effluent Gross		5.254	lb/d			lb/d								N
KY0080845	Great Oaks WWTF	McCracken	001-1	12/31/2018	Nitrogen, ammonia total [as	00610-1-2	Effluent Gross				5.254	lb/d	lb/d								N
KY0080845	Great Oaks WWTF	McCracken	001-1	12/31/2018	Nitrogen, ammonia total [as	00610-1-2	Effluent Gross	80								18	mg/L			mg/L	Y
KY0080845	Great Oaks WWTF	McCracken	001-1	12/31/2018	Nitrogen, ammonia total [as	00610-1-2	Effluent Gross	20										18	mg/L	mg/L	Y
KY0080845	Great Oaks WWTF	McCracken	001-1	11/30/2018	Nitrogen, ammonia total [as	00610-1-2	Effluent Gross		1.611	lb/d			lb/d								N
KY0080845	Great Oaks WWTF	McCracken	001-1	11/30/2018	Nitrogen, ammonia total [as	00610-1-2	Effluent Gross				1.611	lb/d	lb/d								N
KY0080845	Great Oaks WWTF	McCracken	001-1	11/30/2018	Nitrogen, ammonia total [as	00610-1-2	Effluent Gross									6.9	mg/L			mg/L	N
KY0080845	Great Oaks WWTF	McCracken	001-1	11/30/2018	Nitrogen, ammonia total [as	00610-1-2	Effluent Gross											6.9	mg/L	mg/L	N
KY0080845	Great Oaks WWTF	McCracken	001-1	04/30/2018	Nitrogen, ammonia total [as	00610-1-2	Effluent Gross						lb/d								N
KY0080845	Great Oaks WWTF	McCracken	001-1	04/30/2018	Nitrogen, ammonia total [as	00610-1-2	Effluent Gross													mg/L	N
KY0080845	Great Oaks WWTF	McCracken	001-1	03/31/2018	Nitrogen, ammonia total [as	00610-1-2	Effluent Gross		4.753	lb/d			lb/d								N
KY0080845	Great Oaks WWTF	McCracken	001-1	03/31/2018	Nitrogen, ammonia total [as	00610-1-2	Effluent Gross				4.753	lb/d	lb/d								N
KY0080845	Great Oaks WWTF	McCracken	001-1	03/31/2018	Nitrogen, ammonia total [as	00610-1-2	Effluent Gross	90								19	mg/L			mg/L	Y
KY0080845	Great Oaks WWTF	McCracken	001-1	03/31/2018	Nitrogen, ammonia total [as	00610-1-2	Effluent Gross	27										19	mg/L	mg/L	Y
KY0080845	Great Oaks WWTF	McCracken	001-1	02/28/2018	Nitrogen, ammonia total [as	00610-1-2	Effluent Gross		0.1063	lb/d			lb/d								N
KY0080845	Great Oaks WWTF	McCracken	001-1	02/28/2018	Nitrogen, ammonia total [as	00610-1-2	Effluent Gross				0.1063	lb/d	lb/d								N
KY0080845	Great Oaks WWTF	McCracken	001-1	02/28/2018	Nitrogen, ammonia total [as	00610-1-2	Effluent Gross									0.25	mg/L			mg/L	N
KY0080845	Great Oaks WWTF	McCracken	001-1	02/28/2018	Nitrogen, ammonia total [as	00610-1-2	Effluent Gross											0.25	mg/L	mg/L	N
KY0080845	Great Oaks WWTF	McCracken	001-1	01/31/2018	Nitrogen, ammonia total [as	00610-1-2	Effluent Gross		0.0688	lb/d			lb/d								N
KY0080845	Great Oaks WWTF	McCracken	001-1	01/31/2018	Nitrogen, ammonia total [as	00610-1-2	Effluent Gross				0.0688	lb/d	lb/d								N
KY0080845	Great Oaks WWTF	McCracken	001-1	01/31/2018	Nitrogen, ammonia total [as	00610-1-2	Effluent Gross									0.25	mg/L			mg/L	N
KY0080845	Great Oaks WWTF	McCracken	001-1	01/31/2018	Nitrogen, ammonia total [as	00610-1-2	Effluent Gross											0.25	mg/L	mg/L	N
KY0080845	Great Oaks WWTF	McCracken	001-1	12/31/2017	Nitrogen, ammonia total [as	00610-1-2	Effluent Gross		0.3753	lb/d			lb/d								N
KY0080845	Great Oaks WWTF	McCracken	001-1	12/31/2017	Nitrogen, ammonia total [as	00610-1-2	Effluent Gross				0.3753	lb/d	lb/d								N
KY0080845	Great Oaks WWTF	McCracken	001-1	12/31/2017	Nitrogen, ammonia total [as	00610-1-2	Effluent Gross									1.5	mg/L			mg/L	N
KY0080845	Great Oaks WWTF	McCracken	001-1	12/31/2017	Nitrogen, ammonia total [as	00610-1-2	Effluent Gross											1.5	mg/L	mg/L	N
KY0080845	Great Oaks WWTF	McCracken	001-1	11/30/2017	Nitrogen, ammonia total [as	00610-1-2	Effluent Gross		5.506	lb/d			lb/d								N
KY0080845	Great Oaks WWTF	McCracken	001-1	11/30/2017	Nitrogen, ammonia total [as	00610-1-2	Effluent Gross				5.506	lb/d	lb/d								N
KY0080845	Great Oaks WWTF	McCracken	001-1	11/30/2017	Nitrogen, ammonia total [as	00610-1-2	Effluent Gross	100								20	mg/L			mg/L	Y
KY0080845	Great Oaks WWTF	McCracken	001-1	11/30/2017	Nitrogen, ammonia total [as	00610-1-2	Effluent Gross	33										20	mg/L	mg/L	Y
KY0080845	Great Oaks WWTF	McCracken	001-1	04/30/2017	Nitrogen, ammonia total [as	00610-1-2	Effluent Gross		0.0771	lb/d			lb/d								N
KY0080845	Great Oaks WWTF	McCracken	001-1	04/30/2017	Nitrogen, ammonia total [as	00610-1-2	Effluent Gross				0.0771	lb/d	lb/d								N
KY0080845	Great Oaks WWTF	McCracken	001-1	04/30/2017	Nitrogen, ammonia total [as	00610-1-2	Effluent Gross									0.25	mg/L			mg/L	N
KY0080845	Great Oaks WWTF	McCracken	001-1	04/30/2017	Nitrogen, ammonia total [as	00610-1-2	Effluent Gross											0.25	mg/L	mg/L	N
KY0080845	Great Oaks WWTF	McCracken	001-1	03/31/2017	Nitrogen, ammonia total [as	00610-1-2	Effluent Gross		0.0938	lb/d			lb/d								N
KY0080845	Great Oaks WWTF	McCracken	001-1	03/31/2017	Nitrogen, ammonia total [as	00610-1-2	Effluent Gross				0.0938	lb/d	lb/d								N
KY0080845	Great Oaks WWTF	McCracken	001-1	03/31/2017	Nitrogen, ammonia total [as	00610-1-2	Effluent Gross									0.25	mg/L			mg/L	N
KY0080845	Great Oaks WWTF	McCracken	001-1	03/31/2017	Nitrogen, ammonia total [as	00610-1-2	Effluent Gross											0.25	mg/L	mg/L	N
KY0080845	Great Oaks WWTF	McCracken	001-1	02/28/2017	Nitrogen, ammonia total [as	00610-1-2	Effluent Gross		0.0625	lb/d			lb/d								N
KY0080845	Great Oaks WWTF	McCracken	001-1	02/28/2017	Nitrogen, ammonia total [as	00610-1-2	Effluent Gross				0.0625	lb/d	lb/d								N
KY0080845	Great Oaks WWTF	McCracken	001-1	02/28/2017	Nitrogen, ammonia total [as	00610-1-2	Effluent Gross									0.25	mg/L			mg/L	N
KY0080845	Great Oaks WWTF	McCracken	001-1	02/28/2017	Nitrogen, ammonia total [as	00610-1-2	Effluent Gross											0.25	mg/L	mg/L	N
KY0080845	Great Oaks WWTF	McCracken	001-1	01/31/2017	Nitrogen, ammonia total [as	00610-1-2	Effluent Gross		0.0729	lb/d			lb/d								N

KY0080845	Great Oaks WWTF	McCracken	001-1	01/31/2017	Nitrogen, ammonia total [as	00610-1-2	Effluent Gross				0.0729	lb/d	lb/d								N
KY0080845	Great Oaks WWTF	McCracken	001-1	01/31/2017	Nitrogen, ammonia total [as	00610-1-2	Effluent Gross									0.25	mg/L			mg/L	N
KY0080845	Great Oaks WWTF	McCracken	001-1	01/31/2017	Nitrogen, ammonia total [as	00610-1-2	Effluent Gross											0.25	mg/L	mg/L	N
KY0080845	Great Oaks WWTF	McCracken	001-1	12/31/2016	Nitrogen, ammonia total [as	00610-1-2	Effluent Gross		0.0562	lb/d			lb/d								N
KY0080845	Great Oaks WWTF	McCracken	001-1	12/31/2016	Nitrogen, ammonia total [as	00610-1-2	Effluent Gross				0.0562	lb/d	lb/d								N
KY0080845	Great Oaks WWTF	McCracken	001-1	12/31/2016	Nitrogen, ammonia total [as	00610-1-2	Effluent Gross									0.25	mg/L			mg/L	N
KY0080845	Great Oaks WWTF	McCracken	001-1	12/31/2016	Nitrogen, ammonia total [as	00610-1-2	Effluent Gross											0.25	mg/L	mg/L	N
KY0080845	Great Oaks WWTF	McCracken	001-1	11/30/2016	Nitrogen, ammonia total [as	00610-1-2	Effluent Gross		0.1042	lb/d			lb/d								N
KY0080845	Great Oaks WWTF	McCracken	001-1	11/30/2016	Nitrogen, ammonia total [as	00610-1-2	Effluent Gross				0.1042	lb/d	lb/d								N
KY0080845	Great Oaks WWTF	McCracken	001-1	11/30/2016	Nitrogen, ammonia total [as	00610-1-2	Effluent Gross									0.25	mg/L			mg/L	N
KY0080845	Great Oaks WWTF	McCracken	001-1	11/30/2016	Nitrogen, ammonia total [as	00610-1-2	Effluent Gross											0.25	mg/L	mg/L	N
KY0080845	Great Oaks WWTF	McCracken	001-1	04/30/2016	Nitrogen, ammonia total [as	00610-1-2	Effluent Gross		0.1042	lb/d			lb/d								N
KY0080845	Great Oaks WWTF	McCracken	001-1	04/30/2016	Nitrogen, ammonia total [as	00610-1-2	Effluent Gross				0.1042	lb/d	lb/d								N
KY0080845	Great Oaks WWTF	McCracken	001-1	04/30/2016	Nitrogen, ammonia total [as	00610-1-2	Effluent Gross									0.25	mg/L			mg/L	N
KY0080845	Great Oaks WWTF	McCracken	001-1	04/30/2016	Nitrogen, ammonia total [as	00610-1-2	Effluent Gross											0.25	mg/L	mg/L	N
KY0080845	Great Oaks WWTF	McCracken	001-1	03/31/2016	Nitrogen, ammonia total [as	00610-1-2	Effluent Gross		0.1042	lb/d			lb/d								N
KY0080845	Great Oaks WWTF	McCracken	001-1	03/31/2016	Nitrogen, ammonia total [as	00610-1-2	Effluent Gross				0.1042	lb/d	lb/d								N
KY0080845	Great Oaks WWTF	McCracken	001-1	03/31/2016	Nitrogen, ammonia total [as	00610-1-2	Effluent Gross									0.25	mg/L			mg/L	N
KY0080845	Great Oaks WWTF	McCracken	001-1	03/31/2016	Nitrogen, ammonia total [as	00610-1-2	Effluent Gross											0.25	mg/L	mg/L	N
KY0080845	Great Oaks WWTF	McCracken	001-1	02/29/2016	Nitrogen, ammonia total [as	00610-1-2	Effluent Gross		0.7672	lb/d			lb/d								N
KY0080845	Great Oaks WWTF	McCracken	001-1	02/29/2016	Nitrogen, ammonia total [as	00610-1-2	Effluent Gross				0.7672	lb/d	lb/d								N
KY0080845	Great Oaks WWTF	McCracken	001-1	02/29/2016	Nitrogen, ammonia total [as	00610-1-2	Effluent Gross									2.3	mg/L			mg/L	N
KY0080845	Great Oaks WWTF	McCracken	001-1	02/29/2016	Nitrogen, ammonia total [as	00610-1-2	Effluent Gross											2.3	mg/L	mg/L	N
KY0080845	Great Oaks WWTF	McCracken	001-1	01/31/2016	Nitrogen, ammonia total [as	00610-1-2	Effluent Gross		0.0521	lb/d			lb/d								N
KY0080845	Great Oaks WWTF	McCracken	001-1	01/31/2016	Nitrogen, ammonia total [as	00610-1-2	Effluent Gross				0.0521	lb/d	lb/d								N
KY0080845	Great Oaks WWTF	McCracken	001-1	01/31/2016	Nitrogen, ammonia total [as	00610-1-2	Effluent Gross									0.25	mg/L			mg/L	N
KY0080845	Great Oaks WWTF	McCracken	001-1	01/31/2016	Nitrogen, ammonia total [as	00610-1-2	Effluent Gross											0.25	mg/L	mg/L	N
KY0080845	Great Oaks WWTF	McCracken	001-1	12/31/2015	Nitrogen, ammonia total [as	00610-1-2	Effluent Gross		0.0834	lb/d			lb/d								N
KY0080845	Great Oaks WWTF	McCracken	001-1	12/31/2015	Nitrogen, ammonia total [as	00610-1-2	Effluent Gross				0.0834	lb/d	lb/d								N
KY0080845	Great Oaks WWTF	McCracken	001-1	12/31/2015	Nitrogen, ammonia total [as	00610-1-2	Effluent Gross									0.25	mg/L			mg/L	N
KY0080845	Great Oaks WWTF	McCracken	001-1	12/31/2015	Nitrogen, ammonia total [as	00610-1-2	Effluent Gross											0.25	mg/L	mg/L	N
KY0080845	Great Oaks WWTF	McCracken	001-1	11/30/2015	Nitrogen, ammonia total [as	00610-1-2	Effluent Gross		0.0688	lb/d			lb/d								N
KY0080845	Great Oaks WWTF	McCracken	001-1	11/30/2015	Nitrogen, ammonia total [as	00610-1-2	Effluent Gross				0.0688	lb/d	lb/d								N
KY0080845	Great Oaks WWTF	McCracken	001-1	11/30/2015	Nitrogen, ammonia total [as	00610-1-2	Effluent Gross									0.25	mg/L			mg/L	N
KY0080845	Great Oaks WWTF	McCracken	001-1	11/30/2015	Nitrogen, ammonia total [as	00610-1-2	Effluent Gross											0.25	mg/L	mg/L	N
KY0080845	Great Oaks WWTF	McCracken	001-1	04/30/2015	Nitrogen, ammonia total [as	00610-1-2	Effluent Gross		0.0834	lb/d			lb/d								N
KY0080845	Great Oaks WWTF	McCracken	001-1	04/30/2015	Nitrogen, ammonia total [as	00610-1-2	Effluent Gross				0.0834	lb/d	lb/d								N
KY0080845	Great Oaks WWTF	McCracken	001-1	04/30/2015	Nitrogen, ammonia total [as	00610-1-2	Effluent Gross									0.25	mg/L			mg/L	N
KY0080845	Great Oaks WWTF	McCracken	001-1	04/30/2015	Nitrogen, ammonia total [as	00610-1-2	Effluent Gross											0.25	mg/L	mg/L	N
KY0080845	Great Oaks WWTF	McCracken	001-1	03/31/2015	Nitrogen, ammonia total [as	00610-1-2	Effluent Gross		0.0875	lb/d			lb/d								N
KY0080845	Great Oaks WWTF	McCracken	001-1	03/31/2015	Nitrogen, ammonia total [as	00610-1-2	Effluent Gross				0.0875	lb/d	lb/d								N
KY0080845	Great Oaks WWTF	McCracken	001-1	03/31/2015	Nitrogen, ammonia total [as	00610-1-2	Effluent Gross									0.25	mg/L			mg/L	N
KY0080845	Great Oaks WWTF	McCracken	001-1	03/31/2015	Nitrogen, ammonia total [as	00610-1-2	Effluent Gross											0.25	mg/L	mg/L	N
KY0080845	Great Oaks WWTF	McCracken	001-1	02/28/2015	Nitrogen, ammonia total [as	00610-1-2	Effluent Gross		0.0729	lb/d			lb/d								N
KY0080845	Great Oaks WWTF	McCracken	001-1	02/28/2015	Nitrogen, ammonia total [as	00610-1-2	Effluent Gross				0.0729	lb/d	lb/d								N
KY0080845	Great Oaks WWTF	McCracken	001-1	02/28/2015	Nitrogen, ammonia total [as	00610-1-2	Effluent Gross									0.25	mg/L			mg/L	N
KY0080845	Great Oaks WWTF	McCracken	001-1	02/28/2015	Nitrogen, ammonia total [as	00610-1-2	Effluent Gross											0.25	mg/L	mg/L	N
KY0080845	Great Oaks WWTF	McCracken	001-1	01/31/2015	Nitrogen, ammonia total [as	00610-1-2	Effluent Gross		0.0854	lb/d			lb/d								N
KY0080845	Great Oaks WWTF	McCracken	001-1	01/31/2015	Nitrogen, ammonia total [as	00610-1-2	Effluent Gross				0.0854	lb/d	lb/d								N
KY0080845	Great Oaks WWTF	McCracken	001-1	01/31/2015	Nitrogen, ammonia total [as	00610-1-2	Effluent Gross									0.25	mg/L			mg/L	N
KY0080845	Great Oaks WWTF	McCracken	001-1	01/31/2015	Nitrogen, ammonia total [as	00610-1-2	Effluent Gross											0.25	mg/L	mg/L	N
KY0080845	Great Oaks WWTF	McCracken	001-1	12/31/2014	Nitrogen, ammonia total [as	00610-1-2	Effluent Gross		0.0875	lb/d			lb/d								N
KY0080845	Great Oaks WWTF	McCracken	001-1	12/31/2014	Nitrogen, ammonia total [as	00610-1-2	Effluent Gross				0.0875	lb/d	lb/d								N
KY0080845	Great Oaks WWTF	McCracken	001-1	12/31/2014	Nitrogen, ammonia total [as	00610-1-2	Effluent Gross									0.25	mg/L			mg/L	N
KY0080845	Great Oaks WWTF	McCracken	001-1	12/31/2014	Nitrogen, ammonia total [as	00610-1-2	Effluent Gross											0.25	mg/L	mg/L	N
KY0080845	Great Oaks WWTF	McCracken	001-1	11/30/2014	Nitrogen, ammonia total [as	00610-1-2	Effluent Gross		0.0729	lb/d			lb/d								N
KY0080845	Great Oaks WWTF	McCracken	001-1	11/30/2014	Nitrogen, ammonia total [as	00610-1-2	Effluent Gross				0.0729	lb/d	lb/d								N
KY0080845	Great Oaks WWTF	McCracken	001-1	11/30/2014	Nitrogen, ammonia total [as	00610-1-2	Effluent Gross									0.25	mg/L			mg/L	N
KY0080845	Great Oaks WWTF	McCracken	001-1	11/30/2014	Nitrogen, ammonia total [as	00610-1-2	Effluent Gross											0.25	mg/L	mg/L	N
KY0080845	Great Oaks WWTF	McCracken	001-1	09/30/2019	Flow, in conduit or thru	50050-1-0	Effluent Gross		0.027		0.032		MGD								N
KY0080845	Great Oaks WWTF	McCracken	001-1	08/31/2019	Flow, in conduit or thru	50050-1-0	Effluent Gross		0.0299		0.0299		MGD								N
KY0080845	Great Oaks WWTF	McCracken	001-1	07/31/2019	Flow, in conduit or thru	50050-1-0	Effluent Gross						MGD								N
KY0080845	Great Oaks WWTF	McCracken	001-1	06/30/2019	Flow, in conduit or thru	50050-1-0	Effluent Gross						MGD								N
KY0080845	Great Oaks WWTF	McCracken	001-1	05/31/2019	Flow, in conduit or thru	50050-1-0	Effluent Gross						MGD								N
KY0080845	Great Oaks WWTF	McCracken	001-1	04/30/2019	Flow, in conduit or thru	50050-1-0	Effluent Gross						MGD								N
KY0080845	Great Oaks WWTF	McCracken	001-1	03/31/2019	Flow, in conduit or thru	50050-1-0	Effluent Gross		0.035	MGD			MGD								N
KY0080845	Great Oaks WWTF	McCracken	001-1	03/31/2019	Flow, in conduit or thru	50050-1-0	Effluent Gross				0.035	MGD	MGD								N
KY0080845	Great Oaks WWTF	McCracken	001-1	02/28/2019	Flow, in conduit or thru	50050-1-0	Effluent Gross		0.035	MGD			MGD								N
KY0080845	Great Oaks WWTF	McCracken	001-1	02/28/2019	Flow, in conduit or thru	50050-1-0	Effluent Gross				0.035	MGD	MGD								N
KY0080845	Great Oaks WWTF	McCracken	001-1	01/31/2019	Flow, in conduit or thru	50050-1-0	Effluent Gross		0.03	MGD			MGD								N
KY0080845	Great Oaks WWTF	McCracken	001-1	01/31/2019	Flow, in conduit or thru	50050-1-0	Effluent Gross				0.03	MGD	MGD								N
KY0080845	Great Oaks WWTF	McCracken	001-1	12/31/2018	Flow, in conduit or thru	50050-1-0	Effluent Gross		0.035	MGD			MGD								N
KY0080845	Great Oaks WWTF	McCracken	001-1	12/31/2018	Flow, in conduit or thru	50050-1-0	Effluent Gross				0.035	MGD	MGD								N
KY0080845	Great Oaks WWTF	McCracken	001-1	11/30/2018	Flow, in conduit or thru	50050-1-0	Effluent Gross		0.028	MGD			MGD								N
KY0080845	Great Oaks WWTF	McCracken	001-1	11/30/2018	Flow, in conduit or thru	50050-1-0	Effluent Gross				0.028	MGD	MGD								N
KY0080845	Great Oaks WWTF	McCracken	001-1	10/31/2018	Flow, in conduit or thru	50050-1-0	Effluent Gross		0.0375	MGD			MGD								N
KY0080845	Great Oaks WWTF	McCracken	001-1	10/31/2018	Flow, in conduit or thru	50050-1-0	Effluent Gross				0.0375	MGD	MGD								N
KY0080845	Great Oaks WWTF	McCracken	001-1	09/30/2018	Flow, in conduit or thru	50050-1-0	Effluent Gross		0.065	MGD			MGD								N
KY0080845	Great Oaks WWTF	McCracken	001-1	09/30/2018	Flow, in conduit or thru	50050-1-0	Effluent Gross				0.065	MGD	MGD								N
KY0080845	Great Oaks WWTF	McCracken	001-1	08/31/2018	Flow, in conduit or thru	50050-1-0	Effluent Gross		0.028	MGD			MGD								N
KY0080845	Great Oaks WWTF	McCracken	001-1	08/31/2018	Flow, in conduit or thru	50050-1-0	Effluent Gross				0.028	MGD	MGD								N
KY0080845	Great Oaks WWTF	McCracken	001-1	07/31/2018	Flow, in conduit or thru	50050-1-0	Effluent Gross		0.025	MGD			MGD								N
KY0080845	Great Oaks WWTF	McCracken	001-1	07/31/2018	Flow, in conduit or thru	50050-1-0	Effluent Gross				0.025	MGD	MGD								N
KY0080845	Great Oaks WWTF	McCracken	001-1	06/30/2018	Flow, in conduit or thru	50050-1-0	Effluent Gross		0.025	MGD			MGD								N
KY0080845	Great Oaks WWTF	McCracken	001-1	06/30/2018	Flow, in conduit or thru	50050-1-0	Effluent Gross				0.025	MGD	MGD								N
KY0080845	Great Oaks WWTF	McCracken	001-1	05/31/2018	Flow, in conduit or thru	50050-1-0	Effluent Gross		0.03	MGD			MGD								N
KY0080845	Great Oaks WWTF	McCracken	001-1	05/31/2018	Flow, in conduit or thru	50050-1-0	Effluent Gross				0.03	MGD	MGD								N
KY0080845	Great Oaks WWTF	McCracken	001-1	04/30/2018	Flow, in conduit or thru	50050-1-0	Effluent Gross						MGD								N
KY0080845	Great Oaks WWTF	McCracken	001-1	03/31/2018	Flow, in conduit or thru	50050-1-0	Effluent Gross		0.03	MGD			MGD								N
KY0080845	Great Oaks WWTF	McCracken	001-1	03/31/2018	Flow, in conduit or thru	50050-1-0	Effluent Gross				0.03	MGD	MGD								N
KY0080845	Great Oaks WWTF	McCracken	001-1	02/28/2018	Flow, in conduit or thru	50050-1-0	Effluent Gross		0.051	MGD			MGD								N
KY0080845	Great Oaks WWTF	McCracken	001-1	02/28/2018	Flow, in conduit or thru	50050-1-0	Effluent Gross				0.051	MGD	MGD								N
KY0080845	Great Oaks WWTF	McCracken	001-1	01/31/2018	Flow, in conduit or thru	50050-1-0	Effluent Gross		0.033	MGD			MGD								N
KY0080845	Great Oaks WWTF	McCracken	001-1	01/31/2018	Flow, in conduit or thru	50050-1-0	Effluent Gross				0.033	MGD	MGD								N
KY0080845	Great Oaks WWTF	McCracken	001-1	12/31/2017	Flow, in conduit or thru	50050-1-0	Effluent Gross		0.03	MGD			MGD								N
KY0080845	Great Oaks WWTF	McCracken	001-1	12/31/2017	Flow, in conduit or thru	50050-1-0	Effluent Gross				0.03	MGD	MGD								N
KY0080845	Great Oaks WWTF	McCracken	001-1	11/30/2017	Flow, in conduit or thru	50050-1-0	Effluent Gross		0.033	MGD			MGD								N
KY0080845	Great Oaks WWTF	McCracken	001-1	11/30/2017	Flow, in conduit or thru	50050-1-0	Effluent Gross				0.033	MGD	MGD								N
KY0080845	Great Oaks WWTF	McCracken	001-1	10/31/2017	Flow, in conduit or thru	50050-1-0	Effluent Gross		0.025	MGD			MGD								N
KY0080845	Great Oaks WWTF	McCracken	001-1	10/31/2017	Flow, in conduit or thru	50050-1-0	Effluent Gross				0.025	MGD	MGD								N
KY0080845	Great Oaks WWTF	McCracken	001-1	09/30/2017	Flow, in conduit or thru	50050-1-0	Effluent Gross		0.03	MGD			MGD								N
KY0080845	Great Oaks WWTF	McCracken	001-1	09/30/2017	Flow, in conduit or thru	50050-1-0	Effluent Gross				0.03	MGD	MGD								N
KY0080845	Great Oaks WWTF	McCracken	001-1	08/31/2017	Flow, in conduit or thru	50050-1-0	Effluent Gross		0.037	MGD			MGD								N
KY0080845	Great Oaks WWTF	McCracken	001-1	08/31/2017	Flow, in conduit or thru	50050-1-0	Effluent Gross				0.037	MGD	MGD								N
KY0080845	Great Oaks WWTF	McCracken	001-1	07/31/2017	Flow, in conduit or thru	50050-1-0	Effluent Gross		0.02	MGD			MGD								N
KY0080845	Great Oaks WWTF	McCracken	001-1	07/31/2017	Flow, in conduit or thru	50050-1-0	Effluent Gross				0.02	MGD	MGD								N
KY0080845	Great Oaks WWTF	McCracken	001-1	06/30/2017	Flow, in conduit or thru	50050-1-0	Effluent Gross		0.025	MGD			MGD								N
KY0080845	Great Oaks WWTF	McCracken	001-1	06/30/2017	Flow, in conduit or thru	50050-1-0	Effluent Gross				0.025	MGD	MGD								N
KY0080845	Great Oaks WWTF	McCracken	001-1	05/31/2017	Flow, in conduit or thru	50050-1-0	Effluent Gross		0.03	MGD			MGD								N
KY0080845	Great Oaks WWTF	McCracken	001-1	05/31/2017	Flow, in conduit or thru	50050-1-0	Effluent Gross				0.03	MGD	MGD								N
KY0080845	Great Oaks WWTF	McCracken	001-1	04/30/2017	Flow, in conduit or thru	50050-1-0	Effluent Gross		0.037	MGD			MGD								N
KY0080845	Great Oaks WWTF	McCracken	001-1	04/30/2017	Flow, in conduit or thru	50050-1-0	Effluent Gross				0.037	MGD	MGD								N
KY0080845	Great Oaks WWTF	McCracken	001-1	03/31/2017	Flow, in conduit or thru	50050-1-0	Effluent Gross		0.045	MGD			MGD								N
KY0080845	Great Oaks WWTF	McCracken	001-1	03/31/2017	Flow, in conduit or thru	50050-1-0	Effluent Gross				0.045	MGD	MGD								N

KY0080845	Great Oaks WWTF	McCracken	001-1	02/28/2017	Flow, in conduit or thru	50050-1-0	Effluent Gross		0.03	MGD			MGD								N
KY0080845	Great Oaks WWTF	McCracken	001-1	02/28/2017	Flow, in conduit or thru	50050-1-0	Effluent Gross				0.03	MGD	MGD								N
KY0080845	Great Oaks WWTF	McCracken	001-1	01/31/2017	Flow, in conduit or thru	50050-1-0	Effluent Gross		0.035	MGD			MGD								N
KY0080845	Great Oaks WWTF	McCracken	001-1	01/31/2017	Flow, in conduit or thru	50050-1-0	Effluent Gross				0.035	MGD	MGD								N
KY0080845	Great Oaks WWTF	McCracken	001-1	12/31/2016	Flow, in conduit or thru	50050-1-0	Effluent Gross		0.027	MGD			MGD								N
KY0080845	Great Oaks WWTF	McCracken	001-1	12/31/2016	Flow, in conduit or thru	50050-1-0	Effluent Gross				0.027	MGD	MGD								N
KY0080845	Great Oaks WWTF	McCracken	001-1	11/30/2016	Flow, in conduit or thru	50050-1-0	Effluent Gross		0.05	MGD			MGD								N
KY0080845	Great Oaks WWTF	McCracken	001-1	11/30/2016	Flow, in conduit or thru	50050-1-0	Effluent Gross				0.05	MGD	MGD								N
KY0080845	Great Oaks WWTF	McCracken	001-1	10/31/2016	Flow, in conduit or thru	50050-1-0	Effluent Gross		0.035	MGD			MGD								N
KY0080845	Great Oaks WWTF	McCracken	001-1	10/31/2016	Flow, in conduit or thru	50050-1-0	Effluent Gross				0.035	MGD	MGD								N
KY0080845	Great Oaks WWTF	McCracken	001-1	09/30/2016	Flow, in conduit or thru	50050-1-0	Effluent Gross		0.035	MGD			MGD								N
KY0080845	Great Oaks WWTF	McCracken	001-1	09/30/2016	Flow, in conduit or thru	50050-1-0	Effluent Gross				0.035	MGD	MGD								N
KY0080845	Great Oaks WWTF	McCracken	001-1	08/31/2016	Flow, in conduit or thru	50050-1-0	Effluent Gross		0.025	MGD			MGD								N
KY0080845	Great Oaks WWTF	McCracken	001-1	08/31/2016	Flow, in conduit or thru	50050-1-0	Effluent Gross				0.025	MGD	MGD								N
KY0080845	Great Oaks WWTF	McCracken	001-1	07/31/2016	Flow, in conduit or thru	50050-1-0	Effluent Gross		0.055	MGD			MGD								N
KY0080845	Great Oaks WWTF	McCracken	001-1	07/31/2016	Flow, in conduit or thru	50050-1-0	Effluent Gross				0.055	MGD	MGD								N
KY0080845	Great Oaks WWTF	McCracken	001-1	06/30/2016	Flow, in conduit or thru	50050-1-0	Effluent Gross		0.035	MGD			MGD								N
KY0080845	Great Oaks WWTF	McCracken	001-1	06/30/2016	Flow, in conduit or thru	50050-1-0	Effluent Gross				0.035	MGD	MGD								N
KY0080845	Great Oaks WWTF	McCracken	001-1	05/31/2016	Flow, in conduit or thru	50050-1-0	Effluent Gross		0.04	MGD			MGD								N
KY0080845	Great Oaks WWTF	McCracken	001-1	05/31/2016	Flow, in conduit or thru	50050-1-0	Effluent Gross				0.04	MGD	MGD								N
KY0080845	Great Oaks WWTF	McCracken	001-1	04/30/2016	Flow, in conduit or thru	50050-1-0	Effluent Gross		0.05	MGD			MGD								N
KY0080845	Great Oaks WWTF	McCracken	001-1	04/30/2016	Flow, in conduit or thru	50050-1-0	Effluent Gross				0.05	MGD	MGD								N
KY0080845	Great Oaks WWTF	McCracken	001-1	03/31/2016	Flow, in conduit or thru	50050-1-0	Effluent Gross		0.05	MGD			MGD								N
KY0080845	Great Oaks WWTF	McCracken	001-1	03/31/2016	Flow, in conduit or thru	50050-1-0	Effluent Gross				0.05	MGD	MGD								N
KY0080845	Great Oaks WWTF	McCracken	001-1	02/29/2016	Flow, in conduit or thru	50050-1-0	Effluent Gross		0.04	MGD			MGD								N
KY0080845	Great Oaks WWTF	McCracken	001-1	02/29/2016	Flow, in conduit or thru	50050-1-0	Effluent Gross				0.04	MGD	MGD								N
KY0080845	Great Oaks WWTF	McCracken	001-1	01/31/2016	Flow, in conduit or thru	50050-1-0	Effluent Gross		0.025	MGD			MGD								N
KY0080845	Great Oaks WWTF	McCracken	001-1	01/31/2016	Flow, in conduit or thru	50050-1-0	Effluent Gross				0.025	MGD	MGD								N
KY0080845	Great Oaks WWTF	McCracken	001-1	12/31/2015	Flow, in conduit or thru	50050-1-0	Effluent Gross		0.04	MGD			MGD								N
KY0080845	Great Oaks WWTF	McCracken	001-1	12/31/2015	Flow, in conduit or thru	50050-1-0	Effluent Gross				0.04	MGD	MGD								N
KY0080845	Great Oaks WWTF	McCracken	001-1	11/30/2015	Flow, in conduit or thru	50050-1-0	Effluent Gross		0.033	MGD			MGD								N
KY0080845	Great Oaks WWTF	McCracken	001-1	11/30/2015	Flow, in conduit or thru	50050-1-0	Effluent Gross				0.033	MGD	MGD								N
KY0080845	Great Oaks WWTF	McCracken	001-1	10/31/2015	Flow, in conduit or thru	50050-1-0	Effluent Gross		0.042	MGD			MGD								N
KY0080845	Great Oaks WWTF	McCracken	001-1	10/31/2015	Flow, in conduit or thru	50050-1-0	Effluent Gross				0.042	MGD	MGD								N
KY0080845	Great Oaks WWTF	McCracken	001-1	09/30/2015	Flow, in conduit or thru	50050-1-0	Effluent Gross		0.052	MGD			MGD								N
KY0080845	Great Oaks WWTF	McCracken	001-1	09/30/2015	Flow, in conduit or thru	50050-1-0	Effluent Gross				0.052	MGD	MGD								N
KY0080845	Great Oaks WWTF	McCracken	001-1	08/31/2015	Flow, in conduit or thru	50050-1-0	Effluent Gross		0.032	MGD			MGD								N
KY0080845	Great Oaks WWTF	McCracken	001-1	08/31/2015	Flow, in conduit or thru	50050-1-0	Effluent Gross				0.032	MGD	MGD								N
KY0080845	Great Oaks WWTF	McCracken	001-1	07/31/2015	Flow, in conduit or thru	50050-1-0	Effluent Gross		0.03	MGD			MGD								N
KY0080845	Great Oaks WWTF	McCracken	001-1	07/31/2015	Flow, in conduit or thru	50050-1-0	Effluent Gross				0.03	MGD	MGD								N
KY0080845	Great Oaks WWTF	McCracken	001-1	06/30/2015	Flow, in conduit or thru	50050-1-0	Effluent Gross		0.035	MGD			MGD								N
KY0080845	Great Oaks WWTF	McCracken	001-1	06/30/2015	Flow, in conduit or thru	50050-1-0	Effluent Gross				0.035	MGD	MGD								N
KY0080845	Great Oaks WWTF	McCracken	001-1	05/31/2015	Flow, in conduit or thru	50050-1-0	Effluent Gross		0.018	MGD			MGD								N
KY0080845	Great Oaks WWTF	McCracken	001-1	05/31/2015	Flow, in conduit or thru	50050-1-0	Effluent Gross				0.018	MGD	MGD								N
KY0080845	Great Oaks WWTF	McCracken	001-1	04/30/2015	Flow, in conduit or thru	50050-1-0	Effluent Gross		0.04	MGD			MGD								N
KY0080845	Great Oaks WWTF	McCracken	001-1	04/30/2015	Flow, in conduit or thru	50050-1-0	Effluent Gross				0.04	MGD	MGD								N
KY0080845	Great Oaks WWTF	McCracken	001-1	03/31/2015	Flow, in conduit or thru	50050-1-0	Effluent Gross		0.042	MGD			MGD								N
KY0080845	Great Oaks WWTF	McCracken	001-1	03/31/2015	Flow, in conduit or thru	50050-1-0	Effluent Gross				0.042	MGD	MGD								N
KY0080845	Great Oaks WWTF	McCracken	001-1	02/28/2015	Flow, in conduit or thru	50050-1-0	Effluent Gross		0.035	MGD			MGD								N
KY0080845	Great Oaks WWTF	McCracken	001-1	02/28/2015	Flow, in conduit or thru	50050-1-0	Effluent Gross				0.035	MGD	MGD								N
KY0080845	Great Oaks WWTF	McCracken	001-1	01/31/2015	Flow, in conduit or thru	50050-1-0	Effluent Gross		0.041	MGD			MGD								N
KY0080845	Great Oaks WWTF	McCracken	001-1	01/31/2015	Flow, in conduit or thru	50050-1-0	Effluent Gross				0.041	MGD	MGD								N
KY0080845	Great Oaks WWTF	McCracken	001-1	12/31/2014	Flow, in conduit or thru	50050-1-0	Effluent Gross		0.042	MGD			MGD								N
KY0080845	Great Oaks WWTF	McCracken	001-1	12/31/2014	Flow, in conduit or thru	50050-1-0	Effluent Gross				0.042	MGD	MGD								N
KY0080845	Great Oaks WWTF	McCracken	001-1	11/30/2014	Flow, in conduit or thru	50050-1-0	Effluent Gross		0.035	MGD			MGD								N
KY0080845	Great Oaks WWTF	McCracken	001-1	11/30/2014	Flow, in conduit or thru	50050-1-0	Effluent Gross				0.035	MGD	MGD								N
KY0080845	Great Oaks WWTF	McCracken	001-1	10/31/2014	Flow, in conduit or thru	50050-1-0	Effluent Gross		0.032	MGD			MGD								N
KY0080845	Great Oaks WWTF	McCracken	001-1	10/31/2014	Flow, in conduit or thru	50050-1-0	Effluent Gross				0.032	MGD	MGD								N
KY0080845	Great Oaks WWTF	McCracken	001-1	09/30/2019	Chlorine, total residual	50060-1-0	Effluent Gross									NODI B		NODI B		mg/L	N
KY0080845	Great Oaks WWTF	McCracken	001-1	08/31/2019	Chlorine, total residual	50060-1-0	Effluent Gross									NODI B		NODI B		mg/L	N
KY0080845	Great Oaks WWTF	McCracken	001-1	07/31/2019	Chlorine, total residual	50060-1-0	Effluent Gross													mg/L	N
KY0080845	Great Oaks WWTF	McCracken	001-1	06/30/2019	Chlorine, total residual	50060-1-0	Effluent Gross													mg/L	N
KY0080845	Great Oaks WWTF	McCracken	001-1	05/31/2019	Chlorine, total residual	50060-1-0	Effluent Gross													mg/L	N
KY0080845	Great Oaks WWTF	McCracken	001-1	04/30/2019	Chlorine, total residual	50060-1-0	Effluent Gross													mg/L	N
KY0080845	Great Oaks WWTF	McCracken	001-1	03/31/2019	Chlorine, total residual	50060-1-0	Effluent Gross	445								0.06	mg/L			mg/L	Y
KY0080845	Great Oaks WWTF	McCracken	001-1	03/31/2019	Chlorine, total residual	50060-1-0	Effluent Gross	216										0.06	mg/L	mg/L	Y
KY0080845	Great Oaks WWTF	McCracken	001-1	02/28/2019	Chlorine, total residual	50060-1-0	Effluent Gross									0	mg/L			mg/L	N
KY0080845	Great Oaks WWTF	McCracken	001-1	02/28/2019	Chlorine, total residual	50060-1-0	Effluent Gross											0	mg/L	mg/L	N
KY0080845	Great Oaks WWTF	McCracken	001-1	01/31/2019	Chlorine, total residual	50060-1-0	Effluent Gross	264								0.04	mg/L			mg/L	Y
KY0080845	Great Oaks WWTF	McCracken	001-1	01/31/2019	Chlorine, total residual	50060-1-0	Effluent Gross	111										0.04	mg/L	mg/L	Y
KY0080845	Great Oaks WWTF	McCracken	001-1	12/31/2018	Chlorine, total residual	50060-1-0	Effluent Gross									0	mg/L			mg/L	N
KY0080845	Great Oaks WWTF	McCracken	001-1	12/31/2018	Chlorine, total residual	50060-1-0	Effluent Gross											0	mg/L	mg/L	N
KY0080845	Great Oaks WWTF	McCracken	001-1	11/30/2018	Chlorine, total residual	50060-1-0	Effluent Gross									0	mg/L			mg/L	N
KY0080845	Great Oaks WWTF	McCracken	001-1	11/30/2018	Chlorine, total residual	50060-1-0	Effluent Gross											0	mg/L	mg/L	N
KY0080845	Great Oaks WWTF	McCracken	001-1	10/31/2018	Chlorine, total residual	50060-1-0	Effluent Gross	173								0.03	mg/L			mg/L	Y
KY0080845	Great Oaks WWTF	McCracken	001-1	10/31/2018	Chlorine, total residual	50060-1-0	Effluent Gross	58										0.03	mg/L	mg/L	Y
KY0080845	Great Oaks WWTF	McCracken	001-1	09/30/2018	Chlorine, total residual	50060-1-0	Effluent Gross	18082								2	mg/L			mg/L	Y
KY0080845	Great Oaks WWTF	McCracken	001-1	09/30/2018	Chlorine, total residual	50060-1-0	Effluent Gross	10426										2	mg/L	mg/L	Y
KY0080845	Great Oaks WWTF	McCracken	001-1	08/31/2018	Chlorine, total residual	50060-1-0	Effluent Gross									0	mg/L			mg/L	N
KY0080845	Great Oaks WWTF	McCracken	001-1	08/31/2018	Chlorine, total residual	50060-1-0	Effluent Gross											0	mg/L	mg/L	N
KY0080845	Great Oaks WWTF	McCracken	001-1	07/31/2018	Chlorine, total residual	50060-1-0	Effluent Gross	718								0.09	mg/L			mg/L	Y
KY0080845	Great Oaks WWTF	McCracken	001-1	07/31/2018	Chlorine, total residual	50060-1-0	Effluent Gross	374										0.09	mg/L	mg/L	Y
KY0080845	Great Oaks WWTF	McCracken	001-1	06/30/2018	Chlorine, total residual	50060-1-0	Effluent Gross									0.01	mg/L			mg/L	N
KY0080845	Great Oaks WWTF	McCracken	001-1	06/30/2018	Chlorine, total residual	50060-1-0	Effluent Gross											0.01	mg/L	mg/L	N
KY0080845	Great Oaks WWTF	McCracken	001-1	05/31/2018	Chlorine, total residual	50060-1-0	Effluent Gross	82								0.02	mg/L			mg/L	Y
KY0080845	Great Oaks WWTF	McCracken	001-1	05/31/2018	Chlorine, total residual	50060-1-0	Effluent Gross	5										0.02	mg/L	mg/L	Y
KY0080845	Great Oaks WWTF	McCracken	001-1	04/30/2018	Chlorine, total residual	50060-1-0	Effluent Gross													mg/L	N
KY0080845	Great Oaks WWTF	McCracken	001-1	03/31/2018	Chlorine, total residual	50060-1-0	Effluent Gross	82								0.02	mg/L			mg/L	Y
KY0080845	Great Oaks WWTF	McCracken	001-1	03/31/2018	Chlorine, total residual	50060-1-0	Effluent Gross	5										0.02	mg/L	mg/L	Y
KY0080845	Great Oaks WWTF	McCracken	001-1	02/28/2018	Chlorine, total residual	50060-1-0	Effluent Gross	82								0.02	mg/L			mg/L	Y
KY0080845	Great Oaks WWTF	McCracken	001-1	02/28/2018	Chlorine, total residual	50060-1-0	Effluent Gross	5										0.02	mg/L	mg/L	Y
KY0080845	Great Oaks WWTF	McCracken	001-1	01/31/2018	Chlorine, total residual	50060-1-0	Effluent Gross	7627								0.85	mg/L			mg/L	Y
KY0080845	Great Oaks WWTF	McCracken	001-1	01/31/2018	Chlorine, total residual	50060-1-0	Effluent Gross	4374										0.85	mg/L	mg/L	Y
KY0080845	Great Oaks WWTF	McCracken	001-1	12/31/2017	Chlorine, total residual	50060-1-0	Effluent Gross									0	mg/L			mg/L	N
KY0080845	Great Oaks WWTF	McCracken	001-1	12/31/2017	Chlorine, total residual	50060-1-0	Effluent Gross											0	mg/L	mg/L	N
KY0080845	Great Oaks WWTF	McCracken	001-1	11/30/2017	Chlorine, total residual	50060-1-0	Effluent Gross									0	mg/L			mg/L	N
KY0080845	Great Oaks WWTF	McCracken	001-1	11/30/2017	Chlorine, total residual	50060-1-0	Effluent Gross											0	mg/L	mg/L	N
KY0080845	Great Oaks WWTF	McCracken	001-1	10/31/2017	Chlorine, total residual	50060-1-0	Effluent Gross									0	mg/L			mg/L	N
KY0080845	Great Oaks WWTF	McCracken	001-1	10/31/2017	Chlorine, total residual	50060-1-0	Effluent Gross											0	mg/L	mg/L	N
KY0080845	Great Oaks WWTF	McCracken	001-1	09/30/2017	Chlorine, total residual	50060-1-0	Effluent Gross									0	mg/L			mg/L	N
KY0080845	Great Oaks WWTF	McCracken	001-1	09/30/2017	Chlorine, total residual	50060-1-0	Effluent Gross											0	mg/L	mg/L	N
KY0080845	Great Oaks WWTF	McCracken	001-1	08/31/2017	Chlorine, total residual	50060-1-0	Effluent Gross									0	mg/L			mg/L	N
KY0080845	Great Oaks WWTF	McCracken	001-1	08/31/2017	Chlorine, total residual	50060-1-0	Effluent Gross											0	mg/L	mg/L	N
KY0080845	Great Oaks WWTF	McCracken	001-1	07/31/2017	Chlorine, total residual	50060-1-0	Effluent Gross									0	mg/L			mg/L	N
KY0080845	Great Oaks WWTF	McCracken	001-1	07/31/2017	Chlorine, total residual	50060-1-0	Effluent Gross											0	mg/L	mg/L	N
KY0080845	Great Oaks WWTF	McCracken	001-1	06/30/2017	Chlorine, total residual	50060-1-0	Effluent Gross									0	mg/L			mg/L	N
KY0080845	Great Oaks WWTF	McCracken	001-1	06/30/2017	Chlorine, total residual	50060-1-0	Effluent Gross											0	mg/L	mg/L	N
KY0080845	Great Oaks WWTF	McCracken	001-1	05/31/2017	Chlorine, total residual	50060-1-0	Effluent Gross									0	mg/L			mg/L	N
KY0080845	Great Oaks WWTF	McCracken	001-1	05/31/2017	Chlorine, total residual	50060-1-0	Effluent Gross											0	mg/L	mg/L	N
KY0080845	Great Oaks WWTF	McCracken	001-1	04/30/2017	Chlorine, total residual	50060-1-0	Effluent Gross									0	mg/L			mg/L	N
KY0080845	Great Oaks WWTF	McCracken	001-1	04/30/2017	Chlorine, total residual	50060-1-0	Effluent Gross											0	mg/L	mg/L	N
KY0080845	Great Oaks WWTF	McCracken	001-1	03/31/2017	Chlorine, total residual	50060-1-0	Effluent Gross									0	mg/L			mg/L	N
KY0080845	Great Oaks WWTF	McCracken	001-1	03/31/2017	Chlorine, total residual	50060-1-0	Effluent Gross											0	mg/L	mg/L	N
KY0080845	Great Oaks WWTF	McCracken	001-1	02/28/2017	Chlorine, total residual	50060-1-0	Effluent Gross									0	mg/L			mg/L	N

KY0080845	Great Oaks WWTF	McCracken	001-1	02/28/2017	Chlorine, total residual	50060-1-0	Effluent Gross										0	mg/L	mg/L	N
KY0080845	Great Oaks WWTF	McCracken	001-1	01/31/2017	Chlorine, total residual	50060-1-0	Effluent Gross								0	mg/L			mg/L	N
KY0080845	Great Oaks WWTF	McCracken	001-1	01/31/2017	Chlorine, total residual	50060-1-0	Effluent Gross										0	mg/L	mg/L	N
KY0080845	Great Oaks WWTF	McCracken	001-1	12/31/2016	Chlorine, total residual	50060-1-0	Effluent Gross								0	mg/L			mg/L	N
KY0080845	Great Oaks WWTF	McCracken	001-1	12/31/2016	Chlorine, total residual	50060-1-0	Effluent Gross										0	mg/L	mg/L	N
KY0080845	Great Oaks WWTF	McCracken	001-1	11/30/2016	Chlorine, total residual	50060-1-0	Effluent Gross								0	mg/L			mg/L	N
KY0080845	Great Oaks WWTF	McCracken	001-1	11/30/2016	Chlorine, total residual	50060-1-0	Effluent Gross										0	mg/L	mg/L	N
KY0080845	Great Oaks WWTF	McCracken	001-1	10/31/2016	Chlorine, total residual	50060-1-0	Effluent Gross								0	mg/L			mg/L	N
KY0080845	Great Oaks WWTF	McCracken	001-1	10/31/2016	Chlorine, total residual	50060-1-0	Effluent Gross										0	mg/L	mg/L	N
KY0080845	Great Oaks WWTF	McCracken	001-1	09/30/2016	Chlorine, total residual	50060-1-0	Effluent Gross								0	mg/L			mg/L	N
KY0080845	Great Oaks WWTF	McCracken	001-1	09/30/2016	Chlorine, total residual	50060-1-0	Effluent Gross										0	mg/L	mg/L	N
KY0080845	Great Oaks WWTF	McCracken	001-1	08/31/2016	Chlorine, total residual	50060-1-0	Effluent Gross								0	mg/L			mg/L	N
KY0080845	Great Oaks WWTF	McCracken	001-1	08/31/2016	Chlorine, total residual	50060-1-0	Effluent Gross										0	mg/L	mg/L	N
KY0080845	Great Oaks WWTF	McCracken	001-1	07/31/2016	Chlorine, total residual	50060-1-0	Effluent Gross								0	mg/L			mg/L	N
KY0080845	Great Oaks WWTF	McCracken	001-1	07/31/2016	Chlorine, total residual	50060-1-0	Effluent Gross										0	mg/L	mg/L	N
KY0080845	Great Oaks WWTF	McCracken	001-1	06/30/2016	Chlorine, total residual	50060-1-0	Effluent Gross								0	mg/L			mg/L	N
KY0080845	Great Oaks WWTF	McCracken	001-1	06/30/2016	Chlorine, total residual	50060-1-0	Effluent Gross										0	mg/L	mg/L	N
KY0080845	Great Oaks WWTF	McCracken	001-1	05/31/2016	Chlorine, total residual	50060-1-0	Effluent Gross								0	mg/L			mg/L	N
KY0080845	Great Oaks WWTF	McCracken	001-1	05/31/2016	Chlorine, total residual	50060-1-0	Effluent Gross										0	mg/L	mg/L	N
KY0080845	Great Oaks WWTF	McCracken	001-1	04/30/2016	Chlorine, total residual	50060-1-0	Effluent Gross								0	mg/L			mg/L	N
KY0080845	Great Oaks WWTF	McCracken	001-1	04/30/2016	Chlorine, total residual	50060-1-0	Effluent Gross										0	mg/L	mg/L	N
KY0080845	Great Oaks WWTF	McCracken	001-1	03/31/2016	Chlorine, total residual	50060-1-0	Effluent Gross								0	mg/L			mg/L	N
KY0080845	Great Oaks WWTF	McCracken	001-1	03/31/2016	Chlorine, total residual	50060-1-0	Effluent Gross										0	mg/L	mg/L	N
KY0080845	Great Oaks WWTF	McCracken	001-1	02/29/2016	Chlorine, total residual	50060-1-0	Effluent Gross								0	mg/L			mg/L	N
KY0080845	Great Oaks WWTF	McCracken	001-1	02/29/2016	Chlorine, total residual	50060-1-0	Effluent Gross										0	mg/L	mg/L	N
KY0080845	Great Oaks WWTF	McCracken	001-1	01/31/2016	Chlorine, total residual	50060-1-0	Effluent Gross								0	mg/L			mg/L	N
KY0080845	Great Oaks WWTF	McCracken	001-1	01/31/2016	Chlorine, total residual	50060-1-0	Effluent Gross										0	mg/L	mg/L	N
KY0080845	Great Oaks WWTF	McCracken	001-1	12/31/2015	Chlorine, total residual	50060-1-0	Effluent Gross								0	mg/L			mg/L	N
KY0080845	Great Oaks WWTF	McCracken	001-1	12/31/2015	Chlorine, total residual	50060-1-0	Effluent Gross										0	mg/L	mg/L	N
KY0080845	Great Oaks WWTF	McCracken	001-1	11/30/2015	Chlorine, total residual	50060-1-0	Effluent Gross								0	mg/L			mg/L	N
KY0080845	Great Oaks WWTF	McCracken	001-1	11/30/2015	Chlorine, total residual	50060-1-0	Effluent Gross										0	mg/L	mg/L	N
KY0080845	Great Oaks WWTF	McCracken	001-1	10/31/2015	Chlorine, total residual	50060-1-0	Effluent Gross								0	mg/L			mg/L	N
KY0080845	Great Oaks WWTF	McCracken	001-1	10/31/2015	Chlorine, total residual	50060-1-0	Effluent Gross										0	mg/L	mg/L	N
KY0080845	Great Oaks WWTF	McCracken	001-1	09/30/2015	Chlorine, total residual	50060-1-0	Effluent Gross								0	mg/L			mg/L	N
KY0080845	Great Oaks WWTF	McCracken	001-1	09/30/2015	Chlorine, total residual	50060-1-0	Effluent Gross										0	mg/L	mg/L	N
KY0080845	Great Oaks WWTF	McCracken	001-1	08/31/2015	Chlorine, total residual	50060-1-0	Effluent Gross								0	mg/L			mg/L	N
KY0080845	Great Oaks WWTF	McCracken	001-1	08/31/2015	Chlorine, total residual	50060-1-0	Effluent Gross										0	mg/L	mg/L	N
KY0080845	Great Oaks WWTF	McCracken	001-1	07/31/2015	Chlorine, total residual	50060-1-0	Effluent Gross								0	mg/L			mg/L	N
KY0080845	Great Oaks WWTF	McCracken	001-1	07/31/2015	Chlorine, total residual	50060-1-0	Effluent Gross										0	mg/L	mg/L	N
KY0080845	Great Oaks WWTF	McCracken	001-1	06/30/2015	Chlorine, total residual	50060-1-0	Effluent Gross								0	mg/L			mg/L	N
KY0080845	Great Oaks WWTF	McCracken	001-1	06/30/2015	Chlorine, total residual	50060-1-0	Effluent Gross										0	mg/L	mg/L	N
KY0080845	Great Oaks WWTF	McCracken	001-1	05/31/2015	Chlorine, total residual	50060-1-0	Effluent Gross								0	mg/L			mg/L	N
KY0080845	Great Oaks WWTF	McCracken	001-1	05/31/2015	Chlorine, total residual	50060-1-0	Effluent Gross										0	mg/L	mg/L	N
KY0080845	Great Oaks WWTF	McCracken	001-1	04/30/2015	Chlorine, total residual	50060-1-0	Effluent Gross								0	mg/L			mg/L	N
KY0080845	Great Oaks WWTF	McCracken	001-1	04/30/2015	Chlorine, total residual	50060-1-0	Effluent Gross										0	mg/L	mg/L	N
KY0080845	Great Oaks WWTF	McCracken	001-1	03/31/2015	Chlorine, total residual	50060-1-0	Effluent Gross								0	mg/L			mg/L	N
KY0080845	Great Oaks WWTF	McCracken	001-1	03/31/2015	Chlorine, total residual	50060-1-0	Effluent Gross										0	mg/L	mg/L	N
KY0080845	Great Oaks WWTF	McCracken	001-1	02/28/2015	Chlorine, total residual	50060-1-0	Effluent Gross								0	mg/L			mg/L	N
KY0080845	Great Oaks WWTF	McCracken	001-1	02/28/2015	Chlorine, total residual	50060-1-0	Effluent Gross										0	mg/L	mg/L	N
KY0080845	Great Oaks WWTF	McCracken	001-1	01/31/2015	Chlorine, total residual	50060-1-0	Effluent Gross								0	mg/L			mg/L	N
KY0080845	Great Oaks WWTF	McCracken	001-1	01/31/2015	Chlorine, total residual	50060-1-0	Effluent Gross										0	mg/L	mg/L	N
KY0080845	Great Oaks WWTF	McCracken	001-1	12/31/2014	Chlorine, total residual	50060-1-0	Effluent Gross								0	mg/L			mg/L	N
KY0080845	Great Oaks WWTF	McCracken	001-1	12/31/2014	Chlorine, total residual	50060-1-0	Effluent Gross										0	mg/L	mg/L	N
KY0080845	Great Oaks WWTF	McCracken	001-1	11/30/2014	Chlorine, total residual	50060-1-0	Effluent Gross								0	mg/L			mg/L	N
KY0080845	Great Oaks WWTF	McCracken	001-1	11/30/2014	Chlorine, total residual	50060-1-0	Effluent Gross										0	mg/L	mg/L	N
KY0080845	Great Oaks WWTF	McCracken	001-1	10/31/2014	Chlorine, total residual	50060-1-0	Effluent Gross								0	mg/L			mg/L	N
KY0080845	Great Oaks WWTF	McCracken	001-1	10/31/2014	Chlorine, total residual	50060-1-0	Effluent Gross										0	mg/L	mg/L	N
KY0080845	Great Oaks WWTF	McCracken	001-1	09/30/2019	E. coli	51040-1-0	Effluent Gross								9		9		#/100mL	N
KY0080845	Great Oaks WWTF	McCracken	001-1	08/31/2019	E. coli	51040-1-0	Effluent Gross								90		90		#/100mL	N
KY0080845	Great Oaks WWTF	McCracken	001-1	07/31/2019	E. coli	51040-1-0	Effluent Gross												#/100mL	N
KY0080845	Great Oaks WWTF	McCracken	001-1	06/30/2019	E. coli	51040-1-0	Effluent Gross												#/100mL	N
KY0080845	Great Oaks WWTF	McCracken	001-1	05/31/2019	E. coli	51040-1-0	Effluent Gross												#/100mL	N
KY0080845	Great Oaks WWTF	McCracken	001-1	04/30/2019	E. coli	51040-1-0	Effluent Gross												#/100mL	N
KY0080845	Great Oaks WWTF	McCracken	001-1	03/31/2019	E. coli	51040-1-0	Effluent Gross	1762							2420	#/100mL			#/100mL	Y
KY0080845	Great Oaks WWTF	McCracken	001-1	03/31/2019	E. coli	51040-1-0	Effluent Gross	908									2420	#/100mL	#/100mL	Y
KY0080845	Great Oaks WWTF	McCracken	001-1	02/28/2019	E. coli	51040-1-0	Effluent Gross								1	#/100mL			#/100mL	N
KY0080845	Great Oaks WWTF	McCracken	001-1	02/28/2019	E. coli	51040-1-0	Effluent Gross										1	#/100mL	#/100mL	N
KY0080845	Great Oaks WWTF	McCracken	001-1	01/31/2019	E. coli	51040-1-0	Effluent Gross								1	#/100mL			#/100mL	N
KY0080845	Great Oaks WWTF	McCracken	001-1	01/31/2019	E. coli	51040-1-0	Effluent Gross										1	#/100mL	#/100mL	N
KY0080845	Great Oaks WWTF	McCracken	001-1	12/31/2018	E. coli	51040-1-0	Effluent Gross	1762							2420	#/100mL			#/100mL	Y
KY0080845	Great Oaks WWTF	McCracken	001-1	12/31/2018	E. coli	51040-1-0	Effluent Gross	908									2420	#/100mL	#/100mL	Y
KY0080845	Great Oaks WWTF	McCracken	001-1	11/30/2018	E. coli	51040-1-0	Effluent Gross								1	#/100mL			#/100mL	N
KY0080845	Great Oaks WWTF	McCracken	001-1	11/30/2018	E. coli	51040-1-0	Effluent Gross										1	#/100mL	#/100mL	N
KY0080845	Great Oaks WWTF	McCracken	001-1	10/31/2018	E. coli	51040-1-0	Effluent Gross								1	#/100mL			#/100mL	N
KY0080845	Great Oaks WWTF	McCracken	001-1	10/31/2018	E. coli	51040-1-0	Effluent Gross										1	#/100mL	#/100mL	N
KY0080845	Great Oaks WWTF	McCracken	001-1	09/30/2018	E. coli	51040-1-0	Effluent Gross								1	#/100mL			#/100mL	N
KY0080845	Great Oaks WWTF	McCracken	001-1	09/30/2018	E. coli	51040-1-0	Effluent Gross										1	#/100mL	#/100mL	N
KY0080845	Great Oaks WWTF	McCracken	001-1	08/31/2018	E. coli	51040-1-0	Effluent Gross	1762							2420	#/100mL			#/100mL	Y
KY0080845	Great Oaks WWTF	McCracken	001-1	08/31/2018	E. coli	51040-1-0	Effluent Gross	908									2420	#/100mL	#/100mL	Y
KY0080845	Great Oaks WWTF	McCracken	001-1	07/31/2018	E. coli	51040-1-0	Effluent Gross								1	#/100mL			#/100mL	N
KY0080845	Great Oaks WWTF	McCracken	001-1	07/31/2018	E. coli	51040-1-0	Effluent Gross										1	#/100mL	#/100mL	N
KY0080845	Great Oaks WWTF	McCracken	001-1	06/30/2018	E. coli	51040-1-0	Effluent Gross	492							770	#/100mL			#/100mL	Y
KY0080845	Great Oaks WWTF	McCracken	001-1	06/30/2018	E. coli	51040-1-0	Effluent Gross	221									770	#/100mL	#/100mL	Y
KY0080845	Great Oaks WWTF	McCracken	001-1	05/31/2018	E. coli	51040-1-0	Effluent Gross	76							228.2	#/100mL			#/100mL	Y
KY0080845	Great Oaks WWTF	McCracken	001-1	05/31/2018	E. coli	51040-1-0	Effluent Gross										228.2	#/100mL	#/100mL	N
KY0080845	Great Oaks WWTF	McCracken	001-1	04/30/2018	E. coli	51040-1-0	Effluent Gross												#/100mL	N
KY0080845	Great Oaks WWTF	McCracken	001-1	03/31/2018	E. coli	51040-1-0	Effluent Gross	1762							2420	#/100mL			#/100mL	Y
KY0080845	Great Oaks WWTF	McCracken	001-1	03/31/2018	E. coli	51040-1-0	Effluent Gross	908									2420	#/100mL	#/100mL	Y
KY0080845	Great Oaks WWTF	McCracken	001-1	02/28/2018	E. coli	51040-1-0	Effluent Gross								122.3	#/100mL			#/100mL	N
KY0080845	Great Oaks WWTF	McCracken	001-1	02/28/2018	E. coli	51040-1-0	Effluent Gross										122.3	#/100mL	#/100mL	N
KY0080845	Great Oaks WWTF	McCracken	001-1	01/31/2018	E. coli	51040-1-0	Effluent Gross								1	#/100mL			#/100mL	N
KY0080845	Great Oaks WWTF	McCracken	001-1	01/31/2018	E. coli	51040-1-0	Effluent Gross										1	#/100mL	#/100mL	N
KY0080845	Great Oaks WWTF	McCracken	001-1	12/31/2017	E. coli	51040-1-0	Effluent Gross	59							206.4	#/100mL			#/100mL	Y
KY0080845	Great Oaks WWTF	McCracken	001-1	12/31/2017	E. coli	51040-1-0	Effluent Gross										206.4	#/100mL	#/100mL	N
KY0080845	Great Oaks WWTF	McCracken	001-1	11/30/2017	E. coli	51040-1-0	Effluent Gross								1	#/100mL			#/100mL	N
KY0080845	Great Oaks WWTF	McCracken	001-1	11/30/2017	E. coli	51040-1-0	Effluent Gross										1	#/100mL	#/100mL	N
KY0080845	Great Oaks WWTF	McCracken	001-1	10/31/2017	E. coli	51040-1-0	Effluent Gross								1	#/100mL			#/100mL	N
KY0080845	Great Oaks WWTF	McCracken	001-1	10/31/2017	E. coli	51040-1-0	Effluent Gross										1	#/100mL	#/100mL	N
KY0080845	Great Oaks WWTF	McCracken	001-1	09/30/2017	E. coli	51040-1-0	Effluent Gross								1	#/100mL			#/100mL	N
KY0080845	Great Oaks WWTF	McCracken	001-1	09/30/2017	E. coli	51040-1-0	Effluent Gross										1	#/100mL	#/100mL	N
KY0080845	Great Oaks WWTF	McCracken	001-1	08/31/2017	E. coli	51040-1-0	Effluent Gross								1	#/100mL			#/100mL	N
KY0080845	Great Oaks WWTF	McCracken	001-1	08/31/2017	E. coli	51040-1-0	Effluent Gross										1	#/100mL	#/100mL	N
KY0080845	Great Oaks WWTF	McCracken	001-1	07/31/2017	E. coli	51040-1-0	Effluent Gross								1	#/100mL			#/100mL	N
KY0080845	Great Oaks WWTF	McCracken	001-1	07/31/2017	E. coli	51040-1-0	Effluent Gross										1	#/100mL	#/100mL	N
KY0080845	Great Oaks WWTF	McCracken	001-1	06/30/2017	E. coli	51040-1-0	Effluent Gross								1	#/100mL			#/100mL	N
KY0080845	Great Oaks WWTF	McCracken	001-1	06/30/2017	E. coli	51040-1-0	Effluent Gross										1	#/100mL	#/100mL	N
KY0080845	Great Oaks WWTF	McCracken	001-1	05/31/2017	E. coli	51040-1-0	Effluent Gross								1	#/100mL			#/100mL	N
KY0080845	Great Oaks WWTF	McCracken	001-1	05/31/2017	E. coli	51040-1-0	Effluent Gross										1	#/100mL	#/100mL	N
KY0080845	Great Oaks WWTF	McCracken	001-1	04/30/2017	E. coli	51040-1-0	Effluent Gross								1	#/100mL			#/100mL	N
KY0080845	Great Oaks WWTF	McCracken	001-1	04/30/2017	E. coli	51040-1-0	Effluent Gross										1	#/100mL	#/100mL	N
KY0080845	Great Oaks WWTF	McCracken	001-1	03/31/2017	E. coli	51040-1-0	Effluent Gross								1	#/100mL			#/100mL	N
KY0080845	Great Oaks WWTF	McCracken	001-1	03/31/2017	E. coli	51040-1-0	Effluent Gross										1	#/100mL	#/100mL	N
KY0080845	Great Oaks WWTF	McCracken	001-1	02/28/2017	E. coli	51040-1-0	Effluent Gross								1	#/100mL			#/100mL	N

KY0080845	Great Oaks WWTF	McCracken	001-1	01/31/2017	E. coli	51040-1-0	Effluent Gross									10	#/100mL			#/100mL	N
KY0080845	Great Oaks WWTF	McCracken	001-1	01/31/2017	E. coli	51040-1-0	Effluent Gross											10	#/100mL	#/100mL	N
KY0080845	Great Oaks WWTF	McCracken	001-1	12/31/2016	E. coli	51040-1-0	Effluent Gross									1	#/100mL			#/100mL	N
KY0080845	Great Oaks WWTF	McCracken	001-1	12/31/2016	E. coli	51040-1-0	Effluent Gross											1	#/100mL	#/100mL	N
KY0080845	Great Oaks WWTF	McCracken	001-1	11/30/2016	E. coli	51040-1-0	Effluent Gross									1	#/100mL			#/100mL	N
KY0080845	Great Oaks WWTF	McCracken	001-1	11/30/2016	E. coli	51040-1-0	Effluent Gross											1	#/100mL	#/100mL	N
KY0080845	Great Oaks WWTF	McCracken	001-1	10/31/2016	E. coli	51040-1-0	Effluent Gross									1	#/100mL			#/100mL	N
KY0080845	Great Oaks WWTF	McCracken	001-1	10/31/2016	E. coli	51040-1-0	Effluent Gross											1	#/100mL	#/100mL	N
KY0080845	Great Oaks WWTF	McCracken	001-1	09/30/2016	E. coli	51040-1-0	Effluent Gross									1	#/100mL			#/100mL	N
KY0080845	Great Oaks WWTF	McCracken	001-1	09/30/2016	E. coli	51040-1-0	Effluent Gross											1	#/100mL	#/100mL	N
KY0080845	Great Oaks WWTF	McCracken	001-1	08/31/2016	E. coli	51040-1-0	Effluent Gross									1	#/100mL			#/100mL	N
KY0080845	Great Oaks WWTF	McCracken	001-1	08/31/2016	E. coli	51040-1-0	Effluent Gross											1	#/100mL	#/100mL	N
KY0080845	Great Oaks WWTF	McCracken	001-1	07/31/2016	E. coli	51040-1-0	Effluent Gross									1	#/100mL			#/100mL	N
KY0080845	Great Oaks WWTF	McCracken	001-1	07/31/2016	E. coli	51040-1-0	Effluent Gross											1	#/100mL	#/100mL	N
KY0080845	Great Oaks WWTF	McCracken	001-1	06/30/2016	E. coli	51040-1-0	Effluent Gross									1	#/100mL			#/100mL	N
KY0080845	Great Oaks WWTF	McCracken	001-1	06/30/2016	E. coli	51040-1-0	Effluent Gross											1	#/100mL	#/100mL	N
KY0080845	Great Oaks WWTF	McCracken	001-1	05/31/2016	E. coli	51040-1-0	Effluent Gross									1	#/100mL			#/100mL	N
KY0080845	Great Oaks WWTF	McCracken	001-1	05/31/2016	E. coli	51040-1-0	Effluent Gross											1	#/100mL	#/100mL	N
KY0080845	Great Oaks WWTF	McCracken	001-1	04/30/2016	E. coli	51040-1-0	Effluent Gross									1	#/100mL			#/100mL	N
KY0080845	Great Oaks WWTF	McCracken	001-1	04/30/2016	E. coli	51040-1-0	Effluent Gross											1	#/100mL	#/100mL	N
KY0080845	Great Oaks WWTF	McCracken	001-1	03/31/2016	E. coli	51040-1-0	Effluent Gross									1	#/100mL			#/100mL	N
KY0080845	Great Oaks WWTF	McCracken	001-1	03/31/2016	E. coli	51040-1-0	Effluent Gross											1	#/100mL	#/100mL	N
KY0080845	Great Oaks WWTF	McCracken	001-1	02/29/2016	E. coli	51040-1-0	Effluent Gross									1	#/100mL			#/100mL	N
KY0080845	Great Oaks WWTF	McCracken	001-1	02/29/2016	E. coli	51040-1-0	Effluent Gross											1	#/100mL	#/100mL	N
KY0080845	Great Oaks WWTF	McCracken	001-1	01/31/2016	E. coli	51040-1-0	Effluent Gross									1	#/100mL			#/100mL	N
KY0080845	Great Oaks WWTF	McCracken	001-1	01/31/2016	E. coli	51040-1-0	Effluent Gross											1	#/100mL	#/100mL	N
KY0080845	Great Oaks WWTF	McCracken	001-1	12/31/2015	E. coli	51040-1-0	Effluent Gross									1	#/100mL			#/100mL	N
KY0080845	Great Oaks WWTF	McCracken	001-1	12/31/2015	E. coli	51040-1-0	Effluent Gross											1	#/100mL	#/100mL	N
KY0080845	Great Oaks WWTF	McCracken	001-1	11/30/2015	E. coli	51040-1-0	Effluent Gross									1	#/100mL			#/100mL	N
KY0080845	Great Oaks WWTF	McCracken	001-1	11/30/2015	E. coli	51040-1-0	Effluent Gross											1	#/100mL	#/100mL	N
KY0080845	Great Oaks WWTF	McCracken	001-1	10/31/2015	E. coli	51040-1-0	Effluent Gross									1	#/100mL			#/100mL	N
KY0080845	Great Oaks WWTF	McCracken	001-1	10/31/2015	E. coli	51040-1-0	Effluent Gross											1	#/100mL	#/100mL	N
KY0080845	Great Oaks WWTF	McCracken	001-1	09/30/2015	E. coli	51040-1-0	Effluent Gross									1	#/100mL			#/100mL	N
KY0080845	Great Oaks WWTF	McCracken	001-1	09/30/2015	E. coli	51040-1-0	Effluent Gross											1	#/100mL	#/100mL	N
KY0080845	Great Oaks WWTF	McCracken	001-1	08/31/2015	E. coli	51040-1-0	Effluent Gross									1	#/100mL			#/100mL	N
KY0080845	Great Oaks WWTF	McCracken	001-1	08/31/2015	E. coli	51040-1-0	Effluent Gross											1	#/100mL	#/100mL	N
KY0080845	Great Oaks WWTF	McCracken	001-1	07/31/2015	E. coli	51040-1-0	Effluent Gross									122	#/100mL			#/100mL	N
KY0080845	Great Oaks WWTF	McCracken	001-1	07/31/2015	E. coli	51040-1-0	Effluent Gross											122	#/100mL	#/100mL	N
KY0080845	Great Oaks WWTF	McCracken	001-1	06/30/2015	E. coli	51040-1-0	Effluent Gross									1	#/100mL			#/100mL	N
KY0080845	Great Oaks WWTF	McCracken	001-1	06/30/2015	E. coli	51040-1-0	Effluent Gross											1	#/100mL	#/100mL	N
KY0080845	Great Oaks WWTF	McCracken	001-1	05/31/2015	E. coli	51040-1-0	Effluent Gross									1	#/100mL			#/100mL	N
KY0080845	Great Oaks WWTF	McCracken	001-1	05/31/2015	E. coli	51040-1-0	Effluent Gross											1	#/100mL	#/100mL	N
KY0080845	Great Oaks WWTF	McCracken	001-1	04/30/2015	E. coli	51040-1-0	Effluent Gross									1	#/100mL			#/100mL	N
KY0080845	Great Oaks WWTF	McCracken	001-1	04/30/2015	E. coli	51040-1-0	Effluent Gross											1	#/100mL	#/100mL	N
KY0080845	Great Oaks WWTF	McCracken	001-1	03/31/2015	E. coli	51040-1-0	Effluent Gross									1	#/100mL			#/100mL	N
KY0080845	Great Oaks WWTF	McCracken	001-1	03/31/2015	E. coli	51040-1-0	Effluent Gross											1	#/100mL	#/100mL	N
KY0080845	Great Oaks WWTF	McCracken	001-1	02/28/2015	E. coli	51040-1-0	Effluent Gross									1	#/100mL			#/100mL	N
KY0080845	Great Oaks WWTF	McCracken	001-1	02/28/2015	E. coli	51040-1-0	Effluent Gross											1	#/100mL	#/100mL	N
KY0080845	Great Oaks WWTF	McCracken	001-1	01/31/2015	E. coli	51040-1-0	Effluent Gross									1	#/100mL			#/100mL	N
KY0080845	Great Oaks WWTF	McCracken	001-1	01/31/2015	E. coli	51040-1-0	Effluent Gross											1	#/100mL	#/100mL	N
KY0080845	Great Oaks WWTF	McCracken	001-1	12/31/2014	E. coli	51040-1-0	Effluent Gross									1	#/100mL			#/100mL	N
KY0080845	Great Oaks WWTF	McCracken	001-1	12/31/2014	E. coli	51040-1-0	Effluent Gross											1	#/100mL	#/100mL	N
KY0080845	Great Oaks WWTF	McCracken	001-1	11/30/2014	E. coli	51040-1-0	Effluent Gross	1233								1733	#/100mL			#/100mL	Y
KY0080845	Great Oaks WWTF	McCracken	001-1	11/30/2014	E. coli	51040-1-0	Effluent Gross	622										1733	#/100mL	#/100mL	Y
KY0080845	Great Oaks WWTF	McCracken	001-1	10/31/2014	E. coli	51040-1-0	Effluent Gross									1	#/100mL			#/100mL	N
KY0080845	Great Oaks WWTF	McCracken	001-1	10/31/2014	E. coli	51040-1-0	Effluent Gross											1	#/100mL	#/100mL	N
KY0080845	Great Oaks WWTF	McCracken	001-1	09/30/2019	BOD, carbonaceous [5 day,	80082-1-0	Effluent Gross		1		1		lb/d								N
KY0080845	Great Oaks WWTF	McCracken	001-1	09/30/2019	BOD, carbonaceous [5 day,	80082-1-0	Effluent Gross									4		4		mg/L	N
KY0080845	Great Oaks WWTF	McCracken	001-1	08/31/2019	BOD, carbonaceous [5 day,	80082-1-0	Effluent Gross		1		1		lb/d								N
KY0080845	Great Oaks WWTF	McCracken	001-1	08/31/2019	BOD, carbonaceous [5 day,	80082-1-0	Effluent Gross									3		3		mg/L	N
KY0080845	Great Oaks WWTF	McCracken	001-1	07/31/2019	BOD, carbonaceous [5 day,	80082-1-0	Effluent Gross						lb/d								N
KY0080845	Great Oaks WWTF	McCracken	001-1	07/31/2019	BOD, carbonaceous [5 day,	80082-1-0	Effluent Gross													mg/L	N
KY0080845	Great Oaks WWTF	McCracken	001-1	06/30/2019	BOD, carbonaceous [5 day,	80082-1-0	Effluent Gross						lb/d								N
KY0080845	Great Oaks WWTF	McCracken	001-1	06/30/2019	BOD, carbonaceous [5 day,	80082-1-0	Effluent Gross													mg/L	N
KY0080845	Great Oaks WWTF	McCracken	001-1	05/31/2019	BOD, carbonaceous [5 day,	80082-1-0	Effluent Gross						lb/d								N
KY0080845	Great Oaks WWTF	McCracken	001-1	05/31/2019	BOD, carbonaceous [5 day,	80082-1-0	Effluent Gross													mg/L	N
KY0080845	Great Oaks WWTF	McCracken	001-1	04/30/2019	BOD, carbonaceous [5 day,	80082-1-0	Effluent Gross						lb/d								N
KY0080845	Great Oaks WWTF	McCracken	001-1	04/30/2019	BOD, carbonaceous [5 day,	80082-1-0	Effluent Gross													mg/L	N
KY0080845	Great Oaks WWTF	McCracken	001-1	03/31/2019	BOD, carbonaceous [5 day,	80082-1-0	Effluent Gross	145	14.3	lb/d			lb/d								Y
KY0080845	Great Oaks WWTF	McCracken	001-1	03/31/2019	BOD, carbonaceous [5 day,	80082-1-0	Effluent Gross	63			14.3	lb/d	lb/d								Y
KY0080845	Great Oaks WWTF	McCracken	001-1	03/31/2019	BOD, carbonaceous [5 day,	80082-1-0	Effluent Gross	390								49	mg/L			mg/L	Y
KY0080845	Great Oaks WWTF	McCracken	001-1	03/31/2019	BOD, carbonaceous [5 day,	80082-1-0	Effluent Gross	227										49	mg/L	mg/L	Y
KY0080845	Great Oaks WWTF	McCracken	001-1	02/28/2019	BOD, carbonaceous [5 day,	80082-1-0	Effluent Gross		1.459	lb/d			lb/d								N
KY0080845	Great Oaks WWTF	McCracken	001-1	02/28/2019	BOD, carbonaceous [5 day,	80082-1-0	Effluent Gross				1.459	lb/d	lb/d								N
KY0080845	Great Oaks WWTF	McCracken	001-1	02/28/2019	BOD, carbonaceous [5 day,	80082-1-0	Effluent Gross									5	mg/L			mg/L	N
KY0080845	Great Oaks WWTF	McCracken	001-1	02/28/2019	BOD, carbonaceous [5 day,	80082-1-0	Effluent Gross											5	mg/L	mg/L	N
KY0080845	Great Oaks WWTF	McCracken	001-1	01/31/2019	BOD, carbonaceous [5 day,	80082-1-0	Effluent Gross	71	10	lb/d			lb/d								Y
KY0080845	Great Oaks WWTF	McCracken	001-1	01/31/2019	BOD, carbonaceous [5 day,	80082-1-0	Effluent Gross	14			10	lb/d	lb/d								Y
KY0080845	Great Oaks WWTF	McCracken	001-1	01/31/2019	BOD, carbonaceous [5 day,	80082-1-0	Effluent Gross	300								40	mg/L			mg/L	Y
KY0080845	Great Oaks WWTF	McCracken	001-1	01/31/2019	BOD, carbonaceous [5 day,	80082-1-0	Effluent Gross	167										40	mg/L	mg/L	Y
KY0080845	Great Oaks WWTF	McCracken	001-1	12/31/2018	BOD, carbonaceous [5 day,	80082-1-0	Effluent Gross		4.962	lb/d			lb/d								N
KY0080845	Great Oaks WWTF	McCracken	001-1	12/31/2018	BOD, carbonaceous [5 day,	80082-1-0	Effluent Gross				4.962	lb/d	lb/d								N
KY0080845	Great Oaks WWTF	McCracken	001-1	12/31/2018	BOD, carbonaceous [5 day,	80082-1-0	Effluent Gross	70								17	mg/L			mg/L	Y
KY0080845	Great Oaks WWTF	McCracken	001-1	12/31/2018	BOD, carbonaceous [5 day,	80082-1-0	Effluent Gross	13										17	mg/L	mg/L	Y
KY0080845	Great Oaks WWTF	McCracken	001-1	11/30/2018	BOD, carbonaceous [5 day,	80082-1-0	Effluent Gross	40	8.173	lb/d			lb/d								Y
KY0080845	Great Oaks WWTF	McCracken	001-1	11/30/2018	BOD, carbonaceous [5 day,	80082-1-0	Effluent Gross				8.173	lb/d	lb/d								N
KY0080845	Great Oaks WWTF	McCracken	001-1	11/30/2018	BOD, carbonaceous [5 day,	80082-1-0	Effluent Gross	250								35	mg/L			mg/L	Y
KY0080845	Great Oaks WWTF	McCracken	001-1	11/30/2018	BOD, carbonaceous [5 day,	80082-1-0	Effluent Gross	133										35	mg/L	mg/L	Y
KY0080845	Great Oaks WWTF	McCracken	001-1	10/31/2018	BOD, carbonaceous [5 day,	80082-1-0	Effluent Gross		1.563	lb/d			lb/d								N
KY0080845	Great Oaks WWTF	McCracken	001-1	10/31/2018	BOD, carbonaceous [5 day,	80082-1-0	Effluent Gross				1.563	lb/d	lb/d								N
KY0080845	Great Oaks WWTF	McCracken	001-1	10/31/2018	BOD, carbonaceous [5 day,	80082-1-0	Effluent Gross									5	mg/L			mg/L	N
KY0080845	Great Oaks WWTF	McCracken	001-1	10/31/2018	BOD, carbonaceous [5 day,	80082-1-0	Effluent Gross											5	mg/L	mg/L	N
KY0080845	Great Oaks WWTF	McCracken	001-1	09/30/2018	BOD, carbonaceous [5 day,	80082-1-0	Effluent Gross		2.71	lb/d			lb/d								N
KY0080845	Great Oaks WWTF	McCracken	001-1	09/30/2018	BOD, carbonaceous [5 day,	80082-1-0	Effluent Gross				2.71	lb/d	lb/d								N
KY0080845	Great Oaks WWTF	McCracken	001-1	09/30/2018	BOD, carbonaceous [5 day,	80082-1-0	Effluent Gross									5	mg/L			mg/L	N
KY0080845	Great Oaks WWTF	McCracken	001-1	09/30/2018	BOD, carbonaceous [5 day,	80082-1-0	Effluent Gross											5	mg/L	mg/L	N
KY0080845	Great Oaks WWTF	McCracken	001-1	08/31/2018	BOD, carbonaceous [5 day,	80082-1-0	Effluent Gross		2.335	lb/d			lb/d								N
KY0080845	Great Oaks WWTF	McCracken	001-1	08/31/2018	BOD, carbonaceous [5 day,	80082-1-0	Effluent Gross				2.335	lb/d	lb/d								N
KY0080845	Great Oaks WWTF	McCracken	001-1	08/31/2018	BOD, carbonaceous [5 day,	80082-1-0	Effluent Gross									10	mg/L			mg/L	N
KY0080845	Great Oaks WWTF	McCracken	001-1	08/31/2018	BOD, carbonaceous [5 day,	80082-1-0	Effluent Gross											10	mg/L	mg/L	N
KY0080845	Great Oaks WWTF	McCracken	001-1	07/31/2018	BOD, carbonaceous [5 day,	80082-1-0	Effluent Gross	86	10.84	lb/d			lb/d								Y
KY0080845	Great Oaks WWTF	McCracken	001-1	07/31/2018	BOD, carbonaceous [5 day,	80082-1-0	Effluent Gross	24			10.84	lb/d	lb/d								Y
KY0080845	Great Oaks WWTF	McCracken	001-1	07/31/2018	BOD, carbonaceous [5 day,	80082-1-0	Effluent Gross	420								52	mg/L			mg/L	Y
KY0080845	Great Oaks WWTF	McCracken	001-1	07/31/2018	BOD, carbonaceous [5 day,	80082-1-0	Effluent Gross	247										52	mg/L	mg/L	Y
KY0080845	Great Oaks WWTF	McCracken	001-1	06/30/2018	BOD, carbonaceous [5 day,	80082-1-0	Effluent Gross		1.042	lb/d			lb/d								N
KY0080845	Great Oaks WWTF	McCracken	001-1	06/30/2018	BOD, carbonaceous [5 day,	80082-1-0	Effluent Gross				1.042	lb/d	lb/d								N
KY0080845	Great Oaks WWTF	McCracken	001-1	06/30/2018	BOD, carbonaceous [5 day,	80082-1-0	Effluent Gross									5	mg/L			mg/L	N
KY0080845	Great Oaks WWTF	McCracken	001-1	06/30/2018	BOD, carbonaceous [5 day,	80082-1-0	Effluent Gross											5	mg/L	mg/L	N
KY0080845	Great Oaks WWTF	McCracken	001-1	05/31/2018	BOD, carbonaceous [5 day,	80082-1-0	Effluent Gross		1.251	lb/d			lb/d								N
KY0080845	Great Oaks WWTF	McCracken	001-1	05/31/2018	BOD, carbonaceous [5 day,	80082-1-0	Effluent Gross				1.251	lb/d	lb/d								N
KY0080845	Great Oaks WWTF	McCracken	001-1	05/31/2018	BOD, carbonaceous [5 day,	80082-1-0	Effluent Gross									5	mg/L			mg/L	N
KY0080845	Great Oaks WWTF	McCracken	001-1	05/31/2018	BOD, carbonaceous [5 day,	80082-1-0	Effluent Gross											5	mg/L	mg/L	N
KY0080845	Great Oaks WWTF	McCracken	001-1	04/30/2018	BOD, carbonaceous [5 day,	80082-1-0	Effluent Gross						lb/d								N
KY0080845	Great Oaks WWTF	McCracken	001-1	04/30/2018	BOD, carbonaceous [5 day,	80082-1-0	Effluent Gross													mg/L	N

KY0080845	Great Oaks WWTF	McCracken	001-1	03/31/2018	BOD, carbonaceous [5 day,	80082-1-0	Effluent Gross	46	8.506	lb/d			lb/d								Y
KY0080845	Great Oaks WWTF	McCracken	001-1	03/31/2018	BOD, carbonaceous [5 day,	80082-1-0	Effluent Gross				8.506	lb/d	lb/d								N
KY0080845	Great Oaks WWTF	McCracken	001-1	03/31/2018	BOD, carbonaceous [5 day,	80082-1-0	Effluent Gross	240								34	mg/L			mg/L	Y
KY0080845	Great Oaks WWTF	McCracken	001-1	03/31/2018	BOD, carbonaceous [5 day,	80082-1-0	Effluent Gross	127										34	mg/L	mg/L	Y
KY0080845	Great Oaks WWTF	McCracken	001-1	02/28/2018	BOD, carbonaceous [5 day,	80082-1-0	Effluent Gross		2.126	lb/d			lb/d								N
KY0080845	Great Oaks WWTF	McCracken	001-1	02/28/2018	BOD, carbonaceous [5 day,	80082-1-0	Effluent Gross				2.126	lb/d	lb/d								N
KY0080845	Great Oaks WWTF	McCracken	001-1	02/28/2018	BOD, carbonaceous [5 day,	80082-1-0	Effluent Gross									5	mg/L			mg/L	N
KY0080845	Great Oaks WWTF	McCracken	001-1	02/28/2018	BOD, carbonaceous [5 day,	80082-1-0	Effluent Gross											5	mg/L	mg/L	N
KY0080845	Great Oaks WWTF	McCracken	001-1	01/31/2018	BOD, carbonaceous [5 day,	80082-1-0	Effluent Gross		1.376	lb/d			lb/d								N
KY0080845	Great Oaks WWTF	McCracken	001-1	01/31/2018	BOD, carbonaceous [5 day,	80082-1-0	Effluent Gross				1.376	lb/d	lb/d								N
KY0080845	Great Oaks WWTF	McCracken	001-1	01/31/2018	BOD, carbonaceous [5 day,	80082-1-0	Effluent Gross									5	mg/L			mg/L	N
KY0080845	Great Oaks WWTF	McCracken	001-1	01/31/2018	BOD, carbonaceous [5 day,	80082-1-0	Effluent Gross											5	mg/L	mg/L	N
KY0080845	Great Oaks WWTF	McCracken	001-1	12/31/2017	BOD, carbonaceous [5 day,	80082-1-0	Effluent Gross		1.251	lb/d			lb/d								N
KY0080845	Great Oaks WWTF	McCracken	001-1	12/31/2017	BOD, carbonaceous [5 day,	80082-1-0	Effluent Gross				1.251	lb/d	lb/d								N
KY0080845	Great Oaks WWTF	McCracken	001-1	12/31/2017	BOD, carbonaceous [5 day,	80082-1-0	Effluent Gross									5	mg/L			mg/L	N
KY0080845	Great Oaks WWTF	McCracken	001-1	12/31/2017	BOD, carbonaceous [5 day,	80082-1-0	Effluent Gross											5	mg/L	mg/L	N
KY0080845	Great Oaks WWTF	McCracken	001-1	11/30/2017	BOD, carbonaceous [5 day,	80082-1-0	Effluent Gross		1.376	lb/d			lb/d								N
KY0080845	Great Oaks WWTF	McCracken	001-1	11/30/2017	BOD, carbonaceous [5 day,	80082-1-0	Effluent Gross				1.376	lb/d	lb/d								N
KY0080845	Great Oaks WWTF	McCracken	001-1	11/30/2017	BOD, carbonaceous [5 day,	80082-1-0	Effluent Gross									5	mg/L			mg/L	N
KY0080845	Great Oaks WWTF	McCracken	001-1	11/30/2017	BOD, carbonaceous [5 day,	80082-1-0	Effluent Gross											5	mg/L	mg/L	N
KY0080845	Great Oaks WWTF	McCracken	001-1	10/31/2017	BOD, carbonaceous [5 day,	80082-1-0	Effluent Gross		1.042	lb/d			lb/d								N
KY0080845	Great Oaks WWTF	McCracken	001-1	10/31/2017	BOD, carbonaceous [5 day,	80082-1-0	Effluent Gross				1.042	lb/d	lb/d								N
KY0080845	Great Oaks WWTF	McCracken	001-1	10/31/2017	BOD, carbonaceous [5 day,	80082-1-0	Effluent Gross									5	mg/L			mg/L	N
KY0080845	Great Oaks WWTF	McCracken	001-1	10/31/2017	BOD, carbonaceous [5 day,	80082-1-0	Effluent Gross											5	mg/L	mg/L	N
KY0080845	Great Oaks WWTF	McCracken	001-1	09/30/2017	BOD, carbonaceous [5 day,	80082-1-0	Effluent Gross		1.251	lb/d			lb/d								N
KY0080845	Great Oaks WWTF	McCracken	001-1	09/30/2017	BOD, carbonaceous [5 day,	80082-1-0	Effluent Gross				1.251	lb/d	lb/d								N
KY0080845	Great Oaks WWTF	McCracken	001-1	09/30/2017	BOD, carbonaceous [5 day,	80082-1-0	Effluent Gross									5	mg/L			mg/L	N
KY0080845	Great Oaks WWTF	McCracken	001-1	09/30/2017	BOD, carbonaceous [5 day,	80082-1-0	Effluent Gross											5	mg/L	mg/L	N
KY0080845	Great Oaks WWTF	McCracken	001-1	08/31/2017	BOD, carbonaceous [5 day,	80082-1-0	Effluent Gross		1.542	lb/d			lb/d								N
KY0080845	Great Oaks WWTF	McCracken	001-1	08/31/2017	BOD, carbonaceous [5 day,	80082-1-0	Effluent Gross				1.542	lb/d	lb/d								N
KY0080845	Great Oaks WWTF	McCracken	001-1	08/31/2017	BOD, carbonaceous [5 day,	80082-1-0	Effluent Gross									5	mg/L			mg/L	N
KY0080845	Great Oaks WWTF	McCracken	001-1	08/31/2017	BOD, carbonaceous [5 day,	80082-1-0	Effluent Gross											5	mg/L	mg/L	N
KY0080845	Great Oaks WWTF	McCracken	001-1	07/31/2017	BOD, carbonaceous [5 day,	80082-1-0	Effluent Gross		1.267	lb/d			lb/d								N
KY0080845	Great Oaks WWTF	McCracken	001-1	07/31/2017	BOD, carbonaceous [5 day,	80082-1-0	Effluent Gross				1.267	lb/d	lb/d								N
KY0080845	Great Oaks WWTF	McCracken	001-1	07/31/2017	BOD, carbonaceous [5 day,	80082-1-0	Effluent Gross									7.6	mg/L			mg/L	N
KY0080845	Great Oaks WWTF	McCracken	001-1	07/31/2017	BOD, carbonaceous [5 day,	80082-1-0	Effluent Gross											7.6	mg/L	mg/L	N
KY0080845	Great Oaks WWTF	McCracken	001-1	06/30/2017	BOD, carbonaceous [5 day,	80082-1-0	Effluent Gross		1.0425	lb/d			lb/d								N
KY0080845	Great Oaks WWTF	McCracken	001-1	06/30/2017	BOD, carbonaceous [5 day,	80082-1-0	Effluent Gross				1.0425	lb/d	lb/d								N
KY0080845	Great Oaks WWTF	McCracken	001-1	06/30/2017	BOD, carbonaceous [5 day,	80082-1-0	Effluent Gross									5	mg/L			mg/L	N
KY0080845	Great Oaks WWTF	McCracken	001-1	06/30/2017	BOD, carbonaceous [5 day,	80082-1-0	Effluent Gross											5	mg/L	mg/L	N
KY0080845	Great Oaks WWTF	McCracken	001-1	05/31/2017	BOD, carbonaceous [5 day,	80082-1-0	Effluent Gross		1.251	lb/d			lb/d								N
KY0080845	Great Oaks WWTF	McCracken	001-1	05/31/2017	BOD, carbonaceous [5 day,	80082-1-0	Effluent Gross				1.251	lb/d	lb/d								N
KY0080845	Great Oaks WWTF	McCracken	001-1	05/31/2017	BOD, carbonaceous [5 day,	80082-1-0	Effluent Gross									5	mg/L			mg/L	N
KY0080845	Great Oaks WWTF	McCracken	001-1	05/31/2017	BOD, carbonaceous [5 day,	80082-1-0	Effluent Gross											5	mg/L	mg/L	N
KY0080845	Great Oaks WWTF	McCracken	001-1	04/30/2017	BOD, carbonaceous [5 day,	80082-1-0	Effluent Gross		1.5429	lb/d			lb/d								N
KY0080845	Great Oaks WWTF	McCracken	001-1	04/30/2017	BOD, carbonaceous [5 day,	80082-1-0	Effluent Gross				1.5429	lb/d	lb/d								N
KY0080845	Great Oaks WWTF	McCracken	001-1	04/30/2017	BOD, carbonaceous [5 day,	80082-1-0	Effluent Gross									5	mg/L			mg/L	N
KY0080845	Great Oaks WWTF	McCracken	001-1	04/30/2017	BOD, carbonaceous [5 day,	80082-1-0	Effluent Gross											5	mg/L	mg/L	N
KY0080845	Great Oaks WWTF	McCracken	001-1	03/31/2017	BOD, carbonaceous [5 day,	80082-1-0	Effluent Gross		1.876	lb/d			lb/d								N
KY0080845	Great Oaks WWTF	McCracken	001-1	03/31/2017	BOD, carbonaceous [5 day,	80082-1-0	Effluent Gross				1.876	lb/d	lb/d								N
KY0080845	Great Oaks WWTF	McCracken	001-1	03/31/2017	BOD, carbonaceous [5 day,	80082-1-0	Effluent Gross									5	mg/L			mg/L	N
KY0080845	Great Oaks WWTF	McCracken	001-1	03/31/2017	BOD, carbonaceous [5 day,	80082-1-0	Effluent Gross											5	mg/L	mg/L	N
KY0080845	Great Oaks WWTF	McCracken	001-1	02/28/2017	BOD, carbonaceous [5 day,	80082-1-0	Effluent Gross		1.251	lb/d			lb/d								N
KY0080845	Great Oaks WWTF	McCracken	001-1	02/28/2017	BOD, carbonaceous [5 day,	80082-1-0	Effluent Gross				1.251	lb/d	lb/d								N
KY0080845	Great Oaks WWTF	McCracken	001-1	02/28/2017	BOD, carbonaceous [5 day,	80082-1-0	Effluent Gross									5	mg/L			mg/L	N
KY0080845	Great Oaks WWTF	McCracken	001-1	02/28/2017	BOD, carbonaceous [5 day,	80082-1-0	Effluent Gross											5	mg/L	mg/L	N
KY0080845	Great Oaks WWTF	McCracken	001-1	01/31/2017	BOD, carbonaceous [5 day,	80082-1-0	Effluent Gross		1.459	lb/d			lb/d								N
KY0080845	Great Oaks WWTF	McCracken	001-1	01/31/2017	BOD, carbonaceous [5 day,	80082-1-0	Effluent Gross				1.459	lb/d	lb/d								N
KY0080845	Great Oaks WWTF	McCracken	001-1	01/31/2017	BOD, carbonaceous [5 day,	80082-1-0	Effluent Gross									5	mg/L			mg/L	N
KY0080845	Great Oaks WWTF	McCracken	001-1	01/31/2017	BOD, carbonaceous [5 day,	80082-1-0	Effluent Gross											5	mg/L	mg/L	N
KY0080845	Great Oaks WWTF	McCracken	001-1	12/31/2016	BOD, carbonaceous [5 day,	80082-1-0	Effluent Gross		1.125	lb/d			lb/d								N
KY0080845	Great Oaks WWTF	McCracken	001-1	12/31/2016	BOD, carbonaceous [5 day,	80082-1-0	Effluent Gross				1.125	lb/d	lb/d								N
KY0080845	Great Oaks WWTF	McCracken	001-1	12/31/2016	BOD, carbonaceous [5 day,	80082-1-0	Effluent Gross									5	mg/L			mg/L	N
KY0080845	Great Oaks WWTF	McCracken	001-1	12/31/2016	BOD, carbonaceous [5 day,	80082-1-0	Effluent Gross											5	mg/L	mg/L	N
KY0080845	Great Oaks WWTF	McCracken	001-1	11/30/2016	BOD, carbonaceous [5 day,	80082-1-0	Effluent Gross		2.085	lb/d			lb/d								N
KY0080845	Great Oaks WWTF	McCracken	001-1	11/30/2016	BOD, carbonaceous [5 day,	80082-1-0	Effluent Gross				2.085	lb/d	lb/d								N
KY0080845	Great Oaks WWTF	McCracken	001-1	11/30/2016	BOD, carbonaceous [5 day,	80082-1-0	Effluent Gross									5	mg/L			mg/L	N
KY0080845	Great Oaks WWTF	McCracken	001-1	11/30/2016	BOD, carbonaceous [5 day,	80082-1-0	Effluent Gross											5	mg/L	mg/L	N
KY0080845	Great Oaks WWTF	McCracken	001-1	10/31/2016	BOD, carbonaceous [5 day,	80082-1-0	Effluent Gross		1.459	lb/d			lb/d								N
KY0080845	Great Oaks WWTF	McCracken	001-1	10/31/2016	BOD, carbonaceous [5 day,	80082-1-0	Effluent Gross				1.459	lb/d	lb/d								N
KY0080845	Great Oaks WWTF	McCracken	001-1	10/31/2016	BOD, carbonaceous [5 day,	80082-1-0	Effluent Gross									5	mg/L			mg/L	N
KY0080845	Great Oaks WWTF	McCracken	001-1	10/31/2016	BOD, carbonaceous [5 day,	80082-1-0	Effluent Gross											5	mg/L	mg/L	N
KY0080845	Great Oaks WWTF	McCracken	001-1	09/30/2016	BOD, carbonaceous [5 day,	80082-1-0	Effluent Gross		1.459	lb/d			lb/d								N
KY0080845	Great Oaks WWTF	McCracken	001-1	09/30/2016	BOD, carbonaceous [5 day,	80082-1-0	Effluent Gross				1.459	lb/d	lb/d								N
KY0080845	Great Oaks WWTF	McCracken	001-1	09/30/2016	BOD, carbonaceous [5 day,	80082-1-0	Effluent Gross									5	mg/L			mg/L	N
KY0080845	Great Oaks WWTF	McCracken	001-1	09/30/2016	BOD, carbonaceous [5 day,	80082-1-0	Effluent Gross											5	mg/L	mg/L	N
KY0080845	Great Oaks WWTF	McCracken	001-1	08/31/2016	BOD, carbonaceous [5 day,	80082-1-0	Effluent Gross		1.042	lb/d			lb/d								N
KY0080845	Great Oaks WWTF	McCracken	001-1	08/31/2016	BOD, carbonaceous [5 day,	80082-1-0	Effluent Gross				1.042	lb/d	lb/d								N
KY0080845	Great Oaks WWTF	McCracken	001-1	08/31/2016	BOD, carbonaceous [5 day,	80082-1-0	Effluent Gross									5	mg/L			mg/L	N
KY0080845	Great Oaks WWTF	McCracken	001-1	08/31/2016	BOD, carbonaceous [5 day,	80082-1-0	Effluent Gross											5	mg/L	mg/L	N
KY0080845	Great Oaks WWTF	McCracken	001-1	07/31/2016	BOD, carbonaceous [5 day,	80082-1-0	Effluent Gross		2.293	lb/d			lb/d								N
KY0080845	Great Oaks WWTF	McCracken	001-1	07/31/2016	BOD, carbonaceous [5 day,	80082-1-0	Effluent Gross				2.293	lb/d	lb/d								N
KY0080845	Great Oaks WWTF	McCracken	001-1	07/31/2016	BOD, carbonaceous [5 day,	80082-1-0	Effluent Gross									5	mg/L			mg/L	N
KY0080845	Great Oaks WWTF	McCracken	001-1	07/31/2016	BOD, carbonaceous [5 day,	80082-1-0	Effluent Gross											5	mg/L	mg/L	N
KY0080845	Great Oaks WWTF	McCracken	001-1	06/30/2016	BOD, carbonaceous [5 day,	80082-1-0	Effluent Gross		1.459	lb/d			lb/d								N
KY0080845	Great Oaks WWTF	McCracken	001-1	06/30/2016	BOD, carbonaceous [5 day,	80082-1-0	Effluent Gross				1.459	lb/d	lb/d								N
KY0080845	Great Oaks WWTF	McCracken	001-1	06/30/2016	BOD, carbonaceous [5 day,	80082-1-0	Effluent Gross									5	mg/L			mg/L	N
KY0080845	Great Oaks WWTF	McCracken	001-1	06/30/2016	BOD, carbonaceous [5 day,	80082-1-0	Effluent Gross											5	mg/L	mg/L	N
KY0080845	Great Oaks WWTF	McCracken	001-1	05/31/2016	BOD, carbonaceous [5 day,	80082-1-0	Effluent Gross		1.701	lb/d			lb/d								N
KY0080845	Great Oaks WWTF	McCracken	001-1	05/31/2016	BOD, carbonaceous [5 day,	80082-1-0	Effluent Gross				1.701	lb/d	lb/d								N
KY0080845	Great Oaks WWTF	McCracken	001-1	05/31/2016	BOD, carbonaceous [5 day,	80082-1-0	Effluent Gross									5.1	mg/L			mg/L	N
KY0080845	Great Oaks WWTF	McCracken	001-1	05/31/2016	BOD, carbonaceous [5 day,	80082-1-0	Effluent Gross											5.1	mg/L	mg/L	N
KY0080845	Great Oaks WWTF	McCracken	001-1	04/30/2016	BOD, carbonaceous [5 day,	80082-1-0	Effluent Gross		2.085	lb/d			lb/d								N
KY0080845	Great Oaks WWTF	McCracken	001-1	04/30/2016	BOD, carbonaceous [5 day,	80082-1-0	Effluent Gross				2.085	lb/d	lb/d								N
KY0080845	Great Oaks WWTF	McCracken	001-1	04/30/2016	BOD, carbonaceous [5 day,	80082-1-0	Effluent Gross									5	mg/L			mg/L	N
KY0080845	Great Oaks WWTF	McCracken	001-1	04/30/2016	BOD, carbonaceous [5 day,	80082-1-0	Effluent Gross											5	mg/L	mg/L	N
KY0080845	Great Oaks WWTF	McCracken	001-1	03/31/2016	BOD, carbonaceous [5 day,	80082-1-0	Effluent Gross		2.085	lb/d			lb/d								N
KY0080845	Great Oaks WWTF	McCracken	001-1	03/31/2016	BOD, carbonaceous [5 day,	80082-1-0	Effluent Gross				2.085	lb/d	lb/d								N
KY0080845	Great Oaks WWTF	McCracken	001-1	03/31/2016	BOD, carbonaceous [5 day,	80082-1-0	Effluent Gross									5	mg/L			mg/L	N
KY0080845	Great Oaks WWTF	McCracken	001-1	03/31/2016	BOD, carbonaceous [5 day,	80082-1-0	Effluent Gross											5	mg/L	mg/L	N
KY0080845	Great Oaks WWTF	McCracken	001-1	02/29/2016	BOD, carbonaceous [5 day,	80082-1-0	Effluent Gross		5.671	lb/d			lb/d								N
KY0080845	Great Oaks WWTF	McCracken	001-1	02/29/2016	BOD, carbonaceous [5 day,	80082-1-0	Effluent Gross				5.671	lb/d	lb/d								N
KY0080845	Great Oaks WWTF	McCracken	001-1	02/29/2016	BOD, carbonaceous [5 day,	80082-1-0	Effluent Gross	70								17	mg/L			mg/L	Y
KY0080845	Great Oaks WWTF	McCracken	001-1	02/29/2016	BOD, carbonaceous [5 day,	80082-1-0	Effluent Gross	13										17	mg/L	mg/L	Y
KY0080845	Great Oaks WWTF	McCracken	001-1	01/31/2016	BOD, carbonaceous [5 day,	80082-1-0	Effluent Gross		1.042	lb/d			lb/d								N
KY0080845	Great Oaks WWTF	McCracken	001-1	01/31/2016	BOD, carbonaceous [5 day,	80082-1-0	Effluent Gross				1.042	lb/d	lb/d								N
KY0080845	Great Oaks WWTF	McCracken	001-1	01/31/2016	BOD, carbonaceous [5 day,	80082-1-0	Effluent Gross									5	mg/L			mg/L	N
KY0080845	Great Oaks WWTF	McCracken	001-1	01/31/2016	BOD, carbonaceous [5 day,	80082-1-0	Effluent Gross											5	mg/L	mg/L	N
KY0080845	Great Oaks WWTF	McCracken	001-1	12/31/2015	BOD, carbonaceous [5 day,	80082-1-0	Effluent Gross		1.668	lb/d			lb/d								N
KY0080845	Great Oaks WWTF	McCracken	001-1	12/31/2015	BOD, carbonaceous [5 day,	80082-1-0	Effluent Gross				1.668	lb/d	lb/d								N
KY0080845	Great Oaks WWTF	McCracken	001-1	12/31/2015	BOD, carbonaceous [5 day,	80082-1-0	Effluent Gross									5	mg/L			mg/L	N
KY0080845	Great Oaks WWTF	McCracken	001-1	12/31/2015	BOD, carbonaceous [5 day,	80082-1-0	Effluent Gross											5	mg/L	mg/L	N
KY0080845	Great Oaks WWTF	McCracken	001-1	11/30/2015	BOD, carbonaceous [5 day,	80082-1-0	Effluent Gross		3.627	lb/d			lb/d								N
KY0080845	Great Oaks WWTF	McCracken	001-1	11/30/2015	BOD, carbonaceous [5 day,	80082-1-0	Effluent Gross				3.627	lb/d	lb/d								N

KY0080845	Great Oaks WWTF	McCracken	001-1	11/30/2015	BOD, carbonaceous [5 day,	80082-1-0	Effluent Gross	10								11	mg/L			mg/L	Y
KY0080845	Great Oaks WWTF	McCracken	001-1	11/30/2015	BOD, carbonaceous [5 day,	80082-1-0	Effluent Gross											11	mg/L	mg/L	N
KY0080845	Great Oaks WWTF	McCracken	001-1	10/31/2015	BOD, carbonaceous [5 day,	80082-1-0	Effluent Gross		1.751	lb/d			lb/d								N
KY0080845	Great Oaks WWTF	McCracken	001-1	10/31/2015	BOD, carbonaceous [5 day,	80082-1-0	Effluent Gross				1.751	lb/d	lb/d								N
KY0080845	Great Oaks WWTF	McCracken	001-1	10/31/2015	BOD, carbonaceous [5 day,	80082-1-0	Effluent Gross									5	mg/L			mg/L	N
KY0080845	Great Oaks WWTF	McCracken	001-1	10/31/2015	BOD, carbonaceous [5 day,	80082-1-0	Effluent Gross											5	mg/L	mg/L	N
KY0080845	Great Oaks WWTF	McCracken	001-1	09/30/2015	BOD, carbonaceous [5 day,	80082-1-0	Effluent Gross		2.1684	lb/d			lb/d								N
KY0080845	Great Oaks WWTF	McCracken	001-1	09/30/2015	BOD, carbonaceous [5 day,	80082-1-0	Effluent Gross				2.1684	lb/d	lb/d								N
KY0080845	Great Oaks WWTF	McCracken	001-1	09/30/2015	BOD, carbonaceous [5 day,	80082-1-0	Effluent Gross									5	mg/L			mg/L	N
KY0080845	Great Oaks WWTF	McCracken	001-1	09/30/2015	BOD, carbonaceous [5 day,	80082-1-0	Effluent Gross											5	mg/L	mg/L	N
KY0080845	Great Oaks WWTF	McCracken	001-1	08/31/2015	BOD, carbonaceous [5 day,	80082-1-0	Effluent Gross		1.334	lb/d			lb/d								N
KY0080845	Great Oaks WWTF	McCracken	001-1	08/31/2015	BOD, carbonaceous [5 day,	80082-1-0	Effluent Gross				1.334	lb/d	lb/d								N
KY0080845	Great Oaks WWTF	McCracken	001-1	08/31/2015	BOD, carbonaceous [5 day,	80082-1-0	Effluent Gross									5	mg/L			mg/L	N
KY0080845	Great Oaks WWTF	McCracken	001-1	08/31/2015	BOD, carbonaceous [5 day,	80082-1-0	Effluent Gross											5	mg/L	mg/L	N
KY0080845	Great Oaks WWTF	McCracken	001-1	07/31/2015	BOD, carbonaceous [5 day,	80082-1-0	Effluent Gross		1.251	lb/d			lb/d								N
KY0080845	Great Oaks WWTF	McCracken	001-1	07/31/2015	BOD, carbonaceous [5 day,	80082-1-0	Effluent Gross				1.251	lb/d	lb/d								N
KY0080845	Great Oaks WWTF	McCracken	001-1	07/31/2015	BOD, carbonaceous [5 day,	80082-1-0	Effluent Gross									5	mg/L			mg/L	N
KY0080845	Great Oaks WWTF	McCracken	001-1	07/31/2015	BOD, carbonaceous [5 day,	80082-1-0	Effluent Gross											5	mg/L	mg/L	N
KY0080845	Great Oaks WWTF	McCracken	001-1	06/30/2015	BOD, carbonaceous [5 day,	80082-1-0	Effluent Gross		1.459	lb/d			lb/d								N
KY0080845	Great Oaks WWTF	McCracken	001-1	06/30/2015	BOD, carbonaceous [5 day,	80082-1-0	Effluent Gross				1.459	lb/d	lb/d								N
KY0080845	Great Oaks WWTF	McCracken	001-1	06/30/2015	BOD, carbonaceous [5 day,	80082-1-0	Effluent Gross									5	mg/L			mg/L	N
KY0080845	Great Oaks WWTF	McCracken	001-1	06/30/2015	BOD, carbonaceous [5 day,	80082-1-0	Effluent Gross											5	mg/L	mg/L	N
KY0080845	Great Oaks WWTF	McCracken	001-1	05/31/2015	BOD, carbonaceous [5 day,	80082-1-0	Effluent Gross	29	7.506	lb/d			lb/d								Y
KY0080845	Great Oaks WWTF	McCracken	001-1	05/31/2015	BOD, carbonaceous [5 day,	80082-1-0	Effluent Gross				7.506	lb/d	lb/d								N
KY0080845	Great Oaks WWTF	McCracken	001-1	05/31/2015	BOD, carbonaceous [5 day,	80082-1-0	Effluent Gross	400								50	mg/L			mg/L	Y
KY0080845	Great Oaks WWTF	McCracken	001-1	05/31/2015	BOD, carbonaceous [5 day,	80082-1-0	Effluent Gross	233										50	mg/L	mg/L	Y
KY0080845	Great Oaks WWTF	McCracken	001-1	04/30/2015	BOD, carbonaceous [5 day,	80082-1-0	Effluent Gross		1.668	lb/d			lb/d								N
KY0080845	Great Oaks WWTF	McCracken	001-1	04/30/2015	BOD, carbonaceous [5 day,	80082-1-0	Effluent Gross				1.668	lb/d	lb/d								N
KY0080845	Great Oaks WWTF	McCracken	001-1	04/30/2015	BOD, carbonaceous [5 day,	80082-1-0	Effluent Gross									5	mg/L			mg/L	N
KY0080845	Great Oaks WWTF	McCracken	001-1	04/30/2015	BOD, carbonaceous [5 day,	80082-1-0	Effluent Gross											5	mg/L	mg/L	N
KY0080845	Great Oaks WWTF	McCracken	001-1	03/31/2015	BOD, carbonaceous [5 day,	80082-1-0	Effluent Gross		1.751	lb/d			lb/d								N
KY0080845	Great Oaks WWTF	McCracken	001-1	03/31/2015	BOD, carbonaceous [5 day,	80082-1-0	Effluent Gross				1.751	lb/d	lb/d								N
KY0080845	Great Oaks WWTF	McCracken	001-1	03/31/2015	BOD, carbonaceous [5 day,	80082-1-0	Effluent Gross									5	mg/L			mg/L	N
KY0080845	Great Oaks WWTF	McCracken	001-1	03/31/2015	BOD, carbonaceous [5 day,	80082-1-0	Effluent Gross											5	mg/L	mg/L	N
KY0080845	Great Oaks WWTF	McCracken	001-1	02/28/2015	BOD, carbonaceous [5 day,	80082-1-0	Effluent Gross		1.459	lb/d			lb/d								N
KY0080845	Great Oaks WWTF	McCracken	001-1	02/28/2015	BOD, carbonaceous [5 day,	80082-1-0	Effluent Gross				1.459	lb/d	lb/d								N
KY0080845	Great Oaks WWTF	McCracken	001-1	02/28/2015	BOD, carbonaceous [5 day,	80082-1-0	Effluent Gross									5	mg/L			mg/L	N
KY0080845	Great Oaks WWTF	McCracken	001-1	02/28/2015	BOD, carbonaceous [5 day,	80082-1-0	Effluent Gross											5	mg/L	mg/L	N
KY0080845	Great Oaks WWTF	McCracken	001-1	01/31/2015	BOD, carbonaceous [5 day,	80082-1-0	Effluent Gross		1.709	lb/d			lb/d								N
KY0080845	Great Oaks WWTF	McCracken	001-1	01/31/2015	BOD, carbonaceous [5 day,	80082-1-0	Effluent Gross				1.709	lb/d	lb/d								N
KY0080845	Great Oaks WWTF	McCracken	001-1	01/31/2015	BOD, carbonaceous [5 day,	80082-1-0	Effluent Gross									5	mg/L			mg/L	N
KY0080845	Great Oaks WWTF	McCracken	001-1	01/31/2015	BOD, carbonaceous [5 day,	80082-1-0	Effluent Gross											5	mg/L	mg/L	N
KY0080845	Great Oaks WWTF	McCracken	001-1	12/31/2014	BOD, carbonaceous [5 day,	80082-1-0	Effluent Gross		1.751	lb/d			lb/d								N
KY0080845	Great Oaks WWTF	McCracken	001-1	12/31/2014	BOD, carbonaceous [5 day,	80082-1-0	Effluent Gross				1.751	lb/d	lb/d								N
KY0080845	Great Oaks WWTF	McCracken	001-1	12/31/2014	BOD, carbonaceous [5 day,	80082-1-0	Effluent Gross									5	mg/L			mg/L	N
KY0080845	Great Oaks WWTF	McCracken	001-1	12/31/2014	BOD, carbonaceous [5 day,	80082-1-0	Effluent Gross											5	mg/L	mg/L	N
KY0080845	Great Oaks WWTF	McCracken	001-1	11/30/2014	BOD, carbonaceous [5 day,	80082-1-0	Effluent Gross		1.459	lb/d			lb/d								N
KY0080845	Great Oaks WWTF	McCracken	001-1	11/30/2014	BOD, carbonaceous [5 day,	80082-1-0	Effluent Gross				1.459	lb/d	lb/d								N
KY0080845	Great Oaks WWTF	McCracken	001-1	11/30/2014	BOD, carbonaceous [5 day,	80082-1-0	Effluent Gross									5	mg/L			mg/L	N
KY0080845	Great Oaks WWTF	McCracken	001-1	11/30/2014	BOD, carbonaceous [5 day,	80082-1-0	Effluent Gross											5	mg/L	mg/L	N
KY0080845	Great Oaks WWTF	McCracken	001-1	10/31/2014	BOD, carbonaceous [5 day,	80082-1-0	Effluent Gross		1.3344	lb/d			lb/d								N
KY0080845	Great Oaks WWTF	McCracken	001-1	10/31/2014	BOD, carbonaceous [5 day,	80082-1-0	Effluent Gross				1.3344	lb/d	lb/d								N
KY0080845	Great Oaks WWTF	McCracken	001-1	10/31/2014	BOD, carbonaceous [5 day,	80082-1-0	Effluent Gross									5	mg/L			mg/L	N
KY0080845	Great Oaks WWTF	McCracken	001-1	10/31/2014	BOD, carbonaceous [5 day,	80082-1-0	Effluent Gross											5	mg/L	mg/L	N

Non-Receipt Vio. Exists	DMR Received Date
N	9/30/2019
N	9/11/2019
Y	
Y	
Y	
Y	
N	5/28/2019
N	3/27/2019
N	2/27/2019
N	2/27/2019
N	12/31/2018
N	12/4/2018
N	11/5/2018
N	10/1/2018
N	8/28/2018
N	8/8/2018
N	6/26/2018
Y	
N	5/28/2018
N	3/26/2018
N	2/28/2018
N	1/11/2018
N	12/20/2017
N	11/28/2017
N	10/28/2017
N	9/27/2017
N	8/28/2017
N	7/26/2017
N	7/26/2017
Y	7/26/2017
N	4/28/2017
N	3/28/2017
Y	8/15/2017
N	1/16/2017
N	1/16/2017
Y	1/16/2017
N	10/29/2016
N	9/28/2016
N	8/27/2016
N	7/26/2016
N	6/28/2016
N	5/24/2016
N	4/28/2016
N	3/29/2016
N	2/10/2016
N	1/28/2016
N	12/28/2015
N	11/28/2015
N	10/28/2015
N	9/26/2015
N	8/13/2015
N	8/6/2015
N	6/26/2015
N	5/28/2015
N	4/12/2015
N	3/26/2015
N	2/18/2015
N	1/27/2015
N	12/26/2014
N	11/28/2014
N	9/30/2019
N	9/11/2019
Y	
Y	
Y	
Y	
N	5/28/2019
N	5/28/2019
N	3/27/2019
N	3/27/2019
N	2/27/2019
N	2/27/2019
N	2/27/2019
N	2/27/2019
N	12/31/2018
N	12/31/2018
N	12/4/2018
N	12/4/2018
N	11/5/2018
N	11/5/2018
N	10/1/2018
N	10/1/2018
N	8/28/2018
N	8/28/2018
N	8/8/2018
N	8/8/2018
N	6/26/2018
N	6/26/2018
Y	
N	5/28/2018
N	5/28/2018
N	3/26/2018
N	3/26/2018
N	2/28/2018
N	2/28/2018
N	1/11/2018
N	1/11/2018
N	12/20/2017
N	12/20/2017
N	11/28/2017
N	11/28/2017
N	10/28/2017
N	10/28/2017
N	9/27/2017
N	9/27/2017
N	8/28/2017
N	8/28/2017
N	7/26/2017
N	7/26/2017
N	7/26/2017

N	7/26/2017
Y	7/26/2017
Y	7/26/2017
N	4/28/2017
N	4/28/2017
N	3/28/2017
N	3/28/2017
Y	8/15/2017
Y	8/15/2017
N	1/16/2017
N	1/16/2017
N	1/16/2017
N	1/16/2017
Y	1/16/2017
Y	1/16/2017
N	10/29/2016
N	10/29/2016
N	9/28/2016
N	9/28/2016
N	8/27/2016
N	8/27/2016
N	7/26/2016
N	7/26/2016
N	6/28/2016
N	6/28/2016
N	5/24/2016
N	5/24/2016
N	4/28/2016
N	4/28/2016
N	3/29/2016
N	3/29/2016
N	2/10/2016
N	2/10/2016
N	1/28/2016
N	1/28/2016
N	12/28/2015
N	12/28/2015
N	11/28/2015
N	11/28/2015
N	10/28/2015
N	10/28/2015
N	9/26/2015
N	9/26/2015
N	8/13/2015
N	8/13/2015
N	8/6/2015
N	8/6/2015
N	6/26/2015
N	6/26/2015
N	5/28/2015
N	5/28/2015
N	4/12/2015
N	4/12/2015
N	3/26/2015
N	3/26/2015
N	2/18/2015
N	2/18/2015
N	1/27/2015
N	1/27/2015
N	12/26/2014
N	12/26/2014
N	11/28/2014
N	11/28/2014
N	9/30/2019
N	9/30/2019
N	9/11/2019
N	9/11/2019
Y	
Y	
Y	
Y	
Y	
Y	
Y	
Y	
N	5/28/2019
N	5/28/2019
N	5/28/2019
N	5/28/2019
N	3/27/2019
N	3/27/2019
N	3/27/2019
N	3/27/2019
N	2/27/2019
N	2/27/2019
N	2/27/2019
N	2/27/2019
N	2/27/2019
N	2/27/2019
N	2/27/2019
N	12/31/2018
N	12/31/2018
N	12/31/2018
N	12/31/2018
N	12/4/2018
N	12/4/2018
N	12/4/2018
N	12/4/2018
N	11/5/2018
N	11/5/2018
N	11/5/2018
N	11/5/2018
N	10/1/2018
N	10/1/2018
N	10/1/2018
N	10/1/2018
N	8/28/2018
N	8/28/2018
N	8/28/2018
N	8/28/2018
N	8/8/2018
N	8/8/2018
N	8/8/2018

N	8/8/2018
N	6/26/2018
N	6/26/2018
N	6/26/2018
N	6/26/2018
Y	
Y	
N	5/28/2018
N	5/28/2018
N	5/28/2018
N	5/28/2018
N	3/26/2018
N	3/26/2018
N	3/26/2018
N	3/26/2018
N	2/28/2018
N	2/28/2018
N	2/28/2018
N	2/28/2018
N	1/11/2018
N	1/11/2018
N	1/11/2018
N	1/11/2018
N	12/20/2017
N	12/20/2017
N	12/20/2017
N	12/20/2017
N	11/28/2017
N	11/28/2017
N	11/28/2017
N	11/28/2017
N	10/28/2017
N	10/28/2017
N	10/28/2017
N	10/28/2017
N	9/27/2017
N	9/27/2017
N	9/27/2017
N	9/27/2017
N	8/28/2017
N	8/28/2017
N	8/28/2017
N	8/28/2017
N	7/26/2017
N	7/26/2017
N	7/26/2017
N	7/26/2017
N	7/26/2017
N	7/26/2017
N	7/26/2017
N	7/26/2017
Y	7/26/2017
Y	7/26/2017
Y	7/26/2017
Y	7/26/2017
N	4/28/2017
N	4/28/2017
N	4/28/2017
N	4/28/2017
N	4/28/2017
N	4/28/2017
N	4/28/2017
N	3/28/2017
N	3/28/2017
N	3/28/2017
N	3/28/2017
Y	8/15/2017
Y	8/15/2017
Y	8/15/2017
Y	8/15/2017
N	1/16/2017
N	1/16/2017
N	1/16/2017
N	1/16/2017
N	1/16/2017
N	1/16/2017
N	1/16/2017
N	1/16/2017
N	1/16/2017
Y	1/16/2017
Y	1/16/2017
Y	1/16/2017
Y	1/16/2017
N	10/29/2016
N	10/29/2016
N	10/29/2016
N	10/29/2016
N	9/28/2016
N	9/28/2016
N	9/28/2016
N	9/28/2016
N	8/27/2016
N	8/27/2016
N	8/27/2016
N	8/27/2016
N	7/26/2016
N	7/26/2016
N	7/26/2016
N	7/26/2016
N	6/28/2016
N	6/28/2016
N	6/28/2016
N	6/28/2016
N	5/24/2016
N	5/24/2016
N	5/24/2016
N	5/24/2016
N	4/28/2016
N	4/28/2016
N	4/28/2016
N	4/28/2016
N	3/29/2016
N	3/29/2016
N	3/29/2016
N	3/29/2016
N	2/10/2016
N	2/10/2016
N	2/10/2016

N	2/10/2016
N	1/28/2016
N	1/28/2016
N	1/28/2016
N	1/28/2016
N	12/28/2015
N	12/28/2015
N	12/28/2015
N	12/28/2015
N	11/28/2015
N	11/28/2015
N	11/28/2015
N	11/28/2015
N	10/28/2015
N	10/28/2015
N	10/28/2015
N	10/28/2015
N	9/26/2015
N	9/26/2015
N	9/26/2015
N	9/26/2015
N	8/13/2015
N	8/13/2015
N	8/13/2015
N	8/13/2015
N	8/6/2015
N	8/6/2015
N	8/6/2015
N	8/6/2015
N	6/26/2015
N	6/26/2015
N	6/26/2015
N	6/26/2015
N	5/28/2015
N	5/28/2015
N	5/28/2015
N	5/28/2015
N	4/12/2015
N	4/12/2015
N	4/12/2015
N	4/12/2015
N	3/26/2015
N	3/26/2015
N	3/26/2015
N	3/26/2015
N	2/18/2015
N	2/18/2015
N	2/18/2015
N	2/18/2015
N	1/27/2015
N	1/27/2015
N	1/27/2015
N	1/27/2015
N	12/26/2014
N	12/26/2014
N	12/26/2014
N	12/26/2014
N	11/28/2014
N	11/28/2014
N	11/28/2014
N	11/28/2014
N	11/28/2014
N	9/30/2019
N	9/30/2019
N	9/11/2019
N	9/11/2019
Y	
Y	
Y	
Y	
Y	
Y	
N	12/4/2018
N	12/4/2018
N	12/4/2018
N	12/4/2018
N	11/5/2018
N	11/5/2018
N	11/5/2018
N	11/5/2018
N	10/1/2018
N	10/1/2018
N	10/1/2018
N	10/1/2018
N	8/28/2018
N	8/28/2018
N	8/28/2018
N	8/28/2018
N	8/8/2018
N	8/8/2018
N	8/8/2018
N	8/8/2018
N	6/26/2018
N	6/26/2018
N	6/26/2018
N	6/26/2018
N	11/28/2017
N	11/28/2017
N	11/28/2017
N	11/28/2017
N	10/28/2017
N	10/28/2017
N	10/28/2017
N	10/28/2017
N	9/27/2017
N	9/27/2017
N	9/27/2017
N	9/27/2017
N	8/28/2017
N	8/28/2017
N	8/28/2017
N	8/28/2017
N	7/26/2017
N	7/26/2017
N	7/26/2017

N	7/26/2017
N	7/26/2017
N	7/26/2017
N	7/26/2017
N	7/26/2017
Y	1/16/2017
Y	1/16/2017
Y	1/16/2017
Y	1/16/2017
N	10/29/2016
N	10/29/2016
N	10/29/2016
N	10/29/2016
N	9/28/2016
N	9/28/2016
N	9/28/2016
N	9/28/2016
N	8/27/2016
N	8/27/2016
N	8/27/2016
N	8/27/2016
N	7/26/2016
N	7/26/2016
N	7/26/2016
N	7/26/2016
N	6/28/2016
N	6/28/2016
N	6/28/2016
N	6/28/2016
N	11/28/2015
N	11/28/2015
N	11/28/2015
N	11/28/2015
N	10/28/2015
N	10/28/2015
N	10/28/2015
N	10/28/2015
N	9/26/2015
N	9/26/2015
N	9/26/2015
N	9/26/2015
N	8/13/2015
N	8/13/2015
N	8/13/2015
N	8/13/2015
N	8/6/2015
N	8/6/2015
N	8/6/2015
N	8/6/2015
N	6/26/2015
N	6/26/2015
N	6/26/2015
N	6/26/2015
N	11/28/2014
N	11/28/2014
N	11/28/2014
N	11/28/2014
Y	
Y	
N	5/28/2019
N	5/28/2019
N	5/28/2019
N	5/28/2019
N	3/27/2019
N	3/27/2019
N	3/27/2019
N	3/27/2019
N	2/27/2019
N	2/27/2019
N	2/27/2019
N	2/27/2019
N	2/27/2019
N	2/27/2019
N	2/27/2019
N	2/27/2019
N	12/31/2018
N	12/31/2018
N	12/31/2018
N	12/31/2018
Y	
Y	
N	5/28/2018
N	5/28/2018
N	5/28/2018
N	5/28/2018
N	3/26/2018
N	3/26/2018
N	3/26/2018
N	3/26/2018
N	2/28/2018
N	2/28/2018
N	2/28/2018
N	2/28/2018
N	1/11/2018
N	1/11/2018
N	1/11/2018
N	1/11/2018
N	12/20/2017
N	12/20/2017
N	12/20/2017
N	12/20/2017
Y	7/26/2017
Y	7/26/2017
Y	7/26/2017
Y	7/26/2017
N	4/28/2017
N	4/28/2017
N	4/28/2017
N	4/28/2017
N	3/28/2017
N	3/28/2017
N	3/28/2017
N	3/28/2017
Y	8/15/2017

Y	8/15/2017
Y	8/15/2017
Y	8/15/2017
N	1/16/2017
N	1/16/2017
N	1/16/2017
N	1/16/2017
N	1/16/2017
N	1/16/2017
N	1/16/2017
N	1/16/2017
N	5/24/2016
N	5/24/2016
N	5/24/2016
N	5/24/2016
N	4/28/2016
N	4/28/2016
N	4/28/2016
N	4/28/2016
N	3/29/2016
N	3/29/2016
N	3/29/2016
N	3/29/2016
N	2/10/2016
N	2/10/2016
N	2/10/2016
N	2/10/2016
N	1/28/2016
N	1/28/2016
N	1/28/2016
N	1/28/2016
N	12/28/2015
N	12/28/2015
N	12/28/2015
N	12/28/2015
N	5/28/2015
N	5/28/2015
N	5/28/2015
N	5/28/2015
N	4/12/2015
N	4/12/2015
N	4/12/2015
N	4/12/2015
N	3/26/2015
N	3/26/2015
N	3/26/2015
N	3/26/2015
N	2/18/2015
N	2/18/2015
N	2/18/2015
N	2/18/2015
N	1/27/2015
N	1/27/2015
N	1/27/2015
N	1/27/2015
N	12/26/2014
N	12/26/2014
N	12/26/2014
N	12/26/2014
N	12/26/2014
N	12/26/2014
N	12/26/2014
N	9/30/2019
N	9/11/2019
Y	
Y	
Y	
Y	
N	5/28/2019
N	5/28/2019
N	3/27/2019
N	3/27/2019
N	2/27/2019
N	2/27/2019
N	2/27/2019
N	2/27/2019
N	12/31/2018
N	12/31/2018
N	12/4/2018
N	12/4/2018
N	11/5/2018
N	11/5/2018
N	10/1/2018
N	10/1/2018
N	8/28/2018
N	8/28/2018
N	8/8/2018
N	8/8/2018
N	6/26/2018
N	6/26/2018
Y	
N	5/28/2018
N	5/28/2018
N	3/26/2018
N	3/26/2018
N	2/28/2018
N	2/28/2018
N	1/11/2018
N	1/11/2018
N	12/20/2017
N	12/20/2017
N	11/28/2017
N	11/28/2017
N	10/28/2017
N	10/28/2017
N	9/27/2017
N	9/27/2017
N	8/28/2017
N	8/28/2017
N	7/26/2017
N	7/26/2017
N	7/26/2017
N	7/26/2017
Y	7/26/2017
Y	7/26/2017
N	4/28/2017
N	4/28/2017

N	3/28/2017
N	3/28/2017
Y	8/15/2017
Y	8/15/2017
N	1/16/2017
N	1/16/2017
N	1/16/2017
N	1/16/2017
Y	1/16/2017
Y	1/16/2017
N	10/29/2016
N	10/29/2016
N	9/28/2016
N	9/28/2016
N	8/27/2016
N	8/27/2016
N	7/26/2016
N	7/26/2016
N	6/28/2016
N	6/28/2016
N	5/24/2016
N	5/24/2016
N	4/28/2016
N	4/28/2016
N	3/29/2016
N	3/29/2016
N	2/10/2016
N	2/10/2016
N	1/28/2016
N	1/28/2016
N	12/28/2015
N	12/28/2015
N	11/28/2015
N	11/28/2015
N	10/28/2015
N	10/28/2015
N	9/26/2015
N	9/26/2015
N	8/13/2015
N	8/13/2015
N	8/6/2015
N	8/6/2015
N	6/26/2015
N	6/26/2015
N	5/28/2015
N	5/28/2015
N	4/12/2015
N	4/12/2015
N	3/26/2015
N	3/26/2015
N	2/18/2015
N	2/18/2015
N	1/27/2015
N	1/27/2015
N	12/26/2014
N	12/26/2014
N	11/28/2014
N	11/28/2014
N	11/28/2014
N	9/30/2019
N	9/11/2019
Y	
Y	
Y	
Y	
N	5/28/2019
N	5/28/2019
N	3/27/2019
N	3/27/2019
N	2/27/2019
N	2/27/2019
N	2/27/2019
N	2/27/2019
N	12/31/2018
N	12/31/2018
N	12/4/2018
N	12/4/2018
N	11/5/2018
N	11/5/2018
N	10/1/2018
N	10/1/2018
N	8/28/2018
N	8/28/2018
N	8/8/2018
N	8/8/2018
N	6/26/2018
N	6/26/2018
Y	
N	5/28/2018
N	5/28/2018
N	3/26/2018
N	3/26/2018
N	2/28/2018
N	2/28/2018
N	1/11/2018
N	1/11/2018
N	12/20/2017
N	12/20/2017
N	11/28/2017
N	11/28/2017
N	10/28/2017
N	10/28/2017
N	9/27/2017
N	9/27/2017
N	8/28/2017
N	8/28/2017
N	7/26/2017
N	7/26/2017
N	7/26/2017
N	7/26/2017
Y	7/26/2017
Y	7/26/2017
N	4/28/2017
N	4/28/2017
N	3/28/2017

N	3/28/2017
Y	8/15/2017
Y	8/15/2017
N	1/16/2017
N	1/16/2017
N	1/16/2017
N	1/16/2017
Y	1/16/2017
Y	1/16/2017
N	10/29/2016
N	10/29/2016
N	9/28/2016
N	9/28/2016
N	8/27/2016
N	8/27/2016
N	7/26/2016
N	7/26/2016
N	6/28/2016
N	6/28/2016
N	5/24/2016
N	5/24/2016
N	4/28/2016
N	4/28/2016
N	3/29/2016
N	3/29/2016
N	2/10/2016
N	2/10/2016
N	1/28/2016
N	1/28/2016
N	12/28/2015
N	12/28/2015
N	11/28/2015
N	11/28/2015
N	10/28/2015
N	10/28/2015
N	9/26/2015
N	9/26/2015
N	8/13/2015
N	8/13/2015
N	8/6/2015
N	8/6/2015
N	6/26/2015
N	6/26/2015
N	5/28/2015
N	5/28/2015
N	4/12/2015
N	4/12/2015
N	3/26/2015
N	3/26/2015
N	2/18/2015
N	2/18/2015
N	1/27/2015
N	1/27/2015
N	12/26/2014
N	12/26/2014
N	11/28/2014
N	11/28/2014
N	9/30/2019
N	9/11/2019
Y	
Y	
Y	
Y	
N	5/28/2019
N	5/28/2019
N	3/27/2019
N	3/27/2019
N	2/27/2019
N	2/27/2019
N	2/27/2019
N	2/27/2019
N	12/31/2018
N	12/31/2018
N	12/4/2018
N	12/4/2018
N	11/5/2018
N	11/5/2018
N	10/1/2018
N	10/1/2018
N	8/28/2018
N	8/28/2018
N	8/8/2018
N	8/8/2018
N	6/26/2018
N	6/26/2018
Y	
N	5/28/2018
N	5/28/2018
N	3/26/2018
N	3/26/2018
N	2/28/2018
N	2/28/2018
N	1/11/2018
N	1/11/2018
N	12/20/2017
N	12/20/2017
N	11/28/2017
N	11/28/2017
N	10/28/2017
N	10/28/2017
N	9/27/2017
N	9/27/2017
N	8/28/2017
N	8/28/2017
N	7/26/2017
N	7/26/2017
N	7/26/2017
N	7/26/2017
Y	7/26/2017
Y	7/26/2017
N	4/28/2017
N	4/28/2017
N	3/28/2017
N	3/28/2017

Y	8/15/2017
Y	8/15/2017
N	1/16/2017
N	1/16/2017
N	1/16/2017
N	1/16/2017
Y	1/16/2017
Y	1/16/2017
N	10/29/2016
N	10/29/2016
N	9/28/2016
N	9/28/2016
N	8/27/2016
N	8/27/2016
N	7/26/2016
N	7/26/2016
N	6/28/2016
N	6/28/2016
N	5/24/2016
N	5/24/2016
N	4/28/2016
N	4/28/2016
N	3/29/2016
N	3/29/2016
N	2/10/2016
N	2/10/2016
N	1/28/2016
N	1/28/2016
N	12/28/2015
N	12/28/2015
N	11/28/2015
N	11/28/2015
N	10/28/2015
N	10/28/2015
N	9/26/2015
N	9/26/2015
N	8/13/2015
N	8/13/2015
N	8/6/2015
N	8/6/2015
N	6/26/2015
N	6/26/2015
N	5/28/2015
N	5/28/2015
N	4/12/2015
N	4/12/2015
N	3/26/2015
N	3/26/2015
N	2/18/2015
N	2/18/2015
N	1/27/2015
N	1/27/2015
N	12/26/2014
N	12/26/2014
N	11/28/2014
N	11/28/2014
N	9/30/2019
N	9/30/2019
N	9/11/2019
N	9/11/2019
Y	
Y	
Y	
Y	
Y	
Y	
Y	
Y	
N	5/28/2019
N	5/28/2019
N	5/28/2019
N	5/28/2019
N	3/27/2019
N	3/27/2019
N	3/27/2019
N	3/27/2019
N	2/27/2019
N	2/27/2019
N	2/27/2019
N	2/27/2019
N	2/27/2019
N	2/27/2019
N	2/27/2019
N	12/31/2018
N	12/31/2018
N	12/31/2018
N	12/31/2018
N	12/4/2018
N	12/4/2018
N	12/4/2018
N	12/4/2018
N	11/5/2018
N	11/5/2018
N	11/5/2018
N	11/5/2018
N	10/1/2018
N	10/1/2018
N	10/1/2018
N	10/1/2018
N	8/28/2018
N	8/28/2018
N	8/28/2018
N	8/28/2018
N	8/8/2018
N	8/8/2018
N	8/8/2018
N	8/8/2018
N	6/26/2018
N	6/26/2018
N	6/26/2018
N	6/26/2018
Y	
Y	

N	5/28/2018
N	5/28/2018
N	5/28/2018
N	5/28/2018
N	3/26/2018
N	3/26/2018
N	3/26/2018
N	3/26/2018
N	2/28/2018
N	2/28/2018
N	2/28/2018
N	2/28/2018
N	1/11/2018
N	1/11/2018
N	1/11/2018
N	1/11/2018
N	12/20/2017
N	12/20/2017
N	12/20/2017
N	12/20/2017
N	11/28/2017
N	11/28/2017
N	11/28/2017
N	11/28/2017
N	10/28/2017
N	10/28/2017
N	10/28/2017
N	10/28/2017
N	9/27/2017
N	9/27/2017
N	9/27/2017
N	9/27/2017
N	8/28/2017
N	8/28/2017
N	8/28/2017
N	8/28/2017
N	7/26/2017
N	7/26/2017
N	7/26/2017
N	7/26/2017
N	7/26/2017
N	7/26/2017
N	7/26/2017
N	7/26/2017
N	7/26/2017
Y	7/26/2017
Y	7/26/2017
Y	7/26/2017
Y	7/26/2017
N	4/28/2017
N	4/28/2017
N	4/28/2017
N	4/28/2017
N	3/28/2017
N	3/28/2017
N	3/28/2017
N	3/28/2017
Y	8/15/2017
Y	8/15/2017
Y	8/15/2017
N	8/15/2017
Y	8/15/2017
Y	8/15/2017
Y	8/15/2017
Y	8/15/2017
N	1/16/2017
N	1/16/2017
N	1/16/2017
N	1/16/2017
N	1/16/2017
N	1/16/2017
N	1/16/2017
N	1/16/2017
N	1/16/2017
Y	1/16/2017
Y	1/16/2017
Y	1/16/2017
Y	1/16/2017
N	10/29/2016
N	10/29/2016
N	10/29/2016
N	10/29/2016
N	9/28/2016
N	9/28/2016
N	9/28/2016
N	9/28/2016
N	8/27/2016
N	8/27/2016
N	8/27/2016
N	8/27/2016
N	7/26/2016
N	7/26/2016
N	7/26/2016
N	7/26/2016
N	6/28/2016
N	6/28/2016
N	6/28/2016
N	6/28/2016
N	5/24/2016
N	5/24/2016
N	5/24/2016
N	5/24/2016
N	4/28/2016
N	4/28/2016
N	4/28/2016
N	4/28/2016
N	3/29/2016
N	3/29/2016
N	3/29/2016
N	3/29/2016
N	2/10/2016
N	2/10/2016
N	2/10/2016
N	2/10/2016
N	1/28/2016
N	1/28/2016
N	1/28/2016
N	1/28/2016
N	12/28/2015
N	12/28/2015

N	12/28/2015
N	12/28/2015
N	11/28/2015
N	11/28/2015
N	11/28/2015
N	11/28/2015
N	10/28/2015
N	10/28/2015
N	10/28/2015
N	10/28/2015
N	9/26/2015
N	9/26/2015
N	9/26/2015
N	9/26/2015
N	8/13/2015
N	8/13/2015
N	8/13/2015
N	8/13/2015
N	8/6/2015
N	8/6/2015
N	8/6/2015
N	8/6/2015
N	6/26/2015
N	6/26/2015
N	6/26/2015
N	6/26/2015
N	5/28/2015
N	5/28/2015
N	5/28/2015
N	5/28/2015
N	4/12/2015
N	4/12/2015
N	4/12/2015
N	4/12/2015
N	3/26/2015
N	3/26/2015
N	3/26/2015
N	3/26/2015
N	2/18/2015
N	2/18/2015
N	2/18/2015
N	2/18/2015
N	1/27/2015
N	1/27/2015
N	1/27/2015
N	1/27/2015
N	12/26/2014
N	12/26/2014
N	12/26/2014
N	12/26/2014
N	11/28/2014
N	11/28/2014
N	11/28/2014
N	11/28/2014

NPDES ID	Permit Name	Latitude in DMS	Longitude in DMS	Latitude in Decima	Longitude in Decim
KY0080845	Great Oaks WWTF	+ 36 59' 6" 0	- 88 38' 20" 0	36.985	-88.638889
KY0080845	Great Oaks WWTF	+ 36 59' 6" 0	- 88 38' 20" 0	36.985	-88.638889
KY0080845	Great Oaks WWTF	+ 36 59' 6" 0	- 88 38' 20" 0	36.985	-88.638889
KY0080845	Great Oaks WWTF	+ 36 59' 6" 0	- 88 38' 20" 0	36.985	-88.638889
KY0080845	Great Oaks WWTF	+ 36 59' 6" 0	- 88 38' 20" 0	36.985	-88.638889
KY0080845	Great Oaks WWTF	+ 36 59' 6" 0	- 88 38' 20" 0	36.985	-88.638889
KY0080845	Great Oaks WWTF	+ 36 59' 6" 0	- 88 38' 20" 0	36.985	-88.638889
KY0080845	Great Oaks WWTF	+ 36 59' 6" 0	- 88 38' 20" 0	36.985	-88.638889
KY0080845	Great Oaks WWTF	+ 36 59' 6" 0	- 88 38' 20" 0	36.985	-88.638889
KY0080845	Great Oaks WWTF	+ 36 59' 6" 0	- 88 38' 20" 0	36.985	-88.638889
KY0080845	Great Oaks WWTF	+ 36 59' 6" 0	- 88 38' 20" 0	36.985	-88.638889
KY0080845	Great Oaks WWTF	+ 36 59' 6" 0	- 88 38' 20" 0	36.985	-88.638889
KY0080845	Great Oaks WWTF	+ 36 59' 6" 0	- 88 38' 20" 0	36.985	-88.638889
KY0080845	Great Oaks WWTF	+ 36 59' 6" 0	- 88 38' 20" 0	36.985	-88.638889
KY0080845	Great Oaks WWTF	+ 36 59' 6" 0	- 88 38' 20" 0	36.985	-88.638889
KY0080845	Great Oaks WWTF	+ 36 59' 6" 0	- 88 38' 20" 0	36.985	-88.638889
KY0080845	Great Oaks WWTF	+ 36 59' 6" 0	- 88 38' 20" 0	36.985	-88.638889
KY0080845	Great Oaks WWTF	+ 36 59' 6" 0	- 88 38' 20" 0	36.985	-88.638889
KY0080845	Great Oaks WWTF	+ 36 59' 6" 0	- 88 38' 20" 0	36.985	-88.638889
KY0080845	Great Oaks WWTF	+ 36 59' 6" 0	- 88 38' 20" 0	36.985	-88.638889
KY0080845	Great Oaks WWTF	+ 36 59' 6" 0	- 88 38' 20" 0	36.985	-88.638889
KY0080845	Great Oaks WWTF	+ 36 59' 6" 0	- 88 38' 20" 0	36.985	-88.638889
KY0080845	Great Oaks WWTF	+ 36 59' 6" 0	- 88 38' 20" 0	36.985	-88.638889
KY0080845	Great Oaks WWTF	+ 36 59' 6" 0	- 88 38' 20" 0	36.985	-88.638889
KY0080845	Great Oaks WWTF	+ 36 59' 6" 0	- 88 38' 20" 0	36.985	-88.638889

County Name	Facility UDF3	App. Design Flow (	mary Permit SIC C	rr. Major Minor Sta	Limit Set Name
McCracken		0.07	6552	Minor	SANITARY WASTE
McCracken		0.07	6552	Minor	SANITARY WASTE
McCracken		0.07	6552	Minor	SANITARY WASTE
McCracken		0.07	6552	Minor	SANITARY WASTE
McCracken		0.07	6552	Minor	SANITARY WASTE
McCracken		0.07	6552	Minor	SANITARY WASTE
McCracken		0.07	6552	Minor	SANITARY WASTE
McCracken		0.07	6552	Minor	SANITARY WASTE
McCracken		0.07	6552	Minor	SANITARY WASTE
McCracken		0.07	6552	Minor	SANITARY WASTE
McCracken		0.07	6552	Minor	SANITARY WASTE
McCracken		0.07	6552	Minor	SANITARY WASTE
McCracken		0.07	6552	Minor	SANITARY WASTE
McCracken		0.07	6552	Minor	SANITARY WASTE
McCracken		0.07	6552	Minor	SANITARY WASTE
McCracken		0.07	6552	Minor	SANITARY WASTE
McCracken		0.07	6552	Minor	SANITARY WASTE
McCracken		0.07	6552	Minor	SANITARY WASTE
McCracken		0.07	6552	Minor	SANITARY WASTE
McCracken		0.07	6552	Minor	SANITARY WASTE
McCracken		0.07	6552	Minor	SANITARY WASTE
McCracken		0.07	6552	Minor	SANITARY WASTE
McCracken		0.07	6552	Minor	SANITARY WASTE
McCracken		0.07	6552	Minor	SANITARY WASTE
McCracken		0.07	6552	Minor	SANITARY WASTE

Number of Report	umber of Submissio	Initial Monitoring	R Initial DMR Due D	Perm Feature ID	Limit Set Designato
1	1	5/1/2012	6/28/2012	001	1
1	1	5/1/2012	6/28/2012	001	1
1	1	5/1/2012	6/28/2012	001	1
1	1	5/1/2012	6/28/2012	001	1
1	1	5/1/2012	6/28/2012	001	1
1	1	5/1/2012	6/28/2012	001	1
1	1	5/1/2012	6/28/2012	001	1
1	1	5/1/2012	6/28/2012	001	1
1	1	5/1/2012	6/28/2012	001	1
1	1	5/1/2012	6/28/2012	001	1
1	1	5/1/2012	6/28/2012	001	1
1	1	5/1/2012	6/28/2012	001	1
1	1	5/1/2012	6/28/2012	001	1
1	1	5/1/2012	6/28/2012	001	1
1	1	5/1/2012	6/28/2012	001	1
1	1	5/1/2012	6/28/2012	001	1
1	1	5/1/2012	6/28/2012	001	1
1	1	5/1/2012	6/28/2012	001	1
1	1	5/1/2012	6/28/2012	001	1
1	1	5/1/2012	6/28/2012	001	1
1	1	5/1/2012	6/28/2012	001	1
1	1	5/1/2012	6/28/2012	001	1
1	1	5/1/2012	6/28/2012	001	1
1	1	5/1/2012	6/28/2012	001	1
1	1	5/1/2012	6/28/2012	001	1
1	1	5/1/2012	6/28/2012	001	1
1	1	5/1/2012	6/28/2012	001	1

nitoring Location De	e/Longitude.Latitud	titude in Deg/Min/S	/Longitude.Longitu	gitude in Deg/Min/	Limit Start Date
Effluent Gross	36.986667	+ 36 59' 12" 0	-88.638611	- 88 38' 19" 0	5/1/2012
Effluent Gross	36.986667	+ 36 59' 12" 0	-88.638611	- 88 38' 19" 0	5/1/2012
Effluent Gross	36.986667	+ 36 59' 12" 0	-88.638611	- 88 38' 19" 0	5/1/2012
Effluent Gross	36.986667	+ 36 59' 12" 0	-88.638611	- 88 38' 19" 0	5/1/2012
Effluent Gross	36.986667	+ 36 59' 12" 0	-88.638611	- 88 38' 19" 0	5/1/2012
Effluent Gross	36.986667	+ 36 59' 12" 0	-88.638611	- 88 38' 19" 0	5/1/2012
Effluent Gross	36.986667	+ 36 59' 12" 0	-88.638611	- 88 38' 19" 0	5/1/2012
Effluent Gross	36.986667	+ 36 59' 12" 0	-88.638611	- 88 38' 19" 0	5/1/2012
Effluent Gross	36.986667	+ 36 59' 12" 0	-88.638611	- 88 38' 19" 0	5/1/2012
Effluent Gross	36.986667	+ 36 59' 12" 0	-88.638611	- 88 38' 19" 0	5/1/2012
Effluent Gross	36.986667	+ 36 59' 12" 0	-88.638611	- 88 38' 19" 0	5/1/2012
Effluent Gross	36.986667	+ 36 59' 12" 0	-88.638611	- 88 38' 19" 0	5/1/2012
Effluent Gross	36.986667	+ 36 59' 12" 0	-88.638611	- 88 38' 19" 0	5/1/2012
Effluent Gross	36.986667	+ 36 59' 12" 0	-88.638611	- 88 38' 19" 0	5/1/2012
Effluent Gross	36.986667	+ 36 59' 12" 0	-88.638611	- 88 38' 19" 0	5/1/2012
Effluent Gross	36.986667	+ 36 59' 12" 0	-88.638611	- 88 38' 19" 0	5/1/2012
Effluent Gross	36.986667	+ 36 59' 12" 0	-88.638611	- 88 38' 19" 0	5/1/2012
Effluent Gross	36.986667	+ 36 59' 12" 0	-88.638611	- 88 38' 19" 0	5/1/2012
Effluent Gross	36.986667	+ 36 59' 12" 0	-88.638611	- 88 38' 19" 0	5/1/2012
Effluent Gross	36.986667	+ 36 59' 12" 0	-88.638611	- 88 38' 19" 0	5/1/2012
Effluent Gross	36.986667	+ 36 59' 12" 0	-88.638611	- 88 38' 19" 0	5/1/2012
Effluent Gross	36.986667	+ 36 59' 12" 0	-88.638611	- 88 38' 19" 0	5/1/2012
Effluent Gross	36.986667	+ 36 59' 12" 0	-88.638611	- 88 38' 19" 0	5/1/2012
Effluent Gross	36.986667	+ 36 59' 12" 0	-88.638611	- 88 38' 19" 0	5/1/2012
Effluent Gross	36.986667	+ 36 59' 12" 0	-88.638611	- 88 38' 19" 0	5/1/2012
Effluent Gross	36.986667	+ 36 59' 12" 0	-88.638611	- 88 38' 19" 0	5/1/2012

Limit End Date	Parameter Code	Limit Season ID	Parameter Desc	nit Sample Type Co	equency of Analys
4/30/2017	00300	0	Oxygen, dissolved [	GR	01/30
4/30/2017	00400	0	pH	GR	01/30
4/30/2017	00400	0	pH	GR	01/30
4/30/2017	00530	0	Solids, total suspen	24	01/30
4/30/2017	00530	0	Solids, total suspen	24	01/30
4/30/2017	00530	0	Solids, total suspen	24	01/30
4/30/2017	00530	0	Solids, total suspen	24	01/30
4/30/2017	00610	1	Nitrogen, ammonia	24	01/30
4/30/2017	00610	1	Nitrogen, ammonia	24	01/30
4/30/2017	00610	1	Nitrogen, ammonia	24	01/30
4/30/2017	00610	1	Nitrogen, ammonia	24	01/30
4/30/2017	00610	2	Nitrogen, ammonia	24	01/30
4/30/2017	00610	2	Nitrogen, ammonia	24	01/30
4/30/2017	00610	2	Nitrogen, ammonia	24	01/30
4/30/2017	00610	2	Nitrogen, ammonia	24	01/30
4/30/2017	50050	0	Flow, in conduit or tl	IN	01/30
4/30/2017	50050	0	Flow, in conduit or tl	IN	01/30
4/30/2017	50060	0	Chlorine, total residu	GR	01/30
4/30/2017	50060	0	Chlorine, total residu	GR	01/30
4/30/2017	51040	0	E. coli	GR	01/30
4/30/2017	51040	0	E. coli	GR	01/30
4/30/2017	80082	0	BOD, carbonaceous	24	01/30
4/30/2017	80082	0	BOD, carbonaceous	24	01/30
4/30/2017	80082	0	BOD, carbonaceous	24	01/30
4/30/2017	80082	0	BOD, carbonaceous	24	01/30

requency of Analys	Limit Unit Code	Limit Unit Desc	imit Unit Short Des	Limit Value	tatistical Base Cod
Monthly	19	Milligrams per Liter	mg/L	7.	IB
Monthly	12	Standard Units	SU	6.	ME
Monthly	12	Standard Units	SU	9.	MB
Monthly	19	Milligrams per Liter	mg/L	30.	3C
Monthly	19	Milligrams per Liter	mg/L	45.	WA
Monthly	26	Pounds per Day	lb/d	17.5	3C
Monthly	26	Pounds per Day	lb/d	26.3	WA
Monthly	19	Milligrams per Liter	mg/L	4.	3C
Monthly	19	Milligrams per Liter	mg/L	6.	WA
Monthly	26	Pounds per Day	lb/d	2.34	3C
Monthly	26	Pounds per Day	lb/d	3.5	WA
Monthly	19	Milligrams per Liter	mg/L	10.	3C
Monthly	19	Milligrams per Liter	mg/L	15.	WA
Monthly	26	Pounds per Day	lb/d	5.84	3C
Monthly	26	Pounds per Day	lb/d	8.76	WA
Monthly	03	Million Gallons per D	MGD		3C
Monthly	03	Million Gallons per D	MGD		IA
Monthly	19	Milligrams per Liter	mg/L	.011	3C
Monthly	19	Milligrams per Liter	mg/L	.019	WA
Monthly	13	Number per 100 Mil	#/100mL	130.	3D
Monthly	13	Number per 100 Mil	#/100mL	240.	7B
Monthly	19	Milligrams per Liter	mg/L	10.	3C
Monthly	19	Milligrams per Liter	mg/L	15.	WA
Monthly	26	Pounds per Day	lb/d	5.84	3C
Monthly	26	Pounds per Day	lb/d	8.76	WA

istical Base Short D	istical Base Long D	istical Base Type C	DMR Comment	Modification Effect	Modification Type
INST MIN	Instantaneous Minin	MIN			
MINIMUM	Minimum	MIN			
MAXIMUM	Maximum	MAX			
30DA AVG	30 Day Average	AVG			
WKLY AVG	Weekly Average	AVG			
30DA AVG	30 Day Average	AVG			
WKLY AVG	Weekly Average	AVG			
30DA AVG	30 Day Average	AVG			
WKLY AVG	Weekly Average	AVG			
30DA AVG	30 Day Average	AVG			
WKLY AVG	Weekly Average	AVG			
30DA AVG	30 Day Average	AVG			
WKLY AVG	Weekly Average	AVG			
30DA AVG	30 Day Average	AVG			
WKLY AVG	Weekly Average	AVG			
INST MAX	Instantaneous Maxi	MAX			
30DA AVG	30 Day Average	AVG			
WKLY AVG	Weekly Average	AVG			
30DA GEO	30 Day Geometric	AVG			
7 DA GEO	7 Day Geometric	AVG			
30DA AVG	30 Day Average	AVG			
WKLY AVG	Weekly Average	AVG			
30DA AVG	30 Day Average	AVG			
WKLY AVG	Weekly Average	AVG			

Modification Type	Modification Effect	Modification Type	Modification Type

Environmental Protection Agency
Integrated Compliance Information System

Version 1.0, modified 08/12/2011
Created Date: 05/02/2011
Last Refresh Date: 11/22/2019

Report Selection Criteri

NPDES ID(s): KY0080845
State Code: KY
Region Code(s):
SIC Code(s):
NAICS Code(s):
Major/Minor Indicator:
County(ies):
Permit Type(s):
Permit Status(es):
Monitoring Period Date Range: 10/01/2014 - 11/
Violation Type: All Data
Parameter Code(s):
State Water Body(ies):

NODI Code	Acceptable?
1	N
2	Y
3	Y
4	Y
5	Y
7	Y
8	N
9	Y
A	Y
B	Y
C	Y
D	N
E	N
F	Y
G	N
H	N
I	Y
J	Y
K	Y
L	N
M	N
N	Y
Q	Y
R	Y
S	Y
V	Y
W	Y
X	N

NODI Desc
Wrong Flow
Operation Shutdown
Special Report Attached
Discharge to Lagoon/Groundwater
Frozen Conditions
No Influent
Other (See Comments)
Conditional Monitoring - Not Required This Period
General Permit Exemption
Below Detection Limit/No Detection
No Discharge
Lost Sample/Data Not Available
Analysis Not Conducted/No Sample
Insufficient Flow for Sampling
Sampling Equipment Failure
Invalid Test
Land Applied
Recycled - Water-Closed System
Natural Disaster
DMR Received but not Entered
Laboratory Error
Not Constructed
Not Quantifiable
Administratively Resolved
Fire Conditions
Weather Related
Dry Lysimeter/Well
Parameter/Value Not Reported

NPDES ID	State Code	Region Code	Permit Name	Permittee Address	Facility Name	County	Major Minor Indicator	Permit Type	Permit Status	Federal Grant Flag	Primary SIC Code	Primary NAICS Code	State Water Body	Lat/Long.Latitude in Decimal Degrees	Lat/Long.Longitude in Decimal Degrees	Limit Set	Param Cd - MLC - Season ID	Parameter	Mon. Loc. Desc.	Limit Type Code
KY0080845	KY	04	Great Oaks WWTF	500 Northwest Plaza Dr Ste 500 Saint Ann, MO 63074	GREAT OAKS WWTF	McCracken	Minor	NPDES Individual Permit	Admin Continued	N	6552	237210	06040006-BLIZZARD POND / DRAINAGE DITCH	36.985	-88.638889	001-1	00300-1-0	Oxygen, dissolved [DO]	Effluent Gross	ENF
KY0080845	KY	04	Great Oaks WWTF	500 Northwest Plaza Dr Ste 500 Saint Ann, MO 63074	GREAT OAKS WWTF	McCracken	Minor	NPDES Individual Permit	Admin Continued	N	6552	237210	06040006-BLIZZARD POND / DRAINAGE DITCH	36.985	-88.638889	001-1	00400-1-0	pH	Effluent Gross	ENF
KY0080845	KY	04	Great Oaks WWTF	500 Northwest Plaza Dr Ste 500 Saint Ann, MO 63074	GREAT OAKS WWTF	McCracken	Minor	NPDES Individual Permit	Admin Continued	N	6552	237210	06040006-BLIZZARD POND / DRAINAGE DITCH	36.985	-88.638889	001-1	00530-1-0	Solids, total suspended	Effluent Gross	ENF
KY0080845	KY	04	Great Oaks WWTF	500 Northwest Plaza Dr Ste 500 Saint Ann, MO 63074	GREAT OAKS WWTF	McCracken	Minor	NPDES Individual Permit	Admin Continued	N	6552	237210	06040006-BLIZZARD POND / DRAINAGE DITCH	36.985	-88.638889	001-1	00610-1-1	Nitrogen, ammonia total [as N]	Effluent Gross	ENF
KY0080845	KY	04	Great Oaks WWTF	500 Northwest Plaza Dr Ste 500 Saint Ann, MO 63074	GREAT OAKS WWTF	McCracken	Minor	NPDES Individual Permit	Admin Continued	N	6552	237210	06040006-BLIZZARD POND / DRAINAGE DITCH	36.985	-88.638889	001-1	00610-1-2	Nitrogen, ammonia total [as N]	Effluent Gross	ENF
KY0080845	KY	04	Great Oaks WWTF	500 Northwest Plaza Dr Ste 500 Saint Ann, MO 63074	GREAT OAKS WWTF	McCracken	Minor	NPDES Individual Permit	Admin Continued	N	6552	237210	06040006-BLIZZARD POND / DRAINAGE DITCH	36.985	-88.638889	001-1	50050-1-0	Flow, in conduit or thru treatment plant	Effluent Gross	ENF
KY0080845	KY	04	Great Oaks WWTF	500 Northwest Plaza Dr Ste 500 Saint Ann, MO 63074	GREAT OAKS WWTF	McCracken	Minor	NPDES Individual Permit	Admin Continued	N	6552	237210	06040006-BLIZZARD POND / DRAINAGE DITCH	36.985	-88.638889	001-1	50060-1-0	Chlorine, total residual	Effluent Gross	ENF
KY0080845	KY	04	Great Oaks WWTF	500 Northwest Plaza Dr Ste 500 Saint Ann, MO 63074	GREAT OAKS WWTF	McCracken	Minor	NPDES Individual Permit	Admin Continued	N	6552	237210	06040006-BLIZZARD POND / DRAINAGE DITCH	36.985	-88.638889	001-1	51040-1-0	E. coli	Effluent Gross	ENF
KY0080845	KY	04	Great Oaks WWTF	500 Northwest Plaza Dr Ste 500 Saint Ann, MO 63074	GREAT OAKS WWTF	McCracken	Minor	NPDES Individual Permit	Admin Continued	N	6552	237210	06040006-BLIZZARD POND / DRAINAGE DITCH	36.985	-88.638889	001-1	80082-1-0	BOD, carbonaceous [5 day, 20 C]	Effluent Gross	ENF

NPDES ID	Permit Name	County Name	Perm Feature ID-Limit Set	Mon. Period End Date	Parameter Desc	Param Cd - MLC - Season ID	Monitoring Location Desc	Worst % exced.	Quantity 1	Q1 DMR Value Unit Short Desc	Quantity 2	Q2 DMR Value Unit Short Desc	Limit Value - Quantity Units	Concentration 1	C1 DMR Value Unit Short Desc	Concentration 2	C2 DMR Value Unit Short Desc	Concentration 3	C3 DMR Value Unit Short Desc	Limit Value - Concentration Units	Effluent Vio. Exists
KY0080845	Great Oaks WWTF	McCracken	001-1	09/30/2019	Oxygen, dissolved [DO]	00300-1-0	Effluent Gross							8.3						mg/L	N
KY0080845	Great Oaks WWTF	McCracken	001-1	08/31/2019	Oxygen, dissolved [DO]	00300-1-0	Effluent Gross	6						6.6						mg/L	Y
KY0080845	Great Oaks WWTF	McCracken	001-1	07/31/2019	Oxygen, dissolved [DO]	00300-1-0	Effluent Gross													mg/L	N
KY0080845	Great Oaks WWTF	McCracken	001-1	06/30/2019	Oxygen, dissolved [DO]	00300-1-0	Effluent Gross													mg/L	N
KY0080845	Great Oaks WWTF	McCracken	001-1	05/31/2019	Oxygen, dissolved [DO]	00300-1-0	Effluent Gross													mg/L	N
KY0080845	Great Oaks WWTF	McCracken	001-1	04/30/2019	Oxygen, dissolved [DO]	00300-1-0	Effluent Gross													mg/L	N
KY0080845	Great Oaks WWTF	McCracken	001-1	03/31/2019	Oxygen, dissolved [DO]	00300-1-0	Effluent Gross							7.41	mg/L					mg/L	N
KY0080845	Great Oaks WWTF	McCracken	001-1	02/28/2019	Oxygen, dissolved [DO]	00300-1-0	Effluent Gross							8.07	mg/L					mg/L	N
KY0080845	Great Oaks WWTF	McCracken	001-1	01/31/2019	Oxygen, dissolved [DO]	00300-1-0	Effluent Gross							9.17	mg/L					mg/L	N
KY0080845	Great Oaks WWTF	McCracken	001-1	12/31/2018	Oxygen, dissolved [DO]	00300-1-0	Effluent Gross							9.25	mg/L					mg/L	N
KY0080845	Great Oaks WWTF	McCracken	001-1	11/30/2018	Oxygen, dissolved [DO]	00300-1-0	Effluent Gross							7.12	mg/L					mg/L	N
KY0080845	Great Oaks WWTF	McCracken	001-1	10/31/2018	Oxygen, dissolved [DO]	00300-1-0	Effluent Gross							9.38	mg/L					mg/L	N
KY0080845	Great Oaks WWTF	McCracken	001-1	09/30/2018	Oxygen, dissolved [DO]	00300-1-0	Effluent Gross							7	mg/L					mg/L	N
KY0080845	Great Oaks WWTF	McCracken	001-1	08/31/2018	Oxygen, dissolved [DO]	00300-1-0	Effluent Gross							7.01	mg/L					mg/L	N
KY0080845	Great Oaks WWTF	McCracken	001-1	07/31/2018	Oxygen, dissolved [DO]	00300-1-0	Effluent Gross	6						6.61	mg/L					mg/L	Y
KY0080845	Great Oaks WWTF	McCracken	001-1	06/30/2018	Oxygen, dissolved [DO]	00300-1-0	Effluent Gross	2						6.84	mg/L					mg/L	Y
KY0080845	Great Oaks WWTF	McCracken	001-1	05/31/2018	Oxygen, dissolved [DO]	00300-1-0	Effluent Gross	24						5.35	mg/L					mg/L	Y
KY0080845	Great Oaks WWTF	McCracken	001-1	04/30/2018	Oxygen, dissolved [DO]	00300-1-0	Effluent Gross													mg/L	N
KY0080845	Great Oaks WWTF	McCracken	001-1	03/31/2018	Oxygen, dissolved [DO]	00300-1-0	Effluent Gross	18						5.74	mg/L					mg/L	Y
KY0080845	Great Oaks WWTF	McCracken	001-1	02/28/2018	Oxygen, dissolved [DO]	00300-1-0	Effluent Gross							8.86	mg/L					mg/L	N
KY0080845	Great Oaks WWTF	McCracken	001-1	01/31/2018	Oxygen, dissolved [DO]	00300-1-0	Effluent Gross							11.4	mg/L					mg/L	N
KY0080845	Great Oaks WWTF	McCracken	001-1	12/31/2017	Oxygen, dissolved [DO]	00300-1-0	Effluent Gross							7	mg/L					mg/L	N
KY0080845	Great Oaks WWTF	McCracken	001-1	11/30/2017	Oxygen, dissolved [DO]	00300-1-0	Effluent Gross							7.5	mg/L					mg/L	N
KY0080845	Great Oaks WWTF	McCracken	001-1	10/31/2017	Oxygen, dissolved [DO]	00300-1-0	Effluent Gross							7	mg/L					mg/L	N
KY0080845	Great Oaks WWTF	McCracken	001-1	09/30/2017	Oxygen, dissolved [DO]	00300-1-0	Effluent Gross							7	mg/L					mg/L	N
KY0080845	Great Oaks WWTF	McCracken	001-1	08/31/2017	Oxygen, dissolved [DO]	00300-1-0	Effluent Gross							7.3	mg/L					mg/L	N
KY0080845	Great Oaks WWTF	McCracken	001-1	07/31/2017	Oxygen, dissolved [DO]	00300-1-0	Effluent Gross							7.3	mg/L					mg/L	N
KY0080845	Great Oaks WWTF	McCracken	001-1	06/30/2017	Oxygen, dissolved [DO]	00300-1-0	Effluent Gross							7	mg/L					mg/L	N
KY0080845	Great Oaks WWTF	McCracken	001-1	05/31/2017	Oxygen, dissolved [DO]	00300-1-0	Effluent Gross							7	mg/L					mg/L	N
KY0080845	Great Oaks WWTF	McCracken	001-1	04/30/2017	Oxygen, dissolved [DO]	00300-1-0	Effluent Gross							7	mg/L					mg/L	N
KY0080845	Great Oaks WWTF	McCracken	001-1	03/31/2017	Oxygen, dissolved [DO]	00300-1-0	Effluent Gross							7.2	mg/L					mg/L	N
KY0080845	Great Oaks WWTF	McCracken	001-1	02/28/2017	Oxygen, dissolved [DO]	00300-1-0	Effluent Gross							7	mg/L					mg/L	N
KY0080845	Great Oaks WWTF	McCracken	001-1	01/31/2017	Oxygen, dissolved [DO]	00300-1-0	Effluent Gross							7.2	mg/L					mg/L	N
KY0080845	Great Oaks WWTF	McCracken	001-1	12/31/2016	Oxygen, dissolved [DO]	00300-1-0	Effluent Gross							7	mg/L					mg/L	N
KY0080845	Great Oaks WWTF	McCracken	001-1	11/30/2016	Oxygen, dissolved [DO]	00300-1-0	Effluent Gross							7	mg/L					mg/L	N
KY0080845	Great Oaks WWTF	McCracken	001-1	10/31/2016	Oxygen, dissolved [DO]	00300-1-0	Effluent Gross							7	mg/L					mg/L	N
KY0080845	Great Oaks WWTF	McCracken	001-1	09/30/2016	Oxygen, dissolved [DO]	00300-1-0	Effluent Gross							7	mg/L					mg/L	N
KY0080845	Great Oaks WWTF	McCracken	001-1	08/31/2016	Oxygen, dissolved [DO]	00300-1-0	Effluent Gross							7	mg/L					mg/L	N
KY0080845	Great Oaks WWTF	McCracken	001-1	07/31/2016	Oxygen, dissolved [DO]	00300-1-0	Effluent Gross							7.3	mg/L					mg/L	N
KY0080845	Great Oaks WWTF	McCracken	001-1	06/30/2016	Oxygen, dissolved [DO]	00300-1-0	Effluent Gross							7.2	mg/L					mg/L	N
KY0080845	Great Oaks WWTF	McCracken	001-1	05/31/2016	Oxygen, dissolved [DO]	00300-1-0	Effluent Gross							7.2	mg/L					mg/L	N
KY0080845	Great Oaks WWTF	McCracken	001-1	04/30/2016	Oxygen, dissolved [DO]	00300-1-0	Effluent Gross							7.4	mg/L					mg/L	N
KY0080845	Great Oaks WWTF	McCracken	001-1	03/31/2016	Oxygen, dissolved [DO]	00300-1-0	Effluent Gross							7	mg/L					mg/L	N
KY0080845	Great Oaks WWTF	McCracken	001-1	02/29/2016	Oxygen, dissolved [DO]	00300-1-0	Effluent Gross							7	mg/L					mg/L	N
KY0080845	Great Oaks WWTF	McCracken	001-1	01/31/2016	Oxygen, dissolved [DO]	00300-1-0	Effluent Gross							7	mg/L					mg/L	N
KY0080845	Great Oaks WWTF	McCracken	001-1	12/31/2015	Oxygen, dissolved [DO]	00300-1-0	Effluent Gross							7	mg/L					mg/L	N
KY0080845	Great Oaks WWTF	McCracken	001-1	11/30/2015	Oxygen, dissolved [DO]	00300-1-0	Effluent Gross							7.5	mg/L					mg/L	N
KY0080845	Great Oaks WWTF	McCracken	001-1	10/31/2015	Oxygen, dissolved [DO]	00300-1-0	Effluent Gross							7	mg/L					mg/L	N
KY0080845	Great Oaks WWTF	McCracken	001-1	09/30/2015	Oxygen, dissolved [DO]	00300-1-0	Effluent Gross							7.4	mg/L					mg/L	N
KY0080845	Great Oaks WWTF	McCracken	001-1	08/31/2015	Oxygen, dissolved [DO]	00300-1-0	Effluent Gross							7.8	mg/L					mg/L	N
KY0080845	Great Oaks WWTF	McCracken	001-1	07/31/2015	Oxygen, dissolved [DO]	00300-1-0	Effluent Gross							7	mg/L					mg/L	N
KY0080845	Great Oaks WWTF	McCracken	001-1	06/30/2015	Oxygen, dissolved [DO]	00300-1-0	Effluent Gross							7.5	mg/L					mg/L	N
KY0080845	Great Oaks WWTF	McCracken	001-1	05/31/2015	Oxygen, dissolved [DO]	00300-1-0	Effluent Gross							7.5	mg/L					mg/L	N
KY0080845	Great Oaks WWTF	McCracken	001-1	04/30/2015	Oxygen, dissolved [DO]	00300-1-0	Effluent Gross							7	mg/L					mg/L	N
KY0080845	Great Oaks WWTF	McCracken	001-1	03/31/2015	Oxygen, dissolved [DO]	00300-1-0	Effluent Gross							7.4	mg/L					mg/L	N
KY0080845	Great Oaks WWTF	McCracken	001-1	02/28/2015	Oxygen, dissolved [DO]	00300-1-0	Effluent Gross							7.4	mg/L					mg/L	N
KY0080845	Great Oaks WWTF	McCracken	001-1	01/31/2015	Oxygen, dissolved [DO]	00300-1-0	Effluent Gross							8.2	mg/L					mg/L	N
KY0080845	Great Oaks WWTF	McCracken	001-1	12/31/2014	Oxygen, dissolved [DO]	00300-1-0	Effluent Gross							7.5	mg/L					mg/L	N
KY0080845	Great Oaks WWTF	McCracken	001-1	11/30/2014	Oxygen, dissolved [DO]	00300-1-0	Effluent Gross							7.4	mg/L					mg/L	N
KY0080845	Great Oaks WWTF	McCracken	001-1	10/31/2014	Oxygen, dissolved [DO]	00300-1-0	Effluent Gross							7.2	mg/L					mg/L	N
KY0080845	Great Oaks WWTF	McCracken	001-1	09/30/2019	pH	00400-1-0	Effluent Gross							8.3				8.3		SU	N
KY0080845	Great Oaks WWTF	McCracken	001-1	08/31/2019	pH	00400-1-0	Effluent Gross							7.8				7.8		SU	N
KY0080845	Great Oaks WWTF	McCracken	001-1	07/31/2019	pH	00400-1-0	Effluent Gross													SU	N
KY0080845	Great Oaks WWTF	McCracken	001-1	06/30/2019	pH	00400-1-0	Effluent Gross													SU	N
KY0080845	Great Oaks WWTF	McCracken	001-1	05/31/2019	pH	00400-1-0	Effluent Gross													SU	N
KY0080845	Great Oaks WWTF	McCracken	001-1	04/30/2019	pH	00400-1-0	Effluent Gross													SU	N
KY0080845	Great Oaks WWTF	McCracken	001-1	03/31/2019	pH	00400-1-0	Effluent Gross							8.08	SU					SU	N
KY0080845	Great Oaks WWTF	McCracken	001-1	03/31/2019	pH	00400-1-0	Effluent Gross											8.08	SU	SU	N
KY0080845	Great Oaks WWTF	McCracken	001-1	02/28/2019	pH	00400-1-0	Effluent Gross							7.21	SU					SU	N
KY0080845	Great Oaks WWTF	McCracken	001-1	02/28/2019	pH	00400-1-0	Effluent Gross											7.21	SU	SU	N
KY0080845	Great Oaks WWTF	McCracken	001-1	01/31/2019	pH	00400-1-0	Effluent Gross							7.44	SU					SU	N
KY0080845	Great Oaks WWTF	McCracken	001-1	01/31/2019	pH	00400-1-0	Effluent Gross											7.44	SU	SU	N
KY0080845	Great Oaks WWTF	McCracken	001-1	12/31/2018	pH	00400-1-0	Effluent Gross							7.38	SU					SU	N
KY0080845	Great Oaks WWTF	McCracken	001-1	12/31/2018	pH	00400-1-0	Effluent Gross											7.38	SU	SU	N
KY0080845	Great Oaks WWTF	McCracken	001-1	11/30/2018	pH	00400-1-0	Effluent Gross							7.71	SU					SU	N
KY0080845	Great Oaks WWTF	McCracken	001-1	11/30/2018	pH	00400-1-0	Effluent Gross											7.71	SU	SU	N
KY0080845	Great Oaks WWTF	McCracken	001-1	10/31/2018	pH	00400-1-0	Effluent Gross							6.85	SU					SU	N
KY0080845	Great Oaks WWTF	McCracken	001-1	10/31/2018	pH	00400-1-0	Effluent Gross											6.85	SU	SU	N
KY0080845	Great Oaks WWTF	McCracken	001-1	09/30/2018	pH	00400-1-0	Effluent Gross							7.12	SU					SU	N
KY0080845	Great Oaks WWTF	McCracken	001-1	09/30/2018	pH	00400-1-0	Effluent Gross											7.12	SU	SU	N
KY0080845	Great Oaks WWTF	McCracken	001-1	08/31/2018	pH	00400-1-0	Effluent Gross							7.32	SU					SU	N
KY0080845	Great Oaks WWTF	McCracken	001-1	08/31/2018	pH	00400-1-0	Effluent Gross											7.32	SU	SU	N
KY0080845	Great Oaks WWTF	McCracken	001-1	07/31/2018	pH	00400-1-0	Effluent Gross							7.43	SU					SU	N
KY0080845	Great Oaks WWTF	McCracken	001-1	07/31/2018	pH	00400-1-0	Effluent Gross											7.43	SU	SU	N
KY0080845	Great Oaks WWTF	McCracken	001-1	06/30/2018	pH	00400-1-0	Effluent Gross							7.26	SU					SU	N
KY0080845	Great Oaks WWTF	McCracken	001-1	06/30/2018	pH	00400-1-0	Effluent Gross											7.26	SU	SU	N
KY0080845	Great Oaks WWTF	McCracken	001-1	05/31/2018	pH	00400-1-0	Effluent Gross							7.21	SU					SU	N
KY0080845	Great Oaks WWTF	McCracken	001-1	05/31/2018	pH	00400-1-0	Effluent Gross											7.21	SU	SU	N
KY0080845	Great Oaks WWTF	McCracken	001-1	04/30/2018	pH	00400-1-0	Effluent Gross													SU	N
KY0080845	Great Oaks WWTF	McCracken	001-1	03/31/2018	pH	00400-1-0	Effluent Gross							6.78	SU					SU	N
KY0080845	Great Oaks WWTF	McCracken	001-1	03/31/2018	pH	00400-1-0	Effluent Gross											6.78	SU	SU	N
KY0080845	Great Oaks WWTF	McCracken	001-1	02/28/2018	pH	00400-1-0	Effluent Gross							7.42	SU					SU	N
KY0080845	Great Oaks WWTF	McCracken	001-1	02/28/2018	pH	00400-1-0	Effluent Gross											7.42	SU	SU	N
KY0080845	Great Oaks WWTF	McCracken	001-1	01/31/2018	pH	00400-1-0	Effluent Gross							7.05	SU					SU	N
KY0080845	Great Oaks WWTF	McCracken	001-1	01/31/2018	pH	00400-1-0	Effluent Gross											7.05	SU	SU	N
KY0080845	Great Oaks WWTF	McCracken	001-1	12/31/2017	pH	00400-1-0	Effluent Gross							67	SU					SU	N
KY0080845	Great Oaks WWTF	McCracken	001-1	12/31/2017	pH	00400-1-0	Effluent Gross											6.7	SU	SU	N
KY0080845	Great Oaks WWTF	McCracken	001-1	11/30/2017	pH	00400-1-0	Effluent Gross							65	SU					SU	N
KY0080845	Great Oaks WWTF	McCracken	001-1	11/30/2017	pH	00400-1-0	Effluent Gross											6.5	SU	SU	N
KY0080845	Great Oaks WWTF	McCracken	001-1	10/31/2017	pH	00400-1-0	Effluent Gross							7.2	SU					SU	N
KY0080845	Great Oaks WWTF	McCracken	001-1	10/31/2017	pH	00400-1-0	Effluent Gross											7.2	SU	SU	N
KY0080845	Great Oaks WWTF	McCracken	001-1	09/30/2017	pH	00400-1-0	Effluent Gross							6.7	SU					SU	N
KY0080845	Great Oaks WWTF	McCracken	001-1	09/30/2017	pH	00400-1-0	Effluent Gross											6.7	SU	SU	N
KY0080845	Great Oaks WWTF	McCracken	001-1	08/31/2017	pH	00400-1-0	Effluent Gross							6.5	SU					SU	N
KY0080845	Great Oaks WWTF	McCracken	001-1	08/31/2017	pH	00400-1-0	Effluent Gross											6.5	SU	SU	N
KY0080845	Great Oaks WWTF	McCracken	001-1	07/31/2017	pH	00400-1-0	Effluent Gross							6.7	SU					SU	N
KY0080845	Great Oaks WWTF	McCracken	001-1	07/31/2017	pH	00400-1-0	Effluent Gross											6.7	SU	SU	N
KY0080845	Great Oaks WWTF	McCracken	001-1	06/30/2017	pH	00400-1-0	Effluent Gross							7.2	SU					SU	N
KY0080845	Great Oaks WWTF	McCracken	001-1	06/30/2017	pH	00400-1-0	Effluent Gross											7.2	SU	SU	N
KY0080845	Great Oaks WWTF	McCracken	001-1	05/31/2017	pH	00400-1-0	Effluent Gross							8.1	SU					SU	N
KY0080845	Great Oaks WWTF	McCracken	001-1	05/31/2017	pH	00400-1-0	Effluent Gross											8.1	SU	SU	N

KY0080845	Great Oaks WWTF	McCracken	001-1	04/30/2017	pH	00400-1-0	Effluent Gross							8.1	SU				SU	N
KY0080845	Great Oaks WWTF	McCracken	001-1	04/30/2017	pH	00400-1-0	Effluent Gross											8.1	SU	SU	N
KY0080845	Great Oaks WWTF	McCracken	001-1	03/31/2017	pH	00400-1-0	Effluent Gross							8.1	SU					SU	N
KY0080845	Great Oaks WWTF	McCracken	001-1	03/31/2017	pH	00400-1-0	Effluent Gross											8.1	SU	SU	N
KY0080845	Great Oaks WWTF	McCracken	001-1	02/28/2017	pH	00400-1-0	Effluent Gross							6.5	SU					SU	N
KY0080845	Great Oaks WWTF	McCracken	001-1	02/28/2017	pH	00400-1-0	Effluent Gross											6.5	SU	SU	N
KY0080845	Great Oaks WWTF	McCracken	001-1	01/31/2017	pH	00400-1-0	Effluent Gross							6.8	SU					SU	N
KY0080845	Great Oaks WWTF	McCracken	001-1	01/31/2017	pH	00400-1-0	Effluent Gross											6.8	SU	SU	N
KY0080845	Great Oaks WWTF	McCracken	001-1	12/31/2016	pH	00400-1-0	Effluent Gross							6.8	SU					SU	N
KY0080845	Great Oaks WWTF	McCracken	001-1	12/31/2016	pH	00400-1-0	Effluent Gross											6.8	SU	SU	N
KY0080845	Great Oaks WWTF	McCracken	001-1	11/30/2016	pH	00400-1-0	Effluent Gross							7.4	SU					SU	N
KY0080845	Great Oaks WWTF	McCracken	001-1	11/30/2016	pH	00400-1-0	Effluent Gross											7.4	SU	SU	N
KY0080845	Great Oaks WWTF	McCracken	001-1	10/31/2016	pH	00400-1-0	Effluent Gross							6.4	SU					SU	N
KY0080845	Great Oaks WWTF	McCracken	001-1	10/31/2016	pH	00400-1-0	Effluent Gross											6.4	SU	SU	N
KY0080845	Great Oaks WWTF	McCracken	001-1	09/30/2016	pH	00400-1-0	Effluent Gross							7.1	SU					SU	N
KY0080845	Great Oaks WWTF	McCracken	001-1	09/30/2016	pH	00400-1-0	Effluent Gross											7.1	SU	SU	N
KY0080845	Great Oaks WWTF	McCracken	001-1	08/31/2016	pH	00400-1-0	Effluent Gross							8.1	SU					SU	N
KY0080845	Great Oaks WWTF	McCracken	001-1	08/31/2016	pH	00400-1-0	Effluent Gross											8.1	SU	SU	N
KY0080845	Great Oaks WWTF	McCracken	001-1	07/31/2016	pH	00400-1-0	Effluent Gross							7.8	SU					SU	N
KY0080845	Great Oaks WWTF	McCracken	001-1	07/31/2016	pH	00400-1-0	Effluent Gross											7.8	SU	SU	N
KY0080845	Great Oaks WWTF	McCracken	001-1	06/30/2016	pH	00400-1-0	Effluent Gross							6.9	SU					SU	N
KY0080845	Great Oaks WWTF	McCracken	001-1	06/30/2016	pH	00400-1-0	Effluent Gross											6.9	SU	SU	N
KY0080845	Great Oaks WWTF	McCracken	001-1	05/31/2016	pH	00400-1-0	Effluent Gross							6.7	SU					SU	N
KY0080845	Great Oaks WWTF	McCracken	001-1	05/31/2016	pH	00400-1-0	Effluent Gross											6.7	SU	SU	N
KY0080845	Great Oaks WWTF	McCracken	001-1	04/30/2016	pH	00400-1-0	Effluent Gross							7.6	SU					SU	N
KY0080845	Great Oaks WWTF	McCracken	001-1	04/30/2016	pH	00400-1-0	Effluent Gross											7.6	SU	SU	N
KY0080845	Great Oaks WWTF	McCracken	001-1	03/31/2016	pH	00400-1-0	Effluent Gross							6.7	SU					SU	N
KY0080845	Great Oaks WWTF	McCracken	001-1	03/31/2016	pH	00400-1-0	Effluent Gross											6.7	SU	SU	N
KY0080845	Great Oaks WWTF	McCracken	001-1	02/29/2016	pH	00400-1-0	Effluent Gross							6.7	SU					SU	N
KY0080845	Great Oaks WWTF	McCracken	001-1	02/29/2016	pH	00400-1-0	Effluent Gross											6.7	SU	SU	N
KY0080845	Great Oaks WWTF	McCracken	001-1	01/31/2016	pH	00400-1-0	Effluent Gross							6.7	SU					SU	N
KY0080845	Great Oaks WWTF	McCracken	001-1	01/31/2016	pH	00400-1-0	Effluent Gross											6.7	SU	SU	N
KY0080845	Great Oaks WWTF	McCracken	001-1	12/31/2015	pH	00400-1-0	Effluent Gross							6.7	SU					SU	N
KY0080845	Great Oaks WWTF	McCracken	001-1	12/31/2015	pH	00400-1-0	Effluent Gross											6.7	SU	SU	N
KY0080845	Great Oaks WWTF	McCracken	001-1	11/30/2015	pH	00400-1-0	Effluent Gross							6.5	SU					SU	N
KY0080845	Great Oaks WWTF	McCracken	001-1	11/30/2015	pH	00400-1-0	Effluent Gross											6.5	SU	SU	N
KY0080845	Great Oaks WWTF	McCracken	001-1	10/31/2015	pH	00400-1-0	Effluent Gross							7.4	SU					SU	N
KY0080845	Great Oaks WWTF	McCracken	001-1	10/31/2015	pH	00400-1-0	Effluent Gross											7.4	SU	SU	N
KY0080845	Great Oaks WWTF	McCracken	001-1	09/30/2015	pH	00400-1-0	Effluent Gross							6.7	SU					SU	N
KY0080845	Great Oaks WWTF	McCracken	001-1	09/30/2015	pH	00400-1-0	Effluent Gross											6.7	SU	SU	N
KY0080845	Great Oaks WWTF	McCracken	001-1	08/31/2015	pH	00400-1-0	Effluent Gross							6.7	SU					SU	N
KY0080845	Great Oaks WWTF	McCracken	001-1	08/31/2015	pH	00400-1-0	Effluent Gross											6.7	SU	SU	N
KY0080845	Great Oaks WWTF	McCracken	001-1	07/31/2015	pH	00400-1-0	Effluent Gross							6.7	SU					SU	N
KY0080845	Great Oaks WWTF	McCracken	001-1	07/31/2015	pH	00400-1-0	Effluent Gross											6.7	SU	SU	N
KY0080845	Great Oaks WWTF	McCracken	001-1	06/30/2015	pH	00400-1-0	Effluent Gross							7.4	SU					SU	N
KY0080845	Great Oaks WWTF	McCracken	001-1	06/30/2015	pH	00400-1-0	Effluent Gross											7.4	SU	SU	N
KY0080845	Great Oaks WWTF	McCracken	001-1	05/31/2015	pH	00400-1-0	Effluent Gross							6.8	SU					SU	N
KY0080845	Great Oaks WWTF	McCracken	001-1	05/31/2015	pH	00400-1-0	Effluent Gross											6.8	SU	SU	N
KY0080845	Great Oaks WWTF	McCracken	001-1	04/30/2015	pH	00400-1-0	Effluent Gross							6.4	SU					SU	N
KY0080845	Great Oaks WWTF	McCracken	001-1	04/30/2015	pH	00400-1-0	Effluent Gross											6.4	SU	SU	N
KY0080845	Great Oaks WWTF	McCracken	001-1	03/31/2015	pH	00400-1-0	Effluent Gross							6.8	SU					SU	N
KY0080845	Great Oaks WWTF	McCracken	001-1	03/31/2015	pH	00400-1-0	Effluent Gross											6.8	SU	SU	N
KY0080845	Great Oaks WWTF	McCracken	001-1	02/28/2015	pH	00400-1-0	Effluent Gross							7.1	SU					SU	N
KY0080845	Great Oaks WWTF	McCracken	001-1	02/28/2015	pH	00400-1-0	Effluent Gross											7.1	SU	SU	N
KY0080845	Great Oaks WWTF	McCracken	001-1	01/31/2015	pH	00400-1-0	Effluent Gross							6.9	SU					SU	N
KY0080845	Great Oaks WWTF	McCracken	001-1	01/31/2015	pH	00400-1-0	Effluent Gross											6.9	SU	SU	N
KY0080845	Great Oaks WWTF	McCracken	001-1	12/31/2014	pH	00400-1-0	Effluent Gross							6.4	SU					SU	N
KY0080845	Great Oaks WWTF	McCracken	001-1	12/31/2014	pH	00400-1-0	Effluent Gross											6.4	SU	SU	N
KY0080845	Great Oaks WWTF	McCracken	001-1	11/30/2014	pH	00400-1-0	Effluent Gross							7.12	SU					SU	N
KY0080845	Great Oaks WWTF	McCracken	001-1	11/30/2014	pH	00400-1-0	Effluent Gross											7.12	SU	SU	N
KY0080845	Great Oaks WWTF	McCracken	001-1	10/31/2014	pH	00400-1-0	Effluent Gross							6.5	SU					SU	N
KY0080845	Great Oaks WWTF	McCracken	001-1	10/31/2014	pH	00400-1-0	Effluent Gross											6.5	SU	SU	N
KY0080845	Great Oaks WWTF	McCracken	001-1	09/30/2019	Solids, total suspended	00530-1-0	Effluent Gross		1		1		lb/d								N
KY0080845	Great Oaks WWTF	McCracken	001-1	09/30/2019	Solids, total suspended	00530-1-0	Effluent Gross									3		3		mg/L	N
KY0080845	Great Oaks WWTF	McCracken	001-1	08/31/2019	Solids, total suspended	00530-1-0	Effluent Gross		3		3		lb/d								N
KY0080845	Great Oaks WWTF	McCracken	001-1	08/31/2019	Solids, total suspended	00530-1-0	Effluent Gross									11		11		mg/L	N
KY0080845	Great Oaks WWTF	McCracken	001-1	07/31/2019	Solids, total suspended	00530-1-0	Effluent Gross						lb/d								N
KY0080845	Great Oaks WWTF	McCracken	001-1	07/31/2019	Solids, total suspended	00530-1-0	Effluent Gross													mg/L	N
KY0080845	Great Oaks WWTF	McCracken	001-1	06/30/2019	Solids, total suspended	00530-1-0	Effluent Gross						lb/d								N
KY0080845	Great Oaks WWTF	McCracken	001-1	06/30/2019	Solids, total suspended	00530-1-0	Effluent Gross													mg/L	N
KY0080845	Great Oaks WWTF	McCracken	001-1	05/31/2019	Solids, total suspended	00530-1-0	Effluent Gross						lb/d								N
KY0080845	Great Oaks WWTF	McCracken	001-1	05/31/2019	Solids, total suspended	00530-1-0	Effluent Gross													mg/L	N
KY0080845	Great Oaks WWTF	McCracken	001-1	04/30/2019	Solids, total suspended	00530-1-0	Effluent Gross						lb/d								N
KY0080845	Great Oaks WWTF	McCracken	001-1	04/30/2019	Solids, total suspended	00530-1-0	Effluent Gross													mg/L	N
KY0080845	Great Oaks WWTF	McCracken	001-1	03/31/2019	Solids, total suspended	00530-1-0	Effluent Gross		2.335	lb/d			lb/d								N
KY0080845	Great Oaks WWTF	McCracken	001-1	03/31/2019	Solids, total suspended	00530-1-0	Effluent Gross				2.335	lb/d	lb/d								N
KY0080845	Great Oaks WWTF	McCracken	001-1	03/31/2019	Solids, total suspended	00530-1-0	Effluent Gross									8	mg/L			mg/L	N
KY0080845	Great Oaks WWTF	McCracken	001-1	03/31/2019	Solids, total suspended	00530-1-0	Effluent Gross											8	mg/L	mg/L	N
KY0080845	Great Oaks WWTF	McCracken	001-1	02/28/2019	Solids, total suspended	00530-1-0	Effluent Gross		1.459	lb/d			lb/d								N
KY0080845	Great Oaks WWTF	McCracken	001-1	02/28/2019	Solids, total suspended	00530-1-0	Effluent Gross				1.459	lb/d	lb/d								N
KY0080845	Great Oaks WWTF	McCracken	001-1	02/28/2019	Solids, total suspended	00530-1-0	Effluent Gross									5	mg/L			mg/L	N
KY0080845	Great Oaks WWTF	McCracken	001-1	02/28/2019	Solids, total suspended	00530-1-0	Effluent Gross											5	mg/L	mg/L	N
KY0080845	Great Oaks WWTF	McCracken	001-1	01/31/2019	Solids, total suspended	00530-1-0	Effluent Gross		9.257	lb/d			lb/d								N
KY0080845	Great Oaks WWTF	McCracken	001-1	01/31/2019	Solids, total suspended	00530-1-0	Effluent Gross				9.257	lb/d	lb/d								N
KY0080845	Great Oaks WWTF	McCracken	001-1	01/31/2019	Solids, total suspended	00530-1-0	Effluent Gross	23								37	mg/L			mg/L	Y
KY0080845	Great Oaks WWTF	McCracken	001-1	01/31/2019	Solids, total suspended	00530-1-0	Effluent Gross											37	mg/L	mg/L	N
KY0080845	Great Oaks WWTF	McCracken	001-1	12/31/2018	Solids, total suspended	00530-1-0	Effluent Gross		8.757	lb/d			lb/d								N
KY0080845	Great Oaks WWTF	McCracken	001-1	12/31/2018	Solids, total suspended	00530-1-0	Effluent Gross				8.757	lb/d	lb/d								N
KY0080845	Great Oaks WWTF	McCracken	001-1	12/31/2018	Solids, total suspended	00530-1-0	Effluent Gross									30	mg/L			mg/L	N
KY0080845	Great Oaks WWTF	McCracken	001-1	12/31/2018	Solids, total suspended	00530-1-0	Effluent Gross											30	mg/L	mg/L	N
KY0080845	Great Oaks WWTF	McCracken	001-1	11/30/2018	Solids, total suspended	00530-1-0	Effluent Gross		9.107	lb/d			lb/d								N
KY0080845	Great Oaks WWTF	McCracken	001-1	11/30/2018	Solids, total suspended	00530-1-0	Effluent Gross				9.107	lb/d	lb/d								N
KY0080845	Great Oaks WWTF	McCracken	001-1	11/30/2018	Solids, total suspended	00530-1-0	Effluent Gross	30								39	mg/L			mg/L	Y
KY0080845	Great Oaks WWTF	McCracken	001-1	11/30/2018	Solids, total suspended	00530-1-0	Effluent Gross											39	mg/L	mg/L	N
KY0080845	Great Oaks WWTF	McCracken	001-1	10/31/2018	Solids, total suspended	00530-1-0	Effluent Gross		.9382	lb/d			lb/d								N
KY0080845	Great Oaks WWTF	McCracken	001-1	10/31/2018	Solids, total suspended	00530-1-0	Effluent Gross				.9382	lb/d	lb/d								N
KY0080845	Great Oaks WWTF	McCracken	001-1	10/31/2018	Solids, total suspended	00530-1-0	Effluent Gross									3	mg/L			mg/L	N
KY0080845	Great Oaks WWTF	McCracken	001-1	10/31/2018	Solids, total suspended	00530-1-0	Effluent Gross											3	mg/L	mg/L	N
KY0080845	Great Oaks WWTF	McCracken	001-1	09/30/2018	Solids, total suspended	00530-1-0	Effluent Gross		1.626	lb/d			lb/d								N
KY0080845	Great Oaks WWTF	McCracken	001-1	09/30/2018	Solids, total suspended	00530-1-0	Effluent Gross				1.626	lb/d	lb/d								N
KY0080845	Great Oaks WWTF	McCracken	001-1	09/30/2018	Solids, total suspended	00530-1-0	Effluent Gross									3	mg/L			mg/L	N
KY0080845	Great Oaks WWTF	McCracken	001-1	09/30/2018	Solids, total suspended	00530-1-0	Effluent Gross											3	mg/L	mg/L	N
KY0080845	Great Oaks WWTF	McCracken	001-1	08/31/2018	Solids, total suspended	00530-1-0	Effluent Gross		1.634	lb/d			lb/d								N
KY0080845	Great Oaks WWTF	McCracken	001-1	08/31/2018	Solids, total suspended	00530-1-0	Effluent Gross				1.634	lb/d	lb/d								N
KY0080845	Great Oaks WWTF	McCracken	001-1	08/31/2018	Solids, total suspended	00530-1-0	Effluent Gross									7	mg/L			mg/L	N
KY0080845	Great Oaks WWTF	McCracken	001-1	08/31/2018	Solids, total suspended	00530-1-0	Effluent Gross											7	mg/L	mg/L	N
KY0080845	Great Oaks WWTF	McCracken	001-1	07/31/2018	Solids, total suspended	00530-1-0	Effluent Gross		1.042	lb/d			lb/d								N
KY0080845	Great Oaks WWTF	McCracken	001-1	07/31/2018	Solids, total suspended	00530-1-0	Effluent Gross				1.042	lb/d	lb/d								N
KY0080845	Great Oaks WWTF	McCracken	001-1	07/31/2018	Solids, total suspended	00530-1-0	Effluent Gross									5	mg/L			mg/L	N
KY0080845	Great Oaks WWTF	McCracken	001-1	07/31/2018	Solids, total suspended	00530-1-0	Effluent Gross											5	mg/L	mg/L	N
KY0080845	Great Oaks WWTF	McCracken	001-1	06/30/2018	Solids, total suspended	00530-1-0	Effluent Gross		1.042	lb/d			lb/d								N
KY0080845	Great Oaks WWTF	McCracken	001-1	06/30/2018	Solids, total suspended	00530-1-0	Effluent Gross				1.042	lb/d	lb/d								N
KY0080845	Great Oaks WWTF	McCracken	001-1	06/30/2018	Solids, total suspended	00530-1-0	Effluent Gross									5	mg/L			mg/L	N
KY0080845	Great Oaks WWTF	McCracken	001-1	06/30/2018	Solids, total suspended	00530-1-0	Effluent Gross											5	mg/L	mg/L	N

KY0080845	Great Oaks WWTF	McCracken	001-1	05/31/2018	Solids, total suspended	00530-1-0	Effluent Gross		1.751	lb/d			lb/d									N
KY0080845	Great Oaks WWTF	McCracken	001-1	05/31/2018	Solids, total suspended	00530-1-0	Effluent Gross				1.751	lb/d	lb/d									N
KY0080845	Great Oaks WWTF	McCracken	001-1	05/31/2018	Solids, total suspended	00530-1-0	Effluent Gross									7	mg/L				mg/L	N
KY0080845	Great Oaks WWTF	McCracken	001-1	05/31/2018	Solids, total suspended	00530-1-0	Effluent Gross											7	mg/L	mg/L		N
KY0080845	Great Oaks WWTF	McCracken	001-1	04/30/2018	Solids, total suspended	00530-1-0	Effluent Gross						lb/d									N
KY0080845	Great Oaks WWTF	McCracken	001-1	04/30/2018	Solids, total suspended	00530-1-0	Effluent Gross													mg/L	N
KY0080845	Great Oaks WWTF	McCracken	001-1	03/31/2018	Solids, total suspended	00530-1-0	Effluent Gross		12	lb/d			lb/d									N
KY0080845	Great Oaks WWTF	McCracken	001-1	03/31/2018	Solids, total suspended	00530-1-0	Effluent Gross				12	lb/d	lb/d									N
KY0080845	Great Oaks WWTF	McCracken	001-1	03/31/2018	Solids, total suspended	00530-1-0	Effluent Gross	60								48	mg/L				mg/L	Y
KY0080845	Great Oaks WWTF	McCracken	001-1	03/31/2018	Solids, total suspended	00530-1-0	Effluent Gross	7										48	mg/L	mg/L		Y
KY0080845	Great Oaks WWTF	McCracken	001-1	02/28/2018	Solids, total suspended	00530-1-0	Effluent Gross		2.126	lb/d			lb/d									N
KY0080845	Great Oaks WWTF	McCracken	001-1	02/28/2018	Solids, total suspended	00530-1-0	Effluent Gross				2.126	lb/d	lb/d									N
KY0080845	Great Oaks WWTF	McCracken	001-1	02/28/2018	Solids, total suspended	00530-1-0	Effluent Gross									5	mg/L				mg/L	N
KY0080845	Great Oaks WWTF	McCracken	001-1	02/28/2018	Solids, total suspended	00530-1-0	Effluent Gross											5	mg/L	mg/L		N
KY0080845	Great Oaks WWTF	McCracken	001-1	01/31/2018	Solids, total suspended	00530-1-0	Effluent Gross		11.28	lb/d			lb/d									N
KY0080845	Great Oaks WWTF	McCracken	001-1	01/31/2018	Solids, total suspended	00530-1-0	Effluent Gross				11.28	lb/d	lb/d									N
KY0080845	Great Oaks WWTF	McCracken	001-1	01/31/2018	Solids, total suspended	00530-1-0	Effluent Gross	37								41	mg/L				mg/L	Y
KY0080845	Great Oaks WWTF	McCracken	001-1	01/31/2018	Solids, total suspended	00530-1-0	Effluent Gross											41	mg/L	mg/L		N
KY0080845	Great Oaks WWTF	McCracken	001-1	12/31/2017	Solids, total suspended	00530-1-0	Effluent Gross		1.251	lb/d			lb/d									N
KY0080845	Great Oaks WWTF	McCracken	001-1	12/31/2017	Solids, total suspended	00530-1-0	Effluent Gross				1.251	lb/d	lb/d									N
KY0080845	Great Oaks WWTF	McCracken	001-1	12/31/2017	Solids, total suspended	00530-1-0	Effluent Gross									5	mg/L				mg/L	N
KY0080845	Great Oaks WWTF	McCracken	001-1	12/31/2017	Solids, total suspended	00530-1-0	Effluent Gross											5	mg/L	mg/L		N
KY0080845	Great Oaks WWTF	McCracken	001-1	11/30/2017	Solids, total suspended	00530-1-0	Effluent Gross		2.752	lb/d			lb/d									N
KY0080845	Great Oaks WWTF	McCracken	001-1	11/30/2017	Solids, total suspended	00530-1-0	Effluent Gross				2.752	lb/d	lb/d									N
KY0080845	Great Oaks WWTF	McCracken	001-1	11/30/2017	Solids, total suspended	00530-1-0	Effluent Gross									10	mg/L				mg/L	N
KY0080845	Great Oaks WWTF	McCracken	001-1	11/30/2017	Solids, total suspended	00530-1-0	Effluent Gross											10	mg/L	mg/L		N
KY0080845	Great Oaks WWTF	McCracken	001-1	10/31/2017	Solids, total suspended	00530-1-0	Effluent Gross		1.042	lb/d			lb/d									N
KY0080845	Great Oaks WWTF	McCracken	001-1	10/31/2017	Solids, total suspended	00530-1-0	Effluent Gross				1.042	lb/d	lb/d									N
KY0080845	Great Oaks WWTF	McCracken	001-1	10/31/2017	Solids, total suspended	00530-1-0	Effluent Gross									5	mg/L				mg/L	N
KY0080845	Great Oaks WWTF	McCracken	001-1	10/31/2017	Solids, total suspended	00530-1-0	Effluent Gross											5	mg/L	mg/L		N
KY0080845	Great Oaks WWTF	McCracken	001-1	09/30/2017	Solids, total suspended	00530-1-0	Effluent Gross		2.001	lb/d			lb/d									N
KY0080845	Great Oaks WWTF	McCracken	001-1	09/30/2017	Solids, total suspended	00530-1-0	Effluent Gross				2.001	lb/d	lb/d									N
KY0080845	Great Oaks WWTF	McCracken	001-1	09/30/2017	Solids, total suspended	00530-1-0	Effluent Gross									8	mg/L				mg/L	N
KY0080845	Great Oaks WWTF	McCracken	001-1	09/30/2017	Solids, total suspended	00530-1-0	Effluent Gross											8	mg/L	mg/L		N
KY0080845	Great Oaks WWTF	McCracken	001-1	08/31/2017	Solids, total suspended	00530-1-0	Effluent Gross		2.777	lb/d			lb/d									N
KY0080845	Great Oaks WWTF	McCracken	001-1	08/31/2017	Solids, total suspended	00530-1-0	Effluent Gross				2.777	lb/d	lb/d									N
KY0080845	Great Oaks WWTF	McCracken	001-1	08/31/2017	Solids, total suspended	00530-1-0	Effluent Gross									9	mg/L				mg/L	N
KY0080845	Great Oaks WWTF	McCracken	001-1	08/31/2017	Solids, total suspended	00530-1-0	Effluent Gross											9	mg/L	mg/L		N
KY0080845	Great Oaks WWTF	McCracken	001-1	07/31/2017	Solids, total suspended	00530-1-0	Effluent Gross		1.668	lb/d			lb/d									N
KY0080845	Great Oaks WWTF	McCracken	001-1	07/31/2017	Solids, total suspended	00530-1-0	Effluent Gross				1.668	lb/d	lb/d									N
KY0080845	Great Oaks WWTF	McCracken	001-1	07/31/2017	Solids, total suspended	00530-1-0	Effluent Gross									10	mg/L				mg/L	N
KY0080845	Great Oaks WWTF	McCracken	001-1	07/31/2017	Solids, total suspended	00530-1-0	Effluent Gross											10	mg/L	mg/L		N
KY0080845	Great Oaks WWTF	McCracken	001-1	06/30/2017	Solids, total suspended	00530-1-0	Effluent Gross		1.0425	lb/d			lb/d									N
KY0080845	Great Oaks WWTF	McCracken	001-1	06/30/2017	Solids, total suspended	00530-1-0	Effluent Gross				1.0425	lb/d	lb/d									N
KY0080845	Great Oaks WWTF	McCracken	001-1	06/30/2017	Solids, total suspended	00530-1-0	Effluent Gross									5	mg/L				mg/L	N
KY0080845	Great Oaks WWTF	McCracken	001-1	06/30/2017	Solids, total suspended	00530-1-0	Effluent Gross											5	mg/L	mg/L		N
KY0080845	Great Oaks WWTF	McCracken	001-1	05/31/2017	Solids, total suspended	00530-1-0	Effluent Gross		1.251	lb/d			lb/d									N
KY0080845	Great Oaks WWTF	McCracken	001-1	05/31/2017	Solids, total suspended	00530-1-0	Effluent Gross				1.251	lb/d	lb/d									N
KY0080845	Great Oaks WWTF	McCracken	001-1	05/31/2017	Solids, total suspended	00530-1-0	Effluent Gross									5	mg/L				mg/L	N
KY0080845	Great Oaks WWTF	McCracken	001-1	05/31/2017	Solids, total suspended	00530-1-0	Effluent Gross											5	mg/L	mg/L		N
KY0080845	Great Oaks WWTF	McCracken	001-1	04/30/2017	Solids, total suspended	00530-1-0	Effluent Gross		1.5429	lb/d			lb/d									N
KY0080845	Great Oaks WWTF	McCracken	001-1	04/30/2017	Solids, total suspended	00530-1-0	Effluent Gross				1.5429	lb/d	lb/d									N
KY0080845	Great Oaks WWTF	McCracken	001-1	04/30/2017	Solids, total suspended	00530-1-0	Effluent Gross									5	mg/L				mg/L	N
KY0080845	Great Oaks WWTF	McCracken	001-1	04/30/2017	Solids, total suspended	00530-1-0	Effluent Gross											5	mg/L	mg/L		N
KY0080845	Great Oaks WWTF	McCracken	001-1	03/31/2017	Solids, total suspended	00530-1-0	Effluent Gross		1.876	lb/d			lb/d									N
KY0080845	Great Oaks WWTF	McCracken	001-1	03/31/2017	Solids, total suspended	00530-1-0	Effluent Gross				1.876	lb/d	lb/d									N
KY0080845	Great Oaks WWTF	McCracken	001-1	03/31/2017	Solids, total suspended	00530-1-0	Effluent Gross									5	mg/L				mg/L	N
KY0080845	Great Oaks WWTF	McCracken	001-1	03/31/2017	Solids, total suspended	00530-1-0	Effluent Gross											5	mg/L	mg/L		N
KY0080845	Great Oaks WWTF	McCracken	001-1	02/28/2017	Solids, total suspended	00530-1-0	Effluent Gross		1.251	lb/d			lb/d									N
KY0080845	Great Oaks WWTF	McCracken	001-1	02/28/2017	Solids, total suspended	00530-1-0	Effluent Gross				1.251	lb/d	lb/d									N
KY0080845	Great Oaks WWTF	McCracken	001-1	02/28/2017	Solids, total suspended	00530-1-0	Effluent Gross									5	mg/L				mg/L	N
KY0080845	Great Oaks WWTF	McCracken	001-1	02/28/2017	Solids, total suspended	00530-1-0	Effluent Gross											5	mg/L	mg/L		N
KY0080845	Great Oaks WWTF	McCracken	001-1	01/31/2017	Solids, total suspended	00530-1-0	Effluent Gross		1.459	lb/d			lb/d									N
KY0080845	Great Oaks WWTF	McCracken	001-1	01/31/2017	Solids, total suspended	00530-1-0	Effluent Gross				1.459	lb/d	lb/d									N
KY0080845	Great Oaks WWTF	McCracken	001-1	01/31/2017	Solids, total suspended	00530-1-0	Effluent Gross									5	mg/L				mg/L	N
KY0080845	Great Oaks WWTF	McCracken	001-1	01/31/2017	Solids, total suspended	00530-1-0	Effluent Gross											5	mg/L	mg/L		N
KY0080845	Great Oaks WWTF	McCracken	001-1	12/31/2016	Solids, total suspended	00530-1-0	Effluent Gross		1.125	lb/d			lb/d									N
KY0080845	Great Oaks WWTF	McCracken	001-1	12/31/2016	Solids, total suspended	00530-1-0	Effluent Gross				1.125	lb/d	lb/d									N
KY0080845	Great Oaks WWTF	McCracken	001-1	12/31/2016	Solids, total suspended	00530-1-0	Effluent Gross									5	mg/L				mg/L	N
KY0080845	Great Oaks WWTF	McCracken	001-1	12/31/2016	Solids, total suspended	00530-1-0	Effluent Gross											5	mg/L	mg/L		N
KY0080845	Great Oaks WWTF	McCracken	001-1	11/30/2016	Solids, total suspended	00530-1-0	Effluent Gross		2.085	lb/d			lb/d									N
KY0080845	Great Oaks WWTF	McCracken	001-1	11/30/2016	Solids, total suspended	00530-1-0	Effluent Gross				2.085	lb/d	lb/d									N
KY0080845	Great Oaks WWTF	McCracken	001-1	11/30/2016	Solids, total suspended	00530-1-0	Effluent Gross									5	mg/L				mg/L	N
KY0080845	Great Oaks WWTF	McCracken	001-1	11/30/2016	Solids, total suspended	00530-1-0	Effluent Gross											5	mg/L	mg/L		N
KY0080845	Great Oaks WWTF	McCracken	001-1	10/31/2016	Solids, total suspended	00530-1-0	Effluent Gross		1.459	lb/d			lb/d									N
KY0080845	Great Oaks WWTF	McCracken	001-1	10/31/2016	Solids, total suspended	00530-1-0	Effluent Gross				1.459	lb/d	lb/d									N
KY0080845	Great Oaks WWTF	McCracken	001-1	10/31/2016	Solids, total suspended	00530-1-0	Effluent Gross									5	mg/L				mg/L	N
KY0080845	Great Oaks WWTF	McCracken	001-1	10/31/2016	Solids, total suspended	00530-1-0	Effluent Gross											5	mg/L	mg/L		N
KY0080845	Great Oaks WWTF	McCracken	001-1	09/30/2016	Solids, total suspended	00530-1-0	Effluent Gross		1.459	lb/d			lb/d									N
KY0080845	Great Oaks WWTF	McCracken	001-1	09/30/2016	Solids, total suspended	00530-1-0	Effluent Gross				1.459	lb/d	lb/d									N
KY0080845	Great Oaks WWTF	McCracken	001-1	09/30/2016	Solids, total suspended	00530-1-0	Effluent Gross									5	mg/L				mg/L	N
KY0080845	Great Oaks WWTF	McCracken	001-1	09/30/2016	Solids, total suspended	00530-1-0	Effluent Gross											5	mg/L	mg/L		N
KY0080845	Great Oaks WWTF	McCracken	001-1	08/31/2016	Solids, total suspended	00530-1-0	Effluent Gross		1.042	lb/d			lb/d									N
KY0080845	Great Oaks WWTF	McCracken	001-1	08/31/2016	Solids, total suspended	00530-1-0	Effluent Gross				1.042	lb/d	lb/d									N
KY0080845	Great Oaks WWTF	McCracken	001-1	08/31/2016	Solids, total suspended	00530-1-0	Effluent Gross									5	mg/L				mg/L	N
KY0080845	Great Oaks WWTF	McCracken	001-1	08/31/2016	Solids, total suspended	00530-1-0	Effluent Gross											5	mg/L	mg/L		N
KY0080845	Great Oaks WWTF	McCracken	001-1	07/31/2016	Solids, total suspended	00530-1-0	Effluent Gross		3.21	lb/d			lb/d									N
KY0080845	Great Oaks WWTF	McCracken	001-1	07/31/2016	Solids, total suspended	00530-1-0	Effluent Gross				3.21	lb/d	lb/d									N
KY0080845	Great Oaks WWTF	McCracken	001-1	07/31/2016	Solids, total suspended	00530-1-0	Effluent Gross									7	mg/L				mg/L	N
KY0080845	Great Oaks WWTF	McCracken	001-1	07/31/2016	Solids, total suspended	00530-1-0	Effluent Gross											7	mg/L	mg/L		N
KY0080845	Great Oaks WWTF	McCracken	001-1	06/30/2016	Solids, total suspended	00530-1-0	Effluent Gross		1.459	lb/d			lb/d									N
KY0080845	Great Oaks WWTF	McCracken	001-1	06/30/2016	Solids, total suspended	00530-1-0	Effluent Gross				1.459	lb/d	lb/d									N
KY0080845	Great Oaks WWTF	McCracken	001-1	06/30/2016	Solids, total suspended	00530-1-0	Effluent Gross									5	mg/L				mg/L	N
KY0080845	Great Oaks WWTF	McCracken	001-1	06/30/2016	Solids, total suspended	00530-1-0	Effluent Gross											5	mg/L	mg/L		N
KY0080845	Great Oaks WWTF	McCracken	001-1	05/31/2016	Solids, total suspended	00530-1-0	Effluent Gross		1.668	lb/d			lb/d									N
KY0080845	Great Oaks WWTF	McCracken	001-1	05/31/2016	Solids, total suspended	00530-1-0	Effluent Gross				1.668	lb/d	lb/d									N
KY0080845	Great Oaks WWTF	McCracken	001-1	05/31/2016	Solids, total suspended	00530-1-0	Effluent Gross									5	mg/L				mg/L	N
KY0080845	Great Oaks WWTF	McCracken	001-1	05/31/2016	Solids, total suspended	00530-1-0	Effluent Gross											5	mg/L	mg/L		N
KY0080845	Great Oaks WWTF	McCracken	001-1	04/30/2016	Solids, total suspended	00530-1-0	Effluent Gross		2.085	lb/d			lb/d									N
KY0080845	Great Oaks WWTF	McCracken	001-1	04/30/2016	Solids, total suspended	00530-1-0	Effluent Gross				2.085	lb/d	lb/d									N
KY0080845	Great Oaks WWTF	McCracken	001-1	04/30/2016	Solids, total suspended	00530-1-0	Effluent Gross									5	mg/L				mg/L	N
KY0080845	Great Oaks WWTF	McCracken	001-1	04/30/2016	Solids, total suspended	00530-1-0	Effluent Gross											5	mg/L	mg/L		N
KY0080845	Great Oaks WWTF	McCracken	001-1	03/31/2016	Solids, total suspended	00530-1-0	Effluent Gross		2.085	lb/d			lb/d									N
KY0080845	Great Oaks WWTF	McCracken	001-1	03/31/2016	Solids, total suspended	00530-1-0	Effluent Gross				2.085	lb/d	lb/d									N
KY0080845	Great Oaks WWTF	McCracken	001-1	03/31/2016	Solids, total suspended	00530-1-0	Effluent Gross									5	mg/L				mg/L	N
KY0080845	Great Oaks WWTF	McCracken	001-1	03/31/2016	Solids, total suspended	00530-1-0	Effluent Gross											5	mg/L	mg/L		N
KY0080845	Great Oaks WWTF	McCracken	001-1	02/29/2016	Solids, total suspended	00530-1-0	Effluent Gross		5.004	lb/d			lb/d									N
KY0080845	Great Oaks WWTF	McCracken	001-1	02/29/2016	Solids, total suspended	00530-1-0	Effluent Gross				5.004	lb/d	lb/d									N
KY0080845	Great Oaks WWTF	McCracken	001-1	02/29/2016	Solids, total suspended	00530-1-0	Effluent Gross									15	mg/L				mg/L	N
KY0080845	Great Oaks WWTF	McCracken	001-1	02/29/2016	Solids, total suspended	00530-1-0	Effluent Gross											15	mg/L	mg/L		N
KY0080845	Great Oaks WWTF	McCracken	001-1	01/31/2016	Solids, total suspended	00530-1-0	Effluent Gross		1.042	lb/d			lb/d									N
KY0080845	Great Oaks WWTF	McCracken	001-1	01/31/2016	Solids, total suspended	00530-1-0	Effluent Gross				1.042	lb/d	lb/d									N
KY0080845	Great Oaks WWTF	McCracken	001-1	01/31/2016	Solids, total suspended	00530-1-0	Effluent Gross									5	mg/L				mg/L	N
KY0080845	Great Oaks WWTF	McCracken	001-1	01/31/2016	Solids, total suspended	00530-1-0	Effluent Gross											5	mg/L	mg/L		N

KY0080845	Great Oaks WWTF	McCracken	001-1	12/31/2015	Solids, total suspended	00530-1-0	Effluent Gross		1.668	lb/d			lb/d								N
KY0080845	Great Oaks WWTF	McCracken	001-1	12/31/2015	Solids, total suspended	00530-1-0	Effluent Gross				1.668	lb/d	lb/d								N
KY0080845	Great Oaks WWTF	McCracken	001-1	12/31/2015	Solids, total suspended	00530-1-0	Effluent Gross									5	mg/L			mg/L	N
KY0080845	Great Oaks WWTF	McCracken	001-1	12/31/2015	Solids, total suspended	00530-1-0	Effluent Gross											5	mg/L	mg/L	N
KY0080845	Great Oaks WWTF	McCracken	001-1	11/30/2015	Solids, total suspended	00530-1-0	Effluent Gross		1.376	lb/d			lb/d								N
KY0080845	Great Oaks WWTF	McCracken	001-1	11/30/2015	Solids, total suspended	00530-1-0	Effluent Gross				1.376	lb/d	lb/d								N
KY0080845	Great Oaks WWTF	McCracken	001-1	11/30/2015	Solids, total suspended	00530-1-0	Effluent Gross									5	mg/L			mg/L	N
KY0080845	Great Oaks WWTF	McCracken	001-1	11/30/2015	Solids, total suspended	00530-1-0	Effluent Gross											5	mg/L	mg/L	N
KY0080845	Great Oaks WWTF	McCracken	001-1	10/31/2015	Solids, total suspended	00530-1-0	Effluent Gross		1.751	lb/d			lb/d								N
KY0080845	Great Oaks WWTF	McCracken	001-1	10/31/2015	Solids, total suspended	00530-1-0	Effluent Gross				1.751	lb/d	lb/d								N
KY0080845	Great Oaks WWTF	McCracken	001-1	10/31/2015	Solids, total suspended	00530-1-0	Effluent Gross									5	mg/L			mg/L	N
KY0080845	Great Oaks WWTF	McCracken	001-1	10/31/2015	Solids, total suspended	00530-1-0	Effluent Gross											5	mg/L	mg/L	N
KY0080845	Great Oaks WWTF	McCracken	001-1	09/30/2015	Solids, total suspended	00530-1-0	Effluent Gross		2.1684	lb/d			lb/d								N
KY0080845	Great Oaks WWTF	McCracken	001-1	09/30/2015	Solids, total suspended	00530-1-0	Effluent Gross				2.1684	lb/d	lb/d								N
KY0080845	Great Oaks WWTF	McCracken	001-1	09/30/2015	Solids, total suspended	00530-1-0	Effluent Gross									5	mg/L			mg/L	N
KY0080845	Great Oaks WWTF	McCracken	001-1	09/30/2015	Solids, total suspended	00530-1-0	Effluent Gross											5	mg/L	mg/L	N
KY0080845	Great Oaks WWTF	McCracken	001-1	08/31/2015	Solids, total suspended	00530-1-0	Effluent Gross		6.672	lb/d			lb/d								N
KY0080845	Great Oaks WWTF	McCracken	001-1	08/31/2015	Solids, total suspended	00530-1-0	Effluent Gross				6.672	lb/d	lb/d								N
KY0080845	Great Oaks WWTF	McCracken	001-1	08/31/2015	Solids, total suspended	00530-1-0	Effluent Gross									25	mg/L			mg/L	N
KY0080845	Great Oaks WWTF	McCracken	001-1	08/31/2015	Solids, total suspended	00530-1-0	Effluent Gross											25	mg/L	mg/L	N
KY0080845	Great Oaks WWTF	McCracken	001-1	07/31/2015	Solids, total suspended	00530-1-0	Effluent Gross		1.251	lb/d			lb/d								N
KY0080845	Great Oaks WWTF	McCracken	001-1	07/31/2015	Solids, total suspended	00530-1-0	Effluent Gross				1.251	lb/d	lb/d								N
KY0080845	Great Oaks WWTF	McCracken	001-1	07/31/2015	Solids, total suspended	00530-1-0	Effluent Gross									5	mg/L			mg/L	N
KY0080845	Great Oaks WWTF	McCracken	001-1	07/31/2015	Solids, total suspended	00530-1-0	Effluent Gross											5	mg/L	mg/L	N
KY0080845	Great Oaks WWTF	McCracken	001-1	06/30/2015	Solids, total suspended	00530-1-0	Effluent Gross		1.459	lb/d			lb/d								N
KY0080845	Great Oaks WWTF	McCracken	001-1	06/30/2015	Solids, total suspended	00530-1-0	Effluent Gross				1.459	lb/d	lb/d								N
KY0080845	Great Oaks WWTF	McCracken	001-1	06/30/2015	Solids, total suspended	00530-1-0	Effluent Gross									5	mg/L			mg/L	N
KY0080845	Great Oaks WWTF	McCracken	001-1	06/30/2015	Solids, total suspended	00530-1-0	Effluent Gross											5	mg/L	mg/L	N
KY0080845	Great Oaks WWTF	McCracken	001-1	05/31/2015	Solids, total suspended	00530-1-0	Effluent Gross		.7506	lb/d			lb/d								N
KY0080845	Great Oaks WWTF	McCracken	001-1	05/31/2015	Solids, total suspended	00530-1-0	Effluent Gross				.7506	lb/d	lb/d								N
KY0080845	Great Oaks WWTF	McCracken	001-1	05/31/2015	Solids, total suspended	00530-1-0	Effluent Gross									5	mg/L			mg/L	N
KY0080845	Great Oaks WWTF	McCracken	001-1	05/31/2015	Solids, total suspended	00530-1-0	Effluent Gross											5	mg/L	mg/L	N
KY0080845	Great Oaks WWTF	McCracken	001-1	04/30/2015	Solids, total suspended	00530-1-0	Effluent Gross		1.668	lb/d			lb/d								N
KY0080845	Great Oaks WWTF	McCracken	001-1	04/30/2015	Solids, total suspended	00530-1-0	Effluent Gross				1.668	lb/d	lb/d								N
KY0080845	Great Oaks WWTF	McCracken	001-1	04/30/2015	Solids, total suspended	00530-1-0	Effluent Gross									5	mg/L			mg/L	N
KY0080845	Great Oaks WWTF	McCracken	001-1	04/30/2015	Solids, total suspended	00530-1-0	Effluent Gross											5	mg/L	mg/L	N
KY0080845	Great Oaks WWTF	McCracken	001-1	03/31/2015	Solids, total suspended	00530-1-0	Effluent Gross		1.751	lb/d			lb/d								N
KY0080845	Great Oaks WWTF	McCracken	001-1	03/31/2015	Solids, total suspended	00530-1-0	Effluent Gross				1.751	lb/d	lb/d								N
KY0080845	Great Oaks WWTF	McCracken	001-1	03/31/2015	Solids, total suspended	00530-1-0	Effluent Gross									5	mg/L			mg/L	N
KY0080845	Great Oaks WWTF	McCracken	001-1	03/31/2015	Solids, total suspended	00530-1-0	Effluent Gross											5	mg/L	mg/L	N
KY0080845	Great Oaks WWTF	McCracken	001-1	02/28/2015	Solids, total suspended	00530-1-0	Effluent Gross		1.459	lb/d			lb/d								N
KY0080845	Great Oaks WWTF	McCracken	001-1	02/28/2015	Solids, total suspended	00530-1-0	Effluent Gross				1.459	lb/d	lb/d								N
KY0080845	Great Oaks WWTF	McCracken	001-1	02/28/2015	Solids, total suspended	00530-1-0	Effluent Gross									5	mg/L			mg/L	N
KY0080845	Great Oaks WWTF	McCracken	001-1	02/28/2015	Solids, total suspended	00530-1-0	Effluent Gross											5	mg/L	mg/L	N
KY0080845	Great Oaks WWTF	McCracken	001-1	01/31/2015	Solids, total suspended	00530-1-0	Effluent Gross		1.709	lb/d			lb/d								N
KY0080845	Great Oaks WWTF	McCracken	001-1	01/31/2015	Solids, total suspended	00530-1-0	Effluent Gross				1.709	lb/d	lb/d								N
KY0080845	Great Oaks WWTF	McCracken	001-1	01/31/2015	Solids, total suspended	00530-1-0	Effluent Gross									5	mg/L			mg/L	N
KY0080845	Great Oaks WWTF	McCracken	001-1	01/31/2015	Solids, total suspended	00530-1-0	Effluent Gross											5	mg/L	mg/L	N
KY0080845	Great Oaks WWTF	McCracken	001-1	12/31/2014	Solids, total suspended	00530-1-0	Effluent Gross		1.751	lb/d			lb/d								N
KY0080845	Great Oaks WWTF	McCracken	001-1	12/31/2014	Solids, total suspended	00530-1-0	Effluent Gross				1.751	lb/d	lb/d								N
KY0080845	Great Oaks WWTF	McCracken	001-1	12/31/2014	Solids, total suspended	00530-1-0	Effluent Gross									5	mg/L			mg/L	N
KY0080845	Great Oaks WWTF	McCracken	001-1	12/31/2014	Solids, total suspended	00530-1-0	Effluent Gross											5	mg/L	mg/L	N
KY0080845	Great Oaks WWTF	McCracken	001-1	11/30/2014	Solids, total suspended	00530-1-0	Effluent Gross		1.751	lb/d			lb/d								N
KY0080845	Great Oaks WWTF	McCracken	001-1	11/30/2014	Solids, total suspended	00530-1-0	Effluent Gross				1.751	lb/d	lb/d								N
KY0080845	Great Oaks WWTF	McCracken	001-1	11/30/2014	Solids, total suspended	00530-1-0	Effluent Gross									6	mg/L			mg/L	N
KY0080845	Great Oaks WWTF	McCracken	001-1	11/30/2014	Solids, total suspended	00530-1-0	Effluent Gross											6	mg/L	mg/L	N
KY0080845	Great Oaks WWTF	McCracken	001-1	10/31/2014	Solids, total suspended	00530-1-0	Effluent Gross		1.334	lb/d			lb/d								N
KY0080845	Great Oaks WWTF	McCracken	001-1	10/31/2014	Solids, total suspended	00530-1-0	Effluent Gross				1.334	lb/d	lb/d								N
KY0080845	Great Oaks WWTF	McCracken	001-1	10/31/2014	Solids, total suspended	00530-1-0	Effluent Gross									5	mg/L			mg/L	N
KY0080845	Great Oaks WWTF	McCracken	001-1	10/31/2014	Solids, total suspended	00530-1-0	Effluent Gross											5	mg/L	mg/L	N
KY0080845	Great Oaks WWTF	McCracken	001-1	09/30/2019	Nitrogen, ammonia total [as	00610-1-1	Effluent Gross		.12		.12		lb/d								N
KY0080845	Great Oaks WWTF	McCracken	001-1	09/30/2019	Nitrogen, ammonia total [as	00610-1-1	Effluent Gross									.52		.52		mg/L	N
KY0080845	Great Oaks WWTF	McCracken	001-1	08/31/2019	Nitrogen, ammonia total [as	00610-1-1	Effluent Gross	182	6.61		6.61		lb/d								Y
KY0080845	Great Oaks WWTF	McCracken	001-1	08/31/2019	Nitrogen, ammonia total [as	00610-1-1	Effluent Gross	563								26.5		26.5		mg/L	Y
KY0080845	Great Oaks WWTF	McCracken	001-1	07/31/2019	Nitrogen, ammonia total [as	00610-1-1	Effluent Gross						lb/d								N
KY0080845	Great Oaks WWTF	McCracken	001-1	07/31/2019	Nitrogen, ammonia total [as	00610-1-1	Effluent Gross													mg/L	N
KY0080845	Great Oaks WWTF	McCracken	001-1	06/30/2019	Nitrogen, ammonia total [as	00610-1-1	Effluent Gross						lb/d								N
KY0080845	Great Oaks WWTF	McCracken	001-1	06/30/2019	Nitrogen, ammonia total [as	00610-1-1	Effluent Gross													mg/L	N
KY0080845	Great Oaks WWTF	McCracken	001-1	05/31/2019	Nitrogen, ammonia total [as	00610-1-1	Effluent Gross						lb/d								N
KY0080845	Great Oaks WWTF	McCracken	001-1	05/31/2019	Nitrogen, ammonia total [as	00610-1-1	Effluent Gross													mg/L	N
KY0080845	Great Oaks WWTF	McCracken	001-1	10/31/2018	Nitrogen, ammonia total [as	00610-1-1	Effluent Gross		.0781	lb/d			lb/d								N
KY0080845	Great Oaks WWTF	McCracken	001-1	10/31/2018	Nitrogen, ammonia total [as	00610-1-1	Effluent Gross				.0781	lb/d	lb/d								N
KY0080845	Great Oaks WWTF	McCracken	001-1	10/31/2018	Nitrogen, ammonia total [as	00610-1-1	Effluent Gross									.25	mg/L			mg/L	N
KY0080845	Great Oaks WWTF	McCracken	001-1	10/31/2018	Nitrogen, ammonia total [as	00610-1-1	Effluent Gross											.25	mg/L	mg/L	N
KY0080845	Great Oaks WWTF	McCracken	001-1	09/30/2018	Nitrogen, ammonia total [as	00610-1-1	Effluent Gross		.1355	lb/d			lb/d								N
KY0080845	Great Oaks WWTF	McCracken	001-1	09/30/2018	Nitrogen, ammonia total [as	00610-1-1	Effluent Gross				.1355	lb/d	lb/d								N
KY0080845	Great Oaks WWTF	McCracken	001-1	09/30/2018	Nitrogen, ammonia total [as	00610-1-1	Effluent Gross									.25	mg/L			mg/L	N
KY0080845	Great Oaks WWTF	McCracken	001-1	09/30/2018	Nitrogen, ammonia total [as	00610-1-1	Effluent Gross											.25	mg/L	mg/L	N
KY0080845	Great Oaks WWTF	McCracken	001-1	08/31/2018	Nitrogen, ammonia total [as	00610-1-1	Effluent Gross	139	5.604	lb/d			lb/d								Y
KY0080845	Great Oaks WWTF	McCracken	001-1	08/31/2018	Nitrogen, ammonia total [as	00610-1-1	Effluent Gross	60			5.604	lb/d	lb/d								Y
KY0080845	Great Oaks WWTF	McCracken	001-1	08/31/2018	Nitrogen, ammonia total [as	00610-1-1	Effluent Gross	500								24	mg/L			mg/L	Y
KY0080845	Great Oaks WWTF	McCracken	001-1	08/31/2018	Nitrogen, ammonia total [as	00610-1-1	Effluent Gross	300										24	mg/L	mg/L	Y
KY0080845	Great Oaks WWTF	McCracken	001-1	07/31/2018	Nitrogen, ammonia total [as	00610-1-1	Effluent Gross	87	4.378	lb/d			lb/d								Y
KY0080845	Great Oaks WWTF	McCracken	001-1	07/31/2018	Nitrogen, ammonia total [as	00610-1-1	Effluent Gross	25			4.378	lb/d	lb/d								Y
KY0080845	Great Oaks WWTF	McCracken	001-1	07/31/2018	Nitrogen, ammonia total [as	00610-1-1	Effluent Gross	425								21	mg/L			mg/L	Y
KY0080845	Great Oaks WWTF	McCracken	001-1	07/31/2018	Nitrogen, ammonia total [as	00610-1-1	Effluent Gross	250										21	mg/L	mg/L	Y
KY0080845	Great Oaks WWTF	McCracken	001-1	06/30/2018	Nitrogen, ammonia total [as	00610-1-1	Effluent Gross		.0521	lb/d			lb/d								N
KY0080845	Great Oaks WWTF	McCracken	001-1	06/30/2018	Nitrogen, ammonia total [as	00610-1-1	Effluent Gross				.0521	lb/d	lb/d								N
KY0080845	Great Oaks WWTF	McCracken	001-1	06/30/2018	Nitrogen, ammonia total [as	00610-1-1	Effluent Gross									.25	mg/L			mg/L	N
KY0080845	Great Oaks WWTF	McCracken	001-1	06/30/2018	Nitrogen, ammonia total [as	00610-1-1	Effluent Gross											.25	mg/L	mg/L	N
KY0080845	Great Oaks WWTF	McCracken	001-1	05/31/2018	Nitrogen, ammonia total [as	00610-1-1	Effluent Gross	82	4.253	lb/d			lb/d								Y
KY0080845	Great Oaks WWTF	McCracken	001-1	05/31/2018	Nitrogen, ammonia total [as	00610-1-1	Effluent Gross	22			4.253	lb/d	lb/d								Y
KY0080845	Great Oaks WWTF	McCracken	001-1	05/31/2018	Nitrogen, ammonia total [as	00610-1-1	Effluent Gross	325								17	mg/L			mg/L	Y
KY0080845	Great Oaks WWTF	McCracken	001-1	05/31/2018	Nitrogen, ammonia total [as	00610-1-1	Effluent Gross	183										17	mg/L	mg/L	Y
KY0080845	Great Oaks WWTF	McCracken	001-1	10/31/2017	Nitrogen, ammonia total [as	00610-1-1	Effluent Gross		.417	lb/d			lb/d								N
KY0080845	Great Oaks WWTF	McCracken	001-1	10/31/2017	Nitrogen, ammonia total [as	00610-1-1	Effluent Gross				.417	lb/d	lb/d								N
KY0080845	Great Oaks WWTF	McCracken	001-1	10/31/2017	Nitrogen, ammonia total [as	00610-1-1	Effluent Gross									2	mg/L			mg/L	N
KY0080845	Great Oaks WWTF	McCracken	001-1	10/31/2017	Nitrogen, ammonia total [as	00610-1-1	Effluent Gross											2	mg/L	mg/L	N
KY0080845	Great Oaks WWTF	McCracken	001-1	09/30/2017	Nitrogen, ammonia total [as	00610-1-1	Effluent Gross		.0625	lb/d			lb/d								N
KY0080845	Great Oaks WWTF	McCracken	001-1	09/30/2017	Nitrogen, ammonia total [as	00610-1-1	Effluent Gross				.0625	lb/d	lb/d								N
KY0080845	Great Oaks WWTF	McCracken	001-1	09/30/2017	Nitrogen, ammonia total [as	00610-1-1	Effluent Gross									.25	mg/L			mg/L	N
KY0080845	Great Oaks WWTF	McCracken	001-1	09/30/2017	Nitrogen, ammonia total [as	00610-1-1	Effluent Gross											.25	mg/L	mg/L	N
KY0080845	Great Oaks WWTF	McCracken	001-1	08/31/2017	Nitrogen, ammonia total [as	00610-1-1	Effluent Gross		.0771	lb/d			lb/d								N
KY0080845	Great Oaks WWTF	McCracken	001-1	08/31/2017	Nitrogen, ammonia total [as	00610-1-1	Effluent Gross				.0771	lb/d	lb/d								N
KY0080845	Great Oaks WWTF	McCracken	001-1	08/31/2017	Nitrogen, ammonia total [as	00610-1-1	Effluent Gross									.25	mg/L			mg/L	N
KY0080845	Great Oaks WWTF	McCracken	001-1	08/31/2017	Nitrogen, ammonia total [as	00610-1-1	Effluent Gross											.25	mg/L	mg/L	N
KY0080845	Great Oaks WWTF	McCracken	001-1	07/31/2017	Nitrogen, ammonia total [as	00610-1-1	Effluent Gross		.5337	lb/d			lb/d								N
KY0080845	Great Oaks WWTF	McCracken	001-1	07/31/2017	Nitrogen, ammonia total [as	00610-1-1	Effluent Gross				.5337	lb/d	lb/d								N
KY0080845	Great Oaks WWTF	McCracken	001-1	07/31/2017	Nitrogen, ammonia total [as	00610-1-1	Effluent Gross									3.2	mg/L			mg/L	N
KY0080845	Great Oaks WWTF	McCracken	001-1	07/31/2017	Nitrogen, ammonia total [as	00610-1-1	Effluent Gross											3.2	mg/L	mg/L	N
KY0080845	Great Oaks WWTF	McCracken	001-1	06/30/2017	Nitrogen, ammonia total [as	00610-1-1	Effluent Gross		.1939	lb/d			lb/d								N
KY0080845	Great Oaks WWTF	McCracken	001-1	06/30/2017	Nitrogen, ammonia total [as	00610-1-1	Effluent Gross				.1939	lb/d	lb/d								N
KY0080845	Great Oaks WWTF	McCracken	001-1	06/30/2017	Nitrogen, ammonia total [as	00610-1-1	Effluent Gross									.93	mg/L			mg/L	N
KY0080845	Great Oaks WWTF	McCracken	001-1	06/30/2017	Nitrogen, ammonia total [as	00610-1-1	Effluent Gross											.93	mg/L	mg/L	N

KY0080845	Great Oaks WWTF	McCracken	001-1	05/31/2017	Nitrogen, ammonia total [as	00610-1-1	Effluent Gross		.0625	lb/d			lb/d								N
KY0080845	Great Oaks WWTF	McCracken	001-1	05/31/2017	Nitrogen, ammonia total [as	00610-1-1	Effluent Gross				.0625	lb/d	lb/d								N
KY0080845	Great Oaks WWTF	McCracken	001-1	05/31/2017	Nitrogen, ammonia total [as	00610-1-1	Effluent Gross									.25	mg/L			mg/L	N
KY0080845	Great Oaks WWTF	McCracken	001-1	05/31/2017	Nitrogen, ammonia total [as	00610-1-1	Effluent Gross											.25	mg/L	mg/L	N
KY0080845	Great Oaks WWTF	McCracken	001-1	10/31/2016	Nitrogen, ammonia total [as	00610-1-1	Effluent Gross		.0729	lb/d			lb/d								N
KY0080845	Great Oaks WWTF	McCracken	001-1	10/31/2016	Nitrogen, ammonia total [as	00610-1-1	Effluent Gross				.0729	lb/d	lb/d								N
KY0080845	Great Oaks WWTF	McCracken	001-1	10/31/2016	Nitrogen, ammonia total [as	00610-1-1	Effluent Gross									.25	mg/L			mg/L	N
KY0080845	Great Oaks WWTF	McCracken	001-1	10/31/2016	Nitrogen, ammonia total [as	00610-1-1	Effluent Gross											.25	mg/L	mg/L	N
KY0080845	Great Oaks WWTF	McCracken	001-1	09/30/2016	Nitrogen, ammonia total [as	00610-1-1	Effluent Gross		.0729	lb/d			lb/d								N
KY0080845	Great Oaks WWTF	McCracken	001-1	09/30/2016	Nitrogen, ammonia total [as	00610-1-1	Effluent Gross				.0729	lb/d	lb/d								N
KY0080845	Great Oaks WWTF	McCracken	001-1	09/30/2016	Nitrogen, ammonia total [as	00610-1-1	Effluent Gross									.25	mg/L			mg/L	N
KY0080845	Great Oaks WWTF	McCracken	001-1	09/30/2016	Nitrogen, ammonia total [as	00610-1-1	Effluent Gross											.25	mg/L	mg/L	N
KY0080845	Great Oaks WWTF	McCracken	001-1	08/31/2016	Nitrogen, ammonia total [as	00610-1-1	Effluent Gross		.0521	lb/d			lb/d								N
KY0080845	Great Oaks WWTF	McCracken	001-1	08/31/2016	Nitrogen, ammonia total [as	00610-1-1	Effluent Gross				.0521	lb/d	lb/d								N
KY0080845	Great Oaks WWTF	McCracken	001-1	08/31/2016	Nitrogen, ammonia total [as	00610-1-1	Effluent Gross									.25	mg/L			mg/L	N
KY0080845	Great Oaks WWTF	McCracken	001-1	08/31/2016	Nitrogen, ammonia total [as	00610-1-1	Effluent Gross											.25	mg/L	mg/L	N
KY0080845	Great Oaks WWTF	McCracken	001-1	07/31/2016	Nitrogen, ammonia total [as	00610-1-1	Effluent Gross		1.1	lb/d			lb/d								N
KY0080845	Great Oaks WWTF	McCracken	001-1	07/31/2016	Nitrogen, ammonia total [as	00610-1-1	Effluent Gross				1.1	lb/d	lb/d								N
KY0080845	Great Oaks WWTF	McCracken	001-1	07/31/2016	Nitrogen, ammonia total [as	00610-1-1	Effluent Gross									2.4	mg/L			mg/L	N
KY0080845	Great Oaks WWTF	McCracken	001-1	07/31/2016	Nitrogen, ammonia total [as	00610-1-1	Effluent Gross											2.4	mg/L	mg/L	N
KY0080845	Great Oaks WWTF	McCracken	001-1	06/30/2016	Nitrogen, ammonia total [as	00610-1-1	Effluent Gross		.0729	lb/d			lb/d								N
KY0080845	Great Oaks WWTF	McCracken	001-1	06/30/2016	Nitrogen, ammonia total [as	00610-1-1	Effluent Gross				.0729	lb/d	lb/d								N
KY0080845	Great Oaks WWTF	McCracken	001-1	06/30/2016	Nitrogen, ammonia total [as	00610-1-1	Effluent Gross									.25	mg/L			mg/L	N
KY0080845	Great Oaks WWTF	McCracken	001-1	06/30/2016	Nitrogen, ammonia total [as	00610-1-1	Effluent Gross											.25	mg/L	mg/L	N
KY0080845	Great Oaks WWTF	McCracken	001-1	05/31/2016	Nitrogen, ammonia total [as	00610-1-1	Effluent Gross		.0834	lb/d			lb/d								N
KY0080845	Great Oaks WWTF	McCracken	001-1	05/31/2016	Nitrogen, ammonia total [as	00610-1-1	Effluent Gross				.0834	lb/d	lb/d								N
KY0080845	Great Oaks WWTF	McCracken	001-1	05/31/2016	Nitrogen, ammonia total [as	00610-1-1	Effluent Gross									.25	mg/L			mg/L	N
KY0080845	Great Oaks WWTF	McCracken	001-1	05/31/2016	Nitrogen, ammonia total [as	00610-1-1	Effluent Gross											.25	mg/L	mg/L	N
KY0080845	Great Oaks WWTF	McCracken	001-1	10/31/2015	Nitrogen, ammonia total [as	00610-1-1	Effluent Gross		.0875	lb/d			lb/d								N
KY0080845	Great Oaks WWTF	McCracken	001-1	10/31/2015	Nitrogen, ammonia total [as	00610-1-1	Effluent Gross				.0875	lb/d	lb/d								N
KY0080845	Great Oaks WWTF	McCracken	001-1	10/31/2015	Nitrogen, ammonia total [as	00610-1-1	Effluent Gross									.25	mg/L			mg/L	N
KY0080845	Great Oaks WWTF	McCracken	001-1	10/31/2015	Nitrogen, ammonia total [as	00610-1-1	Effluent Gross											.25	mg/L	mg/L	N
KY0080845	Great Oaks WWTF	McCracken	001-1	09/30/2015	Nitrogen, ammonia total [as	00610-1-1	Effluent Gross		.10842	lb/d			lb/d								N
KY0080845	Great Oaks WWTF	McCracken	001-1	09/30/2015	Nitrogen, ammonia total [as	00610-1-1	Effluent Gross				.10842	lb/d	lb/d								N
KY0080845	Great Oaks WWTF	McCracken	001-1	09/30/2015	Nitrogen, ammonia total [as	00610-1-1	Effluent Gross									.25	mg/L			mg/L	N
KY0080845	Great Oaks WWTF	McCracken	001-1	09/30/2015	Nitrogen, ammonia total [as	00610-1-1	Effluent Gross											.25	mg/L	mg/L	N
KY0080845	Great Oaks WWTF	McCracken	001-1	08/31/2015	Nitrogen, ammonia total [as	00610-1-1	Effluent Gross		.072	lb/d			lb/d								N
KY0080845	Great Oaks WWTF	McCracken	001-1	08/31/2015	Nitrogen, ammonia total [as	00610-1-1	Effluent Gross				.072	lb/d	lb/d								N
KY0080845	Great Oaks WWTF	McCracken	001-1	08/31/2015	Nitrogen, ammonia total [as	00610-1-1	Effluent Gross									.027	mg/L			mg/L	N
KY0080845	Great Oaks WWTF	McCracken	001-1	08/31/2015	Nitrogen, ammonia total [as	00610-1-1	Effluent Gross											.027	mg/L	mg/L	N
KY0080845	Great Oaks WWTF	McCracken	001-1	07/31/2015	Nitrogen, ammonia total [as	00610-1-1	Effluent Gross		1.926	lb/d			lb/d								N
KY0080845	Great Oaks WWTF	McCracken	001-1	07/31/2015	Nitrogen, ammonia total [as	00610-1-1	Effluent Gross				1.926	lb/d	lb/d								N
KY0080845	Great Oaks WWTF	McCracken	001-1	07/31/2015	Nitrogen, ammonia total [as	00610-1-1	Effluent Gross	93								7.7	mg/L			mg/L	Y
KY0080845	Great Oaks WWTF	McCracken	001-1	07/31/2015	Nitrogen, ammonia total [as	00610-1-1	Effluent Gross	28										7.7	mg/L	mg/L	Y
KY0080845	Great Oaks WWTF	McCracken	001-1	06/30/2015	Nitrogen, ammonia total [as	00610-1-1	Effluent Gross		.0729	lb/d			lb/d								N
KY0080845	Great Oaks WWTF	McCracken	001-1	06/30/2015	Nitrogen, ammonia total [as	00610-1-1	Effluent Gross				.0729	lb/d	lb/d								N
KY0080845	Great Oaks WWTF	McCracken	001-1	06/30/2015	Nitrogen, ammonia total [as	00610-1-1	Effluent Gross									.25	mg/L			mg/L	N
KY0080845	Great Oaks WWTF	McCracken	001-1	06/30/2015	Nitrogen, ammonia total [as	00610-1-1	Effluent Gross											.25	mg/L	mg/L	N
KY0080845	Great Oaks WWTF	McCracken	001-1	05/31/2015	Nitrogen, ammonia total [as	00610-1-1	Effluent Gross		.2101	lb/d			lb/d								N
KY0080845	Great Oaks WWTF	McCracken	001-1	05/31/2015	Nitrogen, ammonia total [as	00610-1-1	Effluent Gross				.2101	lb/d	lb/d								N
KY0080845	Great Oaks WWTF	McCracken	001-1	05/31/2015	Nitrogen, ammonia total [as	00610-1-1	Effluent Gross									1.4	mg/L			mg/L	N
KY0080845	Great Oaks WWTF	McCracken	001-1	05/31/2015	Nitrogen, ammonia total [as	00610-1-1	Effluent Gross											1.4	mg/L	mg/L	N
KY0080845	Great Oaks WWTF	McCracken	001-1	10/31/2014	Nitrogen, ammonia total [as	00610-1-1	Effluent Gross		.0667	lb/d			lb/d								N
KY0080845	Great Oaks WWTF	McCracken	001-1	10/31/2014	Nitrogen, ammonia total [as	00610-1-1	Effluent Gross				.0667	lb/d	lb/d								N
KY0080845	Great Oaks WWTF	McCracken	001-1	10/31/2014	Nitrogen, ammonia total [as	00610-1-1	Effluent Gross									.25	mg/L			mg/L	N
KY0080845	Great Oaks WWTF	McCracken	001-1	10/31/2014	Nitrogen, ammonia total [as	00610-1-1	Effluent Gross											.25	mg/L	mg/L	N
KY0080845	Great Oaks WWTF	McCracken	001-1	04/30/2019	Nitrogen, ammonia total [as	00610-1-2	Effluent Gross						lb/d								N
KY0080845	Great Oaks WWTF	McCracken	001-1	04/30/2019	Nitrogen, ammonia total [as	00610-1-2	Effluent Gross													mg/L	N
KY0080845	Great Oaks WWTF	McCracken	001-1	03/31/2019	Nitrogen, ammonia total [as	00610-1-2	Effluent Gross		2.218	lb/d			lb/d								N
KY0080845	Great Oaks WWTF	McCracken	001-1	03/31/2019	Nitrogen, ammonia total [as	00610-1-2	Effluent Gross				2.218	lb/d	lb/d								N
KY0080845	Great Oaks WWTF	McCracken	001-1	03/31/2019	Nitrogen, ammonia total [as	00610-1-2	Effluent Gross									7.6	mg/L			mg/L	N
KY0080845	Great Oaks WWTF	McCracken	001-1	03/31/2019	Nitrogen, ammonia total [as	00610-1-2	Effluent Gross											7.6	mg/L	mg/L	N
KY0080845	Great Oaks WWTF	McCracken	001-1	02/28/2019	Nitrogen, ammonia total [as	00610-1-2	Effluent Gross		.0729	lb/d			lb/d								N
KY0080845	Great Oaks WWTF	McCracken	001-1	02/28/2019	Nitrogen, ammonia total [as	00610-1-2	Effluent Gross				.0729	lb/d	lb/d								N
KY0080845	Great Oaks WWTF	McCracken	001-1	02/28/2019	Nitrogen, ammonia total [as	00610-1-2	Effluent Gross									.25	mg/L			mg/L	N
KY0080845	Great Oaks WWTF	McCracken	001-1	02/28/2019	Nitrogen, ammonia total [as	00610-1-2	Effluent Gross											.25	mg/L	mg/L	N
KY0080845	Great Oaks WWTF	McCracken	001-1	01/31/2019	Nitrogen, ammonia total [as	00610-1-2	Effluent Gross		3.502	lb/d			lb/d								N
KY0080845	Great Oaks WWTF	McCracken	001-1	01/31/2019	Nitrogen, ammonia total [as	00610-1-2	Effluent Gross				3.502	lb/d	lb/d								N
KY0080845	Great Oaks WWTF	McCracken	001-1	01/31/2019	Nitrogen, ammonia total [as	00610-1-2	Effluent Gross	40								14	mg/L			mg/L	Y
KY0080845	Great Oaks WWTF	McCracken	001-1	01/31/2019	Nitrogen, ammonia total [as	00610-1-2	Effluent Gross											14	mg/L	mg/L	N
KY0080845	Great Oaks WWTF	McCracken	001-1	12/31/2018	Nitrogen, ammonia total [as	00610-1-2	Effluent Gross		5.254	lb/d			lb/d								N
KY0080845	Great Oaks WWTF	McCracken	001-1	12/31/2018	Nitrogen, ammonia total [as	00610-1-2	Effluent Gross				5.254	lb/d	lb/d								N
KY0080845	Great Oaks WWTF	McCracken	001-1	12/31/2018	Nitrogen, ammonia total [as	00610-1-2	Effluent Gross	80								18	mg/L			mg/L	Y
KY0080845	Great Oaks WWTF	McCracken	001-1	12/31/2018	Nitrogen, ammonia total [as	00610-1-2	Effluent Gross	20										18	mg/L	mg/L	Y
KY0080845	Great Oaks WWTF	McCracken	001-1	11/30/2018	Nitrogen, ammonia total [as	00610-1-2	Effluent Gross		1.611	lb/d			lb/d								N
KY0080845	Great Oaks WWTF	McCracken	001-1	11/30/2018	Nitrogen, ammonia total [as	00610-1-2	Effluent Gross				1.611	lb/d	lb/d								N
KY0080845	Great Oaks WWTF	McCracken	001-1	11/30/2018	Nitrogen, ammonia total [as	00610-1-2	Effluent Gross									6.9	mg/L			mg/L	N
KY0080845	Great Oaks WWTF	McCracken	001-1	11/30/2018	Nitrogen, ammonia total [as	00610-1-2	Effluent Gross											6.9	mg/L	mg/L	N
KY0080845	Great Oaks WWTF	McCracken	001-1	04/30/2018	Nitrogen, ammonia total [as	00610-1-2	Effluent Gross						lb/d								N
KY0080845	Great Oaks WWTF	McCracken	001-1	04/30/2018	Nitrogen, ammonia total [as	00610-1-2	Effluent Gross													mg/L	N
KY0080845	Great Oaks WWTF	McCracken	001-1	03/31/2018	Nitrogen, ammonia total [as	00610-1-2	Effluent Gross		4.753	lb/d			lb/d								N
KY0080845	Great Oaks WWTF	McCracken	001-1	03/31/2018	Nitrogen, ammonia total [as	00610-1-2	Effluent Gross				4.753	lb/d	lb/d								N
KY0080845	Great Oaks WWTF	McCracken	001-1	03/31/2018	Nitrogen, ammonia total [as	00610-1-2	Effluent Gross	90								19	mg/L			mg/L	Y
KY0080845	Great Oaks WWTF	McCracken	001-1	03/31/2018	Nitrogen, ammonia total [as	00610-1-2	Effluent Gross	27										19	mg/L	mg/L	Y
KY0080845	Great Oaks WWTF	McCracken	001-1	02/28/2018	Nitrogen, ammonia total [as	00610-1-2	Effluent Gross		.1063	lb/d			lb/d								N
KY0080845	Great Oaks WWTF	McCracken	001-1	02/28/2018	Nitrogen, ammonia total [as	00610-1-2	Effluent Gross				.1063	lb/d	lb/d								N
KY0080845	Great Oaks WWTF	McCracken	001-1	02/28/2018	Nitrogen, ammonia total [as	00610-1-2	Effluent Gross									.25	mg/L			mg/L	N
KY0080845	Great Oaks WWTF	McCracken	001-1	02/28/2018	Nitrogen, ammonia total [as	00610-1-2	Effluent Gross											.25	mg/L	mg/L	N
KY0080845	Great Oaks WWTF	McCracken	001-1	01/31/2018	Nitrogen, ammonia total [as	00610-1-2	Effluent Gross		.0688	lb/d			lb/d								N
KY0080845	Great Oaks WWTF	McCracken	001-1	01/31/2018	Nitrogen, ammonia total [as	00610-1-2	Effluent Gross				.0688	lb/d	lb/d								N
KY0080845	Great Oaks WWTF	McCracken	001-1	01/31/2018	Nitrogen, ammonia total [as	00610-1-2	Effluent Gross									.25	mg/L			mg/L	N
KY0080845	Great Oaks WWTF	McCracken	001-1	01/31/2018	Nitrogen, ammonia total [as	00610-1-2	Effluent Gross											.25	mg/L	mg/L	N
KY0080845	Great Oaks WWTF	McCracken	001-1	12/31/2017	Nitrogen, ammonia total [as	00610-1-2	Effluent Gross		.3753	lb/d			lb/d								N
KY0080845	Great Oaks WWTF	McCracken	001-1	12/31/2017	Nitrogen, ammonia total [as	00610-1-2	Effluent Gross				.3753	lb/d	lb/d								N
KY0080845	Great Oaks WWTF	McCracken	001-1	12/31/2017	Nitrogen, ammonia total [as	00610-1-2	Effluent Gross									1.5	mg/L			mg/L	N
KY0080845	Great Oaks WWTF	McCracken	001-1	12/31/2017	Nitrogen, ammonia total [as	00610-1-2	Effluent Gross											1.5	mg/L	mg/L	N
KY0080845	Great Oaks WWTF	McCracken	001-1	11/30/2017	Nitrogen, ammonia total [as	00610-1-2	Effluent Gross		5.506	lb/d			lb/d								N
KY0080845	Great Oaks WWTF	McCracken	001-1	11/30/2017	Nitrogen, ammonia total [as	00610-1-2	Effluent Gross				5.506	lb/d	lb/d								N
KY0080845	Great Oaks WWTF	McCracken	001-1	11/30/2017	Nitrogen, ammonia total [as	00610-1-2	Effluent Gross	100								20	mg/L			mg/L	Y
KY0080845	Great Oaks WWTF	McCracken	001-1	11/30/2017	Nitrogen, ammonia total [as	00610-1-2	Effluent Gross	33										20	mg/L	mg/L	Y
KY0080845	Great Oaks WWTF	McCracken	001-1	04/30/2017	Nitrogen, ammonia total [as	00610-1-2	Effluent Gross		.0771	lb/d			lb/d								N
KY0080845	Great Oaks WWTF	McCracken	001-1	04/30/2017	Nitrogen, ammonia total [as	00610-1-2	Effluent Gross				.0771	lb/d	lb/d								N
KY0080845	Great Oaks WWTF	McCracken	001-1	04/30/2017	Nitrogen, ammonia total [as	00610-1-2	Effluent Gross									.25	mg/L			mg/L	N
KY0080845	Great Oaks WWTF	McCracken	001-1	04/30/2017	Nitrogen, ammonia total [as	00610-1-2	Effluent Gross											.25	mg/L	mg/L	N
KY0080845	Great Oaks WWTF	McCracken	001-1	03/31/2017	Nitrogen, ammonia total [as	00610-1-2	Effluent Gross		.0938	lb/d			lb/d								N
KY0080845	Great Oaks WWTF	McCracken	001-1	03/31/2017	Nitrogen, ammonia total [as	00610-1-2	Effluent Gross				.0938	lb/d	lb/d								N
KY0080845	Great Oaks WWTF	McCracken	001-1	03/31/2017	Nitrogen, ammonia total [as	00610-1-2	Effluent Gross									.25	mg/L			mg/L	N
KY0080845	Great Oaks WWTF	McCracken	001-1	03/31/2017	Nitrogen, ammonia total [as	00610-1-2	Effluent Gross											.25	mg/L	mg/L	N
KY0080845	Great Oaks WWTF	McCracken	001-1	02/28/2017	Nitrogen, ammonia total [as	00610-1-2	Effluent Gross		.0625	lb/d			lb/d								N
KY0080845	Great Oaks WWTF	McCracken	001-1	02/28/2017	Nitrogen, ammonia total [as	00610-1-2	Effluent Gross				.0625	lb/d	lb/d								N
KY0080845	Great Oaks WWTF	McCracken	001-1	02/28/2017	Nitrogen, ammonia total [as	00610-1-2	Effluent Gross									.25	mg/L			mg/L	N
KY0080845	Great Oaks WWTF	McCracken	001-1	02/28/2017	Nitrogen, ammonia total [as	00610-1-2	Effluent Gross											.25	mg/L	mg/L	N
KY0080845	Great Oaks WWTF	McCracken	001-1	01/31/2017	Nitrogen, ammonia total [as	00610-1-2	Effluent Gross		.0729	lb/d			lb/d								N
KY0080845	Great Oaks WWTF	McCracken	001-1	01/31/2017	Nitrogen, ammonia total [as	00610-1-2	Effluent Gross				.0729	lb/d	lb/d								N

KY0080845	Great Oaks WWTF	McCracken	001-1	01/31/2017	Nitrogen, ammonia total [as	00610-1-2	Effluent Gross									.25	mg/L			mg/L	N
KY0080845	Great Oaks WWTF	McCracken	001-1	01/31/2017	Nitrogen, ammonia total [as	00610-1-2	Effluent Gross											.25	mg/L	mg/L	N
KY0080845	Great Oaks WWTF	McCracken	001-1	12/31/2016	Nitrogen, ammonia total [as	00610-1-2	Effluent Gross		.0562	lb/d			lb/d								N
KY0080845	Great Oaks WWTF	McCracken	001-1	12/31/2016	Nitrogen, ammonia total [as	00610-1-2	Effluent Gross				.0562	lb/d	lb/d								N
KY0080845	Great Oaks WWTF	McCracken	001-1	12/31/2016	Nitrogen, ammonia total [as	00610-1-2	Effluent Gross									.25	mg/L			mg/L	N
KY0080845	Great Oaks WWTF	McCracken	001-1	12/31/2016	Nitrogen, ammonia total [as	00610-1-2	Effluent Gross											.25	mg/L	mg/L	N
KY0080845	Great Oaks WWTF	McCracken	001-1	11/30/2016	Nitrogen, ammonia total [as	00610-1-2	Effluent Gross		.1042	lb/d			lb/d								N
KY0080845	Great Oaks WWTF	McCracken	001-1	11/30/2016	Nitrogen, ammonia total [as	00610-1-2	Effluent Gross				.1042	lb/d	lb/d								N
KY0080845	Great Oaks WWTF	McCracken	001-1	11/30/2016	Nitrogen, ammonia total [as	00610-1-2	Effluent Gross									.25	mg/L			mg/L	N
KY0080845	Great Oaks WWTF	McCracken	001-1	11/30/2016	Nitrogen, ammonia total [as	00610-1-2	Effluent Gross											.25	mg/L	mg/L	N
KY0080845	Great Oaks WWTF	McCracken	001-1	04/30/2016	Nitrogen, ammonia total [as	00610-1-2	Effluent Gross		.1042	lb/d			lb/d								N
KY0080845	Great Oaks WWTF	McCracken	001-1	04/30/2016	Nitrogen, ammonia total [as	00610-1-2	Effluent Gross				.1042	lb/d	lb/d								N
KY0080845	Great Oaks WWTF	McCracken	001-1	04/30/2016	Nitrogen, ammonia total [as	00610-1-2	Effluent Gross									.25	mg/L			mg/L	N
KY0080845	Great Oaks WWTF	McCracken	001-1	04/30/2016	Nitrogen, ammonia total [as	00610-1-2	Effluent Gross											.25	mg/L	mg/L	N
KY0080845	Great Oaks WWTF	McCracken	001-1	03/31/2016	Nitrogen, ammonia total [as	00610-1-2	Effluent Gross		.1042	lb/d			lb/d								N
KY0080845	Great Oaks WWTF	McCracken	001-1	03/31/2016	Nitrogen, ammonia total [as	00610-1-2	Effluent Gross				.1042	lb/d	lb/d								N
KY0080845	Great Oaks WWTF	McCracken	001-1	03/31/2016	Nitrogen, ammonia total [as	00610-1-2	Effluent Gross									.25	mg/L			mg/L	N
KY0080845	Great Oaks WWTF	McCracken	001-1	03/31/2016	Nitrogen, ammonia total [as	00610-1-2	Effluent Gross											.25	mg/L	mg/L	N
KY0080845	Great Oaks WWTF	McCracken	001-1	02/29/2016	Nitrogen, ammonia total [as	00610-1-2	Effluent Gross		.7672	lb/d			lb/d								N
KY0080845	Great Oaks WWTF	McCracken	001-1	02/29/2016	Nitrogen, ammonia total [as	00610-1-2	Effluent Gross				.7672	lb/d	lb/d								N
KY0080845	Great Oaks WWTF	McCracken	001-1	02/29/2016	Nitrogen, ammonia total [as	00610-1-2	Effluent Gross									2.3	mg/L			mg/L	N
KY0080845	Great Oaks WWTF	McCracken	001-1	02/29/2016	Nitrogen, ammonia total [as	00610-1-2	Effluent Gross											2.3	mg/L	mg/L	N
KY0080845	Great Oaks WWTF	McCracken	001-1	01/31/2016	Nitrogen, ammonia total [as	00610-1-2	Effluent Gross		.0521	lb/d			lb/d								N
KY0080845	Great Oaks WWTF	McCracken	001-1	01/31/2016	Nitrogen, ammonia total [as	00610-1-2	Effluent Gross				.0521	lb/d	lb/d								N
KY0080845	Great Oaks WWTF	McCracken	001-1	01/31/2016	Nitrogen, ammonia total [as	00610-1-2	Effluent Gross									.25	mg/L			mg/L	N
KY0080845	Great Oaks WWTF	McCracken	001-1	01/31/2016	Nitrogen, ammonia total [as	00610-1-2	Effluent Gross											.25	mg/L	mg/L	N
KY0080845	Great Oaks WWTF	McCracken	001-1	12/31/2015	Nitrogen, ammonia total [as	00610-1-2	Effluent Gross		.0834	lb/d			lb/d								N
KY0080845	Great Oaks WWTF	McCracken	001-1	12/31/2015	Nitrogen, ammonia total [as	00610-1-2	Effluent Gross				.0834	lb/d	lb/d								N
KY0080845	Great Oaks WWTF	McCracken	001-1	12/31/2015	Nitrogen, ammonia total [as	00610-1-2	Effluent Gross									.25	mg/L			mg/L	N
KY0080845	Great Oaks WWTF	McCracken	001-1	12/31/2015	Nitrogen, ammonia total [as	00610-1-2	Effluent Gross											.25	mg/L	mg/L	N
KY0080845	Great Oaks WWTF	McCracken	001-1	11/30/2015	Nitrogen, ammonia total [as	00610-1-2	Effluent Gross		.0688	lb/d			lb/d								N
KY0080845	Great Oaks WWTF	McCracken	001-1	11/30/2015	Nitrogen, ammonia total [as	00610-1-2	Effluent Gross				.0688	lb/d	lb/d								N
KY0080845	Great Oaks WWTF	McCracken	001-1	11/30/2015	Nitrogen, ammonia total [as	00610-1-2	Effluent Gross									.25	mg/L			mg/L	N
KY0080845	Great Oaks WWTF	McCracken	001-1	11/30/2015	Nitrogen, ammonia total [as	00610-1-2	Effluent Gross											.25	mg/L	mg/L	N
KY0080845	Great Oaks WWTF	McCracken	001-1	04/30/2015	Nitrogen, ammonia total [as	00610-1-2	Effluent Gross		.0834	lb/d			lb/d								N
KY0080845	Great Oaks WWTF	McCracken	001-1	04/30/2015	Nitrogen, ammonia total [as	00610-1-2	Effluent Gross				.0834	lb/d	lb/d								N
KY0080845	Great Oaks WWTF	McCracken	001-1	04/30/2015	Nitrogen, ammonia total [as	00610-1-2	Effluent Gross									.25	mg/L			mg/L	N
KY0080845	Great Oaks WWTF	McCracken	001-1	04/30/2015	Nitrogen, ammonia total [as	00610-1-2	Effluent Gross											.25	mg/L	mg/L	N
KY0080845	Great Oaks WWTF	McCracken	001-1	03/31/2015	Nitrogen, ammonia total [as	00610-1-2	Effluent Gross		.0875	lb/d			lb/d								N
KY0080845	Great Oaks WWTF	McCracken	001-1	03/31/2015	Nitrogen, ammonia total [as	00610-1-2	Effluent Gross				.0875	lb/d	lb/d								N
KY0080845	Great Oaks WWTF	McCracken	001-1	03/31/2015	Nitrogen, ammonia total [as	00610-1-2	Effluent Gross									.25	mg/L			mg/L	N
KY0080845	Great Oaks WWTF	McCracken	001-1	03/31/2015	Nitrogen, ammonia total [as	00610-1-2	Effluent Gross											.25	mg/L	mg/L	N
KY0080845	Great Oaks WWTF	McCracken	001-1	02/28/2015	Nitrogen, ammonia total [as	00610-1-2	Effluent Gross		.0729	lb/d			lb/d								N
KY0080845	Great Oaks WWTF	McCracken	001-1	02/28/2015	Nitrogen, ammonia total [as	00610-1-2	Effluent Gross				.0729	lb/d	lb/d								N
KY0080845	Great Oaks WWTF	McCracken	001-1	02/28/2015	Nitrogen, ammonia total [as	00610-1-2	Effluent Gross									.25	mg/L			mg/L	N
KY0080845	Great Oaks WWTF	McCracken	001-1	02/28/2015	Nitrogen, ammonia total [as	00610-1-2	Effluent Gross											.25	mg/L	mg/L	N
KY0080845	Great Oaks WWTF	McCracken	001-1	01/31/2015	Nitrogen, ammonia total [as	00610-1-2	Effluent Gross		.0854	lb/d			lb/d								N
KY0080845	Great Oaks WWTF	McCracken	001-1	01/31/2015	Nitrogen, ammonia total [as	00610-1-2	Effluent Gross				.0854	lb/d	lb/d								N
KY0080845	Great Oaks WWTF	McCracken	001-1	01/31/2015	Nitrogen, ammonia total [as	00610-1-2	Effluent Gross									.25	mg/L			mg/L	N
KY0080845	Great Oaks WWTF	McCracken	001-1	01/31/2015	Nitrogen, ammonia total [as	00610-1-2	Effluent Gross											.25	mg/L	mg/L	N
KY0080845	Great Oaks WWTF	McCracken	001-1	12/31/2014	Nitrogen, ammonia total [as	00610-1-2	Effluent Gross		.0875	lb/d			lb/d								N
KY0080845	Great Oaks WWTF	McCracken	001-1	12/31/2014	Nitrogen, ammonia total [as	00610-1-2	Effluent Gross				.0875	lb/d	lb/d								N
KY0080845	Great Oaks WWTF	McCracken	001-1	12/31/2014	Nitrogen, ammonia total [as	00610-1-2	Effluent Gross									.25	mg/L			mg/L	N
KY0080845	Great Oaks WWTF	McCracken	001-1	12/31/2014	Nitrogen, ammonia total [as	00610-1-2	Effluent Gross											.25	mg/L	mg/L	N
KY0080845	Great Oaks WWTF	McCracken	001-1	11/30/2014	Nitrogen, ammonia total [as	00610-1-2	Effluent Gross		.0729	lb/d			lb/d								N
KY0080845	Great Oaks WWTF	McCracken	001-1	11/30/2014	Nitrogen, ammonia total [as	00610-1-2	Effluent Gross				.0729	lb/d	lb/d								N
KY0080845	Great Oaks WWTF	McCracken	001-1	11/30/2014	Nitrogen, ammonia total [as	00610-1-2	Effluent Gross									.25	mg/L			mg/L	N
KY0080845	Great Oaks WWTF	McCracken	001-1	11/30/2014	Nitrogen, ammonia total [as	00610-1-2	Effluent Gross											.25	mg/L	mg/L	N

KY0080845	Great Oaks WWTF	McCracken	001-1	09/30/2019	Flow, in conduit or thru	50050-1-0	Effluent Gross		.027		.032		MGD								N
KY0080845	Great Oaks WWTF	McCracken	001-1	08/31/2019	Flow, in conduit or thru	50050-1-0	Effluent Gross		.0299		.0299		MGD								N
KY0080845	Great Oaks WWTF	McCracken	001-1	07/31/2019	Flow, in conduit or thru	50050-1-0	Effluent Gross						MGD								N
KY0080845	Great Oaks WWTF	McCracken	001-1	06/30/2019	Flow, in conduit or thru	50050-1-0	Effluent Gross						MGD								N
KY0080845	Great Oaks WWTF	McCracken	001-1	05/31/2019	Flow, in conduit or thru	50050-1-0	Effluent Gross						MGD								N
KY0080845	Great Oaks WWTF	McCracken	001-1	04/30/2019	Flow, in conduit or thru	50050-1-0	Effluent Gross						MGD								N
KY0080845	Great Oaks WWTF	McCracken	001-1	03/31/2019	Flow, in conduit or thru	50050-1-0	Effluent Gross		.035	MGD			MGD								N
KY0080845	Great Oaks WWTF	McCracken	001-1	03/31/2019	Flow, in conduit or thru	50050-1-0	Effluent Gross				.035	MGD	MGD								N
KY0080845	Great Oaks WWTF	McCracken	001-1	02/28/2019	Flow, in conduit or thru	50050-1-0	Effluent Gross		.035	MGD			MGD								N
KY0080845	Great Oaks WWTF	McCracken	001-1	02/28/2019	Flow, in conduit or thru	50050-1-0	Effluent Gross				.035	MGD	MGD								N
KY0080845	Great Oaks WWTF	McCracken	001-1	01/31/2019	Flow, in conduit or thru	50050-1-0	Effluent Gross		.03	MGD			MGD								N
KY0080845	Great Oaks WWTF	McCracken	001-1	01/31/2019	Flow, in conduit or thru	50050-1-0	Effluent Gross				.03	MGD	MGD								N
KY0080845	Great Oaks WWTF	McCracken	001-1	12/31/2018	Flow, in conduit or thru	50050-1-0	Effluent Gross		.035	MGD			MGD								N
KY0080845	Great Oaks WWTF	McCracken	001-1	12/31/2018	Flow, in conduit or thru	50050-1-0	Effluent Gross				.035	MGD	MGD								N
KY0080845	Great Oaks WWTF	McCracken	001-1	11/30/2018	Flow, in conduit or thru	50050-1-0	Effluent Gross		.028	MGD			MGD								N
KY0080845	Great Oaks WWTF	McCracken	001-1	11/30/2018	Flow, in conduit or thru	50050-1-0	Effluent Gross				.028	MGD	MGD								N
KY0080845	Great Oaks WWTF	McCracken	001-1	10/31/2018	Flow, in conduit or thru	50050-1-0	Effluent Gross		.0375	MGD			MGD								N
KY0080845	Great Oaks WWTF	McCracken	001-1	10/31/2018	Flow, in conduit or thru	50050-1-0	Effluent Gross				.0375	MGD	MGD								N
KY0080845	Great Oaks WWTF	McCracken	001-1	09/30/2018	Flow, in conduit or thru	50050-1-0	Effluent Gross		.065	MGD			MGD								N
KY0080845	Great Oaks WWTF	McCracken	001-1	09/30/2018	Flow, in conduit or thru	50050-1-0	Effluent Gross				.065	MGD	MGD								N
KY0080845	Great Oaks WWTF	McCracken	001-1	08/31/2018	Flow, in conduit or thru	50050-1-0	Effluent Gross		.028	MGD			MGD								N
KY0080845	Great Oaks WWTF	McCracken	001-1	08/31/2018	Flow, in conduit or thru	50050-1-0	Effluent Gross				.028	MGD	MGD								N
KY0080845	Great Oaks WWTF	McCracken	001-1	07/31/2018	Flow, in conduit or thru	50050-1-0	Effluent Gross		.025	MGD			MGD								N
KY0080845	Great Oaks WWTF	McCracken	001-1	07/31/2018	Flow, in conduit or thru	50050-1-0	Effluent Gross				.025	MGD	MGD								N
KY0080845	Great Oaks WWTF	McCracken	001-1	06/30/2018	Flow, in conduit or thru	50050-1-0	Effluent Gross		.025	MGD			MGD								N
KY0080845	Great Oaks WWTF	McCracken	001-1	06/30/2018	Flow, in conduit or thru	50050-1-0	Effluent Gross				.025	MGD	MGD								N
KY0080845	Great Oaks WWTF	McCracken	001-1	05/31/2018	Flow, in conduit or thru	50050-1-0	Effluent Gross		.03	MGD			MGD								N
KY0080845	Great Oaks WWTF	McCracken	001-1	05/31/2018	Flow, in conduit or thru	50050-1-0	Effluent Gross				.03	MGD	MGD								N
KY0080845	Great Oaks WWTF	McCracken	001-1	04/30/2018	Flow, in conduit or thru	50050-1-0	Effluent Gross						MGD								N
KY0080845	Great Oaks WWTF	McCracken	001-1	03/31/2018	Flow, in conduit or thru	50050-1-0	Effluent Gross		.03	MGD			MGD								N
KY0080845	Great Oaks WWTF	McCracken	001-1	03/31/2018	Flow, in conduit or thru	50050-1-0	Effluent Gross				.03	MGD	MGD								N
KY0080845	Great Oaks WWTF	McCracken	001-1	02/28/2018	Flow, in conduit or thru	50050-1-0	Effluent Gross		.051	MGD			MGD								N
KY0080845	Great Oaks WWTF	McCracken	001-1	02/28/2018	Flow, in conduit or thru	50050-1-0	Effluent Gross				.051	MGD	MGD								N
KY0080845	Great Oaks WWTF	McCracken	001-1	01/31/2018	Flow, in conduit or thru	50050-1-0	Effluent Gross		.033	MGD			MGD								N
KY0080845	Great Oaks WWTF	McCracken	001-1	01/31/2018	Flow, in conduit or thru	50050-1-0	Effluent Gross				.033	MGD	MGD								N
KY0080845	Great Oaks WWTF	McCracken	001-1	12/31/2017	Flow, in conduit or thru	50050-1-0	Effluent Gross		.03	MGD			MGD								N
KY0080845	Great Oaks WWTF	McCracken	001-1	12/31/2017	Flow, in conduit or thru	50050-1-0	Effluent Gross				.03	MGD	MGD								N
KY0080845	Great Oaks WWTF	McCracken	001-1	11/30/2017	Flow, in conduit or thru	50050-1-0	Effluent Gross		.033	MGD			MGD								N
KY0080845	Great Oaks WWTF	McCracken	001-1	11/30/2017	Flow, in conduit or thru	50050-1-0	Effluent Gross				.033	MGD	MGD								N
KY0080845	Great Oaks WWTF	McCracken	001-1	10/31/2017	Flow, in conduit or thru	50050-1-0	Effluent Gross		.025	MGD			MGD								N
KY0080845	Great Oaks WWTF	McCracken	001-1	10/31/2017	Flow, in conduit or thru	50050-1-0	Effluent Gross				.025	MGD	MGD								N
KY0080845	Great Oaks WWTF	McCracken	001-1	09/30/2017	Flow, in conduit or thru	50050-1-0	Effluent Gross		.03	MGD			MGD								N
KY0080845	Great Oaks WWTF	McCracken	001-1	09/30/2017	Flow, in conduit or thru	50050-1-0	Effluent Gross				.03	MGD	MGD								N
KY0080845	Great Oaks WWTF	McCracken	001-1	08/31/2017	Flow, in conduit or thru	50050-1-0	Effluent Gross		.037	MGD			MGD								N
KY0080845	Great Oaks WWTF	McCracken	001-1	08/31/2017	Flow, in conduit or thru	50050-1-0	Effluent Gross				.037	MGD	MGD								N
KY0080845	Great Oaks WWTF	McCracken	001-1	07/31/2017	Flow, in conduit or thru	50050-1-0	Effluent Gross		.02	MGD			MGD								N
KY0080845	Great Oaks WWTF	McCracken	001-1	07/31/2017	Flow, in conduit or thru	50050-1-0	Effluent Gross				.02	MGD	MGD								N
KY0080845	Great Oaks WWTF	McCracken	001-1	06/30/2017	Flow, in conduit or thru	50050-1-0	Effluent Gross		.025	MGD			MGD								N
KY0080845	Great Oaks WWTF	McCracken	001-1	06/30/2017	Flow, in conduit or thru	50050-1-0	Effluent Gross				.025	MGD	MGD								N
KY0080845	Great Oaks WWTF	McCracken	001-1	05/31/2017	Flow, in conduit or thru	50050-1-0	Effluent Gross		.03	MGD			MGD								N
KY0080845	Great Oaks WWTF	McCracken	001-1	05/31/2017	Flow, in conduit or thru	50050-1-0	Effluent Gross				.03	MGD	MGD								N
KY0080845	Great Oaks WWTF	McCracken	001-1	04/30/2017	Flow, in conduit or thru	50050-1-0	Effluent Gross		.037	MGD			MGD								N
KY0080845	Great Oaks WWTF	McCracken	001-1	04/30/2017	Flow, in conduit or thru	50050-1-0	Effluent Gross				.037	MGD	MGD								N
KY0080845	Great Oaks WWTF	McCracken	001-1	03/31/2017	Flow, in conduit or thru	50050-1-0	Effluent Gross		.045	MGD			MGD								N
KY0080845	Great Oaks WWTF	McCracken	001-1	03/31/2017	Flow, in conduit or thru	50050-1-0	Effluent Gross				.045	MGD	MGD								N
KY0080845	Great Oaks WWTF	McCracken	001-1	02/28/2017	Flow, in conduit or thru	50050-1-0	Effluent Gross		.03	MGD			MGD								N

KY0080845	Great Oaks WWTF	McCracken	001-1	02/28/2017	Flow, in conduit or thru	50050-1-0	Effluent Gross				.03	MGD	MGD								N
KY0080845	Great Oaks WWTF	McCracken	001-1	01/31/2017	Flow, in conduit or thru	50050-1-0	Effluent Gross		.035	MGD			MGD								N
KY0080845	Great Oaks WWTF	McCracken	001-1	01/31/2017	Flow, in conduit or thru	50050-1-0	Effluent Gross				.035	MGD	MGD								N
KY0080845	Great Oaks WWTF	McCracken	001-1	12/31/2016	Flow, in conduit or thru	50050-1-0	Effluent Gross		.027	MGD			MGD								N
KY0080845	Great Oaks WWTF	McCracken	001-1	12/31/2016	Flow, in conduit or thru	50050-1-0	Effluent Gross				.027	MGD	MGD								N
KY0080845	Great Oaks WWTF	McCracken	001-1	11/30/2016	Flow, in conduit or thru	50050-1-0	Effluent Gross		.05	MGD			MGD								N
KY0080845	Great Oaks WWTF	McCracken	001-1	11/30/2016	Flow, in conduit or thru	50050-1-0	Effluent Gross				.05	MGD	MGD								N
KY0080845	Great Oaks WWTF	McCracken	001-1	10/31/2016	Flow, in conduit or thru	50050-1-0	Effluent Gross		.035	MGD			MGD								N
KY0080845	Great Oaks WWTF	McCracken	001-1	10/31/2016	Flow, in conduit or thru	50050-1-0	Effluent Gross				.035	MGD	MGD								N
KY0080845	Great Oaks WWTF	McCracken	001-1	09/30/2016	Flow, in conduit or thru	50050-1-0	Effluent Gross		.035	MGD			MGD								N
KY0080845	Great Oaks WWTF	McCracken	001-1	09/30/2016	Flow, in conduit or thru	50050-1-0	Effluent Gross				.035	MGD	MGD								N
KY0080845	Great Oaks WWTF	McCracken	001-1	08/31/2016	Flow, in conduit or thru	50050-1-0	Effluent Gross		.025	MGD			MGD								N
KY0080845	Great Oaks WWTF	McCracken	001-1	08/31/2016	Flow, in conduit or thru	50050-1-0	Effluent Gross				.025	MGD	MGD								N
KY0080845	Great Oaks WWTF	McCracken	001-1	07/31/2016	Flow, in conduit or thru	50050-1-0	Effluent Gross		.055	MGD			MGD								N
KY0080845	Great Oaks WWTF	McCracken	001-1	07/31/2016	Flow, in conduit or thru	50050-1-0	Effluent Gross				.055	MGD	MGD								N
KY0080845	Great Oaks WWTF	McCracken	001-1	06/30/2016	Flow, in conduit or thru	50050-1-0	Effluent Gross		.035	MGD			MGD								N
KY0080845	Great Oaks WWTF	McCracken	001-1	06/30/2016	Flow, in conduit or thru	50050-1-0	Effluent Gross				.035	MGD	MGD								N
KY0080845	Great Oaks WWTF	McCracken	001-1	05/31/2016	Flow, in conduit or thru	50050-1-0	Effluent Gross		.04	MGD			MGD								N
KY0080845	Great Oaks WWTF	McCracken	001-1	05/31/2016	Flow, in conduit or thru	50050-1-0	Effluent Gross				.04	MGD	MGD								N
KY0080845	Great Oaks WWTF	McCracken	001-1	04/30/2016	Flow, in conduit or thru	50050-1-0	Effluent Gross		.05	MGD			MGD								N
KY0080845	Great Oaks WWTF	McCracken	001-1	04/30/2016	Flow, in conduit or thru	50050-1-0	Effluent Gross				.05	MGD	MGD								N
KY0080845	Great Oaks WWTF	McCracken	001-1	03/31/2016	Flow, in conduit or thru	50050-1-0	Effluent Gross		.05	MGD			MGD								N
KY0080845	Great Oaks WWTF	McCracken	001-1	03/31/2016	Flow, in conduit or thru	50050-1-0	Effluent Gross				.05	MGD	MGD								N
KY0080845	Great Oaks WWTF	McCracken	001-1	02/29/2016	Flow, in conduit or thru	50050-1-0	Effluent Gross		.04	MGD			MGD								N
KY0080845	Great Oaks WWTF	McCracken	001-1	02/29/2016	Flow, in conduit or thru	50050-1-0	Effluent Gross				.04	MGD	MGD								N
KY0080845	Great Oaks WWTF	McCracken	001-1	01/31/2016	Flow, in conduit or thru	50050-1-0	Effluent Gross		.025	MGD			MGD								N
KY0080845	Great Oaks WWTF	McCracken	001-1	01/31/2016	Flow, in conduit or thru	50050-1-0	Effluent Gross				.025	MGD	MGD								N
KY0080845	Great Oaks WWTF	McCracken	001-1	12/31/2015	Flow, in conduit or thru	50050-1-0	Effluent Gross		.04	MGD			MGD								N
KY0080845	Great Oaks WWTF	McCracken	001-1	12/31/2015	Flow, in conduit or thru	50050-1-0	Effluent Gross				.04	MGD	MGD								N
KY0080845	Great Oaks WWTF	McCracken	001-1	11/30/2015	Flow, in conduit or thru	50050-1-0	Effluent Gross		.033	MGD			MGD								N
KY0080845	Great Oaks WWTF	McCracken	001-1	11/30/2015	Flow, in conduit or thru	50050-1-0	Effluent Gross				.033	MGD	MGD								N
KY0080845	Great Oaks WWTF	McCracken	001-1	10/31/2015	Flow, in conduit or thru	50050-1-0	Effluent Gross		.042	MGD			MGD								N
KY0080845	Great Oaks WWTF	McCracken	001-1	10/31/2015	Flow, in conduit or thru	50050-1-0	Effluent Gross				.042	MGD	MGD								N
KY0080845	Great Oaks WWTF	McCracken	001-1	09/30/2015	Flow, in conduit or thru	50050-1-0	Effluent Gross		.052	MGD			MGD								N
KY0080845	Great Oaks WWTF	McCracken	001-1	09/30/2015	Flow, in conduit or thru	50050-1-0	Effluent Gross				.052	MGD	MGD								N
KY0080845	Great Oaks WWTF	McCracken	001-1	08/31/2015	Flow, in conduit or thru	50050-1-0	Effluent Gross		.032	MGD			MGD								N
KY0080845	Great Oaks WWTF	McCracken	001-1	08/31/2015	Flow, in conduit or thru	50050-1-0	Effluent Gross				.032	MGD	MGD								N
KY0080845	Great Oaks WWTF	McCracken	001-1	07/31/2015	Flow, in conduit or thru	50050-1-0	Effluent Gross		.03	MGD			MGD								N
KY0080845	Great Oaks WWTF	McCracken	001-1	07/31/2015	Flow, in conduit or thru	50050-1-0	Effluent Gross				.03	MGD	MGD								N
KY0080845	Great Oaks WWTF	McCracken	001-1	06/30/2015	Flow, in conduit or thru	50050-1-0	Effluent Gross		.035	MGD			MGD								N
KY0080845	Great Oaks WWTF	McCracken	001-1	06/30/2015	Flow, in conduit or thru	50050-1-0	Effluent Gross				.035	MGD	MGD								N
KY0080845	Great Oaks WWTF	McCracken	001-1	05/31/2015	Flow, in conduit or thru	50050-1-0	Effluent Gross		.018	MGD			MGD								N
KY0080845	Great Oaks WWTF	McCracken	001-1	05/31/2015	Flow, in conduit or thru	50050-1-0	Effluent Gross				.018	MGD	MGD								N
KY0080845	Great Oaks WWTF	McCracken	001-1	04/30/2015	Flow, in conduit or thru	50050-1-0	Effluent Gross		.04	MGD			MGD								N
KY0080845	Great Oaks WWTF	McCracken	001-1	04/30/2015	Flow, in conduit or thru	50050-1-0	Effluent Gross				.04	MGD	MGD								N
KY0080845	Great Oaks WWTF	McCracken	001-1	03/31/2015	Flow, in conduit or thru	50050-1-0	Effluent Gross		.042	MGD			MGD								N
KY0080845	Great Oaks WWTF	McCracken	001-1	03/31/2015	Flow, in conduit or thru	50050-1-0	Effluent Gross				.042	MGD	MGD								N
KY0080845	Great Oaks WWTF	McCracken	001-1	02/28/2015	Flow, in conduit or thru	50050-1-0	Effluent Gross		.035	MGD			MGD								N
KY0080845	Great Oaks WWTF	McCracken	001-1	02/28/2015	Flow, in conduit or thru	50050-1-0	Effluent Gross				.035	MGD	MGD								N
KY0080845	Great Oaks WWTF	McCracken	001-1	01/31/2015	Flow, in conduit or thru	50050-1-0	Effluent Gross		.041	MGD			MGD								N
KY0080845	Great Oaks WWTF	McCracken	001-1	01/31/2015	Flow, in conduit or thru	50050-1-0	Effluent Gross				.041	MGD	MGD								N
KY0080845	Great Oaks WWTF	McCracken	001-1	12/31/2014	Flow, in conduit or thru	50050-1-0	Effluent Gross		.042	MGD			MGD								N
KY0080845	Great Oaks WWTF	McCracken	001-1	12/31/2014	Flow, in conduit or thru	50050-1-0	Effluent Gross				.042	MGD	MGD								N
KY0080845	Great Oaks WWTF	McCracken	001-1	11/30/2014	Flow, in conduit or thru	50050-1-0	Effluent Gross		.035	MGD			MGD								N
KY0080845	Great Oaks WWTF	McCracken	001-1	11/30/2014	Flow, in conduit or thru	50050-1-0	Effluent Gross				.035	MGD	MGD								N
KY0080845	Great Oaks WWTF	McCracken	001-1	10/31/2014	Flow, in conduit or thru	50050-1-0	Effluent Gross		.032	MGD			MGD								N
KY0080845	Great Oaks WWTF	McCracken	001-1	10/31/2014	Flow, in conduit or thru	50050-1-0	Effluent Gross				.032	MGD	MGD								N
KY0080845	Great Oaks WWTF	McCracken	001-1	09/30/2019	Chlorine, total residual	50060-1-0	Effluent Gross									NODI B		NODI B		mg/L	N
KY0080845	Great Oaks WWTF	McCracken	001-1	08/31/2019	Chlorine, total residual	50060-1-0	Effluent Gross									NODI B		NODI B		mg/L	N
KY0080845	Great Oaks WWTF	McCracken	001-1	07/31/2019	Chlorine, total residual	50060-1-0	Effluent Gross													mg/L	N
KY0080845	Great Oaks WWTF	McCracken	001-1	06/30/2019	Chlorine, total residual	50060-1-0	Effluent Gross													mg/L	N
KY0080845	Great Oaks WWTF	McCracken	001-1	05/31/2019	Chlorine, total residual	50060-1-0	Effluent Gross													mg/L	N
KY0080845	Great Oaks WWTF	McCracken	001-1	04/30/2019	Chlorine, total residual	50060-1-0	Effluent Gross													mg/L	N
KY0080845	Great Oaks WWTF	McCracken	001-1	03/31/2019	Chlorine, total residual	50060-1-0	Effluent Gross	445								.06	mg/L			mg/L	Y
KY0080845	Great Oaks WWTF	McCracken	001-1	03/31/2019	Chlorine, total residual	50060-1-0	Effluent Gross	216										.06	mg/L	mg/L	Y
KY0080845	Great Oaks WWTF	McCracken	001-1	02/28/2019	Chlorine, total residual	50060-1-0	Effluent Gross									0	mg/L			mg/L	N
KY0080845	Great Oaks WWTF	McCracken	001-1	02/28/2019	Chlorine, total residual	50060-1-0	Effluent Gross											0	mg/L	mg/L	N
KY0080845	Great Oaks WWTF	McCracken	001-1	01/31/2019	Chlorine, total residual	50060-1-0	Effluent Gross	264								.04	mg/L			mg/L	Y
KY0080845	Great Oaks WWTF	McCracken	001-1	01/31/2019	Chlorine, total residual	50060-1-0	Effluent Gross	111										.04	mg/L	mg/L	Y
KY0080845	Great Oaks WWTF	McCracken	001-1	12/31/2018	Chlorine, total residual	50060-1-0	Effluent Gross									0	mg/L			mg/L	N
KY0080845	Great Oaks WWTF	McCracken	001-1	12/31/2018	Chlorine, total residual	50060-1-0	Effluent Gross											0	mg/L	mg/L	N
KY0080845	Great Oaks WWTF	McCracken	001-1	11/30/2018	Chlorine, total residual	50060-1-0	Effluent Gross									0	mg/L			mg/L	N
KY0080845	Great Oaks WWTF	McCracken	001-1	11/30/2018	Chlorine, total residual	50060-1-0	Effluent Gross											0	mg/L	mg/L	N
KY0080845	Great Oaks WWTF	McCracken	001-1	10/31/2018	Chlorine, total residual	50060-1-0	Effluent Gross	173								.03	mg/L			mg/L	Y
KY0080845	Great Oaks WWTF	McCracken	001-1	10/31/2018	Chlorine, total residual	50060-1-0	Effluent Gross	58										.03	mg/L	mg/L	Y
KY0080845	Great Oaks WWTF	McCracken	001-1	09/30/2018	Chlorine, total residual	50060-1-0	Effluent Gross	18082								2	mg/L			mg/L	Y
KY0080845	Great Oaks WWTF	McCracken	001-1	09/30/2018	Chlorine, total residual	50060-1-0	Effluent Gross	10426										2	mg/L	mg/L	Y
KY0080845	Great Oaks WWTF	McCracken	001-1	08/31/2018	Chlorine, total residual	50060-1-0	Effluent Gross									0	mg/L			mg/L	N
KY0080845	Great Oaks WWTF	McCracken	001-1	08/31/2018	Chlorine, total residual	50060-1-0	Effluent Gross											0	mg/L	mg/L	N
KY0080845	Great Oaks WWTF	McCracken	001-1	07/31/2018	Chlorine, total residual	50060-1-0	Effluent Gross	718								.09	mg/L			mg/L	Y
KY0080845	Great Oaks WWTF	McCracken	001-1	07/31/2018	Chlorine, total residual	50060-1-0	Effluent Gross	374										.09	mg/L	mg/L	Y
KY0080845	Great Oaks WWTF	McCracken	001-1	06/30/2018	Chlorine, total residual	50060-1-0	Effluent Gross									.01	mg/L			mg/L	N
KY0080845	Great Oaks WWTF	McCracken	001-1	06/30/2018	Chlorine, total residual	50060-1-0	Effluent Gross											.01	mg/L	mg/L	N
KY0080845	Great Oaks WWTF	McCracken	001-1	05/31/2018	Chlorine, total residual	50060-1-0	Effluent Gross	82								.02	mg/L			mg/L	Y
KY0080845	Great Oaks WWTF	McCracken	001-1	05/31/2018	Chlorine, total residual	50060-1-0	Effluent Gross	5										.02	mg/L	mg/L	Y
KY0080845	Great Oaks WWTF	McCracken	001-1	04/30/2018	Chlorine, total residual	50060-1-0	Effluent Gross													mg/L	N
KY0080845	Great Oaks WWTF	McCracken	001-1	03/31/2018	Chlorine, total residual	50060-1-0	Effluent Gross	82								.02	mg/L			mg/L	Y
KY0080845	Great Oaks WWTF	McCracken	001-1	03/31/2018	Chlorine, total residual	50060-1-0	Effluent Gross	5										.02	mg/L	mg/L	Y
KY0080845	Great Oaks WWTF	McCracken	001-1	02/28/2018	Chlorine, total residual	50060-1-0	Effluent Gross	82								.02	mg/L			mg/L	Y
KY0080845	Great Oaks WWTF	McCracken	001-1	02/28/2018	Chlorine, total residual	50060-1-0	Effluent Gross	5										.02	mg/L	mg/L	Y
KY0080845	Great Oaks WWTF	McCracken	001-1	01/31/2018	Chlorine, total residual	50060-1-0	Effluent Gross	7627								.85	mg/L			mg/L	Y
KY0080845	Great Oaks WWTF	McCracken	001-1	01/31/2018	Chlorine, total residual	50060-1-0	Effluent Gross	4374										.85	mg/L	mg/L	Y
KY0080845	Great Oaks WWTF	McCracken	001-1	12/31/2017	Chlorine, total residual	50060-1-0	Effluent Gross									0	mg/L			mg/L	N
KY0080845	Great Oaks WWTF	McCracken	001-1	12/31/2017	Chlorine, total residual	50060-1-0	Effluent Gross											0	mg/L	mg/L	N
KY0080845	Great Oaks WWTF	McCracken	001-1	11/30/2017	Chlorine, total residual	50060-1-0	Effluent Gross									0	mg/L			mg/L	N
KY0080845	Great Oaks WWTF	McCracken	001-1	11/30/2017	Chlorine, total residual	50060-1-0	Effluent Gross											0	mg/L	mg/L	N
KY0080845	Great Oaks WWTF	McCracken	001-1	10/31/2017	Chlorine, total residual	50060-1-0	Effluent Gross									0	mg/L			mg/L	N
KY0080845	Great Oaks WWTF	McCracken	001-1	10/31/2017	Chlorine, total residual	50060-1-0	Effluent Gross											0	mg/L	mg/L	N
KY0080845	Great Oaks WWTF	McCracken	001-1	09/30/2017	Chlorine, total residual	50060-1-0	Effluent Gross									0	mg/L			mg/L	N
KY0080845	Great Oaks WWTF	McCracken	001-1	09/30/2017	Chlorine, total residual	50060-1-0	Effluent Gross											0	mg/L	mg/L	N
KY0080845	Great Oaks WWTF	McCracken	001-1	08/31/2017	Chlorine, total residual	50060-1-0	Effluent Gross									0	mg/L			mg/L	N
KY0080845	Great Oaks WWTF	McCracken	001-1	08/31/2017	Chlorine, total residual	50060-1-0	Effluent Gross											0	mg/L	mg/L	N
KY0080845	Great Oaks WWTF	McCracken	001-1	07/31/2017	Chlorine, total residual	50060-1-0	Effluent Gross									0	mg/L			mg/L	N
KY0080845	Great Oaks WWTF	McCracken	001-1	07/31/2017	Chlorine, total residual	50060-1-0	Effluent Gross											0	mg/L	mg/L	N
KY0080845	Great Oaks WWTF	McCracken	001-1	06/30/2017	Chlorine, total residual	50060-1-0	Effluent Gross									0	mg/L			mg/L	N
KY0080845	Great Oaks WWTF	McCracken	001-1	06/30/2017	Chlorine, total residual	50060-1-0	Effluent Gross											0	mg/L	mg/L	N
KY0080845	Great Oaks WWTF	McCracken	001-1	05/31/2017	Chlorine, total residual	50060-1-0	Effluent Gross									0	mg/L			mg/L	N
KY0080845	Great Oaks WWTF	McCracken	001-1	05/31/2017	Chlorine, total residual	50060-1-0	Effluent Gross											0	mg/L	mg/L	N
KY0080845	Great Oaks WWTF	McCracken	001-1	04/30/2017	Chlorine, total residual	50060-1-0	Effluent Gross									0	mg/L			mg/L	N
KY0080845	Great Oaks WWTF	McCracken	001-1	04/30/2017	Chlorine, total residual	50060-1-0	Effluent Gross											0	mg/L	mg/L	N
KY0080845	Great Oaks WWTF	McCracken	001-1	03/31/2017	Chlorine, total residual	50060-1-0	Effluent Gross									0	mg/L			mg/L	N
KY0080845	Great Oaks WWTF	McCracken	001-1	03/31/2017	Chlorine, total residual	50060-1-0	Effluent Gross											0	mg/L	mg/L	N
KY0080845	Great Oaks WWTF	McCracken	001-1	02/28/2017	Chlorine, total residual	50060-1-0	Effluent Gross									0	mg/L			mg/L	N

KY0080845	Great Oaks WWTF	McCracken	001-1	01/31/2017	Chlorine, total residual	50060-1-0	Effluent Gross								0	mg/L			mg/L	N
KY0080845	Great Oaks WWTF	McCracken	001-1	01/31/2017	Chlorine, total residual	50060-1-0	Effluent Gross										0	mg/L	mg/L	N
KY0080845	Great Oaks WWTF	McCracken	001-1	12/31/2016	Chlorine, total residual	50060-1-0	Effluent Gross								0	mg/L			mg/L	N
KY0080845	Great Oaks WWTF	McCracken	001-1	12/31/2016	Chlorine, total residual	50060-1-0	Effluent Gross										0	mg/L	mg/L	N
KY0080845	Great Oaks WWTF	McCracken	001-1	11/30/2016	Chlorine, total residual	50060-1-0	Effluent Gross								0	mg/L			mg/L	N
KY0080845	Great Oaks WWTF	McCracken	001-1	11/30/2016	Chlorine, total residual	50060-1-0	Effluent Gross										0	mg/L	mg/L	N
KY0080845	Great Oaks WWTF	McCracken	001-1	10/31/2016	Chlorine, total residual	50060-1-0	Effluent Gross								0	mg/L			mg/L	N
KY0080845	Great Oaks WWTF	McCracken	001-1	10/31/2016	Chlorine, total residual	50060-1-0	Effluent Gross										0	mg/L	mg/L	N
KY0080845	Great Oaks WWTF	McCracken	001-1	09/30/2016	Chlorine, total residual	50060-1-0	Effluent Gross								0	mg/L			mg/L	N
KY0080845	Great Oaks WWTF	McCracken	001-1	09/30/2016	Chlorine, total residual	50060-1-0	Effluent Gross										0	mg/L	mg/L	N
KY0080845	Great Oaks WWTF	McCracken	001-1	08/31/2016	Chlorine, total residual	50060-1-0	Effluent Gross								0	mg/L			mg/L	N
KY0080845	Great Oaks WWTF	McCracken	001-1	08/31/2016	Chlorine, total residual	50060-1-0	Effluent Gross										0	mg/L	mg/L	N
KY0080845	Great Oaks WWTF	McCracken	001-1	07/31/2016	Chlorine, total residual	50060-1-0	Effluent Gross								0	mg/L			mg/L	N
KY0080845	Great Oaks WWTF	McCracken	001-1	07/31/2016	Chlorine, total residual	50060-1-0	Effluent Gross										0	mg/L	mg/L	N
KY0080845	Great Oaks WWTF	McCracken	001-1	06/30/2016	Chlorine, total residual	50060-1-0	Effluent Gross								0	mg/L			mg/L	N
KY0080845	Great Oaks WWTF	McCracken	001-1	06/30/2016	Chlorine, total residual	50060-1-0	Effluent Gross										0	mg/L	mg/L	N
KY0080845	Great Oaks WWTF	McCracken	001-1	05/31/2016	Chlorine, total residual	50060-1-0	Effluent Gross								0	mg/L			mg/L	N
KY0080845	Great Oaks WWTF	McCracken	001-1	05/31/2016	Chlorine, total residual	50060-1-0	Effluent Gross										0	mg/L	mg/L	N
KY0080845	Great Oaks WWTF	McCracken	001-1	04/30/2016	Chlorine, total residual	50060-1-0	Effluent Gross								0	mg/L			mg/L	N
KY0080845	Great Oaks WWTF	McCracken	001-1	04/30/2016	Chlorine, total residual	50060-1-0	Effluent Gross										0	mg/L	mg/L	N
KY0080845	Great Oaks WWTF	McCracken	001-1	03/31/2016	Chlorine, total residual	50060-1-0	Effluent Gross								0	mg/L			mg/L	N
KY0080845	Great Oaks WWTF	McCracken	001-1	03/31/2016	Chlorine, total residual	50060-1-0	Effluent Gross										0	mg/L	mg/L	N
KY0080845	Great Oaks WWTF	McCracken	001-1	02/29/2016	Chlorine, total residual	50060-1-0	Effluent Gross								0	mg/L			mg/L	N
KY0080845	Great Oaks WWTF	McCracken	001-1	02/29/2016	Chlorine, total residual	50060-1-0	Effluent Gross										0	mg/L	mg/L	N
KY0080845	Great Oaks WWTF	McCracken	001-1	01/31/2016	Chlorine, total residual	50060-1-0	Effluent Gross								0	mg/L			mg/L	N
KY0080845	Great Oaks WWTF	McCracken	001-1	01/31/2016	Chlorine, total residual	50060-1-0	Effluent Gross										0	mg/L	mg/L	N
KY0080845	Great Oaks WWTF	McCracken	001-1	12/31/2015	Chlorine, total residual	50060-1-0	Effluent Gross								0	mg/L			mg/L	N
KY0080845	Great Oaks WWTF	McCracken	001-1	12/31/2015	Chlorine, total residual	50060-1-0	Effluent Gross										0	mg/L	mg/L	N
KY0080845	Great Oaks WWTF	McCracken	001-1	11/30/2015	Chlorine, total residual	50060-1-0	Effluent Gross								0	mg/L			mg/L	N
KY0080845	Great Oaks WWTF	McCracken	001-1	11/30/2015	Chlorine, total residual	50060-1-0	Effluent Gross										0	mg/L	mg/L	N
KY0080845	Great Oaks WWTF	McCracken	001-1	10/31/2015	Chlorine, total residual	50060-1-0	Effluent Gross								0	mg/L			mg/L	N
KY0080845	Great Oaks WWTF	McCracken	001-1	10/31/2015	Chlorine, total residual	50060-1-0	Effluent Gross										0	mg/L	mg/L	N
KY0080845	Great Oaks WWTF	McCracken	001-1	09/30/2015	Chlorine, total residual	50060-1-0	Effluent Gross								0	mg/L			mg/L	N
KY0080845	Great Oaks WWTF	McCracken	001-1	09/30/2015	Chlorine, total residual	50060-1-0	Effluent Gross										0	mg/L	mg/L	N
KY0080845	Great Oaks WWTF	McCracken	001-1	08/31/2015	Chlorine, total residual	50060-1-0	Effluent Gross								0	mg/L			mg/L	N
KY0080845	Great Oaks WWTF	McCracken	001-1	08/31/2015	Chlorine, total residual	50060-1-0	Effluent Gross										0	mg/L	mg/L	N
KY0080845	Great Oaks WWTF	McCracken	001-1	07/31/2015	Chlorine, total residual	50060-1-0	Effluent Gross								0	mg/L			mg/L	N
KY0080845	Great Oaks WWTF	McCracken	001-1	07/31/2015	Chlorine, total residual	50060-1-0	Effluent Gross										0	mg/L	mg/L	N
KY0080845	Great Oaks WWTF	McCracken	001-1	06/30/2015	Chlorine, total residual	50060-1-0	Effluent Gross								0	mg/L			mg/L	N
KY0080845	Great Oaks WWTF	McCracken	001-1	06/30/2015	Chlorine, total residual	50060-1-0	Effluent Gross										0	mg/L	mg/L	N
KY0080845	Great Oaks WWTF	McCracken	001-1	05/31/2015	Chlorine, total residual	50060-1-0	Effluent Gross								0	mg/L			mg/L	N
KY0080845	Great Oaks WWTF	McCracken	001-1	05/31/2015	Chlorine, total residual	50060-1-0	Effluent Gross										0	mg/L	mg/L	N
KY0080845	Great Oaks WWTF	McCracken	001-1	04/30/2015	Chlorine, total residual	50060-1-0	Effluent Gross								0	mg/L			mg/L	N
KY0080845	Great Oaks WWTF	McCracken	001-1	04/30/2015	Chlorine, total residual	50060-1-0	Effluent Gross										0	mg/L	mg/L	N
KY0080845	Great Oaks WWTF	McCracken	001-1	03/31/2015	Chlorine, total residual	50060-1-0	Effluent Gross								0	mg/L			mg/L	N
KY0080845	Great Oaks WWTF	McCracken	001-1	03/31/2015	Chlorine, total residual	50060-1-0	Effluent Gross										0	mg/L	mg/L	N
KY0080845	Great Oaks WWTF	McCracken	001-1	02/28/2015	Chlorine, total residual	50060-1-0	Effluent Gross								0	mg/L			mg/L	N
KY0080845	Great Oaks WWTF	McCracken	001-1	02/28/2015	Chlorine, total residual	50060-1-0	Effluent Gross										0	mg/L	mg/L	N
KY0080845	Great Oaks WWTF	McCracken	001-1	01/31/2015	Chlorine, total residual	50060-1-0	Effluent Gross								0	mg/L			mg/L	N
KY0080845	Great Oaks WWTF	McCracken	001-1	01/31/2015	Chlorine, total residual	50060-1-0	Effluent Gross										0	mg/L	mg/L	N
KY0080845	Great Oaks WWTF	McCracken	001-1	12/31/2014	Chlorine, total residual	50060-1-0	Effluent Gross								0	mg/L			mg/L	N
KY0080845	Great Oaks WWTF	McCracken	001-1	12/31/2014	Chlorine, total residual	50060-1-0	Effluent Gross										0	mg/L	mg/L	N
KY0080845	Great Oaks WWTF	McCracken	001-1	11/30/2014	Chlorine, total residual	50060-1-0	Effluent Gross								0	mg/L			mg/L	N
KY0080845	Great Oaks WWTF	McCracken	001-1	11/30/2014	Chlorine, total residual	50060-1-0	Effluent Gross										0	mg/L	mg/L	N
KY0080845	Great Oaks WWTF	McCracken	001-1	10/31/2014	Chlorine, total residual	50060-1-0	Effluent Gross								0	mg/L			mg/L	N
KY0080845	Great Oaks WWTF	McCracken	001-1	10/31/2014	Chlorine, total residual	50060-1-0	Effluent Gross										0	mg/L	mg/L	N
KY0080845	Great Oaks WWTF	McCracken	001-1	09/30/2019	E. coli	51040-1-0	Effluent Gross								9		9		#/100mL	N
KY0080845	Great Oaks WWTF	McCracken	001-1	08/31/2019	E. coli	51040-1-0	Effluent Gross								90		90		#/100mL	N
KY0080845	Great Oaks WWTF	McCracken	001-1	07/31/2019	E. coli	51040-1-0	Effluent Gross												#/100mL	N
KY0080845	Great Oaks WWTF	McCracken	001-1	06/30/2019	E. coli	51040-1-0	Effluent Gross												#/100mL	N
KY0080845	Great Oaks WWTF	McCracken	001-1	05/31/2019	E. coli	51040-1-0	Effluent Gross												#/100mL	N
KY0080845	Great Oaks WWTF	McCracken	001-1	04/30/2019	E. coli	51040-1-0	Effluent Gross												#/100mL	N
KY0080845	Great Oaks WWTF	McCracken	001-1	03/31/2019	E. coli	51040-1-0	Effluent Gross	1762							2420	#/100mL			#/100mL	Y
KY0080845	Great Oaks WWTF	McCracken	001-1	03/31/2019	E. coli	51040-1-0	Effluent Gross	908									2420	#/100mL	#/100mL	Y
KY0080845	Great Oaks WWTF	McCracken	001-1	02/28/2019	E. coli	51040-1-0	Effluent Gross								1	#/100mL			#/100mL	N
KY0080845	Great Oaks WWTF	McCracken	001-1	02/28/2019	E. coli	51040-1-0	Effluent Gross										1	#/100mL	#/100mL	N
KY0080845	Great Oaks WWTF	McCracken	001-1	01/31/2019	E. coli	51040-1-0	Effluent Gross								1	#/100mL			#/100mL	N
KY0080845	Great Oaks WWTF	McCracken	001-1	01/31/2019	E. coli	51040-1-0	Effluent Gross										1	#/100mL	#/100mL	N
KY0080845	Great Oaks WWTF	McCracken	001-1	12/31/2018	E. coli	51040-1-0	Effluent Gross	1762							2420	#/100mL			#/100mL	Y
KY0080845	Great Oaks WWTF	McCracken	001-1	12/31/2018	E. coli	51040-1-0	Effluent Gross	908									2420	#/100mL	#/100mL	Y
KY0080845	Great Oaks WWTF	McCracken	001-1	11/30/2018	E. coli	51040-1-0	Effluent Gross								1	#/100mL			#/100mL	N
KY0080845	Great Oaks WWTF	McCracken	001-1	11/30/2018	E. coli	51040-1-0	Effluent Gross										1	#/100mL	#/100mL	N
KY0080845	Great Oaks WWTF	McCracken	001-1	10/31/2018	E. coli	51040-1-0	Effluent Gross								1	#/100mL			#/100mL	N
KY0080845	Great Oaks WWTF	McCracken	001-1	10/31/2018	E. coli	51040-1-0	Effluent Gross										1	#/100mL	#/100mL	N
KY0080845	Great Oaks WWTF	McCracken	001-1	09/30/2018	E. coli	51040-1-0	Effluent Gross								1	#/100mL			#/100mL	N
KY0080845	Great Oaks WWTF	McCracken	001-1	09/30/2018	E. coli	51040-1-0	Effluent Gross										1	#/100mL	#/100mL	N
KY0080845	Great Oaks WWTF	McCracken	001-1	08/31/2018	E. coli	51040-1-0	Effluent Gross	1762							2420	#/100mL			#/100mL	Y
KY0080845	Great Oaks WWTF	McCracken	001-1	08/31/2018	E. coli	51040-1-0	Effluent Gross	908									2420	#/100mL	#/100mL	Y
KY0080845	Great Oaks WWTF	McCracken	001-1	07/31/2018	E. coli	51040-1-0	Effluent Gross								1	#/100mL			#/100mL	N
KY0080845	Great Oaks WWTF	McCracken	001-1	07/31/2018	E. coli	51040-1-0	Effluent Gross										1	#/100mL	#/100mL	N
KY0080845	Great Oaks WWTF	McCracken	001-1	06/30/2018	E. coli	51040-1-0	Effluent Gross	492							770	#/100mL			#/100mL	Y
KY0080845	Great Oaks WWTF	McCracken	001-1	06/30/2018	E. coli	51040-1-0	Effluent Gross	221									770	#/100mL	#/100mL	Y
KY0080845	Great Oaks WWTF	McCracken	001-1	05/31/2018	E. coli	51040-1-0	Effluent Gross	76							228.2	#/100mL			#/100mL	Y
KY0080845	Great Oaks WWTF	McCracken	001-1	05/31/2018	E. coli	51040-1-0	Effluent Gross										228.2	#/100mL	#/100mL	N
KY0080845	Great Oaks WWTF	McCracken	001-1	04/30/2018	E. coli	51040-1-0	Effluent Gross												#/100mL	N
KY0080845	Great Oaks WWTF	McCracken	001-1	03/31/2018	E. coli	51040-1-0	Effluent Gross	1762							2420	#/100mL			#/100mL	Y
KY0080845	Great Oaks WWTF	McCracken	001-1	03/31/2018	E. coli	51040-1-0	Effluent Gross	908									2420	#/100mL	#/100mL	Y
KY0080845	Great Oaks WWTF	McCracken	001-1	02/28/2018	E. coli	51040-1-0	Effluent Gross								122.3	#/100mL			#/100mL	N
KY0080845	Great Oaks WWTF	McCracken	001-1	02/28/2018	E. coli	51040-1-0	Effluent Gross										122.3	#/100mL	#/100mL	N
KY0080845	Great Oaks WWTF	McCracken	001-1	01/31/2018	E. coli	51040-1-0	Effluent Gross								1	#/100mL			#/100mL	N
KY0080845	Great Oaks WWTF	McCracken	001-1	01/31/2018	E. coli	51040-1-0	Effluent Gross										1	#/100mL	#/100mL	N
KY0080845	Great Oaks WWTF	McCracken	001-1	12/31/2017	E. coli	51040-1-0	Effluent Gross	59							206.4	#/100mL			#/100mL	Y
KY0080845	Great Oaks WWTF	McCracken	001-1	12/31/2017	E. coli	51040-1-0	Effluent Gross										206.4	#/100mL	#/100mL	N
KY0080845	Great Oaks WWTF	McCracken	001-1	11/30/2017	E. coli	51040-1-0	Effluent Gross								1	#/100mL			#/100mL	N
KY0080845	Great Oaks WWTF	McCracken	001-1	11/30/2017	E. coli	51040-1-0	Effluent Gross										1	#/100mL	#/100mL	N
KY0080845	Great Oaks WWTF	McCracken	001-1	10/31/2017	E. coli	51040-1-0	Effluent Gross								1	#/100mL			#/100mL	N
KY0080845	Great Oaks WWTF	McCracken	001-1	10/31/2017	E. coli	51040-1-0	Effluent Gross										1	#/100mL	#/100mL	N
KY0080845	Great Oaks WWTF	McCracken	001-1	09/30/2017	E. coli	51040-1-0	Effluent Gross								1	#/100mL			#/100mL	N
KY0080845	Great Oaks WWTF	McCracken	001-1	09/30/2017	E. coli	51040-1-0	Effluent Gross										1	#/100mL	#/100mL	N
KY0080845	Great Oaks WWTF	McCracken	001-1	08/31/2017	E. coli	51040-1-0	Effluent Gross								1	#/100mL			#/100mL	N
KY0080845	Great Oaks WWTF	McCracken	001-1	08/31/2017	E. coli	51040-1-0	Effluent Gross										1	#/100mL	#/100mL	N
KY0080845	Great Oaks WWTF	McCracken	001-1	07/31/2017	E. coli	51040-1-0	Effluent Gross								1	#/100mL			#/100mL	N
KY0080845	Great Oaks WWTF	McCracken	001-1	07/31/2017	E. coli	51040-1-0	Effluent Gross										1	#/100mL	#/100mL	N
KY0080845	Great Oaks WWTF	McCracken	001-1	06/30/2017	E. coli	51040-1-0	Effluent Gross								1	#/100mL			#/100mL	N
KY0080845	Great Oaks WWTF	McCracken	001-1	06/30/2017	E. coli	51040-1-0	Effluent Gross										1	#/100mL	#/100mL	N
KY0080845	Great Oaks WWTF	McCracken	001-1	05/31/2017	E. coli	51040-1-0	Effluent Gross								1	#/100mL			#/100mL	N
KY0080845	Great Oaks WWTF	McCracken	001-1	05/31/2017	E. coli	51040-1-0	Effluent Gross										1	#/100mL	#/100mL	N
KY0080845	Great Oaks WWTF	McCracken	001-1	04/30/2017	E. coli	51040-1-0	Effluent Gross								1	#/100mL			#/100mL	N
KY0080845	Great Oaks WWTF	McCracken	001-1	04/30/2017	E. coli	51040-1-0	Effluent Gross										1	#/100mL	#/100mL	N
KY0080845	Great Oaks WWTF	McCracken	001-1	03/31/2017	E. coli	51040-1-0	Effluent Gross								1	#/100mL			#/100mL	N
KY0080845	Great Oaks WWTF	McCracken	001-1	03/31/2017	E. coli	51040-1-0	Effluent Gross										1	#/100mL	#/100mL	N
KY0080845	Great Oaks WWTF	McCracken	001-1	02/28/2017	E. coli	51040-1-0	Effluent Gross								1	#/100mL			#/100mL	N
KY0080845	Great Oaks WWTF	McCracken	001-1	02/28/2017	E. coli	51040-1-0	Effluent Gross										1	#/100mL	#/100mL	N
KY0080845	Great Oaks WWTF	McCracken	001-1	01/31/2017	E. coli	51040-1-0	Effluent Gross								10	#/100mL			#/100mL	N

KY0080845	Great Oaks WWTF	McCracken	001-1	01/31/2017	E. coli	51040-1-0	Effluent Gross										10	#/100mL	#/100mL	N
KY0080845	Great Oaks WWTF	McCracken	001-1	12/31/2016	E. coli	51040-1-0	Effluent Gross									1	#/100mL			#/100mL	N
KY0080845	Great Oaks WWTF	McCracken	001-1	12/31/2016	E. coli	51040-1-0	Effluent Gross											1	#/100mL	#/100mL	N
KY0080845	Great Oaks WWTF	McCracken	001-1	11/30/2016	E. coli	51040-1-0	Effluent Gross									1	#/100mL			#/100mL	N
KY0080845	Great Oaks WWTF	McCracken	001-1	11/30/2016	E. coli	51040-1-0	Effluent Gross											1	#/100mL	#/100mL	N
KY0080845	Great Oaks WWTF	McCracken	001-1	10/31/2016	E. coli	51040-1-0	Effluent Gross									1	#/100mL			#/100mL	N
KY0080845	Great Oaks WWTF	McCracken	001-1	10/31/2016	E. coli	51040-1-0	Effluent Gross											1	#/100mL	#/100mL	N
KY0080845	Great Oaks WWTF	McCracken	001-1	09/30/2016	E. coli	51040-1-0	Effluent Gross									1	#/100mL			#/100mL	N
KY0080845	Great Oaks WWTF	McCracken	001-1	09/30/2016	E. coli	51040-1-0	Effluent Gross											1	#/100mL	#/100mL	N
KY0080845	Great Oaks WWTF	McCracken	001-1	08/31/2016	E. coli	51040-1-0	Effluent Gross									1	#/100mL			#/100mL	N
KY0080845	Great Oaks WWTF	McCracken	001-1	08/31/2016	E. coli	51040-1-0	Effluent Gross											1	#/100mL	#/100mL	N
KY0080845	Great Oaks WWTF	McCracken	001-1	07/31/2016	E. coli	51040-1-0	Effluent Gross									1	#/100mL			#/100mL	N
KY0080845	Great Oaks WWTF	McCracken	001-1	07/31/2016	E. coli	51040-1-0	Effluent Gross											1	#/100mL	#/100mL	N
KY0080845	Great Oaks WWTF	McCracken	001-1	06/30/2016	E. coli	51040-1-0	Effluent Gross									1	#/100mL			#/100mL	N
KY0080845	Great Oaks WWTF	McCracken	001-1	06/30/2016	E. coli	51040-1-0	Effluent Gross											1	#/100mL	#/100mL	N
KY0080845	Great Oaks WWTF	McCracken	001-1	05/31/2016	E. coli	51040-1-0	Effluent Gross									1	#/100mL			#/100mL	N
KY0080845	Great Oaks WWTF	McCracken	001-1	05/31/2016	E. coli	51040-1-0	Effluent Gross											1	#/100mL	#/100mL	N
KY0080845	Great Oaks WWTF	McCracken	001-1	04/30/2016	E. coli	51040-1-0	Effluent Gross									1	#/100mL			#/100mL	N
KY0080845	Great Oaks WWTF	McCracken	001-1	04/30/2016	E. coli	51040-1-0	Effluent Gross											1	#/100mL	#/100mL	N
KY0080845	Great Oaks WWTF	McCracken	001-1	03/31/2016	E. coli	51040-1-0	Effluent Gross									1	#/100mL			#/100mL	N
KY0080845	Great Oaks WWTF	McCracken	001-1	03/31/2016	E. coli	51040-1-0	Effluent Gross											1	#/100mL	#/100mL	N
KY0080845	Great Oaks WWTF	McCracken	001-1	02/29/2016	E. coli	51040-1-0	Effluent Gross									1	#/100mL			#/100mL	N
KY0080845	Great Oaks WWTF	McCracken	001-1	02/29/2016	E. coli	51040-1-0	Effluent Gross											1	#/100mL	#/100mL	N
KY0080845	Great Oaks WWTF	McCracken	001-1	01/31/2016	E. coli	51040-1-0	Effluent Gross									1	#/100mL			#/100mL	N
KY0080845	Great Oaks WWTF	McCracken	001-1	01/31/2016	E. coli	51040-1-0	Effluent Gross											1	#/100mL	#/100mL	N
KY0080845	Great Oaks WWTF	McCracken	001-1	12/31/2015	E. coli	51040-1-0	Effluent Gross									1	#/100mL			#/100mL	N
KY0080845	Great Oaks WWTF	McCracken	001-1	12/31/2015	E. coli	51040-1-0	Effluent Gross											1	#/100mL	#/100mL	N
KY0080845	Great Oaks WWTF	McCracken	001-1	11/30/2015	E. coli	51040-1-0	Effluent Gross									1	#/100mL			#/100mL	N
KY0080845	Great Oaks WWTF	McCracken	001-1	11/30/2015	E. coli	51040-1-0	Effluent Gross											1	#/100mL	#/100mL	N
KY0080845	Great Oaks WWTF	McCracken	001-1	10/31/2015	E. coli	51040-1-0	Effluent Gross									1	#/100mL			#/100mL	N
KY0080845	Great Oaks WWTF	McCracken	001-1	10/31/2015	E. coli	51040-1-0	Effluent Gross											1	#/100mL	#/100mL	N
KY0080845	Great Oaks WWTF	McCracken	001-1	09/30/2015	E. coli	51040-1-0	Effluent Gross									1	#/100mL			#/100mL	N
KY0080845	Great Oaks WWTF	McCracken	001-1	09/30/2015	E. coli	51040-1-0	Effluent Gross											1	#/100mL	#/100mL	N
KY0080845	Great Oaks WWTF	McCracken	001-1	08/31/2015	E. coli	51040-1-0	Effluent Gross									1	#/100mL			#/100mL	N
KY0080845	Great Oaks WWTF	McCracken	001-1	08/31/2015	E. coli	51040-1-0	Effluent Gross											1	#/100mL	#/100mL	N
KY0080845	Great Oaks WWTF	McCracken	001-1	07/31/2015	E. coli	51040-1-0	Effluent Gross									122	#/100mL			#/100mL	N
KY0080845	Great Oaks WWTF	McCracken	001-1	07/31/2015	E. coli	51040-1-0	Effluent Gross											122	#/100mL	#/100mL	N
KY0080845	Great Oaks WWTF	McCracken	001-1	06/30/2015	E. coli	51040-1-0	Effluent Gross									1	#/100mL			#/100mL	N
KY0080845	Great Oaks WWTF	McCracken	001-1	06/30/2015	E. coli	51040-1-0	Effluent Gross											1	#/100mL	#/100mL	N
KY0080845	Great Oaks WWTF	McCracken	001-1	05/31/2015	E. coli	51040-1-0	Effluent Gross									1	#/100mL			#/100mL	N
KY0080845	Great Oaks WWTF	McCracken	001-1	05/31/2015	E. coli	51040-1-0	Effluent Gross											1	#/100mL	#/100mL	N
KY0080845	Great Oaks WWTF	McCracken	001-1	04/30/2015	E. coli	51040-1-0	Effluent Gross									1	#/100mL			#/100mL	N
KY0080845	Great Oaks WWTF	McCracken	001-1	04/30/2015	E. coli	51040-1-0	Effluent Gross											1	#/100mL	#/100mL	N
KY0080845	Great Oaks WWTF	McCracken	001-1	03/31/2015	E. coli	51040-1-0	Effluent Gross									1	#/100mL			#/100mL	N
KY0080845	Great Oaks WWTF	McCracken	001-1	03/31/2015	E. coli	51040-1-0	Effluent Gross											1	#/100mL	#/100mL	N
KY0080845	Great Oaks WWTF	McCracken	001-1	02/28/2015	E. coli	51040-1-0	Effluent Gross									1	#/100mL			#/100mL	N
KY0080845	Great Oaks WWTF	McCracken	001-1	02/28/2015	E. coli	51040-1-0	Effluent Gross											1	#/100mL	#/100mL	N
KY0080845	Great Oaks WWTF	McCracken	001-1	01/31/2015	E. coli	51040-1-0	Effluent Gross									1	#/100mL			#/100mL	N
KY0080845	Great Oaks WWTF	McCracken	001-1	01/31/2015	E. coli	51040-1-0	Effluent Gross											1	#/100mL	#/100mL	N
KY0080845	Great Oaks WWTF	McCracken	001-1	12/31/2014	E. coli	51040-1-0	Effluent Gross									1	#/100mL			#/100mL	N
KY0080845	Great Oaks WWTF	McCracken	001-1	12/31/2014	E. coli	51040-1-0	Effluent Gross											1	#/100mL	#/100mL	N
KY0080845	Great Oaks WWTF	McCracken	001-1	11/30/2014	E. coli	51040-1-0	Effluent Gross	1233								1733	#/100mL			#/100mL	Y
KY0080845	Great Oaks WWTF	McCracken	001-1	11/30/2014	E. coli	51040-1-0	Effluent Gross	622										1733	#/100mL	#/100mL	Y
KY0080845	Great Oaks WWTF	McCracken	001-1	10/31/2014	E. coli	51040-1-0	Effluent Gross									1	#/100mL			#/100mL	N
KY0080845	Great Oaks WWTF	McCracken	001-1	10/31/2014	E. coli	51040-1-0	Effluent Gross											1	#/100mL	#/100mL	N
KY0080845	Great Oaks WWTF	McCracken	001-1	09/30/2019	BOD, carbonaceous [5 day,	80082-1-0	Effluent Gross		1		1		lb/d								N
KY0080845	Great Oaks WWTF	McCracken	001-1	09/30/2019	BOD, carbonaceous [5 day,	80082-1-0	Effluent Gross									4		4		mg/L	N
KY0080845	Great Oaks WWTF	McCracken	001-1	08/31/2019	BOD, carbonaceous [5 day,	80082-1-0	Effluent Gross		1		1		lb/d								N
KY0080845	Great Oaks WWTF	McCracken	001-1	08/31/2019	BOD, carbonaceous [5 day,	80082-1-0	Effluent Gross									3		3		mg/L	N
KY0080845	Great Oaks WWTF	McCracken	001-1	07/31/2019	BOD, carbonaceous [5 day,	80082-1-0	Effluent Gross						lb/d								N
KY0080845	Great Oaks WWTF	McCracken	001-1	07/31/2019	BOD, carbonaceous [5 day,	80082-1-0	Effluent Gross													mg/L	N
KY0080845	Great Oaks WWTF	McCracken	001-1	06/30/2019	BOD, carbonaceous [5 day,	80082-1-0	Effluent Gross						lb/d								N
KY0080845	Great Oaks WWTF	McCracken	001-1	06/30/2019	BOD, carbonaceous [5 day,	80082-1-0	Effluent Gross													mg/L	N
KY0080845	Great Oaks WWTF	McCracken	001-1	05/31/2019	BOD, carbonaceous [5 day,	80082-1-0	Effluent Gross						lb/d								N
KY0080845	Great Oaks WWTF	McCracken	001-1	05/31/2019	BOD, carbonaceous [5 day,	80082-1-0	Effluent Gross													mg/L	N
KY0080845	Great Oaks WWTF	McCracken	001-1	04/30/2019	BOD, carbonaceous [5 day,	80082-1-0	Effluent Gross						lb/d								N
KY0080845	Great Oaks WWTF	McCracken	001-1	04/30/2019	BOD, carbonaceous [5 day,	80082-1-0	Effluent Gross													mg/L	N
KY0080845	Great Oaks WWTF	McCracken	001-1	03/31/2019	BOD, carbonaceous [5 day,	80082-1-0	Effluent Gross	145	14.3	lb/d			lb/d								Y
KY0080845	Great Oaks WWTF	McCracken	001-1	03/31/2019	BOD, carbonaceous [5 day,	80082-1-0	Effluent Gross	63			14.3	lb/d	lb/d								Y
KY0080845	Great Oaks WWTF	McCracken	001-1	03/31/2019	BOD, carbonaceous [5 day,	80082-1-0	Effluent Gross	390								49	mg/L			mg/L	Y
KY0080845	Great Oaks WWTF	McCracken	001-1	03/31/2019	BOD, carbonaceous [5 day,	80082-1-0	Effluent Gross	227										49	mg/L	mg/L	Y
KY0080845	Great Oaks WWTF	McCracken	001-1	02/28/2019	BOD, carbonaceous [5 day,	80082-1-0	Effluent Gross		1.459	lb/d			lb/d								N
KY0080845	Great Oaks WWTF	McCracken	001-1	02/28/2019	BOD, carbonaceous [5 day,	80082-1-0	Effluent Gross				1.459	lb/d	lb/d								N
KY0080845	Great Oaks WWTF	McCracken	001-1	02/28/2019	BOD, carbonaceous [5 day,	80082-1-0	Effluent Gross									5	mg/L			mg/L	N
KY0080845	Great Oaks WWTF	McCracken	001-1	02/28/2019	BOD, carbonaceous [5 day,	80082-1-0	Effluent Gross											5	mg/L	mg/L	N
KY0080845	Great Oaks WWTF	McCracken	001-1	01/31/2019	BOD, carbonaceous [5 day,	80082-1-0	Effluent Gross	71	10	lb/d			lb/d								Y
KY0080845	Great Oaks WWTF	McCracken	001-1	01/31/2019	BOD, carbonaceous [5 day,	80082-1-0	Effluent Gross	14			10	lb/d	lb/d								Y
KY0080845	Great Oaks WWTF	McCracken	001-1	01/31/2019	BOD, carbonaceous [5 day,	80082-1-0	Effluent Gross	300								40	mg/L			mg/L	Y
KY0080845	Great Oaks WWTF	McCracken	001-1	01/31/2019	BOD, carbonaceous [5 day,	80082-1-0	Effluent Gross	167										40	mg/L	mg/L	Y
KY0080845	Great Oaks WWTF	McCracken	001-1	12/31/2018	BOD, carbonaceous [5 day,	80082-1-0	Effluent Gross		4.962	lb/d			lb/d								N
KY0080845	Great Oaks WWTF	McCracken	001-1	12/31/2018	BOD, carbonaceous [5 day,	80082-1-0	Effluent Gross				4.962	lb/d	lb/d								N
KY0080845	Great Oaks WWTF	McCracken	001-1	12/31/2018	BOD, carbonaceous [5 day,	80082-1-0	Effluent Gross	70								17	mg/L			mg/L	Y
KY0080845	Great Oaks WWTF	McCracken	001-1	12/31/2018	BOD, carbonaceous [5 day,	80082-1-0	Effluent Gross	13										17	mg/L	mg/L	Y
KY0080845	Great Oaks WWTF	McCracken	001-1	11/30/2018	BOD, carbonaceous [5 day,	80082-1-0	Effluent Gross	40	8.173	lb/d			lb/d								Y
KY0080845	Great Oaks WWTF	McCracken	001-1	11/30/2018	BOD, carbonaceous [5 day,	80082-1-0	Effluent Gross				8.173	lb/d	lb/d								N
KY0080845	Great Oaks WWTF	McCracken	001-1	11/30/2018	BOD, carbonaceous [5 day,	80082-1-0	Effluent Gross	250								35	mg/L			mg/L	Y
KY0080845	Great Oaks WWTF	McCracken	001-1	11/30/2018	BOD, carbonaceous [5 day,	80082-1-0	Effluent Gross	133										35	mg/L	mg/L	Y
KY0080845	Great Oaks WWTF	McCracken	001-1	10/31/2018	BOD, carbonaceous [5 day,	80082-1-0	Effluent Gross		1.563	lb/d			lb/d								N
KY0080845	Great Oaks WWTF	McCracken	001-1	10/31/2018	BOD, carbonaceous [5 day,	80082-1-0	Effluent Gross				1.563	lb/d	lb/d								N
KY0080845	Great Oaks WWTF	McCracken	001-1	10/31/2018	BOD, carbonaceous [5 day,	80082-1-0	Effluent Gross									5	mg/L			mg/L	N
KY0080845	Great Oaks WWTF	McCracken	001-1	10/31/2018	BOD, carbonaceous [5 day,	80082-1-0	Effluent Gross											5	mg/L	mg/L	N
KY0080845	Great Oaks WWTF	McCracken	001-1	09/30/2018	BOD, carbonaceous [5 day,	80082-1-0	Effluent Gross		2.71	lb/d			lb/d								N
KY0080845	Great Oaks WWTF	McCracken	001-1	09/30/2018	BOD, carbonaceous [5 day,	80082-1-0	Effluent Gross				2.71	lb/d	lb/d								N
KY0080845	Great Oaks WWTF	McCracken	001-1	09/30/2018	BOD, carbonaceous [5 day,	80082-1-0	Effluent Gross									5	mg/L			mg/L	N
KY0080845	Great Oaks WWTF	McCracken	001-1	09/30/2018	BOD, carbonaceous [5 day,	80082-1-0	Effluent Gross											5	mg/L	mg/L	N
KY0080845	Great Oaks WWTF	McCracken	001-1	08/31/2018	BOD, carbonaceous [5 day,	80082-1-0	Effluent Gross		2.335	lb/d			lb/d								N
KY0080845	Great Oaks WWTF	McCracken	001-1	08/31/2018	BOD, carbonaceous [5 day,	80082-1-0	Effluent Gross				2.335	lb/d	lb/d								N
KY0080845	Great Oaks WWTF	McCracken	001-1	08/31/2018	BOD, carbonaceous [5 day,	80082-1-0	Effluent Gross									10	mg/L			mg/L	N
KY0080845	Great Oaks WWTF	McCracken	001-1	08/31/2018	BOD, carbonaceous [5 day,	80082-1-0	Effluent Gross											10	mg/L	mg/L	N
KY0080845	Great Oaks WWTF	McCracken	001-1	07/31/2018	BOD, carbonaceous [5 day,	80082-1-0	Effluent Gross	86	10.84	lb/d			lb/d								Y
KY0080845	Great Oaks WWTF	McCracken	001-1	07/31/2018	BOD, carbonaceous [5 day,	80082-1-0	Effluent Gross	24			10.84	lb/d	lb/d								Y
KY0080845	Great Oaks WWTF	McCracken	001-1	07/31/2018	BOD, carbonaceous [5 day,	80082-1-0	Effluent Gross	420								52	mg/L			mg/L	Y
KY0080845	Great Oaks WWTF	McCracken	001-1	07/31/2018	BOD, carbonaceous [5 day,	80082-1-0	Effluent Gross	247										52	mg/L	mg/L	Y
KY0080845	Great Oaks WWTF	McCracken	001-1	06/30/2018	BOD, carbonaceous [5 day,	80082-1-0	Effluent Gross		1.042	lb/d			lb/d								N
KY0080845	Great Oaks WWTF	McCracken	001-1	06/30/2018	BOD, carbonaceous [5 day,	80082-1-0	Effluent Gross				1.042	lb/d	lb/d								N
KY0080845	Great Oaks WWTF	McCracken	001-1	06/30/2018	BOD, carbonaceous [5 day,	80082-1-0	Effluent Gross									5	mg/L			mg/L	N
KY0080845	Great Oaks WWTF	McCracken	001-1	06/30/2018	BOD, carbonaceous [5 day,	80082-1-0	Effluent Gross											5	mg/L	mg/L	N
KY0080845	Great Oaks WWTF	McCracken	001-1	05/31/2018	BOD, carbonaceous [5 day,	80082-1-0	Effluent Gross		1.251	lb/d			lb/d								N
KY0080845	Great Oaks WWTF	McCracken	001-1	05/31/2018	BOD, carbonaceous [5 day,	80082-1-0	Effluent Gross				1.251	lb/d	lb/d								N
KY0080845	Great Oaks WWTF	McCracken	001-1	05/31/2018	BOD, carbonaceous [5 day,	80082-1-0	Effluent Gross									5	mg/L			mg/L	N
KY0080845	Great Oaks WWTF	McCracken	001-1	05/31/2018	BOD, carbonaceous [5 day,	80082-1-0	Effluent Gross											5	mg/L	mg/L	N
KY0080845	Great Oaks WWTF	McCracken	001-1	04/30/2018	BOD, carbonaceous [5 day,	80082-1-0	Effluent Gross						lb/d								N
KY0080845	Great Oaks WWTF	McCracken	001-1	04/30/2018	BOD, carbonaceous [5 day,	80082-1-0	Effluent Gross													mg/L	N
KY0080845	Great Oaks WWTF	McCracken	001-1	03/31/2018	BOD, carbonaceous [5 day,	80082-1-0	Effluent Gross	46	8.506	lb/d			lb/d								Y

KY0080845	Great Oaks WWTF	McCracken	001-1	03/31/2018	BOD, carbonaceous [5 day,	80082-1-0	Effluent Gross				8.506	lb/d	lb/d							N
KY0080845	Great Oaks WWTF	McCracken	001-1	03/31/2018	BOD, carbonaceous [5 day,	80082-1-0	Effluent Gross	240								34	mg/L			mg/L	Y
KY0080845	Great Oaks WWTF	McCracken	001-1	03/31/2018	BOD, carbonaceous [5 day,	80082-1-0	Effluent Gross	127										34	mg/L	mg/L	Y
KY0080845	Great Oaks WWTF	McCracken	001-1	02/28/2018	BOD, carbonaceous [5 day,	80082-1-0	Effluent Gross		2.126	lb/d			lb/d								N
KY0080845	Great Oaks WWTF	McCracken	001-1	02/28/2018	BOD, carbonaceous [5 day,	80082-1-0	Effluent Gross				2.126	lb/d	lb/d								N
KY0080845	Great Oaks WWTF	McCracken	001-1	02/28/2018	BOD, carbonaceous [5 day,	80082-1-0	Effluent Gross									5	mg/L			mg/L	N
KY0080845	Great Oaks WWTF	McCracken	001-1	02/28/2018	BOD, carbonaceous [5 day,	80082-1-0	Effluent Gross											5	mg/L	mg/L	N
KY0080845	Great Oaks WWTF	McCracken	001-1	01/31/2018	BOD, carbonaceous [5 day,	80082-1-0	Effluent Gross		1.376	lb/d			lb/d								N
KY0080845	Great Oaks WWTF	McCracken	001-1	01/31/2018	BOD, carbonaceous [5 day,	80082-1-0	Effluent Gross				1.376	lb/d	lb/d								N
KY0080845	Great Oaks WWTF	McCracken	001-1	01/31/2018	BOD, carbonaceous [5 day,	80082-1-0	Effluent Gross									5	mg/L			mg/L	N
KY0080845	Great Oaks WWTF	McCracken	001-1	01/31/2018	BOD, carbonaceous [5 day,	80082-1-0	Effluent Gross											5	mg/L	mg/L	N
KY0080845	Great Oaks WWTF	McCracken	001-1	12/31/2017	BOD, carbonaceous [5 day,	80082-1-0	Effluent Gross		1.251	lb/d			lb/d								N
KY0080845	Great Oaks WWTF	McCracken	001-1	12/31/2017	BOD, carbonaceous [5 day,	80082-1-0	Effluent Gross				1.251	lb/d	lb/d								N
KY0080845	Great Oaks WWTF	McCracken	001-1	12/31/2017	BOD, carbonaceous [5 day,	80082-1-0	Effluent Gross									5	mg/L			mg/L	N
KY0080845	Great Oaks WWTF	McCracken	001-1	12/31/2017	BOD, carbonaceous [5 day,	80082-1-0	Effluent Gross											5	mg/L	mg/L	N
KY0080845	Great Oaks WWTF	McCracken	001-1	11/30/2017	BOD, carbonaceous [5 day,	80082-1-0	Effluent Gross		1.376	lb/d			lb/d								N
KY0080845	Great Oaks WWTF	McCracken	001-1	11/30/2017	BOD, carbonaceous [5 day,	80082-1-0	Effluent Gross				1.376	lb/d	lb/d								N
KY0080845	Great Oaks WWTF	McCracken	001-1	11/30/2017	BOD, carbonaceous [5 day,	80082-1-0	Effluent Gross									5	mg/L			mg/L	N
KY0080845	Great Oaks WWTF	McCracken	001-1	11/30/2017	BOD, carbonaceous [5 day,	80082-1-0	Effluent Gross											5	mg/L	mg/L	N
KY0080845	Great Oaks WWTF	McCracken	001-1	10/31/2017	BOD, carbonaceous [5 day,	80082-1-0	Effluent Gross		1.042	lb/d			lb/d								N
KY0080845	Great Oaks WWTF	McCracken	001-1	10/31/2017	BOD, carbonaceous [5 day,	80082-1-0	Effluent Gross				1.042	lb/d	lb/d								N
KY0080845	Great Oaks WWTF	McCracken	001-1	10/31/2017	BOD, carbonaceous [5 day,	80082-1-0	Effluent Gross									5	mg/L			mg/L	N
KY0080845	Great Oaks WWTF	McCracken	001-1	10/31/2017	BOD, carbonaceous [5 day,	80082-1-0	Effluent Gross											5	mg/L	mg/L	N
KY0080845	Great Oaks WWTF	McCracken	001-1	09/30/2017	BOD, carbonaceous [5 day,	80082-1-0	Effluent Gross		1.251	lb/d			lb/d								N
KY0080845	Great Oaks WWTF	McCracken	001-1	09/30/2017	BOD, carbonaceous [5 day,	80082-1-0	Effluent Gross				1.251	lb/d	lb/d								N
KY0080845	Great Oaks WWTF	McCracken	001-1	09/30/2017	BOD, carbonaceous [5 day,	80082-1-0	Effluent Gross									5	mg/L			mg/L	N
KY0080845	Great Oaks WWTF	McCracken	001-1	09/30/2017	BOD, carbonaceous [5 day,	80082-1-0	Effluent Gross											5	mg/L	mg/L	N
KY0080845	Great Oaks WWTF	McCracken	001-1	08/31/2017	BOD, carbonaceous [5 day,	80082-1-0	Effluent Gross		1.542	lb/d			lb/d								N
KY0080845	Great Oaks WWTF	McCracken	001-1	08/31/2017	BOD, carbonaceous [5 day,	80082-1-0	Effluent Gross				1.542	lb/d	lb/d								N
KY0080845	Great Oaks WWTF	McCracken	001-1	08/31/2017	BOD, carbonaceous [5 day,	80082-1-0	Effluent Gross									5	mg/L			mg/L	N
KY0080845	Great Oaks WWTF	McCracken	001-1	08/31/2017	BOD, carbonaceous [5 day,	80082-1-0	Effluent Gross											5	mg/L	mg/L	N
KY0080845	Great Oaks WWTF	McCracken	001-1	07/31/2017	BOD, carbonaceous [5 day,	80082-1-0	Effluent Gross		1.267	lb/d			lb/d								N
KY0080845	Great Oaks WWTF	McCracken	001-1	07/31/2017	BOD, carbonaceous [5 day,	80082-1-0	Effluent Gross				1.267	lb/d	lb/d								N
KY0080845	Great Oaks WWTF	McCracken	001-1	07/31/2017	BOD, carbonaceous [5 day,	80082-1-0	Effluent Gross									7.6	mg/L			mg/L	N
KY0080845	Great Oaks WWTF	McCracken	001-1	07/31/2017	BOD, carbonaceous [5 day,	80082-1-0	Effluent Gross											7.6	mg/L	mg/L	N
KY0080845	Great Oaks WWTF	McCracken	001-1	06/30/2017	BOD, carbonaceous [5 day,	80082-1-0	Effluent Gross		1.0425	lb/d			lb/d								N
KY0080845	Great Oaks WWTF	McCracken	001-1	06/30/2017	BOD, carbonaceous [5 day,	80082-1-0	Effluent Gross				1.0425	lb/d	lb/d								N
KY0080845	Great Oaks WWTF	McCracken	001-1	06/30/2017	BOD, carbonaceous [5 day,	80082-1-0	Effluent Gross									5	mg/L			mg/L	N
KY0080845	Great Oaks WWTF	McCracken	001-1	06/30/2017	BOD, carbonaceous [5 day,	80082-1-0	Effluent Gross											5	mg/L	mg/L	N
KY0080845	Great Oaks WWTF	McCracken	001-1	05/31/2017	BOD, carbonaceous [5 day,	80082-1-0	Effluent Gross		1.251	lb/d			lb/d								N
KY0080845	Great Oaks WWTF	McCracken	001-1	05/31/2017	BOD, carbonaceous [5 day,	80082-1-0	Effluent Gross				1.251	lb/d	lb/d								N
KY0080845	Great Oaks WWTF	McCracken	001-1	05/31/2017	BOD, carbonaceous [5 day,	80082-1-0	Effluent Gross									5	mg/L			mg/L	N
KY0080845	Great Oaks WWTF	McCracken	001-1	05/31/2017	BOD, carbonaceous [5 day,	80082-1-0	Effluent Gross											5	mg/L	mg/L	N
KY0080845	Great Oaks WWTF	McCracken	001-1	04/30/2017	BOD, carbonaceous [5 day,	80082-1-0	Effluent Gross		1.5429	lb/d			lb/d								N
KY0080845	Great Oaks WWTF	McCracken	001-1	04/30/2017	BOD, carbonaceous [5 day,	80082-1-0	Effluent Gross				1.5429	lb/d	lb/d								N
KY0080845	Great Oaks WWTF	McCracken	001-1	04/30/2017	BOD, carbonaceous [5 day,	80082-1-0	Effluent Gross									5	mg/L			mg/L	N
KY0080845	Great Oaks WWTF	McCracken	001-1	04/30/2017	BOD, carbonaceous [5 day,	80082-1-0	Effluent Gross											5	mg/L	mg/L	N
KY0080845	Great Oaks WWTF	McCracken	001-1	03/31/2017	BOD, carbonaceous [5 day,	80082-1-0	Effluent Gross		1.876	lb/d			lb/d								N
KY0080845	Great Oaks WWTF	McCracken	001-1	03/31/2017	BOD, carbonaceous [5 day,	80082-1-0	Effluent Gross				1.876	lb/d	lb/d								N
KY0080845	Great Oaks WWTF	McCracken	001-1	03/31/2017	BOD, carbonaceous [5 day,	80082-1-0	Effluent Gross									5	mg/L			mg/L	N
KY0080845	Great Oaks WWTF	McCracken	001-1	03/31/2017	BOD, carbonaceous [5 day,	80082-1-0	Effluent Gross											5	mg/L	mg/L	N
KY0080845	Great Oaks WWTF	McCracken	001-1	02/28/2017	BOD, carbonaceous [5 day,	80082-1-0	Effluent Gross		1.251	lb/d			lb/d								N
KY0080845	Great Oaks WWTF	McCracken	001-1	02/28/2017	BOD, carbonaceous [5 day,	80082-1-0	Effluent Gross				1.251	lb/d	lb/d								N
KY0080845	Great Oaks WWTF	McCracken	001-1	02/28/2017	BOD, carbonaceous [5 day,	80082-1-0	Effluent Gross									5	mg/L			mg/L	N
KY0080845	Great Oaks WWTF	McCracken	001-1	02/28/2017	BOD, carbonaceous [5 day,	80082-1-0	Effluent Gross											5	mg/L	mg/L	N
KY0080845	Great Oaks WWTF	McCracken	001-1	01/31/2017	BOD, carbonaceous [5 day,	80082-1-0	Effluent Gross		1.459	lb/d			lb/d								N
KY0080845	Great Oaks WWTF	McCracken	001-1	01/31/2017	BOD, carbonaceous [5 day,	80082-1-0	Effluent Gross				1.459	lb/d	lb/d								N
KY0080845	Great Oaks WWTF	McCracken	001-1	01/31/2017	BOD, carbonaceous [5 day,	80082-1-0	Effluent Gross									5	mg/L			mg/L	N
KY0080845	Great Oaks WWTF	McCracken	001-1	12/31/2016	BOD, carbonaceous [5 day,	80082-1-0	Effluent Gross		1.125	lb/d			lb/d								N
KY0080845	Great Oaks WWTF	McCracken	001-1	12/31/2016	BOD, carbonaceous [5 day,	80082-1-0	Effluent Gross				1.125	lb/d	lb/d								N
KY0080845	Great Oaks WWTF	McCracken	001-1	12/31/2016	BOD, carbonaceous [5 day,	80082-1-0	Effluent Gross									5	mg/L			mg/L	N
KY0080845	Great Oaks WWTF	McCracken	001-1	12/31/2016	BOD, carbonaceous [5 day,	80082-1-0	Effluent Gross											5	mg/L	mg/L	N
KY0080845	Great Oaks WWTF	McCracken	001-1	11/30/2016	BOD, carbonaceous [5 day,	80082-1-0	Effluent Gross		2.085	lb/d			lb/d								N
KY0080845	Great Oaks WWTF	McCracken	001-1	11/30/2016	BOD, carbonaceous [5 day,	80082-1-0	Effluent Gross				2.085	lb/d	lb/d								N
KY0080845	Great Oaks WWTF	McCracken	001-1	11/30/2016	BOD, carbonaceous [5 day,	80082-1-0	Effluent Gross									5	mg/L			mg/L	N
KY0080845	Great Oaks WWTF	McCracken	001-1	11/30/2016	BOD, carbonaceous [5 day,	80082-1-0	Effluent Gross											5	mg/L	mg/L	N
KY0080845	Great Oaks WWTF	McCracken	001-1	10/31/2016	BOD, carbonaceous [5 day,	80082-1-0	Effluent Gross		1.459	lb/d			lb/d								N
KY0080845	Great Oaks WWTF	McCracken	001-1	10/31/2016	BOD, carbonaceous [5 day,	80082-1-0	Effluent Gross				1.459	lb/d	lb/d								N
KY0080845	Great Oaks WWTF	McCracken	001-1	10/31/2016	BOD, carbonaceous [5 day,	80082-1-0	Effluent Gross									5	mg/L			mg/L	N
KY0080845	Great Oaks WWTF	McCracken	001-1	10/31/2016	BOD, carbonaceous [5 day,	80082-1-0	Effluent Gross											5	mg/L	mg/L	N
KY0080845	Great Oaks WWTF	McCracken	001-1	09/30/2016	BOD, carbonaceous [5 day,	80082-1-0	Effluent Gross		1.459	lb/d			lb/d								N
KY0080845	Great Oaks WWTF	McCracken	001-1	09/30/2016	BOD, carbonaceous [5 day,	80082-1-0	Effluent Gross				1.459	lb/d	lb/d								N
KY0080845	Great Oaks WWTF	McCracken	001-1	09/30/2016	BOD, carbonaceous [5 day,	80082-1-0	Effluent Gross									5	mg/L			mg/L	N
KY0080845	Great Oaks WWTF	McCracken	001-1	09/30/2016	BOD, carbonaceous [5 day,	80082-1-0	Effluent Gross											5	mg/L	mg/L	N
KY0080845	Great Oaks WWTF	McCracken	001-1	08/31/2016	BOD, carbonaceous [5 day,	80082-1-0	Effluent Gross		1.042	lb/d			lb/d								N
KY0080845	Great Oaks WWTF	McCracken	001-1	08/31/2016	BOD, carbonaceous [5 day,	80082-1-0	Effluent Gross				1.042	lb/d	lb/d								N
KY0080845	Great Oaks WWTF	McCracken	001-1	08/31/2016	BOD, carbonaceous [5 day,	80082-1-0	Effluent Gross									5	mg/L			mg/L	N
KY0080845	Great Oaks WWTF	McCracken	001-1	08/31/2016	BOD, carbonaceous [5 day,	80082-1-0	Effluent Gross											5	mg/L	mg/L	N
KY0080845	Great Oaks WWTF	McCracken	001-1	07/31/2016	BOD, carbonaceous [5 day,	80082-1-0	Effluent Gross		2.293	lb/d			lb/d								N
KY0080845	Great Oaks WWTF	McCracken	001-1	07/31/2016	BOD, carbonaceous [5 day,	80082-1-0	Effluent Gross				2.293	lb/d	lb/d								N
KY0080845	Great Oaks WWTF	McCracken	001-1	07/31/2016	BOD, carbonaceous [5 day,	80082-1-0	Effluent Gross									5	mg/L			mg/L	N
KY0080845	Great Oaks WWTF	McCracken	001-1	07/31/2016	BOD, carbonaceous [5 day,	80082-1-0	Effluent Gross											5	mg/L	mg/L	N
KY0080845	Great Oaks WWTF	McCracken	001-1	06/30/2016	BOD, carbonaceous [5 day,	80082-1-0	Effluent Gross		1.459	lb/d			lb/d								N
KY0080845	Great Oaks WWTF	McCracken	001-1	06/30/2016	BOD, carbonaceous [5 day,	80082-1-0	Effluent Gross				1.459	lb/d	lb/d								N
KY0080845	Great Oaks WWTF	McCracken	001-1	06/30/2016	BOD, carbonaceous [5 day,	80082-1-0	Effluent Gross									5	mg/L			mg/L	N
KY0080845	Great Oaks WWTF	McCracken	001-1	06/30/2016	BOD, carbonaceous [5 day,	80082-1-0	Effluent Gross											5	mg/L	mg/L	N
KY0080845	Great Oaks WWTF	McCracken	001-1	05/31/2016	BOD, carbonaceous [5 day,	80082-1-0	Effluent Gross		1.701	lb/d			lb/d								N
KY0080845	Great Oaks WWTF	McCracken	001-1	05/31/2016	BOD, carbonaceous [5 day,	80082-1-0	Effluent Gross				1.701	lb/d	lb/d								N
KY0080845	Great Oaks WWTF	McCracken	001-1	05/31/2016	BOD, carbonaceous [5 day,	80082-1-0	Effluent Gross									5.1	mg/L			mg/L	N
KY0080845	Great Oaks WWTF	McCracken	001-1	05/31/2016	BOD, carbonaceous [5 day,	80082-1-0	Effluent Gross											5.1	mg/L	mg/L	N
KY0080845	Great Oaks WWTF	McCracken	001-1	04/30/2016	BOD, carbonaceous [5 day,	80082-1-0	Effluent Gross		2.085	lb/d			lb/d								N
KY0080845	Great Oaks WWTF	McCracken	001-1	04/30/2016	BOD, carbonaceous [5 day,	80082-1-0	Effluent Gross				2.085	lb/d	lb/d								N
KY0080845	Great Oaks WWTF	McCracken	001-1	04/30/2016	BOD, carbonaceous [5 day,	80082-1-0	Effluent Gross									5	mg/L			mg/L	N
KY0080845	Great Oaks WWTF	McCracken	001-1	04/30/2016	BOD, carbonaceous [5 day,	80082-1-0	Effluent Gross											5	mg/L	mg/L	N
KY0080845	Great Oaks WWTF	McCracken	001-1	03/31/2016	BOD, carbonaceous [5 day,	80082-1-0	Effluent Gross		2.085	lb/d			lb/d								N
KY0080845	Great Oaks WWTF	McCracken	001-1	03/31/2016	BOD, carbonaceous [5 day,	80082-1-0	Effluent Gross				2.085	lb/d	lb/d								N
KY0080845	Great Oaks WWTF	McCracken	001-1	03/31/2016	BOD, carbonaceous [5 day,	80082-1-0	Effluent Gross									5	mg/L			mg/L	N
KY0080845	Great Oaks WWTF	McCracken	001-1	03/31/2016	BOD, carbonaceous [5 day,	80082-1-0	Effluent Gross											5	mg/L	mg/L	N
KY0080845	Great Oaks WWTF	McCracken	001-1	02/29/2016	BOD, carbonaceous [5 day,	80082-1-0	Effluent Gross		5.671	lb/d			lb/d								N
KY0080845	Great Oaks WWTF	McCracken	001-1	02/29/2016	BOD, carbonaceous [5 day,	80082-1-0	Effluent Gross				5.671	lb/d	lb/d								N
KY0080845	Great Oaks WWTF	McCracken	001-1	02/29/2016	BOD, carbonaceous [5 day,	80082-1-0	Effluent Gross	70								17	mg/L			mg/L	Y
KY0080845	Great Oaks WWTF	McCracken	001-1	02/29/2016	BOD, carbonaceous [5 day,	80082-1-0	Effluent Gross	13										17	mg/L	mg/L	Y
KY0080845	Great Oaks WWTF	McCracken	001-1	01/31/2016	BOD, carbonaceous [5 day,	80082-1-0	Effluent Gross		1.042	lb/d			lb/d								N
KY0080845	Great Oaks WWTF	McCracken	001-1	01/31/2016	BOD, carbonaceous [5 day,	80082-1-0	Effluent Gross				1.042	lb/d	lb/d								N
KY0080845	Great Oaks WWTF	McCracken	001-1	01/31/2016	BOD, carbonaceous [5 day,	80082-1-0	Effluent Gross									5	mg/L			mg/L	N
KY0080845	Great Oaks WWTF	McCracken	001-1	01/31/2016	BOD, carbonaceous [5 day,	80082-1-0	Effluent Gross											5	mg/L	mg/L	N
KY0080845	Great Oaks WWTF	McCracken	001-1	12/31/2015	BOD, carbonaceous [5 day,	80082-1-0	Effluent Gross		1.668	lb/d			lb/d								N
KY0080845	Great Oaks WWTF	McCracken	001-1	12/31/2015	BOD, carbonaceous [5 day,	80082-1-0	Effluent Gross				1.668	lb/d	lb/d								N
KY0080845	Great Oaks WWTF	McCracken	001-1	12/31/2015	BOD, carbonaceous [5 day,	80082-1-0	Effluent Gross									5	mg/L			mg/L	N
KY0080845	Great Oaks WWTF	McCracken	001-1	12/31/2015	BOD, carbonaceous [5 day,	80082-1-0	Effluent Gross											5	mg/L	mg/L	N
KY0080845	Great Oaks WWTF	McCracken	001-1	11/30/2015	BOD, carbonaceous [5 day,	80082-1-0	Effluent Gross		3.627	lb/d			lb/d								N
KY0080845	Great Oaks WWTF	McCracken	001-1	11/30/2015	BOD, carbonaceous [5 day,	80082-1-0	Effluent Gross				3.627	lb/d	lb/d								N
KY0080845	Great Oaks WWTF	McCracken	001-1	11/30/2015	BOD, carbonaceous [5 day,	80082-1-0	Effluent Gross	10								11	mg/L			mg/L	Y

KY0080845	Great Oaks WWTF	McCracken	001-1	11/30/2015	BOD, carbonaceous [5 day,	80082-1-0	Effluent Gross											11	mg/L	mg/L	N
KY0080845	Great Oaks WWTF	McCracken	001-1	10/31/2015	BOD, carbonaceous [5 day,	80082-1-0	Effluent Gross		1.751	lb/d			lb/d								N
KY0080845	Great Oaks WWTF	McCracken	001-1	10/31/2015	BOD, carbonaceous [5 day,	80082-1-0	Effluent Gross				1.751	lb/d	lb/d								N
KY0080845	Great Oaks WWTF	McCracken	001-1	10/31/2015	BOD, carbonaceous [5 day,	80082-1-0	Effluent Gross									5	mg/L			mg/L	N
KY0080845	Great Oaks WWTF	McCracken	001-1	10/31/2015	BOD, carbonaceous [5 day,	80082-1-0	Effluent Gross											5	mg/L	mg/L	N
KY0080845	Great Oaks WWTF	McCracken	001-1	09/30/2015	BOD, carbonaceous [5 day,	80082-1-0	Effluent Gross		2.1684	lb/d			lb/d								N
KY0080845	Great Oaks WWTF	McCracken	001-1	09/30/2015	BOD, carbonaceous [5 day,	80082-1-0	Effluent Gross				2.1684	lb/d	lb/d								N
KY0080845	Great Oaks WWTF	McCracken	001-1	09/30/2015	BOD, carbonaceous [5 day,	80082-1-0	Effluent Gross									5	mg/L			mg/L	N
KY0080845	Great Oaks WWTF	McCracken	001-1	09/30/2015	BOD, carbonaceous [5 day,	80082-1-0	Effluent Gross											5	mg/L	mg/L	N
KY0080845	Great Oaks WWTF	McCracken	001-1	08/31/2015	BOD, carbonaceous [5 day,	80082-1-0	Effluent Gross		1.334	lb/d			lb/d								N
KY0080845	Great Oaks WWTF	McCracken	001-1	08/31/2015	BOD, carbonaceous [5 day,	80082-1-0	Effluent Gross				1.334	lb/d	lb/d								N
KY0080845	Great Oaks WWTF	McCracken	001-1	08/31/2015	BOD, carbonaceous [5 day,	80082-1-0	Effluent Gross									5	mg/L			mg/L	N
KY0080845	Great Oaks WWTF	McCracken	001-1	08/31/2015	BOD, carbonaceous [5 day,	80082-1-0	Effluent Gross											5	mg/L	mg/L	N
KY0080845	Great Oaks WWTF	McCracken	001-1	07/31/2015	BOD, carbonaceous [5 day,	80082-1-0	Effluent Gross		1.251	lb/d			lb/d								N
KY0080845	Great Oaks WWTF	McCracken	001-1	07/31/2015	BOD, carbonaceous [5 day,	80082-1-0	Effluent Gross				1.251	lb/d	lb/d								N
KY0080845	Great Oaks WWTF	McCracken	001-1	07/31/2015	BOD, carbonaceous [5 day,	80082-1-0	Effluent Gross									5	mg/L			mg/L	N
KY0080845	Great Oaks WWTF	McCracken	001-1	07/31/2015	BOD, carbonaceous [5 day,	80082-1-0	Effluent Gross											5	mg/L	mg/L	N
KY0080845	Great Oaks WWTF	McCracken	001-1	06/30/2015	BOD, carbonaceous [5 day,	80082-1-0	Effluent Gross		1.459	lb/d			lb/d								N
KY0080845	Great Oaks WWTF	McCracken	001-1	06/30/2015	BOD, carbonaceous [5 day,	80082-1-0	Effluent Gross				1.459	lb/d	lb/d								N
KY0080845	Great Oaks WWTF	McCracken	001-1	06/30/2015	BOD, carbonaceous [5 day,	80082-1-0	Effluent Gross									5	mg/L			mg/L	N
KY0080845	Great Oaks WWTF	McCracken	001-1	06/30/2015	BOD, carbonaceous [5 day,	80082-1-0	Effluent Gross											5	mg/L	mg/L	N
KY0080845	Great Oaks WWTF	McCracken	001-1	05/31/2015	BOD, carbonaceous [5 day,	80082-1-0	Effluent Gross	29	7.506	lb/d			lb/d								Y
KY0080845	Great Oaks WWTF	McCracken	001-1	05/31/2015	BOD, carbonaceous [5 day,	80082-1-0	Effluent Gross				7.506	lb/d	lb/d								N
KY0080845	Great Oaks WWTF	McCracken	001-1	05/31/2015	BOD, carbonaceous [5 day,	80082-1-0	Effluent Gross	400								50	mg/L			mg/L	Y
KY0080845	Great Oaks WWTF	McCracken	001-1	05/31/2015	BOD, carbonaceous [5 day,	80082-1-0	Effluent Gross	233										50	mg/L	mg/L	Y
KY0080845	Great Oaks WWTF	McCracken	001-1	04/30/2015	BOD, carbonaceous [5 day,	80082-1-0	Effluent Gross		1.668	lb/d			lb/d								N
KY0080845	Great Oaks WWTF	McCracken	001-1	04/30/2015	BOD, carbonaceous [5 day,	80082-1-0	Effluent Gross				1.668	lb/d	lb/d								N
KY0080845	Great Oaks WWTF	McCracken	001-1	04/30/2015	BOD, carbonaceous [5 day,	80082-1-0	Effluent Gross									5	mg/L			mg/L	N
KY0080845	Great Oaks WWTF	McCracken	001-1	04/30/2015	BOD, carbonaceous [5 day,	80082-1-0	Effluent Gross											5	mg/L	mg/L	N
KY0080845	Great Oaks WWTF	McCracken	001-1	03/31/2015	BOD, carbonaceous [5 day,	80082-1-0	Effluent Gross		1.751	lb/d			lb/d								N
KY0080845	Great Oaks WWTF	McCracken	001-1	03/31/2015	BOD, carbonaceous [5 day,	80082-1-0	Effluent Gross				1.751	lb/d	lb/d								N
KY0080845	Great Oaks WWTF	McCracken	001-1	03/31/2015	BOD, carbonaceous [5 day,	80082-1-0	Effluent Gross									5	mg/L			mg/L	N
KY0080845	Great Oaks WWTF	McCracken	001-1	03/31/2015	BOD, carbonaceous [5 day,	80082-1-0	Effluent Gross											5	mg/L	mg/L	N
KY0080845	Great Oaks WWTF	McCracken	001-1	02/28/2015	BOD, carbonaceous [5 day,	80082-1-0	Effluent Gross		1.459	lb/d			lb/d								N
KY0080845	Great Oaks WWTF	McCracken	001-1	02/28/2015	BOD, carbonaceous [5 day,	80082-1-0	Effluent Gross				1.459	lb/d	lb/d								N
KY0080845	Great Oaks WWTF	McCracken	001-1	02/28/2015	BOD, carbonaceous [5 day,	80082-1-0	Effluent Gross									5	mg/L			mg/L	N
KY0080845	Great Oaks WWTF	McCracken	001-1	02/28/2015	BOD, carbonaceous [5 day,	80082-1-0	Effluent Gross											5	mg/L	mg/L	N
KY0080845	Great Oaks WWTF	McCracken	001-1	01/31/2015	BOD, carbonaceous [5 day,	80082-1-0	Effluent Gross		1.709	lb/d			lb/d								N
KY0080845	Great Oaks WWTF	McCracken	001-1	01/31/2015	BOD, carbonaceous [5 day,	80082-1-0	Effluent Gross				1.709	lb/d	lb/d								N
KY0080845	Great Oaks WWTF	McCracken	001-1	01/31/2015	BOD, carbonaceous [5 day,	80082-1-0	Effluent Gross									5	mg/L			mg/L	N
KY0080845	Great Oaks WWTF	McCracken	001-1	01/31/2015	BOD, carbonaceous [5 day,	80082-1-0	Effluent Gross											5	mg/L	mg/L	N
KY0080845	Great Oaks WWTF	McCracken	001-1	12/31/2014	BOD, carbonaceous [5 day,	80082-1-0	Effluent Gross		1.751	lb/d			lb/d								N
KY0080845	Great Oaks WWTF	McCracken	001-1	12/31/2014	BOD, carbonaceous [5 day,	80082-1-0	Effluent Gross				1.751	lb/d	lb/d								N
KY0080845	Great Oaks WWTF	McCracken	001-1	12/31/2014	BOD, carbonaceous [5 day,	80082-1-0	Effluent Gross									5	mg/L			mg/L	N
KY0080845	Great Oaks WWTF	McCracken	001-1	12/31/2014	BOD, carbonaceous [5 day,	80082-1-0	Effluent Gross											5	mg/L	mg/L	N
KY0080845	Great Oaks WWTF	McCracken	001-1	11/30/2014	BOD, carbonaceous [5 day,	80082-1-0	Effluent Gross		1.459	lb/d			lb/d								N
KY0080845	Great Oaks WWTF	McCracken	001-1	11/30/2014	BOD, carbonaceous [5 day,	80082-1-0	Effluent Gross				1.459	lb/d	lb/d								N
KY0080845	Great Oaks WWTF	McCracken	001-1	11/30/2014	BOD, carbonaceous [5 day,	80082-1-0	Effluent Gross									5	mg/L			mg/L	N
KY0080845	Great Oaks WWTF	McCracken	001-1	11/30/2014	BOD, carbonaceous [5 day,	80082-1-0	Effluent Gross											5	mg/L	mg/L	N
KY0080845	Great Oaks WWTF	McCracken	001-1	10/31/2014	BOD, carbonaceous [5 day,	80082-1-0	Effluent Gross		1.3344	lb/d			lb/d								N
KY0080845	Great Oaks WWTF	McCracken	001-1	10/31/2014	BOD, carbonaceous [5 day,	80082-1-0	Effluent Gross				1.3344	lb/d	lb/d								N
KY0080845	Great Oaks WWTF	McCracken	001-1	10/31/2014	BOD, carbonaceous [5 day,	80082-1-0	Effluent Gross									5	mg/L			mg/L	N
KY0080845	Great Oaks WWTF	McCracken	001-1	10/31/2014	BOD, carbonaceous [5 day,	80082-1-0	Effluent Gross											5	mg/L	mg/L	N

Non-Receipt Vio. Exists	DMR Received Date
N	9/30/2019
N	9/11/2019
Y	
Y	
Y	
Y	
N	5/28/2019
N	3/27/2019
N	2/27/2019
N	2/27/2019
N	12/31/2018
N	12/4/2018
N	11/5/2018
N	10/1/2018
N	8/28/2018
N	8/8/2018
N	6/26/2018
Y	
N	5/28/2018
N	3/26/2018
N	2/28/2018
N	1/11/2018
N	12/20/2017
N	11/28/2017
N	10/28/2017
N	9/27/2017
N	8/28/2017
N	7/26/2017
N	7/26/2017
Y	7/26/2017
N	4/28/2017
N	3/28/2017
Y	8/15/2017
N	1/16/2017
N	1/16/2017
Y	1/16/2017
N	10/29/2016
N	9/28/2016
N	8/27/2016
N	7/26/2016
N	6/28/2016
N	5/24/2016
N	4/28/2016
N	3/29/2016
N	2/10/2016
N	1/28/2016
N	12/28/2015
N	11/28/2015
N	10/28/2015
N	9/26/2015
N	8/13/2015
N	8/6/2015
N	6/26/2015
N	5/28/2015
N	4/12/2015
N	3/26/2015
N	2/18/2015
N	1/27/2015
N	12/26/2014
N	11/28/2014
N	9/30/2019
N	9/11/2019
Y	
Y	
Y	
Y	
N	5/28/2019
N	5/28/2019
N	3/27/2019
N	3/27/2019
N	2/27/2019
N	2/27/2019
N	2/27/2019
N	2/27/2019
N	12/31/2018
N	12/31/2018
N	12/4/2018
N	12/4/2018
N	11/5/2018
N	11/5/2018
N	10/1/2018
N	10/1/2018
N	8/28/2018
N	8/28/2018
N	8/8/2018
N	8/8/2018
N	6/26/2018
N	6/26/2018
Y	
N	5/28/2018
N	5/28/2018
N	3/26/2018
N	3/26/2018
N	2/28/2018
N	2/28/2018
N	1/11/2018
N	1/11/2018
N	12/20/2017
N	12/20/2017
N	11/28/2017
N	11/28/2017
N	10/28/2017
N	10/28/2017
N	9/27/2017
N	9/27/2017
N	8/28/2017
N	8/28/2017
N	7/26/2017
N	7/26/2017
N	7/26/2017
N	7/26/2017

Y	7/26/2017
Y	7/26/2017
N	4/28/2017
N	4/28/2017
N	3/28/2017
N	3/28/2017
Y	8/15/2017
Y	8/15/2017
N	1/16/2017
N	1/16/2017
N	1/16/2017
N	1/16/2017
Y	1/16/2017
Y	1/16/2017
N	10/29/2016
N	10/29/2016
N	9/28/2016
N	9/28/2016
N	8/27/2016
N	8/27/2016
N	7/26/2016
N	7/26/2016
N	6/28/2016
N	6/28/2016
N	5/24/2016
N	5/24/2016
N	4/28/2016
N	4/28/2016
N	3/29/2016
N	3/29/2016
N	2/10/2016
N	2/10/2016
N	1/28/2016
N	1/28/2016
N	12/28/2015
N	12/28/2015
N	11/28/2015
N	11/28/2015
N	10/28/2015
N	10/28/2015
N	9/26/2015
N	9/26/2015
N	8/13/2015
N	8/13/2015
N	8/6/2015
N	8/6/2015
N	6/26/2015
N	6/26/2015
N	5/28/2015
N	5/28/2015
N	4/12/2015
N	4/12/2015
N	3/26/2015
N	3/26/2015
N	2/18/2015
N	2/18/2015
N	1/27/2015
N	1/27/2015
N	12/26/2014
N	12/26/2014
N	11/28/2014
N	11/28/2014
N	9/30/2019
N	9/30/2019
N	9/11/2019
N	9/11/2019
Y	
Y	
Y	
Y	
Y	
Y	
Y	
Y	
N	5/28/2019
N	5/28/2019
N	5/28/2019
N	5/28/2019
N	3/27/2019
N	3/27/2019
N	3/27/2019
N	3/27/2019
N	2/27/2019
N	2/27/2019
N	2/27/2019
N	2/27/2019
N	2/27/2019
N	2/27/2019
N	2/27/2019
N	2/27/2019
N	12/31/2018
N	12/31/2018
N	12/31/2018
N	12/31/2018
N	12/4/2018
N	12/4/2018
N	12/4/2018
N	12/4/2018
N	11/5/2018
N	11/5/2018
N	11/5/2018
N	11/5/2018
N	10/1/2018
N	10/1/2018
N	10/1/2018
N	10/1/2018
N	8/28/2018
N	8/28/2018
N	8/28/2018
N	8/28/2018
N	8/8/2018
N	8/8/2018
N	8/8/2018
N	8/8/2018

N	6/26/2018
N	6/26/2018
N	6/26/2018
N	6/26/2018
Y	
Y	
N	5/28/2018
N	5/28/2018
N	5/28/2018
N	5/28/2018
N	3/26/2018
N	3/26/2018
N	3/26/2018
N	3/26/2018
N	2/28/2018
N	2/28/2018
N	2/28/2018
N	2/28/2018
N	1/11/2018
N	1/11/2018
N	1/11/2018
N	1/11/2018
N	12/20/2017
N	12/20/2017
N	12/20/2017
N	12/20/2017
N	11/28/2017
N	11/28/2017
N	11/28/2017
N	11/28/2017
N	10/28/2017
N	10/28/2017
N	10/28/2017
N	10/28/2017
N	9/27/2017
N	9/27/2017
N	9/27/2017
N	9/27/2017
N	8/28/2017
N	8/28/2017
N	8/28/2017
N	8/28/2017
N	7/26/2017
N	7/26/2017
N	7/26/2017
N	7/26/2017
N	7/26/2017
N	7/26/2017
N	7/26/2017
N	7/26/2017
Y	7/26/2017
Y	7/26/2017
Y	7/26/2017
Y	7/26/2017
N	4/28/2017
N	4/28/2017
N	4/28/2017
N	4/28/2017
N	3/28/2017
N	4/28/2017
N	4/28/2017
N	4/28/2017
N	3/28/2017
N	3/28/2017
N	3/28/2017
N	3/28/2017
Y	8/15/2017
Y	8/15/2017
Y	8/15/2017
Y	8/15/2017
N	1/16/2017
N	1/16/2017
N	1/16/2017
N	1/16/2017
N	1/16/2017
N	1/16/2017
N	1/16/2017
N	1/16/2017
N	1/16/2017
Y	1/16/2017
Y	1/16/2017
Y	1/16/2017
Y	1/16/2017
N	10/29/2016
N	10/29/2016
N	10/29/2016
N	10/29/2016
N	9/28/2016
N	9/28/2016
N	9/28/2016
N	9/28/2016
N	8/27/2016
N	8/27/2016
N	8/27/2016
N	8/27/2016
N	7/26/2016
N	7/26/2016
N	7/26/2016
N	7/26/2016
N	6/28/2016
N	6/28/2016
N	6/28/2016
N	6/28/2016
N	5/24/2016
N	5/24/2016
N	5/24/2016
N	5/24/2016
N	4/28/2016
N	4/28/2016
N	4/28/2016
N	4/28/2016
N	3/29/2016
N	3/29/2016
N	3/29/2016
N	3/29/2016
N	2/10/2016
N	2/10/2016
N	2/10/2016
N	2/10/2016

N	1/28/2016
N	1/28/2016
N	1/28/2016
N	1/28/2016
N	12/28/2015
N	12/28/2015
N	12/28/2015
N	12/28/2015
N	11/28/2015
N	11/28/2015
N	11/28/2015
N	11/28/2015
N	10/28/2015
N	10/28/2015
N	10/28/2015
N	10/28/2015
N	9/26/2015
N	9/26/2015
N	9/26/2015
N	9/26/2015
N	8/13/2015
N	8/13/2015
N	8/13/2015
N	8/13/2015
N	8/6/2015
N	8/6/2015
N	8/6/2015
N	8/6/2015
N	6/26/2015
N	6/26/2015
N	6/26/2015
N	6/26/2015
N	5/28/2015
N	5/28/2015
N	5/28/2015
N	5/28/2015
N	4/12/2015
N	4/12/2015
N	4/12/2015
N	4/12/2015
N	3/26/2015
N	3/26/2015
N	3/26/2015
N	3/26/2015
N	2/18/2015
N	2/18/2015
N	2/18/2015
N	2/18/2015
N	1/27/2015
N	1/27/2015
N	1/27/2015
N	1/27/2015
N	12/26/2014
N	12/26/2014
N	12/26/2014
N	12/26/2014
N	11/28/2014
N	11/28/2014
N	11/28/2014
N	11/28/2014
N	11/28/2014
N	11/28/2014
N	9/30/2019
N	9/30/2019
N	9/11/2019
N	9/11/2019
Y	
Y	
Y	
Y	
Y	
Y	
N	12/4/2018
N	12/4/2018
N	12/4/2018
N	12/4/2018
N	11/5/2018
N	11/5/2018
N	11/5/2018
N	11/5/2018
N	10/1/2018
N	10/1/2018
N	10/1/2018
N	10/1/2018
N	8/28/2018
N	8/28/2018
N	8/28/2018
N	8/28/2018
N	8/8/2018
N	8/8/2018
N	8/8/2018
N	8/8/2018
N	6/26/2018
N	6/26/2018
N	6/26/2018
N	6/26/2018
N	11/28/2017
N	11/28/2017
N	11/28/2017
N	11/28/2017
N	10/28/2017
N	10/28/2017
N	10/28/2017
N	10/28/2017
N	9/27/2017
N	9/27/2017
N	9/27/2017
N	9/27/2017
N	8/28/2017
N	8/28/2017
N	8/28/2017
N	8/28/2017
N	7/26/2017
N	7/26/2017
N	7/26/2017
N	7/26/2017

N	7/26/2017
N	7/26/2017
N	7/26/2017
N	7/26/2017
Y	1/16/2017
Y	1/16/2017
Y	1/16/2017
Y	1/16/2017
N	10/29/2016
N	10/29/2016
N	10/29/2016
N	10/29/2016
N	9/28/2016
N	9/28/2016
N	9/28/2016
N	9/28/2016
N	8/27/2016
N	8/27/2016
N	8/27/2016
N	8/27/2016
N	7/26/2016
N	7/26/2016
N	7/26/2016
N	7/26/2016
N	6/28/2016
N	6/28/2016
N	6/28/2016
N	6/28/2016
N	11/28/2015
N	11/28/2015
N	11/28/2015
N	11/28/2015
N	10/28/2015
N	10/28/2015
N	10/28/2015
N	10/28/2015
N	9/26/2015
N	9/26/2015
N	9/26/2015
N	9/26/2015
N	8/13/2015
N	8/13/2015
N	8/13/2015
N	8/13/2015
N	8/6/2015
N	8/6/2015
N	8/6/2015
N	8/6/2015
N	6/26/2015
N	6/26/2015
N	6/26/2015
N	6/26/2015
N	11/28/2014
N	11/28/2014
N	11/28/2014
N	11/28/2014
Y	
Y	
N	5/28/2019
N	5/28/2019
N	5/28/2019
N	5/28/2019
N	3/27/2019
N	3/27/2019
N	3/27/2019
N	3/27/2019
N	2/27/2019
N	2/27/2019
N	2/27/2019
N	2/27/2019
N	2/27/2019
N	2/27/2019
N	2/27/2019
N	2/27/2019
N	12/31/2018
N	12/31/2018
N	12/31/2018
N	12/31/2018
Y	
Y	
N	5/28/2018
N	5/28/2018
N	5/28/2018
N	5/28/2018
N	3/26/2018
N	3/26/2018
N	3/26/2018
N	3/26/2018
N	2/28/2018
N	2/28/2018
N	2/28/2018
N	2/28/2018
N	1/11/2018
N	1/11/2018
N	1/11/2018
N	1/11/2018
N	12/20/2017
N	12/20/2017
N	12/20/2017
N	12/20/2017
Y	7/26/2017
Y	7/26/2017
Y	7/26/2017
Y	7/26/2017
N	4/28/2017
N	4/28/2017
N	4/28/2017
N	4/28/2017
N	3/28/2017
N	3/28/2017
N	3/28/2017
N	3/28/2017
Y	8/15/2017
Y	8/15/2017

Y	8/15/2017
Y	8/15/2017
N	1/16/2017
N	1/16/2017
N	1/16/2017
N	1/16/2017
N	1/16/2017
N	1/16/2017
N	1/16/2017
N	1/16/2017
N	5/24/2016
N	5/24/2016
N	5/24/2016
N	5/24/2016
N	4/28/2016
N	4/28/2016
N	4/28/2016
N	4/28/2016
N	3/29/2016
N	3/29/2016
N	3/29/2016
N	3/29/2016
N	2/10/2016
N	2/10/2016
N	2/10/2016
N	2/10/2016
N	1/28/2016
N	1/28/2016
N	1/28/2016
N	1/28/2016
N	12/28/2015
N	12/28/2015
N	12/28/2015
N	12/28/2015
N	5/28/2015
N	5/28/2015
N	5/28/2015
N	5/28/2015
N	4/12/2015
N	4/12/2015
N	4/12/2015
N	4/12/2015
N	3/26/2015
N	3/26/2015
N	3/26/2015
N	3/26/2015
N	2/18/2015
N	2/18/2015
N	2/18/2015
N	2/18/2015
N	1/27/2015
N	1/27/2015
N	1/27/2015
N	1/27/2015
N	12/26/2014
N	12/26/2014
N	12/26/2014
N	12/26/2014
N	12/26/2014
N	12/26/2014
N	9/30/2019
N	9/11/2019
Y	
Y	
Y	
Y	
N	5/28/2019
N	5/28/2019
N	3/27/2019
N	3/27/2019
N	2/27/2019
N	2/27/2019
N	2/27/2019
N	2/27/2019
N	12/31/2018
N	12/31/2018
N	12/4/2018
N	12/4/2018
N	11/5/2018
N	11/5/2018
N	10/1/2018
N	10/1/2018
N	8/28/2018
N	8/28/2018
N	8/8/2018
N	8/8/2018
N	6/26/2018
N	6/26/2018
Y	
N	5/28/2018
N	5/28/2018
N	3/26/2018
N	3/26/2018
N	2/28/2018
N	2/28/2018
N	1/11/2018
N	1/11/2018
N	12/20/2017
N	12/20/2017
N	11/28/2017
N	11/28/2017
N	10/28/2017
N	10/28/2017
N	9/27/2017
N	9/27/2017
N	8/28/2017
N	8/28/2017
N	7/26/2017
N	7/26/2017
N	7/26/2017
N	7/26/2017
Y	7/26/2017
Y	7/26/2017
N	4/28/2017
N	4/28/2017
N	3/28/2017

N	3/28/2017
Y	8/15/2017
Y	8/15/2017
N	1/16/2017
N	1/16/2017
N	1/16/2017
N	1/16/2017
Y	1/16/2017
Y	1/16/2017
N	10/29/2016
N	10/29/2016
N	9/28/2016
N	9/28/2016
N	8/27/2016
N	8/27/2016
N	7/26/2016
N	7/26/2016
N	6/28/2016
N	6/28/2016
N	5/24/2016
N	5/24/2016
N	4/28/2016
N	4/28/2016
N	3/29/2016
N	3/29/2016
N	2/10/2016
N	2/10/2016
N	1/28/2016
N	1/28/2016
N	12/28/2015
N	12/28/2015
N	11/28/2015
N	11/28/2015
N	10/28/2015
N	10/28/2015
N	9/26/2015
N	9/26/2015
N	8/13/2015
N	8/13/2015
N	8/6/2015
N	8/6/2015
N	6/26/2015
N	6/26/2015
N	5/28/2015
N	5/28/2015
N	4/12/2015
N	4/12/2015
N	3/26/2015
N	3/26/2015
N	2/18/2015
N	2/18/2015
N	1/27/2015
N	1/27/2015
N	12/26/2014
N	12/26/2014
N	11/28/2014
N	11/28/2014
N	9/30/2019
N	9/11/2019
Y	
Y	
Y	
Y	
N	5/28/2019
N	5/28/2019
N	3/27/2019
N	3/27/2019
N	2/27/2019
N	2/27/2019
N	2/27/2019
N	2/27/2019
N	12/31/2018
N	12/31/2018
N	12/4/2018
N	12/4/2018
N	11/5/2018
N	11/5/2018
N	10/1/2018
N	10/1/2018
N	8/28/2018
N	8/28/2018
N	8/8/2018
N	8/8/2018
N	6/26/2018
N	6/26/2018
Y	
N	5/28/2018
N	5/28/2018
N	3/26/2018
N	3/26/2018
N	2/28/2018
N	2/28/2018
N	1/11/2018
N	1/11/2018
N	12/20/2017
N	12/20/2017
N	11/28/2017
N	11/28/2017
N	10/28/2017
N	10/28/2017
N	9/27/2017
N	9/27/2017
N	8/28/2017
N	8/28/2017
N	7/26/2017
N	7/26/2017
N	7/26/2017
N	7/26/2017
Y	7/26/2017
Y	7/26/2017
N	4/28/2017
N	4/28/2017
N	3/28/2017
N	3/28/2017

Y	8/15/2017
Y	8/15/2017
N	1/16/2017
N	1/16/2017
N	1/16/2017
N	1/16/2017
Y	1/16/2017
Y	1/16/2017
N	10/29/2016
N	10/29/2016
N	9/28/2016
N	9/28/2016
N	8/27/2016
N	8/27/2016
N	7/26/2016
N	7/26/2016
N	6/28/2016
N	6/28/2016
N	5/24/2016
N	5/24/2016
N	4/28/2016
N	4/28/2016
N	3/29/2016
N	3/29/2016
N	2/10/2016
N	2/10/2016
N	1/28/2016
N	1/28/2016
N	12/28/2015
N	12/28/2015
N	11/28/2015
N	11/28/2015
N	10/28/2015
N	10/28/2015
N	9/26/2015
N	9/26/2015
N	8/13/2015
N	8/13/2015
N	8/6/2015
N	8/6/2015
N	6/26/2015
N	6/26/2015
N	5/28/2015
N	5/28/2015
N	4/12/2015
N	4/12/2015
N	3/26/2015
N	3/26/2015
N	2/18/2015
N	2/18/2015
N	1/27/2015
N	1/27/2015
N	12/26/2014
N	12/26/2014
N	11/28/2014
N	11/28/2014
N	9/30/2019
N	9/11/2019
Y	
Y	
Y	
Y	
N	5/28/2019
N	5/28/2019
N	3/27/2019
N	3/27/2019
N	2/27/2019
N	2/27/2019
N	2/27/2019
N	2/27/2019
N	12/31/2018
N	12/31/2018
N	12/4/2018
N	12/4/2018
N	11/5/2018
N	11/5/2018
N	10/1/2018
N	10/1/2018
N	8/28/2018
N	8/28/2018
N	8/8/2018
N	8/8/2018
N	6/26/2018
N	6/26/2018
Y	
N	5/28/2018
N	5/28/2018
N	3/26/2018
N	3/26/2018
N	2/28/2018
N	2/28/2018
N	1/11/2018
N	1/11/2018
N	12/20/2017
N	12/20/2017
N	11/28/2017
N	11/28/2017
N	10/28/2017
N	10/28/2017
N	9/27/2017
N	9/27/2017
N	8/28/2017
N	8/28/2017
N	7/26/2017
N	7/26/2017
N	7/26/2017
N	7/26/2017
Y	7/26/2017
Y	7/26/2017
N	4/28/2017
N	4/28/2017
N	3/28/2017
N	3/28/2017
Y	8/15/2017

Y	8/15/2017
N	1/16/2017
N	1/16/2017
N	1/16/2017
N	1/16/2017
Y	1/16/2017
Y	1/16/2017
N	10/29/2016
N	10/29/2016
N	9/28/2016
N	9/28/2016
N	8/27/2016
N	8/27/2016
N	7/26/2016
N	7/26/2016
N	6/28/2016
N	6/28/2016
N	5/24/2016
N	5/24/2016
N	4/28/2016
N	4/28/2016
N	3/29/2016
N	3/29/2016
N	2/10/2016
N	2/10/2016
N	1/28/2016
N	1/28/2016
N	12/28/2015
N	12/28/2015
N	11/28/2015
N	11/28/2015
N	10/28/2015
N	10/28/2015
N	9/26/2015
N	9/26/2015
N	8/13/2015
N	8/13/2015
N	8/6/2015
N	8/6/2015
N	6/26/2015
N	6/26/2015
N	5/28/2015
N	5/28/2015
N	4/12/2015
N	4/12/2015
N	3/26/2015
N	3/26/2015
N	2/18/2015
N	2/18/2015
N	1/27/2015
N	1/27/2015
N	12/26/2014
N	12/26/2014
N	11/28/2014
N	11/28/2014
N	9/30/2019
N	9/30/2019
N	9/11/2019
N	9/11/2019
N	9/30/2019
N	9/30/2019
N	9/11/2019
N	9/11/2019
Y	
Y	
Y	
Y	
Y	
Y	
Y	
Y	
N	5/28/2019
N	5/28/2019
N	5/28/2019
N	5/28/2019
N	3/27/2019
N	3/27/2019
N	3/27/2019
N	3/27/2019
N	2/27/2019
N	2/27/2019
N	2/27/2019
N	2/27/2019
N	2/27/2019
N	2/27/2019
N	2/27/2019
N	2/27/2019
N	12/31/2018
N	12/31/2018
N	12/31/2018
N	12/31/2018
N	12/4/2018
N	12/4/2018
N	12/4/2018
N	12/4/2018
N	11/5/2018
N	11/5/2018
N	11/5/2018
N	11/5/2018
N	10/1/2018
N	10/1/2018
N	10/1/2018
N	10/1/2018
N	8/28/2018
N	8/28/2018
N	8/28/2018
N	8/28/2018
N	8/8/2018
N	8/8/2018
N	8/8/2018
N	8/8/2018
N	6/26/2018
N	6/26/2018
N	6/26/2018
N	6/26/2018
Y	
Y	
N	5/28/2018

N	5/28/2018
N	5/28/2018
N	5/28/2018
N	3/26/2018
N	3/26/2018
N	3/26/2018
N	3/26/2018
N	2/28/2018
N	2/28/2018
N	2/28/2018
N	2/28/2018
N	1/11/2018
N	1/11/2018
N	1/11/2018
N	1/11/2018
N	12/20/2017
N	12/20/2017
N	12/20/2017
N	12/20/2017
N	11/28/2017
N	11/28/2017
N	11/28/2017
N	11/28/2017
N	10/28/2017
N	10/28/2017
N	10/28/2017
N	10/28/2017
N	9/27/2017
N	9/27/2017
N	9/27/2017
N	9/27/2017
N	8/28/2017
N	8/28/2017
N	8/28/2017
N	8/28/2017
N	7/26/2017
N	7/26/2017
N	7/26/2017
N	7/26/2017
N	7/26/2017
N	7/26/2017
N	7/26/2017
N	7/26/2017
Y	7/26/2017
Y	7/26/2017
Y	7/26/2017
Y	7/26/2017
N	4/28/2017
N	4/28/2017
N	4/28/2017
N	4/28/2017
N	3/28/2017
N	3/28/2017
N	3/28/2017
N	3/28/2017
Y	8/15/2017
Y	8/15/2017
Y	8/15/2017
Y	8/15/2017
Y	8/15/2017
N	1/16/2017
N	1/16/2017
N	1/16/2017
N	1/16/2017
N	1/16/2017
N	1/16/2017
N	1/16/2017
N	1/16/2017
N	1/16/2017
Y	1/16/2017
Y	1/16/2017
Y	1/16/2017
Y	1/16/2017
N	10/29/2016
N	10/29/2016
N	10/29/2016
N	10/29/2016
N	9/28/2016
N	9/28/2016
N	9/28/2016
N	9/28/2016
N	8/27/2016
N	8/27/2016
N	8/27/2016
N	8/27/2016
N	7/26/2016
N	7/26/2016
N	7/26/2016
N	7/26/2016
N	6/28/2016
N	6/28/2016
N	6/28/2016
N	6/28/2016
N	5/24/2016
N	5/24/2016
N	5/24/2016
N	5/24/2016
N	4/28/2016
N	4/28/2016
N	4/28/2016
N	4/28/2016
N	3/29/2016
N	3/29/2016
N	3/29/2016
N	3/29/2016
N	2/10/2016
N	2/10/2016
N	2/10/2016
N	2/10/2016
N	1/28/2016
N	1/28/2016
N	1/28/2016
N	1/28/2016
N	12/28/2015
N	12/28/2015
N	12/28/2015

N	12/28/2015
N	11/28/2015
N	11/28/2015
N	11/28/2015
N	11/28/2015
N	10/28/2015
N	10/28/2015
N	10/28/2015
N	10/28/2015
N	9/26/2015
N	9/26/2015
N	9/26/2015
N	9/26/2015
N	8/13/2015
N	8/13/2015
N	8/13/2015
N	8/13/2015
N	8/6/2015
N	8/6/2015
N	8/6/2015
N	8/6/2015
N	6/26/2015
N	6/26/2015
N	6/26/2015
N	6/26/2015
N	5/28/2015
N	5/28/2015
N	5/28/2015
N	5/28/2015
N	4/12/2015
N	4/12/2015
N	4/12/2015
N	4/12/2015
N	3/26/2015
N	3/26/2015
N	3/26/2015
N	3/26/2015
N	2/18/2015
N	2/18/2015
N	2/18/2015
N	2/18/2015
N	1/27/2015
N	1/27/2015
N	1/27/2015
N	1/27/2015
N	12/26/2014
N	12/26/2014
N	12/26/2014
N	12/26/2014
N	11/28/2014
N	11/28/2014
N	11/28/2014
N	11/28/2014

KEY | **<???** | **NODI B**

NPDES ID	Permit Name	County Name	Perm Feature ID-Limit Set	Mon. Period End Date	Parameter Desc	Param Cd - MLC - Season ID	Monitoring Location Desc	Worst % exced.	Quantity 1	Q1 DMR Value Unit Short Desc	Quantity 2	Q2 DMR Value Unit Short Desc	Limit Value - Quantity Units	Concentration 1	C1 DMR Value Unit Short Desc	Concentration 2	C2 DMR Value Unit Short Desc	Concentration 3	C3 DMR Value Unit Short Desc	Limit Value - Concentration Units
KY0083755	Timberland Subdivision WWTP	McCracken	001-1	02/28/2021	Oxygen, dissolved [DO]	00300-1-0	Effluent Gross							11.4	mg/L					mg/L
KY0083755	Timberland Subdivision WWTP	McCracken	001-1	01/31/2021	Oxygen, dissolved [DO]	00300-1-0	Effluent Gross							12	mg/L					mg/L
KY0083755	Timberland Subdivision WWTP	McCracken	001-1	12/31/2020	Oxygen, dissolved [DO]	00300-1-0	Effluent Gross	13						6.1	mg/L					mg/L
KY0083755	Timberland Subdivision WWTP	McCracken	001-1	11/30/2020	Oxygen, dissolved [DO]	00300-1-0	Effluent Gross							8.71	mg/L					mg/L
KY0083755	Timberland Subdivision WWTP	McCracken	001-1	10/31/2020	Oxygen, dissolved [DO]	00300-1-0	Effluent Gross							7.41	mg/L					mg/L
KY0083755	Timberland Subdivision WWTP	McCracken	001-1	09/30/2020	Oxygen, dissolved [DO]	00300-1-0	Effluent Gross	11						6.26	mg/L					mg/L
KY0083755	Timberland Subdivision WWTP	McCracken	001-1	08/31/2020	Oxygen, dissolved [DO]	00300-1-0	Effluent Gross	8						6.43	mg/L					mg/L
KY0083755	Timberland Subdivision WWTP	McCracken	001-1	07/31/2020	Oxygen, dissolved [DO]	00300-1-0	Effluent Gross	10						6.3	mg/L					mg/L
KY0083755	Timberland Subdivision WWTP	McCracken	001-1	06/30/2020	Oxygen, dissolved [DO]	00300-1-0	Effluent Gross	3						6.8	mg/L					mg/L
KY0083755	Timberland Subdivision WWTP	McCracken	001-1	05/31/2020	Oxygen, dissolved [DO]	00300-1-0	Effluent Gross	14						6.02	mg/L					mg/L
KY0083755	Timberland Subdivision WWTP	McCracken	001-1	04/30/2020	Oxygen, dissolved [DO]	00300-1-0	Effluent Gross							7.7	mg/L					mg/L
KY0083755	Timberland Subdivision WWTP	McCracken	001-1	03/31/2020	Oxygen, dissolved [DO]	00300-1-0	Effluent Gross							7.4	mg/L					mg/L
KY0083755	Timberland Subdivision WWTP	McCracken	001-1	02/29/2020	Oxygen, dissolved [DO]	00300-1-0	Effluent Gross							7.4	mg/L					mg/L
KY0083755	Timberland Subdivision WWTP	McCracken	001-1	01/31/2020	Oxygen, dissolved [DO]	00300-1-0	Effluent Gross							7.6	mg/L					mg/L
KY0083755	Timberland Subdivision WWTP	McCracken	001-1	12/31/2019	Oxygen, dissolved [DO]	00300-1-0	Effluent Gross							8.2	mg/L					mg/L
KY0083755	Timberland Subdivision WWTP	McCracken	001-1	11/30/2019	Oxygen, dissolved [DO]	00300-1-0	Effluent Gross							7.2	mg/L					mg/L
KY0083755	Timberland Subdivision WWTP	McCracken	001-1	10/31/2019	Oxygen, dissolved [DO]	00300-1-0	Effluent Gross							7.2	mg/L					mg/L
KY0083755	Timberland Subdivision WWTP	McCracken	001-1	09/30/2019	Oxygen, dissolved [DO]	00300-1-0	Effluent Gross							7.4	mg/L					mg/L
KY0083755	Timberland Subdivision WWTP	McCracken	001-1	08/31/2019	Oxygen, dissolved [DO]	00300-1-0	Effluent Gross							7.1	mg/L					mg/L
KY0083755	Timberland Subdivision WWTP	McCracken	001-1	07/31/2019	Oxygen, dissolved [DO]	00300-1-0	Effluent Gross							7.2	mg/L					mg/L
KY0083755	Timberland Subdivision WWTP	McCracken	001-1	06/30/2019	Oxygen, dissolved [DO]	00300-1-0	Effluent Gross							7.2	mg/L					mg/L
KY0083755	Timberland Subdivision WWTP	McCracken	001-1	05/31/2019	Oxygen, dissolved [DO]	00300-1-0	Effluent Gross							7.4	mg/L					mg/L
KY0083755	Timberland Subdivision WWTP	McCracken	001-1	04/30/2019	Oxygen, dissolved [DO]	00300-1-0	Effluent Gross							7.4	mg/L					mg/L
KY0083755	Timberland Subdivision WWTP	McCracken	001-1	03/31/2019	Oxygen, dissolved [DO]	00300-1-0	Effluent Gross							7.4	mg/L					mg/L
KY0083755	Timberland Subdivision WWTP	McCracken	001-1	02/28/2019	Oxygen, dissolved [DO]	00300-1-0	Effluent Gross							7.6	mg/L					mg/L
KY0083755	Timberland Subdivision WWTP	McCracken	001-1	01/31/2019	Oxygen, dissolved [DO]	00300-1-0	Effluent Gross							7.5	mg/L					mg/L
KY0083755	Timberland Subdivision WWTP	McCracken	001-1	12/31/2018	Oxygen, dissolved [DO]	00300-1-0	Effluent Gross							7.4	mg/L					mg/L
KY0083755	Timberland Subdivision WWTP	McCracken	001-1	11/30/2018	Oxygen, dissolved [DO]	00300-1-0	Effluent Gross							7.2	mg/L					mg/L
KY0083755	Timberland Subdivision WWTP	McCracken	001-1	10/31/2018	Oxygen, dissolved [DO]	00300-1-0	Effluent Gross							7.1	mg/L					mg/L
KY0083755	Timberland Subdivision WWTP	McCracken	001-1	09/30/2018	Oxygen, dissolved [DO]	00300-1-0	Effluent Gross							7.2	mg/L					mg/L
KY0083755	Timberland Subdivision WWTP	McCracken	001-1	08/31/2018	Oxygen, dissolved [DO]	00300-1-0	Effluent Gross							7.2	mg/L					mg/L
KY0083755	Timberland Subdivision WWTP	McCracken	001-1	07/31/2018	Oxygen, dissolved [DO]	00300-1-0	Effluent Gross							7.1	mg/L					mg/L
KY0083755	Timberland Subdivision WWTP	McCracken	001-1	06/30/2018	Oxygen, dissolved [DO]	00300-1-0	Effluent Gross							7.3	mg/L					mg/L
KY0083755	Timberland Subdivision WWTP	McCracken	001-1	05/31/2018	Oxygen, dissolved [DO]	00300-1-0	Effluent Gross							7.4	mg/L					mg/L
KY0083755	Timberland Subdivision WWTP	McCracken	001-1	04/30/2018	Oxygen, dissolved [DO]	00300-1-0	Effluent Gross							7.6	mg/L					mg/L
KY0083755	Timberland Subdivision WWTP	McCracken	001-1	03/31/2018	Oxygen, dissolved [DO]	00300-1-0	Effluent Gross							7.6	mg/L					mg/L
KY0083755	Timberland Subdivision WWTP	McCracken	001-1	02/28/2018	Oxygen, dissolved [DO]	00300-1-0	Effluent Gross							7.5	mg/L					mg/L
KY0083755	Timberland Subdivision WWTP	McCracken	001-1	01/31/2018	Oxygen, dissolved [DO]	00300-1-0	Effluent Gross							7.3	mg/L					mg/L
KY0083755	Timberland Subdivision WWTP	McCracken	001-1	12/31/2017	Oxygen, dissolved [DO]	00300-1-0	Effluent Gross							7.4	mg/L					mg/L
KY0083755	Timberland Subdivision WWTP	McCracken	001-1	11/30/2017	Oxygen, dissolved [DO]	00300-1-0	Effluent Gross							7.2	mg/L					mg/L
KY0083755	Timberland Subdivision WWTP	McCracken	001-1	10/31/2017	Oxygen, dissolved [DO]	00300-1-0	Effluent Gross							7.2	mg/L					mg/L
KY0083755	Timberland Subdivision WWTP	McCracken	001-1	09/30/2017	Oxygen, dissolved [DO]	00300-1-0	Effluent Gross							7.2	mg/L					mg/L
KY0083755	Timberland Subdivision WWTP	McCracken	001-1	08/31/2017	Oxygen, dissolved [DO]	00300-1-0	Effluent Gross							7	mg/L					mg/L
KY0083755	Timberland Subdivision WWTP	McCracken	001-1	07/31/2017	Oxygen, dissolved [DO]	00300-1-0	Effluent Gross							7	mg/L					mg/L
KY0083755	Timberland Subdivision WWTP	McCracken	001-1	06/30/2017	Oxygen, dissolved [DO]	00300-1-0	Effluent Gross							7.1	mg/L					mg/L
KY0083755	Timberland Subdivision WWTP	McCracken	001-1	05/31/2017	Oxygen, dissolved [DO]	00300-1-0	Effluent Gross							7.4	mg/L					mg/L
KY0083755	Timberland Subdivision WWTP	McCracken	001-1	04/30/2017	Oxygen, dissolved [DO]	00300-1-0	Effluent Gross							7.2	mg/L					mg/L
KY0083755	Timberland Subdivision WWTP	McCracken	001-1	03/31/2017	Oxygen, dissolved [DO]	00300-1-0	Effluent Gross							7.2	mg/L					mg/L
KY0083755	Timberland Subdivision WWTP	McCracken	001-1	02/28/2017	Oxygen, dissolved [DO]	00300-1-0	Effluent Gross							7.4	mg/L					mg/L
KY0083755	Timberland Subdivision WWTP	McCracken	001-1	01/31/2017	Oxygen, dissolved [DO]	00300-1-0	Effluent Gross							7.5	mg/L					mg/L
KY0083755	Timberland Subdivision WWTP	McCracken	001-1	12/31/2016	Oxygen, dissolved [DO]	00300-1-0	Effluent Gross							8.1	mg/L					mg/L
KY0083755	Timberland Subdivision WWTP	McCracken	001-1	11/30/2016	Oxygen, dissolved [DO]	00300-1-0	Effluent Gross							7.1	mg/L					mg/L
KY0083755	Timberland Subdivision WWTP	McCracken	001-1	10/31/2016	Oxygen, dissolved [DO]	00300-1-0	Effluent Gross							7.6	mg/L					mg/L
KY0083755	Timberland Subdivision WWTP	McCracken	001-1	09/30/2016	Oxygen, dissolved [DO]	00300-1-0	Effluent Gross							7.2	mg/L					mg/L
KY0083755	Timberland Subdivision WWTP	McCracken	001-1	08/31/2016	Oxygen, dissolved [DO]	00300-1-0	Effluent Gross							7.4	mg/L					mg/L
KY0083755	Timberland Subdivision WWTP	McCracken	001-1	07/31/2016	Oxygen, dissolved [DO]	00300-1-0	Effluent Gross							7.1	mg/L					mg/L
KY0083755	Timberland Subdivision WWTP	McCracken	001-1	06/30/2016	Oxygen, dissolved [DO]	00300-1-0	Effluent Gross							7.4	mg/L					mg/L
KY0083755	Timberland Subdivision WWTP	McCracken	001-1	05/31/2016	Oxygen, dissolved [DO]	00300-1-0	Effluent Gross							7.4	mg/L					mg/L
KY0083755	Timberland Subdivision WWTP	McCracken	001-1	04/30/2016	Oxygen, dissolved [DO]	00300-1-0	Effluent Gross							7.2	mg/L					mg/L
KY0083755	Timberland Subdivision WWTP	McCracken	001-1	03/31/2016	Oxygen, dissolved [DO]	00300-1-0	Effluent Gross							7.2	mg/L					mg/L
KY0083755	Timberland Subdivision WWTP	McCracken	001-1	02/29/2016	Oxygen, dissolved [DO]	00300-1-0	Effluent Gross							7.9	mg/L					mg/L
KY0083755	Timberland Subdivision WWTP	McCracken	001-1	02/28/2021	pH	00400-1-0	Effluent Gross							7.3	SU					SU
KY0083755	Timberland Subdivision WWTP	McCracken	001-1	02/28/2021	pH	00400-1-0	Effluent Gross											7.3	SU	SU
KY0083755	Timberland Subdivision WWTP	McCracken	001-1	01/31/2021	pH	00400-1-0	Effluent Gross							6.87	SU					SU
KY0083755	Timberland Subdivision WWTP	McCracken	001-1	01/31/2021	pH	00400-1-0	Effluent Gross											6.87	SU	SU
KY0083755	Timberland Subdivision WWTP	McCracken	001-1	12/31/2020	pH	00400-1-0	Effluent Gross							6.89	SU					SU
KY0083755	Timberland Subdivision WWTP	McCracken	001-1	12/31/2020	pH	00400-1-0	Effluent Gross											6.89	SU	SU
KY0083755	Timberland Subdivision WWTP	McCracken	001-1	11/30/2020	pH	00400-1-0	Effluent Gross							7.11	SU					SU
KY0083755	Timberland Subdivision WWTP	McCracken	001-1	11/30/2020	pH	00400-1-0	Effluent Gross											7.11	SU	SU
KY0083755	Timberland Subdivision WWTP	McCracken	001-1	10/31/2020	pH	00400-1-0	Effluent Gross							6.98	SU					SU
KY0083755	Timberland Subdivision WWTP	McCracken	001-1	10/31/2020	pH	00400-1-0	Effluent Gross											6.98	SU	SU
KY0083755	Timberland Subdivision WWTP	McCracken	001-1	09/30/2020	pH	00400-1-0	Effluent Gross							7.17	SU					SU
KY0083755	Timberland Subdivision WWTP	McCracken	001-1	09/30/2020	pH	00400-1-0	Effluent Gross											7.33	SU	SU
KY0083755	Timberland Subdivision WWTP	McCracken	001-1	08/31/2020	pH	00400-1-0	Effluent Gross							7.63	SU					SU
KY0083755	Timberland Subdivision WWTP	McCracken	001-1	08/31/2020	pH	00400-1-0	Effluent Gross											7.73	SU	SU
KY0083755	Timberland Subdivision WWTP	McCracken	001-1	07/31/2020	pH	00400-1-0	Effluent Gross							7.79	SU					SU
KY0083755	Timberland Subdivision WWTP	McCracken	001-1	07/31/2020	pH	00400-1-0	Effluent Gross											7.79	SU	SU
KY0083755	Timberland Subdivision WWTP	McCracken	001-1	06/30/2020	pH	00400-1-0	Effluent Gross							7.1	SU					SU
KY0083755	Timberland Subdivision WWTP	McCracken	001-1	06/30/2020	pH	00400-1-0	Effluent Gross											7.1	SU	SU
KY0083755	Timberland Subdivision WWTP	McCracken	001-1	05/31/2020	pH	00400-1-0	Effluent Gross							6.96	SU					SU
KY0083755	Timberland Subdivision WWTP	McCracken	001-1	05/31/2020	pH	00400-1-0	Effluent Gross											6.96	SU	SU
KY0083755	Timberland Subdivision WWTP	McCracken	001-1	04/30/2020	pH	00400-1-0	Effluent Gross							7.34	SU					SU

KY0083755	Timberland Subdivision WWTP	McCracken	001-1	04/30/2020	pH	00400-1-0	Effluent Gross											7.34	SU	SU
KY0083755	Timberland Subdivision WWTP	McCracken	001-1	03/31/2020	pH	00400-1-0	Effluent Gross							7.1	SU					SU
KY0083755	Timberland Subdivision WWTP	McCracken	001-1	03/31/2020	pH	00400-1-0	Effluent Gross											7.1	SU	SU
KY0083755	Timberland Subdivision WWTP	McCracken	001-1	02/29/2020	pH	00400-1-0	Effluent Gross							7.1	SU					SU
KY0083755	Timberland Subdivision WWTP	McCracken	001-1	02/29/2020	pH	00400-1-0	Effluent Gross											7.1	SU	SU
KY0083755	Timberland Subdivision WWTP	McCracken	001-1	01/31/2020	pH	00400-1-0	Effluent Gross							7.2	SU					SU
KY0083755	Timberland Subdivision WWTP	McCracken	001-1	01/31/2020	pH	00400-1-0	Effluent Gross											7.2	SU	SU
KY0083755	Timberland Subdivision WWTP	McCracken	001-1	12/31/2019	pH	00400-1-0	Effluent Gross							7.2	SU					SU
KY0083755	Timberland Subdivision WWTP	McCracken	001-1	12/31/2019	pH	00400-1-0	Effluent Gross											7.2	SU	SU
KY0083755	Timberland Subdivision WWTP	McCracken	001-1	11/30/2019	pH	00400-1-0	Effluent Gross							7.5	SU					SU
KY0083755	Timberland Subdivision WWTP	McCracken	001-1	11/30/2019	pH	00400-1-0	Effluent Gross											7.5	SU	SU
KY0083755	Timberland Subdivision WWTP	McCracken	001-1	10/31/2019	pH	00400-1-0	Effluent Gross							7.3	SU					SU
KY0083755	Timberland Subdivision WWTP	McCracken	001-1	10/31/2019	pH	00400-1-0	Effluent Gross											7.3	SU	SU
KY0083755	Timberland Subdivision WWTP	McCracken	001-1	09/30/2019	pH	00400-1-0	Effluent Gross							7.2	SU					SU
KY0083755	Timberland Subdivision WWTP	McCracken	001-1	09/30/2019	pH	00400-1-0	Effluent Gross											7.2	SU	SU
KY0083755	Timberland Subdivision WWTP	McCracken	001-1	08/31/2019	pH	00400-1-0	Effluent Gross							7.2	SU					SU
KY0083755	Timberland Subdivision WWTP	McCracken	001-1	08/31/2019	pH	00400-1-0	Effluent Gross											7.2	SU	SU
KY0083755	Timberland Subdivision WWTP	McCracken	001-1	07/31/2019	pH	00400-1-0	Effluent Gross							7.4	SU					SU
KY0083755	Timberland Subdivision WWTP	McCracken	001-1	07/31/2019	pH	00400-1-0	Effluent Gross											7.4	SU	SU
KY0083755	Timberland Subdivision WWTP	McCracken	001-1	06/30/2019	pH	00400-1-0	Effluent Gross							7.2	SU					SU
KY0083755	Timberland Subdivision WWTP	McCracken	001-1	06/30/2019	pH	00400-1-0	Effluent Gross											7.2	SU	SU
KY0083755	Timberland Subdivision WWTP	McCracken	001-1	05/31/2019	pH	00400-1-0	Effluent Gross							7.6	SU					SU
KY0083755	Timberland Subdivision WWTP	McCracken	001-1	05/31/2019	pH	00400-1-0	Effluent Gross											7.6	SU	SU
KY0083755	Timberland Subdivision WWTP	McCracken	001-1	04/30/2019	pH	00400-1-0	Effluent Gross							6.8	SU					SU
KY0083755	Timberland Subdivision WWTP	McCracken	001-1	04/30/2019	pH	00400-1-0	Effluent Gross											6.8	SU	SU
KY0083755	Timberland Subdivision WWTP	McCracken	001-1	03/31/2019	pH	00400-1-0	Effluent Gross							7.2	SU					SU
KY0083755	Timberland Subdivision WWTP	McCracken	001-1	03/31/2019	pH	00400-1-0	Effluent Gross											7.2	SU	SU
KY0083755	Timberland Subdivision WWTP	McCracken	001-1	02/28/2019	pH	00400-1-0	Effluent Gross							7.2	SU					SU
KY0083755	Timberland Subdivision WWTP	McCracken	001-1	02/28/2019	pH	00400-1-0	Effluent Gross											7.2	SU	SU
KY0083755	Timberland Subdivision WWTP	McCracken	001-1	01/31/2019	pH	00400-1-0	Effluent Gross							7.1	SU					SU
KY0083755	Timberland Subdivision WWTP	McCracken	001-1	01/31/2019	pH	00400-1-0	Effluent Gross											7.1	SU	SU
KY0083755	Timberland Subdivision WWTP	McCracken	001-1	12/31/2018	pH	00400-1-0	Effluent Gross							6.9	SU					SU
KY0083755	Timberland Subdivision WWTP	McCracken	001-1	12/31/2018	pH	00400-1-0	Effluent Gross											6.9	SU	SU
KY0083755	Timberland Subdivision WWTP	McCracken	001-1	11/30/2018	pH	00400-1-0	Effluent Gross							7.2	SU					SU
KY0083755	Timberland Subdivision WWTP	McCracken	001-1	11/30/2018	pH	00400-1-0	Effluent Gross											7.2	SU	SU
KY0083755	Timberland Subdivision WWTP	McCracken	001-1	10/31/2018	pH	00400-1-0	Effluent Gross							6.9	SU					SU
KY0083755	Timberland Subdivision WWTP	McCracken	001-1	10/31/2018	pH	00400-1-0	Effluent Gross											6.9	SU	SU
KY0083755	Timberland Subdivision WWTP	McCracken	001-1	09/30/2018	pH	00400-1-0	Effluent Gross							7.2	SU					SU
KY0083755	Timberland Subdivision WWTP	McCracken	001-1	09/30/2018	pH	00400-1-0	Effluent Gross											7.2	SU	SU
KY0083755	Timberland Subdivision WWTP	McCracken	001-1	08/31/2018	pH	00400-1-0	Effluent Gross							7.2	SU					SU
KY0083755	Timberland Subdivision WWTP	McCracken	001-1	08/31/2018	pH	00400-1-0	Effluent Gross											7.2	SU	SU
KY0083755	Timberland Subdivision WWTP	McCracken	001-1	07/31/2018	pH	00400-1-0	Effluent Gross							6.8	SU					SU
KY0083755	Timberland Subdivision WWTP	McCracken	001-1	07/31/2018	pH	00400-1-0	Effluent Gross											6.8	SU	SU
KY0083755	Timberland Subdivision WWTP	McCracken	001-1	06/30/2018	pH	00400-1-0	Effluent Gross							7.2	SU					SU
KY0083755	Timberland Subdivision WWTP	McCracken	001-1	06/30/2018	pH	00400-1-0	Effluent Gross											7.2	SU	SU
KY0083755	Timberland Subdivision WWTP	McCracken	001-1	05/31/2018	pH	00400-1-0	Effluent Gross							7.1	SU					SU
KY0083755	Timberland Subdivision WWTP	McCracken	001-1	05/31/2018	pH	00400-1-0	Effluent Gross											7.1	SU	SU
KY0083755	Timberland Subdivision WWTP	McCracken	001-1	04/30/2018	pH	00400-1-0	Effluent Gross							7.2	SU					SU
KY0083755	Timberland Subdivision WWTP	McCracken	001-1	04/30/2018	pH	00400-1-0	Effluent Gross											7.2	SU	SU
KY0083755	Timberland Subdivision WWTP	McCracken	001-1	03/31/2018	pH	00400-1-0	Effluent Gross							7.1	SU					SU
KY0083755	Timberland Subdivision WWTP	McCracken	001-1	03/31/2018	pH	00400-1-0	Effluent Gross											7.1	SU	SU
KY0083755	Timberland Subdivision WWTP	McCracken	001-1	02/28/2018	pH	00400-1-0	Effluent Gross							7.3	SU					SU
KY0083755	Timberland Subdivision WWTP	McCracken	001-1	02/28/2018	pH	00400-1-0	Effluent Gross											7.3	SU	SU
KY0083755	Timberland Subdivision WWTP	McCracken	001-1	01/31/2018	pH	00400-1-0	Effluent Gross							7.1	SU					SU
KY0083755	Timberland Subdivision WWTP	McCracken	001-1	01/31/2018	pH	00400-1-0	Effluent Gross											7.1	SU	SU
KY0083755	Timberland Subdivision WWTP	McCracken	001-1	12/31/2017	pH	00400-1-0	Effluent Gross							7.2	SU					SU
KY0083755	Timberland Subdivision WWTP	McCracken	001-1	12/31/2017	pH	00400-1-0	Effluent Gross											7.2	SU	SU
KY0083755	Timberland Subdivision WWTP	McCracken	001-1	11/30/2017	pH	00400-1-0	Effluent Gross							7.2	SU					SU
KY0083755	Timberland Subdivision WWTP	McCracken	001-1	11/30/2017	pH	00400-1-0	Effluent Gross											7.2	SU	SU
KY0083755	Timberland Subdivision WWTP	McCracken	001-1	10/31/2017	pH	00400-1-0	Effluent Gross							7	SU					SU
KY0083755	Timberland Subdivision WWTP	McCracken	001-1	10/31/2017	pH	00400-1-0	Effluent Gross											7	SU	SU
KY0083755	Timberland Subdivision WWTP	McCracken	001-1	09/30/2017	pH	00400-1-0	Effluent Gross							7.4	SU					SU
KY0083755	Timberland Subdivision WWTP	McCracken	001-1	09/30/2017	pH	00400-1-0	Effluent Gross											7.4	SU	SU
KY0083755	Timberland Subdivision WWTP	McCracken	001-1	08/31/2017	pH	00400-1-0	Effluent Gross							6.9	SU					SU
KY0083755	Timberland Subdivision WWTP	McCracken	001-1	08/31/2017	pH	00400-1-0	Effluent Gross											6.9	SU	SU
KY0083755	Timberland Subdivision WWTP	McCracken	001-1	07/31/2017	pH	00400-1-0	Effluent Gross							7.4	SU					SU
KY0083755	Timberland Subdivision WWTP	McCracken	001-1	07/31/2017	pH	00400-1-0	Effluent Gross											7.4	SU	SU
KY0083755	Timberland Subdivision WWTP	McCracken	001-1	06/30/2017	pH	00400-1-0	Effluent Gross							7.1	SU					SU
KY0083755	Timberland Subdivision WWTP	McCracken	001-1	06/30/2017	pH	00400-1-0	Effluent Gross											7.1	SU	SU
KY0083755	Timberland Subdivision WWTP	McCracken	001-1	05/31/2017	pH	00400-1-0	Effluent Gross							7.1	SU					SU
KY0083755	Timberland Subdivision WWTP	McCracken	001-1	05/31/2017	pH	00400-1-0	Effluent Gross											7.1	SU	SU
KY0083755	Timberland Subdivision WWTP	McCracken	001-1	04/30/2017	pH	00400-1-0	Effluent Gross							7.2	SU					SU
KY0083755	Timberland Subdivision WWTP	McCracken	001-1	04/30/2017	pH	00400-1-0	Effluent Gross											7.2	SU	SU
KY0083755	Timberland Subdivision WWTP	McCracken	001-1	03/31/2017	pH	00400-1-0	Effluent Gross							6.8	SU					SU
KY0083755	Timberland Subdivision WWTP	McCracken	001-1	03/31/2017	pH	00400-1-0	Effluent Gross											6.8	SU	SU
KY0083755	Timberland Subdivision WWTP	McCracken	001-1	02/28/2017	pH	00400-1-0	Effluent Gross							6.9	SU					SU
KY0083755	Timberland Subdivision WWTP	McCracken	001-1	02/28/2017	pH	00400-1-0	Effluent Gross											6.9	SU	SU
KY0083755	Timberland Subdivision WWTP	McCracken	001-1	01/31/2017	pH	00400-1-0	Effluent Gross							7	SU					SU
KY0083755	Timberland Subdivision WWTP	McCracken	001-1	01/31/2017	pH	00400-1-0	Effluent Gross											7	SU	SU
KY0083755	Timberland Subdivision WWTP	McCracken	001-1	12/31/2016	pH	00400-1-0	Effluent Gross							7.1	SU					SU
KY0083755	Timberland Subdivision WWTP	McCracken	001-1	12/31/2016	pH	00400-1-0	Effluent Gross											7.1	SU	SU
KY0083755	Timberland Subdivision WWTP	McCracken	001-1	11/30/2016	pH	00400-1-0	Effluent Gross							6.9	SU					SU
KY0083755	Timberland Subdivision WWTP	McCracken	001-1	11/30/2016	pH	00400-1-0	Effluent Gross											6.9	SU	SU
KY0083755	Timberland Subdivision WWTP	McCracken	001-1	10/31/2016	pH	00400-1-0	Effluent Gross							7.1	SU					SU
KY0083755	Timberland Subdivision WWTP	McCracken	001-1	10/31/2016	pH	00400-1-0	Effluent Gross											7.1	SU	SU
KY0083755	Timberland Subdivision WWTP	McCracken	001-1	09/30/2016	pH	00400-1-0	Effluent Gross							6.9	SU					SU
KY0083755	Timberland Subdivision WWTP	McCracken	001-1	09/30/2016	pH	00400-1-0	Effluent Gross											6.9	SU	SU
KY0083755	Timberland Subdivision WWTP	McCracken	001-1	08/31/2016	pH	00400-1-0	Effluent Gross							7.2	SU					SU
KY0083755	Timberland Subdivision WWTP	McCracken	001-1	08/31/2016	pH	00400-1-0	Effluent Gross											7.2	SU	SU
KY0083755	Timberland Subdivision WWTP	McCracken	001-1	07/31/2016	pH	00400-1-0	Effluent Gross							6.8	SU					SU

KY0083755	Timberland Subdivision WWTP	McCracken	001-1	07/31/2016	pH	00400-1-0	Effluent Gross											6.8	SU	SU
KY0083755	Timberland Subdivision WWTP	McCracken	001-1	06/30/2016	pH	00400-1-0	Effluent Gross							7.1	SU					SU
KY0083755	Timberland Subdivision WWTP	McCracken	001-1	06/30/2016	pH	00400-1-0	Effluent Gross											7.1	SU	SU
KY0083755	Timberland Subdivision WWTP	McCracken	001-1	05/31/2016	pH	00400-1-0	Effluent Gross							6.7	SU					SU
KY0083755	Timberland Subdivision WWTP	McCracken	001-1	05/31/2016	pH	00400-1-0	Effluent Gross											6.7	SU	SU
KY0083755	Timberland Subdivision WWTP	McCracken	001-1	04/30/2016	pH	00400-1-0	Effluent Gross							7.2	SU					SU
KY0083755	Timberland Subdivision WWTP	McCracken	001-1	04/30/2016	pH	00400-1-0	Effluent Gross											7.2	SU	SU
KY0083755	Timberland Subdivision WWTP	McCracken	001-1	03/31/2016	pH	00400-1-0	Effluent Gross							7.2	SU					SU
KY0083755	Timberland Subdivision WWTP	McCracken	001-1	03/31/2016	pH	00400-1-0	Effluent Gross											7.2	SU	SU
KY0083755	Timberland Subdivision WWTP	McCracken	001-1	02/29/2016	pH	00400-1-0	Effluent Gross							6.7	SU					SU
KY0083755	Timberland Subdivision WWTP	McCracken	001-1	02/29/2016	pH	00400-1-0	Effluent Gross											6.7	SU	SU
KY0083755	Timberland Subdivision WWTP	McCracken	001-1	02/28/2021	Solids, total suspended	00530-1-0	Effluent Gross	3								31	mg/L			mg/L
KY0083755	Timberland Subdivision WWTP	McCracken	001-1	02/28/2021	Solids, total suspended	00530-1-0	Effluent Gross											31	mg/L	mg/L
KY0083755	Timberland Subdivision WWTP	McCracken	001-1	01/31/2021	Solids, total suspended	00530-1-0	Effluent Gross									12	mg/L			mg/L
KY0083755	Timberland Subdivision WWTP	McCracken	001-1	01/31/2021	Solids, total suspended	00530-1-0	Effluent Gross											12	mg/L	mg/L
KY0083755	Timberland Subdivision WWTP	McCracken	001-1	12/31/2020	Solids, total suspended	00530-1-0	Effluent Gross									< 10	mg/L			mg/L
KY0083755	Timberland Subdivision WWTP	McCracken	001-1	12/31/2020	Solids, total suspended	00530-1-0	Effluent Gross											< 10	mg/L	mg/L
KY0083755	Timberland Subdivision WWTP	McCracken	001-1	11/30/2020	Solids, total suspended	00530-1-0	Effluent Gross									6	mg/L			mg/L
KY0083755	Timberland Subdivision WWTP	McCracken	001-1	11/30/2020	Solids, total suspended	00530-1-0	Effluent Gross											6	mg/L	mg/L
KY0083755	Timberland Subdivision WWTP	McCracken	001-1	10/31/2020	Solids, total suspended	00530-1-0	Effluent Gross									16	mg/L			mg/L
KY0083755	Timberland Subdivision WWTP	McCracken	001-1	10/31/2020	Solids, total suspended	00530-1-0	Effluent Gross											16	mg/L	mg/L
KY0083755	Timberland Subdivision WWTP	McCracken	001-1	09/30/2020	Solids, total suspended	00530-1-0	Effluent Gross									23	mg/L			mg/L
KY0083755	Timberland Subdivision WWTP	McCracken	001-1	09/30/2020	Solids, total suspended	00530-1-0	Effluent Gross											36	mg/L	mg/L
KY0083755	Timberland Subdivision WWTP	McCracken	001-1	08/31/2020	Solids, total suspended	00530-1-0	Effluent Gross									24	mg/L			mg/L
KY0083755	Timberland Subdivision WWTP	McCracken	001-1	08/31/2020	Solids, total suspended	00530-1-0	Effluent Gross											29	mg/L	mg/L
KY0083755	Timberland Subdivision WWTP	McCracken	001-1	07/31/2020	Solids, total suspended	00530-1-0	Effluent Gross									18	mg/L			mg/L
KY0083755	Timberland Subdivision WWTP	McCracken	001-1	07/31/2020	Solids, total suspended	00530-1-0	Effluent Gross											18	mg/L	mg/L
KY0083755	Timberland Subdivision WWTP	McCracken	001-1	06/30/2020	Solids, total suspended	00530-1-0	Effluent Gross									15	mg/L			mg/L
KY0083755	Timberland Subdivision WWTP	McCracken	001-1	06/30/2020	Solids, total suspended	00530-1-0	Effluent Gross											15	mg/L	mg/L
KY0083755	Timberland Subdivision WWTP	McCracken	001-1	05/31/2020	Solids, total suspended	00530-1-0	Effluent Gross									21	mg/L			mg/L
KY0083755	Timberland Subdivision WWTP	McCracken	001-1	05/31/2020	Solids, total suspended	00530-1-0	Effluent Gross											21	mg/L	mg/L
KY0083755	Timberland Subdivision WWTP	McCracken	001-1	04/30/2020	Solids, total suspended	00530-1-0	Effluent Gross									9.2	mg/L			mg/L
KY0083755	Timberland Subdivision WWTP	McCracken	001-1	04/30/2020	Solids, total suspended	00530-1-0	Effluent Gross											9.2	mg/L	mg/L
KY0083755	Timberland Subdivision WWTP	McCracken	001-1	03/31/2020	Solids, total suspended	00530-1-0	Effluent Gross									24.5	mg/L			mg/L
KY0083755	Timberland Subdivision WWTP	McCracken	001-1	03/31/2020	Solids, total suspended	00530-1-0	Effluent Gross											24.5	mg/L	mg/L
KY0083755	Timberland Subdivision WWTP	McCracken	001-1	02/29/2020	Solids, total suspended	00530-1-0	Effluent Gross									24.5	mg/L			mg/L
KY0083755	Timberland Subdivision WWTP	McCracken	001-1	02/29/2020	Solids, total suspended	00530-1-0	Effluent Gross											24.5	mg/L	mg/L
KY0083755	Timberland Subdivision WWTP	McCracken	001-1	01/31/2020	Solids, total suspended	00530-1-0	Effluent Gross		3.3	lb/d			lb/d							
KY0083755	Timberland Subdivision WWTP	McCracken	001-1	01/31/2020	Solids, total suspended	00530-1-0	Effluent Gross				3.3	lb/d	lb/d							
KY0083755	Timberland Subdivision WWTP	McCracken	001-1	01/31/2020	Solids, total suspended	00530-1-0	Effluent Gross									20	mg/L			mg/L
KY0083755	Timberland Subdivision WWTP	McCracken	001-1	01/31/2020	Solids, total suspended	00530-1-0	Effluent Gross											20	mg/L	mg/L
KY0083755	Timberland Subdivision WWTP	McCracken	001-1	12/31/2019	Solids, total suspended	00530-1-0	Effluent Gross		0.73	lb/d			lb/d							
KY0083755	Timberland Subdivision WWTP	McCracken	001-1	12/31/2019	Solids, total suspended	00530-1-0	Effluent Gross				0.73	lb/d	lb/d							
KY0083755	Timberland Subdivision WWTP	McCracken	001-1	12/31/2019	Solids, total suspended	00530-1-0	Effluent Gross									4.4	mg/L			mg/L
KY0083755	Timberland Subdivision WWTP	McCracken	001-1	12/31/2019	Solids, total suspended	00530-1-0	Effluent Gross											4.4	mg/L	mg/L
KY0083755	Timberland Subdivision WWTP	McCracken	001-1	11/30/2019	Solids, total suspended	00530-1-0	Effluent Gross		0.78	lb/d			lb/d							
KY0083755	Timberland Subdivision WWTP	McCracken	001-1	11/30/2019	Solids, total suspended	00530-1-0	Effluent Gross				0.78	lb/d	lb/d							
KY0083755	Timberland Subdivision WWTP	McCracken	001-1	11/30/2019	Solids, total suspended	00530-1-0	Effluent Gross									4.7	mg/L			mg/L
KY0083755	Timberland Subdivision WWTP	McCracken	001-1	11/30/2019	Solids, total suspended	00530-1-0	Effluent Gross											4.7	mg/L	mg/L
KY0083755	Timberland Subdivision WWTP	McCracken	001-1	10/31/2019	Solids, total suspended	00530-1-0	Effluent Gross		1.21	lb/d			lb/d							
KY0083755	Timberland Subdivision WWTP	McCracken	001-1	10/31/2019	Solids, total suspended	00530-1-0	Effluent Gross				1.21	lb/d	lb/d							
KY0083755	Timberland Subdivision WWTP	McCracken	001-1	10/31/2019	Solids, total suspended	00530-1-0	Effluent Gross									14.6	mg/L			mg/L
KY0083755	Timberland Subdivision WWTP	McCracken	001-1	10/31/2019	Solids, total suspended	00530-1-0	Effluent Gross											14.6	mg/L	mg/L
KY0083755	Timberland Subdivision WWTP	McCracken	001-1	09/30/2019	Solids, total suspended	00530-1-0	Effluent Gross		0.69	lb/d			lb/d							
KY0083755	Timberland Subdivision WWTP	McCracken	001-1	09/30/2019	Solids, total suspended	00530-1-0	Effluent Gross				0.69	lb/d	lb/d							
KY0083755	Timberland Subdivision WWTP	McCracken	001-1	09/30/2019	Solids, total suspended	00530-1-0	Effluent Gross									3.3	mg/L			mg/L
KY0083755	Timberland Subdivision WWTP	McCracken	001-1	09/30/2019	Solids, total suspended	00530-1-0	Effluent Gross											3.3	mg/L	mg/L
KY0083755	Timberland Subdivision WWTP	McCracken	001-1	08/31/2019	Solids, total suspended	00530-1-0	Effluent Gross		1.6	lb/d			lb/d							
KY0083755	Timberland Subdivision WWTP	McCracken	001-1	08/31/2019	Solids, total suspended	00530-1-0	Effluent Gross				1.6	lb/d	lb/d							
KY0083755	Timberland Subdivision WWTP	McCracken	001-1	08/31/2019	Solids, total suspended	00530-1-0	Effluent Gross									7.7	mg/L			mg/L
KY0083755	Timberland Subdivision WWTP	McCracken	001-1	08/31/2019	Solids, total suspended	00530-1-0	Effluent Gross											7.7	mg/L	mg/L
KY0083755	Timberland Subdivision WWTP	McCracken	001-1	07/31/2019	Solids, total suspended	00530-1-0	Effluent Gross		3.79	lb/d			lb/d							
KY0083755	Timberland Subdivision WWTP	McCracken	001-1	07/31/2019	Solids, total suspended	00530-1-0	Effluent Gross				3.79	lb/d	lb/d							
KY0083755	Timberland Subdivision WWTP	McCracken	001-1	07/31/2019	Solids, total suspended	00530-1-0	Effluent Gross									18.2	mg/L			mg/L
KY0083755	Timberland Subdivision WWTP	McCracken	001-1	07/31/2019	Solids, total suspended	00530-1-0	Effluent Gross											18.2	mg/L	mg/L
KY0083755	Timberland Subdivision WWTP	McCracken	001-1	06/30/2019	Solids, total suspended	00530-1-0	Effluent Gross		0.75	lb/d			lb/d							
KY0083755	Timberland Subdivision WWTP	McCracken	001-1	06/30/2019	Solids, total suspended	00530-1-0	Effluent Gross				0.75	lb/d	lb/d							
KY0083755	Timberland Subdivision WWTP	McCracken	001-1	06/30/2019	Solids, total suspended	00530-1-0	Effluent Gross	49								44.8	mg/L			mg/L
KY0083755	Timberland Subdivision WWTP	McCracken	001-1	06/30/2019	Solids, total suspended	00530-1-0	Effluent Gross											44.8	mg/L	mg/L
KY0083755	Timberland Subdivision WWTP	McCracken	001-1	05/31/2019	Solids, total suspended	00530-1-0	Effluent Gross		0.22	lb/d			lb/d							
KY0083755	Timberland Subdivision WWTP	McCracken	001-1	05/31/2019	Solids, total suspended	00530-1-0	Effluent Gross				0.22	lb/d	lb/d							
KY0083755	Timberland Subdivision WWTP	McCracken	001-1	05/31/2019	Solids, total suspended	00530-1-0	Effluent Gross									13.1	mg/L			mg/L
KY0083755	Timberland Subdivision WWTP	McCracken	001-1	05/31/2019	Solids, total suspended	00530-1-0	Effluent Gross											13.1	mg/L	mg/L
KY0083755	Timberland Subdivision WWTP	McCracken	001-1	04/30/2019	Solids, total suspended	00530-1-0	Effluent Gross		0.11	lb/d			lb/d							
KY0083755	Timberland Subdivision WWTP	McCracken	001-1	04/30/2019	Solids, total suspended	00530-1-0	Effluent Gross				0.11	lb/d	lb/d							
KY0083755	Timberland Subdivision WWTP	McCracken	001-1	04/30/2019	Solids, total suspended	00530-1-0	Effluent Gross									6.4	mg/L			mg/L
KY0083755	Timberland Subdivision WWTP	McCracken	001-1	04/30/2019	Solids, total suspended	00530-1-0	Effluent Gross											6.4	mg/L	mg/L
KY0083755	Timberland Subdivision WWTP	McCracken	001-1	03/31/2019	Solids, total suspended	00530-1-0	Effluent Gross		0.1	lb/d			lb/d							
KY0083755	Timberland Subdivision WWTP	McCracken	001-1	03/31/2019	Solids, total suspended	00530-1-0	Effluent Gross				0.1	lb/d	lb/d							
KY0083755	Timberland Subdivision WWTP	McCracken	001-1	03/31/2019	Solids, total suspended	00530-1-0	Effluent Gross									6.1	mg/L			mg/L
KY0083755	Timberland Subdivision WWTP	McCracken	001-1	03/31/2019	Solids, total suspended	00530-1-0	Effluent Gross											6.1	mg/L	mg/L
KY0083755	Timberland Subdivision WWTP	McCracken	001-1	02/28/2019	Solids, total suspended	00530-1-0	Effluent Gross		0.098	lb/d			lb/d							
KY0083755	Timberland Subdivision WWTP	McCracken	001-1	02/28/2019	Solids, total suspended	00530-1-0	Effluent Gross				0.098	lb/d	lb/d							
KY0083755	Timberland Subdivision WWTP	McCracken	001-1	02/28/2019	Solids, total suspended	00530-1-0	Effluent Gross									5.9	mg/L			mg/L
KY0083755	Timberland Subdivision WWTP	McCracken	001-1	02/28/2019	Solids, total suspended	00530-1-0	Effluent Gross											5.9	mg/L	mg/L
KY0083755	Timberland Subdivision WWTP	McCracken	001-1	01/31/2019	Solids, total suspended	00530-1-0	Effluent Gross		0.055	lb/d			lb/d							
KY0083755	Timberland Subdivision WWTP	McCracken	001-1	01/31/2019	Solids, total suspended	00530-1-0	Effluent Gross				0.055	lb/d	lb/d							
KY0083755	Timberland Subdivision WWTP	McCracken	001-1	01/31/2019	Solids, total suspended	00530-1-0	Effluent Gross									3.3	mg/L			mg/L
KY0083755	Timberland Subdivision WWTP	McCracken	001-1	01/31/2019	Solids, total suspended	00530-1-0	Effluent Gross											3.3	mg/L	mg/L
KY0083755	Timberland Subdivision WWTP	McCracken	001-1	12/31/2018	Solids, total suspended	00530-1-0	Effluent Gross		0.15	lb/d			lb/d							

KY0083755	Timberland Subdivision WWTP	McCracken	001-1	12/31/2018	Solids, total suspended	00530-1-0	Effluent Gross				0.15	lb/d	lb/d							
KY0083755	Timberland Subdivision WWTP	McCracken	001-1	12/31/2018	Solids, total suspended	00530-1-0	Effluent Gross									9.1	mg/L			mg/L
KY0083755	Timberland Subdivision WWTP	McCracken	001-1	12/31/2018	Solids, total suspended	00530-1-0	Effluent Gross											9.1	mg/L	mg/L
KY0083755	Timberland Subdivision WWTP	McCracken	001-1	11/30/2018	Solids, total suspended	00530-1-0	Effluent Gross		NODI B		NODI B		lb/d							
KY0083755	Timberland Subdivision WWTP	McCracken	001-1	11/30/2018	Solids, total suspended	00530-1-0	Effluent Gross									NODI B		NODI B		mg/L
KY0083755	Timberland Subdivision WWTP	McCracken	001-1	10/31/2018	Solids, total suspended	00530-1-0	Effluent Gross		0.08	lb/d			lb/d							
KY0083755	Timberland Subdivision WWTP	McCracken	001-1	10/31/2018	Solids, total suspended	00530-1-0	Effluent Gross				0.08	lb/d	lb/d							
KY0083755	Timberland Subdivision WWTP	McCracken	001-1	10/31/2018	Solids, total suspended	00530-1-0	Effluent Gross									4.7	mg/L			mg/L
KY0083755	Timberland Subdivision WWTP	McCracken	001-1	10/31/2018	Solids, total suspended	00530-1-0	Effluent Gross											4.7	mg/L	mg/L
KY0083755	Timberland Subdivision WWTP	McCracken	001-1	09/30/2018	Solids, total suspended	00530-1-0	Effluent Gross		0.11	lb/d			lb/d							
KY0083755	Timberland Subdivision WWTP	McCracken	001-1	09/30/2018	Solids, total suspended	00530-1-0	Effluent Gross				0.11	lb/d	lb/d							
KY0083755	Timberland Subdivision WWTP	McCracken	001-1	09/30/2018	Solids, total suspended	00530-1-0	Effluent Gross									6.5	mg/L			mg/L
KY0083755	Timberland Subdivision WWTP	McCracken	001-1	09/30/2018	Solids, total suspended	00530-1-0	Effluent Gross											6.5	mg/L	mg/L
KY0083755	Timberland Subdivision WWTP	McCracken	001-1	08/31/2018	Solids, total suspended	00530-1-0	Effluent Gross		0.071	lb/d			lb/d							
KY0083755	Timberland Subdivision WWTP	McCracken	001-1	08/31/2018	Solids, total suspended	00530-1-0	Effluent Gross				0.071	lb/d	lb/d							
KY0083755	Timberland Subdivision WWTP	McCracken	001-1	08/31/2018	Solids, total suspended	00530-1-0	Effluent Gross									4.3	mg/L			mg/L
KY0083755	Timberland Subdivision WWTP	McCracken	001-1	08/31/2018	Solids, total suspended	00530-1-0	Effluent Gross											4.3	mg/L	mg/L
KY0083755	Timberland Subdivision WWTP	McCracken	001-1	07/31/2018	Solids, total suspended	00530-1-0	Effluent Gross		0.13	lb/d			lb/d							
KY0083755	Timberland Subdivision WWTP	McCracken	001-1	07/31/2018	Solids, total suspended	00530-1-0	Effluent Gross				0.13	lb/d	lb/d							
KY0083755	Timberland Subdivision WWTP	McCracken	001-1	07/31/2018	Solids, total suspended	00530-1-0	Effluent Gross									7.9	mg/L			mg/L
KY0083755	Timberland Subdivision WWTP	McCracken	001-1	07/31/2018	Solids, total suspended	00530-1-0	Effluent Gross											7.9	mg/L	mg/L
KY0083755	Timberland Subdivision WWTP	McCracken	001-1	06/30/2018	Solids, total suspended	00530-1-0	Effluent Gross		0.138	lb/d			lb/d							
KY0083755	Timberland Subdivision WWTP	McCracken	001-1	06/30/2018	Solids, total suspended	00530-1-0	Effluent Gross				0.138	lb/d	lb/d							
KY0083755	Timberland Subdivision WWTP	McCracken	001-1	06/30/2018	Solids, total suspended	00530-1-0	Effluent Gross									8.3	mg/L			mg/L
KY0083755	Timberland Subdivision WWTP	McCracken	001-1	06/30/2018	Solids, total suspended	00530-1-0	Effluent Gross											8.3	mg/L	mg/L
KY0083755	Timberland Subdivision WWTP	McCracken	001-1	05/31/2018	Solids, total suspended	00530-1-0	Effluent Gross		NODI B		NODI B		lb/d							
KY0083755	Timberland Subdivision WWTP	McCracken	001-1	05/31/2018	Solids, total suspended	00530-1-0	Effluent Gross									NODI B		NODI B		mg/L
KY0083755	Timberland Subdivision WWTP	McCracken	001-1	04/30/2018	Solids, total suspended	00530-1-0	Effluent Gross		0.076	lb/d			lb/d							
KY0083755	Timberland Subdivision WWTP	McCracken	001-1	04/30/2018	Solids, total suspended	00530-1-0	Effluent Gross				0.076	lb/d	lb/d							
KY0083755	Timberland Subdivision WWTP	McCracken	001-1	04/30/2018	Solids, total suspended	00530-1-0	Effluent Gross									4.6	mg/L			mg/L
KY0083755	Timberland Subdivision WWTP	McCracken	001-1	04/30/2018	Solids, total suspended	00530-1-0	Effluent Gross											4.6	mg/L	mg/L
KY0083755	Timberland Subdivision WWTP	McCracken	001-1	03/31/2018	Solids, total suspended	00530-1-0	Effluent Gross		0.05	lb/d			lb/d							
KY0083755	Timberland Subdivision WWTP	McCracken	001-1	03/31/2018	Solids, total suspended	00530-1-0	Effluent Gross				0.05	lb/d	lb/d							
KY0083755	Timberland Subdivision WWTP	McCracken	001-1	03/31/2018	Solids, total suspended	00530-1-0	Effluent Gross									3.1	mg/L			mg/L
KY0083755	Timberland Subdivision WWTP	McCracken	001-1	03/31/2018	Solids, total suspended	00530-1-0	Effluent Gross											3.1	mg/L	mg/L
KY0083755	Timberland Subdivision WWTP	McCracken	001-1	02/28/2018	Solids, total suspended	00530-1-0	Effluent Gross		0.06	lb/d			lb/d							
KY0083755	Timberland Subdivision WWTP	McCracken	001-1	02/28/2018	Solids, total suspended	00530-1-0	Effluent Gross				0.06	lb/d	lb/d							
KY0083755	Timberland Subdivision WWTP	McCracken	001-1	02/28/2018	Solids, total suspended	00530-1-0	Effluent Gross									3.8	mg/L			mg/L
KY0083755	Timberland Subdivision WWTP	McCracken	001-1	02/28/2018	Solids, total suspended	00530-1-0	Effluent Gross											3.8	mg/L	mg/L
KY0083755	Timberland Subdivision WWTP	McCracken	001-1	01/31/2018	Solids, total suspended	00530-1-0	Effluent Gross		0.09	lb/d			lb/d							
KY0083755	Timberland Subdivision WWTP	McCracken	001-1	01/31/2018	Solids, total suspended	00530-1-0	Effluent Gross				0.09	lb/d	lb/d							
KY0083755	Timberland Subdivision WWTP	McCracken	001-1	01/31/2018	Solids, total suspended	00530-1-0	Effluent Gross									5.4	mg/L			mg/L
KY0083755	Timberland Subdivision WWTP	McCracken	001-1	01/31/2018	Solids, total suspended	00530-1-0	Effluent Gross											5.4	mg/L	mg/L
KY0083755	Timberland Subdivision WWTP	McCracken	001-1	12/31/2017	Solids, total suspended	00530-1-0	Effluent Gross		0.068	lb/d			lb/d							
KY0083755	Timberland Subdivision WWTP	McCracken	001-1	12/31/2017	Solids, total suspended	00530-1-0	Effluent Gross				0.068	lb/d	lb/d							
KY0083755	Timberland Subdivision WWTP	McCracken	001-1	12/31/2017	Solids, total suspended	00530-1-0	Effluent Gross									4.1	mg/L			mg/L
KY0083755	Timberland Subdivision WWTP	McCracken	001-1	12/31/2017	Solids, total suspended	00530-1-0	Effluent Gross											4.1	mg/L	mg/L
KY0083755	Timberland Subdivision WWTP	McCracken	001-1	11/30/2017	Solids, total suspended	00530-1-0	Effluent Gross		0.05	lb/d			lb/d							
KY0083755	Timberland Subdivision WWTP	McCracken	001-1	11/30/2017	Solids, total suspended	00530-1-0	Effluent Gross				0.05	lb/d	lb/d							
KY0083755	Timberland Subdivision WWTP	McCracken	001-1	11/30/2017	Solids, total suspended	00530-1-0	Effluent Gross									3.2	mg/L			mg/L
KY0083755	Timberland Subdivision WWTP	McCracken	001-1	11/30/2017	Solids, total suspended	00530-1-0	Effluent Gross											3.2	mg/L	mg/L
KY0083755	Timberland Subdivision WWTP	McCracken	001-1	10/31/2017	Solids, total suspended	00530-1-0	Effluent Gross		0.12	lb/d			lb/d							
KY0083755	Timberland Subdivision WWTP	McCracken	001-1	10/31/2017	Solids, total suspended	00530-1-0	Effluent Gross				0.12	lb/d	lb/d							
KY0083755	Timberland Subdivision WWTP	McCracken	001-1	10/31/2017	Solids, total suspended	00530-1-0	Effluent Gross									6.9	mg/L			mg/L
KY0083755	Timberland Subdivision WWTP	McCracken	001-1	10/31/2017	Solids, total suspended	00530-1-0	Effluent Gross											6.9	mg/L	mg/L
KY0083755	Timberland Subdivision WWTP	McCracken	001-1	09/30/2017	Solids, total suspended	00530-1-0	Effluent Gross		0.05	lb/d			lb/d							
KY0083755	Timberland Subdivision WWTP	McCracken	001-1	09/30/2017	Solids, total suspended	00530-1-0	Effluent Gross				0.05	lb/d	lb/d							
KY0083755	Timberland Subdivision WWTP	McCracken	001-1	09/30/2017	Solids, total suspended	00530-1-0	Effluent Gross									3.3	mg/L			mg/L
KY0083755	Timberland Subdivision WWTP	McCracken	001-1	09/30/2017	Solids, total suspended	00530-1-0	Effluent Gross											3.3	mg/L	mg/L
KY0083755	Timberland Subdivision WWTP	McCracken	001-1	08/31/2017	Solids, total suspended	00530-1-0	Effluent Gross		0.058	lb/d			lb/d							
KY0083755	Timberland Subdivision WWTP	McCracken	001-1	08/31/2017	Solids, total suspended	00530-1-0	Effluent Gross				0.058	lb/d	lb/d							
KY0083755	Timberland Subdivision WWTP	McCracken	001-1	08/31/2017	Solids, total suspended	00530-1-0	Effluent Gross									3.5	mg/L			mg/L
KY0083755	Timberland Subdivision WWTP	McCracken	001-1	08/31/2017	Solids, total suspended	00530-1-0	Effluent Gross											3.5	mg/L	mg/L
KY0083755	Timberland Subdivision WWTP	McCracken	001-1	07/31/2017	Solids, total suspended	00530-1-0	Effluent Gross		0.066	lb/d			lb/d							
KY0083755	Timberland Subdivision WWTP	McCracken	001-1	07/31/2017	Solids, total suspended	00530-1-0	Effluent Gross				0.066	lb/d	lb/d							
KY0083755	Timberland Subdivision WWTP	McCracken	001-1	07/31/2017	Solids, total suspended	00530-1-0	Effluent Gross									4	mg/L			mg/L
KY0083755	Timberland Subdivision WWTP	McCracken	001-1	07/31/2017	Solids, total suspended	00530-1-0	Effluent Gross											4	mg/L	mg/L
KY0083755	Timberland Subdivision WWTP	McCracken	001-1	06/30/2017	Solids, total suspended	00530-1-0	Effluent Gross		0.17	lb/d			lb/d							
KY0083755	Timberland Subdivision WWTP	McCracken	001-1	06/30/2017	Solids, total suspended	00530-1-0	Effluent Gross				0.17	lb/d	lb/d							
KY0083755	Timberland Subdivision WWTP	McCracken	001-1	06/30/2017	Solids, total suspended	00530-1-0	Effluent Gross									10	mg/L			mg/L
KY0083755	Timberland Subdivision WWTP	McCracken	001-1	06/30/2017	Solids, total suspended	00530-1-0	Effluent Gross											10	mg/L	mg/L
KY0083755	Timberland Subdivision WWTP	McCracken	001-1	05/31/2017	Solids, total suspended	00530-1-0	Effluent Gross		0.043	lb/d			lb/d							
KY0083755	Timberland Subdivision WWTP	McCracken	001-1	05/31/2017	Solids, total suspended	00530-1-0	Effluent Gross				0.043	lb/d	lb/d							
KY0083755	Timberland Subdivision WWTP	McCracken	001-1	05/31/2017	Solids, total suspended	00530-1-0	Effluent Gross									2.6	mg/L			mg/L
KY0083755	Timberland Subdivision WWTP	McCracken	001-1	05/31/2017	Solids, total suspended	00530-1-0	Effluent Gross											2.6	mg/L	mg/L
KY0083755	Timberland Subdivision WWTP	McCracken	001-1	04/30/2017	Solids, total suspended	00530-1-0	Effluent Gross		0.103	lb/d			lb/d							
KY0083755	Timberland Subdivision WWTP	McCracken	001-1	04/30/2017	Solids, total suspended	00530-1-0	Effluent Gross				0.003	lb/d	lb/d							
KY0083755	Timberland Subdivision WWTP	McCracken	001-1	04/30/2017	Solids, total suspended	00530-1-0	Effluent Gross									6.2	mg/L			mg/L
KY0083755	Timberland Subdivision WWTP	McCracken	001-1	04/30/2017	Solids, total suspended	00530-1-0	Effluent Gross											6.2	mg/L	mg/L
KY0083755	Timberland Subdivision WWTP	McCracken	001-1	03/31/2017	Solids, total suspended	00530-1-0	Effluent Gross		0.004	lb/d			lb/d							
KY0083755	Timberland Subdivision WWTP	McCracken	001-1	03/31/2017	Solids, total suspended	00530-1-0	Effluent Gross				0.004	lb/d	lb/d							
KY0083755	Timberland Subdivision WWTP	McCracken	001-1	03/31/2017	Solids, total suspended	00530-1-0	Effluent Gross									4.6	mg/L			mg/L
KY0083755	Timberland Subdivision WWTP	McCracken	001-1	03/31/2017	Solids, total suspended	00530-1-0	Effluent Gross											4.6	mg/L	mg/L
KY0083755	Timberland Subdivision WWTP	McCracken	001-1	02/28/2017	Solids, total suspended	00530-1-0	Effluent Gross		0.18	lb/d			lb/d							
KY0083755	Timberland Subdivision WWTP	McCracken	001-1	02/28/2017	Solids, total suspended	00530-1-0	Effluent Gross				0.18	lb/d	lb/d							
KY0083755	Timberland Subdivision WWTP	McCracken	001-1	02/28/2017	Solids, total suspended	00530-1-0	Effluent Gross									10.6	mg/L			mg/L
KY0083755	Timberland Subdivision WWTP	McCracken	001-1	02/28/2017	Solids, total suspended	00530-1-0	Effluent Gross											10.6	mg/L	mg/L
KY0083755	Timberland Subdivision WWTP	McCracken	001-1	01/31/2017	Solids, total suspended	00530-1-0	Effluent Gross		0.06	lb/d			lb/d							
KY0083755	Timberland Subdivision WWTP	McCracken	001-1	01/31/2017	Solids, total suspended	00530-1-0	Effluent Gross				0.06	lb/d	lb/d							
KY0083755	Timberland Subdivision WWTP	McCracken	001-1	01/31/2017	Solids, total suspended	00530-1-0	Effluent Gross									3.8	mg/L			mg/L

KY0083755	Timberland Subdivision WWTP	McCracken	001-1	01/31/2017	Solids, total suspended	00530-1-0	Effluent Gross											3.8	mg/L	mg/L
KY0083755	Timberland Subdivision WWTP	McCracken	001-1	12/31/2016	Solids, total suspended	00530-1-0	Effluent Gross		0.06	lb/d			lb/d							
KY0083755	Timberland Subdivision WWTP	McCracken	001-1	12/31/2016	Solids, total suspended	00530-1-0	Effluent Gross				0.06	lb/d	lb/d							
KY0083755	Timberland Subdivision WWTP	McCracken	001-1	12/31/2016	Solids, total suspended	00530-1-0	Effluent Gross										3.6	mg/L		mg/L
KY0083755	Timberland Subdivision WWTP	McCracken	001-1	12/31/2016	Solids, total suspended	00530-1-0	Effluent Gross												3.6	mg/L	mg/L
KY0083755	Timberland Subdivision WWTP	McCracken	001-1	11/30/2016	Solids, total suspended	00530-1-0	Effluent Gross		0.07	lb/d			lb/d							
KY0083755	Timberland Subdivision WWTP	McCracken	001-1	11/30/2016	Solids, total suspended	00530-1-0	Effluent Gross				0.07	lb/d	lb/d							
KY0083755	Timberland Subdivision WWTP	McCracken	001-1	11/30/2016	Solids, total suspended	00530-1-0	Effluent Gross										3.9	mg/L		mg/L
KY0083755	Timberland Subdivision WWTP	McCracken	001-1	11/30/2016	Solids, total suspended	00530-1-0	Effluent Gross												3.9	mg/L	mg/L
KY0083755	Timberland Subdivision WWTP	McCracken	001-1	10/31/2016	Solids, total suspended	00530-1-0	Effluent Gross		0.13	lb/d			lb/d							
KY0083755	Timberland Subdivision WWTP	McCracken	001-1	10/31/2016	Solids, total suspended	00530-1-0	Effluent Gross				0.13	lb/d	lb/d							
KY0083755	Timberland Subdivision WWTP	McCracken	001-1	10/31/2016	Solids, total suspended	00530-1-0	Effluent Gross										7.8	mg/L		mg/L
KY0083755	Timberland Subdivision WWTP	McCracken	001-1	10/31/2016	Solids, total suspended	00530-1-0	Effluent Gross												7.8	mg/L	mg/L
KY0083755	Timberland Subdivision WWTP	McCracken	001-1	09/30/2016	Solids, total suspended	00530-1-0	Effluent Gross		0.06	lb/d			lb/d							
KY0083755	Timberland Subdivision WWTP	McCracken	001-1	09/30/2016	Solids, total suspended	00530-1-0	Effluent Gross				0.06	lb/d	lb/d							
KY0083755	Timberland Subdivision WWTP	McCracken	001-1	09/30/2016	Solids, total suspended	00530-1-0	Effluent Gross										3.5	mg/L		mg/L
KY0083755	Timberland Subdivision WWTP	McCracken	001-1	09/30/2016	Solids, total suspended	00530-1-0	Effluent Gross												3.5	mg/L	mg/L
KY0083755	Timberland Subdivision WWTP	McCracken	001-1	08/31/2016	Solids, total suspended	00530-1-0	Effluent Gross		NODI B		NODI B		lb/d							
KY0083755	Timberland Subdivision WWTP	McCracken	001-1	08/31/2016	Solids, total suspended	00530-1-0	Effluent Gross										NODI B		NODI B		mg/L
KY0083755	Timberland Subdivision WWTP	McCracken	001-1	07/31/2016	Solids, total suspended	00530-1-0	Effluent Gross		0.15	lb/d			lb/d							
KY0083755	Timberland Subdivision WWTP	McCracken	001-1	07/31/2016	Solids, total suspended	00530-1-0	Effluent Gross				0.15	lb/d	lb/d							
KY0083755	Timberland Subdivision WWTP	McCracken	001-1	07/31/2016	Solids, total suspended	00530-1-0	Effluent Gross										8.7	mg/L		mg/L
KY0083755	Timberland Subdivision WWTP	McCracken	001-1	07/31/2016	Solids, total suspended	00530-1-0	Effluent Gross												8.7	mg/L	mg/L
KY0083755	Timberland Subdivision WWTP	McCracken	001-1	06/30/2016	Solids, total suspended	00530-1-0	Effluent Gross		1	lb/d			lb/d							
KY0083755	Timberland Subdivision WWTP	McCracken	001-1	06/30/2016	Solids, total suspended	00530-1-0	Effluent Gross				1	lb/d	lb/d							
KY0083755	Timberland Subdivision WWTP	McCracken	001-1	06/30/2016	Solids, total suspended	00530-1-0	Effluent Gross										5.7	mg/L		mg/L
KY0083755	Timberland Subdivision WWTP	McCracken	001-1	06/30/2016	Solids, total suspended	00530-1-0	Effluent Gross												5.7	mg/L	mg/L
KY0083755	Timberland Subdivision WWTP	McCracken	001-1	05/31/2016	Solids, total suspended	00530-1-0	Effluent Gross		0.06	lb/d			lb/d							
KY0083755	Timberland Subdivision WWTP	McCracken	001-1	05/31/2016	Solids, total suspended	00530-1-0	Effluent Gross				0.06	lb/d	lb/d							
KY0083755	Timberland Subdivision WWTP	McCracken	001-1	05/31/2016	Solids, total suspended	00530-1-0	Effluent Gross										3.5	mg/L		mg/L
KY0083755	Timberland Subdivision WWTP	McCracken	001-1	05/31/2016	Solids, total suspended	00530-1-0	Effluent Gross												3.5	mg/L	mg/L
KY0083755	Timberland Subdivision WWTP	McCracken	001-1	04/30/2016	Solids, total suspended	00530-1-0	Effluent Gross		0.15	lb/d			lb/d							
KY0083755	Timberland Subdivision WWTP	McCracken	001-1	04/30/2016	Solids, total suspended	00530-1-0	Effluent Gross				0.15	lb/d	lb/d							
KY0083755	Timberland Subdivision WWTP	McCracken	001-1	04/30/2016	Solids, total suspended	00530-1-0	Effluent Gross										9.1	mg/L		mg/L
KY0083755	Timberland Subdivision WWTP	McCracken	001-1	04/30/2016	Solids, total suspended	00530-1-0	Effluent Gross												9.1	mg/L	mg/L
KY0083755	Timberland Subdivision WWTP	McCracken	001-1	03/31/2016	Solids, total suspended	00530-1-0	Effluent Gross		0.08	lb/d			lb/d							
KY0083755	Timberland Subdivision WWTP	McCracken	001-1	03/31/2016	Solids, total suspended	00530-1-0	Effluent Gross				0.08	lb/d	lb/d							
KY0083755	Timberland Subdivision WWTP	McCracken	001-1	03/31/2016	Solids, total suspended	00530-1-0	Effluent Gross										4.6	mg/L		mg/L
KY0083755	Timberland Subdivision WWTP	McCracken	001-1	03/31/2016	Solids, total suspended	00530-1-0	Effluent Gross												4.6	mg/L	mg/L
KY0083755	Timberland Subdivision WWTP	McCracken	001-1	02/29/2016	Solids, total suspended	00530-1-0	Effluent Gross		0.42	lb/d			lb/d							
KY0083755	Timberland Subdivision WWTP	McCracken	001-1	02/29/2016	Solids, total suspended	00530-1-0	Effluent Gross				0.42	lb/d	lb/d							
KY0083755	Timberland Subdivision WWTP	McCracken	001-1	02/29/2016	Solids, total suspended	00530-1-0	Effluent Gross										25	mg/L		mg/L
KY0083755	Timberland Subdivision WWTP	McCracken	001-1	02/29/2016	Solids, total suspended	00530-1-0	Effluent Gross												25	mg/L	mg/L
KY0083755	Timberland Subdivision WWTP	McCracken	001-1	10/31/2020	Nitrogen, ammonia total [as	00610-1-1	Effluent Gross	145									4.9	mg/L			mg/L
KY0083755	Timberland Subdivision WWTP	McCracken	001-1	10/31/2020	Nitrogen, ammonia total [as	00610-1-1	Effluent Gross	63											4.9	mg/L	mg/L
KY0083755	Timberland Subdivision WWTP	McCracken	001-1	09/30/2020	Nitrogen, ammonia total [as	00610-1-1	Effluent Gross	313									8.25	mg/L			mg/L
KY0083755	Timberland Subdivision WWTP	McCracken	001-1	09/30/2020	Nitrogen, ammonia total [as	00610-1-1	Effluent Gross	193											8.8	mg/L	mg/L
KY0083755	Timberland Subdivision WWTP	McCracken	001-1	08/31/2020	Nitrogen, ammonia total [as	00610-1-1	Effluent Gross	700									16	mg/L			mg/L
KY0083755	Timberland Subdivision WWTP	McCracken	001-1	08/31/2020	Nitrogen, ammonia total [as	00610-1-1	Effluent Gross	433											16	mg/L	mg/L
KY0083755	Timberland Subdivision WWTP	McCracken	001-1	07/31/2020	Nitrogen, ammonia total [as	00610-1-1	Effluent Gross	800									18	mg/L			mg/L
KY0083755	Timberland Subdivision WWTP	McCracken	001-1	07/31/2020	Nitrogen, ammonia total [as	00610-1-1	Effluent Gross	500											18	mg/L	mg/L
KY0083755	Timberland Subdivision WWTP	McCracken	001-1	06/30/2020	Nitrogen, ammonia total [as	00610-1-1	Effluent Gross	700									16	mg/L			mg/L
KY0083755	Timberland Subdivision WWTP	McCracken	001-1	06/30/2020	Nitrogen, ammonia total [as	00610-1-1	Effluent Gross	433											16	mg/L	mg/L
KY0083755	Timberland Subdivision WWTP	McCracken	001-1	05/31/2020	Nitrogen, ammonia total [as	00610-1-1	Effluent Gross	700									16	mg/L			mg/L
KY0083755	Timberland Subdivision WWTP	McCracken	001-1	05/31/2020	Nitrogen, ammonia total [as	00610-1-1	Effluent Gross	433											16	mg/L	mg/L
KY0083755	Timberland Subdivision WWTP	McCracken	001-1	10/31/2019	Nitrogen, ammonia total [as	00610-1-1	Effluent Gross		0.138	lb/d			lb/d							
KY0083755	Timberland Subdivision WWTP	McCracken	001-1	10/31/2019	Nitrogen, ammonia total [as	00610-1-1	Effluent Gross				0.138	lb/d	lb/d							
KY0083755	Timberland Subdivision WWTP	McCracken	001-1	10/31/2019	Nitrogen, ammonia total [as	00610-1-1	Effluent Gross										0.83	mg/L			mg/L
KY0083755	Timberland Subdivision WWTP	McCracken	001-1	10/31/2019	Nitrogen, ammonia total [as	00610-1-1	Effluent Gross												0.83	mg/L	mg/L
KY0083755	Timberland Subdivision WWTP	McCracken	001-1	09/30/2019	Nitrogen, ammonia total [as	00610-1-1	Effluent Gross	155	1.02	lb/d			lb/d							
KY0083755	Timberland Subdivision WWTP	McCracken	001-1	09/30/2019	Nitrogen, ammonia total [as	00610-1-1	Effluent Gross	70			1.02	lb/d	lb/d							
KY0083755	Timberland Subdivision WWTP	McCracken	001-1	09/30/2019	Nitrogen, ammonia total [as	00610-1-1	Effluent Gross	147									4.93	mg/L			mg/L
KY0083755	Timberland Subdivision WWTP	McCracken	001-1	09/30/2019	Nitrogen, ammonia total [as	00610-1-1	Effluent Gross	64											4.93	mg/L	mg/L
KY0083755	Timberland Subdivision WWTP	McCracken	001-1	08/31/2019	Nitrogen, ammonia total [as	00610-1-1	Effluent Gross		NODI B		NODI B		lb/d							
KY0083755	Timberland Subdivision WWTP	McCracken	001-1	08/31/2019	Nitrogen, ammonia total [as	00610-1-1	Effluent Gross										NODI B		NODI B		mg/L
KY0083755	Timberland Subdivision WWTP	McCracken	001-1	07/31/2019	Nitrogen, ammonia total [as	00610-1-1	Effluent Gross		0.079	lb/d			lb/d							
KY0083755	Timberland Subdivision WWTP	McCracken	001-1	07/31/2019	Nitrogen, ammonia total [as	00610-1-1	Effluent Gross				0.079	lb/d	lb/d							
KY0083755	Timberland Subdivision WWTP	McCracken	001-1	07/31/2019	Nitrogen, ammonia total [as	00610-1-1	Effluent Gross										0.38	mg/L			mg/L
KY0083755	Timberland Subdivision WWTP	McCracken	001-1	07/31/2019	Nitrogen, ammonia total [as	00610-1-1	Effluent Gross												0.38	mg/L	mg/L
KY0083755	Timberland Subdivision WWTP	McCracken	001-1	06/30/2019	Nitrogen, ammonia total [as	00610-1-1	Effluent Gross		NODI B		NODI B		lb/d							
KY0083755	Timberland Subdivision WWTP	McCracken	001-1	06/30/2019	Nitrogen, ammonia total [as	00610-1-1	Effluent Gross										NODI B		NODI B		mg/L
KY0083755	Timberland Subdivision WWTP	McCracken	001-1	05/31/2019	Nitrogen, ammonia total [as	00610-1-1	Effluent Gross		0.051	lb/d			lb/d							
KY0083755	Timberland Subdivision WWTP	McCracken	001-1	05/31/2019	Nitrogen, ammonia total [as	00610-1-1	Effluent Gross				0.051	lb/d	lb/d							
KY0083755	Timberland Subdivision WWTP	McCracken	001-1	05/31/2019	Nitrogen, ammonia total [as	00610-1-1	Effluent Gross	54									3.07	mg/L			mg/L
KY0083755	Timberland Subdivision WWTP	McCracken	001-1	05/31/2019	Nitrogen, ammonia total [as	00610-1-1	Effluent Gross	2											3.07	mg/L	mg/L
KY0083755	Timberland Subdivision WWTP	McCracken	001-1	10/31/2018	Nitrogen, ammonia total [as	00610-1-1	Effluent Gross		0.11	lb/d			lb/d							
KY0083755	Timberland Subdivision WWTP	McCracken	001-1	10/31/2018	Nitrogen, ammonia total [as	00610-1-1	Effluent Gross				0.11	lb/d	lb/d							
KY0083755	Timberland Subdivision WWTP	McCracken	001-1	10/31/2018	Nitrogen, ammonia total [as	00610-1-1	Effluent Gross	219									6.38	mg/L			mg/L
KY0083755	Timberland Subdivision WWTP	McCracken	001-1	10/31/2018	Nitrogen, ammonia total [as	00610-1-1	Effluent Gross	113											6.38	mg/L	mg/L
KY0083755	Timberland Subdivision WWTP	McCracken	001-1	09/30/2018	Nitrogen, ammonia total [as	00610-1-1	Effluent Gross		0.14	lb/d			lb/d							
KY0083755	Timberland Subdivision WWTP	McCracken	001-1	09/30/2018	Nitrogen, ammonia total [as	00610-1-1	Effluent Gross				0.14	lb/d	lb/d							
KY0083755	Timberland Subdivision WWTP	McCracken	001-1	09/30/2018	Nitrogen, ammonia total [as	00610-1-1	Effluent Gross	332									8.63	mg/L			mg/L
KY0083755	Timberland Subdivision WWTP	McCracken	001-1	09/30/2018	Nitrogen, ammonia total [as	00610-1-1	Effluent Gross	188											8.63	mg/L	mg/L
KY0083755	Timberland Subdivision WWTP	McCracken	001-1	08/31/2018	Nitrogen, ammonia total [as	00610-1-1	Effluent Gross		0.061	lb/d			lb/d							
KY0083755	Timberland Subdivision WWTP	McCracken	001-1	08/31/2018	Nitrogen, ammonia total [as	00610-1-1	Effluent Gross				0.061	lb/d	lb/d							
KY0083755	Timberland Subdivision WWTP	McCracken	001-1	08/31/2018	Nitrogen, ammonia total [as	00610-1-1	Effluent Gross	84									3.67	mg/L			mg/L
KY0083755	Timberland Subdivision WWTP	McCracken	001-1	08/31/2018	Nitrogen, ammonia total [as	00610-1-1	Effluent Gross	22											3.67	mg/L	mg/L
KY0083755	Timberland Subdivision WWTP	McCracken	001-1	07/31/2018	Nitrogen, ammonia total [as	00610-1-1	Effluent Gross		0.041	lb/d			lb/d							
KY0083755	Timberland Subdivision WWTP	McCracken	001-1	07/31/2018	Nitrogen, ammonia total [as	00610-1-1	Effluent Gross				0.041	lb/d	lb/d							
KY0083755	Timberland Subdivision WWTP	McCracken	001-1	07/31/2018	Nitrogen, ammonia total [as	00610-1-1	Effluent Gross	26									2.51	mg/L			mg/L

KY0083755	Timberland Subdivision WWTP	McCracken	001-1	07/31/2018	Nitrogen, ammonia total [as	00610-1-1	Effluent Gross						lb/d					2.51	mg/L	mg/L
KY0083755	Timberland Subdivision WWTP	McCracken	001-1	06/30/2018	Nitrogen, ammonia total [as	00610-1-1	Effluent Gross		0.041	lb/d			lb/d							
KY0083755	Timberland Subdivision WWTP	McCracken	001-1	06/30/2018	Nitrogen, ammonia total [as	00610-1-1	Effluent Gross				0.041	lb/d	lb/d							
KY0083755	Timberland Subdivision WWTP	McCracken	001-1	06/30/2018	Nitrogen, ammonia total [as	00610-1-1	Effluent Gross	24								2.48	mg/L			mg/L
KY0083755	Timberland Subdivision WWTP	McCracken	001-1	06/30/2018	Nitrogen, ammonia total [as	00610-1-1	Effluent Gross											2.48	mg/L	mg/L
KY0083755	Timberland Subdivision WWTP	McCracken	001-1	05/31/2018	Nitrogen, ammonia total [as	00610-1-1	Effluent Gross		0.019	lb/d			lb/d							
KY0083755	Timberland Subdivision WWTP	McCracken	001-1	05/31/2018	Nitrogen, ammonia total [as	00610-1-1	Effluent Gross				0.019	lb/d	lb/d							
KY0083755	Timberland Subdivision WWTP	McCracken	001-1	05/31/2018	Nitrogen, ammonia total [as	00610-1-1	Effluent Gross									1.18	mg/L			mg/L
KY0083755	Timberland Subdivision WWTP	McCracken	001-1	05/31/2018	Nitrogen, ammonia total [as	00610-1-1	Effluent Gross											1.18	mg/L	mg/L
KY0083755	Timberland Subdivision WWTP	McCracken	001-1	10/31/2017	Nitrogen, ammonia total [as	00610-1-1	Effluent Gross		0.033	lb/d			lb/d							
KY0083755	Timberland Subdivision WWTP	McCracken	001-1	10/31/2017	Nitrogen, ammonia total [as	00610-1-1	Effluent Gross				0.033	lb/d	lb/d							
KY0083755	Timberland Subdivision WWTP	McCracken	001-1	10/31/2017	Nitrogen, ammonia total [as	00610-1-1	Effluent Gross									1.95	mg/L			mg/L
KY0083755	Timberland Subdivision WWTP	McCracken	001-1	10/31/2017	Nitrogen, ammonia total [as	00610-1-1	Effluent Gross											1.95	mg/L	mg/L
KY0083755	Timberland Subdivision WWTP	McCracken	001-1	09/30/2017	Nitrogen, ammonia total [as	00610-1-1	Effluent Gross		0.02	lb/d			lb/d							
KY0083755	Timberland Subdivision WWTP	McCracken	001-1	09/30/2017	Nitrogen, ammonia total [as	00610-1-1	Effluent Gross				0.02	lb/d	lb/d							
KY0083755	Timberland Subdivision WWTP	McCracken	001-1	09/30/2017	Nitrogen, ammonia total [as	00610-1-1	Effluent Gross									1.43	mg/L			mg/L
KY0083755	Timberland Subdivision WWTP	McCracken	001-1	09/30/2017	Nitrogen, ammonia total [as	00610-1-1	Effluent Gross											1.43	mg/L	mg/L
KY0083755	Timberland Subdivision WWTP	McCracken	001-1	08/31/2017	Nitrogen, ammonia total [as	00610-1-1	Effluent Gross		0.025	lb/d			lb/d							
KY0083755	Timberland Subdivision WWTP	McCracken	001-1	08/31/2017	Nitrogen, ammonia total [as	00610-1-1	Effluent Gross				0.025	lb/d	lb/d							
KY0083755	Timberland Subdivision WWTP	McCracken	001-1	08/31/2017	Nitrogen, ammonia total [as	00610-1-1	Effluent Gross									1.52	mg/L			mg/L
KY0083755	Timberland Subdivision WWTP	McCracken	001-1	08/31/2017	Nitrogen, ammonia total [as	00610-1-1	Effluent Gross											1.52	mg/L	mg/L
KY0083755	Timberland Subdivision WWTP	McCracken	001-1	07/31/2017	Nitrogen, ammonia total [as	00610-1-1	Effluent Gross		0.027	lb/d			lb/d							
KY0083755	Timberland Subdivision WWTP	McCracken	001-1	07/31/2017	Nitrogen, ammonia total [as	00610-1-1	Effluent Gross				0.027	lb/d	lb/d							
KY0083755	Timberland Subdivision WWTP	McCracken	001-1	07/31/2017	Nitrogen, ammonia total [as	00610-1-1	Effluent Gross									1.6	mg/L			mg/L
KY0083755	Timberland Subdivision WWTP	McCracken	001-1	07/31/2017	Nitrogen, ammonia total [as	00610-1-1	Effluent Gross											1.6	mg/L	mg/L
KY0083755	Timberland Subdivision WWTP	McCracken	001-1	06/30/2017	Nitrogen, ammonia total [as	00610-1-1	Effluent Gross		0.052	lb/d			lb/d							
KY0083755	Timberland Subdivision WWTP	McCracken	001-1	06/30/2017	Nitrogen, ammonia total [as	00610-1-1	Effluent Gross				0.052	lb/d	lb/d							
KY0083755	Timberland Subdivision WWTP	McCracken	001-1	06/30/2017	Nitrogen, ammonia total [as	00610-1-1	Effluent Gross	58								3.16	mg/L			mg/L
KY0083755	Timberland Subdivision WWTP	McCracken	001-1	06/30/2017	Nitrogen, ammonia total [as	00610-1-1	Effluent Gross	5										3.16	mg/L	mg/L
KY0083755	Timberland Subdivision WWTP	McCracken	001-1	05/31/2017	Nitrogen, ammonia total [as	00610-1-1	Effluent Gross		0.01	lb/d			lb/d							
KY0083755	Timberland Subdivision WWTP	McCracken	001-1	05/31/2017	Nitrogen, ammonia total [as	00610-1-1	Effluent Gross				0.01	lb/d	lb/d							
KY0083755	Timberland Subdivision WWTP	McCracken	001-1	05/31/2017	Nitrogen, ammonia total [as	00610-1-1	Effluent Gross									0.6	mg/L			mg/L
KY0083755	Timberland Subdivision WWTP	McCracken	001-1	05/31/2017	Nitrogen, ammonia total [as	00610-1-1	Effluent Gross											0.6	mg/L	mg/L
KY0083755	Timberland Subdivision WWTP	McCracken	001-1	10/31/2016	Nitrogen, ammonia total [as	00610-1-1	Effluent Gross		0.043	lb/d			lb/d							
KY0083755	Timberland Subdivision WWTP	McCracken	001-1	10/31/2016	Nitrogen, ammonia total [as	00610-1-1	Effluent Gross				0.043	lb/d	lb/d							
KY0083755	Timberland Subdivision WWTP	McCracken	001-1	10/31/2016	Nitrogen, ammonia total [as	00610-1-1	Effluent Gross	30								2.6	mg/L			mg/L
KY0083755	Timberland Subdivision WWTP	McCracken	001-1	10/31/2016	Nitrogen, ammonia total [as	00610-1-1	Effluent Gross											2.6	mg/L	mg/L
KY0083755	Timberland Subdivision WWTP	McCracken	001-1	09/30/2016	Nitrogen, ammonia total [as	00610-1-1	Effluent Gross		0.06	lb/d			lb/d							
KY0083755	Timberland Subdivision WWTP	McCracken	001-1	09/30/2016	Nitrogen, ammonia total [as	00610-1-1	Effluent Gross				0.06	lb/d	lb/d							
KY0083755	Timberland Subdivision WWTP	McCracken	001-1	09/30/2016	Nitrogen, ammonia total [as	00610-1-1	Effluent Gross	75								3.5	mg/L			mg/L
KY0083755	Timberland Subdivision WWTP	McCracken	001-1	09/30/2016	Nitrogen, ammonia total [as	00610-1-1	Effluent Gross	17										3.5	mg/L	mg/L
KY0083755	Timberland Subdivision WWTP	McCracken	001-1	08/31/2016	Nitrogen, ammonia total [as	00610-1-1	Effluent Gross		0.02	lb/d			lb/d							
KY0083755	Timberland Subdivision WWTP	McCracken	001-1	08/31/2016	Nitrogen, ammonia total [as	00610-1-1	Effluent Gross				0.02	lb/d	lb/d							
KY0083755	Timberland Subdivision WWTP	McCracken	001-1	08/31/2016	Nitrogen, ammonia total [as	00610-1-1	Effluent Gross									1.06	mg/L			mg/L
KY0083755	Timberland Subdivision WWTP	McCracken	001-1	08/31/2016	Nitrogen, ammonia total [as	00610-1-1	Effluent Gross											1.06	mg/L	mg/L
KY0083755	Timberland Subdivision WWTP	McCracken	001-1	07/31/2016	Nitrogen, ammonia total [as	00610-1-1	Effluent Gross		0.02	lb/d			lb/d							
KY0083755	Timberland Subdivision WWTP	McCracken	001-1	07/31/2016	Nitrogen, ammonia total [as	00610-1-1	Effluent Gross				0.02	lb/d	lb/d							
KY0083755	Timberland Subdivision WWTP	McCracken	001-1	07/31/2016	Nitrogen, ammonia total [as	00610-1-1	Effluent Gross									1.42	mg/L			mg/L
KY0083755	Timberland Subdivision WWTP	McCracken	001-1	07/31/2016	Nitrogen, ammonia total [as	00610-1-1	Effluent Gross											1.42	mg/L	mg/L
KY0083755	Timberland Subdivision WWTP	McCracken	001-1	06/30/2016	Nitrogen, ammonia total [as	00610-1-1	Effluent Gross		0.03	lb/d			lb/d							
KY0083755	Timberland Subdivision WWTP	McCracken	001-1	06/30/2016	Nitrogen, ammonia total [as	00610-1-1	Effluent Gross				0.03	lb/d	lb/d							
KY0083755	Timberland Subdivision WWTP	McCracken	001-1	06/30/2016	Nitrogen, ammonia total [as	00610-1-1	Effluent Gross									1.8	mg/L			mg/L
KY0083755	Timberland Subdivision WWTP	McCracken	001-1	06/30/2016	Nitrogen, ammonia total [as	00610-1-1	Effluent Gross											1.8	mg/L	mg/L
KY0083755	Timberland Subdivision WWTP	McCracken	001-1	05/31/2016	Nitrogen, ammonia total [as	00610-1-1	Effluent Gross		0.02	lb/d			lb/d							
KY0083755	Timberland Subdivision WWTP	McCracken	001-1	05/31/2016	Nitrogen, ammonia total [as	00610-1-1	Effluent Gross				0.02	lb/d	lb/d							
KY0083755	Timberland Subdivision WWTP	McCracken	001-1	05/31/2016	Nitrogen, ammonia total [as	00610-1-1	Effluent Gross									1.02	mg/L			mg/L
KY0083755	Timberland Subdivision WWTP	McCracken	001-1	05/31/2016	Nitrogen, ammonia total [as	00610-1-1	Effluent Gross											1.02	mg/L	mg/L
KY0083755	Timberland Subdivision WWTP	McCracken	001-1	02/28/2021	Nitrogen, ammonia total [as	00610-1-2	Effluent Gross									2.5	mg/L			mg/L
KY0083755	Timberland Subdivision WWTP	McCracken	001-1	02/28/2021	Nitrogen, ammonia total [as	00610-1-2	Effluent Gross											2.5	mg/L	mg/L
KY0083755	Timberland Subdivision WWTP	McCracken	001-1	01/31/2021	Nitrogen, ammonia total [as	00610-1-2	Effluent Gross									4	mg/L			mg/L
KY0083755	Timberland Subdivision WWTP	McCracken	001-1	01/31/2021	Nitrogen, ammonia total [as	00610-1-2	Effluent Gross											4	mg/L	mg/L
KY0083755	Timberland Subdivision WWTP	McCracken	001-1	12/31/2020	Nitrogen, ammonia total [as	00610-1-2	Effluent Gross									4.5	mg/L			mg/L
KY0083755	Timberland Subdivision WWTP	McCracken	001-1	12/31/2020	Nitrogen, ammonia total [as	00610-1-2	Effluent Gross											4.5	mg/L	mg/L
KY0083755	Timberland Subdivision WWTP	McCracken	001-1	11/30/2020	Nitrogen, ammonia total [as	00610-1-2	Effluent Gross									4.1	mg/L			mg/L
KY0083755	Timberland Subdivision WWTP	McCracken	001-1	11/30/2020	Nitrogen, ammonia total [as	00610-1-2	Effluent Gross											4.1	mg/L	mg/L
KY0083755	Timberland Subdivision WWTP	McCracken	001-1	04/30/2020	Nitrogen, ammonia total [as	00610-1-2	Effluent Gross									NODI B		NODI B		mg/L
KY0083755	Timberland Subdivision WWTP	McCracken	001-1	03/31/2020	Nitrogen, ammonia total [as	00610-1-2	Effluent Gross									NODI B		NODI B		mg/L
KY0083755	Timberland Subdivision WWTP	McCracken	001-1	02/29/2020	Nitrogen, ammonia total [as	00610-1-2	Effluent Gross									NODI B		NODI B		mg/L
KY0083755	Timberland Subdivision WWTP	McCracken	001-1	01/31/2020	Nitrogen, ammonia total [as	00610-1-2	Effluent Gross		NODI B		NODI B		lb/d							
KY0083755	Timberland Subdivision WWTP	McCracken	001-1	01/31/2020	Nitrogen, ammonia total [as	00610-1-2	Effluent Gross									NODI B		NODI B		mg/L
KY0083755	Timberland Subdivision WWTP	McCracken	001-1	12/31/2019	Nitrogen, ammonia total [as	00610-1-2	Effluent Gross		NODI B		NODI B		lb/d							
KY0083755	Timberland Subdivision WWTP	McCracken	001-1	12/31/2019	Nitrogen, ammonia total [as	00610-1-2	Effluent Gross									NODI B		NODI B		mg/L
KY0083755	Timberland Subdivision WWTP	McCracken	001-1	11/30/2019	Nitrogen, ammonia total [as	00610-1-2	Effluent Gross		0.06	lb/d			lb/d							
KY0083755	Timberland Subdivision WWTP	McCracken	001-1	11/30/2019	Nitrogen, ammonia total [as	00610-1-2	Effluent Gross				0.06	lb/d	lb/d							
KY0083755	Timberland Subdivision WWTP	McCracken	001-1	11/30/2019	Nitrogen, ammonia total [as	00610-1-2	Effluent Gross									0.34	mg/L			mg/L
KY0083755	Timberland Subdivision WWTP	McCracken	001-1	11/30/2019	Nitrogen, ammonia total [as	00610-1-2	Effluent Gross											0.34	mg/L	mg/L
KY0083755	Timberland Subdivision WWTP	McCracken	001-1	04/30/2019	Nitrogen, ammonia total [as	00610-1-2	Effluent Gross		0.041	lb/d			lb/d							
KY0083755	Timberland Subdivision WWTP	McCracken	001-1	04/30/2019	Nitrogen, ammonia total [as	00610-1-2	Effluent Gross				0.041	lb/d	lb/d							
KY0083755	Timberland Subdivision WWTP	McCracken	001-1	04/30/2019	Nitrogen, ammonia total [as	00610-1-2	Effluent Gross									2.47	mg/L			mg/L
KY0083755	Timberland Subdivision WWTP	McCracken	001-1	04/30/2019	Nitrogen, ammonia total [as	00610-1-2	Effluent Gross											2.47	mg/L	mg/L
KY0083755	Timberland Subdivision WWTP	McCracken	001-1	03/31/2019	Nitrogen, ammonia total [as	00610-1-2	Effluent Gross		0.01	lb/d			lb/d							
KY0083755	Timberland Subdivision WWTP	McCracken	001-1	03/31/2019	Nitrogen, ammonia total [as	00610-1-2	Effluent Gross				0.01	lb/d	lb/d							
KY0083755	Timberland Subdivision WWTP	McCracken	001-1	03/31/2019	Nitrogen, ammonia total [as	00610-1-2	Effluent Gross									0.62	mg/L			mg/L
KY0083755	Timberland Subdivision WWTP	McCracken	001-1	03/31/2019	Nitrogen, ammonia total [as	00610-1-2	Effluent Gross											0.62	mg/L	mg/L
KY0083755	Timberland Subdivision WWTP	McCracken	001-1	02/28/2019	Nitrogen, ammonia total [as	00610-1-2	Effluent Gross		0.0166	lb/d			lb/d							
KY0083755	Timberland Subdivision WWTP	McCracken	001-1	02/28/2019	Nitrogen, ammonia total [as	00610-1-2	Effluent Gross				0.0166	lb/d	lb/d							
KY0083755	Timberland Subdivision WWTP	McCracken	001-1	02/28/2019	Nitrogen, ammonia total [as	00610-1-2	Effluent Gross									1	mg/L			mg/L
KY0083755	Timberland Subdivision WWTP	McCracken	001-1	02/28/2019	Nitrogen, ammonia total [as	00610-1-2	Effluent Gross											1	mg/L	mg/L
KY0083755	Timberland Subdivision WWTP	McCracken	001-1	01/31/2019	Nitrogen, ammonia total [as	00610-1-2	Effluent Gross		0.11	lb/d			lb/d							
KY0083755	Timberland Subdivision WWTP	McCracken	001-1	01/31/2019	Nitrogen, ammonia total [as	00610-1-2	Effluent Gross				0.11	lb/d	lb/d							

KY0083755	Timberland Subdivision WWTP	McCracken	001-1	01/31/2019	Nitrogen, ammonia total [as	00610-1-2	Effluent Gross									6.71	mg/L			mg/L
KY0083755	Timberland Subdivision WWTP	McCracken	001-1	01/31/2019	Nitrogen, ammonia total [as	00610-1-2	Effluent Gross											6.71	mg/L	mg/L
KY0083755	Timberland Subdivision WWTP	McCracken	001-1	12/31/2018	Nitrogen, ammonia total [as	00610-1-2	Effluent Gross		0.119	lb/d			lb/d							
KY0083755	Timberland Subdivision WWTP	McCracken	001-1	12/31/2018	Nitrogen, ammonia total [as	00610-1-2	Effluent Gross				0.119	lb/d	lb/d							
KY0083755	Timberland Subdivision WWTP	McCracken	001-1	12/31/2018	Nitrogen, ammonia total [as	00610-1-2	Effluent Gross									7.17	mg/L			mg/L
KY0083755	Timberland Subdivision WWTP	McCracken	001-1	12/31/2018	Nitrogen, ammonia total [as	00610-1-2	Effluent Gross											7.17	mg/L	mg/L
KY0083755	Timberland Subdivision WWTP	McCracken	001-1	11/30/2018	Nitrogen, ammonia total [as	00610-1-2	Effluent Gross		0.05	lb/d			lb/d							
KY0083755	Timberland Subdivision WWTP	McCracken	001-1	11/30/2018	Nitrogen, ammonia total [as	00610-1-2	Effluent Gross				0.05	lb/d	lb/d							
KY0083755	Timberland Subdivision WWTP	McCracken	001-1	11/30/2018	Nitrogen, ammonia total [as	00610-1-2	Effluent Gross									3.12	mg/L			mg/L
KY0083755	Timberland Subdivision WWTP	McCracken	001-1	11/30/2018	Nitrogen, ammonia total [as	00610-1-2	Effluent Gross											3.12	mg/L	mg/L
KY0083755	Timberland Subdivision WWTP	McCracken	001-1	04/30/2018	Nitrogen, ammonia total [as	00610-1-2	Effluent Gross		0.011	lb/d			lb/d							
KY0083755	Timberland Subdivision WWTP	McCracken	001-1	04/30/2018	Nitrogen, ammonia total [as	00610-1-2	Effluent Gross				0.011	lb/d	lb/d							
KY0083755	Timberland Subdivision WWTP	McCracken	001-1	04/30/2018	Nitrogen, ammonia total [as	00610-1-2	Effluent Gross									0.69	mg/L			mg/L
KY0083755	Timberland Subdivision WWTP	McCracken	001-1	04/30/2018	Nitrogen, ammonia total [as	00610-1-2	Effluent Gross											0.69	mg/L	mg/L
KY0083755	Timberland Subdivision WWTP	McCracken	001-1	03/31/2018	Nitrogen, ammonia total [as	00610-1-2	Effluent Gross		0.009	lb/d			lb/d							
KY0083755	Timberland Subdivision WWTP	McCracken	001-1	03/31/2018	Nitrogen, ammonia total [as	00610-1-2	Effluent Gross				0.009	lb/d	lb/d							
KY0083755	Timberland Subdivision WWTP	McCracken	001-1	03/31/2018	Nitrogen, ammonia total [as	00610-1-2	Effluent Gross									0.52	mg/L			mg/L
KY0083755	Timberland Subdivision WWTP	McCracken	001-1	03/31/2018	Nitrogen, ammonia total [as	00610-1-2	Effluent Gross											0.52	mg/L	mg/L
KY0083755	Timberland Subdivision WWTP	McCracken	001-1	02/28/2018	Nitrogen, ammonia total [as	00610-1-2	Effluent Gross		0.005	lb/d			lb/d							
KY0083755	Timberland Subdivision WWTP	McCracken	001-1	02/28/2018	Nitrogen, ammonia total [as	00610-1-2	Effluent Gross				0.005	lb/d	lb/d							
KY0083755	Timberland Subdivision WWTP	McCracken	001-1	02/28/2018	Nitrogen, ammonia total [as	00610-1-2	Effluent Gross									0.34	mg/L			mg/L
KY0083755	Timberland Subdivision WWTP	McCracken	001-1	02/28/2018	Nitrogen, ammonia total [as	00610-1-2	Effluent Gross											0.34	mg/L	mg/L
KY0083755	Timberland Subdivision WWTP	McCracken	001-1	01/31/2018	Nitrogen, ammonia total [as	00610-1-2	Effluent Gross		0.01	lb/d			lb/d							
KY0083755	Timberland Subdivision WWTP	McCracken	001-1	01/31/2018	Nitrogen, ammonia total [as	00610-1-2	Effluent Gross				0.01	lb/d	lb/d							
KY0083755	Timberland Subdivision WWTP	McCracken	001-1	01/31/2018	Nitrogen, ammonia total [as	00610-1-2	Effluent Gross									0.6	mg/L			mg/L
KY0083755	Timberland Subdivision WWTP	McCracken	001-1	01/31/2018	Nitrogen, ammonia total [as	00610-1-2	Effluent Gross											0.6	mg/L	mg/L
KY0083755	Timberland Subdivision WWTP	McCracken	001-1	12/31/2017	Nitrogen, ammonia total [as	00610-1-2	Effluent Gross		0.005	lb/d			lb/d							
KY0083755	Timberland Subdivision WWTP	McCracken	001-1	12/31/2017	Nitrogen, ammonia total [as	00610-1-2	Effluent Gross				0.005	lb/d	lb/d							
KY0083755	Timberland Subdivision WWTP	McCracken	001-1	12/31/2017	Nitrogen, ammonia total [as	00610-1-2	Effluent Gross									0.3	mg/L			mg/L
KY0083755	Timberland Subdivision WWTP	McCracken	001-1	12/31/2017	Nitrogen, ammonia total [as	00610-1-2	Effluent Gross											0.3	mg/L	mg/L
KY0083755	Timberland Subdivision WWTP	McCracken	001-1	11/30/2017	Nitrogen, ammonia total [as	00610-1-2	Effluent Gross		0.03	lb/d			lb/d							
KY0083755	Timberland Subdivision WWTP	McCracken	001-1	11/30/2017	Nitrogen, ammonia total [as	00610-1-2	Effluent Gross				0.03	lb/d	lb/d							
KY0083755	Timberland Subdivision WWTP	McCracken	001-1	11/30/2017	Nitrogen, ammonia total [as	00610-1-2	Effluent Gross									1.72	mg/L			mg/L
KY0083755	Timberland Subdivision WWTP	McCracken	001-1	11/30/2017	Nitrogen, ammonia total [as	00610-1-2	Effluent Gross											1.72	mg/L	mg/L
KY0083755	Timberland Subdivision WWTP	McCracken	001-1	04/30/2017	Nitrogen, ammonia total [as	00610-1-2	Effluent Gross		0.05	lb/d			lb/d							
KY0083755	Timberland Subdivision WWTP	McCracken	001-1	04/30/2017	Nitrogen, ammonia total [as	00610-1-2	Effluent Gross				0.05	lb/d	lb/d							
KY0083755	Timberland Subdivision WWTP	McCracken	001-1	04/30/2017	Nitrogen, ammonia total [as	00610-1-2	Effluent Gross									3.2	mg/L			mg/L
KY0083755	Timberland Subdivision WWTP	McCracken	001-1	04/30/2017	Nitrogen, ammonia total [as	00610-1-2	Effluent Gross											3.2	mg/L	mg/L
KY0083755	Timberland Subdivision WWTP	McCracken	001-1	03/31/2017	Nitrogen, ammonia total [as	00610-1-2	Effluent Gross		0.0007	lb/d			lb/d							
KY0083755	Timberland Subdivision WWTP	McCracken	001-1	03/31/2017	Nitrogen, ammonia total [as	00610-1-2	Effluent Gross				0.0007	lb/d	lb/d							
KY0083755	Timberland Subdivision WWTP	McCracken	001-1	03/31/2017	Nitrogen, ammonia total [as	00610-1-2	Effluent Gross									0.84	mg/L			mg/L
KY0083755	Timberland Subdivision WWTP	McCracken	001-1	03/31/2017	Nitrogen, ammonia total [as	00610-1-2	Effluent Gross											0.84	mg/L	mg/L
KY0083755	Timberland Subdivision WWTP	McCracken	001-1	02/28/2017	Nitrogen, ammonia total [as	00610-1-2	Effluent Gross		0.009	lb/d			lb/d							
KY0083755	Timberland Subdivision WWTP	McCracken	001-1	02/28/2017	Nitrogen, ammonia total [as	00610-1-2	Effluent Gross				0.009	lb/d	lb/d							
KY0083755	Timberland Subdivision WWTP	McCracken	001-1	02/28/2017	Nitrogen, ammonia total [as	00610-1-2	Effluent Gross									0.59	mg/L			mg/L
KY0083755	Timberland Subdivision WWTP	McCracken	001-1	01/31/2017	Nitrogen, ammonia total [as	00610-1-2	Effluent Gross		0.01	lb/d			lb/d							
KY0083755	Timberland Subdivision WWTP	McCracken	001-1	01/31/2017	Nitrogen, ammonia total [as	00610-1-2	Effluent Gross				0.01	lb/d	lb/d							
KY0083755	Timberland Subdivision WWTP	McCracken	001-1	01/31/2017	Nitrogen, ammonia total [as	00610-1-2	Effluent Gross									0.66	mg/L			mg/L
KY0083755	Timberland Subdivision WWTP	McCracken	001-1	01/31/2017	Nitrogen, ammonia total [as	00610-1-2	Effluent Gross											0.66	mg/L	mg/L
KY0083755	Timberland Subdivision WWTP	McCracken	001-1	12/31/2016	Nitrogen, ammonia total [as	00610-1-2	Effluent Gross		0.016	lb/d			lb/d							
KY0083755	Timberland Subdivision WWTP	McCracken	001-1	12/31/2016	Nitrogen, ammonia total [as	00610-1-2	Effluent Gross				0.016	lb/d	lb/d							
KY0083755	Timberland Subdivision WWTP	McCracken	001-1	12/31/2016	Nitrogen, ammonia total [as	00610-1-2	Effluent Gross									1	mg/L			mg/L
KY0083755	Timberland Subdivision WWTP	McCracken	001-1	12/31/2016	Nitrogen, ammonia total [as	00610-1-2	Effluent Gross											1	mg/L	mg/L
KY0083755	Timberland Subdivision WWTP	McCracken	001-1	11/30/2016	Nitrogen, ammonia total [as	00610-1-2	Effluent Gross		0.05	lb/d			lb/d							
KY0083755	Timberland Subdivision WWTP	McCracken	001-1	11/30/2016	Nitrogen, ammonia total [as	00610-1-2	Effluent Gross				0.05	lb/d	lb/d							
KY0083755	Timberland Subdivision WWTP	McCracken	001-1	11/30/2016	Nitrogen, ammonia total [as	00610-1-2	Effluent Gross									3	mg/L			mg/L
KY0083755	Timberland Subdivision WWTP	McCracken	001-1	11/30/2016	Nitrogen, ammonia total [as	00610-1-2	Effluent Gross											3	mg/L	mg/L
KY0083755	Timberland Subdivision WWTP	McCracken	001-1	04/30/2016	Nitrogen, ammonia total [as	00610-1-2	Effluent Gross		0.007	lb/d			lb/d							
KY0083755	Timberland Subdivision WWTP	McCracken	001-1	04/30/2016	Nitrogen, ammonia total [as	00610-1-2	Effluent Gross				0.007	lb/d	lb/d							
KY0083755	Timberland Subdivision WWTP	McCracken	001-1	04/30/2016	Nitrogen, ammonia total [as	00610-1-2	Effluent Gross									0.42	mg/L			mg/L
KY0083755	Timberland Subdivision WWTP	McCracken	001-1	04/30/2016	Nitrogen, ammonia total [as	00610-1-2	Effluent Gross											0.42	mg/L	mg/L
KY0083755	Timberland Subdivision WWTP	McCracken	001-1	03/31/2016	Nitrogen, ammonia total [as	00610-1-2	Effluent Gross		0.008	lb/d			lb/d							
KY0083755	Timberland Subdivision WWTP	McCracken	001-1	03/31/2016	Nitrogen, ammonia total [as	00610-1-2	Effluent Gross				0.008	lb/d	lb/d							
KY0083755	Timberland Subdivision WWTP	McCracken	001-1	03/31/2016	Nitrogen, ammonia total [as	00610-1-2	Effluent Gross									0.46	mg/L			mg/L
KY0083755	Timberland Subdivision WWTP	McCracken	001-1	03/31/2016	Nitrogen, ammonia total [as	00610-1-2	Effluent Gross											0.46	mg/L	mg/L
KY0083755	Timberland Subdivision WWTP	McCracken	001-1	02/29/2016	Nitrogen, ammonia total [as	00610-1-2	Effluent Gross		0.013	lb/d			lb/d							
KY0083755	Timberland Subdivision WWTP	McCracken	001-1	02/29/2016	Nitrogen, ammonia total [as	00610-1-2	Effluent Gross				0.013	lb/d	lb/d							
KY0083755	Timberland Subdivision WWTP	McCracken	001-1	02/29/2016	Nitrogen, ammonia total [as	00610-1-2	Effluent Gross									0.76	mg/L			mg/L
KY0083755	Timberland Subdivision WWTP	McCracken	001-1	02/29/2016	Nitrogen, ammonia total [as	00610-1-2	Effluent Gross											0.76	mg/L	mg/L
KY0083755	Timberland Subdivision WWTP	McCracken	001-1	02/28/2021	Flow, in conduit or thru	50050-1-0	Effluent Gross		0.025	MGD			MGD							
KY0083755	Timberland Subdivision WWTP	McCracken	001-1	02/28/2021	Flow, in conduit or thru	50050-1-0	Effluent Gross				0.025	MGD	MGD							
KY0083755	Timberland Subdivision WWTP	McCracken	001-1	01/31/2021	Flow, in conduit or thru	50050-1-0	Effluent Gross		0.025	MGD			MGD							
KY0083755	Timberland Subdivision WWTP	McCracken	001-1	01/31/2021	Flow, in conduit or thru	50050-1-0	Effluent Gross				0.025	MGD	MGD							
KY0083755	Timberland Subdivision WWTP	McCracken	001-1	12/31/2020	Flow, in conduit or thru	50050-1-0	Effluent Gross		0.025	MGD			MGD							
KY0083755	Timberland Subdivision WWTP	McCracken	001-1	12/31/2020	Flow, in conduit or thru	50050-1-0	Effluent Gross				0.025	MGD	MGD							
KY0083755	Timberland Subdivision WWTP	McCracken	001-1	11/30/2020	Flow, in conduit or thru	50050-1-0	Effluent Gross		0.025	MGD			MGD							
KY0083755	Timberland Subdivision WWTP	McCracken	001-1	11/30/2020	Flow, in conduit or thru	50050-1-0	Effluent Gross				0.025	MGD	MGD							
KY0083755	Timberland Subdivision WWTP	McCracken	001-1	10/31/2020	Flow, in conduit or thru	50050-1-0	Effluent Gross		0.025	MGD			MGD							
KY0083755	Timberland Subdivision WWTP	McCracken	001-1	10/31/2020	Flow, in conduit or thru	50050-1-0	Effluent Gross				0.025	MGD	MGD							
KY0083755	Timberland Subdivision WWTP	McCracken	001-1	09/30/2020	Flow, in conduit or thru	50050-1-0	Effluent Gross		0.025	MGD			MGD							
KY0083755	Timberland Subdivision WWTP	McCracken	001-1	09/30/2020	Flow, in conduit or thru	50050-1-0	Effluent Gross				0.025	MGD	MGD							
KY0083755	Timberland Subdivision WWTP	McCracken	001-1	08/31/2020	Flow, in conduit or thru	50050-1-0	Effluent Gross		0.025	MGD			MGD							
KY0083755	Timberland Subdivision WWTP	McCracken	001-1	08/31/2020	Flow, in conduit or thru	50050-1-0	Effluent Gross				0.025	MGD	MGD							
KY0083755	Timberland Subdivision WWTP	McCracken	001-1	07/31/2020	Flow, in conduit or thru	50050-1-0	Effluent Gross		0.025	MGD			MGD							
KY0083755	Timberland Subdivision WWTP	McCracken	001-1	07/31/2020	Flow, in conduit or thru	50050-1-0	Effluent Gross				0.025	MGD	MGD							
KY0083755	Timberland Subdivision WWTP	McCracken	001-1	06/30/2020	Flow, in conduit or thru	50050-1-0	Effluent Gross		0.025	MGD			MGD							
KY0083755	Timberland Subdivision WWTP	McCracken	001-1	06/30/2020	Flow, in conduit or thru	50050-1-0	Effluent Gross				0.025	MGD	MGD							
KY0083755	Timberland Subdivision WWTP	McCracken	001-1	05/31/2020	Flow, in conduit or thru	50050-1-0	Effluent Gross		0.025	MGD			MGD							
KY0083755	Timberland Subdivision WWTP	McCracken	001-1	05/31/2020	Flow, in conduit or thru	50050-1-0	Effluent Gross				0.025	MGD	MGD							

KY0083755	Timberland Subdivision WWTP	McCracken	001-1	04/30/2020	Flow, in conduit or thru	50050-1-0	Effluent Gross		0.025	MGD			MGD							
KY0083755	Timberland Subdivision WWTP	McCracken	001-1	04/30/2020	Flow, in conduit or thru	50050-1-0	Effluent Gross				0.025	MGD	MGD							
KY0083755	Timberland Subdivision WWTP	McCracken	001-1	03/31/2020	Flow, in conduit or thru	50050-1-0	Effluent Gross		0.002	MGD			MGD							
KY0083755	Timberland Subdivision WWTP	McCracken	001-1	03/31/2020	Flow, in conduit or thru	50050-1-0	Effluent Gross				0.002	MGD	MGD							
KY0083755	Timberland Subdivision WWTP	McCracken	001-1	02/29/2020	Flow, in conduit or thru	50050-1-0	Effluent Gross		0.02	MGD			MGD							
KY0083755	Timberland Subdivision WWTP	McCracken	001-1	02/29/2020	Flow, in conduit or thru	50050-1-0	Effluent Gross				0.02	MGD	MGD							
KY0083755	Timberland Subdivision WWTP	McCracken	001-1	01/31/2020	Flow, in conduit or thru	50050-1-0	Effluent Gross		0.02	MGD			MGD							
KY0083755	Timberland Subdivision WWTP	McCracken	001-1	01/31/2020	Flow, in conduit or thru	50050-1-0	Effluent Gross				0.02	MGD	MGD							
KY0083755	Timberland Subdivision WWTP	McCracken	001-1	12/31/2019	Flow, in conduit or thru	50050-1-0	Effluent Gross		NODI B		NODI B		MGD							
KY0083755	Timberland Subdivision WWTP	McCracken	001-1	11/30/2019	Flow, in conduit or thru	50050-1-0	Effluent Gross		0.02	MGD			MGD							
KY0083755	Timberland Subdivision WWTP	McCracken	001-1	11/30/2019	Flow, in conduit or thru	50050-1-0	Effluent Gross				0.02	MGD	MGD							
KY0083755	Timberland Subdivision WWTP	McCracken	001-1	10/31/2019	Flow, in conduit or thru	50050-1-0	Effluent Gross		0.02	MGD			MGD							
KY0083755	Timberland Subdivision WWTP	McCracken	001-1	10/31/2019	Flow, in conduit or thru	50050-1-0	Effluent Gross				0.02	MGD	MGD							
KY0083755	Timberland Subdivision WWTP	McCracken	001-1	09/30/2019	Flow, in conduit or thru	50050-1-0	Effluent Gross		0.025	MGD			MGD							
KY0083755	Timberland Subdivision WWTP	McCracken	001-1	09/30/2019	Flow, in conduit or thru	50050-1-0	Effluent Gross				0.025	MGD	MGD							
KY0083755	Timberland Subdivision WWTP	McCracken	001-1	08/31/2019	Flow, in conduit or thru	50050-1-0	Effluent Gross		0.025	MGD			MGD							
KY0083755	Timberland Subdivision WWTP	McCracken	001-1	08/31/2019	Flow, in conduit or thru	50050-1-0	Effluent Gross				0.025	MGD	MGD							
KY0083755	Timberland Subdivision WWTP	McCracken	001-1	07/31/2019	Flow, in conduit or thru	50050-1-0	Effluent Gross		0.025	MGD			MGD							
KY0083755	Timberland Subdivision WWTP	McCracken	001-1	07/31/2019	Flow, in conduit or thru	50050-1-0	Effluent Gross				0.025	MGD	MGD							
KY0083755	Timberland Subdivision WWTP	McCracken	001-1	06/30/2019	Flow, in conduit or thru	50050-1-0	Effluent Gross		0.002	MGD			MGD							
KY0083755	Timberland Subdivision WWTP	McCracken	001-1	06/30/2019	Flow, in conduit or thru	50050-1-0	Effluent Gross				0.002	MGD	MGD							
KY0083755	Timberland Subdivision WWTP	McCracken	001-1	05/31/2019	Flow, in conduit or thru	50050-1-0	Effluent Gross		0.002	MGD			MGD							
KY0083755	Timberland Subdivision WWTP	McCracken	001-1	05/31/2019	Flow, in conduit or thru	50050-1-0	Effluent Gross				0.002	MGD	MGD							
KY0083755	Timberland Subdivision WWTP	McCracken	001-1	04/30/2019	Flow, in conduit or thru	50050-1-0	Effluent Gross		0.002	MGD			MGD							
KY0083755	Timberland Subdivision WWTP	McCracken	001-1	04/30/2019	Flow, in conduit or thru	50050-1-0	Effluent Gross				0.002	MGD	MGD							
KY0083755	Timberland Subdivision WWTP	McCracken	001-1	03/31/2019	Flow, in conduit or thru	50050-1-0	Effluent Gross		0.002	MGD			MGD							
KY0083755	Timberland Subdivision WWTP	McCracken	001-1	03/31/2019	Flow, in conduit or thru	50050-1-0	Effluent Gross				0.002	MGD	MGD							
KY0083755	Timberland Subdivision WWTP	McCracken	001-1	02/28/2019	Flow, in conduit or thru	50050-1-0	Effluent Gross		0.002	MGD			MGD							
KY0083755	Timberland Subdivision WWTP	McCracken	001-1	02/28/2019	Flow, in conduit or thru	50050-1-0	Effluent Gross				0.002	MGD	MGD							
KY0083755	Timberland Subdivision WWTP	McCracken	001-1	01/31/2019	Flow, in conduit or thru	50050-1-0	Effluent Gross		0.002	MGD			MGD							
KY0083755	Timberland Subdivision WWTP	McCracken	001-1	01/31/2019	Flow, in conduit or thru	50050-1-0	Effluent Gross				0.002	MGD	MGD							
KY0083755	Timberland Subdivision WWTP	McCracken	001-1	12/31/2018	Flow, in conduit or thru	50050-1-0	Effluent Gross		0.002	MGD			MGD							
KY0083755	Timberland Subdivision WWTP	McCracken	001-1	12/31/2018	Flow, in conduit or thru	50050-1-0	Effluent Gross				0.002	MGD	MGD							
KY0083755	Timberland Subdivision WWTP	McCracken	001-1	11/30/2018	Flow, in conduit or thru	50050-1-0	Effluent Gross		0.002	MGD			MGD							
KY0083755	Timberland Subdivision WWTP	McCracken	001-1	11/30/2018	Flow, in conduit or thru	50050-1-0	Effluent Gross				0.002	MGD	MGD							
KY0083755	Timberland Subdivision WWTP	McCracken	001-1	10/31/2018	Flow, in conduit or thru	50050-1-0	Effluent Gross		0.002	MGD			MGD							
KY0083755	Timberland Subdivision WWTP	McCracken	001-1	10/31/2018	Flow, in conduit or thru	50050-1-0	Effluent Gross				0.002	MGD	MGD							
KY0083755	Timberland Subdivision WWTP	McCracken	001-1	09/30/2018	Flow, in conduit or thru	50050-1-0	Effluent Gross		0.002	MGD			MGD							
KY0083755	Timberland Subdivision WWTP	McCracken	001-1	09/30/2018	Flow, in conduit or thru	50050-1-0	Effluent Gross				0.002	MGD	MGD							
KY0083755	Timberland Subdivision WWTP	McCracken	001-1	08/31/2018	Flow, in conduit or thru	50050-1-0	Effluent Gross		0.002	MGD			MGD							
KY0083755	Timberland Subdivision WWTP	McCracken	001-1	08/31/2018	Flow, in conduit or thru	50050-1-0	Effluent Gross				0.002	MGD	MGD							
KY0083755	Timberland Subdivision WWTP	McCracken	001-1	07/31/2018	Flow, in conduit or thru	50050-1-0	Effluent Gross		0.002	MGD			MGD							
KY0083755	Timberland Subdivision WWTP	McCracken	001-1	07/31/2018	Flow, in conduit or thru	50050-1-0	Effluent Gross				0.002	MGD	MGD							
KY0083755	Timberland Subdivision WWTP	McCracken	001-1	06/30/2018	Flow, in conduit or thru	50050-1-0	Effluent Gross		0.002	MGD			MGD							
KY0083755	Timberland Subdivision WWTP	McCracken	001-1	06/30/2018	Flow, in conduit or thru	50050-1-0	Effluent Gross				0.002	MGD	MGD							
KY0083755	Timberland Subdivision WWTP	McCracken	001-1	05/31/2018	Flow, in conduit or thru	50050-1-0	Effluent Gross		0.002	MGD			MGD							
KY0083755	Timberland Subdivision WWTP	McCracken	001-1	05/31/2018	Flow, in conduit or thru	50050-1-0	Effluent Gross				0.002	MGD	MGD							
KY0083755	Timberland Subdivision WWTP	McCracken	001-1	04/30/2018	Flow, in conduit or thru	50050-1-0	Effluent Gross		0.002	MGD			MGD							
KY0083755	Timberland Subdivision WWTP	McCracken	001-1	04/30/2018	Flow, in conduit or thru	50050-1-0	Effluent Gross				0.002	MGD	MGD							
KY0083755	Timberland Subdivision WWTP	McCracken	001-1	03/31/2018	Flow, in conduit or thru	50050-1-0	Effluent Gross		0.002	MGD			MGD							
KY0083755	Timberland Subdivision WWTP	McCracken	001-1	03/31/2018	Flow, in conduit or thru	50050-1-0	Effluent Gross				0.002	MGD	MGD							
KY0083755	Timberland Subdivision WWTP	McCracken	001-1	02/28/2018	Flow, in conduit or thru	50050-1-0	Effluent Gross		0.002	MGD			MGD							
KY0083755	Timberland Subdivision WWTP	McCracken	001-1	02/28/2018	Flow, in conduit or thru	50050-1-0	Effluent Gross				0.002	MGD	MGD							
KY0083755	Timberland Subdivision WWTP	McCracken	001-1	01/31/2018	Flow, in conduit or thru	50050-1-0	Effluent Gross		0.002	MGD			MGD							
KY0083755	Timberland Subdivision WWTP	McCracken	001-1	01/31/2018	Flow, in conduit or thru	50050-1-0	Effluent Gross				0.002	MGD	MGD							
KY0083755	Timberland Subdivision WWTP	McCracken	001-1	12/31/2017	Flow, in conduit or thru	50050-1-0	Effluent Gross		0.002	MGD			MGD							
KY0083755	Timberland Subdivision WWTP	McCracken	001-1	12/31/2017	Flow, in conduit or thru	50050-1-0	Effluent Gross				0.002	MGD	MGD							
KY0083755	Timberland Subdivision WWTP	McCracken	001-1	11/30/2017	Flow, in conduit or thru	50050-1-0	Effluent Gross		0.002	MGD			MGD							
KY0083755	Timberland Subdivision WWTP	McCracken	001-1	11/30/2017	Flow, in conduit or thru	50050-1-0	Effluent Gross				0.002	MGD	MGD							
KY0083755	Timberland Subdivision WWTP	McCracken	001-1	10/31/2017	Flow, in conduit or thru	50050-1-0	Effluent Gross		0.002	MGD			MGD							
KY0083755	Timberland Subdivision WWTP	McCracken	001-1	10/31/2017	Flow, in conduit or thru	50050-1-0	Effluent Gross				0.002	MGD	MGD							
KY0083755	Timberland Subdivision WWTP	McCracken	001-1	09/30/2017	Flow, in conduit or thru	50050-1-0	Effluent Gross		0.002	MGD			MGD							
KY0083755	Timberland Subdivision WWTP	McCracken	001-1	09/30/2017	Flow, in conduit or thru	50050-1-0	Effluent Gross				0.002	MGD	MGD							
KY0083755	Timberland Subdivision WWTP	McCracken	001-1	08/31/2017	Flow, in conduit or thru	50050-1-0	Effluent Gross		0.002	MGD			MGD							
KY0083755	Timberland Subdivision WWTP	McCracken	001-1	08/31/2017	Flow, in conduit or thru	50050-1-0	Effluent Gross				0.002	MGD	MGD							
KY0083755	Timberland Subdivision WWTP	McCracken	001-1	07/31/2017	Flow, in conduit or thru	50050-1-0	Effluent Gross		0.002	MGD			MGD							
KY0083755	Timberland Subdivision WWTP	McCracken	001-1	07/31/2017	Flow, in conduit or thru	50050-1-0	Effluent Gross				0.002	MGD	MGD							
KY0083755	Timberland Subdivision WWTP	McCracken	001-1	06/30/2017	Flow, in conduit or thru	50050-1-0	Effluent Gross		0.002	MGD			MGD							
KY0083755	Timberland Subdivision WWTP	McCracken	001-1	06/30/2017	Flow, in conduit or thru	50050-1-0	Effluent Gross				0.002	MGD	MGD							
KY0083755	Timberland Subdivision WWTP	McCracken	001-1	05/31/2017	Flow, in conduit or thru	50050-1-0	Effluent Gross		0.002	MGD			MGD							
KY0083755	Timberland Subdivision WWTP	McCracken	001-1	05/31/2017	Flow, in conduit or thru	50050-1-0	Effluent Gross				0.002	MGD	MGD							
KY0083755	Timberland Subdivision WWTP	McCracken	001-1	04/30/2017	Flow, in conduit or thru	50050-1-0	Effluent Gross		0.002	MGD			MGD							
KY0083755	Timberland Subdivision WWTP	McCracken	001-1	04/30/2017	Flow, in conduit or thru	50050-1-0	Effluent Gross				0.002	MGD	MGD							
KY0083755	Timberland Subdivision WWTP	McCracken	001-1	03/31/2017	Flow, in conduit or thru	50050-1-0	Effluent Gross		0.002	MGD			MGD							
KY0083755	Timberland Subdivision WWTP	McCracken	001-1	03/31/2017	Flow, in conduit or thru	50050-1-0	Effluent Gross				0.002	MGD	MGD							
KY0083755	Timberland Subdivision WWTP	McCracken	001-1	02/28/2017	Flow, in conduit or thru	50050-1-0	Effluent Gross		0.002	MGD			MGD							
KY0083755	Timberland Subdivision WWTP	McCracken	001-1	02/28/2017	Flow, in conduit or thru	50050-1-0	Effluent Gross				0.002	MGD	MGD							
KY0083755	Timberland Subdivision WWTP	McCracken	001-1	01/31/2017	Flow, in conduit or thru	50050-1-0	Effluent Gross		0.002	MGD			MGD							
KY0083755	Timberland Subdivision WWTP	McCracken	001-1	01/31/2017	Flow, in conduit or thru	50050-1-0	Effluent Gross				0.002	MGD	MGD							
KY0083755	Timberland Subdivision WWTP	McCracken	001-1	12/31/2016	Flow, in conduit or thru	50050-1-0	Effluent Gross		0.002	MGD			MGD							
KY0083755	Timberland Subdivision WWTP	McCracken	001-1	12/31/2016	Flow, in conduit or thru	50050-1-0	Effluent Gross				0.002	MGD	MGD							
KY0083755	Timberland Subdivision WWTP	McCracken	001-1	11/30/2016	Flow, in conduit or thru	50050-1-0	Effluent Gross		0.002	MGD			MGD							
KY0083755	Timberland Subdivision WWTP	McCracken	001-1	11/30/2016	Flow, in conduit or thru	50050-1-0	Effluent Gross				0.002	MGD	MGD							
KY0083755	Timberland Subdivision WWTP	McCracken	001-1	10/31/2016	Flow, in conduit or thru	50050-1-0	Effluent Gross		0.002	MGD			MGD							
KY0083755	Timberland Subdivision WWTP	McCracken	001-1	10/31/2016	Flow, in conduit or thru	50050-1-0	Effluent Gross				0.002	MGD	MGD							
KY0083755	Timberland Subdivision WWTP	McCracken	001-1	09/30/2016	Flow, in conduit or thru	50050-1-0	Effluent Gross		0.002	MGD			MGD							
KY0083755	Timberland Subdivision WWTP	McCracken	001-1	09/30/2016	Flow, in conduit or thru	50050-1-0	Effluent Gross				0.002	MGD	MGD							
KY0083755	Timberland Subdivision WWTP	McCracken	001-1	08/31/2016	Flow, in conduit or thru	50050-1-0	Effluent Gross		0.002	MGD			MGD							
KY0083755	Timberland Subdivision WWTP	McCracken	001-1	08/31/2016	Flow, in conduit or thru	50050-1-0	Effluent Gross				0.002	MGD	MGD							
KY0083755	Timberland Subdivision WWTP	McCracken	001-1	07/31/2016	Flow, in conduit or thru	50050-1-0	Effluent Gross		0.002	MGD			MGD							

KY0083755	Timberland Subdivision WWTP	McCracken	001-1	07/31/2016	Flow, in conduit or thru	50050-1-0	Effluent Gross				0.002	MGD	MGD							
KY0083755	Timberland Subdivision WWTP	McCracken	001-1	06/30/2016	Flow, in conduit or thru	50050-1-0	Effluent Gross		0.002	MGD			MGD							
KY0083755	Timberland Subdivision WWTP	McCracken	001-1	06/30/2016	Flow, in conduit or thru	50050-1-0	Effluent Gross				0.002	MGD	MGD							
KY0083755	Timberland Subdivision WWTP	McCracken	001-1	05/31/2016	Flow, in conduit or thru	50050-1-0	Effluent Gross		0.002	MGD			MGD							
KY0083755	Timberland Subdivision WWTP	McCracken	001-1	05/31/2016	Flow, in conduit or thru	50050-1-0	Effluent Gross				0.002	MGD	MGD							
KY0083755	Timberland Subdivision WWTP	McCracken	001-1	04/30/2016	Flow, in conduit or thru	50050-1-0	Effluent Gross		0.002	MGD			MGD							
KY0083755	Timberland Subdivision WWTP	McCracken	001-1	04/30/2016	Flow, in conduit or thru	50050-1-0	Effluent Gross				0.002	MGD	MGD							
KY0083755	Timberland Subdivision WWTP	McCracken	001-1	03/31/2016	Flow, in conduit or thru	50050-1-0	Effluent Gross		0.002	MGD			MGD							
KY0083755	Timberland Subdivision WWTP	McCracken	001-1	03/31/2016	Flow, in conduit or thru	50050-1-0	Effluent Gross				0.002	MGD	MGD							
KY0083755	Timberland Subdivision WWTP	McCracken	001-1	02/29/2016	Flow, in conduit or thru	50050-1-0	Effluent Gross		0.002	MGD			MGD							
KY0083755	Timberland Subdivision WWTP	McCracken	001-1	02/29/2016	Flow, in conduit or thru	50050-1-0	Effluent Gross				0.002	MGD	MGD							
KY0083755	Timberland Subdivision WWTP	McCracken	001-1	02/28/2021	Chlorine, total residual	50060-1-0	Effluent Gross	18809								2.08	mg/L			mg/L
KY0083755	Timberland Subdivision WWTP	McCracken	001-1	02/28/2021	Chlorine, total residual	50060-1-0	Effluent Gross	10847										2.08	mg/L	mg/L
KY0083755	Timberland Subdivision WWTP	McCracken	001-1	01/31/2021	Chlorine, total residual	50060-1-0	Effluent Gross	19900								2.2	mg/L			mg/L
KY0083755	Timberland Subdivision WWTP	McCracken	001-1	01/31/2021	Chlorine, total residual	50060-1-0	Effluent Gross	11479										2.2	mg/L	mg/L
KY0083755	Timberland Subdivision WWTP	McCracken	001-1	12/31/2020	Chlorine, total residual	50060-1-0	Effluent Gross	18627								2.06	mg/L			mg/L
KY0083755	Timberland Subdivision WWTP	McCracken	001-1	12/31/2020	Chlorine, total residual	50060-1-0	Effluent Gross	10742										2.06	mg/L	mg/L
KY0083755	Timberland Subdivision WWTP	McCracken	001-1	11/30/2020	Chlorine, total residual	50060-1-0	Effluent Gross	12809								1.42	mg/L			mg/L
KY0083755	Timberland Subdivision WWTP	McCracken	001-1	11/30/2020	Chlorine, total residual	50060-1-0	Effluent Gross	7374										1.42	mg/L	mg/L
KY0083755	Timberland Subdivision WWTP	McCracken	001-1	10/31/2020	Chlorine, total residual	50060-1-0	Effluent Gross	445								0.06	mg/L			mg/L
KY0083755	Timberland Subdivision WWTP	McCracken	001-1	10/31/2020	Chlorine, total residual	50060-1-0	Effluent Gross	216										0.06	mg/L	mg/L
KY0083755	Timberland Subdivision WWTP	McCracken	001-1	09/30/2020	Chlorine, total residual	50060-1-0	Effluent Gross									NODI B		NODI B		mg/L
KY0083755	Timberland Subdivision WWTP	McCracken	001-1	08/31/2020	Chlorine, total residual	50060-1-0	Effluent Gross	10127								1.125	mg/L			mg/L
KY0083755	Timberland Subdivision WWTP	McCracken	001-1	08/31/2020	Chlorine, total residual	50060-1-0	Effluent Gross	11479										2.2	mg/L	mg/L
KY0083755	Timberland Subdivision WWTP	McCracken	001-1	07/31/2020	Chlorine, total residual	50060-1-0	Effluent Gross	19900								2.2	mg/L			mg/L
KY0083755	Timberland Subdivision WWTP	McCracken	001-1	07/31/2020	Chlorine, total residual	50060-1-0	Effluent Gross	11479										2.2	mg/L	mg/L
KY0083755	Timberland Subdivision WWTP	McCracken	001-1	06/30/2020	Chlorine, total residual	50060-1-0	Effluent Gross	173								0.03	mg/L			mg/L
KY0083755	Timberland Subdivision WWTP	McCracken	001-1	06/30/2020	Chlorine, total residual	50060-1-0	Effluent Gross	58										0.03	mg/L	mg/L
KY0083755	Timberland Subdivision WWTP	McCracken	001-1	05/31/2020	Chlorine, total residual	50060-1-0	Effluent Gross	355								0.05	mg/L			mg/L
KY0083755	Timberland Subdivision WWTP	McCracken	001-1	05/31/2020	Chlorine, total residual	50060-1-0	Effluent Gross	163										0.05	mg/L	mg/L
KY0083755	Timberland Subdivision WWTP	McCracken	001-1	04/30/2020	Chlorine, total residual	50060-1-0	Effluent Gross									NODI B		NODI B		mg/L
KY0083755	Timberland Subdivision WWTP	McCracken	001-1	03/31/2020	Chlorine, total residual	50060-1-0	Effluent Gross									NODI B		NODI B		mg/L
KY0083755	Timberland Subdivision WWTP	McCracken	001-1	02/29/2020	Chlorine, total residual	50060-1-0	Effluent Gross									NODI B		NODI B		mg/L
KY0083755	Timberland Subdivision WWTP	McCracken	001-1	01/31/2020	Chlorine, total residual	50060-1-0	Effluent Gross									NODI B		NODI B		mg/L
KY0083755	Timberland Subdivision WWTP	McCracken	001-1	12/31/2019	Chlorine, total residual	50060-1-0	Effluent Gross									NODI B		NODI B		mg/L
KY0083755	Timberland Subdivision WWTP	McCracken	001-1	11/30/2019	Chlorine, total residual	50060-1-0	Effluent Gross									NODI B		NODI B		mg/L
KY0083755	Timberland Subdivision WWTP	McCracken	001-1	10/31/2019	Chlorine, total residual	50060-1-0	Effluent Gross									NODI B		NODI B		mg/L
KY0083755	Timberland Subdivision WWTP	McCracken	001-1	09/30/2019	Chlorine, total residual	50060-1-0	Effluent Gross									NODI B		NODI B		mg/L
KY0083755	Timberland Subdivision WWTP	McCracken	001-1	08/31/2019	Chlorine, total residual	50060-1-0	Effluent Gross									NODI B		NODI B		mg/L
KY0083755	Timberland Subdivision WWTP	McCracken	001-1	07/31/2019	Chlorine, total residual	50060-1-0	Effluent Gross									NODI B		NODI B		mg/L
KY0083755	Timberland Subdivision WWTP	McCracken	001-1	06/30/2019	Chlorine, total residual	50060-1-0	Effluent Gross									NODI B		NODI B		mg/L
KY0083755	Timberland Subdivision WWTP	McCracken	001-1	05/31/2019	Chlorine, total residual	50060-1-0	Effluent Gross									NODI B		NODI B		mg/L
KY0083755	Timberland Subdivision WWTP	McCracken	001-1	04/30/2019	Chlorine, total residual	50060-1-0	Effluent Gross									NODI B		NODI B		mg/L
KY0083755	Timberland Subdivision WWTP	McCracken	001-1	03/31/2019	Chlorine, total residual	50060-1-0	Effluent Gross									NODI B		NODI B		mg/L
KY0083755	Timberland Subdivision WWTP	McCracken	001-1	02/28/2019	Chlorine, total residual	50060-1-0	Effluent Gross									NODI B		NODI B		mg/L
KY0083755	Timberland Subdivision WWTP	McCracken	001-1	01/31/2019	Chlorine, total residual	50060-1-0	Effluent Gross									NODI B		NODI B		mg/L
KY0083755	Timberland Subdivision WWTP	McCracken	001-1	12/31/2018	Chlorine, total residual	50060-1-0	Effluent Gross									NODI B		NODI B		mg/L
KY0083755	Timberland Subdivision WWTP	McCracken	001-1	11/30/2018	Chlorine, total residual	50060-1-0	Effluent Gross									NODI B		NODI B		mg/L
KY0083755	Timberland Subdivision WWTP	McCracken	001-1	10/31/2018	Chlorine, total residual	50060-1-0	Effluent Gross									NODI B		NODI B		mg/L
KY0083755	Timberland Subdivision WWTP	McCracken	001-1	09/30/2018	Chlorine, total residual	50060-1-0	Effluent Gross									NODI B		NODI B		mg/L
KY0083755	Timberland Subdivision WWTP	McCracken	001-1	08/31/2018	Chlorine, total residual	50060-1-0	Effluent Gross									NODI B		NODI B		mg/L
KY0083755	Timberland Subdivision WWTP	McCracken	001-1	07/31/2018	Chlorine, total residual	50060-1-0	Effluent Gross									NODI B		NODI B		mg/L
KY0083755	Timberland Subdivision WWTP	McCracken	001-1	06/30/2018	Chlorine, total residual	50060-1-0	Effluent Gross									NODI B		NODI B		mg/L
KY0083755	Timberland Subdivision WWTP	McCracken	001-1	05/31/2018	Chlorine, total residual	50060-1-0	Effluent Gross									NODI B		NODI B		mg/L
KY0083755	Timberland Subdivision WWTP	McCracken	001-1	04/30/2018	Chlorine, total residual	50060-1-0	Effluent Gross									NODI B		NODI B		mg/L
KY0083755	Timberland Subdivision WWTP	McCracken	001-1	03/31/2018	Chlorine, total residual	50060-1-0	Effluent Gross									NODI B		NODI B		mg/L
KY0083755	Timberland Subdivision WWTP	McCracken	001-1	02/28/2018	Chlorine, total residual	50060-1-0	Effluent Gross									NODI B		NODI B		mg/L
KY0083755	Timberland Subdivision WWTP	McCracken	001-1	01/31/2018	Chlorine, total residual	50060-1-0	Effluent Gross									NODI B		NODI B		mg/L
KY0083755	Timberland Subdivision WWTP	McCracken	001-1	12/31/2017	Chlorine, total residual	50060-1-0	Effluent Gross									NODI B		NODI B		mg/L
KY0083755	Timberland Subdivision WWTP	McCracken	001-1	11/30/2017	Chlorine, total residual	50060-1-0	Effluent Gross									NODI B		NODI B		mg/L
KY0083755	Timberland Subdivision WWTP	McCracken	001-1	10/31/2017	Chlorine, total residual	50060-1-0	Effluent Gross									NODI B		NODI B		mg/L
KY0083755	Timberland Subdivision WWTP	McCracken	001-1	09/30/2017	Chlorine, total residual	50060-1-0	Effluent Gross									NODI B		NODI B		mg/L
KY0083755	Timberland Subdivision WWTP	McCracken	001-1	08/31/2017	Chlorine, total residual	50060-1-0	Effluent Gross									NODI B		NODI B		mg/L
KY0083755	Timberland Subdivision WWTP	McCracken	001-1	07/31/2017	Chlorine, total residual	50060-1-0	Effluent Gross									NODI B		NODI B		mg/L
KY0083755	Timberland Subdivision WWTP	McCracken	001-1	06/30/2017	Chlorine, total residual	50060-1-0	Effluent Gross									NODI B		NODI B		mg/L
KY0083755	Timberland Subdivision WWTP	McCracken	001-1	05/31/2017	Chlorine, total residual	50060-1-0	Effluent Gross									NODI B		NODI B		mg/L
KY0083755	Timberland Subdivision WWTP	McCracken	001-1	04/30/2017	Chlorine, total residual	50060-1-0	Effluent Gross									NODI B		NODI B		mg/L
KY0083755	Timberland Subdivision WWTP	McCracken	001-1	03/31/2017	Chlorine, total residual	50060-1-0	Effluent Gross									NODI B		NODI B		mg/L
KY0083755	Timberland Subdivision WWTP	McCracken	001-1	02/28/2017	Chlorine, total residual	50060-1-0	Effluent Gross									NODI B		NODI B		mg/L
KY0083755	Timberland Subdivision WWTP	McCracken	001-1	01/31/2017	Chlorine, total residual	50060-1-0	Effluent Gross									NODI B		NODI B		mg/L
KY0083755	Timberland Subdivision WWTP	McCracken	001-1	12/31/2016	Chlorine, total residual	50060-1-0	Effluent Gross									NODI B		NODI B		mg/L
KY0083755	Timberland Subdivision WWTP	McCracken	001-1	11/30/2016	Chlorine, total residual	50060-1-0	Effluent Gross									NODI B		NODI B		mg/L
KY0083755	Timberland Subdivision WWTP	McCracken	001-1	10/31/2016	Chlorine, total residual	50060-1-0	Effluent Gross									NODI B		NODI B		mg/L
KY0083755	Timberland Subdivision WWTP	McCracken	001-1	09/30/2016	Chlorine, total residual	50060-1-0	Effluent Gross									NODI B		NODI B		mg/L
KY0083755	Timberland Subdivision WWTP	McCracken	001-1	08/31/2016	Chlorine, total residual	50060-1-0	Effluent Gross									NODI B		NODI B		mg/L
KY0083755	Timberland Subdivision WWTP	McCracken	001-1	07/31/2016	Chlorine, total residual	50060-1-0	Effluent Gross									NODI B		NODI B		mg/L
KY0083755	Timberland Subdivision WWTP	McCracken	001-1	06/30/2016	Chlorine, total residual	50060-1-0	Effluent Gross									NODI B		NODI B		mg/L
KY0083755	Timberland Subdivision WWTP	McCracken	001-1	05/31/2016	Chlorine, total residual	50060-1-0	Effluent Gross									NODI B		NODI B		mg/L
KY0083755	Timberland Subdivision WWTP	McCracken	001-1	04/30/2016	Chlorine, total residual	50060-1-0	Effluent Gross									NODI B		NODI B		mg/L
KY0083755	Timberland Subdivision WWTP	McCracken	001-1	03/31/2016	Chlorine, total residual	50060-1-0	Effluent Gross									NODI B		NODI B		mg/L
KY0083755	Timberland Subdivision WWTP	McCracken	001-1	02/29/2016	Chlorine, total residual	50060-1-0	Effluent Gross									NODI B		NODI B		mg/L
KY0083755	Timberland Subdivision WWTP	McCracken	001-1	02/28/2021	E. coli	51040-1-0	Effluent Gross									2	#/100mL			#/100mL
KY0083755	Timberland Subdivision WWTP	McCracken	001-1	02/28/2021	E. coli	51040-1-0	Effluent Gross											2	#/100mL	#/100mL
KY0083755	Timberland Subdivision WWTP	McCracken	001-1	01/31/2021	E. coli	51040-1-0	Effluent Gross									1	#/100mL			#/100mL
KY0083755	Timberland Subdivision WWTP	McCracken	001-1	01/31/2021	E. coli	51040-1-0	Effluent Gross											1	#/100mL	#/100mL
KY0083755	Timberland Subdivision WWTP	McCracken	001-1	12/31/2020	E. coli	51040-1-0	Effluent Gross									1	#/100mL			#/100mL
KY0083755	Timberland Subdivision WWTP	McCracken	001-1	12/31/2020	E. coli	51040-1-0	Effluent Gross											1	#/100mL	#/100mL
KY0083755	Timberland Subdivision WWTP	McCracken	001-1	11/30/2020	E. coli	51040-1-0	Effluent Gross									70	#/100mL			#/100mL
KY0083755	Timberland Subdivision WWTP	McCracken	001-1	11/30/2020	E. coli	51040-1-0	Effluent Gross											70	#/100mL	#/100mL
KY0083755	Timberland Subdivision WWTP	McCracken	001-1	10/31/2020	E. coli	51040-1-0	Effluent Gross	46054								60000	#/100mL			#/100mL

KY0083755	Timberland Subdivision WWTP	McCracken	001-1	10/31/2020	E. coli	51040-1-0	Effluent Gross	24900										60000	#/100mL	#/100mL
KY0083755	Timberland Subdivision WWTP	McCracken	001-1	09/30/2020	E. coli	51040-1-0	Effluent Gross	46054								60000	#/100mL			#/100mL
KY0083755	Timberland Subdivision WWTP	McCracken	001-1	09/30/2020	E. coli	51040-1-0	Effluent Gross	24900										60000	#/100mL	#/100mL
KY0083755	Timberland Subdivision WWTP	McCracken	001-1	08/31/2020	E. coli	51040-1-0	Effluent Gross									3	#/100mL			#/100mL
KY0083755	Timberland Subdivision WWTP	McCracken	001-1	08/31/2020	E. coli	51040-1-0	Effluent Gross											8	#/100mL	#/100mL
KY0083755	Timberland Subdivision WWTP	McCracken	001-1	07/31/2020	E. coli	51040-1-0	Effluent Gross									2	#/100mL			#/100mL
KY0083755	Timberland Subdivision WWTP	McCracken	001-1	07/31/2020	E. coli	51040-1-0	Effluent Gross											2	#/100mL	#/100mL
KY0083755	Timberland Subdivision WWTP	McCracken	001-1	06/30/2020	E. coli	51040-1-0	Effluent Gross	46054								60000	#/100mL			#/100mL
KY0083755	Timberland Subdivision WWTP	McCracken	001-1	06/30/2020	E. coli	51040-1-0	Effluent Gross	24900										60000	#/100mL	#/100mL
KY0083755	Timberland Subdivision WWTP	McCracken	001-1	05/31/2020	E. coli	51040-1-0	Effluent Gross	46054								60000	#/100mL			#/100mL
KY0083755	Timberland Subdivision WWTP	McCracken	001-1	05/31/2020	E. coli	51040-1-0	Effluent Gross	24900										60000	#/100mL	#/100mL
KY0083755	Timberland Subdivision WWTP	McCracken	001-1	04/30/2020	E. coli	51040-1-0	Effluent Gross									NODI B		NODI B		#/100mL
KY0083755	Timberland Subdivision WWTP	McCracken	001-1	03/31/2020	E. coli	51040-1-0	Effluent Gross									NODI B		NODI B		#/100mL
KY0083755	Timberland Subdivision WWTP	McCracken	001-1	02/29/2020	E. coli	51040-1-0	Effluent Gross									NODI B		NODI B		#/100mL
KY0083755	Timberland Subdivision WWTP	McCracken	001-1	01/31/2020	E. coli	51040-1-0	Effluent Gross									NODI B		NODI B		#/100mL
KY0083755	Timberland Subdivision WWTP	McCracken	001-1	12/31/2019	E. coli	51040-1-0	Effluent Gross									NODI B		NODI B		#/100mL
KY0083755	Timberland Subdivision WWTP	McCracken	001-1	11/30/2019	E. coli	51040-1-0	Effluent Gross									NODI B		NODI B		#/100mL
KY0083755	Timberland Subdivision WWTP	McCracken	001-1	10/31/2019	E. coli	51040-1-0	Effluent Gross									NODI B		NODI B		#/100mL
KY0083755	Timberland Subdivision WWTP	McCracken	001-1	09/30/2019	E. coli	51040-1-0	Effluent Gross									NODI B		NODI B		#/100mL
KY0083755	Timberland Subdivision WWTP	McCracken	001-1	08/31/2019	E. coli	51040-1-0	Effluent Gross									NODI B		NODI B		#/100mL
KY0083755	Timberland Subdivision WWTP	McCracken	001-1	07/31/2019	E. coli	51040-1-0	Effluent Gross									59	#/100mL			#/100mL
KY0083755	Timberland Subdivision WWTP	McCracken	001-1	07/31/2019	E. coli	51040-1-0	Effluent Gross											59	#/100mL	#/100mL
KY0083755	Timberland Subdivision WWTP	McCracken	001-1	06/30/2019	E. coli	51040-1-0	Effluent Gross									3	#/100mL			#/100mL
KY0083755	Timberland Subdivision WWTP	McCracken	001-1	06/30/2019	E. coli	51040-1-0	Effluent Gross											3	#/100mL	#/100mL
KY0083755	Timberland Subdivision WWTP	McCracken	001-1	05/31/2019	E. coli	51040-1-0	Effluent Gross									NODI B		NODI B		#/100mL
KY0083755	Timberland Subdivision WWTP	McCracken	001-1	04/30/2019	E. coli	51040-1-0	Effluent Gross									NODI B		NODI B		#/100mL
KY0083755	Timberland Subdivision WWTP	McCracken	001-1	03/31/2019	E. coli	51040-1-0	Effluent Gross									NODI B		NODI B		#/100mL
KY0083755	Timberland Subdivision WWTP	McCracken	001-1	02/28/2019	E. coli	51040-1-0	Effluent Gross									1	#/100mL			#/100mL
KY0083755	Timberland Subdivision WWTP	McCracken	001-1	02/28/2019	E. coli	51040-1-0	Effluent Gross											1	#/100mL	#/100mL
KY0083755	Timberland Subdivision WWTP	McCracken	001-1	01/31/2019	E. coli	51040-1-0	Effluent Gross									NODI B		NODI B		#/100mL
KY0083755	Timberland Subdivision WWTP	McCracken	001-1	12/31/2018	E. coli	51040-1-0	Effluent Gross									NODI B		NODI B		#/100mL
KY0083755	Timberland Subdivision WWTP	McCracken	001-1	11/30/2018	E. coli	51040-1-0	Effluent Gross									NODI B		NODI B		#/100mL
KY0083755	Timberland Subdivision WWTP	McCracken	001-1	10/31/2018	E. coli	51040-1-0	Effluent Gross									NODI B		NODI B		#/100mL
KY0083755	Timberland Subdivision WWTP	McCracken	001-1	09/30/2018	E. coli	51040-1-0	Effluent Gross									NODI B		NODI B		#/100mL
KY0083755	Timberland Subdivision WWTP	McCracken	001-1	08/31/2018	E. coli	51040-1-0	Effluent Gross									2	#/100mL			#/100mL
KY0083755	Timberland Subdivision WWTP	McCracken	001-1	08/31/2018	E. coli	51040-1-0	Effluent Gross											2	#/100mL	#/100mL
KY0083755	Timberland Subdivision WWTP	McCracken	001-1	07/31/2018	E. coli	51040-1-0	Effluent Gross									NODI B		NODI B		#/100mL
KY0083755	Timberland Subdivision WWTP	McCracken	001-1	06/30/2018	E. coli	51040-1-0	Effluent Gross									NODI B		NODI B		#/100mL
KY0083755	Timberland Subdivision WWTP	McCracken	001-1	05/31/2018	E. coli	51040-1-0	Effluent Gross									2	#/100mL			#/100mL
KY0083755	Timberland Subdivision WWTP	McCracken	001-1	05/31/2018	E. coli	51040-1-0	Effluent Gross											2	#/100mL	#/100mL
KY0083755	Timberland Subdivision WWTP	McCracken	001-1	04/30/2018	E. coli	51040-1-0	Effluent Gross									2	#/100mL			#/100mL
KY0083755	Timberland Subdivision WWTP	McCracken	001-1	04/30/2018	E. coli	51040-1-0	Effluent Gross											2	#/100mL	#/100mL
KY0083755	Timberland Subdivision WWTP	McCracken	001-1	03/31/2018	E. coli	51040-1-0	Effluent Gross									NODI B		NODI B		#/100mL
KY0083755	Timberland Subdivision WWTP	McCracken	001-1	02/28/2018	E. coli	51040-1-0	Effluent Gross									NODI B		NODI B		#/100mL
KY0083755	Timberland Subdivision WWTP	McCracken	001-1	01/31/2018	E. coli	51040-1-0	Effluent Gross									NODI B		NODI B		#/100mL
KY0083755	Timberland Subdivision WWTP	McCracken	001-1	12/31/2017	E. coli	51040-1-0	Effluent Gross									6	#/100mL			#/100mL
KY0083755	Timberland Subdivision WWTP	McCracken	001-1	12/31/2017	E. coli	51040-1-0	Effluent Gross											6	#/100mL	#/100mL
KY0083755	Timberland Subdivision WWTP	McCracken	001-1	11/30/2017	E. coli	51040-1-0	Effluent Gross									NODI B		NODI B		#/100mL
KY0083755	Timberland Subdivision WWTP	McCracken	001-1	10/31/2017	E. coli	51040-1-0	Effluent Gross									NODI B		NODI B		#/100mL
KY0083755	Timberland Subdivision WWTP	McCracken	001-1	09/30/2017	E. coli	51040-1-0	Effluent Gross									NODI B		NODI B		#/100mL
KY0083755	Timberland Subdivision WWTP	McCracken	001-1	08/31/2017	E. coli	51040-1-0	Effluent Gross									2	#/100mL			#/100mL
KY0083755	Timberland Subdivision WWTP	McCracken	001-1	08/31/2017	E. coli	51040-1-0	Effluent Gross											2	#/100mL	#/100mL
KY0083755	Timberland Subdivision WWTP	McCracken	001-1	07/31/2017	E. coli	51040-1-0	Effluent Gross									NODI B		NODI B		#/100mL
KY0083755	Timberland Subdivision WWTP	McCracken	001-1	06/30/2017	E. coli	51040-1-0	Effluent Gross									NODI B		NODI B		#/100mL
KY0083755	Timberland Subdivision WWTP	McCracken	001-1	05/31/2017	E. coli	51040-1-0	Effluent Gross									NODI B		NODI B		#/100mL
KY0083755	Timberland Subdivision WWTP	McCracken	001-1	04/30/2017	E. coli	51040-1-0	Effluent Gross									NODI B		NODI B		#/100mL
KY0083755	Timberland Subdivision WWTP	McCracken	001-1	03/31/2017	E. coli	51040-1-0	Effluent Gross									NODI B		NODI B		#/100mL
KY0083755	Timberland Subdivision WWTP	McCracken	001-1	02/28/2017	E. coli	51040-1-0	Effluent Gross									NODI B		NODI B		#/100mL
KY0083755	Timberland Subdivision WWTP	McCracken	001-1	01/31/2017	E. coli	51040-1-0	Effluent Gross									NODI B		NODI B		#/100mL
KY0083755	Timberland Subdivision WWTP	McCracken	001-1	12/31/2016	E. coli	51040-1-0	Effluent Gross									1	#/100mL			#/100mL
KY0083755	Timberland Subdivision WWTP	McCracken	001-1	12/31/2016	E. coli	51040-1-0	Effluent Gross											1	#/100mL	#/100mL
KY0083755	Timberland Subdivision WWTP	McCracken	001-1	11/30/2016	E. coli	51040-1-0	Effluent Gross									NODI B		NODI B		#/100mL
KY0083755	Timberland Subdivision WWTP	McCracken	001-1	10/31/2016	E. coli	51040-1-0	Effluent Gross									NODI B		NODI B		#/100mL
KY0083755	Timberland Subdivision WWTP	McCracken	001-1	09/30/2016	E. coli	51040-1-0	Effluent Gross									NODI B		NODI B		#/100mL
KY0083755	Timberland Subdivision WWTP	McCracken	001-1	08/31/2016	E. coli	51040-1-0	Effluent Gross									NODI B		NODI B		#/100mL
KY0083755	Timberland Subdivision WWTP	McCracken	001-1	07/31/2016	E. coli	51040-1-0	Effluent Gross									NODI B		NODI B		#/100mL
KY0083755	Timberland Subdivision WWTP	McCracken	001-1	06/30/2016	E. coli	51040-1-0	Effluent Gross									109	#/100mL			#/100mL
KY0083755	Timberland Subdivision WWTP	McCracken	001-1	06/30/2016	E. coli	51040-1-0	Effluent Gross											109	#/100mL	#/100mL
KY0083755	Timberland Subdivision WWTP	McCracken	001-1	05/31/2016	E. coli	51040-1-0	Effluent Gross									NODI B		NODI B		#/100mL
KY0083755	Timberland Subdivision WWTP	McCracken	001-1	04/30/2016	E. coli	51040-1-0	Effluent Gross									NODI B		NODI B		#/100mL
KY0083755	Timberland Subdivision WWTP	McCracken	001-1	03/31/2016	E. coli	51040-1-0	Effluent Gross									NODI B		NODI B		#/100mL
KY0083755	Timberland Subdivision WWTP	McCracken	001-1	02/29/2016	E. coli	51040-1-0	Effluent Gross									82	#/100mL			#/100mL
KY0083755	Timberland Subdivision WWTP	McCracken	001-1	02/29/2016	E. coli	51040-1-0	Effluent Gross											82	#/100mL	#/100mL
KY0083755	Timberland Subdivision WWTP	McCracken	001-1	02/28/2021	BOD, carbonaceous [5 day,	80082-1-0	Effluent Gross	110								21	mg/L			mg/L
KY0083755	Timberland Subdivision WWTP	McCracken	001-1	02/28/2021	BOD, carbonaceous [5 day,	80082-1-0	Effluent Gross	40										21	mg/L	mg/L
KY0083755	Timberland Subdivision WWTP	McCracken	001-1	01/31/2021	BOD, carbonaceous [5 day,	80082-1-0	Effluent Gross									< 5	mg/L			mg/L
KY0083755	Timberland Subdivision WWTP	McCracken	001-1	01/31/2021	BOD, carbonaceous [5 day,	80082-1-0	Effluent Gross											< 5	mg/L	mg/L
KY0083755	Timberland Subdivision WWTP	McCracken	001-1	12/31/2020	BOD, carbonaceous [5 day,	80082-1-0	Effluent Gross									< 5	mg/L			mg/L
KY0083755	Timberland Subdivision WWTP	McCracken	001-1	12/31/2020	BOD, carbonaceous [5 day,	80082-1-0	Effluent Gross											< 5	mg/L	mg/L
KY0083755	Timberland Subdivision WWTP	McCracken	001-1	11/30/2020	BOD, carbonaceous [5 day,	80082-1-0	Effluent Gross									10	mg/L			mg/L
KY0083755	Timberland Subdivision WWTP	McCracken	001-1	11/30/2020	BOD, carbonaceous [5 day,	80082-1-0	Effluent Gross											10	mg/L	mg/L
KY0083755	Timberland Subdivision WWTP	McCracken	001-1	10/31/2020	BOD, carbonaceous [5 day,	80082-1-0	Effluent Gross									< 5	mg/L			mg/L
KY0083755	Timberland Subdivision WWTP	McCracken	001-1	10/31/2020	BOD, carbonaceous [5 day,	80082-1-0	Effluent Gross											< 5	mg/L	mg/L
KY0083755	Timberland Subdivision WWTP	McCracken	001-1	09/30/2020	BOD, carbonaceous [5 day,	80082-1-0	Effluent Gross									< 8	mg/L			mg/L
KY0083755	Timberland Subdivision WWTP	McCracken	001-1	09/30/2020	BOD, carbonaceous [5 day,	80082-1-0	Effluent Gross											9	mg/L	mg/L
KY0083755	Timberland Subdivision WWTP	McCracken	001-1	08/31/2020	BOD, carbonaceous [5 day,	80082-1-0	Effluent Gross									7	mg/L			mg/L
KY0083755	Timberland Subdivision WWTP	McCracken	001-1	08/31/2020	BOD, carbonaceous [5 day,	80082-1-0	Effluent Gross											7	mg/L	mg/L
KY0083755	Timberland Subdivision WWTP	McCracken	001-1	07/31/2020	BOD, carbonaceous [5 day,	80082-1-0	Effluent Gross									8	mg/L			mg/L
KY0083755	Timberland Subdivision WWTP	McCracken	001-1	07/31/2020	BOD, carbonaceous [5 day,	80082-1-0	Effluent Gross											8	mg/L	mg/L
KY0083755	Timberland Subdivision WWTP	McCracken	001-1	06/30/2020	BOD, carbonaceous [5 day,	80082-1-0	Effluent Gross									7	mg/L			mg/L

KY0083755	Timberland Subdivision WWTP	McCracken	001-1	06/30/2020	BOD, carbonaceous [5 day,	80082-1-0	Effluent Gross											7	mg/L	mg/L
KY0083755	Timberland Subdivision WWTP	McCracken	001-1	05/31/2020	BOD, carbonaceous [5 day,	80082-1-0	Effluent Gross	10									11	mg/L			mg/L
KY0083755	Timberland Subdivision WWTP	McCracken	001-1	05/31/2020	BOD, carbonaceous [5 day,	80082-1-0	Effluent Gross												11	mg/L	mg/L
KY0083755	Timberland Subdivision WWTP	McCracken	001-1	04/30/2020	BOD, carbonaceous [5 day,	80082-1-0	Effluent Gross										3	mg/L			mg/L
KY0083755	Timberland Subdivision WWTP	McCracken	001-1	04/30/2020	BOD, carbonaceous [5 day,	80082-1-0	Effluent Gross												3	mg/L	mg/L
KY0083755	Timberland Subdivision WWTP	McCracken	001-1	03/31/2020	BOD, carbonaceous [5 day,	80082-1-0	Effluent Gross	60									16	mg/L			mg/L
KY0083755	Timberland Subdivision WWTP	McCracken	001-1	03/31/2020	BOD, carbonaceous [5 day,	80082-1-0	Effluent Gross	7											16	mg/L	mg/L
KY0083755	Timberland Subdivision WWTP	McCracken	001-1	02/29/2020	BOD, carbonaceous [5 day,	80082-1-0	Effluent Gross	60									16	mg/L			mg/L
KY0083755	Timberland Subdivision WWTP	McCracken	001-1	02/29/2020	BOD, carbonaceous [5 day,	80082-1-0	Effluent Gross	7											16	mg/L	mg/L
KY0083755	Timberland Subdivision WWTP	McCracken	001-1	01/31/2020	BOD, carbonaceous [5 day,	80082-1-0	Effluent Gross		1.33	lb/d			lb/d								
KY0083755	Timberland Subdivision WWTP	McCracken	001-1	01/31/2020	BOD, carbonaceous [5 day,	80082-1-0	Effluent Gross				1.33	lb/d	lb/d								
KY0083755	Timberland Subdivision WWTP	McCracken	001-1	01/31/2020	BOD, carbonaceous [5 day,	80082-1-0	Effluent Gross										8	mg/L			mg/L
KY0083755	Timberland Subdivision WWTP	McCracken	001-1	01/31/2020	BOD, carbonaceous [5 day,	80082-1-0	Effluent Gross												8	mg/L	mg/L
KY0083755	Timberland Subdivision WWTP	McCracken	001-1	12/31/2019	BOD, carbonaceous [5 day,	80082-1-0	Effluent Gross		NODI B		NODI B		lb/d								
KY0083755	Timberland Subdivision WWTP	McCracken	001-1	12/31/2019	BOD, carbonaceous [5 day,	80082-1-0	Effluent Gross										NODI B		NODI B		mg/L
KY0083755	Timberland Subdivision WWTP	McCracken	001-1	11/30/2019	BOD, carbonaceous [5 day,	80082-1-0	Effluent Gross		NODI B		NODI B		lb/d								
KY0083755	Timberland Subdivision WWTP	McCracken	001-1	11/30/2019	BOD, carbonaceous [5 day,	80082-1-0	Effluent Gross										NODI B		NODI B		mg/L
KY0083755	Timberland Subdivision WWTP	McCracken	001-1	10/31/2019	BOD, carbonaceous [5 day,	80082-1-0	Effluent Gross		NODI B		NODI B		lb/d								
KY0083755	Timberland Subdivision WWTP	McCracken	001-1	10/31/2019	BOD, carbonaceous [5 day,	80082-1-0	Effluent Gross										NODI B		NODI B		mg/L
KY0083755	Timberland Subdivision WWTP	McCracken	001-1	09/30/2019	BOD, carbonaceous [5 day,	80082-1-0	Effluent Gross		0.63	lb/d			lb/d								
KY0083755	Timberland Subdivision WWTP	McCracken	001-1	09/30/2019	BOD, carbonaceous [5 day,	80082-1-0	Effluent Gross				0.63	lb/d	lb/d								
KY0083755	Timberland Subdivision WWTP	McCracken	001-1	09/30/2019	BOD, carbonaceous [5 day,	80082-1-0	Effluent Gross										3	mg/L			mg/L
KY0083755	Timberland Subdivision WWTP	McCracken	001-1	09/30/2019	BOD, carbonaceous [5 day,	80082-1-0	Effluent Gross												3	mg/L	mg/L
KY0083755	Timberland Subdivision WWTP	McCracken	001-1	08/31/2019	BOD, carbonaceous [5 day,	80082-1-0	Effluent Gross		0.63	lb/d			lb/d								
KY0083755	Timberland Subdivision WWTP	McCracken	001-1	08/31/2019	BOD, carbonaceous [5 day,	80082-1-0	Effluent Gross				0.63	lb/d	lb/d								
KY0083755	Timberland Subdivision WWTP	McCracken	001-1	08/31/2019	BOD, carbonaceous [5 day,	80082-1-0	Effluent Gross										3	mg/L			mg/L
KY0083755	Timberland Subdivision WWTP	McCracken	001-1	08/31/2019	BOD, carbonaceous [5 day,	80082-1-0	Effluent Gross												3	mg/L	mg/L
KY0083755	Timberland Subdivision WWTP	McCracken	001-1	07/31/2019	BOD, carbonaceous [5 day,	80082-1-0	Effluent Gross		0.625	lb/d			lb/d								
KY0083755	Timberland Subdivision WWTP	McCracken	001-1	07/31/2019	BOD, carbonaceous [5 day,	80082-1-0	Effluent Gross				0.625	lb/d	lb/d								
KY0083755	Timberland Subdivision WWTP	McCracken	001-1	07/31/2019	BOD, carbonaceous [5 day,	80082-1-0	Effluent Gross										3	mg/L			mg/L
KY0083755	Timberland Subdivision WWTP	McCracken	001-1	07/31/2019	BOD, carbonaceous [5 day,	80082-1-0	Effluent Gross												3	mg/L	mg/L
KY0083755	Timberland Subdivision WWTP	McCracken	001-1	06/30/2019	BOD, carbonaceous [5 day,	80082-1-0	Effluent Gross		0.033	lb/d			lb/d								
KY0083755	Timberland Subdivision WWTP	McCracken	001-1	06/30/2019	BOD, carbonaceous [5 day,	80082-1-0	Effluent Gross				0.033	lb/d	lb/d								
KY0083755	Timberland Subdivision WWTP	McCracken	001-1	06/30/2019	BOD, carbonaceous [5 day,	80082-1-0	Effluent Gross										2	mg/L			mg/L
KY0083755	Timberland Subdivision WWTP	McCracken	001-1	06/30/2019	BOD, carbonaceous [5 day,	80082-1-0	Effluent Gross												2	mg/L	mg/L
KY0083755	Timberland Subdivision WWTP	McCracken	001-1	05/31/2019	BOD, carbonaceous [5 day,	80082-1-0	Effluent Gross		0.12	lb/d			lb/d								
KY0083755	Timberland Subdivision WWTP	McCracken	001-1	05/31/2019	BOD, carbonaceous [5 day,	80082-1-0	Effluent Gross				0.12	lb/d	lb/d								
KY0083755	Timberland Subdivision WWTP	McCracken	001-1	05/31/2019	BOD, carbonaceous [5 day,	80082-1-0	Effluent Gross										7	mg/L			mg/L
KY0083755	Timberland Subdivision WWTP	McCracken	001-1	05/31/2019	BOD, carbonaceous [5 day,	80082-1-0	Effluent Gross												7	mg/L	mg/L
KY0083755	Timberland Subdivision WWTP	McCracken	001-1	04/30/2019	BOD, carbonaceous [5 day,	80082-1-0	Effluent Gross		NODI B		NODI B		lb/d								
KY0083755	Timberland Subdivision WWTP	McCracken	001-1	04/30/2019	BOD, carbonaceous [5 day,	80082-1-0	Effluent Gross										NODI B		NODI B		mg/L
KY0083755	Timberland Subdivision WWTP	McCracken	001-1	03/31/2019	BOD, carbonaceous [5 day,	80082-1-0	Effluent Gross		0.05	lb/d			lb/d								
KY0083755	Timberland Subdivision WWTP	McCracken	001-1	03/31/2019	BOD, carbonaceous [5 day,	80082-1-0	Effluent Gross				0.05	lb/d	lb/d								
KY0083755	Timberland Subdivision WWTP	McCracken	001-1	03/31/2019	BOD, carbonaceous [5 day,	80082-1-0	Effluent Gross										3	mg/L			mg/L
KY0083755	Timberland Subdivision WWTP	McCracken	001-1	03/31/2019	BOD, carbonaceous [5 day,	80082-1-0	Effluent Gross												3	mg/L	mg/L
KY0083755	Timberland Subdivision WWTP	McCracken	001-1	02/28/2019	BOD, carbonaceous [5 day,	80082-1-0	Effluent Gross		NODI B		NODI B		lb/d								
KY0083755	Timberland Subdivision WWTP	McCracken	001-1	02/28/2019	BOD, carbonaceous [5 day,	80082-1-0	Effluent Gross										NODI B		NODI B		mg/L
KY0083755	Timberland Subdivision WWTP	McCracken	001-1	01/31/2019	BOD, carbonaceous [5 day,	80082-1-0	Effluent Gross		NODI B		NODI B		lb/d								
KY0083755	Timberland Subdivision WWTP	McCracken	001-1	01/31/2019	BOD, carbonaceous [5 day,	80082-1-0	Effluent Gross										NODI B		NODI B		mg/L
KY0083755	Timberland Subdivision WWTP	McCracken	001-1	12/31/2018	BOD, carbonaceous [5 day,	80082-1-0	Effluent Gross		NODI B		NODI B		lb/d								
KY0083755	Timberland Subdivision WWTP	McCracken	001-1	12/31/2018	BOD, carbonaceous [5 day,	80082-1-0	Effluent Gross										NODI B		NODI B		mg/L
KY0083755	Timberland Subdivision WWTP	McCracken	001-1	11/30/2018	BOD, carbonaceous [5 day,	80082-1-0	Effluent Gross		NODI B		NODI B		lb/d								
KY0083755	Timberland Subdivision WWTP	McCracken	001-1	11/30/2018	BOD, carbonaceous [5 day,	80082-1-0	Effluent Gross										NODI B		NODI B		mg/L
KY0083755	Timberland Subdivision WWTP	McCracken	001-1	10/31/2018	BOD, carbonaceous [5 day,	80082-1-0	Effluent Gross		NODI B		NODI B		lb/d								
KY0083755	Timberland Subdivision WWTP	McCracken	001-1	10/31/2018	BOD, carbonaceous [5 day,	80082-1-0	Effluent Gross										NODI B		NODI B		mg/L
KY0083755	Timberland Subdivision WWTP	McCracken	001-1	09/30/2018	BOD, carbonaceous [5 day,	80082-1-0	Effluent Gross		NODI B		NODI B		lb/d								
KY0083755	Timberland Subdivision WWTP	McCracken	001-1	09/30/2018	BOD, carbonaceous [5 day,	80082-1-0	Effluent Gross										NODI B		NODI B		mg/L
KY0083755	Timberland Subdivision WWTP	McCracken	001-1	08/31/2018	BOD, carbonaceous [5 day,	80082-1-0	Effluent Gross		0.05	lb/d			lb/d								
KY0083755	Timberland Subdivision WWTP	McCracken	001-1	08/31/2018	BOD, carbonaceous [5 day,	80082-1-0	Effluent Gross				0.05	lb/d	lb/d								
KY0083755	Timberland Subdivision WWTP	McCracken	001-1	08/31/2018	BOD, carbonaceous [5 day,	80082-1-0	Effluent Gross										3	mg/L			mg/L
KY0083755	Timberland Subdivision WWTP	McCracken	001-1	08/31/2018	BOD, carbonaceous [5 day,	80082-1-0	Effluent Gross												3	mg/L	mg/L
KY0083755	Timberland Subdivision WWTP	McCracken	001-1	07/31/2018	BOD, carbonaceous [5 day,	80082-1-0	Effluent Gross		0.033	lb/d			lb/d								
KY0083755	Timberland Subdivision WWTP	McCracken	001-1	07/31/2018	BOD, carbonaceous [5 day,	80082-1-0	Effluent Gross				0.033	lb/d	lb/d								
KY0083755	Timberland Subdivision WWTP	McCracken	001-1	07/31/2018	BOD, carbonaceous [5 day,	80082-1-0	Effluent Gross										2	mg/L			mg/L
KY0083755	Timberland Subdivision WWTP	McCracken	001-1	07/31/2018	BOD, carbonaceous [5 day,	80082-1-0	Effluent Gross												2	mg/L	mg/L
KY0083755	Timberland Subdivision WWTP	McCracken	001-1	06/30/2018	BOD, carbonaceous [5 day,	80082-1-0	Effluent Gross		0.066	lb/d			lb/d								
KY0083755	Timberland Subdivision WWTP	McCracken	001-1	06/30/2018	BOD, carbonaceous [5 day,	80082-1-0	Effluent Gross				0.066	lb/d	lb/d								
KY0083755	Timberland Subdivision WWTP	McCracken	001-1	06/30/2018	BOD, carbonaceous [5 day,	80082-1-0	Effluent Gross										4	mg/L			mg/L
KY0083755	Timberland Subdivision WWTP	McCracken	001-1	06/30/2018	BOD, carbonaceous [5 day,	80082-1-0	Effluent Gross												4	mg/L	mg/L
KY0083755	Timberland Subdivision WWTP	McCracken	001-1	05/31/2018	BOD, carbonaceous [5 day,	80082-1-0	Effluent Gross		NODI B		NODI B		lb/d								
KY0083755	Timberland Subdivision WWTP	McCracken	001-1	05/31/2018	BOD, carbonaceous [5 day,	80082-1-0	Effluent Gross										NODI B		NODI B		mg/L
KY0083755	Timberland Subdivision WWTP	McCracken	001-1	04/30/2018	BOD, carbonaceous [5 day,	80082-1-0	Effluent Gross		NODI B		NODI B		lb/d								
KY0083755	Timberland Subdivision WWTP	McCracken	001-1	04/30/2018	BOD, carbonaceous [5 day,	80082-1-0	Effluent Gross										NODI B		NODI B		mg/L
KY0083755	Timberland Subdivision WWTP	McCracken	001-1	03/31/2018	BOD, carbonaceous [5 day,	80082-1-0	Effluent Gross		NODI B		NODI B		lb/d								
KY0083755	Timberland Subdivision WWTP	McCracken	001-1	03/31/2018	BOD, carbonaceous [5 day,	80082-1-0	Effluent Gross										NODI B		NODI B		mg/L
KY0083755	Timberland Subdivision WWTP	McCracken	001-1	02/28/2018	BOD, carbonaceous [5 day,	80082-1-0	Effluent Gross		NODI B		NODI B		lb/d								
KY0083755	Timberland Subdivision WWTP	McCracken	001-1	02/28/2018	BOD, carbonaceous [5 day,	80082-1-0	Effluent Gross										NODI B		NODI B		mg/L
KY0083755	Timberland Subdivision WWTP	McCracken	001-1	01/31/2018	BOD, carbonaceous [5 day,	80082-1-0	Effluent Gross		NODI B		NODI B		lb/d								
KY0083755	Timberland Subdivision WWTP	McCracken	001-1	01/31/2018	BOD, carbonaceous [5 day,	80082-1-0	Effluent Gross										NODI B		NODI B		mg/L
KY0083755	Timberland Subdivision WWTP	McCracken	001-1	12/31/2017	BOD, carbonaceous [5 day,	80082-1-0	Effluent Gross		NODI B		NODI B		lb/d								
KY0083755	Timberland Subdivision WWTP	McCracken	001-1	12/31/2017	BOD, carbonaceous [5 day,	80082-1-0	Effluent Gross										NODI B		NODI B		mg/L
KY0083755	Timberland Subdivision WWTP	McCracken	001-1	11/30/2017	BOD, carbonaceous [5 day,	80082-1-0	Effluent Gross		NODI B		NODI B		lb/d								
KY0083755	Timberland Subdivision WWTP	McCracken	001-1	11/30/2017	BOD, carbonaceous [5 day,	80082-1-0	Effluent Gross										NODI B		NODI B		mg/L
KY0083755	Timberland Subdivision WWTP	McCracken	001-1	10/31/2017	BOD, carbonaceous [5 day,	80082-1-0	Effluent Gross		NODI B		NODI B		lb/d								
KY0083755	Timberland Subdivision WWTP	McCracken	001-1	10/31/2017	BOD, carbonaceous [5 day,	80082-1-0	Effluent Gross										NODI B		NODI B		mg/L
KY0083755	Timberland Subdivision WWTP	McCracken	001-1	09/30/2017	BOD, carbonaceous [5 day,	80082-1-0	Effluent Gross		NODI B		NODI B		lb/d								
KY0083755	Timberland Subdivision WWTP	McCracken	001-1	09/30/2017	BOD, carbonaceous [5 day,	80082-1-0	Effluent Gross										NODI B		NODI B		mg/L
KY0083755	Timberland Subdivision WWTP	McCracken	001-1	08/31/2017	BOD, carbonaceous [5 day,	80082-1-0	Effluent Gross		0.033	lb/d			lb/d								
KY0083755	Timberland Subdivision WWTP	McCracken	001-1	08/31/2017	BOD, carbonaceous [5 day,	80082-1-0	Effluent Gross				0.033	lb/d	lb/d								
KY0083755	Timberland Subdivision WWTP	McCracken	001-1	08/31/2017	BOD, carbonaceous [5 day,	80082-1-0	Effluent Gross										2	mg/L			mg/L

KY0083755	Timberland Subdivision WWTP	McCracken	001-1	08/31/2017	BOD, carbonaceous [5 day,	80082-1-0	Effluent Gross											2	mg/L	mg/L
KY0083755	Timberland Subdivision WWTP	McCracken	001-1	07/31/2017	BOD, carbonaceous [5 day,	80082-1-0	Effluent Gross		NODI B		NODI B		lb/d							
KY0083755	Timberland Subdivision WWTP	McCracken	001-1	07/31/2017	BOD, carbonaceous [5 day,	80082-1-0	Effluent Gross									NODI B		NODI B		mg/L
KY0083755	Timberland Subdivision WWTP	McCracken	001-1	06/30/2017	BOD, carbonaceous [5 day,	80082-1-0	Effluent Gross		0.033	lb/d			lb/d							
KY0083755	Timberland Subdivision WWTP	McCracken	001-1	06/30/2017	BOD, carbonaceous [5 day,	80082-1-0	Effluent Gross				0.033	lb/d	lb/d							
KY0083755	Timberland Subdivision WWTP	McCracken	001-1	06/30/2017	BOD, carbonaceous [5 day,	80082-1-0	Effluent Gross									2	mg/L			mg/L
KY0083755	Timberland Subdivision WWTP	McCracken	001-1	06/30/2017	BOD, carbonaceous [5 day,	80082-1-0	Effluent Gross											2	mg/L	mg/L
KY0083755	Timberland Subdivision WWTP	McCracken	001-1	05/31/2017	BOD, carbonaceous [5 day,	80082-1-0	Effluent Gross		NODI B		NODI B		lb/d							
KY0083755	Timberland Subdivision WWTP	McCracken	001-1	05/31/2017	BOD, carbonaceous [5 day,	80082-1-0	Effluent Gross									NODI B		NODI B		mg/L
KY0083755	Timberland Subdivision WWTP	McCracken	001-1	04/30/2017	BOD, carbonaceous [5 day,	80082-1-0	Effluent Gross		NODI B		NODI B		lb/d							
KY0083755	Timberland Subdivision WWTP	McCracken	001-1	04/30/2017	BOD, carbonaceous [5 day,	80082-1-0	Effluent Gross									NODI B		NODI B		mg/L
KY0083755	Timberland Subdivision WWTP	McCracken	001-1	03/31/2017	BOD, carbonaceous [5 day,	80082-1-0	Effluent Gross		NODI B		NODI B		lb/d							
KY0083755	Timberland Subdivision WWTP	McCracken	001-1	03/31/2017	BOD, carbonaceous [5 day,	80082-1-0	Effluent Gross									NODI B		NODI B		mg/L
KY0083755	Timberland Subdivision WWTP	McCracken	001-1	02/28/2017	BOD, carbonaceous [5 day,	80082-1-0	Effluent Gross		NODI B		NODI B		lb/d							
KY0083755	Timberland Subdivision WWTP	McCracken	001-1	02/28/2017	BOD, carbonaceous [5 day,	80082-1-0	Effluent Gross									NODI B		NODI B		mg/L
KY0083755	Timberland Subdivision WWTP	McCracken	001-1	01/31/2017	BOD, carbonaceous [5 day,	80082-1-0	Effluent Gross		NODI B		NODI B		lb/d							
KY0083755	Timberland Subdivision WWTP	McCracken	001-1	01/31/2017	BOD, carbonaceous [5 day,	80082-1-0	Effluent Gross									NODI B		NODI B		mg/L
KY0083755	Timberland Subdivision WWTP	McCracken	001-1	12/31/2016	BOD, carbonaceous [5 day,	80082-1-0	Effluent Gross		NODI B		NODI B		lb/d							
KY0083755	Timberland Subdivision WWTP	McCracken	001-1	12/31/2016	BOD, carbonaceous [5 day,	80082-1-0	Effluent Gross									NODI B		NODI B		mg/L
KY0083755	Timberland Subdivision WWTP	McCracken	001-1	11/30/2016	BOD, carbonaceous [5 day,	80082-1-0	Effluent Gross		NODI B		NODI B		lb/d							
KY0083755	Timberland Subdivision WWTP	McCracken	001-1	11/30/2016	BOD, carbonaceous [5 day,	80082-1-0	Effluent Gross									NODI B		NODI B		mg/L
KY0083755	Timberland Subdivision WWTP	McCracken	001-1	10/31/2016	BOD, carbonaceous [5 day,	80082-1-0	Effluent Gross		NODI B		NODI B		lb/d							
KY0083755	Timberland Subdivision WWTP	McCracken	001-1	10/31/2016	BOD, carbonaceous [5 day,	80082-1-0	Effluent Gross									NODI B		NODI B		mg/L
KY0083755	Timberland Subdivision WWTP	McCracken	001-1	09/30/2016	BOD, carbonaceous [5 day,	80082-1-0	Effluent Gross		NODI B		NODI B		lb/d							
KY0083755	Timberland Subdivision WWTP	McCracken	001-1	09/30/2016	BOD, carbonaceous [5 day,	80082-1-0	Effluent Gross									NODI B		NODI B		mg/L
KY0083755	Timberland Subdivision WWTP	McCracken	001-1	08/31/2016	BOD, carbonaceous [5 day,	80082-1-0	Effluent Gross		NODI B		NODI B		lb/d							
KY0083755	Timberland Subdivision WWTP	McCracken	001-1	08/31/2016	BOD, carbonaceous [5 day,	80082-1-0	Effluent Gross									NODI B		NODI B		mg/L
KY0083755	Timberland Subdivision WWTP	McCracken	001-1	07/31/2016	BOD, carbonaceous [5 day,	80082-1-0	Effluent Gross		NODI B		NODI B		lb/d							
KY0083755	Timberland Subdivision WWTP	McCracken	001-1	07/31/2016	BOD, carbonaceous [5 day,	80082-1-0	Effluent Gross									NODI B		NODI B		mg/L
KY0083755	Timberland Subdivision WWTP	McCracken	001-1	06/30/2016	BOD, carbonaceous [5 day,	80082-1-0	Effluent Gross		0.07	lb/d			lb/d							
KY0083755	Timberland Subdivision WWTP	McCracken	001-1	06/30/2016	BOD, carbonaceous [5 day,	80082-1-0	Effluent Gross				0.07	lb/d	lb/d							
KY0083755	Timberland Subdivision WWTP	McCracken	001-1	06/30/2016	BOD, carbonaceous [5 day,	80082-1-0	Effluent Gross									4	mg/L			mg/L
KY0083755	Timberland Subdivision WWTP	McCracken	001-1	06/30/2016	BOD, carbonaceous [5 day,	80082-1-0	Effluent Gross											4	mg/L	mg/L
KY0083755	Timberland Subdivision WWTP	McCracken	001-1	05/31/2016	BOD, carbonaceous [5 day,	80082-1-0	Effluent Gross		NODI B		NODI B		lb/d							
KY0083755	Timberland Subdivision WWTP	McCracken	001-1	05/31/2016	BOD, carbonaceous [5 day,	80082-1-0	Effluent Gross									NODI B		NODI B		mg/L
KY0083755	Timberland Subdivision WWTP	McCracken	001-1	04/30/2016	BOD, carbonaceous [5 day,	80082-1-0	Effluent Gross		NODI B		NODI B		lb/d							
KY0083755	Timberland Subdivision WWTP	McCracken	001-1	04/30/2016	BOD, carbonaceous [5 day,	80082-1-0	Effluent Gross									NODI B		NODI B		mg/L
KY0083755	Timberland Subdivision WWTP	McCracken	001-1	03/31/2016	BOD, carbonaceous [5 day,	80082-1-0	Effluent Gross		NODI B		NODI B		lb/d							
KY0083755	Timberland Subdivision WWTP	McCracken	001-1	03/31/2016	BOD, carbonaceous [5 day,	80082-1-0	Effluent Gross									NODI B		NODI B		mg/L
KY0083755	Timberland Subdivision WWTP	McCracken	001-1	02/29/2016	BOD, carbonaceous [5 day,	80082-1-0	Effluent Gross		NODI B		NODI B		lb/d							
KY0083755	Timberland Subdivision WWTP	McCracken	001-1	02/29/2016	BOD, carbonaceous [5 day,	80082-1-0	Effluent Gross									NODI B		NODI B		mg/L

Effluent Vio. Exists	Non-Receipt Vio. Exists	DMR Received Date
N	N	3/22/2021
N	N	2/20/2021
Y	N	1/24/2021
N	N	12/23/2020
N	N	11/25/2020
Y	N	10/24/2020
Y	N	9/25/2020
Y	N	8/24/2020
Y	N	7/21/2020
Y	N	6/26/2020
N	N	5/23/2020
N	N	4/19/2020
N	N	3/28/2020
N	N	2/16/2020
N	N	1/13/2020
N	N	12/25/2019
N	N	11/2/2019
N	N	10/19/2019
N	N	9/15/2019
N	N	8/25/2019
N	N	7/22/2019
N	N	6/15/2019
N	N	5/16/2019
N	N	4/25/2019
N	N	3/14/2019
N	N	2/13/2019
N	N	1/15/2019
N	N	12/16/2018
N	N	11/20/2018
N	N	10/5/2018
N	N	9/15/2018
N	N	8/11/2018
N	N	7/17/2018
N	N	6/14/2018
N	N	5/21/2018
N	N	4/20/2018
N	N	3/24/2018
N	N	2/17/2018
N	N	1/13/2018
N	N	12/20/2017
N	N	11/14/2017
N	N	10/8/2017
N	N	9/18/2017
N	N	8/12/2017
N	N	7/24/2017
N	N	6/26/2017
N	N	5/12/2017
N	N	4/23/2017
N	N	3/11/2017
N	N	2/18/2017
N	N	1/17/2017
N	N	12/25/2016
N	N	11/13/2016
N	N	10/23/2016
N	N	9/24/2016
N	N	8/20/2016
N	N	7/26/2016
N	N	6/25/2016
N	N	5/20/2016
N	N	5/20/2016
N	Y	5/20/2016
N	N	3/22/2021
N	N	3/22/2021
N	N	2/20/2021
N	N	2/20/2021
N	N	1/24/2021
N	N	1/24/2021
N	N	12/23/2020
N	N	12/23/2020
N	N	11/25/2020
N	N	11/25/2020
N	N	10/24/2020
N	N	10/24/2020
N	N	9/25/2020
N	N	9/25/2020
N	N	8/24/2020
N	N	8/24/2020
N	N	7/21/2020
N	N	7/21/2020
N	N	6/26/2020
N	N	6/26/2020
N	N	5/23/2020

N	N	5/23/2020
N	N	4/19/2020
N	N	4/19/2020
N	N	3/28/2020
N	N	3/28/2020
N	N	2/16/2020
N	N	2/16/2020
N	N	1/13/2020
N	N	1/13/2020
N	N	12/25/2019
N	N	12/25/2019
N	N	11/2/2019
N	N	11/2/2019
N	N	10/19/2019
N	N	10/19/2019
N	N	9/15/2019
N	N	9/15/2019
N	N	8/25/2019
N	N	8/25/2019
N	N	7/22/2019
N	N	7/22/2019
N	N	6/15/2019
N	N	6/15/2019
N	N	5/16/2019
N	N	5/16/2019
N	N	4/25/2019
N	N	4/25/2019
N	N	3/14/2019
N	N	3/14/2019
N	N	2/13/2019
N	N	2/13/2019
N	N	1/15/2019
N	N	1/15/2019
N	N	12/16/2018
N	N	12/16/2018
N	N	11/20/2018
N	N	11/20/2018
N	N	10/5/2018
N	N	10/5/2018
N	N	9/15/2018
N	N	9/15/2018
N	N	8/11/2018
N	N	8/11/2018
N	N	7/17/2018
N	N	7/17/2018
N	N	6/14/2018
N	N	6/14/2018
N	N	6/14/2018
N	N	5/21/2018
N	N	5/21/2018
N	N	4/20/2018
N	N	4/20/2018
N	N	3/24/2018
N	N	3/24/2018
N	N	2/17/2018
N	N	2/17/2018
N	N	1/13/2018
N	N	1/13/2018
N	N	12/20/2017
N	N	12/20/2017
N	N	11/14/2017
N	N	11/14/2017
N	N	10/8/2017
N	N	10/8/2017
N	N	9/18/2017
N	N	9/18/2017
N	N	8/12/2017
N	N	8/12/2017
N	N	7/24/2017
N	N	7/24/2017
N	N	6/26/2017
N	N	6/26/2017
N	N	5/12/2017
N	N	5/12/2017
N	N	4/23/2017
N	N	4/23/2017
N	N	3/11/2017
N	N	3/11/2017
N	N	2/18/2017
N	N	2/18/2017
N	N	1/17/2017
N	N	1/17/2017
N	N	12/25/2016
N	N	12/25/2016
N	N	11/13/2016
N	N	11/13/2016
N	N	10/23/2016
N	N	10/23/2016
N	N	9/24/2016
N	N	9/24/2016
N	N	8/20/2016

N	N	8/20/2016
N	N	7/26/2016
N	N	7/26/2016
N	N	6/25/2016
N	N	6/25/2016
N	N	5/20/2016
N	N	5/20/2016
N	N	5/20/2016
N	N	5/20/2016
N	Y	5/20/2016
N	Y	5/20/2016
Y	N	3/22/2021
N	N	3/22/2021
N	N	2/20/2021
N	N	2/20/2021
N	N	1/24/2021
N	N	1/24/2021
N	N	12/23/2020
N	N	12/23/2020
N	N	11/25/2020
N	N	11/25/2020
N	N	10/24/2020
N	N	10/24/2020
N	N	9/25/2020
N	N	9/25/2020
N	N	8/24/2020
N	N	8/24/2020
N	N	7/21/2020
N	N	7/21/2020
N	N	6/26/2020
N	N	6/26/2020
N	N	5/23/2020
N	N	5/23/2020
N	N	4/19/2020
N	N	4/19/2020
N	N	3/28/2020
N	N	3/28/2020
N	N	2/16/2020
N	N	2/16/2020
N	N	2/16/2020
N	N	2/16/2020
N	N	1/13/2020
N	N	1/13/2020
N	N	1/13/2020
N	N	1/13/2020
N	N	12/25/2019
N	N	12/25/2019
N	N	12/25/2019
N	N	12/25/2019
N	N	12/25/2019
N	N	11/2/2019
N	N	11/2/2019
N	N	11/2/2019
N	N	11/2/2019
N	N	10/19/2019
N	N	10/19/2019
N	N	10/19/2019
N	N	10/19/2019
N	N	9/15/2019
N	N	9/15/2019
N	N	9/15/2019
N	N	9/15/2019
N	N	8/25/2019
N	N	8/25/2019
N	N	8/25/2019
N	N	8/25/2019
N	N	7/22/2019
N	N	7/22/2019
Y	N	7/22/2019
N	N	7/22/2019
N	N	6/15/2019
N	N	6/15/2019
N	N	6/15/2019
N	N	6/15/2019
N	N	5/16/2019
N	N	5/16/2019
N	N	5/16/2019
N	N	5/16/2019
N	N	4/25/2019
N	N	4/25/2019
N	N	4/25/2019
N	N	4/25/2019
N	N	3/14/2019
N	N	3/14/2019
N	N	3/14/2019
N	N	3/14/2019
N	N	2/13/2019
N	N	2/13/2019
N	N	2/13/2019
N	N	2/13/2019
N	N	1/15/2019

N	N	1/15/2019
N	N	1/15/2019
N	N	1/15/2019
N	N	12/16/2018
N	N	12/16/2018
N	N	11/20/2018
N	N	11/20/2018
N	N	11/20/2018
N	N	11/20/2018
N	N	10/5/2018
N	N	10/5/2018
N	N	10/5/2018
N	N	10/5/2018
N	N	9/15/2018
N	N	9/15/2018
N	N	9/15/2018
N	N	9/15/2018
N	N	8/11/2018
N	N	8/11/2018
N	N	8/11/2018
N	N	8/11/2018
N	N	7/17/2018
N	N	7/17/2018
N	N	7/17/2018
N	N	7/17/2018
N	N	6/14/2018
N	N	6/14/2018
N	N	5/21/2018
N	N	5/21/2018
N	N	5/21/2018
N	N	5/21/2018
N	N	4/20/2018
N	N	4/20/2018
N	N	4/20/2018
N	N	4/20/2018
N	N	3/24/2018
N	N	3/24/2018
N	N	3/24/2018
N	N	3/24/2018
N	N	2/17/2018
N	N	2/17/2018
N	N	2/17/2018
N	N	2/17/2018
N	N	1/13/2018
N	N	1/13/2018
N	N	1/13/2018
N	N	1/13/2018
N	N	1/13/2018
N	N	1/13/2018
N	N	12/20/2017
N	N	12/20/2017
N	N	12/20/2017
N	N	12/20/2017
N	N	11/14/2017
N	N	11/14/2017
N	N	11/14/2017
N	N	11/14/2017
N	N	10/8/2017
N	N	10/8/2017
N	N	10/8/2017
N	N	10/8/2017
N	N	9/18/2017
N	N	9/18/2017
N	N	9/18/2017
N	N	9/18/2017
N	N	8/12/2017
N	N	8/12/2017
N	N	8/12/2017
N	N	8/12/2017
N	N	7/24/2017
N	N	7/24/2017
N	N	7/24/2017
N	N	7/24/2017
N	N	6/26/2017
N	N	6/26/2017
N	N	6/26/2017
N	N	6/26/2017
N	N	5/12/2017
N	N	5/12/2017
N	N	5/12/2017
N	N	5/12/2017
N	N	4/23/2017
N	N	4/23/2017
N	N	4/23/2017
N	N	4/23/2017
N	N	3/11/2017
N	N	3/11/2017
N	N	3/11/2017
N	N	3/11/2017
N	N	2/18/2017
N	N	2/18/2017
N	N	2/18/2017

N	N	2/18/2017
N	N	1/17/2017
N	N	1/17/2017
N	N	1/17/2017
N	N	1/17/2017
N	N	12/25/2016
N	N	12/25/2016
N	N	12/25/2016
N	N	12/25/2016
N	N	11/13/2016
N	N	11/13/2016
N	N	11/13/2016
N	N	11/13/2016
N	N	10/23/2016
N	N	10/23/2016
N	N	10/23/2016
N	N	10/23/2016
N	N	9/24/2016
N	N	9/24/2016
N	N	8/20/2016
N	N	8/20/2016
N	N	8/20/2016
N	N	8/20/2016
N	N	7/26/2016
N	N	7/26/2016
N	N	7/26/2016
N	N	7/26/2016
N	N	6/25/2016
N	N	6/25/2016
N	N	6/25/2016
N	N	6/25/2016
N	N	5/20/2016
N	N	5/20/2016
N	N	5/20/2016
N	N	5/20/2016
N	N	5/20/2016
N	N	5/20/2016
N	N	5/20/2016
N	N	5/20/2016
N	Y	5/20/2016
N	Y	5/20/2016
N	Y	5/20/2016
N	Y	5/20/2016
Y	N	11/25/2020
Y	N	11/25/2020
Y	N	10/24/2020
Y	N	10/24/2020
Y	N	10/24/2020
Y	N	9/25/2020
Y	N	9/25/2020
Y	N	8/24/2020
Y	N	8/24/2020
Y	N	7/21/2020
Y	N	7/21/2020
Y	N	6/26/2020
Y	N	6/26/2020
N	N	11/2/2019
N	N	11/2/2019
N	N	11/2/2019
N	N	11/2/2019
Y	N	10/19/2019
Y	N	10/19/2019
Y	N	10/19/2019
Y	N	10/19/2019
N	N	9/15/2019
N	N	9/15/2019
N	N	8/25/2019
N	N	8/25/2019
N	N	8/25/2019
N	N	8/25/2019
N	N	7/22/2019
N	N	7/22/2019
N	N	6/15/2019
N	N	6/15/2019
Y	N	6/15/2019
Y	N	6/15/2019
N	N	11/20/2018
N	N	11/20/2018
Y	N	11/20/2018
Y	N	11/20/2018
N	N	10/5/2018
N	N	10/5/2018
Y	N	10/5/2018
Y	N	10/5/2018
N	N	9/15/2018
N	N	9/15/2018
Y	N	9/15/2018
Y	N	9/15/2018
N	N	8/11/2018
N	N	8/11/2018
Y	N	8/11/2018

N	N	8/11/2018
N	N	7/17/2018
N	N	7/17/2018
Y	N	7/17/2018
N	N	7/17/2018
N	N	6/14/2018
N	N	6/14/2018
N	N	6/14/2018
N	N	6/14/2018
N	N	11/14/2017
N	N	11/14/2017
N	N	11/14/2017
N	N	11/14/2017
N	N	10/8/2017
N	N	10/8/2017
N	N	10/8/2017
N	N	10/8/2017
N	N	9/18/2017
N	N	9/18/2017
N	N	9/18/2017
N	N	9/18/2017
N	N	8/12/2017
N	N	8/12/2017
N	N	8/12/2017
N	N	8/12/2017
N	N	7/24/2017
N	N	7/24/2017
Y	N	7/24/2017
Y	N	7/24/2017
N	N	6/26/2017
N	N	6/26/2017
N	N	6/26/2017
N	N	6/26/2017
N	N	11/13/2016
N	N	11/13/2016
Y	N	11/13/2016
N	N	11/13/2016
N	N	10/23/2016
N	N	10/23/2016
Y	N	10/23/2016
Y	N	10/23/2016
N	N	9/24/2016
N	N	9/24/2016
N	N	9/24/2016
N	N	9/24/2016
N	N	8/20/2016
N	N	8/20/2016
N	N	8/20/2016
N	N	8/20/2016
N	N	8/20/2016
N	N	7/26/2016
N	N	7/26/2016
N	N	7/26/2016
N	N	7/26/2016
N	N	6/25/2016
N	N	6/25/2016
N	N	6/25/2016
N	N	6/25/2016
N	N	3/22/2021
N	N	3/22/2021
N	N	2/20/2021
N	N	2/20/2021
N	N	1/24/2021
N	N	1/24/2021
N	N	12/23/2020
N	N	12/23/2020
N	N	5/23/2020
N	N	4/19/2020
N	N	3/28/2020
N	N	2/16/2020
N	N	2/16/2020
N	N	1/13/2020
N	N	1/13/2020
N	N	12/25/2019
N	N	12/25/2019
N	N	12/25/2019
N	N	12/25/2019
N	N	5/16/2019
N	N	5/16/2019
N	N	5/16/2019
N	N	5/16/2019
N	N	4/25/2019
N	N	4/25/2019
N	N	4/25/2019
N	N	4/25/2019
N	N	3/14/2019
N	N	3/14/2019
N	N	3/14/2019
N	N	3/14/2019
N	N	2/13/2019
N	N	2/13/2019

N	N	2/13/2019
N	N	2/13/2019
N	N	1/15/2019
N	N	1/15/2019
N	N	1/15/2019
N	N	1/15/2019
N	N	12/16/2018
N	N	12/16/2018
N	N	12/16/2018
N	N	12/16/2018
N	N	5/21/2018
N	N	5/21/2018
N	N	5/21/2018
N	N	5/21/2018
N	N	4/20/2018
N	N	4/20/2018
N	N	4/20/2018
N	N	4/20/2018
N	N	3/24/2018
N	N	3/24/2018
N	N	3/24/2018
N	N	3/24/2018
N	N	2/17/2018
N	N	2/17/2018
N	N	2/17/2018
N	N	2/17/2018
N	N	1/13/2018
N	N	1/13/2018
N	N	1/13/2018
N	N	1/13/2018
N	N	12/20/2017
N	N	12/20/2017
N	N	12/20/2017
N	N	12/20/2017
N	N	5/12/2017
N	N	5/12/2017
N	N	5/12/2017
N	N	5/12/2017
N	N	4/23/2017
N	N	4/23/2017
N	N	4/23/2017
N	N	4/23/2017
N	N	3/11/2017
N	N	3/11/2017
N	N	3/11/2017
N	N	3/11/2017
N	N	3/11/2017
N	N	3/11/2017
N	N	2/18/2017
N	N	2/18/2017
N	N	2/18/2017
N	N	2/18/2017
N	N	1/17/2017
N	N	1/17/2017
N	N	1/17/2017
N	N	1/17/2017
N	N	12/25/2016
N	N	12/25/2016
N	N	12/25/2016
N	N	12/25/2016
N	N	5/20/2016
N	N	5/20/2016
N	N	5/20/2016
N	N	5/20/2016
N	N	5/20/2016
N	N	5/20/2016
N	N	5/20/2016
N	N	5/20/2016
N	Y	5/20/2016
N	Y	5/20/2016
N	Y	5/20/2016
N	Y	5/20/2016
N	N	3/22/2021
N	N	3/22/2021
N	N	2/20/2021
N	N	2/20/2021
N	N	1/24/2021
N	N	1/24/2021
N	N	12/23/2020
N	N	12/23/2020
N	N	11/25/2020
N	N	11/25/2020
N	N	10/24/2020
N	N	10/24/2020
N	N	9/25/2020
N	N	9/25/2020
N	N	8/24/2020
N	N	8/24/2020
N	N	7/21/2020
N	N	7/21/2020
N	N	6/26/2020
N	N	6/26/2020

N	N	5/23/2020
N	N	5/23/2020
N	N	4/19/2020
N	N	4/19/2020
N	N	3/28/2020
N	N	3/28/2020
N	N	2/16/2020
N	N	2/16/2020
N	N	1/13/2020
N	N	12/25/2019
N	N	12/25/2019
N	N	11/2/2019
N	N	11/2/2019
N	N	10/19/2019
N	N	10/19/2019
N	N	9/15/2019
N	N	9/15/2019
N	N	8/25/2019
N	N	8/25/2019
N	N	7/22/2019
N	N	7/22/2019
N	N	6/15/2019
N	N	6/15/2019
N	N	5/16/2019
N	N	5/16/2019
N	N	4/25/2019
N	N	4/25/2019
N	N	3/14/2019
N	N	3/14/2019
N	N	2/13/2019
N	N	2/13/2019
N	N	1/15/2019
N	N	1/15/2019
N	N	12/16/2018
N	N	12/16/2018
N	N	11/20/2018
N	N	11/20/2018
N	N	10/5/2018
N	N	10/5/2018
N	N	9/15/2018
N	N	9/15/2018
N	N	8/11/2018
N	N	8/11/2018
N	N	7/17/2018
N	N	7/17/2018
N	N	6/14/2018
N	N	6/14/2018
N	N	6/14/2018
N	N	5/21/2018
N	N	5/21/2018
N	N	4/20/2018
N	N	4/20/2018
N	N	3/24/2018
N	N	3/24/2018
N	N	2/17/2018
N	N	2/17/2018
N	N	1/13/2018
N	N	1/13/2018
N	N	12/20/2017
N	N	12/20/2017
N	N	11/14/2017
N	N	11/14/2017
N	N	10/8/2017
N	N	10/8/2017
N	N	9/18/2017
N	N	9/18/2017
N	N	8/12/2017
N	N	8/12/2017
N	N	7/24/2017
N	N	7/24/2017
N	N	6/26/2017
N	N	6/26/2017
N	N	5/12/2017
N	N	5/12/2017
N	N	4/23/2017
N	N	4/23/2017
N	N	3/11/2017
N	N	3/11/2017
N	N	2/18/2017
N	N	2/18/2017
N	N	1/17/2017
N	N	1/17/2017
N	N	12/25/2016
N	N	12/25/2016
N	N	11/13/2016
N	N	11/13/2016
N	N	10/23/2016
N	N	10/23/2016
N	N	9/24/2016
N	N	9/24/2016
N	N	8/20/2016

N	N	8/20/2016
N	N	7/26/2016
N	N	7/26/2016
N	N	6/25/2016
N	N	6/25/2016
N	N	5/20/2016
N	N	5/20/2016
N	N	5/20/2016
N	N	5/20/2016
N	Y	5/20/2016
N	Y	5/20/2016
Y	N	3/22/2021
Y	N	3/22/2021
Y	N	2/20/2021
Y	N	2/20/2021
Y	N	1/24/2021
Y	N	1/24/2021
Y	N	12/23/2020
Y	N	12/23/2020
Y	N	11/25/2020
Y	N	11/25/2020
N	N	10/24/2020
Y	N	9/25/2020
Y	N	9/25/2020
Y	N	8/24/2020
Y	N	8/24/2020
Y	N	7/21/2020
Y	N	7/21/2020
Y	N	6/26/2020
Y	N	6/26/2020
N	N	5/23/2020
N	N	4/19/2020
N	N	3/28/2020
N	N	2/16/2020
N	N	1/13/2020
N	N	12/25/2019
N	N	11/2/2019
N	N	10/19/2019
N	N	9/15/2019
N	N	8/25/2019
N	N	7/22/2019
N	N	6/15/2019
N	N	5/16/2019
N	N	4/25/2019
N	N	3/14/2019
N	N	2/13/2019
N	N	1/15/2019
N	N	12/16/2018
N	N	11/20/2018
N	N	10/5/2018
N	N	9/15/2018
N	N	8/11/2018
N	N	7/17/2018
N	N	6/14/2018
N	N	5/21/2018
N	N	4/20/2018
N	N	3/24/2018
N	N	2/17/2018
N	N	1/13/2018
N	N	12/20/2017
N	N	11/14/2017
N	N	10/8/2017
N	N	9/18/2017
N	N	8/12/2017
N	N	7/24/2017
N	N	6/26/2017
N	N	5/12/2017
N	N	4/23/2017
N	N	3/11/2017
N	N	2/18/2017
N	N	1/17/2017
N	N	12/25/2016
N	N	11/13/2016
N	N	10/23/2016
N	N	9/24/2016
N	N	8/20/2016
N	N	7/26/2016
N	N	6/25/2016
N	N	5/20/2016
N	N	5/20/2016
N	Y	5/20/2016
N	N	3/22/2021
N	N	3/22/2021
N	N	2/20/2021
N	N	2/20/2021
N	N	1/24/2021
N	N	1/24/2021
N	N	12/23/2020
N	N	12/23/2020
Y	N	11/25/2020

Y	N	11/25/2020
Y	N	10/24/2020
Y	N	10/24/2020
N	N	9/25/2020
N	N	9/25/2020
N	N	8/24/2020
N	N	8/24/2020
Y	N	7/21/2020
Y	N	7/21/2020
Y	N	6/26/2020
Y	N	6/26/2020
N	N	5/23/2020
N	N	4/19/2020
N	N	3/28/2020
N	N	2/16/2020
N	N	1/13/2020
N	N	12/25/2019
N	N	11/2/2019
N	N	10/19/2019
N	N	9/15/2019
N	N	8/25/2019
N	N	8/25/2019
N	N	7/22/2019
N	N	7/22/2019
N	N	6/15/2019
N	N	5/16/2019
N	N	4/25/2019
N	N	3/14/2019
N	N	3/14/2019
N	N	2/13/2019
N	N	1/15/2019
N	N	12/16/2018
N	N	11/20/2018
N	N	10/5/2018
N	N	9/15/2018
N	N	9/15/2018
N	N	8/11/2018
N	N	7/17/2018
N	N	6/14/2018
N	N	6/14/2018
N	N	5/21/2018
N	N	5/21/2018
N	N	4/20/2018
N	N	3/24/2018
N	N	2/17/2018
N	N	1/13/2018
N	N	1/13/2018
N	N	12/20/2017
N	N	11/14/2017
N	N	10/8/2017
N	N	9/18/2017
N	N	9/18/2017
N	N	8/12/2017
N	N	7/24/2017
N	N	6/26/2017
N	N	5/12/2017
N	N	4/23/2017
N	N	3/11/2017
N	N	2/18/2017
N	N	1/17/2017
N	N	1/17/2017
N	N	12/25/2016
N	N	11/13/2016
N	N	10/23/2016
N	N	9/24/2016
N	N	8/20/2016
N	N	7/26/2016
N	N	7/26/2016
N	N	6/25/2016
N	N	5/20/2016
N	N	5/20/2016
N	Y	5/20/2016
N	Y	5/20/2016
Y	N	3/22/2021
Y	N	3/22/2021
N	N	2/20/2021
N	N	2/20/2021
N	N	1/24/2021
N	N	1/24/2021
N	N	12/23/2020
N	N	12/23/2020
N	N	11/25/2020
N	N	11/25/2020
N	N	10/24/2020
N	N	10/24/2020
N	N	9/25/2020
N	N	9/25/2020
N	N	8/24/2020
N	N	8/24/2020
N	N	7/21/2020

N	N	7/21/2020
Y	N	6/26/2020
N	N	6/26/2020
N	N	5/23/2020
N	N	5/23/2020
Y	N	4/19/2020
Y	N	4/19/2020
Y	N	3/28/2020
Y	N	3/28/2020
N	N	2/16/2020
N	N	2/16/2020
N	N	2/16/2020
N	N	2/16/2020
N	N	1/13/2020
N	N	1/13/2020
N	N	12/25/2019
N	N	12/25/2019
N	N	11/2/2019
N	N	11/2/2019
N	N	10/19/2019
N	N	10/19/2019
N	N	10/19/2019
N	N	10/19/2019
N	N	9/15/2019
N	N	9/15/2019
N	N	9/15/2019
N	N	9/15/2019
N	N	8/25/2019
N	N	8/25/2019
N	N	8/25/2019
N	N	8/25/2019
N	N	7/22/2019
N	N	7/22/2019
N	N	7/22/2019
N	N	7/22/2019
N	N	6/15/2019
N	N	6/15/2019
N	N	6/15/2019
N	N	6/15/2019
N	N	5/16/2019
N	N	5/16/2019
N	N	4/25/2019
N	N	4/25/2019
N	N	4/25/2019
N	N	4/25/2019
N	N	3/14/2019
N	N	3/14/2019
N	N	3/14/2019
N	N	2/13/2019
N	N	2/13/2019
N	N	1/15/2019
N	N	1/15/2019
N	N	12/16/2018
N	N	12/16/2018
N	N	11/20/2018
N	N	11/20/2018
N	N	10/5/2018
N	N	10/5/2018
N	N	9/15/2018
N	N	9/15/2018
N	N	9/15/2018
N	N	9/15/2018
N	N	8/11/2018
N	N	8/11/2018
N	N	8/11/2018
N	N	8/11/2018
N	N	7/17/2018
N	N	7/17/2018
N	N	7/17/2018
N	N	7/17/2018
N	N	6/14/2018
N	N	6/14/2018
N	N	5/21/2018
N	N	5/21/2018
N	N	4/20/2018
N	N	4/20/2018
N	N	3/24/2018
N	N	3/24/2018
N	N	2/17/2018
N	N	2/17/2018
N	N	1/13/2018
N	N	1/13/2018
N	N	12/20/2017
N	N	12/20/2017
N	N	11/14/2017
N	N	11/14/2017
N	N	10/8/2017
N	N	10/8/2017
N	N	9/18/2017
N	N	9/18/2017
N	N	9/18/2017

N	N	9/18/2017
N	N	8/12/2017
N	N	8/12/2017
N	N	7/24/2017
N	N	7/24/2017
N	N	7/24/2017
N	N	7/24/2017
N	N	6/26/2017
N	N	6/26/2017
N	N	5/12/2017
N	N	5/12/2017
N	N	4/23/2017
N	N	4/23/2017
N	N	3/11/2017
N	N	3/11/2017
N	N	2/18/2017
N	N	2/18/2017
N	N	1/17/2017
N	N	1/17/2017
N	N	12/25/2016
N	N	12/25/2016
N	N	11/13/2016
N	N	11/13/2016
N	N	10/23/2016
N	N	10/23/2016
N	N	9/24/2016
N	N	9/24/2016
N	N	8/20/2016
N	N	8/20/2016
N	N	7/26/2016
N	N	7/26/2016
N	N	7/26/2016
N	N	7/26/2016
N	N	6/25/2016
N	N	6/25/2016
N	N	5/20/2016
N	N	5/20/2016
N	N	5/20/2016
N	N	5/20/2016
N	Y	5/20/2016
N	Y	5/20/2016

NPDES ID	Permit Name	Latitude in DMS	Longitude in DMS	Latitude in Decima	ongitude in Decim
KY0083755	Timberland Subdivis	+ 37 4' 44" 9	- 88 46' 31" 2	37.07915	-88.77534
KY0083755	Timberland Subdivis	+ 37 4' 44" 9	- 88 46' 31" 2	37.07915	-88.77534
KY0083755	Timberland Subdivis	+ 37 4' 44" 9	- 88 46' 31" 2	37.07915	-88.77534
KY0083755	Timberland Subdivis	+ 37 4' 44" 9	- 88 46' 31" 2	37.07915	-88.77534
KY0083755	Timberland Subdivis	+ 37 4' 44" 9	- 88 46' 31" 2	37.07915	-88.77534
KY0083755	Timberland Subdivis	+ 37 4' 44" 9	- 88 46' 31" 2	37.07915	-88.77534
KY0083755	Timberland Subdivis	+ 37 4' 44" 9	- 88 46' 31" 2	37.07915	-88.77534
KY0083755	Timberland Subdivis	+ 37 4' 44" 9	- 88 46' 31" 2	37.07915	-88.77534
KY0083755	Timberland Subdivis	+ 37 4' 44" 9	- 88 46' 31" 2	37.07915	-88.77534
KY0083755	Timberland Subdivis	+ 37 4' 44" 9	- 88 46' 31" 2	37.07915	-88.77534
KY0083755	Timberland Subdivis	+ 37 4' 44" 9	- 88 46' 31" 2	37.07915	-88.77534
KY0083755	Timberland Subdivis	+ 37 4' 44" 9	- 88 46' 31" 2	37.07915	-88.77534
KY0083755	Timberland Subdivis	+ 37 4' 44" 9	- 88 46' 31" 2	37.07915	-88.77534
KY0083755	Timberland Subdivis	+ 37 4' 44" 9	- 88 46' 31" 2	37.07915	-88.77534
KY0083755	Timberland Subdivis	+ 37 4' 44" 9	- 88 46' 31" 2	37.07915	-88.77534
KY0083755	Timberland Subdivis	+ 37 4' 44" 9	- 88 46' 31" 2	37.07915	-88.77534
KY0083755	Timberland Subdivis	+ 37 4' 44" 9	- 88 46' 31" 2	37.07915	-88.77534
KY0083755	Timberland Subdivis	+ 37 4' 44" 9	- 88 46' 31" 2	37.07915	-88.77534
KY0083755	Timberland Subdivis	+ 37 4' 44" 9	- 88 46' 31" 2	37.07915	-88.77534
KY0083755	Timberland Subdivis	+ 37 4' 44" 9	- 88 46' 31" 2	37.07915	-88.77534
KY0083755	Timberland Subdivis	+ 37 4' 44" 9	- 88 46' 31" 2	37.07915	-88.77534
KY0083755	Timberland Subdivis	+ 37 4' 44" 9	- 88 46' 31" 2	37.07915	-88.77534
KY0083755	Timberland Subdivis	+ 37 4' 44" 9	- 88 46' 31" 2	37.07915	-88.77534
KY0083755	Timberland Subdivis	+ 37 4' 44" 9	- 88 46' 31" 2	37.07915	-88.77534
KY0083755	Timberland Subdivis	+ 37 4' 44" 9	- 88 46' 31" 2	37.07915	-88.77534
KY0083755	Timberland Subdivis	+ 37 4' 44" 9	- 88 46' 31" 2	37.07915	-88.77534
KY0083755	Timberland Subdivis	+ 37 4' 44" 9	- 88 46' 31" 2	37.07915	-88.77534
KY0083755	Timberland Subdivis	+ 37 4' 44" 9	- 88 46' 31" 2	37.07915	-88.77534
KY0083755	Timberland Subdivis	+ 37 4' 44" 9	- 88 46' 31" 2	37.07915	-88.77534
KY0083755	Timberland Subdivis	+ 37 4' 44" 9	- 88 46' 31" 2	37.07915	-88.77534
KY0083755	Timberland Subdivis	+ 37 4' 44" 9	- 88 46' 31" 2	37.07915	-88.77534
KY0083755	Timberland Subdivis	+ 37 4' 44" 9	- 88 46' 31" 2	37.07915	-88.77534
KY0083755	Timberland Subdivis	+ 37 4' 44" 9	- 88 46' 31" 2	37.07915	-88.77534
KY0083755	Timberland Subdivis	+ 37 4' 44" 9	- 88 46' 31" 2	37.07915	-88.77534
KY0083755	Timberland Subdivis	+ 37 4' 44" 9	- 88 46' 31" 2	37.07915	-88.77534
KY0083755	Timberland Subdivis	+ 37 4' 44" 9	- 88 46' 31" 2	37.07915	-88.77534
KY0083755	Timberland Subdivis	+ 37 4' 44" 9	- 88 46' 31" 2	37.07915	-88.77534
KY0083755	Timberland Subdivis	+ 37 4' 44" 9	- 88 46' 31" 2	37.07915	-88.77534
KY0083755	Timberland Subdivis	+ 37 4' 44" 9	- 88 46' 31" 2	37.07915	-88.77534
KY0083755	Timberland Subdivis	+ 37 4' 44" 9	- 88 46' 31" 2	37.07915	-88.77534
KY0083755	Timberland Subdivis	+ 37 4' 44" 9	- 88 46' 31" 2	37.07915	-88.77534
KY0083755	Timberland Subdivis	+ 37 4' 44" 9	- 88 46' 31" 2	37.07915	-88.77534
KY0083755	Timberland Subdivis	+ 37 4' 44" 9	- 88 46' 31" 2	37.07915	-88.77534
KY0083755	Timberland Subdivis	+ 37 4' 44" 9	- 88 46' 31" 2	37.07915	-88.77534
KY0083755	Timberland Subdivis	+ 37 4' 44" 9	- 88 46' 31" 2	37.07915	-88.77534
KY0083755	Timberland Subdivis	+ 37 4' 44" 9	- 88 46' 31" 2	37.07915	-88.77534
KY0083755	Timberland Subdivis	+ 37 4' 44" 9	- 88 46' 31" 2	37.07915	-88.77534
KY0083755	Timberland Subdivis	+ 37 4' 44" 9	- 88 46' 31" 2	37.07915	-88.77534
KY0083755	Timberland Subdivis	+ 37 4' 44" 9	- 88 46' 31" 2	37.07915	-88.77534
KY0083755	Timberland Subdivis	+ 37 4' 44" 9	- 88 46' 31" 2	37.07915	-88.77534

KY0083755	Timberland Subdivis	+ 37 4' 44" 9	- 88 46' 31" 2	37.07915	-88.77534
KY0083755	Timberland Subdivis	+ 37 4' 44" 9	- 88 46' 31" 2	37.07915	-88.77534

County Name	Facility UDF3	App. Design Flow (	mary Permit SIC Co	rr. Major Minor Sta	Limit Set Name
McCracken		0.025	6552	Minor	Domestic Wastewat
McCracken		0.025	6552	Minor	Domestic Wastewat
McCracken		0.025	6552	Minor	Domestic Wastewat
McCracken		0.025	6552	Minor	Domestic Wastewat
McCracken		0.025	6552	Minor	Domestic Wastewat
McCracken		0.025	6552	Minor	Domestic Wastewat
McCracken		0.025	6552	Minor	Domestic Wastewat
McCracken		0.025	6552	Minor	Domestic Wastewat
McCracken		0.025	6552	Minor	Domestic Wastewat
McCracken		0.025	6552	Minor	Domestic Wastewat
McCracken		0.025	6552	Minor	Domestic Wastewat
McCracken		0.025	6552	Minor	Domestic Wastewat
McCracken		0.025	6552	Minor	Domestic Wastewat
McCracken		0.025	6552	Minor	Domestic Wastewat
McCracken		0.025	6552	Minor	Domestic Wastewat
McCracken		0.025	6552	Minor	Domestic Wastewat
McCracken		0.025	6552	Minor	SANITARY WASTE
McCracken		0.025	6552	Minor	SANITARY WASTE
McCracken		0.025	6552	Minor	SANITARY WASTE
McCracken		0.025	6552	Minor	SANITARY WASTE
McCracken		0.025	6552	Minor	SANITARY WASTE
McCracken		0.025	6552	Minor	SANITARY WASTE
McCracken		0.025	6552	Minor	SANITARY WASTE
McCracken		0.025	6552	Minor	SANITARY WASTE
McCracken		0.025	6552	Minor	SANITARY WASTE
McCracken		0.025	6552	Minor	SANITARY WASTE
McCracken		0.025	6552	Minor	SANITARY WASTE
McCracken		0.025	6552	Minor	SANITARY WASTE
McCracken		0.025	6552	Minor	SANITARY WASTE
McCracken		0.025	6552	Minor	SANITARY WASTE
McCracken		0.025	6552	Minor	SANITARY WASTE
McCracken		0.025	6552	Minor	SANITARY WASTE
McCracken		0.025	6552	Minor	SANITARY WASTE
McCracken		0.025	6552	Minor	SANITARY WASTE
McCracken		0.025	6552	Minor	SANITARY WASTE
McCracken		0.025	6552	Minor	SANITARY WASTE
McCracken		0.025	6552	Minor	SANITARY WASTE
McCracken		0.025	6552	Minor	SANITARY WASTE
McCracken		0.025	6552	Minor	SANITARY WASTE
McCracken		0.025	6552	Minor	SANITARY WASTE
McCracken		0.025	6552	Minor	SANITARY WASTE
McCracken		0.025	6552	Minor	SANITARY WASTE

McCracken		0.025	6552	Minor	SANITARY WASTE
McCracken		0.025	6552	Minor	SANITARY WASTE

Number of Report	umber of Submissio	Initial Monitoring	R Initial DMR Due D	Perm Feature ID	Limit Set Designato
1	1	2/1/2020	3/28/2020	001	1
1	1	2/1/2020	3/28/2020	001	1
1	1	2/1/2020	3/28/2020	001	1
1	1	2/1/2020	3/28/2020	001	1
1	1	2/1/2020	3/28/2020	001	1
1	1	2/1/2020	3/28/2020	001	1
1	1	2/1/2020	3/28/2020	001	1
1	1	2/1/2020	3/28/2020	001	1
1	1	2/1/2020	3/28/2020	001	1
1	1	2/1/2020	3/28/2020	001	1
1	1	2/1/2020	3/28/2020	001	1
1	1	2/1/2020	3/28/2020	001	1
1	1	2/1/2020	3/28/2020	001	1
1	1	2/1/2020	3/28/2020	001	1
1	1	2/1/2020	3/28/2020	001	1
1	1	2/1/2020	3/28/2020	001	1
1	1	2/1/2020	3/28/2020	001	1
1	1	2/1/2020	3/28/2020	001	1
1	1	2/1/2020	3/28/2020	001	1
1	1	11/1/2014	12/28/2014	001	1
1	1	11/1/2014	12/28/2014	001	1
1	1	11/1/2014	12/28/2014	001	1
1	1	11/1/2014	12/28/2014	001	1
1	1	11/1/2014	12/28/2014	001	1
1	1	11/1/2014	12/28/2014	001	1
1	1	11/1/2014	12/28/2014	001	1
1	1	11/1/2014	12/28/2014	001	1
1	1	11/1/2014	12/28/2014	001	1
1	1	11/1/2014	12/28/2014	001	1
1	1	11/1/2014	12/28/2014	001	1
1	1	11/1/2014	12/28/2014	001	1
1	1	11/1/2014	12/28/2014	001	1
1	1	11/1/2014	12/28/2014	001	1
1	1	11/1/2014	12/28/2014	001	1
1	1	11/1/2014	12/28/2014	001	1
1	1	11/1/2014	12/28/2014	001	1
1	1	11/1/2014	12/28/2014	001	1
1	1	11/1/2014	12/28/2014	001	1
1	1	11/1/2014	12/28/2014	001	1
1	1	11/1/2014	12/28/2014	001	1
1	1	11/1/2014	12/28/2014	001	1
1	1	11/1/2014	12/28/2014	001	1
1	1	11/1/2014	12/28/2014	001	1
1	1	11/1/2014	12/28/2014	001	1

1	1	11/1/2014	12/28/2014	001	1
1	1	11/1/2014	12/28/2014	001	1

nitoring Location De/Longitude.Latitud	titude in Deg/Min/S/Longitude.Longitu	gitude in Deg/Min/	Limit Start Date
Effluent Gross	+37.079167	+ 37 4' 45" 0	-88.781111	- 88 46' 52" 0	2/1/2020
Effluent Gross	+37.079167	+ 37 4' 45" 0	-88.781111	- 88 46' 52" 0	2/1/2020
Effluent Gross	+37.079167	+ 37 4' 45" 0	-88.781111	- 88 46' 52" 0	2/1/2020
Effluent Gross	+37.079167	+ 37 4' 45" 0	-88.781111	- 88 46' 52" 0	2/1/2020
Effluent Gross	+37.079167	+ 37 4' 45" 0	-88.781111	- 88 46' 52" 0	2/1/2020
Effluent Gross	+37.079167	+ 37 4' 45" 0	-88.781111	- 88 46' 52" 0	2/1/2020
Effluent Gross	+37.079167	+ 37 4' 45" 0	-88.781111	- 88 46' 52" 0	2/1/2020
Effluent Gross	+37.079167	+ 37 4' 45" 0	-88.781111	- 88 46' 52" 0	2/1/2020
Effluent Gross	+37.079167	+ 37 4' 45" 0	-88.781111	- 88 46' 52" 0	2/1/2020
Effluent Gross	+37.079167	+ 37 4' 45" 0	-88.781111	- 88 46' 52" 0	2/1/2020
Effluent Gross	+37.079167	+ 37 4' 45" 0	-88.781111	- 88 46' 52" 0	2/1/2020
Effluent Gross	+37.079167	+ 37 4' 45" 0	-88.781111	- 88 46' 52" 0	2/1/2020
Effluent Gross	+37.079167	+ 37 4' 45" 0	-88.781111	- 88 46' 52" 0	2/1/2020
Effluent Gross	+37.079167	+ 37 4' 45" 0	-88.781111	- 88 46' 52" 0	2/1/2020
Effluent Gross	+37.079167	+ 37 4' 45" 0	-88.781111	- 88 46' 52" 0	2/1/2020
Effluent Gross	+37.079167	+ 37 4' 45" 0	-88.781111	- 88 46' 52" 0	2/1/2020
Effluent Gross	+37.079167	+ 37 4' 45" 0	-88.781111	- 88 46' 52" 0	2/1/2020
Effluent Gross	37.079167	+ 37 4' 45" 0	-88.781111	- 88 46' 52" 0	11/1/2014
Effluent Gross	37.079167	+ 37 4' 45" 0	-88.781111	- 88 46' 52" 0	11/1/2014
Effluent Gross	37.079167	+ 37 4' 45" 0	-88.781111	- 88 46' 52" 0	11/1/2014
Effluent Gross	37.079167	+ 37 4' 45" 0	-88.781111	- 88 46' 52" 0	11/1/2014
Effluent Gross	37.079167	+ 37 4' 45" 0	-88.781111	- 88 46' 52" 0	11/1/2014
Effluent Gross	37.079167	+ 37 4' 45" 0	-88.781111	- 88 46' 52" 0	11/1/2014
Effluent Gross	37.079167	+ 37 4' 45" 0	-88.781111	- 88 46' 52" 0	11/1/2014
Effluent Gross	37.079167	+ 37 4' 45" 0	-88.781111	- 88 46' 52" 0	11/1/2014
Effluent Gross	37.079167	+ 37 4' 45" 0	-88.781111	- 88 46' 52" 0	11/1/2014
Effluent Gross	37.079167	+ 37 4' 45" 0	-88.781111	- 88 46' 52" 0	11/1/2014
Effluent Gross	37.079167	+ 37 4' 45" 0	-88.781111	- 88 46' 52" 0	11/1/2014
Effluent Gross	37.079167	+ 37 4' 45" 0	-88.781111	- 88 46' 52" 0	11/1/2014
Effluent Gross	37.079167	+ 37 4' 45" 0	-88.781111	- 88 46' 52" 0	11/1/2014
Effluent Gross	37.079167	+ 37 4' 45" 0	-88.781111	- 88 46' 52" 0	11/1/2014
Effluent Gross	37.079167	+ 37 4' 45" 0	-88.781111	- 88 46' 52" 0	11/1/2014
Effluent Gross	37.079167	+ 37 4' 45" 0	-88.781111	- 88 46' 52" 0	11/1/2014
Effluent Gross	37.079167	+ 37 4' 45" 0	-88.781111	- 88 46' 52" 0	11/1/2014
Effluent Gross	37.079167	+ 37 4' 45" 0	-88.781111	- 88 46' 52" 0	11/1/2014
Effluent Gross	37.079167	+ 37 4' 45" 0	-88.781111	- 88 46' 52" 0	11/1/2014
Effluent Gross	37.079167	+ 37 4' 45" 0	-88.781111	- 88 46' 52" 0	11/1/2014
Effluent Gross	37.079167	+ 37 4' 45" 0	-88.781111	- 88 46' 52" 0	11/1/2014
Effluent Gross	37.079167	+ 37 4' 45" 0	-88.781111	- 88 46' 52" 0	11/1/2014
Effluent Gross	37.079167	+ 37 4' 45" 0	-88.781111	- 88 46' 52" 0	11/1/2014

Effluent Gross	37.079167	+ 37 4' 45" 0	-88.781111	- 88 46' 52" 0	11/1/2014
Effluent Gross	37.079167	+ 37 4' 45" 0	-88.781111	- 88 46' 52" 0	11/1/2014

Limit End Date	Parameter Code	Limit Season ID	Parameter Desc	nit Sample Type Co	equency of Analys
1/31/2025	00300	0	Oxygen, dissolved [	GR	01/30
1/31/2025	00400	0	pH	GR	01/30
1/31/2025	00400	0	pH	GR	01/30
1/31/2025	00530	0	Solids, total suspen	CP	01/30
1/31/2025	00530	0	Solids, total suspen	CP	01/30
1/31/2025	00610	1	Nitrogen, ammonia	CP	01/30
1/31/2025	00610	1	Nitrogen, ammonia	CP	01/30
1/31/2025	00610	2	Nitrogen, ammonia	CP	01/30
1/31/2025	00610	2	Nitrogen, ammonia	CP	01/30
1/31/2025	50050	0	Flow, in conduit or t	IN	01/30
1/31/2025	50050	0	Flow, in conduit or t	IN	01/30
1/31/2025	50060	0	Chlorine, total residu	GR	01/30
1/31/2025	50060	0	Chlorine, total residu	GR	01/30
1/31/2025	51040	0	E. coli	GR	01/30
1/31/2025	51040	0	E. coli	GR	01/30
1/31/2025	80082	0	BOD, carbonaceous	CP	01/30
1/31/2025	80082	0	BOD, carbonaceous	CP	01/30
10/31/2019	00300	0	Oxygen, dissolved [	GR	01/30
10/31/2019	00400	0	pH	GR	01/30
10/31/2019	00400	0	pH	GR	01/30
10/31/2019	00530	0	Solids, total suspen	24	01/30
10/31/2019	00530	0	Solids, total suspen	24	01/30
10/31/2019	00530	0	Solids, total suspen	24	01/30
10/31/2019	00530	0	Solids, total suspen	24	01/30
10/31/2019	00610	1	Nitrogen, ammonia	24	01/30
10/31/2019	00610	1	Nitrogen, ammonia	24	01/30
10/31/2019	00610	1	Nitrogen, ammonia	24	01/30
10/31/2019	00610	1	Nitrogen, ammonia	24	01/30
10/31/2019	00610	2	Nitrogen, ammonia	24	01/30
10/31/2019	00610	2	Nitrogen, ammonia	24	01/30
10/31/2019	00610	2	Nitrogen, ammonia	24	01/30
10/31/2019	00610	2	Nitrogen, ammonia	24	01/30
10/31/2019	50050	0	Flow, in conduit or t	IN	01/30
10/31/2019	50050	0	Flow, in conduit or t	IN	01/30
10/31/2019	50060	0	Chlorine, total residu	GR	01/30
10/31/2019	50060	0	Chlorine, total residu	GR	01/30
10/31/2019	51040	0	E. coli	GR	01/30
10/31/2019	51040	0	E. coli	GR	01/30
10/31/2019	80082	0	BOD, carbonaceous	24	01/30
10/31/2019	80082	0	BOD, carbonaceous	24	01/30

10/31/2019	80082	0	BOD, carbonaceous	24	01/30
10/31/2019	80082	0	BOD, carbonaceous	24	01/30

requency of Analys	Limit Unit Code	Limit Unit Desc	imit Unit Short Des	Limit Value	tatistical Base Cod
Monthly	19	Milligrams per Liter	mg/L	7.	IB
Monthly	12	Standard Units	SU	6.	ME
Monthly	12	Standard Units	SU	9.	MB
Monthly	19	Milligrams per Liter	mg/L	30.	MK
Monthly	19	Milligrams per Liter	mg/L	45.	MS
Monthly	19	Milligrams per Liter	mg/L	2.	MK
Monthly	19	Milligrams per Liter	mg/L	3.	DD
Monthly	19	Milligrams per Liter	mg/L	9.	MK
Monthly	19	Milligrams per Liter	mg/L	13.5	DD
Monthly	03	Million Gallons per D	MGD		DD
Monthly	03	Million Gallons per D	MGD		MK
Monthly	19	Milligrams per Liter	mg/L	.011	MK
Monthly	19	Milligrams per Liter	mg/L	.019	DD
Monthly	13	Number per 100 Mil	#/100mL	130.	3D
Monthly	13	Number per 100 Mil	#/100mL	240.	7B
Monthly	19	Milligrams per Liter	mg/L	10.	MK
Monthly	19	Milligrams per Liter	mg/L	15.	MS
Monthly	19	Milligrams per Liter	mg/L	7.	IB
Monthly	12	Standard Units	SU	6.	ME
Monthly	12	Standard Units	SU	9.	MB
Monthly	19	Milligrams per Liter	mg/L	30.	MK
Monthly	19	Milligrams per Liter	mg/L	45.	MS
Monthly	26	Pounds per Day	lb/d	6.3	MK
Monthly	26	Pounds per Day	lb/d	9.4	MS
Monthly	19	Milligrams per Liter	mg/L	2.	MK
Monthly	19	Milligrams per Liter	mg/L	3.	MS
Monthly	26	Pounds per Day	lb/d	.4	MK
Monthly	26	Pounds per Day	lb/d	.6	MS
Monthly	19	Milligrams per Liter	mg/L	9.	MK
Monthly	19	Milligrams per Liter	mg/L	13.5	MS
Monthly	26	Pounds per Day	lb/d	1.9	MK
Monthly	26	Pounds per Day	lb/d	2.8	MS
Monthly	03	Million Gallons per D	MGD		MK
Monthly	03	Million Gallons per D	MGD		MS
Monthly	19	Milligrams per Liter	mg/L	.011	MK
Monthly	19	Milligrams per Liter	mg/L	.019	MS
Monthly	13	Number per 100 Mil	#/100mL	130.	3D
Monthly	13	Number per 100 Mil	#/100mL	240.	7B
Monthly	19	Milligrams per Liter	mg/L	10.	MK
Monthly	19	Milligrams per Liter	mg/L	15.	MS

Monthly	26	Pounds per Day	lb/d	2.1	MK
Monthly	26	Pounds per Day	lb/d	3.1	MS

istical Base Short D	istical Base Long D	istical Base Type C	DMR Comment	Modification Effect	Modification Type
INST MIN	Instantaneous Minin	MIN			
MINIMUM	Minimum	MIN			
MAXIMUM	Maximum	MAX			
MO AVG	Monthly Average	AVG			
MX WK AV	Maximum Weekly A	MAX			
MO AVG	Monthly Average	AVG			
DAILY MX	Daily Maximum	MAX			
MO AVG	Monthly Average	AVG			
DAILY MX	Daily Maximum	MAX			
DAILY MX	Daily Maximum	MAX			
MO AVG	Monthly Average	AVG			
MO AVG	Monthly Average	AVG			
DAILY MX	Daily Maximum	MAX			
30DA GEO	30 Day Geometric	AVG			
7 DA GEO	7 Day Geometric	AVG			
MO AVG	Monthly Average	AVG			
MX WK AV	Maximum Weekly A	MAX			
INST MIN	Instantaneous Minin	MIN			
MINIMUM	Minimum	MIN			
MAXIMUM	Maximum	MAX			
MO AVG	Monthly Average	AVG			
MX WK AV	Maximum Weekly A	MAX			
MO AVG	Monthly Average	AVG			
MX WK AV	Maximum Weekly A	MAX			
MO AVG	Monthly Average	AVG			
MX WK AV	Maximum Weekly A	MAX			
MO AVG	Monthly Average	AVG			
MX WK AV	Maximum Weekly A	MAX			
MO AVG	Monthly Average	AVG			
MX WK AV	Maximum Weekly A	MAX			
MO AVG	Monthly Average	AVG			
MX WK AV	Maximum Weekly A	MAX			
MO AVG	Monthly Average	AVG			
MX WK AV	Maximum Weekly A	MAX			
MO AVG	Monthly Average	AVG			
MX WK AV	Maximum Weekly A	MAX			
30DA GEO	30 Day Geometric	AVG			
7 DA GEO	7 Day Geometric	AVG			
MO AVG	Monthly Average	AVG			
MX WK AV	Maximum Weekly A	MAX			

MO AVG	Monthly Average	AVG			
MX WK AV	Maximum Weekly A	MAX			

Modification Type	Modification Effect	Modification Type	Modification Type

Environmental Protection Agency
Integrated Compliance Information System
DMR Data Report

Version 1.0, modified 08/12/2011
Created Date: 05/02/2011
Last Refresh Date: 04/16/2021

Report Selection Criteri

NPDES ID(s): KY0083755
State Code: KY
Region Code(s):
SIC Code(s):
NAICS Code(s):
Major/Minor Indicator:
County(ies):
Permit Type(s):
Permit Status(es):
Monitoring Period Date Range: 02/01/2016 - 04/
Violation Type: All Data
Parameter Code(s):
State Water Body(ies):

NODI Code	Acceptable?
1	N
2	Y
3	Y
4	Y
5	Y
6	N
7	Y
8	N
9	Y
A	Y
B	Y
C	Y
D	N
E	N
F	Y
G	N
H	N
I	Y
J	Y
K	Y
L	N
M	N
N	Y
P	N
Q	Y
R	Y
S	Y
T	Y
V	Y

W	Y
X	N
Y	Y
Z	Y

16/2021

NODI Desc
Wrong Flow
Operation Shutdown
Special Report Attached
Discharge to Lagoon/Groundwater
Frozen Conditions
State-specific No Data Indicator - Invalid
No Influent
Other (See Comments)
Conditional Monitoring - Not Required This Period
General Permit Exemption
Below Detection Limit/No Detection
No Discharge
Lost Sample/Data Not Available
Failed to Sample/Required Analysis Not Conducted
Insufficient Flow for Sampling
Sampling Equipment Failure
Invalid Test
Land Applied
Recycled - Water-Closed System
Natural Disaster
DMR Received but not Entered
Laboratory Error
Not Constructed
Laboratory Error or Invalid Test
Not Quantifiable
Administratively Resolved
Fire Conditions
Environmental Conditions - Monitoring Not Possible
Weather Related

Dry Lysimeter/Well
Parameter/Value Not Reported
State-specific No Data Indicator - Valid
COVID19 valid Mar-Aug 2020 monitoring

NPDES ID	State Code	Region Code	Permit Name	Permittee Address	Facility Name	County	Major Minor Indicator	Permit Type	Permit Status	Federal Grant Flag	Primary SIC Code	Primary NAICS Code	State Water Body	Lat/Long.Latitude in Decimal Degrees	Lat/Long.Longitude in Decimal Degrees	Limit Set	Param Cd - MLC - Season ID	Parameter	Mon. Loc. Desc.	Limit Type Code
KY0083755	KY	04	Timberland Subdivision WWTP	1650 Des Peres Rd Ste 303 St Louis, MO 63131	TIMBERLAND SUBDIVISION WWTP	McCracken	Minor	NPDES Individual Permit	Admin Continued	N	6552	237210	05140206-MASSAC CRK / WEST FORK	37.07915	-88.77534	001-1	00300-1-0	Oxygen, dissolved [DO]	Effluent Gross	ENF
KY0083755	KY	04	Timberland Subdivision WWTP	1650 Des Peres Rd Ste 303 St Louis, MO 63131	TIMBERLAND SUBDIVISION WWTP	McCracken	Minor	NPDES Individual Permit	Effective	N	6552	237210	05140206-MASSAC CRK / WEST FORK	37.07915	-88.77534	001-1	00300-1-0	Oxygen, dissolved [DO]	Effluent Gross	ENF
KY0083755	KY	04	Timberland Subdivision WWTP	1650 Des Peres Rd Ste 303 St Louis, MO 63131	TIMBERLAND SUBDIVISION WWTP	McCracken	Minor	NPDES Individual Permit	Admin Continued	N	6552	237210	05140206-MASSAC CRK / WEST FORK	37.07915	-88.77534	001-1	00400-1-0	pH	Effluent Gross	ENF
KY0083755	KY	04	Timberland Subdivision WWTP	1650 Des Peres Rd Ste 303 St Louis, MO 63131	TIMBERLAND SUBDIVISION WWTP	McCracken	Minor	NPDES Individual Permit	Effective	N	6552	237210	05140206-MASSAC CRK / WEST FORK	37.07915	-88.77534	001-1	00400-1-0	pH	Effluent Gross	ENF
KY0083755	KY	04	Timberland Subdivision WWTP	1650 Des Peres Rd Ste 303 St Louis, MO 63131	TIMBERLAND SUBDIVISION WWTP	McCracken	Minor	NPDES Individual Permit	Admin Continued	N	6552	237210	05140206-MASSAC CRK / WEST FORK	37.07915	-88.77534	001-1	00530-1-0	Solids, total suspended	Effluent Gross	ENF
KY0083755	KY	04	Timberland Subdivision WWTP	1650 Des Peres Rd Ste 303 St Louis, MO 63131	TIMBERLAND SUBDIVISION WWTP	McCracken	Minor	NPDES Individual Permit	Effective	N	6552	237210	05140206-MASSAC CRK / WEST FORK	37.07915	-88.77534	001-1	00530-1-0	Solids, total suspended	Effluent Gross	ENF
KY0083755	KY	04	Timberland Subdivision WWTP	1650 Des Peres Rd Ste 303 St Louis, MO 63131	TIMBERLAND SUBDIVISION WWTP	McCracken	Minor	NPDES Individual Permit	Admin Continued	N	6552	237210	05140206-MASSAC CRK / WEST FORK	37.07915	-88.77534	001-1	00610-1-1	Nitrogen, ammonia total [as N]	Effluent Gross	ENF
KY0083755	KY	04	Timberland Subdivision WWTP	1650 Des Peres Rd Ste 303 St Louis, MO 63131	TIMBERLAND SUBDIVISION WWTP	McCracken	Minor	NPDES Individual Permit	Effective	N	6552	237210	05140206-MASSAC CRK / WEST FORK	37.07915	-88.77534	001-1	00610-1-1	Nitrogen, ammonia total [as N]	Effluent Gross	ENF
KY0083755	KY	04	Timberland Subdivision WWTP	1650 Des Peres Rd Ste 303 St Louis, MO 63131	TIMBERLAND SUBDIVISION WWTP	McCracken	Minor	NPDES Individual Permit	Admin Continued	N	6552	237210	05140206-MASSAC CRK / WEST FORK	37.07915	-88.77534	001-1	00610-1-2	Nitrogen, ammonia total [as N]	Effluent Gross	ENF
KY0083755	KY	04	Timberland Subdivision WWTP	1650 Des Peres Rd Ste 303 St Louis, MO 63131	TIMBERLAND SUBDIVISION WWTP	McCracken	Minor	NPDES Individual Permit	Effective	N	6552	237210	05140206-MASSAC CRK / WEST FORK	37.07915	-88.77534	001-1	00610-1-2	Nitrogen, ammonia total [as N]	Effluent Gross	ENF
KY0083755	KY	04	Timberland Subdivision WWTP	1650 Des Peres Rd Ste 303 St Louis, MO 63131	TIMBERLAND SUBDIVISION WWTP	McCracken	Minor	NPDES Individual Permit	Admin Continued	N	6552	237210	05140206-MASSAC CRK / WEST FORK	37.07915	-88.77534	001-1	50050-1-0	Flow, in conduit or thru treatment plant	Effluent Gross	ENF
KY0083755	KY	04	Timberland Subdivision WWTP	1650 Des Peres Rd Ste 303 St Louis, MO 63131	TIMBERLAND SUBDIVISION WWTP	McCracken	Minor	NPDES Individual Permit	Effective	N	6552	237210	05140206-MASSAC CRK / WEST FORK	37.07915	-88.77534	001-1	50050-1-0	Flow, in conduit or thru treatment plant	Effluent Gross	ENF
KY0083755	KY	04	Timberland Subdivision WWTP	1650 Des Peres Rd Ste 303 St Louis, MO 63131	TIMBERLAND SUBDIVISION WWTP	McCracken	Minor	NPDES Individual Permit	Admin Continued	N	6552	237210	05140206-MASSAC CRK / WEST FORK	37.07915	-88.77534	001-1	50060-1-0	Chlorine, total residual	Effluent Gross	ENF
KY0083755	KY	04	Timberland Subdivision WWTP	1650 Des Peres Rd Ste 303 St Louis, MO 63131	TIMBERLAND SUBDIVISION WWTP	McCracken	Minor	NPDES Individual Permit	Effective	N	6552	237210	05140206-MASSAC CRK / WEST FORK	37.07915	-88.77534	001-1	50060-1-0	Chlorine, total residual	Effluent Gross	ENF
KY0083755	KY	04	Timberland Subdivision WWTP	1650 Des Peres Rd Ste 303 St Louis, MO 63131	TIMBERLAND SUBDIVISION WWTP	McCracken	Minor	NPDES Individual Permit	Admin Continued	N	6552	237210	05140206-MASSAC CRK / WEST FORK	37.07915	-88.77534	001-1	51040-1-0	E. coli	Effluent Gross	ENF
KY0083755	KY	04	Timberland Subdivision WWTP	1650 Des Peres Rd Ste 303 St Louis, MO 63131	TIMBERLAND SUBDIVISION WWTP	McCracken	Minor	NPDES Individual Permit	Effective	N	6552	237210	05140206-MASSAC CRK / WEST FORK	37.07915	-88.77534	001-1	51040-1-0	E. coli	Effluent Gross	ENF
KY0083755	KY	04	Timberland Subdivision WWTP	1650 Des Peres Rd Ste 303 St Louis, MO 63131	TIMBERLAND SUBDIVISION WWTP	McCracken	Minor	NPDES Individual Permit	Admin Continued	N	6552	237210	05140206-MASSAC CRK / WEST FORK	37.07915	-88.77534	001-1	80082-1-0	BOD, carbonaceous [5 day, 20 C]	Effluent Gross	ENF
KY0083755	KY	04	Timberland Subdivision WWTP	1650 Des Peres Rd Ste 303 St Louis, MO 63131	TIMBERLAND SUBDIVISION WWTP	McCracken	Minor	NPDES Individual Permit	Effective	N	6552	237210	05140206-MASSAC CRK / WEST FORK	37.07915	-88.77534	001-1	80082-1-0	BOD, carbonaceous [5 day, 20 C]	Effluent Gross	ENF

NPDES ID	Permit Name	County Name	Perm Feature ID-Limit Set	Mon. Period End Date	Parameter Desc	Param Cd - MLC - Season ID	Monitoring Location Desc	Worst % exced.	Quantity 1	Q1 DMR Value Unit Short Desc	Quantity 2	Q2 DMR Value Unit Short Desc	Limit Value - Quantity Units	Concentration 1	C1 DMR Value Unit Short Desc	Concentration 2	C2 DMR Value Unit Short Desc	Concentration 3	C3 DMR Value Unit Short Desc	Limit Value - Concentration Units	Effluent Vio. Exists
KY0083755	Timberland Subdivision WWTP	McCracken	001-1	02/28/2021	Oxygen, dissolved [DO]	00300-1-0	Effluent Gross							11.4	mg/L					mg/L	N
KY0083755	Timberland Subdivision WWTP	McCracken	001-1	01/31/2021	Oxygen, dissolved [DO]	00300-1-0	Effluent Gross							12	mg/L					mg/L	N
KY0083755	Timberland Subdivision WWTP	McCracken	001-1	12/31/2020	Oxygen, dissolved [DO]	00300-1-0	Effluent Gross	13						6.1	mg/L					mg/L	Y
KY0083755	Timberland Subdivision WWTP	McCracken	001-1	11/30/2020	Oxygen, dissolved [DO]	00300-1-0	Effluent Gross							8.71	mg/L					mg/L	N
KY0083755	Timberland Subdivision WWTP	McCracken	001-1	10/31/2020	Oxygen, dissolved [DO]	00300-1-0	Effluent Gross							7.41	mg/L					mg/L	N
KY0083755	Timberland Subdivision WWTP	McCracken	001-1	09/30/2020	Oxygen, dissolved [DO]	00300-1-0	Effluent Gross	11						6.26	mg/L					mg/L	Y
KY0083755	Timberland Subdivision WWTP	McCracken	001-1	08/31/2020	Oxygen, dissolved [DO]	00300-1-0	Effluent Gross	8						6.43	mg/L					mg/L	Y
KY0083755	Timberland Subdivision WWTP	McCracken	001-1	07/31/2020	Oxygen, dissolved [DO]	00300-1-0	Effluent Gross	10						6.3	mg/L					mg/L	Y
KY0083755	Timberland Subdivision WWTP	McCracken	001-1	06/30/2020	Oxygen, dissolved [DO]	00300-1-0	Effluent Gross	3						6.8	mg/L					mg/L	Y
KY0083755	Timberland Subdivision WWTP	McCracken	001-1	05/31/2020	Oxygen, dissolved [DO]	00300-1-0	Effluent Gross	14						6.02	mg/L					mg/L	Y
KY0083755	Timberland Subdivision WWTP	McCracken	001-1	04/30/2020	Oxygen, dissolved [DO]	00300-1-0	Effluent Gross							7.7	mg/L					mg/L	N
KY0083755	Timberland Subdivision WWTP	McCracken	001-1	03/31/2020	Oxygen, dissolved [DO]	00300-1-0	Effluent Gross							7.4	mg/L					mg/L	N
KY0083755	Timberland Subdivision WWTP	McCracken	001-1	02/29/2020	Oxygen, dissolved [DO]	00300-1-0	Effluent Gross							7.4	mg/L					mg/L	N
KY0083755	Timberland Subdivision WWTP	McCracken	001-1	01/31/2020	Oxygen, dissolved [DO]	00300-1-0	Effluent Gross							7.6	mg/L					mg/L	N
KY0083755	Timberland Subdivision WWTP	McCracken	001-1	12/31/2019	Oxygen, dissolved [DO]	00300-1-0	Effluent Gross							8.2	mg/L					mg/L	N
KY0083755	Timberland Subdivision WWTP	McCracken	001-1	11/30/2019	Oxygen, dissolved [DO]	00300-1-0	Effluent Gross							7.2	mg/L					mg/L	N
KY0083755	Timberland Subdivision WWTP	McCracken	001-1	10/31/2019	Oxygen, dissolved [DO]	00300-1-0	Effluent Gross							7.2	mg/L					mg/L	N
KY0083755	Timberland Subdivision WWTP	McCracken	001-1	09/30/2019	Oxygen, dissolved [DO]	00300-1-0	Effluent Gross							7.4	mg/L					mg/L	N
KY0083755	Timberland Subdivision WWTP	McCracken	001-1	08/31/2019	Oxygen, dissolved [DO]	00300-1-0	Effluent Gross							7.1	mg/L					mg/L	N
KY0083755	Timberland Subdivision WWTP	McCracken	001-1	07/31/2019	Oxygen, dissolved [DO]	00300-1-0	Effluent Gross							7.2	mg/L					mg/L	N
KY0083755	Timberland Subdivision WWTP	McCracken	001-1	06/30/2019	Oxygen, dissolved [DO]	00300-1-0	Effluent Gross							7.2	mg/L					mg/L	N
KY0083755	Timberland Subdivision WWTP	McCracken	001-1	05/31/2019	Oxygen, dissolved [DO]	00300-1-0	Effluent Gross							7.4	mg/L					mg/L	N
KY0083755	Timberland Subdivision WWTP	McCracken	001-1	04/30/2019	Oxygen, dissolved [DO]	00300-1-0	Effluent Gross							7.4	mg/L					mg/L	N
KY0083755	Timberland Subdivision WWTP	McCracken	001-1	03/31/2019	Oxygen, dissolved [DO]	00300-1-0	Effluent Gross							7.4	mg/L					mg/L	N
KY0083755	Timberland Subdivision WWTP	McCracken	001-1	02/28/2019	Oxygen, dissolved [DO]	00300-1-0	Effluent Gross							7.6	mg/L					mg/L	N
KY0083755	Timberland Subdivision WWTP	McCracken	001-1	01/31/2019	Oxygen, dissolved [DO]	00300-1-0	Effluent Gross							7.5	mg/L					mg/L	N
KY0083755	Timberland Subdivision WWTP	McCracken	001-1	12/31/2018	Oxygen, dissolved [DO]	00300-1-0	Effluent Gross							7.4	mg/L					mg/L	N
KY0083755	Timberland Subdivision WWTP	McCracken	001-1	11/30/2018	Oxygen, dissolved [DO]	00300-1-0	Effluent Gross							7.2	mg/L					mg/L	N
KY0083755	Timberland Subdivision WWTP	McCracken	001-1	10/31/2018	Oxygen, dissolved [DO]	00300-1-0	Effluent Gross							7.1	mg/L					mg/L	N
KY0083755	Timberland Subdivision WWTP	McCracken	001-1	09/30/2018	Oxygen, dissolved [DO]	00300-1-0	Effluent Gross							7.2	mg/L					mg/L	N
KY0083755	Timberland Subdivision WWTP	McCracken	001-1	08/31/2018	Oxygen, dissolved [DO]	00300-1-0	Effluent Gross							7.2	mg/L					mg/L	N
KY0083755	Timberland Subdivision WWTP	McCracken	001-1	07/31/2018	Oxygen, dissolved [DO]	00300-1-0	Effluent Gross							7.1	mg/L					mg/L	N
KY0083755	Timberland Subdivision WWTP	McCracken	001-1	06/30/2018	Oxygen, dissolved [DO]	00300-1-0	Effluent Gross							7.3	mg/L					mg/L	N
KY0083755	Timberland Subdivision WWTP	McCracken	001-1	05/31/2018	Oxygen, dissolved [DO]	00300-1-0	Effluent Gross							7.4	mg/L					mg/L	N
KY0083755	Timberland Subdivision WWTP	McCracken	001-1	04/30/2018	Oxygen, dissolved [DO]	00300-1-0	Effluent Gross							7.6	mg/L					mg/L	N
KY0083755	Timberland Subdivision WWTP	McCracken	001-1	03/31/2018	Oxygen, dissolved [DO]	00300-1-0	Effluent Gross							7.6	mg/L					mg/L	N
KY0083755	Timberland Subdivision WWTP	McCracken	001-1	02/28/2018	Oxygen, dissolved [DO]	00300-1-0	Effluent Gross							7.5	mg/L					mg/L	N
KY0083755	Timberland Subdivision WWTP	McCracken	001-1	01/31/2018	Oxygen, dissolved [DO]	00300-1-0	Effluent Gross							7.3	mg/L					mg/L	N
KY0083755	Timberland Subdivision WWTP	McCracken	001-1	12/31/2017	Oxygen, dissolved [DO]	00300-1-0	Effluent Gross							7.4	mg/L					mg/L	N
KY0083755	Timberland Subdivision WWTP	McCracken	001-1	11/30/2017	Oxygen, dissolved [DO]	00300-1-0	Effluent Gross							7.2	mg/L					mg/L	N
KY0083755	Timberland Subdivision WWTP	McCracken	001-1	10/31/2017	Oxygen, dissolved [DO]	00300-1-0	Effluent Gross							7.2	mg/L					mg/L	N
KY0083755	Timberland Subdivision WWTP	McCracken	001-1	09/30/2017	Oxygen, dissolved [DO]	00300-1-0	Effluent Gross							7.2	mg/L					mg/L	N
KY0083755	Timberland Subdivision WWTP	McCracken	001-1	08/31/2017	Oxygen, dissolved [DO]	00300-1-0	Effluent Gross							7	mg/L					mg/L	N
KY0083755	Timberland Subdivision WWTP	McCracken	001-1	07/31/2017	Oxygen, dissolved [DO]	00300-1-0	Effluent Gross							7	mg/L					mg/L	N
KY0083755	Timberland Subdivision WWTP	McCracken	001-1	06/30/2017	Oxygen, dissolved [DO]	00300-1-0	Effluent Gross							7.1	mg/L					mg/L	N
KY0083755	Timberland Subdivision WWTP	McCracken	001-1	05/31/2017	Oxygen, dissolved [DO]	00300-1-0	Effluent Gross							7.4	mg/L					mg/L	N
KY0083755	Timberland Subdivision WWTP	McCracken	001-1	04/30/2017	Oxygen, dissolved [DO]	00300-1-0	Effluent Gross							7.2	mg/L					mg/L	N
KY0083755	Timberland Subdivision WWTP	McCracken	001-1	03/31/2017	Oxygen, dissolved [DO]	00300-1-0	Effluent Gross							7.2	mg/L					mg/L	N
KY0083755	Timberland Subdivision WWTP	McCracken	001-1	02/28/2017	Oxygen, dissolved [DO]	00300-1-0	Effluent Gross							7.4	mg/L					mg/L	N
KY0083755	Timberland Subdivision WWTP	McCracken	001-1	01/31/2017	Oxygen, dissolved [DO]	00300-1-0	Effluent Gross							7.5	mg/L					mg/L	N
KY0083755	Timberland Subdivision WWTP	McCracken	001-1	12/31/2016	Oxygen, dissolved [DO]	00300-1-0	Effluent Gross							8.1	mg/L					mg/L	N
KY0083755	Timberland Subdivision WWTP	McCracken	001-1	11/30/2016	Oxygen, dissolved [DO]	00300-1-0	Effluent Gross							7.1	mg/L					mg/L	N
KY0083755	Timberland Subdivision WWTP	McCracken	001-1	10/31/2016	Oxygen, dissolved [DO]	00300-1-0	Effluent Gross							7.6	mg/L					mg/L	N
KY0083755	Timberland Subdivision WWTP	McCracken	001-1	09/30/2016	Oxygen, dissolved [DO]	00300-1-0	Effluent Gross							7.2	mg/L					mg/L	N
KY0083755	Timberland Subdivision WWTP	McCracken	001-1	08/31/2016	Oxygen, dissolved [DO]	00300-1-0	Effluent Gross							7.4	mg/L					mg/L	N
KY0083755	Timberland Subdivision WWTP	McCracken	001-1	07/31/2016	Oxygen, dissolved [DO]	00300-1-0	Effluent Gross							7.1	mg/L					mg/L	N
KY0083755	Timberland Subdivision WWTP	McCracken	001-1	06/30/2016	Oxygen, dissolved [DO]	00300-1-0	Effluent Gross							7.4	mg/L					mg/L	N
KY0083755	Timberland Subdivision WWTP	McCracken	001-1	05/31/2016	Oxygen, dissolved [DO]	00300-1-0	Effluent Gross							7.4	mg/L					mg/L	N
KY0083755	Timberland Subdivision WWTP	McCracken	001-1	04/30/2016	Oxygen, dissolved [DO]	00300-1-0	Effluent Gross							7.2	mg/L					mg/L	N
KY0083755	Timberland Subdivision WWTP	McCracken	001-1	03/31/2016	Oxygen, dissolved [DO]	00300-1-0	Effluent Gross							7.2	mg/L					mg/L	N
KY0083755	Timberland Subdivision WWTP	McCracken	001-1	02/29/2016	Oxygen, dissolved [DO]	00300-1-0	Effluent Gross							7.9	mg/L					mg/L	N
KY0083755	Timberland Subdivision WWTP	McCracken	001-1	02/28/2021	pH	00400-1-0	Effluent Gross							7.3	SU					SU	N
KY0083755	Timberland Subdivision WWTP	McCracken	001-1	02/28/2021	pH	00400-1-0	Effluent Gross											7.3	SU	SU	N
KY0083755	Timberland Subdivision WWTP	McCracken	001-1	01/31/2021	pH	00400-1-0	Effluent Gross							6.87	SU					SU	N
KY0083755	Timberland Subdivision WWTP	McCracken	001-1	01/31/2021	pH	00400-1-0	Effluent Gross											6.87	SU	SU	N
KY0083755	Timberland Subdivision WWTP	McCracken	001-1	12/31/2020	pH	00400-1-0	Effluent Gross							6.89	SU					SU	N
KY0083755	Timberland Subdivision WWTP	McCracken	001-1	12/31/2020	pH	00400-1-0	Effluent Gross											6.89	SU	SU	N
KY0083755	Timberland Subdivision WWTP	McCracken	001-1	11/30/2020	pH	00400-1-0	Effluent Gross							7.11	SU					SU	N
KY0083755	Timberland Subdivision WWTP	McCracken	001-1	11/30/2020	pH	00400-1-0	Effluent Gross											7.11	SU	SU	N
KY0083755	Timberland Subdivision WWTP	McCracken	001-1	10/31/2020	pH	00400-1-0	Effluent Gross							6.98	SU					SU	N
KY0083755	Timberland Subdivision WWTP	McCracken	001-1	10/31/2020	pH	00400-1-0	Effluent Gross											6.98	SU	SU	N
KY0083755	Timberland Subdivision WWTP	McCracken	001-1	09/30/2020	pH	00400-1-0	Effluent Gross							7.17	SU					SU	N
KY0083755	Timberland Subdivision WWTP	McCracken	001-1	09/30/2020	pH	00400-1-0	Effluent Gross											7.33	SU	SU	N
KY0083755	Timberland Subdivision WWTP	McCracken	001-1	08/31/2020	pH	00400-1-0	Effluent Gross							7.63	SU					SU	N
KY0083755	Timberland Subdivision WWTP	McCracken	001-1	08/31/2020	pH	00400-1-0	Effluent Gross											7.73	SU	SU	N
KY0083755	Timberland Subdivision WWTP	McCracken	001-1	07/31/2020	pH	00400-1-0	Effluent Gross							7.79	SU					SU	N
KY0083755	Timberland Subdivision WWTP	McCracken	001-1	07/31/2020	pH	00400-1-0	Effluent Gross											7.79	SU	SU	N
KY0083755	Timberland Subdivision WWTP	McCracken	001-1	06/30/2020	pH	00400-1-0	Effluent Gross							7.1	SU					SU	N
KY0083755	Timberland Subdivision WWTP	McCracken	001-1	06/30/2020	pH	00400-1-0	Effluent Gross											7.1	SU	SU	N
KY0083755	Timberland Subdivision WWTP	McCracken	001-1	05/31/2020	pH	00400-1-0	Effluent Gross							6.96	SU					SU	N
KY0083755	Timberland Subdivision WWTP	McCracken	001-1	05/31/2020	pH	00400-1-0	Effluent Gross											6.96	SU	SU	N
KY0083755	Timberland Subdivision WWTP	McCracken	001-1	04/30/2020	pH	00400-1-0	Effluent Gross							7.34	SU					SU	N
KY0083755	Timberland Subdivision WWTP	McCracken	001-1	04/30/2020	pH	00400-1-0	Effluent Gross											7.34	SU	SU	N
KY0083755	Timberland Subdivision WWTP	McCracken	001-1	03/31/2020	pH	00400-1-0	Effluent Gross							7.1	SU					SU	N
KY0083755	Timberland Subdivision WWTP	McCracken	001-1	03/31/2020	pH	00400-1-0	Effluent Gross											7.1	SU	SU	N
KY0083755	Timberland Subdivision WWTP	McCracken	001-1	02/29/2020	pH	00400-1-0	Effluent Gross							7.1	SU					SU	N

KY0083755	Timberland Subdivision WWTP	McCracken	001-1	02/29/2020	pH	00400-1-0	Effluent Gross											7.1	SU	SU	N
KY0083755	Timberland Subdivision WWTP	McCracken	001-1	01/31/2020	pH	00400-1-0	Effluent Gross							7.2	SU					SU	N
KY0083755	Timberland Subdivision WWTP	McCracken	001-1	01/31/2020	pH	00400-1-0	Effluent Gross											7.2	SU	SU	N
KY0083755	Timberland Subdivision WWTP	McCracken	001-1	12/31/2019	pH	00400-1-0	Effluent Gross							7.2	SU					SU	N
KY0083755	Timberland Subdivision WWTP	McCracken	001-1	12/31/2019	pH	00400-1-0	Effluent Gross											7.2	SU	SU	N
KY0083755	Timberland Subdivision WWTP	McCracken	001-1	11/30/2019	pH	00400-1-0	Effluent Gross							7.5	SU					SU	N
KY0083755	Timberland Subdivision WWTP	McCracken	001-1	11/30/2019	pH	00400-1-0	Effluent Gross											7.5	SU	SU	N
KY0083755	Timberland Subdivision WWTP	McCracken	001-1	10/31/2019	pH	00400-1-0	Effluent Gross							7.3	SU					SU	N
KY0083755	Timberland Subdivision WWTP	McCracken	001-1	10/31/2019	pH	00400-1-0	Effluent Gross											7.3	SU	SU	N
KY0083755	Timberland Subdivision WWTP	McCracken	001-1	09/30/2019	pH	00400-1-0	Effluent Gross							7.2	SU					SU	N
KY0083755	Timberland Subdivision WWTP	McCracken	001-1	09/30/2019	pH	00400-1-0	Effluent Gross											7.2	SU	SU	N
KY0083755	Timberland Subdivision WWTP	McCracken	001-1	08/31/2019	pH	00400-1-0	Effluent Gross							7.2	SU					SU	N
KY0083755	Timberland Subdivision WWTP	McCracken	001-1	08/31/2019	pH	00400-1-0	Effluent Gross											7.2	SU	SU	N
KY0083755	Timberland Subdivision WWTP	McCracken	001-1	07/31/2019	pH	00400-1-0	Effluent Gross							7.4	SU					SU	N
KY0083755	Timberland Subdivision WWTP	McCracken	001-1	07/31/2019	pH	00400-1-0	Effluent Gross											7.4	SU	SU	N
KY0083755	Timberland Subdivision WWTP	McCracken	001-1	06/30/2019	pH	00400-1-0	Effluent Gross							7.2	SU					SU	N
KY0083755	Timberland Subdivision WWTP	McCracken	001-1	06/30/2019	pH	00400-1-0	Effluent Gross											7.2	SU	SU	N
KY0083755	Timberland Subdivision WWTP	McCracken	001-1	05/31/2019	pH	00400-1-0	Effluent Gross							7.6	SU					SU	N
KY0083755	Timberland Subdivision WWTP	McCracken	001-1	05/31/2019	pH	00400-1-0	Effluent Gross											7.6	SU	SU	N
KY0083755	Timberland Subdivision WWTP	McCracken	001-1	04/30/2019	pH	00400-1-0	Effluent Gross							6.8	SU					SU	N
KY0083755	Timberland Subdivision WWTP	McCracken	001-1	04/30/2019	pH	00400-1-0	Effluent Gross											6.8	SU	SU	N
KY0083755	Timberland Subdivision WWTP	McCracken	001-1	03/31/2019	pH	00400-1-0	Effluent Gross							7.2	SU					SU	N
KY0083755	Timberland Subdivision WWTP	McCracken	001-1	03/31/2019	pH	00400-1-0	Effluent Gross											7.2	SU	SU	N
KY0083755	Timberland Subdivision WWTP	McCracken	001-1	02/28/2019	pH	00400-1-0	Effluent Gross							7.2	SU					SU	N
KY0083755	Timberland Subdivision WWTP	McCracken	001-1	02/28/2019	pH	00400-1-0	Effluent Gross											7.2	SU	SU	N
KY0083755	Timberland Subdivision WWTP	McCracken	001-1	01/31/2019	pH	00400-1-0	Effluent Gross							7.1	SU					SU	N
KY0083755	Timberland Subdivision WWTP	McCracken	001-1	01/31/2019	pH	00400-1-0	Effluent Gross											7.1	SU	SU	N
KY0083755	Timberland Subdivision WWTP	McCracken	001-1	12/31/2018	pH	00400-1-0	Effluent Gross							6.9	SU					SU	N
KY0083755	Timberland Subdivision WWTP	McCracken	001-1	12/31/2018	pH	00400-1-0	Effluent Gross											6.9	SU	SU	N
KY0083755	Timberland Subdivision WWTP	McCracken	001-1	11/30/2018	pH	00400-1-0	Effluent Gross							7.2	SU					SU	N
KY0083755	Timberland Subdivision WWTP	McCracken	001-1	11/30/2018	pH	00400-1-0	Effluent Gross											7.2	SU	SU	N
KY0083755	Timberland Subdivision WWTP	McCracken	001-1	10/31/2018	pH	00400-1-0	Effluent Gross							6.9	SU					SU	N
KY0083755	Timberland Subdivision WWTP	McCracken	001-1	10/31/2018	pH	00400-1-0	Effluent Gross											6.9	SU	SU	N
KY0083755	Timberland Subdivision WWTP	McCracken	001-1	09/30/2018	pH	00400-1-0	Effluent Gross							7.2	SU					SU	N
KY0083755	Timberland Subdivision WWTP	McCracken	001-1	09/30/2018	pH	00400-1-0	Effluent Gross											7.2	SU	SU	N
KY0083755	Timberland Subdivision WWTP	McCracken	001-1	08/31/2018	pH	00400-1-0	Effluent Gross							7.2	SU					SU	N
KY0083755	Timberland Subdivision WWTP	McCracken	001-1	08/31/2018	pH	00400-1-0	Effluent Gross											7.2	SU	SU	N
KY0083755	Timberland Subdivision WWTP	McCracken	001-1	07/31/2018	pH	00400-1-0	Effluent Gross							6.8	SU					SU	N
KY0083755	Timberland Subdivision WWTP	McCracken	001-1	07/31/2018	pH	00400-1-0	Effluent Gross											6.8	SU	SU	N
KY0083755	Timberland Subdivision WWTP	McCracken	001-1	06/30/2018	pH	00400-1-0	Effluent Gross							7.2	SU					SU	N
KY0083755	Timberland Subdivision WWTP	McCracken	001-1	06/30/2018	pH	00400-1-0	Effluent Gross											7.2	SU	SU	N
KY0083755	Timberland Subdivision WWTP	McCracken	001-1	05/31/2018	pH	00400-1-0	Effluent Gross							7.1	SU					SU	N
KY0083755	Timberland Subdivision WWTP	McCracken	001-1	05/31/2018	pH	00400-1-0	Effluent Gross											7.1	SU	SU	N
KY0083755	Timberland Subdivision WWTP	McCracken	001-1	04/30/2018	pH	00400-1-0	Effluent Gross							7.2	SU					SU	N
KY0083755	Timberland Subdivision WWTP	McCracken	001-1	04/30/2018	pH	00400-1-0	Effluent Gross											7.2	SU	SU	N
KY0083755	Timberland Subdivision WWTP	McCracken	001-1	03/31/2018	pH	00400-1-0	Effluent Gross							7.1	SU					SU	N
KY0083755	Timberland Subdivision WWTP	McCracken	001-1	03/31/2018	pH	00400-1-0	Effluent Gross											7.1	SU	SU	N
KY0083755	Timberland Subdivision WWTP	McCracken	001-1	02/28/2018	pH	00400-1-0	Effluent Gross							7.3	SU					SU	N
KY0083755	Timberland Subdivision WWTP	McCracken	001-1	02/28/2018	pH	00400-1-0	Effluent Gross											7.3	SU	SU	N
KY0083755	Timberland Subdivision WWTP	McCracken	001-1	01/31/2018	pH	00400-1-0	Effluent Gross							7.1	SU					SU	N
KY0083755	Timberland Subdivision WWTP	McCracken	001-1	01/31/2018	pH	00400-1-0	Effluent Gross											7.1	SU	SU	N
KY0083755	Timberland Subdivision WWTP	McCracken	001-1	12/31/2017	pH	00400-1-0	Effluent Gross							7.2	SU					SU	N
KY0083755	Timberland Subdivision WWTP	McCracken	001-1	12/31/2017	pH	00400-1-0	Effluent Gross											7.2	SU	SU	N
KY0083755	Timberland Subdivision WWTP	McCracken	001-1	11/30/2017	pH	00400-1-0	Effluent Gross							7.2	SU					SU	N
KY0083755	Timberland Subdivision WWTP	McCracken	001-1	11/30/2017	pH	00400-1-0	Effluent Gross											7.2	SU	SU	N
KY0083755	Timberland Subdivision WWTP	McCracken	001-1	10/31/2017	pH	00400-1-0	Effluent Gross							7	SU					SU	N
KY0083755	Timberland Subdivision WWTP	McCracken	001-1	10/31/2017	pH	00400-1-0	Effluent Gross											7	SU	SU	N
KY0083755	Timberland Subdivision WWTP	McCracken	001-1	09/30/2017	pH	00400-1-0	Effluent Gross							7.4	SU					SU	N
KY0083755	Timberland Subdivision WWTP	McCracken	001-1	09/30/2017	pH	00400-1-0	Effluent Gross											7.4	SU	SU	N
KY0083755	Timberland Subdivision WWTP	McCracken	001-1	08/31/2017	pH	00400-1-0	Effluent Gross							6.9	SU					SU	N
KY0083755	Timberland Subdivision WWTP	McCracken	001-1	08/31/2017	pH	00400-1-0	Effluent Gross											6.9	SU	SU	N
KY0083755	Timberland Subdivision WWTP	McCracken	001-1	07/31/2017	pH	00400-1-0	Effluent Gross							7.4	SU					SU	N
KY0083755	Timberland Subdivision WWTP	McCracken	001-1	07/31/2017	pH	00400-1-0	Effluent Gross											7.4	SU	SU	N
KY0083755	Timberland Subdivision WWTP	McCracken	001-1	06/30/2017	pH	00400-1-0	Effluent Gross							7.1	SU					SU	N
KY0083755	Timberland Subdivision WWTP	McCracken	001-1	06/30/2017	pH	00400-1-0	Effluent Gross											7.1	SU	SU	N
KY0083755	Timberland Subdivision WWTP	McCracken	001-1	05/31/2017	pH	00400-1-0	Effluent Gross							7.1	SU					SU	N
KY0083755	Timberland Subdivision WWTP	McCracken	001-1	05/31/2017	pH	00400-1-0	Effluent Gross											7.1	SU	SU	N
KY0083755	Timberland Subdivision WWTP	McCracken	001-1	04/30/2017	pH	00400-1-0	Effluent Gross							7.2	SU					SU	N
KY0083755	Timberland Subdivision WWTP	McCracken	001-1	04/30/2017	pH	00400-1-0	Effluent Gross											7.2	SU	SU	N
KY0083755	Timberland Subdivision WWTP	McCracken	001-1	03/31/2017	pH	00400-1-0	Effluent Gross							6.8	SU					SU	N
KY0083755	Timberland Subdivision WWTP	McCracken	001-1	03/31/2017	pH	00400-1-0	Effluent Gross											6.8	SU	SU	N
KY0083755	Timberland Subdivision WWTP	McCracken	001-1	02/28/2017	pH	00400-1-0	Effluent Gross							6.9	SU					SU	N
KY0083755	Timberland Subdivision WWTP	McCracken	001-1	02/28/2017	pH	00400-1-0	Effluent Gross											6.9	SU	SU	N
KY0083755	Timberland Subdivision WWTP	McCracken	001-1	01/31/2017	pH	00400-1-0	Effluent Gross							7	SU					SU	N
KY0083755	Timberland Subdivision WWTP	McCracken	001-1	01/31/2017	pH	00400-1-0	Effluent Gross											7	SU	SU	N
KY0083755	Timberland Subdivision WWTP	McCracken	001-1	12/31/2016	pH	00400-1-0	Effluent Gross							7.1	SU					SU	N
KY0083755	Timberland Subdivision WWTP	McCracken	001-1	12/31/2016	pH	00400-1-0	Effluent Gross											7.1	SU	SU	N
KY0083755	Timberland Subdivision WWTP	McCracken	001-1	11/30/2016	pH	00400-1-0	Effluent Gross							6.9	SU					SU	N
KY0083755	Timberland Subdivision WWTP	McCracken	001-1	11/30/2016	pH	00400-1-0	Effluent Gross											6.9	SU	SU	N
KY0083755	Timberland Subdivision WWTP	McCracken	001-1	10/31/2016	pH	00400-1-0	Effluent Gross							7.1	SU					SU	N
KY0083755	Timberland Subdivision WWTP	McCracken	001-1	10/31/2016	pH	00400-1-0	Effluent Gross											7.1	SU	SU	N
KY0083755	Timberland Subdivision WWTP	McCracken	001-1	09/30/2016	pH	00400-1-0	Effluent Gross							6.9	SU					SU	N
KY0083755	Timberland Subdivision WWTP	McCracken	001-1	09/30/2016	pH	00400-1-0	Effluent Gross											6.9	SU	SU	N
KY0083755	Timberland Subdivision WWTP	McCracken	001-1	08/31/2016	pH	00400-1-0	Effluent Gross							7.2	SU					SU	N
KY0083755	Timberland Subdivision WWTP	McCracken	001-1	08/31/2016	pH	00400-1-0	Effluent Gross											7.2	SU	SU	N
KY0083755	Timberland Subdivision WWTP	McCracken	001-1	07/31/2016	pH	00400-1-0	Effluent Gross							6.8	SU					SU	N
KY0083755	Timberland Subdivision WWTP	McCracken	001-1	07/31/2016	pH	00400-1-0	Effluent Gross											6.8	SU	SU	N
KY0083755	Timberland Subdivision WWTP	McCracken	001-1	06/30/2016	pH	00400-1-0	Effluent Gross							7.1	SU					SU	N
KY0083755	Timberland Subdivision WWTP	McCracken	001-1	06/30/2016	pH	00400-1-0	Effluent Gross											7.1	SU	SU	N
KY0083755	Timberland Subdivision WWTP	McCracken	001-1	05/31/2016	pH	00400-1-0	Effluent Gross							6.7	SU					SU	N

KY0083755	Timberland Subdivision WWTP	McCracken	001-1	05/31/2016	pH	00400-1-0	Effluent Gross											6.7	SU	SU	N
KY0083755	Timberland Subdivision WWTP	McCracken	001-1	04/30/2016	pH	00400-1-0	Effluent Gross							7.2	SU					SU	N
KY0083755	Timberland Subdivision WWTP	McCracken	001-1	04/30/2016	pH	00400-1-0	Effluent Gross											7.2	SU	SU	N
KY0083755	Timberland Subdivision WWTP	McCracken	001-1	03/31/2016	pH	00400-1-0	Effluent Gross							7.2	SU					SU	N
KY0083755	Timberland Subdivision WWTP	McCracken	001-1	03/31/2016	pH	00400-1-0	Effluent Gross											7.2	SU	SU	N
KY0083755	Timberland Subdivision WWTP	McCracken	001-1	02/29/2016	pH	00400-1-0	Effluent Gross							6.7	SU					SU	N
KY0083755	Timberland Subdivision WWTP	McCracken	001-1	02/29/2016	pH	00400-1-0	Effluent Gross											6.7	SU	SU	N
KY0083755	Timberland Subdivision WWTP	McCracken	001-1	02/28/2021	Solids, total suspended	00530-1-0	Effluent Gross	3								31	mg/L			mg/L	Y
KY0083755	Timberland Subdivision WWTP	McCracken	001-1	02/28/2021	Solids, total suspended	00530-1-0	Effluent Gross											31	mg/L	mg/L	N
KY0083755	Timberland Subdivision WWTP	McCracken	001-1	01/31/2021	Solids, total suspended	00530-1-0	Effluent Gross									12	mg/L			mg/L	N
KY0083755	Timberland Subdivision WWTP	McCracken	001-1	01/31/2021	Solids, total suspended	00530-1-0	Effluent Gross											12	mg/L	mg/L	N
KY0083755	Timberland Subdivision WWTP	McCracken	001-1	12/31/2020	Solids, total suspended	00530-1-0	Effluent Gross									< 10	mg/L			mg/L	N
KY0083755	Timberland Subdivision WWTP	McCracken	001-1	12/31/2020	Solids, total suspended	00530-1-0	Effluent Gross											< 10	mg/L	mg/L	N
KY0083755	Timberland Subdivision WWTP	McCracken	001-1	11/30/2020	Solids, total suspended	00530-1-0	Effluent Gross									6	mg/L			mg/L	N
KY0083755	Timberland Subdivision WWTP	McCracken	001-1	11/30/2020	Solids, total suspended	00530-1-0	Effluent Gross											6	mg/L	mg/L	N
KY0083755	Timberland Subdivision WWTP	McCracken	001-1	10/31/2020	Solids, total suspended	00530-1-0	Effluent Gross									16	mg/L			mg/L	N
KY0083755	Timberland Subdivision WWTP	McCracken	001-1	10/31/2020	Solids, total suspended	00530-1-0	Effluent Gross											16	mg/L	mg/L	N
KY0083755	Timberland Subdivision WWTP	McCracken	001-1	09/30/2020	Solids, total suspended	00530-1-0	Effluent Gross									23	mg/L			mg/L	N
KY0083755	Timberland Subdivision WWTP	McCracken	001-1	09/30/2020	Solids, total suspended	00530-1-0	Effluent Gross											36	mg/L	mg/L	N
KY0083755	Timberland Subdivision WWTP	McCracken	001-1	08/31/2020	Solids, total suspended	00530-1-0	Effluent Gross									24	mg/L			mg/L	N
KY0083755	Timberland Subdivision WWTP	McCracken	001-1	08/31/2020	Solids, total suspended	00530-1-0	Effluent Gross											29	mg/L	mg/L	N
KY0083755	Timberland Subdivision WWTP	McCracken	001-1	07/31/2020	Solids, total suspended	00530-1-0	Effluent Gross									18	mg/L			mg/L	N
KY0083755	Timberland Subdivision WWTP	McCracken	001-1	07/31/2020	Solids, total suspended	00530-1-0	Effluent Gross											18	mg/L	mg/L	N
KY0083755	Timberland Subdivision WWTP	McCracken	001-1	06/30/2020	Solids, total suspended	00530-1-0	Effluent Gross									15	mg/L			mg/L	N
KY0083755	Timberland Subdivision WWTP	McCracken	001-1	06/30/2020	Solids, total suspended	00530-1-0	Effluent Gross											15	mg/L	mg/L	N
KY0083755	Timberland Subdivision WWTP	McCracken	001-1	05/31/2020	Solids, total suspended	00530-1-0	Effluent Gross									21	mg/L			mg/L	N
KY0083755	Timberland Subdivision WWTP	McCracken	001-1	05/31/2020	Solids, total suspended	00530-1-0	Effluent Gross											21	mg/L	mg/L	N
KY0083755	Timberland Subdivision WWTP	McCracken	001-1	04/30/2020	Solids, total suspended	00530-1-0	Effluent Gross									9.2	mg/L			mg/L	N
KY0083755	Timberland Subdivision WWTP	McCracken	001-1	04/30/2020	Solids, total suspended	00530-1-0	Effluent Gross											9.2	mg/L	mg/L	N
KY0083755	Timberland Subdivision WWTP	McCracken	001-1	03/31/2020	Solids, total suspended	00530-1-0	Effluent Gross									24.5	mg/L			mg/L	N
KY0083755	Timberland Subdivision WWTP	McCracken	001-1	03/31/2020	Solids, total suspended	00530-1-0	Effluent Gross											24.5	mg/L	mg/L	N
KY0083755	Timberland Subdivision WWTP	McCracken	001-1	02/29/2020	Solids, total suspended	00530-1-0	Effluent Gross									24.5	mg/L			mg/L	N
KY0083755	Timberland Subdivision WWTP	McCracken	001-1	02/29/2020	Solids, total suspended	00530-1-0	Effluent Gross											24.5	mg/L	mg/L	N
KY0083755	Timberland Subdivision WWTP	McCracken	001-1	01/31/2020	Solids, total suspended	00530-1-0	Effluent Gross		3.3	lb/d			lb/d								N
KY0083755	Timberland Subdivision WWTP	McCracken	001-1	01/31/2020	Solids, total suspended	00530-1-0	Effluent Gross				3.3	lb/d	lb/d								N
KY0083755	Timberland Subdivision WWTP	McCracken	001-1	01/31/2020	Solids, total suspended	00530-1-0	Effluent Gross									20	mg/L			mg/L	N
KY0083755	Timberland Subdivision WWTP	McCracken	001-1	01/31/2020	Solids, total suspended	00530-1-0	Effluent Gross											20	mg/L	mg/L	N
KY0083755	Timberland Subdivision WWTP	McCracken	001-1	12/31/2019	Solids, total suspended	00530-1-0	Effluent Gross		.73	lb/d			lb/d								N
KY0083755	Timberland Subdivision WWTP	McCracken	001-1	12/31/2019	Solids, total suspended	00530-1-0	Effluent Gross				.73	lb/d	lb/d								N
KY0083755	Timberland Subdivision WWTP	McCracken	001-1	12/31/2019	Solids, total suspended	00530-1-0	Effluent Gross									4.4	mg/L			mg/L	N
KY0083755	Timberland Subdivision WWTP	McCracken	001-1	12/31/2019	Solids, total suspended	00530-1-0	Effluent Gross											4.4	mg/L	mg/L	N
KY0083755	Timberland Subdivision WWTP	McCracken	001-1	11/30/2019	Solids, total suspended	00530-1-0	Effluent Gross		.78	lb/d			lb/d								N
KY0083755	Timberland Subdivision WWTP	McCracken	001-1	11/30/2019	Solids, total suspended	00530-1-0	Effluent Gross				.78	lb/d	lb/d								N
KY0083755	Timberland Subdivision WWTP	McCracken	001-1	11/30/2019	Solids, total suspended	00530-1-0	Effluent Gross									4.7	mg/L			mg/L	N
KY0083755	Timberland Subdivision WWTP	McCracken	001-1	11/30/2019	Solids, total suspended	00530-1-0	Effluent Gross											4.7	mg/L	mg/L	N
KY0083755	Timberland Subdivision WWTP	McCracken	001-1	10/31/2019	Solids, total suspended	00530-1-0	Effluent Gross		1.21	lb/d			lb/d								N
KY0083755	Timberland Subdivision WWTP	McCracken	001-1	10/31/2019	Solids, total suspended	00530-1-0	Effluent Gross				1.21	lb/d	lb/d								N
KY0083755	Timberland Subdivision WWTP	McCracken	001-1	10/31/2019	Solids, total suspended	00530-1-0	Effluent Gross									14.6	mg/L			mg/L	N
KY0083755	Timberland Subdivision WWTP	McCracken	001-1	10/31/2019	Solids, total suspended	00530-1-0	Effluent Gross											14.6	mg/L	mg/L	N
KY0083755	Timberland Subdivision WWTP	McCracken	001-1	09/30/2019	Solids, total suspended	00530-1-0	Effluent Gross		.69	lb/d			lb/d								N
KY0083755	Timberland Subdivision WWTP	McCracken	001-1	09/30/2019	Solids, total suspended	00530-1-0	Effluent Gross				.69	lb/d	lb/d								N
KY0083755	Timberland Subdivision WWTP	McCracken	001-1	09/30/2019	Solids, total suspended	00530-1-0	Effluent Gross									3.3	mg/L			mg/L	N
KY0083755	Timberland Subdivision WWTP	McCracken	001-1	09/30/2019	Solids, total suspended	00530-1-0	Effluent Gross											3.3	mg/L	mg/L	N
KY0083755	Timberland Subdivision WWTP	McCracken	001-1	08/31/2019	Solids, total suspended	00530-1-0	Effluent Gross		1.6	lb/d			lb/d								N
KY0083755	Timberland Subdivision WWTP	McCracken	001-1	08/31/2019	Solids, total suspended	00530-1-0	Effluent Gross				1.6	lb/d	lb/d								N
KY0083755	Timberland Subdivision WWTP	McCracken	001-1	08/31/2019	Solids, total suspended	00530-1-0	Effluent Gross									7.7	mg/L			mg/L	N
KY0083755	Timberland Subdivision WWTP	McCracken	001-1	08/31/2019	Solids, total suspended	00530-1-0	Effluent Gross											7.7	mg/L	mg/L	N
KY0083755	Timberland Subdivision WWTP	McCracken	001-1	07/31/2019	Solids, total suspended	00530-1-0	Effluent Gross		3.79	lb/d			lb/d								N
KY0083755	Timberland Subdivision WWTP	McCracken	001-1	07/31/2019	Solids, total suspended	00530-1-0	Effluent Gross				3.79	lb/d	lb/d								N
KY0083755	Timberland Subdivision WWTP	McCracken	001-1	07/31/2019	Solids, total suspended	00530-1-0	Effluent Gross									18.2	mg/L			mg/L	N
KY0083755	Timberland Subdivision WWTP	McCracken	001-1	07/31/2019	Solids, total suspended	00530-1-0	Effluent Gross											18.2	mg/L	mg/L	N
KY0083755	Timberland Subdivision WWTP	McCracken	001-1	06/30/2019	Solids, total suspended	00530-1-0	Effluent Gross		.75	lb/d			lb/d								N
KY0083755	Timberland Subdivision WWTP	McCracken	001-1	06/30/2019	Solids, total suspended	00530-1-0	Effluent Gross				.75	lb/d	lb/d								N
KY0083755	Timberland Subdivision WWTP	McCracken	001-1	06/30/2019	Solids, total suspended	00530-1-0	Effluent Gross	49								44.8	mg/L			mg/L	Y
KY0083755	Timberland Subdivision WWTP	McCracken	001-1	06/30/2019	Solids, total suspended	00530-1-0	Effluent Gross											44.8	mg/L	mg/L	N
KY0083755	Timberland Subdivision WWTP	McCracken	001-1	05/31/2019	Solids, total suspended	00530-1-0	Effluent Gross		.22	lb/d			lb/d								N
KY0083755	Timberland Subdivision WWTP	McCracken	001-1	05/31/2019	Solids, total suspended	00530-1-0	Effluent Gross				.22	lb/d	lb/d								N
KY0083755	Timberland Subdivision WWTP	McCracken	001-1	05/31/2019	Solids, total suspended	00530-1-0	Effluent Gross									13.1	mg/L			mg/L	N
KY0083755	Timberland Subdivision WWTP	McCracken	001-1	05/31/2019	Solids, total suspended	00530-1-0	Effluent Gross											13.1	mg/L	mg/L	N
KY0083755	Timberland Subdivision WWTP	McCracken	001-1	04/30/2019	Solids, total suspended	00530-1-0	Effluent Gross		.11	lb/d			lb/d								N
KY0083755	Timberland Subdivision WWTP	McCracken	001-1	04/30/2019	Solids, total suspended	00530-1-0	Effluent Gross				.11	lb/d	lb/d								N
KY0083755	Timberland Subdivision WWTP	McCracken	001-1	04/30/2019	Solids, total suspended	00530-1-0	Effluent Gross									6.4	mg/L			mg/L	N
KY0083755	Timberland Subdivision WWTP	McCracken	001-1	04/30/2019	Solids, total suspended	00530-1-0	Effluent Gross											6.4	mg/L	mg/L	N
KY0083755	Timberland Subdivision WWTP	McCracken	001-1	03/31/2019	Solids, total suspended	00530-1-0	Effluent Gross		.1	lb/d			lb/d								N
KY0083755	Timberland Subdivision WWTP	McCracken	001-1	03/31/2019	Solids, total suspended	00530-1-0	Effluent Gross				.1	lb/d	lb/d								N
KY0083755	Timberland Subdivision WWTP	McCracken	001-1	03/31/2019	Solids, total suspended	00530-1-0	Effluent Gross									6.1	mg/L			mg/L	N
KY0083755	Timberland Subdivision WWTP	McCracken	001-1	03/31/2019	Solids, total suspended	00530-1-0	Effluent Gross											6.1	mg/L	mg/L	N
KY0083755	Timberland Subdivision WWTP	McCracken	001-1	02/28/2019	Solids, total suspended	00530-1-0	Effluent Gross		.098	lb/d			lb/d								N
KY0083755	Timberland Subdivision WWTP	McCracken	001-1	02/28/2019	Solids, total suspended	00530-1-0	Effluent Gross				.098	lb/d	lb/d								N
KY0083755	Timberland Subdivision WWTP	McCracken	001-1	02/28/2019	Solids, total suspended	00530-1-0	Effluent Gross									5.9	mg/L			mg/L	N
KY0083755	Timberland Subdivision WWTP	McCracken	001-1	02/28/2019	Solids, total suspended	00530-1-0	Effluent Gross											5.9	mg/L	mg/L	N
KY0083755	Timberland Subdivision WWTP	McCracken	001-1	01/31/2019	Solids, total suspended	00530-1-0	Effluent Gross		.055	lb/d			lb/d								N
KY0083755	Timberland Subdivision WWTP	McCracken	001-1	01/31/2019	Solids, total suspended	00530-1-0	Effluent Gross				.055	lb/d	lb/d								N
KY0083755	Timberland Subdivision WWTP	McCracken	001-1	01/31/2019	Solids, total suspended	00530-1-0	Effluent Gross									3.3	mg/L			mg/L	N
KY0083755	Timberland Subdivision WWTP	McCracken	001-1	01/31/2019	Solids, total suspended	00530-1-0	Effluent Gross											3.3	mg/L	mg/L	N
KY0083755	Timberland Subdivision WWTP	McCracken	001-1	12/31/2018	Solids, total suspended	00530-1-0	Effluent Gross		.15	lb/d			lb/d								N
KY0083755	Timberland Subdivision WWTP	McCracken	001-1	12/31/2018	Solids, total suspended	00530-1-0	Effluent Gross				.15	lb/d	lb/d								N
KY0083755	Timberland Subdivision WWTP	McCracken	001-1	12/31/2018	Solids, total suspended	00530-1-0	Effluent Gross									9.1	mg/L			mg/L	N
KY0083755	Timberland Subdivision WWTP	McCracken	001-1	12/31/2018	Solids, total suspended	00530-1-0	Effluent Gross											9.1	mg/L	mg/L	N
KY0083755	Timberland Subdivision WWTP	McCracken	001-1	11/30/2018	Solids, total suspended	00530-1-0	Effluent Gross		NODI B		NODI B		lb/d								N

KY0083755	Timberland Subdivision WWTP	McCracken	001-1	11/30/2018	Solids, total suspended	00530-1-0	Effluent Gross									NODI B		NODI B		mg/L	N
KY0083755	Timberland Subdivision WWTP	McCracken	001-1	10/31/2018	Solids, total suspended	00530-1-0	Effluent Gross		.08	lb/d			lb/d								N
KY0083755	Timberland Subdivision WWTP	McCracken	001-1	10/31/2018	Solids, total suspended	00530-1-0	Effluent Gross				.08	lb/d	lb/d								N
KY0083755	Timberland Subdivision WWTP	McCracken	001-1	10/31/2018	Solids, total suspended	00530-1-0	Effluent Gross									4.7	mg/L			mg/L	N
KY0083755	Timberland Subdivision WWTP	McCracken	001-1	10/31/2018	Solids, total suspended	00530-1-0	Effluent Gross											4.7	mg/L	mg/L	N
KY0083755	Timberland Subdivision WWTP	McCracken	001-1	09/30/2018	Solids, total suspended	00530-1-0	Effluent Gross		.11	lb/d			lb/d								N
KY0083755	Timberland Subdivision WWTP	McCracken	001-1	09/30/2018	Solids, total suspended	00530-1-0	Effluent Gross				.11	lb/d	lb/d								N
KY0083755	Timberland Subdivision WWTP	McCracken	001-1	09/30/2018	Solids, total suspended	00530-1-0	Effluent Gross									6.5	mg/L			mg/L	N
KY0083755	Timberland Subdivision WWTP	McCracken	001-1	09/30/2018	Solids, total suspended	00530-1-0	Effluent Gross											6.5	mg/L	mg/L	N
KY0083755	Timberland Subdivision WWTP	McCracken	001-1	08/31/2018	Solids, total suspended	00530-1-0	Effluent Gross		.071	lb/d			lb/d								N
KY0083755	Timberland Subdivision WWTP	McCracken	001-1	08/31/2018	Solids, total suspended	00530-1-0	Effluent Gross				.071	lb/d	lb/d								N
KY0083755	Timberland Subdivision WWTP	McCracken	001-1	08/31/2018	Solids, total suspended	00530-1-0	Effluent Gross									4.3	mg/L			mg/L	N
KY0083755	Timberland Subdivision WWTP	McCracken	001-1	08/31/2018	Solids, total suspended	00530-1-0	Effluent Gross											4.3	mg/L	mg/L	N
KY0083755	Timberland Subdivision WWTP	McCracken	001-1	07/31/2018	Solids, total suspended	00530-1-0	Effluent Gross		.13	lb/d			lb/d								N
KY0083755	Timberland Subdivision WWTP	McCracken	001-1	07/31/2018	Solids, total suspended	00530-1-0	Effluent Gross				.13	lb/d	lb/d								N
KY0083755	Timberland Subdivision WWTP	McCracken	001-1	07/31/2018	Solids, total suspended	00530-1-0	Effluent Gross									7.9	mg/L			mg/L	N
KY0083755	Timberland Subdivision WWTP	McCracken	001-1	07/31/2018	Solids, total suspended	00530-1-0	Effluent Gross											7.9	mg/L	mg/L	N
KY0083755	Timberland Subdivision WWTP	McCracken	001-1	06/30/2018	Solids, total suspended	00530-1-0	Effluent Gross		.138	lb/d			lb/d								N
KY0083755	Timberland Subdivision WWTP	McCracken	001-1	06/30/2018	Solids, total suspended	00530-1-0	Effluent Gross				.138	lb/d	lb/d								N
KY0083755	Timberland Subdivision WWTP	McCracken	001-1	06/30/2018	Solids, total suspended	00530-1-0	Effluent Gross									8.3	mg/L			mg/L	N
KY0083755	Timberland Subdivision WWTP	McCracken	001-1	06/30/2018	Solids, total suspended	00530-1-0	Effluent Gross											8.3	mg/L	mg/L	N
KY0083755	Timberland Subdivision WWTP	McCracken	001-1	05/31/2018	Solids, total suspended	00530-1-0	Effluent Gross		NODI B		NODI B		lb/d								N
KY0083755	Timberland Subdivision WWTP	McCracken	001-1	05/31/2018	Solids, total suspended	00530-1-0	Effluent Gross									NODI B		NODI B		mg/L	N
KY0083755	Timberland Subdivision WWTP	McCracken	001-1	04/30/2018	Solids, total suspended	00530-1-0	Effluent Gross		.076	lb/d			lb/d								N
KY0083755	Timberland Subdivision WWTP	McCracken	001-1	04/30/2018	Solids, total suspended	00530-1-0	Effluent Gross				.076	lb/d	lb/d								N
KY0083755	Timberland Subdivision WWTP	McCracken	001-1	04/30/2018	Solids, total suspended	00530-1-0	Effluent Gross									4.6	mg/L			mg/L	N
KY0083755	Timberland Subdivision WWTP	McCracken	001-1	04/30/2018	Solids, total suspended	00530-1-0	Effluent Gross											4.6	mg/L	mg/L	N
KY0083755	Timberland Subdivision WWTP	McCracken	001-1	03/31/2018	Solids, total suspended	00530-1-0	Effluent Gross		.05	lb/d			lb/d								N
KY0083755	Timberland Subdivision WWTP	McCracken	001-1	03/31/2018	Solids, total suspended	00530-1-0	Effluent Gross				.05	lb/d	lb/d								N
KY0083755	Timberland Subdivision WWTP	McCracken	001-1	03/31/2018	Solids, total suspended	00530-1-0	Effluent Gross									3.1	mg/L			mg/L	N
KY0083755	Timberland Subdivision WWTP	McCracken	001-1	03/31/2018	Solids, total suspended	00530-1-0	Effluent Gross											3.1	mg/L	mg/L	N
KY0083755	Timberland Subdivision WWTP	McCracken	001-1	02/28/2018	Solids, total suspended	00530-1-0	Effluent Gross		.06	lb/d			lb/d								N
KY0083755	Timberland Subdivision WWTP	McCracken	001-1	02/28/2018	Solids, total suspended	00530-1-0	Effluent Gross				.06	lb/d	lb/d								N
KY0083755	Timberland Subdivision WWTP	McCracken	001-1	02/28/2018	Solids, total suspended	00530-1-0	Effluent Gross									3.8	mg/L			mg/L	N
KY0083755	Timberland Subdivision WWTP	McCracken	001-1	02/28/2018	Solids, total suspended	00530-1-0	Effluent Gross											3.8	mg/L	mg/L	N
KY0083755	Timberland Subdivision WWTP	McCracken	001-1	01/31/2018	Solids, total suspended	00530-1-0	Effluent Gross		.09	lb/d			lb/d								N
KY0083755	Timberland Subdivision WWTP	McCracken	001-1	01/31/2018	Solids, total suspended	00530-1-0	Effluent Gross				.09	lb/d	lb/d								N
KY0083755	Timberland Subdivision WWTP	McCracken	001-1	01/31/2018	Solids, total suspended	00530-1-0	Effluent Gross									5.4	mg/L			mg/L	N
KY0083755	Timberland Subdivision WWTP	McCracken	001-1	01/31/2018	Solids, total suspended	00530-1-0	Effluent Gross											5.4	mg/L	mg/L	N
KY0083755	Timberland Subdivision WWTP	McCracken	001-1	12/31/2017	Solids, total suspended	00530-1-0	Effluent Gross		.068	lb/d			lb/d								N
KY0083755	Timberland Subdivision WWTP	McCracken	001-1	12/31/2017	Solids, total suspended	00530-1-0	Effluent Gross				.068	lb/d	lb/d								N
KY0083755	Timberland Subdivision WWTP	McCracken	001-1	12/31/2017	Solids, total suspended	00530-1-0	Effluent Gross									4.1	mg/L			mg/L	N
KY0083755	Timberland Subdivision WWTP	McCracken	001-1	12/31/2017	Solids, total suspended	00530-1-0	Effluent Gross											4.1	mg/L	mg/L	N
KY0083755	Timberland Subdivision WWTP	McCracken	001-1	11/30/2017	Solids, total suspended	00530-1-0	Effluent Gross		.05	lb/d			lb/d								N
KY0083755	Timberland Subdivision WWTP	McCracken	001-1	11/30/2017	Solids, total suspended	00530-1-0	Effluent Gross				.05	lb/d	lb/d								N
KY0083755	Timberland Subdivision WWTP	McCracken	001-1	11/30/2017	Solids, total suspended	00530-1-0	Effluent Gross									3.2	mg/L			mg/L	N
KY0083755	Timberland Subdivision WWTP	McCracken	001-1	11/30/2017	Solids, total suspended	00530-1-0	Effluent Gross											3.2	mg/L	mg/L	N
KY0083755	Timberland Subdivision WWTP	McCracken	001-1	10/31/2017	Solids, total suspended	00530-1-0	Effluent Gross		.12	lb/d			lb/d								N
KY0083755	Timberland Subdivision WWTP	McCracken	001-1	10/31/2017	Solids, total suspended	00530-1-0	Effluent Gross				.12	lb/d	lb/d								N
KY0083755	Timberland Subdivision WWTP	McCracken	001-1	10/31/2017	Solids, total suspended	00530-1-0	Effluent Gross									6.9	mg/L			mg/L	N
KY0083755	Timberland Subdivision WWTP	McCracken	001-1	10/31/2017	Solids, total suspended	00530-1-0	Effluent Gross											6.9	mg/L	mg/L	N
KY0083755	Timberland Subdivision WWTP	McCracken	001-1	09/30/2017	Solids, total suspended	00530-1-0	Effluent Gross		.05	lb/d			lb/d								N
KY0083755	Timberland Subdivision WWTP	McCracken	001-1	09/30/2017	Solids, total suspended	00530-1-0	Effluent Gross				.05	lb/d	lb/d								N
KY0083755	Timberland Subdivision WWTP	McCracken	001-1	09/30/2017	Solids, total suspended	00530-1-0	Effluent Gross									3.3	mg/L			mg/L	N
KY0083755	Timberland Subdivision WWTP	McCracken	001-1	09/30/2017	Solids, total suspended	00530-1-0	Effluent Gross											3.3	mg/L	mg/L	N
KY0083755	Timberland Subdivision WWTP	McCracken	001-1	08/31/2017	Solids, total suspended	00530-1-0	Effluent Gross		.058	lb/d			lb/d								N
KY0083755	Timberland Subdivision WWTP	McCracken	001-1	08/31/2017	Solids, total suspended	00530-1-0	Effluent Gross				.058	lb/d	lb/d								N
KY0083755	Timberland Subdivision WWTP	McCracken	001-1	08/31/2017	Solids, total suspended	00530-1-0	Effluent Gross									3.5	mg/L			mg/L	N
KY0083755	Timberland Subdivision WWTP	McCracken	001-1	08/31/2017	Solids, total suspended	00530-1-0	Effluent Gross											3.5	mg/L	mg/L	N
KY0083755	Timberland Subdivision WWTP	McCracken	001-1	07/31/2017	Solids, total suspended	00530-1-0	Effluent Gross		.066	lb/d			lb/d								N
KY0083755	Timberland Subdivision WWTP	McCracken	001-1	07/31/2017	Solids, total suspended	00530-1-0	Effluent Gross				.066	lb/d	lb/d								N
KY0083755	Timberland Subdivision WWTP	McCracken	001-1	07/31/2017	Solids, total suspended	00530-1-0	Effluent Gross									4	mg/L			mg/L	N
KY0083755	Timberland Subdivision WWTP	McCracken	001-1	07/31/2017	Solids, total suspended	00530-1-0	Effluent Gross											4	mg/L	mg/L	N
KY0083755	Timberland Subdivision WWTP	McCracken	001-1	06/30/2017	Solids, total suspended	00530-1-0	Effluent Gross		.17	lb/d			lb/d								N
KY0083755	Timberland Subdivision WWTP	McCracken	001-1	06/30/2017	Solids, total suspended	00530-1-0	Effluent Gross				.17	lb/d	lb/d								N
KY0083755	Timberland Subdivision WWTP	McCracken	001-1	06/30/2017	Solids, total suspended	00530-1-0	Effluent Gross									10	mg/L			mg/L	N
KY0083755	Timberland Subdivision WWTP	McCracken	001-1	06/30/2017	Solids, total suspended	00530-1-0	Effluent Gross											10	mg/L	mg/L	N
KY0083755	Timberland Subdivision WWTP	McCracken	001-1	05/31/2017	Solids, total suspended	00530-1-0	Effluent Gross		.043	lb/d			lb/d								N
KY0083755	Timberland Subdivision WWTP	McCracken	001-1	05/31/2017	Solids, total suspended	00530-1-0	Effluent Gross				.043	lb/d	lb/d								N
KY0083755	Timberland Subdivision WWTP	McCracken	001-1	05/31/2017	Solids, total suspended	00530-1-0	Effluent Gross									2.6	mg/L			mg/L	N
KY0083755	Timberland Subdivision WWTP	McCracken	001-1	05/31/2017	Solids, total suspended	00530-1-0	Effluent Gross											2.6	mg/L	mg/L	N
KY0083755	Timberland Subdivision WWTP	McCracken	001-1	04/30/2017	Solids, total suspended	00530-1-0	Effluent Gross		.103	lb/d			lb/d								N
KY0083755	Timberland Subdivision WWTP	McCracken	001-1	04/30/2017	Solids, total suspended	00530-1-0	Effluent Gross				.003	lb/d	lb/d								N
KY0083755	Timberland Subdivision WWTP	McCracken	001-1	04/30/2017	Solids, total suspended	00530-1-0	Effluent Gross									6.2	mg/L			mg/L	N
KY0083755	Timberland Subdivision WWTP	McCracken	001-1	04/30/2017	Solids, total suspended	00530-1-0	Effluent Gross											6.2	mg/L	mg/L	N
KY0083755	Timberland Subdivision WWTP	McCracken	001-1	03/31/2017	Solids, total suspended	00530-1-0	Effluent Gross		.004	lb/d			lb/d								N
KY0083755	Timberland Subdivision WWTP	McCracken	001-1	03/31/2017	Solids, total suspended	00530-1-0	Effluent Gross				.004	lb/d	lb/d								N
KY0083755	Timberland Subdivision WWTP	McCracken	001-1	03/31/2017	Solids, total suspended	00530-1-0	Effluent Gross									4.6	mg/L			mg/L	N
KY0083755	Timberland Subdivision WWTP	McCracken	001-1	03/31/2017	Solids, total suspended	00530-1-0	Effluent Gross											4.6	mg/L	mg/L	N
KY0083755	Timberland Subdivision WWTP	McCracken	001-1	02/28/2017	Solids, total suspended	00530-1-0	Effluent Gross		.18	lb/d			lb/d								N
KY0083755	Timberland Subdivision WWTP	McCracken	001-1	02/28/2017	Solids, total suspended	00530-1-0	Effluent Gross				.18	lb/d	lb/d								N
KY0083755	Timberland Subdivision WWTP	McCracken	001-1	02/28/2017	Solids, total suspended	00530-1-0	Effluent Gross									10.6	mg/L			mg/L	N
KY0083755	Timberland Subdivision WWTP	McCracken	001-1	02/28/2017	Solids, total suspended	00530-1-0	Effluent Gross											10.6	mg/L	mg/L	N
KY0083755	Timberland Subdivision WWTP	McCracken	001-1	01/31/2017	Solids, total suspended	00530-1-0	Effluent Gross		.06	lb/d			lb/d								N
KY0083755	Timberland Subdivision WWTP	McCracken	001-1	01/31/2017	Solids, total suspended	00530-1-0	Effluent Gross				.06	lb/d	lb/d								N
KY0083755	Timberland Subdivision WWTP	McCracken	001-1	01/31/2017	Solids, total suspended	00530-1-0	Effluent Gross									3.8	mg/L			mg/L	N
KY0083755	Timberland Subdivision WWTP	McCracken	001-1	01/31/2017	Solids, total suspended	00530-1-0	Effluent Gross											3.8	mg/L	mg/L	N
KY0083755	Timberland Subdivision WWTP	McCracken	001-1	12/31/2016	Solids, total suspended	00530-1-0	Effluent Gross		.06	lb/d			lb/d								N
KY0083755	Timberland Subdivision WWTP	McCracken	001-1	12/31/2016	Solids, total suspended	00530-1-0	Effluent Gross				.06	lb/d	lb/d								N
KY0083755	Timberland Subdivision WWTP	McCracken	001-1	12/31/2016	Solids, total suspended	00530-1-0	Effluent Gross									3.6	mg/L			mg/L	N

KY0083755	Timberland Subdivision WWTP	McCracken	001-1	12/31/2016	Solids, total suspended	00530-1-0	Effluent Gross											3.6	mg/L	mg/L	N
KY0083755	Timberland Subdivision WWTP	McCracken	001-1	11/30/2016	Solids, total suspended	00530-1-0	Effluent Gross		.07	lb/d			lb/d								N
KY0083755	Timberland Subdivision WWTP	McCracken	001-1	11/30/2016	Solids, total suspended	00530-1-0	Effluent Gross				.07	lb/d	lb/d								N
KY0083755	Timberland Subdivision WWTP	McCracken	001-1	11/30/2016	Solids, total suspended	00530-1-0	Effluent Gross										3.9	mg/L			N
KY0083755	Timberland Subdivision WWTP	McCracken	001-1	11/30/2016	Solids, total suspended	00530-1-0	Effluent Gross												3.9	mg/L	N
KY0083755	Timberland Subdivision WWTP	McCracken	001-1	10/31/2016	Solids, total suspended	00530-1-0	Effluent Gross		.13	lb/d			lb/d								N
KY0083755	Timberland Subdivision WWTP	McCracken	001-1	10/31/2016	Solids, total suspended	00530-1-0	Effluent Gross				.13	lb/d	lb/d								N
KY0083755	Timberland Subdivision WWTP	McCracken	001-1	10/31/2016	Solids, total suspended	00530-1-0	Effluent Gross										7.8	mg/L			N
KY0083755	Timberland Subdivision WWTP	McCracken	001-1	10/31/2016	Solids, total suspended	00530-1-0	Effluent Gross												7.8	mg/L	N
KY0083755	Timberland Subdivision WWTP	McCracken	001-1	09/30/2016	Solids, total suspended	00530-1-0	Effluent Gross		.06	lb/d			lb/d								N
KY0083755	Timberland Subdivision WWTP	McCracken	001-1	09/30/2016	Solids, total suspended	00530-1-0	Effluent Gross				.06	lb/d	lb/d								N
KY0083755	Timberland Subdivision WWTP	McCracken	001-1	09/30/2016	Solids, total suspended	00530-1-0	Effluent Gross										3.5	mg/L			N
KY0083755	Timberland Subdivision WWTP	McCracken	001-1	09/30/2016	Solids, total suspended	00530-1-0	Effluent Gross												3.5	mg/L	N
KY0083755	Timberland Subdivision WWTP	McCracken	001-1	08/31/2016	Solids, total suspended	00530-1-0	Effluent Gross		NODI B		NODI B		lb/d								N
KY0083755	Timberland Subdivision WWTP	McCracken	001-1	08/31/2016	Solids, total suspended	00530-1-0	Effluent Gross										NODI B		NODI B		N
KY0083755	Timberland Subdivision WWTP	McCracken	001-1	07/31/2016	Solids, total suspended	00530-1-0	Effluent Gross		.15	lb/d			lb/d								N
KY0083755	Timberland Subdivision WWTP	McCracken	001-1	07/31/2016	Solids, total suspended	00530-1-0	Effluent Gross				.15	lb/d	lb/d								N
KY0083755	Timberland Subdivision WWTP	McCracken	001-1	07/31/2016	Solids, total suspended	00530-1-0	Effluent Gross										8.7	mg/L			N
KY0083755	Timberland Subdivision WWTP	McCracken	001-1	07/31/2016	Solids, total suspended	00530-1-0	Effluent Gross												8.7	mg/L	N
KY0083755	Timberland Subdivision WWTP	McCracken	001-1	06/30/2016	Solids, total suspended	00530-1-0	Effluent Gross		1	lb/d			lb/d								N
KY0083755	Timberland Subdivision WWTP	McCracken	001-1	06/30/2016	Solids, total suspended	00530-1-0	Effluent Gross				1	lb/d	lb/d								N
KY0083755	Timberland Subdivision WWTP	McCracken	001-1	06/30/2016	Solids, total suspended	00530-1-0	Effluent Gross										5.7	mg/L			N
KY0083755	Timberland Subdivision WWTP	McCracken	001-1	06/30/2016	Solids, total suspended	00530-1-0	Effluent Gross												5.7	mg/L	N
KY0083755	Timberland Subdivision WWTP	McCracken	001-1	05/31/2016	Solids, total suspended	00530-1-0	Effluent Gross		.06	lb/d			lb/d								N
KY0083755	Timberland Subdivision WWTP	McCracken	001-1	05/31/2016	Solids, total suspended	00530-1-0	Effluent Gross				.06	lb/d	lb/d								N
KY0083755	Timberland Subdivision WWTP	McCracken	001-1	05/31/2016	Solids, total suspended	00530-1-0	Effluent Gross										3.5	mg/L			N
KY0083755	Timberland Subdivision WWTP	McCracken	001-1	05/31/2016	Solids, total suspended	00530-1-0	Effluent Gross												3.5	mg/L	N
KY0083755	Timberland Subdivision WWTP	McCracken	001-1	04/30/2016	Solids, total suspended	00530-1-0	Effluent Gross		.15	lb/d			lb/d								N
KY0083755	Timberland Subdivision WWTP	McCracken	001-1	04/30/2016	Solids, total suspended	00530-1-0	Effluent Gross				.15	lb/d	lb/d								N
KY0083755	Timberland Subdivision WWTP	McCracken	001-1	04/30/2016	Solids, total suspended	00530-1-0	Effluent Gross										9.1	mg/L			N
KY0083755	Timberland Subdivision WWTP	McCracken	001-1	04/30/2016	Solids, total suspended	00530-1-0	Effluent Gross												9.1	mg/L	N
KY0083755	Timberland Subdivision WWTP	McCracken	001-1	03/31/2016	Solids, total suspended	00530-1-0	Effluent Gross		.08	lb/d			lb/d								N
KY0083755	Timberland Subdivision WWTP	McCracken	001-1	03/31/2016	Solids, total suspended	00530-1-0	Effluent Gross				.08	lb/d	lb/d								N
KY0083755	Timberland Subdivision WWTP	McCracken	001-1	03/31/2016	Solids, total suspended	00530-1-0	Effluent Gross										4.6	mg/L			N
KY0083755	Timberland Subdivision WWTP	McCracken	001-1	03/31/2016	Solids, total suspended	00530-1-0	Effluent Gross												4.6	mg/L	N
KY0083755	Timberland Subdivision WWTP	McCracken	001-1	02/29/2016	Solids, total suspended	00530-1-0	Effluent Gross		.42	lb/d			lb/d								N
KY0083755	Timberland Subdivision WWTP	McCracken	001-1	02/29/2016	Solids, total suspended	00530-1-0	Effluent Gross				.42	lb/d	lb/d								N
KY0083755	Timberland Subdivision WWTP	McCracken	001-1	02/29/2016	Solids, total suspended	00530-1-0	Effluent Gross										25	mg/L			N
KY0083755	Timberland Subdivision WWTP	McCracken	001-1	02/29/2016	Solids, total suspended	00530-1-0	Effluent Gross												25	mg/L	N
KY0083755	Timberland Subdivision WWTP	McCracken	001-1	10/31/2020	Nitrogen, ammonia total [as	00610-1-1	Effluent Gross	145									4.9	mg/L			Y
KY0083755	Timberland Subdivision WWTP	McCracken	001-1	10/31/2020	Nitrogen, ammonia total [as	00610-1-1	Effluent Gross	63											4.9	mg/L	Y
KY0083755	Timberland Subdivision WWTP	McCracken	001-1	09/30/2020	Nitrogen, ammonia total [as	00610-1-1	Effluent Gross	313									8.25	mg/L			Y
KY0083755	Timberland Subdivision WWTP	McCracken	001-1	09/30/2020	Nitrogen, ammonia total [as	00610-1-1	Effluent Gross	193											8.8	mg/L	Y
KY0083755	Timberland Subdivision WWTP	McCracken	001-1	08/31/2020	Nitrogen, ammonia total [as	00610-1-1	Effluent Gross	700									16	mg/L			Y
KY0083755	Timberland Subdivision WWTP	McCracken	001-1	08/31/2020	Nitrogen, ammonia total [as	00610-1-1	Effluent Gross	433											16	mg/L	Y
KY0083755	Timberland Subdivision WWTP	McCracken	001-1	07/31/2020	Nitrogen, ammonia total [as	00610-1-1	Effluent Gross	800									18	mg/L			Y
KY0083755	Timberland Subdivision WWTP	McCracken	001-1	07/31/2020	Nitrogen, ammonia total [as	00610-1-1	Effluent Gross	500											18	mg/L	Y
KY0083755	Timberland Subdivision WWTP	McCracken	001-1	06/30/2020	Nitrogen, ammonia total [as	00610-1-1	Effluent Gross	700									16	mg/L			Y
KY0083755	Timberland Subdivision WWTP	McCracken	001-1	06/30/2020	Nitrogen, ammonia total [as	00610-1-1	Effluent Gross	433											16	mg/L	Y
KY0083755	Timberland Subdivision WWTP	McCracken	001-1	05/31/2020	Nitrogen, ammonia total [as	00610-1-1	Effluent Gross	700									16	mg/L			Y
KY0083755	Timberland Subdivision WWTP	McCracken	001-1	05/31/2020	Nitrogen, ammonia total [as	00610-1-1	Effluent Gross	433											16	mg/L	Y
KY0083755	Timberland Subdivision WWTP	McCracken	001-1	10/31/2019	Nitrogen, ammonia total [as	00610-1-1	Effluent Gross		.138	lb/d			lb/d								N
KY0083755	Timberland Subdivision WWTP	McCracken	001-1	10/31/2019	Nitrogen, ammonia total [as	00610-1-1	Effluent Gross				.138	lb/d	lb/d								N
KY0083755	Timberland Subdivision WWTP	McCracken	001-1	10/31/2019	Nitrogen, ammonia total [as	00610-1-1	Effluent Gross										.83	mg/L			N
KY0083755	Timberland Subdivision WWTP	McCracken	001-1	10/31/2019	Nitrogen, ammonia total [as	00610-1-1	Effluent Gross												.83	mg/L	N
KY0083755	Timberland Subdivision WWTP	McCracken	001-1	09/30/2019	Nitrogen, ammonia total [as	00610-1-1	Effluent Gross	155	1.02	lb/d			lb/d								Y
KY0083755	Timberland Subdivision WWTP	McCracken	001-1	09/30/2019	Nitrogen, ammonia total [as	00610-1-1	Effluent Gross	70			1.02	lb/d	lb/d								Y
KY0083755	Timberland Subdivision WWTP	McCracken	001-1	09/30/2019	Nitrogen, ammonia total [as	00610-1-1	Effluent Gross	147									4.93	mg/L			Y
KY0083755	Timberland Subdivision WWTP	McCracken	001-1	09/30/2019	Nitrogen, ammonia total [as	00610-1-1	Effluent Gross	64											4.93	mg/L	Y
KY0083755	Timberland Subdivision WWTP	McCracken	001-1	08/31/2019	Nitrogen, ammonia total [as	00610-1-1	Effluent Gross		NODI B		NODI B		lb/d								N
KY0083755	Timberland Subdivision WWTP	McCracken	001-1	08/31/2019	Nitrogen, ammonia total [as	00610-1-1	Effluent Gross										NODI B		NODI B		N
KY0083755	Timberland Subdivision WWTP	McCracken	001-1	07/31/2019	Nitrogen, ammonia total [as	00610-1-1	Effluent Gross		.079	lb/d			lb/d								N
KY0083755	Timberland Subdivision WWTP	McCracken	001-1	07/31/2019	Nitrogen, ammonia total [as	00610-1-1	Effluent Gross				.079	lb/d	lb/d								N
KY0083755	Timberland Subdivision WWTP	McCracken	001-1	07/31/2019	Nitrogen, ammonia total [as	00610-1-1	Effluent Gross										.38	mg/L			N
KY0083755	Timberland Subdivision WWTP	McCracken	001-1	07/31/2019	Nitrogen, ammonia total [as	00610-1-1	Effluent Gross												.38	mg/L	N
KY0083755	Timberland Subdivision WWTP	McCracken	001-1	06/30/2019	Nitrogen, ammonia total [as	00610-1-1	Effluent Gross		NODI B		NODI B		lb/d								N
KY0083755	Timberland Subdivision WWTP	McCracken	001-1	06/30/2019	Nitrogen, ammonia total [as	00610-1-1	Effluent Gross										NODI B		NODI B		N
KY0083755	Timberland Subdivision WWTP	McCracken	001-1	05/31/2019	Nitrogen, ammonia total [as	00610-1-1	Effluent Gross		.051	lb/d			lb/d								N
KY0083755	Timberland Subdivision WWTP	McCracken	001-1	05/31/2019	Nitrogen, ammonia total [as	00610-1-1	Effluent Gross				.051	lb/d	lb/d								N
KY0083755	Timberland Subdivision WWTP	McCracken	001-1	05/31/2019	Nitrogen, ammonia total [as	00610-1-1	Effluent Gross	54									3.07	mg/L			Y
KY0083755	Timberland Subdivision WWTP	McCracken	001-1	05/31/2019	Nitrogen, ammonia total [as	00610-1-1	Effluent Gross	2											3.07	mg/L	Y
KY0083755	Timberland Subdivision WWTP	McCracken	001-1	10/31/2018	Nitrogen, ammonia total [as	00610-1-1	Effluent Gross		.11	lb/d			lb/d								N
KY0083755	Timberland Subdivision WWTP	McCracken	001-1	10/31/2018	Nitrogen, ammonia total [as	00610-1-1	Effluent Gross				.11	lb/d	lb/d								N
KY0083755	Timberland Subdivision WWTP	McCracken	001-1	10/31/2018	Nitrogen, ammonia total [as	00610-1-1	Effluent Gross	219									6.38	mg/L			Y
KY0083755	Timberland Subdivision WWTP	McCracken	001-1	10/31/2018	Nitrogen, ammonia total [as	00610-1-1	Effluent Gross	113											6.38	mg/L	Y
KY0083755	Timberland Subdivision WWTP	McCracken	001-1	09/30/2018	Nitrogen, ammonia total [as	00610-1-1	Effluent Gross		.14	lb/d			lb/d								N
KY0083755	Timberland Subdivision WWTP	McCracken	001-1	09/30/2018	Nitrogen, ammonia total [as	00610-1-1	Effluent Gross				.14	lb/d	lb/d								N
KY0083755	Timberland Subdivision WWTP	McCracken	001-1	09/30/2018	Nitrogen, ammonia total [as	00610-1-1	Effluent Gross	332									8.63	mg/L			Y
KY0083755	Timberland Subdivision WWTP	McCracken	001-1	09/30/2018	Nitrogen, ammonia total [as	00610-1-1	Effluent Gross	188											8.63	mg/L	Y
KY0083755	Timberland Subdivision WWTP	McCracken	001-1	08/31/2018	Nitrogen, ammonia total [as	00610-1-1	Effluent Gross		.061	lb/d			lb/d								N
KY0083755	Timberland Subdivision WWTP	McCracken	001-1	08/31/2018	Nitrogen, ammonia total [as	00610-1-1	Effluent Gross				.061	lb/d	lb/d								N
KY0083755	Timberland Subdivision WWTP	McCracken	001-1	08/31/2018	Nitrogen, ammonia total [as	00610-1-1	Effluent Gross	84									3.67	mg/L			Y
KY0083755	Timberland Subdivision WWTP	McCracken	001-1	08/31/2018	Nitrogen, ammonia total [as	00610-1-1	Effluent Gross	22											3.67	mg/L	Y
KY0083755	Timberland Subdivision WWTP	McCracken	001-1	07/31/2018	Nitrogen, ammonia total [as	00610-1-1	Effluent Gross		.041	lb/d			lb/d								N
KY0083755	Timberland Subdivision WWTP	McCracken	001-1	07/31/2018	Nitrogen, ammonia total [as	00610-1-1	Effluent Gross				.041	lb/d	lb/d								N
KY0083755	Timberland Subdivision WWTP	McCracken	001-1	07/31/2018	Nitrogen, ammonia total [as	00610-1-1	Effluent Gross	26									2.51	mg/L			Y
KY0083755	Timberland Subdivision WWTP	McCracken	001-1	07/31/2018	Nitrogen, ammonia total [as	00610-1-1	Effluent Gross												2.51	mg/L	N
KY0083755	Timberland Subdivision WWTP	McCracken	001-1	06/30/2018	Nitrogen, ammonia total [as	00610-1-1	Effluent Gross		.041	lb/d			lb/d								N
KY0083755	Timberland Subdivision WWTP	McCracken	001-1	06/30/2018	Nitrogen, ammonia total [as	00610-1-1	Effluent Gross				.041	lb/d	lb/d								N
KY0083755	Timberland Subdivision WWTP	McCracken	001-1	06/30/2018	Nitrogen, ammonia total [as	00610-1-1	Effluent Gross	24									2.48	mg/L			Y

KY0083755	Timberland Subdivision WWTP	McCracken	001-1	06/30/2018	Nitrogen, ammonia total [as	00610-1-1	Effluent Gross											2.48	mg/L	mg/L	N
KY0083755	Timberland Subdivision WWTP	McCracken	001-1	05/31/2018	Nitrogen, ammonia total [as	00610-1-1	Effluent Gross		.019	lb/d			lb/d									N
KY0083755	Timberland Subdivision WWTP	McCracken	001-1	05/31/2018	Nitrogen, ammonia total [as	00610-1-1	Effluent Gross				.019	lb/d	lb/d									N
KY0083755	Timberland Subdivision WWTP	McCracken	001-1	05/31/2018	Nitrogen, ammonia total [as	00610-1-1	Effluent Gross										1.18	mg/L			mg/L	N
KY0083755	Timberland Subdivision WWTP	McCracken	001-1	05/31/2018	Nitrogen, ammonia total [as	00610-1-1	Effluent Gross												1.18	mg/L	mg/L	N
KY0083755	Timberland Subdivision WWTP	McCracken	001-1	10/31/2017	Nitrogen, ammonia total [as	00610-1-1	Effluent Gross		.033	lb/d			lb/d									N
KY0083755	Timberland Subdivision WWTP	McCracken	001-1	10/31/2017	Nitrogen, ammonia total [as	00610-1-1	Effluent Gross				.033	lb/d	lb/d									N
KY0083755	Timberland Subdivision WWTP	McCracken	001-1	10/31/2017	Nitrogen, ammonia total [as	00610-1-1	Effluent Gross										1.95	mg/L			mg/L	N
KY0083755	Timberland Subdivision WWTP	McCracken	001-1	10/31/2017	Nitrogen, ammonia total [as	00610-1-1	Effluent Gross												1.95	mg/L	mg/L	N
KY0083755	Timberland Subdivision WWTP	McCracken	001-1	09/30/2017	Nitrogen, ammonia total [as	00610-1-1	Effluent Gross		.02	lb/d			lb/d									N
KY0083755	Timberland Subdivision WWTP	McCracken	001-1	09/30/2017	Nitrogen, ammonia total [as	00610-1-1	Effluent Gross				.02	lb/d	lb/d									N
KY0083755	Timberland Subdivision WWTP	McCracken	001-1	09/30/2017	Nitrogen, ammonia total [as	00610-1-1	Effluent Gross										1.43	mg/L			mg/L	N
KY0083755	Timberland Subdivision WWTP	McCracken	001-1	09/30/2017	Nitrogen, ammonia total [as	00610-1-1	Effluent Gross												1.43	mg/L	mg/L	N
KY0083755	Timberland Subdivision WWTP	McCracken	001-1	08/31/2017	Nitrogen, ammonia total [as	00610-1-1	Effluent Gross		.025	lb/d			lb/d									N
KY0083755	Timberland Subdivision WWTP	McCracken	001-1	08/31/2017	Nitrogen, ammonia total [as	00610-1-1	Effluent Gross				.025	lb/d	lb/d									N
KY0083755	Timberland Subdivision WWTP	McCracken	001-1	08/31/2017	Nitrogen, ammonia total [as	00610-1-1	Effluent Gross										1.52	mg/L			mg/L	N
KY0083755	Timberland Subdivision WWTP	McCracken	001-1	08/31/2017	Nitrogen, ammonia total [as	00610-1-1	Effluent Gross												1.52	mg/L	mg/L	N
KY0083755	Timberland Subdivision WWTP	McCracken	001-1	07/31/2017	Nitrogen, ammonia total [as	00610-1-1	Effluent Gross		.027	lb/d			lb/d									N
KY0083755	Timberland Subdivision WWTP	McCracken	001-1	07/31/2017	Nitrogen, ammonia total [as	00610-1-1	Effluent Gross				.027	lb/d	lb/d									N
KY0083755	Timberland Subdivision WWTP	McCracken	001-1	07/31/2017	Nitrogen, ammonia total [as	00610-1-1	Effluent Gross										1.6	mg/L			mg/L	N
KY0083755	Timberland Subdivision WWTP	McCracken	001-1	07/31/2017	Nitrogen, ammonia total [as	00610-1-1	Effluent Gross												1.6	mg/L	mg/L	N
KY0083755	Timberland Subdivision WWTP	McCracken	001-1	06/30/2017	Nitrogen, ammonia total [as	00610-1-1	Effluent Gross		.052	lb/d			lb/d									N
KY0083755	Timberland Subdivision WWTP	McCracken	001-1	06/30/2017	Nitrogen, ammonia total [as	00610-1-1	Effluent Gross				.052	lb/d	lb/d									N
KY0083755	Timberland Subdivision WWTP	McCracken	001-1	06/30/2017	Nitrogen, ammonia total [as	00610-1-1	Effluent Gross	58									3.16	mg/L			mg/L	Y
KY0083755	Timberland Subdivision WWTP	McCracken	001-1	06/30/2017	Nitrogen, ammonia total [as	00610-1-1	Effluent Gross	5											3.16	mg/L	mg/L	Y
KY0083755	Timberland Subdivision WWTP	McCracken	001-1	05/31/2017	Nitrogen, ammonia total [as	00610-1-1	Effluent Gross		.01	lb/d			lb/d									N
KY0083755	Timberland Subdivision WWTP	McCracken	001-1	05/31/2017	Nitrogen, ammonia total [as	00610-1-1	Effluent Gross				.01	lb/d	lb/d									N
KY0083755	Timberland Subdivision WWTP	McCracken	001-1	05/31/2017	Nitrogen, ammonia total [as	00610-1-1	Effluent Gross										.6	mg/L			mg/L	N
KY0083755	Timberland Subdivision WWTP	McCracken	001-1	05/31/2017	Nitrogen, ammonia total [as	00610-1-1	Effluent Gross												.6	mg/L	mg/L	N
KY0083755	Timberland Subdivision WWTP	McCracken	001-1	10/31/2016	Nitrogen, ammonia total [as	00610-1-1	Effluent Gross		.043	lb/d			lb/d									N
KY0083755	Timberland Subdivision WWTP	McCracken	001-1	10/31/2016	Nitrogen, ammonia total [as	00610-1-1	Effluent Gross				.043	lb/d	lb/d									N
KY0083755	Timberland Subdivision WWTP	McCracken	001-1	10/31/2016	Nitrogen, ammonia total [as	00610-1-1	Effluent Gross	30									2.6	mg/L			mg/L	Y
KY0083755	Timberland Subdivision WWTP	McCracken	001-1	10/31/2016	Nitrogen, ammonia total [as	00610-1-1	Effluent Gross												2.6	mg/L	mg/L	N
KY0083755	Timberland Subdivision WWTP	McCracken	001-1	09/30/2016	Nitrogen, ammonia total [as	00610-1-1	Effluent Gross		.06	lb/d			lb/d									N
KY0083755	Timberland Subdivision WWTP	McCracken	001-1	09/30/2016	Nitrogen, ammonia total [as	00610-1-1	Effluent Gross				.06	lb/d	lb/d									N
KY0083755	Timberland Subdivision WWTP	McCracken	001-1	09/30/2016	Nitrogen, ammonia total [as	00610-1-1	Effluent Gross	75									3.5	mg/L			mg/L	Y
KY0083755	Timberland Subdivision WWTP	McCracken	001-1	09/30/2016	Nitrogen, ammonia total [as	00610-1-1	Effluent Gross	17											3.5	mg/L	mg/L	Y
KY0083755	Timberland Subdivision WWTP	McCracken	001-1	08/31/2016	Nitrogen, ammonia total [as	00610-1-1	Effluent Gross		.02	lb/d			lb/d									N
KY0083755	Timberland Subdivision WWTP	McCracken	001-1	08/31/2016	Nitrogen, ammonia total [as	00610-1-1	Effluent Gross				.02	lb/d	lb/d									N
KY0083755	Timberland Subdivision WWTP	McCracken	001-1	08/31/2016	Nitrogen, ammonia total [as	00610-1-1	Effluent Gross										1.06	mg/L			mg/L	N
KY0083755	Timberland Subdivision WWTP	McCracken	001-1	08/31/2016	Nitrogen, ammonia total [as	00610-1-1	Effluent Gross												1.06	mg/L	mg/L	N
KY0083755	Timberland Subdivision WWTP	McCracken	001-1	07/31/2016	Nitrogen, ammonia total [as	00610-1-1	Effluent Gross		.02	lb/d			lb/d									N
KY0083755	Timberland Subdivision WWTP	McCracken	001-1	07/31/2016	Nitrogen, ammonia total [as	00610-1-1	Effluent Gross				.02	lb/d	lb/d									N
KY0083755	Timberland Subdivision WWTP	McCracken	001-1	07/31/2016	Nitrogen, ammonia total [as	00610-1-1	Effluent Gross										1.42	mg/L			mg/L	N
KY0083755	Timberland Subdivision WWTP	McCracken	001-1	07/31/2016	Nitrogen, ammonia total [as	00610-1-1	Effluent Gross												1.42	mg/L	mg/L	N
KY0083755	Timberland Subdivision WWTP	McCracken	001-1	06/30/2016	Nitrogen, ammonia total [as	00610-1-1	Effluent Gross		.03	lb/d			lb/d									N
KY0083755	Timberland Subdivision WWTP	McCracken	001-1	06/30/2016	Nitrogen, ammonia total [as	00610-1-1	Effluent Gross				.03	lb/d	lb/d									N
KY0083755	Timberland Subdivision WWTP	McCracken	001-1	06/30/2016	Nitrogen, ammonia total [as	00610-1-1	Effluent Gross										1.8	mg/L			mg/L	N
KY0083755	Timberland Subdivision WWTP	McCracken	001-1	06/30/2016	Nitrogen, ammonia total [as	00610-1-1	Effluent Gross												1.8	mg/L	mg/L	N
KY0083755	Timberland Subdivision WWTP	McCracken	001-1	05/31/2016	Nitrogen, ammonia total [as	00610-1-1	Effluent Gross		.02	lb/d			lb/d									N
KY0083755	Timberland Subdivision WWTP	McCracken	001-1	05/31/2016	Nitrogen, ammonia total [as	00610-1-1	Effluent Gross				.02	lb/d	lb/d									N
KY0083755	Timberland Subdivision WWTP	McCracken	001-1	05/31/2016	Nitrogen, ammonia total [as	00610-1-1	Effluent Gross										1.02	mg/L			mg/L	N
KY0083755	Timberland Subdivision WWTP	McCracken	001-1	05/31/2016	Nitrogen, ammonia total [as	00610-1-1	Effluent Gross												1.02	mg/L	mg/L	N
KY0083755	Timberland Subdivision WWTP	McCracken	001-1	02/28/2021	Nitrogen, ammonia total [as	00610-1-2	Effluent Gross										2.5	mg/L			mg/L	N
KY0083755	Timberland Subdivision WWTP	McCracken	001-1	02/28/2021	Nitrogen, ammonia total [as	00610-1-2	Effluent Gross												2.5	mg/L	mg/L	N
KY0083755	Timberland Subdivision WWTP	McCracken	001-1	01/31/2021	Nitrogen, ammonia total [as	00610-1-2	Effluent Gross										4	mg/L			mg/L	N
KY0083755	Timberland Subdivision WWTP	McCracken	001-1	01/31/2021	Nitrogen, ammonia total [as	00610-1-2	Effluent Gross												4	mg/L	mg/L	N
KY0083755	Timberland Subdivision WWTP	McCracken	001-1	12/31/2020	Nitrogen, ammonia total [as	00610-1-2	Effluent Gross										4.5	mg/L			mg/L	N
KY0083755	Timberland Subdivision WWTP	McCracken	001-1	12/31/2020	Nitrogen, ammonia total [as	00610-1-2	Effluent Gross												4.5	mg/L	mg/L	N
KY0083755	Timberland Subdivision WWTP	McCracken	001-1	11/30/2020	Nitrogen, ammonia total [as	00610-1-2	Effluent Gross										4.1	mg/L			mg/L	N
KY0083755	Timberland Subdivision WWTP	McCracken	001-1	11/30/2020	Nitrogen, ammonia total [as	00610-1-2	Effluent Gross												4.1	mg/L	mg/L	N
KY0083755	Timberland Subdivision WWTP	McCracken	001-1	04/30/2020	Nitrogen, ammonia total [as	00610-1-2	Effluent Gross										NODI B		NODI B		mg/L	N
KY0083755	Timberland Subdivision WWTP	McCracken	001-1	03/31/2020	Nitrogen, ammonia total [as	00610-1-2	Effluent Gross										NODI B		NODI B		mg/L	N
KY0083755	Timberland Subdivision WWTP	McCracken	001-1	02/29/2020	Nitrogen, ammonia total [as	00610-1-2	Effluent Gross										NODI B		NODI B		mg/L	N
KY0083755	Timberland Subdivision WWTP	McCracken	001-1	01/31/2020	Nitrogen, ammonia total [as	00610-1-2	Effluent Gross		NODI B		NODI B		lb/d									N
KY0083755	Timberland Subdivision WWTP	McCracken	001-1	01/31/2020	Nitrogen, ammonia total [as	00610-1-2	Effluent Gross										NODI B		NODI B		mg/L	N
KY0083755	Timberland Subdivision WWTP	McCracken	001-1	12/31/2019	Nitrogen, ammonia total [as	00610-1-2	Effluent Gross		NODI B		NODI B		lb/d									N
KY0083755	Timberland Subdivision WWTP	McCracken	001-1	12/31/2019	Nitrogen, ammonia total [as	00610-1-2	Effluent Gross										NODI B		NODI B		mg/L	N
KY0083755	Timberland Subdivision WWTP	McCracken	001-1	11/30/2019	Nitrogen, ammonia total [as	00610-1-2	Effluent Gross		.06	lb/d			lb/d									N
KY0083755	Timberland Subdivision WWTP	McCracken	001-1	11/30/2019	Nitrogen, ammonia total [as	00610-1-2	Effluent Gross				.06	lb/d	lb/d									N
KY0083755	Timberland Subdivision WWTP	McCracken	001-1	11/30/2019	Nitrogen, ammonia total [as	00610-1-2	Effluent Gross										.34	mg/L			mg/L	N
KY0083755	Timberland Subdivision WWTP	McCracken	001-1	11/30/2019	Nitrogen, ammonia total [as	00610-1-2	Effluent Gross												.34	mg/L	mg/L	N
KY0083755	Timberland Subdivision WWTP	McCracken	001-1	04/30/2019	Nitrogen, ammonia total [as	00610-1-2	Effluent Gross		.041	lb/d			lb/d									N
KY0083755	Timberland Subdivision WWTP	McCracken	001-1	04/30/2019	Nitrogen, ammonia total [as	00610-1-2	Effluent Gross				.041	lb/d	lb/d									N
KY0083755	Timberland Subdivision WWTP	McCracken	001-1	04/30/2019	Nitrogen, ammonia total [as	00610-1-2	Effluent Gross										2.47	mg/L			mg/L	N
KY0083755	Timberland Subdivision WWTP	McCracken	001-1	04/30/2019	Nitrogen, ammonia total [as	00610-1-2	Effluent Gross												2.47	mg/L	mg/L	N
KY0083755	Timberland Subdivision WWTP	McCracken	001-1	03/31/2019	Nitrogen, ammonia total [as	00610-1-2	Effluent Gross		.01	lb/d			lb/d									N
KY0083755	Timberland Subdivision WWTP	McCracken	001-1	03/31/2019	Nitrogen, ammonia total [as	00610-1-2	Effluent Gross				.01	lb/d	lb/d									N
KY0083755	Timberland Subdivision WWTP	McCracken	001-1	03/31/2019	Nitrogen, ammonia total [as	00610-1-2	Effluent Gross										.62	mg/L			mg/L	N
KY0083755	Timberland Subdivision WWTP	McCracken	001-1	03/31/2019	Nitrogen, ammonia total [as	00610-1-2	Effluent Gross												.62	mg/L	mg/L	N
KY0083755	Timberland Subdivision WWTP	McCracken	001-1	02/28/2019	Nitrogen, ammonia total [as	00610-1-2	Effluent Gross		.0166	lb/d			lb/d									N
KY0083755	Timberland Subdivision WWTP	McCracken	001-1	02/28/2019	Nitrogen, ammonia total [as	00610-1-2	Effluent Gross				.0166	lb/d	lb/d									N
KY0083755	Timberland Subdivision WWTP	McCracken	001-1	02/28/2019	Nitrogen, ammonia total [as	00610-1-2	Effluent Gross										1	mg/L			mg/L	N
KY0083755	Timberland Subdivision WWTP	McCracken	001-1	02/28/2019	Nitrogen, ammonia total [as	00610-1-2	Effluent Gross												1	mg/L	mg/L	N
KY0083755	Timberland Subdivision WWTP	McCracken	001-1	01/31/2019	Nitrogen, ammonia total [as	00610-1-2	Effluent Gross		.11	lb/d			lb/d									N
KY0083755	Timberland Subdivision WWTP	McCracken	001-1	01/31/2019	Nitrogen, ammonia total [as	00610-1-2	Effluent Gross				.11	lb/d	lb/d									N
KY0083755	Timberland Subdivision WWTP	McCracken	001-1	01/31/2019	Nitrogen, ammonia total [as	00610-1-2	Effluent Gross										6.71	mg/L			mg/L	N
KY0083755	Timberland Subdivision WWTP	McCracken	001-1	01/31/2019	Nitrogen, ammonia total [as	00610-1-2	Effluent Gross												6.71	mg/L	mg/L	N
KY0083755	Timberland Subdivision WWTP	McCracken	001-1	12/31/2018	Nitrogen, ammonia total [as	00610-1-2	Effluent Gross		.119	lb/d			lb/d									N
KY0083755	Timberland Subdivision WWTP	McCracken	001-1	12/31/2018	Nitrogen, ammonia total [as	00610-1-2	Effluent Gross				.119	lb/d	lb/d									N

KY0083755	Timberland Subdivision WWTP	McCracken	001-1	12/31/2018	Nitrogen, ammonia total [as	00610-1-2	Effluent Gross									7.17	mg/L			mg/L	N
KY0083755	Timberland Subdivision WWTP	McCracken	001-1	12/31/2018	Nitrogen, ammonia total [as	00610-1-2	Effluent Gross											7.17	mg/L	mg/L	N
KY0083755	Timberland Subdivision WWTP	McCracken	001-1	11/30/2018	Nitrogen, ammonia total [as	00610-1-2	Effluent Gross		.05	lb/d			lb/d								N
KY0083755	Timberland Subdivision WWTP	McCracken	001-1	11/30/2018	Nitrogen, ammonia total [as	00610-1-2	Effluent Gross				.05	lb/d	lb/d								N
KY0083755	Timberland Subdivision WWTP	McCracken	001-1	11/30/2018	Nitrogen, ammonia total [as	00610-1-2	Effluent Gross									3.12	mg/L			mg/L	N
KY0083755	Timberland Subdivision WWTP	McCracken	001-1	11/30/2018	Nitrogen, ammonia total [as	00610-1-2	Effluent Gross											3.12	mg/L	mg/L	N
KY0083755	Timberland Subdivision WWTP	McCracken	001-1	04/30/2018	Nitrogen, ammonia total [as	00610-1-2	Effluent Gross		.011	lb/d			lb/d								N
KY0083755	Timberland Subdivision WWTP	McCracken	001-1	04/30/2018	Nitrogen, ammonia total [as	00610-1-2	Effluent Gross				.011	lb/d	lb/d								N
KY0083755	Timberland Subdivision WWTP	McCracken	001-1	04/30/2018	Nitrogen, ammonia total [as	00610-1-2	Effluent Gross									.69	mg/L			mg/L	N
KY0083755	Timberland Subdivision WWTP	McCracken	001-1	04/30/2018	Nitrogen, ammonia total [as	00610-1-2	Effluent Gross											.69	mg/L	mg/L	N
KY0083755	Timberland Subdivision WWTP	McCracken	001-1	03/31/2018	Nitrogen, ammonia total [as	00610-1-2	Effluent Gross		.009	lb/d			lb/d								N
KY0083755	Timberland Subdivision WWTP	McCracken	001-1	03/31/2018	Nitrogen, ammonia total [as	00610-1-2	Effluent Gross				.009	lb/d	lb/d								N
KY0083755	Timberland Subdivision WWTP	McCracken	001-1	03/31/2018	Nitrogen, ammonia total [as	00610-1-2	Effluent Gross									.52	mg/L			mg/L	N
KY0083755	Timberland Subdivision WWTP	McCracken	001-1	03/31/2018	Nitrogen, ammonia total [as	00610-1-2	Effluent Gross											.52	mg/L	mg/L	N
KY0083755	Timberland Subdivision WWTP	McCracken	001-1	02/28/2018	Nitrogen, ammonia total [as	00610-1-2	Effluent Gross		.005	lb/d			lb/d								N
KY0083755	Timberland Subdivision WWTP	McCracken	001-1	02/28/2018	Nitrogen, ammonia total [as	00610-1-2	Effluent Gross				.005	lb/d	lb/d								N
KY0083755	Timberland Subdivision WWTP	McCracken	001-1	02/28/2018	Nitrogen, ammonia total [as	00610-1-2	Effluent Gross									.34	mg/L			mg/L	N
KY0083755	Timberland Subdivision WWTP	McCracken	001-1	02/28/2018	Nitrogen, ammonia total [as	00610-1-2	Effluent Gross											.34	mg/L	mg/L	N
KY0083755	Timberland Subdivision WWTP	McCracken	001-1	01/31/2018	Nitrogen, ammonia total [as	00610-1-2	Effluent Gross		.01	lb/d			lb/d								N
KY0083755	Timberland Subdivision WWTP	McCracken	001-1	01/31/2018	Nitrogen, ammonia total [as	00610-1-2	Effluent Gross				.01	lb/d	lb/d								N
KY0083755	Timberland Subdivision WWTP	McCracken	001-1	01/31/2018	Nitrogen, ammonia total [as	00610-1-2	Effluent Gross									.6	mg/L			mg/L	N
KY0083755	Timberland Subdivision WWTP	McCracken	001-1	01/31/2018	Nitrogen, ammonia total [as	00610-1-2	Effluent Gross											.6	mg/L	mg/L	N
KY0083755	Timberland Subdivision WWTP	McCracken	001-1	12/31/2017	Nitrogen, ammonia total [as	00610-1-2	Effluent Gross		.005	lb/d			lb/d								N
KY0083755	Timberland Subdivision WWTP	McCracken	001-1	12/31/2017	Nitrogen, ammonia total [as	00610-1-2	Effluent Gross				.005	lb/d	lb/d								N
KY0083755	Timberland Subdivision WWTP	McCracken	001-1	12/31/2017	Nitrogen, ammonia total [as	00610-1-2	Effluent Gross									.3	mg/L			mg/L	N
KY0083755	Timberland Subdivision WWTP	McCracken	001-1	12/31/2017	Nitrogen, ammonia total [as	00610-1-2	Effluent Gross											.3	mg/L	mg/L	N
KY0083755	Timberland Subdivision WWTP	McCracken	001-1	11/30/2017	Nitrogen, ammonia total [as	00610-1-2	Effluent Gross		.03	lb/d			lb/d								N
KY0083755	Timberland Subdivision WWTP	McCracken	001-1	11/30/2017	Nitrogen, ammonia total [as	00610-1-2	Effluent Gross				.03	lb/d	lb/d								N
KY0083755	Timberland Subdivision WWTP	McCracken	001-1	11/30/2017	Nitrogen, ammonia total [as	00610-1-2	Effluent Gross									1.72	mg/L			mg/L	N
KY0083755	Timberland Subdivision WWTP	McCracken	001-1	11/30/2017	Nitrogen, ammonia total [as	00610-1-2	Effluent Gross											1.72	mg/L	mg/L	N
KY0083755	Timberland Subdivision WWTP	McCracken	001-1	04/30/2017	Nitrogen, ammonia total [as	00610-1-2	Effluent Gross		.05	lb/d			lb/d								N
KY0083755	Timberland Subdivision WWTP	McCracken	001-1	04/30/2017	Nitrogen, ammonia total [as	00610-1-2	Effluent Gross				.05	lb/d	lb/d								N
KY0083755	Timberland Subdivision WWTP	McCracken	001-1	04/30/2017	Nitrogen, ammonia total [as	00610-1-2	Effluent Gross									3.2	mg/L			mg/L	N
KY0083755	Timberland Subdivision WWTP	McCracken	001-1	04/30/2017	Nitrogen, ammonia total [as	00610-1-2	Effluent Gross											3.2	mg/L	mg/L	N
KY0083755	Timberland Subdivision WWTP	McCracken	001-1	03/31/2017	Nitrogen, ammonia total [as	00610-1-2	Effluent Gross		.0007	lb/d			lb/d								N
KY0083755	Timberland Subdivision WWTP	McCracken	001-1	03/31/2017	Nitrogen, ammonia total [as	00610-1-2	Effluent Gross				.0007	lb/d	lb/d								N
KY0083755	Timberland Subdivision WWTP	McCracken	001-1	03/31/2017	Nitrogen, ammonia total [as	00610-1-2	Effluent Gross									.84	mg/L			mg/L	N
KY0083755	Timberland Subdivision WWTP	McCracken	001-1	03/31/2017	Nitrogen, ammonia total [as	00610-1-2	Effluent Gross											.84	mg/L	mg/L	N
KY0083755	Timberland Subdivision WWTP	McCracken	001-1	02/28/2017	Nitrogen, ammonia total [as	00610-1-2	Effluent Gross		.009	lb/d			lb/d								N
KY0083755	Timberland Subdivision WWTP	McCracken	001-1	02/28/2017	Nitrogen, ammonia total [as	00610-1-2	Effluent Gross				.009	lb/d	lb/d								N
KY0083755	Timberland Subdivision WWTP	McCracken	001-1	02/28/2017	Nitrogen, ammonia total [as	00610-1-2	Effluent Gross									.59	mg/L			mg/L	N
KY0083755	Timberland Subdivision WWTP	McCracken	001-1	02/28/2017	Nitrogen, ammonia total [as	00610-1-2	Effluent Gross											.59	mg/L	mg/L	N
KY0083755	Timberland Subdivision WWTP	McCracken	001-1	01/31/2017	Nitrogen, ammonia total [as	00610-1-2	Effluent Gross		.01	lb/d			lb/d								N
KY0083755	Timberland Subdivision WWTP	McCracken	001-1	01/31/2017	Nitrogen, ammonia total [as	00610-1-2	Effluent Gross				.01	lb/d	lb/d								N
KY0083755	Timberland Subdivision WWTP	McCracken	001-1	01/31/2017	Nitrogen, ammonia total [as	00610-1-2	Effluent Gross									.66	mg/L			mg/L	N
KY0083755	Timberland Subdivision WWTP	McCracken	001-1	12/31/2016	Nitrogen, ammonia total [as	00610-1-2	Effluent Gross		.016	lb/d			lb/d								N
KY0083755	Timberland Subdivision WWTP	McCracken	001-1	12/31/2016	Nitrogen, ammonia total [as	00610-1-2	Effluent Gross				.016	lb/d	lb/d								N
KY0083755	Timberland Subdivision WWTP	McCracken	001-1	12/31/2016	Nitrogen, ammonia total [as	00610-1-2	Effluent Gross									1	mg/L			mg/L	N
KY0083755	Timberland Subdivision WWTP	McCracken	001-1	12/31/2016	Nitrogen, ammonia total [as	00610-1-2	Effluent Gross											1	mg/L	mg/L	N
KY0083755	Timberland Subdivision WWTP	McCracken	001-1	11/30/2016	Nitrogen, ammonia total [as	00610-1-2	Effluent Gross		.05	lb/d			lb/d								N
KY0083755	Timberland Subdivision WWTP	McCracken	001-1	11/30/2016	Nitrogen, ammonia total [as	00610-1-2	Effluent Gross				.05	lb/d	lb/d								N
KY0083755	Timberland Subdivision WWTP	McCracken	001-1	11/30/2016	Nitrogen, ammonia total [as	00610-1-2	Effluent Gross									3	mg/L			mg/L	N
KY0083755	Timberland Subdivision WWTP	McCracken	001-1	11/30/2016	Nitrogen, ammonia total [as	00610-1-2	Effluent Gross											3	mg/L	mg/L	N
KY0083755	Timberland Subdivision WWTP	McCracken	001-1	04/30/2016	Nitrogen, ammonia total [as	00610-1-2	Effluent Gross		.007	lb/d			lb/d								N
KY0083755	Timberland Subdivision WWTP	McCracken	001-1	04/30/2016	Nitrogen, ammonia total [as	00610-1-2	Effluent Gross				.007	lb/d	lb/d								N
KY0083755	Timberland Subdivision WWTP	McCracken	001-1	04/30/2016	Nitrogen, ammonia total [as	00610-1-2	Effluent Gross									.42	mg/L			mg/L	N
KY0083755	Timberland Subdivision WWTP	McCracken	001-1	04/30/2016	Nitrogen, ammonia total [as	00610-1-2	Effluent Gross											.42	mg/L	mg/L	N
KY0083755	Timberland Subdivision WWTP	McCracken	001-1	03/31/2016	Nitrogen, ammonia total [as	00610-1-2	Effluent Gross		.008	lb/d			lb/d								N
KY0083755	Timberland Subdivision WWTP	McCracken	001-1	03/31/2016	Nitrogen, ammonia total [as	00610-1-2	Effluent Gross				.008	lb/d	lb/d								N
KY0083755	Timberland Subdivision WWTP	McCracken	001-1	03/31/2016	Nitrogen, ammonia total [as	00610-1-2	Effluent Gross									.46	mg/L			mg/L	N
KY0083755	Timberland Subdivision WWTP	McCracken	001-1	03/31/2016	Nitrogen, ammonia total [as	00610-1-2	Effluent Gross											.46	mg/L	mg/L	N
KY0083755	Timberland Subdivision WWTP	McCracken	001-1	02/29/2016	Nitrogen, ammonia total [as	00610-1-2	Effluent Gross		.013	lb/d			lb/d								N
KY0083755	Timberland Subdivision WWTP	McCracken	001-1	02/29/2016	Nitrogen, ammonia total [as	00610-1-2	Effluent Gross				.013	lb/d	lb/d								N
KY0083755	Timberland Subdivision WWTP	McCracken	001-1	02/29/2016	Nitrogen, ammonia total [as	00610-1-2	Effluent Gross									.76	mg/L			mg/L	N
KY0083755	Timberland Subdivision WWTP	McCracken	001-1	02/29/2016	Nitrogen, ammonia total [as	00610-1-2	Effluent Gross											.76	mg/L	mg/L	N
KY0083755	Timberland Subdivision WWTP	McCracken	001-1	02/28/2021	Flow, in conduit or thru	50050-1-0	Effluent Gross		.025	MGD			MGD								N
KY0083755	Timberland Subdivision WWTP	McCracken	001-1	02/28/2021	Flow, in conduit or thru	50050-1-0	Effluent Gross				.025	MGD	MGD								N
KY0083755	Timberland Subdivision WWTP	McCracken	001-1	01/31/2021	Flow, in conduit or thru	50050-1-0	Effluent Gross		.025	MGD			MGD								N
KY0083755	Timberland Subdivision WWTP	McCracken	001-1	01/31/2021	Flow, in conduit or thru	50050-1-0	Effluent Gross				.025	MGD	MGD								N
KY0083755	Timberland Subdivision WWTP	McCracken	001-1	12/31/2020	Flow, in conduit or thru	50050-1-0	Effluent Gross		.025	MGD			MGD								N
KY0083755	Timberland Subdivision WWTP	McCracken	001-1	12/31/2020	Flow, in conduit or thru	50050-1-0	Effluent Gross				.025	MGD	MGD								N
KY0083755	Timberland Subdivision WWTP	McCracken	001-1	11/30/2020	Flow, in conduit or thru	50050-1-0	Effluent Gross		.025	MGD			MGD								N
KY0083755	Timberland Subdivision WWTP	McCracken	001-1	11/30/2020	Flow, in conduit or thru	50050-1-0	Effluent Gross				.025	MGD	MGD								N
KY0083755	Timberland Subdivision WWTP	McCracken	001-1	10/31/2020	Flow, in conduit or thru	50050-1-0	Effluent Gross		.025	MGD			MGD								N
KY0083755	Timberland Subdivision WWTP	McCracken	001-1	10/31/2020	Flow, in conduit or thru	50050-1-0	Effluent Gross				.025	MGD	MGD								N
KY0083755	Timberland Subdivision WWTP	McCracken	001-1	09/30/2020	Flow, in conduit or thru	50050-1-0	Effluent Gross		.025	MGD			MGD								N
KY0083755	Timberland Subdivision WWTP	McCracken	001-1	09/30/2020	Flow, in conduit or thru	50050-1-0	Effluent Gross				.025	MGD	MGD								N
KY0083755	Timberland Subdivision WWTP	McCracken	001-1	08/31/2020	Flow, in conduit or thru	50050-1-0	Effluent Gross		.025	MGD			MGD								N
KY0083755	Timberland Subdivision WWTP	McCracken	001-1	08/31/2020	Flow, in conduit or thru	50050-1-0	Effluent Gross				.025	MGD	MGD								N
KY0083755	Timberland Subdivision WWTP	McCracken	001-1	07/31/2020	Flow, in conduit or thru	50050-1-0	Effluent Gross		.025	MGD			MGD								N
KY0083755	Timberland Subdivision WWTP	McCracken	001-1	07/31/2020	Flow, in conduit or thru	50050-1-0	Effluent Gross				.025	MGD	MGD								N
KY0083755	Timberland Subdivision WWTP	McCracken	001-1	06/30/2020	Flow, in conduit or thru	50050-1-0	Effluent Gross		.025	MGD			MGD								N
KY0083755	Timberland Subdivision WWTP	McCracken	001-1	06/30/2020	Flow, in conduit or thru	50050-1-0	Effluent Gross				.025	MGD	MGD								N
KY0083755	Timberland Subdivision WWTP	McCracken	001-1	05/31/2020	Flow, in conduit or thru	50050-1-0	Effluent Gross		.025	MGD			MGD								N
KY0083755	Timberland Subdivision WWTP	McCracken	001-1	05/31/2020	Flow, in conduit or thru	50050-1-0	Effluent Gross				.025	MGD	MGD								N
KY0083755	Timberland Subdivision WWTP	McCracken	001-1	04/30/2020	Flow, in conduit or thru	50050-1-0	Effluent Gross		.025	MGD			MGD								N
KY0083755	Timberland Subdivision WWTP	McCracken	001-1	04/30/2020	Flow, in conduit or thru	50050-1-0	Effluent Gross				.025	MGD	MGD								N
KY0083755	Timberland Subdivision WWTP	McCracken	001-1	03/31/2020	Flow, in conduit or thru	50050-1-0	Effluent Gross		.002	MGD			MGD								N
KY0083755	Timberland Subdivision WWTP	McCracken	001-1	03/31/2020	Flow, in conduit or thru	50050-1-0	Effluent Gross				.002	MGD	MGD								N

KY0083755	Timberland Subdivision WWTP	McCracken	001-1	02/29/2020	Flow, in conduit or thru	50050-1-0	Effluent Gross		.02	MGD			MGD							N
KY0083755	Timberland Subdivision WWTP	McCracken	001-1	02/29/2020	Flow, in conduit or thru	50050-1-0	Effluent Gross				.02	MGD	MGD							N
KY0083755	Timberland Subdivision WWTP	McCracken	001-1	01/31/2020	Flow, in conduit or thru	50050-1-0	Effluent Gross		.02	MGD			MGD							N
KY0083755	Timberland Subdivision WWTP	McCracken	001-1	01/31/2020	Flow, in conduit or thru	50050-1-0	Effluent Gross				.02	MGD	MGD							N
KY0083755	Timberland Subdivision WWTP	McCracken	001-1	12/31/2019	Flow, in conduit or thru	50050-1-0	Effluent Gross		NODI B		NODI B		MGD							N
KY0083755	Timberland Subdivision WWTP	McCracken	001-1	11/30/2019	Flow, in conduit or thru	50050-1-0	Effluent Gross		.02	MGD			MGD							N
KY0083755	Timberland Subdivision WWTP	McCracken	001-1	11/30/2019	Flow, in conduit or thru	50050-1-0	Effluent Gross				.02	MGD	MGD							N
KY0083755	Timberland Subdivision WWTP	McCracken	001-1	10/31/2019	Flow, in conduit or thru	50050-1-0	Effluent Gross		.02	MGD			MGD							N
KY0083755	Timberland Subdivision WWTP	McCracken	001-1	10/31/2019	Flow, in conduit or thru	50050-1-0	Effluent Gross				.02	MGD	MGD							N
KY0083755	Timberland Subdivision WWTP	McCracken	001-1	09/30/2019	Flow, in conduit or thru	50050-1-0	Effluent Gross		.025	MGD			MGD							N
KY0083755	Timberland Subdivision WWTP	McCracken	001-1	09/30/2019	Flow, in conduit or thru	50050-1-0	Effluent Gross				.025	MGD	MGD							N
KY0083755	Timberland Subdivision WWTP	McCracken	001-1	08/31/2019	Flow, in conduit or thru	50050-1-0	Effluent Gross		.025	MGD			MGD							N
KY0083755	Timberland Subdivision WWTP	McCracken	001-1	08/31/2019	Flow, in conduit or thru	50050-1-0	Effluent Gross				.025	MGD	MGD							N
KY0083755	Timberland Subdivision WWTP	McCracken	001-1	07/31/2019	Flow, in conduit or thru	50050-1-0	Effluent Gross		.025	MGD			MGD							N
KY0083755	Timberland Subdivision WWTP	McCracken	001-1	07/31/2019	Flow, in conduit or thru	50050-1-0	Effluent Gross				.025	MGD	MGD							N
KY0083755	Timberland Subdivision WWTP	McCracken	001-1	06/30/2019	Flow, in conduit or thru	50050-1-0	Effluent Gross		.002	MGD			MGD							N
KY0083755	Timberland Subdivision WWTP	McCracken	001-1	06/30/2019	Flow, in conduit or thru	50050-1-0	Effluent Gross				.002	MGD	MGD							N
KY0083755	Timberland Subdivision WWTP	McCracken	001-1	05/31/2019	Flow, in conduit or thru	50050-1-0	Effluent Gross		.002	MGD			MGD							N
KY0083755	Timberland Subdivision WWTP	McCracken	001-1	05/31/2019	Flow, in conduit or thru	50050-1-0	Effluent Gross				.002	MGD	MGD							N
KY0083755	Timberland Subdivision WWTP	McCracken	001-1	04/30/2019	Flow, in conduit or thru	50050-1-0	Effluent Gross		.002	MGD			MGD							N
KY0083755	Timberland Subdivision WWTP	McCracken	001-1	04/30/2019	Flow, in conduit or thru	50050-1-0	Effluent Gross				.002	MGD	MGD							N
KY0083755	Timberland Subdivision WWTP	McCracken	001-1	03/31/2019	Flow, in conduit or thru	50050-1-0	Effluent Gross		.002	MGD			MGD							N
KY0083755	Timberland Subdivision WWTP	McCracken	001-1	03/31/2019	Flow, in conduit or thru	50050-1-0	Effluent Gross				.002	MGD	MGD							N
KY0083755	Timberland Subdivision WWTP	McCracken	001-1	02/28/2019	Flow, in conduit or thru	50050-1-0	Effluent Gross		.002	MGD			MGD							N
KY0083755	Timberland Subdivision WWTP	McCracken	001-1	02/28/2019	Flow, in conduit or thru	50050-1-0	Effluent Gross				.002	MGD	MGD							N
KY0083755	Timberland Subdivision WWTP	McCracken	001-1	01/31/2019	Flow, in conduit or thru	50050-1-0	Effluent Gross		.002	MGD			MGD							N
KY0083755	Timberland Subdivision WWTP	McCracken	001-1	01/31/2019	Flow, in conduit or thru	50050-1-0	Effluent Gross				.002	MGD	MGD							N
KY0083755	Timberland Subdivision WWTP	McCracken	001-1	12/31/2018	Flow, in conduit or thru	50050-1-0	Effluent Gross		.002	MGD			MGD							N
KY0083755	Timberland Subdivision WWTP	McCracken	001-1	12/31/2018	Flow, in conduit or thru	50050-1-0	Effluent Gross				.002	MGD	MGD							N
KY0083755	Timberland Subdivision WWTP	McCracken	001-1	11/30/2018	Flow, in conduit or thru	50050-1-0	Effluent Gross		.002	MGD			MGD							N
KY0083755	Timberland Subdivision WWTP	McCracken	001-1	11/30/2018	Flow, in conduit or thru	50050-1-0	Effluent Gross				.002	MGD	MGD							N
KY0083755	Timberland Subdivision WWTP	McCracken	001-1	10/31/2018	Flow, in conduit or thru	50050-1-0	Effluent Gross		.002	MGD			MGD							N
KY0083755	Timberland Subdivision WWTP	McCracken	001-1	10/31/2018	Flow, in conduit or thru	50050-1-0	Effluent Gross				.002	MGD	MGD							N
KY0083755	Timberland Subdivision WWTP	McCracken	001-1	09/30/2018	Flow, in conduit or thru	50050-1-0	Effluent Gross		.002	MGD			MGD							N
KY0083755	Timberland Subdivision WWTP	McCracken	001-1	09/30/2018	Flow, in conduit or thru	50050-1-0	Effluent Gross				.002	MGD	MGD							N
KY0083755	Timberland Subdivision WWTP	McCracken	001-1	08/31/2018	Flow, in conduit or thru	50050-1-0	Effluent Gross		.002	MGD			MGD							N
KY0083755	Timberland Subdivision WWTP	McCracken	001-1	08/31/2018	Flow, in conduit or thru	50050-1-0	Effluent Gross				.002	MGD	MGD							N
KY0083755	Timberland Subdivision WWTP	McCracken	001-1	07/31/2018	Flow, in conduit or thru	50050-1-0	Effluent Gross		.002	MGD			MGD							N
KY0083755	Timberland Subdivision WWTP	McCracken	001-1	07/31/2018	Flow, in conduit or thru	50050-1-0	Effluent Gross				.002	MGD	MGD							N
KY0083755	Timberland Subdivision WWTP	McCracken	001-1	06/30/2018	Flow, in conduit or thru	50050-1-0	Effluent Gross		.002	MGD			MGD							N
KY0083755	Timberland Subdivision WWTP	McCracken	001-1	06/30/2018	Flow, in conduit or thru	50050-1-0	Effluent Gross				.002	MGD	MGD							N
KY0083755	Timberland Subdivision WWTP	McCracken	001-1	05/31/2018	Flow, in conduit or thru	50050-1-0	Effluent Gross		.002	MGD			MGD							N
KY0083755	Timberland Subdivision WWTP	McCracken	001-1	05/31/2018	Flow, in conduit or thru	50050-1-0	Effluent Gross				.002	MGD	MGD							N
KY0083755	Timberland Subdivision WWTP	McCracken	001-1	04/30/2018	Flow, in conduit or thru	50050-1-0	Effluent Gross		.002	MGD			MGD							N
KY0083755	Timberland Subdivision WWTP	McCracken	001-1	04/30/2018	Flow, in conduit or thru	50050-1-0	Effluent Gross				.002	MGD	MGD							N
KY0083755	Timberland Subdivision WWTP	McCracken	001-1	03/31/2018	Flow, in conduit or thru	50050-1-0	Effluent Gross		.002	MGD			MGD							N
KY0083755	Timberland Subdivision WWTP	McCracken	001-1	03/31/2018	Flow, in conduit or thru	50050-1-0	Effluent Gross				.002	MGD	MGD							N
KY0083755	Timberland Subdivision WWTP	McCracken	001-1	02/28/2018	Flow, in conduit or thru	50050-1-0	Effluent Gross		.002	MGD			MGD							N
KY0083755	Timberland Subdivision WWTP	McCracken	001-1	02/28/2018	Flow, in conduit or thru	50050-1-0	Effluent Gross				.002	MGD	MGD							N
KY0083755	Timberland Subdivision WWTP	McCracken	001-1	01/31/2018	Flow, in conduit or thru	50050-1-0	Effluent Gross		.002	MGD			MGD							N
KY0083755	Timberland Subdivision WWTP	McCracken	001-1	01/31/2018	Flow, in conduit or thru	50050-1-0	Effluent Gross				.002	MGD	MGD							N
KY0083755	Timberland Subdivision WWTP	McCracken	001-1	12/31/2017	Flow, in conduit or thru	50050-1-0	Effluent Gross		.002	MGD			MGD							N
KY0083755	Timberland Subdivision WWTP	McCracken	001-1	12/31/2017	Flow, in conduit or thru	50050-1-0	Effluent Gross				.002	MGD	MGD							N
KY0083755	Timberland Subdivision WWTP	McCracken	001-1	11/30/2017	Flow, in conduit or thru	50050-1-0	Effluent Gross		.002	MGD			MGD							N
KY0083755	Timberland Subdivision WWTP	McCracken	001-1	11/30/2017	Flow, in conduit or thru	50050-1-0	Effluent Gross				.002	MGD	MGD							N
KY0083755	Timberland Subdivision WWTP	McCracken	001-1	10/31/2017	Flow, in conduit or thru	50050-1-0	Effluent Gross		.002	MGD			MGD							N
KY0083755	Timberland Subdivision WWTP	McCracken	001-1	10/31/2017	Flow, in conduit or thru	50050-1-0	Effluent Gross				.002	MGD	MGD							N
KY0083755	Timberland Subdivision WWTP	McCracken	001-1	09/30/2017	Flow, in conduit or thru	50050-1-0	Effluent Gross		.002	MGD			MGD							N
KY0083755	Timberland Subdivision WWTP	McCracken	001-1	09/30/2017	Flow, in conduit or thru	50050-1-0	Effluent Gross				.002	MGD	MGD							N
KY0083755	Timberland Subdivision WWTP	McCracken	001-1	08/31/2017	Flow, in conduit or thru	50050-1-0	Effluent Gross		.002	MGD			MGD							N
KY0083755	Timberland Subdivision WWTP	McCracken	001-1	08/31/2017	Flow, in conduit or thru	50050-1-0	Effluent Gross				.002	MGD	MGD							N
KY0083755	Timberland Subdivision WWTP	McCracken	001-1	07/31/2017	Flow, in conduit or thru	50050-1-0	Effluent Gross		.002	MGD			MGD							N
KY0083755	Timberland Subdivision WWTP	McCracken	001-1	07/31/2017	Flow, in conduit or thru	50050-1-0	Effluent Gross				.002	MGD	MGD							N
KY0083755	Timberland Subdivision WWTP	McCracken	001-1	06/30/2017	Flow, in conduit or thru	50050-1-0	Effluent Gross		.002	MGD			MGD							N
KY0083755	Timberland Subdivision WWTP	McCracken	001-1	06/30/2017	Flow, in conduit or thru	50050-1-0	Effluent Gross				.002	MGD	MGD							N
KY0083755	Timberland Subdivision WWTP	McCracken	001-1	05/31/2017	Flow, in conduit or thru	50050-1-0	Effluent Gross		.002	MGD			MGD							N
KY0083755	Timberland Subdivision WWTP	McCracken	001-1	05/31/2017	Flow, in conduit or thru	50050-1-0	Effluent Gross				.002	MGD	MGD							N
KY0083755	Timberland Subdivision WWTP	McCracken	001-1	04/30/2017	Flow, in conduit or thru	50050-1-0	Effluent Gross		.002	MGD			MGD							N
KY0083755	Timberland Subdivision WWTP	McCracken	001-1	04/30/2017	Flow, in conduit or thru	50050-1-0	Effluent Gross				.002	MGD	MGD							N
KY0083755	Timberland Subdivision WWTP	McCracken	001-1	03/31/2017	Flow, in conduit or thru	50050-1-0	Effluent Gross		.002	MGD			MGD							N
KY0083755	Timberland Subdivision WWTP	McCracken	001-1	03/31/2017	Flow, in conduit or thru	50050-1-0	Effluent Gross				.002	MGD	MGD							N
KY0083755	Timberland Subdivision WWTP	McCracken	001-1	02/28/2017	Flow, in conduit or thru	50050-1-0	Effluent Gross		.002	MGD			MGD							N
KY0083755	Timberland Subdivision WWTP	McCracken	001-1	02/28/2017	Flow, in conduit or thru	50050-1-0	Effluent Gross				.002	MGD	MGD							N
KY0083755	Timberland Subdivision WWTP	McCracken	001-1	01/31/2017	Flow, in conduit or thru	50050-1-0	Effluent Gross		.002	MGD			MGD							N
KY0083755	Timberland Subdivision WWTP	McCracken	001-1	01/31/2017	Flow, in conduit or thru	50050-1-0	Effluent Gross				.002	MGD	MGD							N
KY0083755	Timberland Subdivision WWTP	McCracken	001-1	12/31/2016	Flow, in conduit or thru	50050-1-0	Effluent Gross		.002	MGD			MGD							N
KY0083755	Timberland Subdivision WWTP	McCracken	001-1	12/31/2016	Flow, in conduit or thru	50050-1-0	Effluent Gross				.002	MGD	MGD							N
KY0083755	Timberland Subdivision WWTP	McCracken	001-1	11/30/2016	Flow, in conduit or thru	50050-1-0	Effluent Gross		.002	MGD			MGD							N
KY0083755	Timberland Subdivision WWTP	McCracken	001-1	11/30/2016	Flow, in conduit or thru	50050-1-0	Effluent Gross				.002	MGD	MGD							N
KY0083755	Timberland Subdivision WWTP	McCracken	001-1	10/31/2016	Flow, in conduit or thru	50050-1-0	Effluent Gross		.002	MGD			MGD							N
KY0083755	Timberland Subdivision WWTP	McCracken	001-1	10/31/2016	Flow, in conduit or thru	50050-1-0	Effluent Gross				.002	MGD	MGD							N
KY0083755	Timberland Subdivision WWTP	McCracken	001-1	09/30/2016	Flow, in conduit or thru	50050-1-0	Effluent Gross		.002	MGD			MGD							N
KY0083755	Timberland Subdivision WWTP	McCracken	001-1	09/30/2016	Flow, in conduit or thru	50050-1-0	Effluent Gross				.002	MGD	MGD							N
KY0083755	Timberland Subdivision WWTP	McCracken	001-1	08/31/2016	Flow, in conduit or thru	50050-1-0	Effluent Gross		.002	MGD			MGD							N
KY0083755	Timberland Subdivision WWTP	McCracken	001-1	08/31/2016	Flow, in conduit or thru	50050-1-0	Effluent Gross				.002	MGD	MGD							N
KY0083755	Timberland Subdivision WWTP	McCracken	001-1	07/31/2016	Flow, in conduit or thru	50050-1-0	Effluent Gross		.002	MGD			MGD							N
KY0083755	Timberland Subdivision WWTP	McCracken	001-1	07/31/2016	Flow, in conduit or thru	50050-1-0	Effluent Gross				.002	MGD	MGD							N
KY0083755	Timberland Subdivision WWTP	McCracken	001-1	06/30/2016	Flow, in conduit or thru	50050-1-0	Effluent Gross		.002	MGD			MGD							N
KY0083755	Timberland Subdivision WWTP	McCracken	001-1	06/30/2016	Flow, in conduit or thru	50050-1-0	Effluent Gross				.002	MGD	MGD							N
KY0083755	Timberland Subdivision WWTP	McCracken	001-1	05/31/2016	Flow, in conduit or thru	50050-1-0	Effluent Gross		.002	MGD			MGD							N

KY0083755	Timberland Subdivision WWTP	McCracken	001-1	05/31/2016	Flow, in conduit or thru	50050-1-0	Effluent Gross				.002	MGD	MGD							N
KY0083755	Timberland Subdivision WWTP	McCracken	001-1	04/30/2016	Flow, in conduit or thru	50050-1-0	Effluent Gross		.002	MGD			MGD							N
KY0083755	Timberland Subdivision WWTP	McCracken	001-1	04/30/2016	Flow, in conduit or thru	50050-1-0	Effluent Gross				.002	MGD	MGD							N
KY0083755	Timberland Subdivision WWTP	McCracken	001-1	03/31/2016	Flow, in conduit or thru	50050-1-0	Effluent Gross		.002	MGD			MGD							N
KY0083755	Timberland Subdivision WWTP	McCracken	001-1	03/31/2016	Flow, in conduit or thru	50050-1-0	Effluent Gross				.002	MGD	MGD							N
KY0083755	Timberland Subdivision WWTP	McCracken	001-1	02/29/2016	Flow, in conduit or thru	50050-1-0	Effluent Gross		.002	MGD			MGD							N
KY0083755	Timberland Subdivision WWTP	McCracken	001-1	02/29/2016	Flow, in conduit or thru	50050-1-0	Effluent Gross				.002	MGD	MGD							N
KY0083755	Timberland Subdivision WWTP	McCracken	001-1	02/28/2021	Chlorine, total residual	50060-1-0	Effluent Gross	18809								2.08	mg/L			mg/L	Y
KY0083755	Timberland Subdivision WWTP	McCracken	001-1	02/28/2021	Chlorine, total residual	50060-1-0	Effluent Gross	10847										2.08	mg/L	mg/L	Y
KY0083755	Timberland Subdivision WWTP	McCracken	001-1	01/31/2021	Chlorine, total residual	50060-1-0	Effluent Gross	19900								2.2	mg/L			mg/L	Y
KY0083755	Timberland Subdivision WWTP	McCracken	001-1	01/31/2021	Chlorine, total residual	50060-1-0	Effluent Gross	11479										2.2	mg/L	mg/L	Y
KY0083755	Timberland Subdivision WWTP	McCracken	001-1	12/31/2020	Chlorine, total residual	50060-1-0	Effluent Gross	18627								2.06	mg/L			mg/L	Y
KY0083755	Timberland Subdivision WWTP	McCracken	001-1	12/31/2020	Chlorine, total residual	50060-1-0	Effluent Gross	10742										2.06	mg/L	mg/L	Y
KY0083755	Timberland Subdivision WWTP	McCracken	001-1	11/30/2020	Chlorine, total residual	50060-1-0	Effluent Gross	12809								1.42	mg/L			mg/L	Y
KY0083755	Timberland Subdivision WWTP	McCracken	001-1	11/30/2020	Chlorine, total residual	50060-1-0	Effluent Gross	7374										1.42	mg/L	mg/L	Y
KY0083755	Timberland Subdivision WWTP	McCracken	001-1	10/31/2020	Chlorine, total residual	50060-1-0	Effluent Gross	445								.06	mg/L			mg/L	Y
KY0083755	Timberland Subdivision WWTP	McCracken	001-1	10/31/2020	Chlorine, total residual	50060-1-0	Effluent Gross	216										.06	mg/L	mg/L	Y
KY0083755	Timberland Subdivision WWTP	McCracken	001-1	09/30/2020	Chlorine, total residual	50060-1-0	Effluent Gross									NODI B		NODI B		mg/L	N
KY0083755	Timberland Subdivision WWTP	McCracken	001-1	08/31/2020	Chlorine, total residual	50060-1-0	Effluent Gross	10127								1.125	mg/L			mg/L	Y
KY0083755	Timberland Subdivision WWTP	McCracken	001-1	08/31/2020	Chlorine, total residual	50060-1-0	Effluent Gross	11479										2.2	mg/L	mg/L	Y
KY0083755	Timberland Subdivision WWTP	McCracken	001-1	07/31/2020	Chlorine, total residual	50060-1-0	Effluent Gross	19900								2.2	mg/L			mg/L	Y
KY0083755	Timberland Subdivision WWTP	McCracken	001-1	07/31/2020	Chlorine, total residual	50060-1-0	Effluent Gross	11479										2.2	mg/L	mg/L	Y
KY0083755	Timberland Subdivision WWTP	McCracken	001-1	06/30/2020	Chlorine, total residual	50060-1-0	Effluent Gross	173								.03	mg/L			mg/L	Y
KY0083755	Timberland Subdivision WWTP	McCracken	001-1	06/30/2020	Chlorine, total residual	50060-1-0	Effluent Gross	58										.03	mg/L	mg/L	Y
KY0083755	Timberland Subdivision WWTP	McCracken	001-1	05/31/2020	Chlorine, total residual	50060-1-0	Effluent Gross	355								.05	mg/L			mg/L	Y
KY0083755	Timberland Subdivision WWTP	McCracken	001-1	05/31/2020	Chlorine, total residual	50060-1-0	Effluent Gross	163										.05	mg/L	mg/L	Y
KY0083755	Timberland Subdivision WWTP	McCracken	001-1	04/30/2020	Chlorine, total residual	50060-1-0	Effluent Gross									NODI B		NODI B		mg/L	N
KY0083755	Timberland Subdivision WWTP	McCracken	001-1	03/31/2020	Chlorine, total residual	50060-1-0	Effluent Gross									NODI B		NODI B		mg/L	N
KY0083755	Timberland Subdivision WWTP	McCracken	001-1	02/29/2020	Chlorine, total residual	50060-1-0	Effluent Gross									NODI B		NODI B		mg/L	N
KY0083755	Timberland Subdivision WWTP	McCracken	001-1	01/31/2020	Chlorine, total residual	50060-1-0	Effluent Gross									NODI B		NODI B		mg/L	N
KY0083755	Timberland Subdivision WWTP	McCracken	001-1	12/31/2019	Chlorine, total residual	50060-1-0	Effluent Gross									NODI B		NODI B		mg/L	N
KY0083755	Timberland Subdivision WWTP	McCracken	001-1	11/30/2019	Chlorine, total residual	50060-1-0	Effluent Gross									NODI B		NODI B		mg/L	N
KY0083755	Timberland Subdivision WWTP	McCracken	001-1	10/31/2019	Chlorine, total residual	50060-1-0	Effluent Gross									NODI B		NODI B		mg/L	N
KY0083755	Timberland Subdivision WWTP	McCracken	001-1	09/30/2019	Chlorine, total residual	50060-1-0	Effluent Gross									NODI B		NODI B		mg/L	N
KY0083755	Timberland Subdivision WWTP	McCracken	001-1	08/31/2019	Chlorine, total residual	50060-1-0	Effluent Gross									NODI B		NODI B		mg/L	N
KY0083755	Timberland Subdivision WWTP	McCracken	001-1	07/31/2019	Chlorine, total residual	50060-1-0	Effluent Gross									NODI B		NODI B		mg/L	N
KY0083755	Timberland Subdivision WWTP	McCracken	001-1	06/30/2019	Chlorine, total residual	50060-1-0	Effluent Gross									NODI B		NODI B		mg/L	N
KY0083755	Timberland Subdivision WWTP	McCracken	001-1	05/31/2019	Chlorine, total residual	50060-1-0	Effluent Gross									NODI B		NODI B		mg/L	N
KY0083755	Timberland Subdivision WWTP	McCracken	001-1	04/30/2019	Chlorine, total residual	50060-1-0	Effluent Gross									NODI B		NODI B		mg/L	N
KY0083755	Timberland Subdivision WWTP	McCracken	001-1	03/31/2019	Chlorine, total residual	50060-1-0	Effluent Gross									NODI B		NODI B		mg/L	N
KY0083755	Timberland Subdivision WWTP	McCracken	001-1	02/28/2019	Chlorine, total residual	50060-1-0	Effluent Gross									NODI B		NODI B		mg/L	N
KY0083755	Timberland Subdivision WWTP	McCracken	001-1	01/31/2019	Chlorine, total residual	50060-1-0	Effluent Gross									NODI B		NODI B		mg/L	N
KY0083755	Timberland Subdivision WWTP	McCracken	001-1	12/31/2018	Chlorine, total residual	50060-1-0	Effluent Gross									NODI B		NODI B		mg/L	N
KY0083755	Timberland Subdivision WWTP	McCracken	001-1	11/30/2018	Chlorine, total residual	50060-1-0	Effluent Gross									NODI B		NODI B		mg/L	N
KY0083755	Timberland Subdivision WWTP	McCracken	001-1	10/31/2018	Chlorine, total residual	50060-1-0	Effluent Gross									NODI B		NODI B		mg/L	N
KY0083755	Timberland Subdivision WWTP	McCracken	001-1	09/30/2018	Chlorine, total residual	50060-1-0	Effluent Gross									NODI B		NODI B		mg/L	N
KY0083755	Timberland Subdivision WWTP	McCracken	001-1	08/31/2018	Chlorine, total residual	50060-1-0	Effluent Gross									NODI B		NODI B		mg/L	N
KY0083755	Timberland Subdivision WWTP	McCracken	001-1	07/31/2018	Chlorine, total residual	50060-1-0	Effluent Gross									NODI B		NODI B		mg/L	N
KY0083755	Timberland Subdivision WWTP	McCracken	001-1	06/30/2018	Chlorine, total residual	50060-1-0	Effluent Gross									NODI B		NODI B		mg/L	N
KY0083755	Timberland Subdivision WWTP	McCracken	001-1	05/31/2018	Chlorine, total residual	50060-1-0	Effluent Gross									NODI B		NODI B		mg/L	N
KY0083755	Timberland Subdivision WWTP	McCracken	001-1	04/30/2018	Chlorine, total residual	50060-1-0	Effluent Gross									NODI B		NODI B		mg/L	N
KY0083755	Timberland Subdivision WWTP	McCracken	001-1	03/31/2018	Chlorine, total residual	50060-1-0	Effluent Gross									NODI B		NODI B		mg/L	N
KY0083755	Timberland Subdivision WWTP	McCracken	001-1	02/28/2018	Chlorine, total residual	50060-1-0	Effluent Gross									NODI B		NODI B		mg/L	N
KY0083755	Timberland Subdivision WWTP	McCracken	001-1	01/31/2018	Chlorine, total residual	50060-1-0	Effluent Gross									NODI B		NODI B		mg/L	N
KY0083755	Timberland Subdivision WWTP	McCracken	001-1	12/31/2017	Chlorine, total residual	50060-1-0	Effluent Gross									NODI B		NODI B		mg/L	N
KY0083755	Timberland Subdivision WWTP	McCracken	001-1	11/30/2017	Chlorine, total residual	50060-1-0	Effluent Gross									NODI B		NODI B		mg/L	N
KY0083755	Timberland Subdivision WWTP	McCracken	001-1	10/31/2017	Chlorine, total residual	50060-1-0	Effluent Gross									NODI B		NODI B		mg/L	N
KY0083755	Timberland Subdivision WWTP	McCracken	001-1	09/30/2017	Chlorine, total residual	50060-1-0	Effluent Gross									NODI B		NODI B		mg/L	N
KY0083755	Timberland Subdivision WWTP	McCracken	001-1	08/31/2017	Chlorine, total residual	50060-1-0	Effluent Gross									NODI B		NODI B		mg/L	N
KY0083755	Timberland Subdivision WWTP	McCracken	001-1	07/31/2017	Chlorine, total residual	50060-1-0	Effluent Gross									NODI B		NODI B		mg/L	N
KY0083755	Timberland Subdivision WWTP	McCracken	001-1	06/30/2017	Chlorine, total residual	50060-1-0	Effluent Gross									NODI B		NODI B		mg/L	N
KY0083755	Timberland Subdivision WWTP	McCracken	001-1	05/31/2017	Chlorine, total residual	50060-1-0	Effluent Gross									NODI B		NODI B		mg/L	N
KY0083755	Timberland Subdivision WWTP	McCracken	001-1	04/30/2017	Chlorine, total residual	50060-1-0	Effluent Gross									NODI B		NODI B		mg/L	N
KY0083755	Timberland Subdivision WWTP	McCracken	001-1	03/31/2017	Chlorine, total residual	50060-1-0	Effluent Gross									NODI B		NODI B		mg/L	N
KY0083755	Timberland Subdivision WWTP	McCracken	001-1	02/28/2017	Chlorine, total residual	50060-1-0	Effluent Gross									NODI B		NODI B		mg/L	N
KY0083755	Timberland Subdivision WWTP	McCracken	001-1	01/31/2017	Chlorine, total residual	50060-1-0	Effluent Gross									NODI B		NODI B		mg/L	N
KY0083755	Timberland Subdivision WWTP	McCracken	001-1	12/31/2016	Chlorine, total residual	50060-1-0	Effluent Gross									NODI B		NODI B		mg/L	N
KY0083755	Timberland Subdivision WWTP	McCracken	001-1	11/30/2016	Chlorine, total residual	50060-1-0	Effluent Gross									NODI B		NODI B		mg/L	N
KY0083755	Timberland Subdivision WWTP	McCracken	001-1	10/31/2016	Chlorine, total residual	50060-1-0	Effluent Gross									NODI B		NODI B		mg/L	N
KY0083755	Timberland Subdivision WWTP	McCracken	001-1	09/30/2016	Chlorine, total residual	50060-1-0	Effluent Gross									NODI B		NODI B		mg/L	N
KY0083755	Timberland Subdivision WWTP	McCracken	001-1	08/31/2016	Chlorine, total residual	50060-1-0	Effluent Gross									NODI B		NODI B		mg/L	N
KY0083755	Timberland Subdivision WWTP	McCracken	001-1	07/31/2016	Chlorine, total residual	50060-1-0	Effluent Gross									NODI B		NODI B		mg/L	N
KY0083755	Timberland Subdivision WWTP	McCracken	001-1	06/30/2016	Chlorine, total residual	50060-1-0	Effluent Gross									NODI B		NODI B		mg/L	N
KY0083755	Timberland Subdivision WWTP	McCracken	001-1	05/31/2016	Chlorine, total residual	50060-1-0	Effluent Gross									NODI B		NODI B		mg/L	N
KY0083755	Timberland Subdivision WWTP	McCracken	001-1	04/30/2016	Chlorine, total residual	50060-1-0	Effluent Gross									NODI B		NODI B		mg/L	N
KY0083755	Timberland Subdivision WWTP	McCracken	001-1	03/31/2016	Chlorine, total residual	50060-1-0	Effluent Gross									NODI B		NODI B		mg/L	N
KY0083755	Timberland Subdivision WWTP	McCracken	001-1	02/29/2016	Chlorine, total residual	50060-1-0	Effluent Gross									NODI B		NODI B		mg/L	N
KY0083755	Timberland Subdivision WWTP	McCracken	001-1	02/28/2021	E. coli	51040-1-0	Effluent Gross									2	#/100mL			#/100mL	N
KY0083755	Timberland Subdivision WWTP	McCracken	001-1	02/28/2021	E. coli	51040-1-0	Effluent Gross											2	#/100mL	#/100mL	N
KY0083755	Timberland Subdivision WWTP	McCracken	001-1	01/31/2021	E. coli	51040-1-0	Effluent Gross									1	#/100mL			#/100mL	N
KY0083755	Timberland Subdivision WWTP	McCracken	001-1	01/31/2021	E. coli	51040-1-0	Effluent Gross											1	#/100mL	#/100mL	N
KY0083755	Timberland Subdivision WWTP	McCracken	001-1	12/31/2020	E. coli	51040-1-0	Effluent Gross									1	#/100mL			#/100mL	N
KY0083755	Timberland Subdivision WWTP	McCracken	001-1	12/31/2020	E. coli	51040-1-0	Effluent Gross											1	#/100mL	#/100mL	N
KY0083755	Timberland Subdivision WWTP	McCracken	001-1	11/30/2020	E. coli	51040-1-0	Effluent Gross									70	#/100mL			#/100mL	N
KY0083755	Timberland Subdivision WWTP	McCracken	001-1	11/30/2020	E. coli	51040-1-0	Effluent Gross											70	#/100mL	#/100mL	N
KY0083755	Timberland Subdivision WWTP	McCracken	001-1	10/31/2020	E. coli	51040-1-0	Effluent Gross	46054								60000	#/100mL			#/100mL	Y
KY0083755	Timberland Subdivision WWTP	McCracken	001-1	10/31/2020	E. coli	51040-1-0	Effluent Gross	24900										60000	#/100mL	#/100mL	Y
KY0083755	Timberland Subdivision WWTP	McCracken	001-1	09/30/2020	E. coli	51040-1-0	Effluent Gross	46054								60000	#/100mL			#/100mL	Y
KY0083755	Timberland Subdivision WWTP	McCracken	001-1	09/30/2020	E. coli	51040-1-0	Effluent Gross	24900										60000	#/100mL	#/100mL	Y
KY0083755	Timberland Subdivision WWTP	McCracken	001-1	08/31/2020	E. coli	51040-1-0	Effluent Gross									3	#/100mL			#/100mL	N

KY0083755	Timberland Subdivision WWTP	McCracken	001-1	08/31/2020	E. coli	51040-1-0	Effluent Gross											8	#/100mL	#/100mL	N
KY0083755	Timberland Subdivision WWTP	McCracken	001-1	07/31/2020	E. coli	51040-1-0	Effluent Gross									2	#/100mL			#/100mL	N
KY0083755	Timberland Subdivision WWTP	McCracken	001-1	07/31/2020	E. coli	51040-1-0	Effluent Gross											2	#/100mL	#/100mL	N
KY0083755	Timberland Subdivision WWTP	McCracken	001-1	06/30/2020	E. coli	51040-1-0	Effluent Gross	46054								60000	#/100mL			#/100mL	Y
KY0083755	Timberland Subdivision WWTP	McCracken	001-1	06/30/2020	E. coli	51040-1-0	Effluent Gross	24900										60000	#/100mL	#/100mL	Y
KY0083755	Timberland Subdivision WWTP	McCracken	001-1	05/31/2020	E. coli	51040-1-0	Effluent Gross	46054								60000	#/100mL			#/100mL	Y
KY0083755	Timberland Subdivision WWTP	McCracken	001-1	05/31/2020	E. coli	51040-1-0	Effluent Gross	24900										60000	#/100mL	#/100mL	Y
KY0083755	Timberland Subdivision WWTP	McCracken	001-1	04/30/2020	E. coli	51040-1-0	Effluent Gross									NODI B		NODI B		#/100mL	N
KY0083755	Timberland Subdivision WWTP	McCracken	001-1	03/31/2020	E. coli	51040-1-0	Effluent Gross									NODI B		NODI B		#/100mL	N
KY0083755	Timberland Subdivision WWTP	McCracken	001-1	02/29/2020	E. coli	51040-1-0	Effluent Gross									NODI B		NODI B		#/100mL	N
KY0083755	Timberland Subdivision WWTP	McCracken	001-1	01/31/2020	E. coli	51040-1-0	Effluent Gross									NODI B		NODI B		#/100mL	N
KY0083755	Timberland Subdivision WWTP	McCracken	001-1	12/31/2019	E. coli	51040-1-0	Effluent Gross									NODI B		NODI B		#/100mL	N
KY0083755	Timberland Subdivision WWTP	McCracken	001-1	11/30/2019	E. coli	51040-1-0	Effluent Gross									NODI B		NODI B		#/100mL	N
KY0083755	Timberland Subdivision WWTP	McCracken	001-1	10/31/2019	E. coli	51040-1-0	Effluent Gross									NODI B		NODI B		#/100mL	N
KY0083755	Timberland Subdivision WWTP	McCracken	001-1	09/30/2019	E. coli	51040-1-0	Effluent Gross									NODI B		NODI B		#/100mL	N
KY0083755	Timberland Subdivision WWTP	McCracken	001-1	08/31/2019	E. coli	51040-1-0	Effluent Gross									NODI B		NODI B		#/100mL	N
KY0083755	Timberland Subdivision WWTP	McCracken	001-1	07/31/2019	E. coli	51040-1-0	Effluent Gross									59	#/100mL			#/100mL	N
KY0083755	Timberland Subdivision WWTP	McCracken	001-1	07/31/2019	E. coli	51040-1-0	Effluent Gross											59	#/100mL	#/100mL	N
KY0083755	Timberland Subdivision WWTP	McCracken	001-1	06/30/2019	E. coli	51040-1-0	Effluent Gross									3	#/100mL			#/100mL	N
KY0083755	Timberland Subdivision WWTP	McCracken	001-1	06/30/2019	E. coli	51040-1-0	Effluent Gross											3	#/100mL	#/100mL	N
KY0083755	Timberland Subdivision WWTP	McCracken	001-1	05/31/2019	E. coli	51040-1-0	Effluent Gross									NODI B		NODI B		#/100mL	N
KY0083755	Timberland Subdivision WWTP	McCracken	001-1	04/30/2019	E. coli	51040-1-0	Effluent Gross									NODI B		NODI B		#/100mL	N
KY0083755	Timberland Subdivision WWTP	McCracken	001-1	03/31/2019	E. coli	51040-1-0	Effluent Gross									NODI B		NODI B		#/100mL	N
KY0083755	Timberland Subdivision WWTP	McCracken	001-1	02/28/2019	E. coli	51040-1-0	Effluent Gross									1	#/100mL			#/100mL	N
KY0083755	Timberland Subdivision WWTP	McCracken	001-1	02/28/2019	E. coli	51040-1-0	Effluent Gross											1	#/100mL	#/100mL	N
KY0083755	Timberland Subdivision WWTP	McCracken	001-1	01/31/2019	E. coli	51040-1-0	Effluent Gross									NODI B		NODI B		#/100mL	N
KY0083755	Timberland Subdivision WWTP	McCracken	001-1	12/31/2018	E. coli	51040-1-0	Effluent Gross									NODI B		NODI B		#/100mL	N
KY0083755	Timberland Subdivision WWTP	McCracken	001-1	11/30/2018	E. coli	51040-1-0	Effluent Gross									NODI B		NODI B		#/100mL	N
KY0083755	Timberland Subdivision WWTP	McCracken	001-1	10/31/2018	E. coli	51040-1-0	Effluent Gross									NODI B		NODI B		#/100mL	N
KY0083755	Timberland Subdivision WWTP	McCracken	001-1	09/30/2018	E. coli	51040-1-0	Effluent Gross									NODI B		NODI B		#/100mL	N
KY0083755	Timberland Subdivision WWTP	McCracken	001-1	08/31/2018	E. coli	51040-1-0	Effluent Gross									2	#/100mL			#/100mL	N
KY0083755	Timberland Subdivision WWTP	McCracken	001-1	08/31/2018	E. coli	51040-1-0	Effluent Gross											2	#/100mL	#/100mL	N
KY0083755	Timberland Subdivision WWTP	McCracken	001-1	07/31/2018	E. coli	51040-1-0	Effluent Gross									NODI B		NODI B		#/100mL	N
KY0083755	Timberland Subdivision WWTP	McCracken	001-1	06/30/2018	E. coli	51040-1-0	Effluent Gross									NODI B		NODI B		#/100mL	N
KY0083755	Timberland Subdivision WWTP	McCracken	001-1	05/31/2018	E. coli	51040-1-0	Effluent Gross									2	#/100mL			#/100mL	N
KY0083755	Timberland Subdivision WWTP	McCracken	001-1	05/31/2018	E. coli	51040-1-0	Effluent Gross											2	#/100mL	#/100mL	N
KY0083755	Timberland Subdivision WWTP	McCracken	001-1	04/30/2018	E. coli	51040-1-0	Effluent Gross									2	#/100mL			#/100mL	N
KY0083755	Timberland Subdivision WWTP	McCracken	001-1	04/30/2018	E. coli	51040-1-0	Effluent Gross											2	#/100mL	#/100mL	N
KY0083755	Timberland Subdivision WWTP	McCracken	001-1	03/31/2018	E. coli	51040-1-0	Effluent Gross									NODI B		NODI B		#/100mL	N
KY0083755	Timberland Subdivision WWTP	McCracken	001-1	02/28/2018	E. coli	51040-1-0	Effluent Gross									NODI B		NODI B		#/100mL	N
KY0083755	Timberland Subdivision WWTP	McCracken	001-1	01/31/2018	E. coli	51040-1-0	Effluent Gross									NODI B		NODI B		#/100mL	N
KY0083755	Timberland Subdivision WWTP	McCracken	001-1	12/31/2017	E. coli	51040-1-0	Effluent Gross									6	#/100mL			#/100mL	N
KY0083755	Timberland Subdivision WWTP	McCracken	001-1	12/31/2017	E. coli	51040-1-0	Effluent Gross											6	#/100mL	#/100mL	N
KY0083755	Timberland Subdivision WWTP	McCracken	001-1	11/30/2017	E. coli	51040-1-0	Effluent Gross									NODI B		NODI B		#/100mL	N
KY0083755	Timberland Subdivision WWTP	McCracken	001-1	10/31/2017	E. coli	51040-1-0	Effluent Gross									NODI B		NODI B		#/100mL	N
KY0083755	Timberland Subdivision WWTP	McCracken	001-1	09/30/2017	E. coli	51040-1-0	Effluent Gross									NODI B		NODI B		#/100mL	N
KY0083755	Timberland Subdivision WWTP	McCracken	001-1	08/31/2017	E. coli	51040-1-0	Effluent Gross									2	#/100mL			#/100mL	N
KY0083755	Timberland Subdivision WWTP	McCracken	001-1	08/31/2017	E. coli	51040-1-0	Effluent Gross											2	#/100mL	#/100mL	N
KY0083755	Timberland Subdivision WWTP	McCracken	001-1	07/31/2017	E. coli	51040-1-0	Effluent Gross									NODI B		NODI B		#/100mL	N
KY0083755	Timberland Subdivision WWTP	McCracken	001-1	06/30/2017	E. coli	51040-1-0	Effluent Gross									NODI B		NODI B		#/100mL	N
KY0083755	Timberland Subdivision WWTP	McCracken	001-1	05/31/2017	E. coli	51040-1-0	Effluent Gross									NODI B		NODI B		#/100mL	N
KY0083755	Timberland Subdivision WWTP	McCracken	001-1	04/30/2017	E. coli	51040-1-0	Effluent Gross									NODI B		NODI B		#/100mL	N
KY0083755	Timberland Subdivision WWTP	McCracken	001-1	03/31/2017	E. coli	51040-1-0	Effluent Gross									NODI B		NODI B		#/100mL	N
KY0083755	Timberland Subdivision WWTP	McCracken	001-1	02/28/2017	E. coli	51040-1-0	Effluent Gross									NODI B		NODI B		#/100mL	N
KY0083755	Timberland Subdivision WWTP	McCracken	001-1	01/31/2017	E. coli	51040-1-0	Effluent Gross									NODI B		NODI B		#/100mL	N
KY0083755	Timberland Subdivision WWTP	McCracken	001-1	12/31/2016	E. coli	51040-1-0	Effluent Gross									1	#/100mL			#/100mL	N
KY0083755	Timberland Subdivision WWTP	McCracken	001-1	12/31/2016	E. coli	51040-1-0	Effluent Gross											1	#/100mL	#/100mL	N
KY0083755	Timberland Subdivision WWTP	McCracken	001-1	11/30/2016	E. coli	51040-1-0	Effluent Gross									NODI B		NODI B		#/100mL	N
KY0083755	Timberland Subdivision WWTP	McCracken	001-1	10/31/2016	E. coli	51040-1-0	Effluent Gross									NODI B		NODI B		#/100mL	N
KY0083755	Timberland Subdivision WWTP	McCracken	001-1	09/30/2016	E. coli	51040-1-0	Effluent Gross									NODI B		NODI B		#/100mL	N
KY0083755	Timberland Subdivision WWTP	McCracken	001-1	08/31/2016	E. coli	51040-1-0	Effluent Gross									NODI B		NODI B		#/100mL	N
KY0083755	Timberland Subdivision WWTP	McCracken	001-1	07/31/2016	E. coli	51040-1-0	Effluent Gross									NODI B		NODI B		#/100mL	N
KY0083755	Timberland Subdivision WWTP	McCracken	001-1	06/30/2016	E. coli	51040-1-0	Effluent Gross									109	#/100mL			#/100mL	N
KY0083755	Timberland Subdivision WWTP	McCracken	001-1	06/30/2016	E. coli	51040-1-0	Effluent Gross											109	#/100mL	#/100mL	N
KY0083755	Timberland Subdivision WWTP	McCracken	001-1	05/31/2016	E. coli	51040-1-0	Effluent Gross									NODI B		NODI B		#/100mL	N
KY0083755	Timberland Subdivision WWTP	McCracken	001-1	04/30/2016	E. coli	51040-1-0	Effluent Gross									NODI B		NODI B		#/100mL	N
KY0083755	Timberland Subdivision WWTP	McCracken	001-1	03/31/2016	E. coli	51040-1-0	Effluent Gross									NODI B		NODI B		#/100mL	N
KY0083755	Timberland Subdivision WWTP	McCracken	001-1	02/29/2016	E. coli	51040-1-0	Effluent Gross									82	#/100mL			#/100mL	N
KY0083755	Timberland Subdivision WWTP	McCracken	001-1	02/29/2016	E. coli	51040-1-0	Effluent Gross											82	#/100mL	#/100mL	N
KY0083755	Timberland Subdivision WWTP	McCracken	001-1	02/28/2021	BOD, carbonaceous [5 day,	80082-1-0	Effluent Gross	110								21	mg/L			mg/L	Y
KY0083755	Timberland Subdivision WWTP	McCracken	001-1	02/28/2021	BOD, carbonaceous [5 day,	80082-1-0	Effluent Gross	40										21	mg/L	mg/L	Y
KY0083755	Timberland Subdivision WWTP	McCracken	001-1	01/31/2021	BOD, carbonaceous [5 day,	80082-1-0	Effluent Gross									< 5	mg/L			mg/L	N
KY0083755	Timberland Subdivision WWTP	McCracken	001-1	01/31/2021	BOD, carbonaceous [5 day,	80082-1-0	Effluent Gross											< 5	mg/L	mg/L	N
KY0083755	Timberland Subdivision WWTP	McCracken	001-1	12/31/2020	BOD, carbonaceous [5 day,	80082-1-0	Effluent Gross									< 5	mg/L			mg/L	N
KY0083755	Timberland Subdivision WWTP	McCracken	001-1	12/31/2020	BOD, carbonaceous [5 day,	80082-1-0	Effluent Gross											< 5	mg/L	mg/L	N
KY0083755	Timberland Subdivision WWTP	McCracken	001-1	11/30/2020	BOD, carbonaceous [5 day,	80082-1-0	Effluent Gross									10	mg/L			mg/L	N
KY0083755	Timberland Subdivision WWTP	McCracken	001-1	11/30/2020	BOD, carbonaceous [5 day,	80082-1-0	Effluent Gross											10	mg/L	mg/L	N
KY0083755	Timberland Subdivision WWTP	McCracken	001-1	10/31/2020	BOD, carbonaceous [5 day,	80082-1-0	Effluent Gross									< 5	mg/L			mg/L	N
KY0083755	Timberland Subdivision WWTP	McCracken	001-1	10/31/2020	BOD, carbonaceous [5 day,	80082-1-0	Effluent Gross											< 5	mg/L	mg/L	N
KY0083755	Timberland Subdivision WWTP	McCracken	001-1	09/30/2020	BOD, carbonaceous [5 day,	80082-1-0	Effluent Gross									< 8	mg/L			mg/L	N
KY0083755	Timberland Subdivision WWTP	McCracken	001-1	09/30/2020	BOD, carbonaceous [5 day,	80082-1-0	Effluent Gross											9	mg/L	mg/L	N
KY0083755	Timberland Subdivision WWTP	McCracken	001-1	08/31/2020	BOD, carbonaceous [5 day,	80082-1-0	Effluent Gross									7	mg/L			mg/L	N
KY0083755	Timberland Subdivision WWTP	McCracken	001-1	08/31/2020	BOD, carbonaceous [5 day,	80082-1-0	Effluent Gross											7	mg/L	mg/L	N
KY0083755	Timberland Subdivision WWTP	McCracken	001-1	07/31/2020	BOD, carbonaceous [5 day,	80082-1-0	Effluent Gross									8	mg/L			mg/L	N
KY0083755	Timberland Subdivision WWTP	McCracken	001-1	07/31/2020	BOD, carbonaceous [5 day,	80082-1-0	Effluent Gross											8	mg/L	mg/L	N
KY0083755	Timberland Subdivision WWTP	McCracken	001-1	06/30/2020	BOD, carbonaceous [5 day,	80082-1-0	Effluent Gross									7	mg/L			mg/L	N
KY0083755	Timberland Subdivision WWTP	McCracken	001-1	06/30/2020	BOD, carbonaceous [5 day,	80082-1-0	Effluent Gross											7	mg/L	mg/L	N
KY0083755	Timberland Subdivision WWTP	McCracken	001-1	05/31/2020	BOD, carbonaceous [5 day,	80082-1-0	Effluent Gross	10								11	mg/L			mg/L	Y
KY0083755	Timberland Subdivision WWTP	McCracken	001-1	05/31/2020	BOD, carbonaceous [5 day,	80082-1-0	Effluent Gross											11	mg/L	mg/L	N
KY0083755	Timberland Subdivision WWTP	McCracken	001-1	04/30/2020	BOD, carbonaceous [5 day,	80082-1-0	Effluent Gross									3	mg/L			mg/L	N

KY0083755	Timberland Subdivision WWTP	McCracken	001-1	04/30/2020	BOD, carbonaceous [5 day,	80082-1-0	Effluent Gross											3	mg/L	mg/L	N
KY0083755	Timberland Subdivision WWTP	McCracken	001-1	03/31/2020	BOD, carbonaceous [5 day,	80082-1-0	Effluent Gross	60								16	mg/L			mg/L	Y
KY0083755	Timberland Subdivision WWTP	McCracken	001-1	03/31/2020	BOD, carbonaceous [5 day,	80082-1-0	Effluent Gross	7										16	mg/L	mg/L	Y
KY0083755	Timberland Subdivision WWTP	McCracken	001-1	02/29/2020	BOD, carbonaceous [5 day,	80082-1-0	Effluent Gross	60								16	mg/L			mg/L	Y
KY0083755	Timberland Subdivision WWTP	McCracken	001-1	02/29/2020	BOD, carbonaceous [5 day,	80082-1-0	Effluent Gross	7										16	mg/L	mg/L	Y
KY0083755	Timberland Subdivision WWTP	McCracken	001-1	01/31/2020	BOD, carbonaceous [5 day,	80082-1-0	Effluent Gross		1.33	lb/d			lb/d								N
KY0083755	Timberland Subdivision WWTP	McCracken	001-1	01/31/2020	BOD, carbonaceous [5 day,	80082-1-0	Effluent Gross				1.33	lb/d	lb/d								N
KY0083755	Timberland Subdivision WWTP	McCracken	001-1	01/31/2020	BOD, carbonaceous [5 day,	80082-1-0	Effluent Gross									8	mg/L			mg/L	N
KY0083755	Timberland Subdivision WWTP	McCracken	001-1	01/31/2020	BOD, carbonaceous [5 day,	80082-1-0	Effluent Gross											8	mg/L	mg/L	N
KY0083755	Timberland Subdivision WWTP	McCracken	001-1	12/31/2019	BOD, carbonaceous [5 day,	80082-1-0	Effluent Gross		NODI B		NODI B		lb/d								N
KY0083755	Timberland Subdivision WWTP	McCracken	001-1	12/31/2019	BOD, carbonaceous [5 day,	80082-1-0	Effluent Gross									NODI B		NODI B		mg/L	N
KY0083755	Timberland Subdivision WWTP	McCracken	001-1	11/30/2019	BOD, carbonaceous [5 day,	80082-1-0	Effluent Gross		NODI B		NODI B		lb/d								N
KY0083755	Timberland Subdivision WWTP	McCracken	001-1	11/30/2019	BOD, carbonaceous [5 day,	80082-1-0	Effluent Gross									NODI B		NODI B		mg/L	N
KY0083755	Timberland Subdivision WWTP	McCracken	001-1	10/31/2019	BOD, carbonaceous [5 day,	80082-1-0	Effluent Gross		NODI B		NODI B		lb/d								N
KY0083755	Timberland Subdivision WWTP	McCracken	001-1	10/31/2019	BOD, carbonaceous [5 day,	80082-1-0	Effluent Gross									NODI B		NODI B		mg/L	N
KY0083755	Timberland Subdivision WWTP	McCracken	001-1	09/30/2019	BOD, carbonaceous [5 day,	80082-1-0	Effluent Gross		.63	lb/d			lb/d								N
KY0083755	Timberland Subdivision WWTP	McCracken	001-1	09/30/2019	BOD, carbonaceous [5 day,	80082-1-0	Effluent Gross				.63	lb/d	lb/d								N
KY0083755	Timberland Subdivision WWTP	McCracken	001-1	09/30/2019	BOD, carbonaceous [5 day,	80082-1-0	Effluent Gross									3	mg/L			mg/L	N
KY0083755	Timberland Subdivision WWTP	McCracken	001-1	09/30/2019	BOD, carbonaceous [5 day,	80082-1-0	Effluent Gross											3	mg/L	mg/L	N
KY0083755	Timberland Subdivision WWTP	McCracken	001-1	08/31/2019	BOD, carbonaceous [5 day,	80082-1-0	Effluent Gross		.63	lb/d			lb/d								N
KY0083755	Timberland Subdivision WWTP	McCracken	001-1	08/31/2019	BOD, carbonaceous [5 day,	80082-1-0	Effluent Gross				.63	lb/d	lb/d								N
KY0083755	Timberland Subdivision WWTP	McCracken	001-1	08/31/2019	BOD, carbonaceous [5 day,	80082-1-0	Effluent Gross									3	mg/L			mg/L	N
KY0083755	Timberland Subdivision WWTP	McCracken	001-1	08/31/2019	BOD, carbonaceous [5 day,	80082-1-0	Effluent Gross											3	mg/L	mg/L	N
KY0083755	Timberland Subdivision WWTP	McCracken	001-1	07/31/2019	BOD, carbonaceous [5 day,	80082-1-0	Effluent Gross		.625	lb/d			lb/d								N
KY0083755	Timberland Subdivision WWTP	McCracken	001-1	07/31/2019	BOD, carbonaceous [5 day,	80082-1-0	Effluent Gross				.625	lb/d	lb/d								N
KY0083755	Timberland Subdivision WWTP	McCracken	001-1	07/31/2019	BOD, carbonaceous [5 day,	80082-1-0	Effluent Gross									3	mg/L			mg/L	N
KY0083755	Timberland Subdivision WWTP	McCracken	001-1	07/31/2019	BOD, carbonaceous [5 day,	80082-1-0	Effluent Gross											3	mg/L	mg/L	N
KY0083755	Timberland Subdivision WWTP	McCracken	001-1	06/30/2019	BOD, carbonaceous [5 day,	80082-1-0	Effluent Gross		.033	lb/d			lb/d								N
KY0083755	Timberland Subdivision WWTP	McCracken	001-1	06/30/2019	BOD, carbonaceous [5 day,	80082-1-0	Effluent Gross				.033	lb/d	lb/d								N
KY0083755	Timberland Subdivision WWTP	McCracken	001-1	06/30/2019	BOD, carbonaceous [5 day,	80082-1-0	Effluent Gross									2	mg/L			mg/L	N
KY0083755	Timberland Subdivision WWTP	McCracken	001-1	06/30/2019	BOD, carbonaceous [5 day,	80082-1-0	Effluent Gross											2	mg/L	mg/L	N
KY0083755	Timberland Subdivision WWTP	McCracken	001-1	05/31/2019	BOD, carbonaceous [5 day,	80082-1-0	Effluent Gross		.12	lb/d			lb/d								N
KY0083755	Timberland Subdivision WWTP	McCracken	001-1	05/31/2019	BOD, carbonaceous [5 day,	80082-1-0	Effluent Gross				.12	lb/d	lb/d								N
KY0083755	Timberland Subdivision WWTP	McCracken	001-1	05/31/2019	BOD, carbonaceous [5 day,	80082-1-0	Effluent Gross									7	mg/L			mg/L	N
KY0083755	Timberland Subdivision WWTP	McCracken	001-1	05/31/2019	BOD, carbonaceous [5 day,	80082-1-0	Effluent Gross											7	mg/L	mg/L	N
KY0083755	Timberland Subdivision WWTP	McCracken	001-1	04/30/2019	BOD, carbonaceous [5 day,	80082-1-0	Effluent Gross		NODI B		NODI B		lb/d								N
KY0083755	Timberland Subdivision WWTP	McCracken	001-1	04/30/2019	BOD, carbonaceous [5 day,	80082-1-0	Effluent Gross									NODI B		NODI B		mg/L	N
KY0083755	Timberland Subdivision WWTP	McCracken	001-1	03/31/2019	BOD, carbonaceous [5 day,	80082-1-0	Effluent Gross		.05	lb/d			lb/d								N
KY0083755	Timberland Subdivision WWTP	McCracken	001-1	03/31/2019	BOD, carbonaceous [5 day,	80082-1-0	Effluent Gross				.05	lb/d	lb/d								N
KY0083755	Timberland Subdivision WWTP	McCracken	001-1	03/31/2019	BOD, carbonaceous [5 day,	80082-1-0	Effluent Gross									3	mg/L			mg/L	N
KY0083755	Timberland Subdivision WWTP	McCracken	001-1	03/31/2019	BOD, carbonaceous [5 day,	80082-1-0	Effluent Gross											3	mg/L	mg/L	N
KY0083755	Timberland Subdivision WWTP	McCracken	001-1	02/28/2019	BOD, carbonaceous [5 day,	80082-1-0	Effluent Gross		NODI B		NODI B		lb/d								N
KY0083755	Timberland Subdivision WWTP	McCracken	001-1	02/28/2019	BOD, carbonaceous [5 day,	80082-1-0	Effluent Gross									NODI B		NODI B		mg/L	N
KY0083755	Timberland Subdivision WWTP	McCracken	001-1	01/31/2019	BOD, carbonaceous [5 day,	80082-1-0	Effluent Gross		NODI B		NODI B		lb/d								N
KY0083755	Timberland Subdivision WWTP	McCracken	001-1	01/31/2019	BOD, carbonaceous [5 day,	80082-1-0	Effluent Gross									NODI B		NODI B		mg/L	N
KY0083755	Timberland Subdivision WWTP	McCracken	001-1	12/31/2018	BOD, carbonaceous [5 day,	80082-1-0	Effluent Gross		NODI B		NODI B		lb/d								N
KY0083755	Timberland Subdivision WWTP	McCracken	001-1	12/31/2018	BOD, carbonaceous [5 day,	80082-1-0	Effluent Gross									NODI B		NODI B		mg/L	N
KY0083755	Timberland Subdivision WWTP	McCracken	001-1	11/30/2018	BOD, carbonaceous [5 day,	80082-1-0	Effluent Gross		NODI B		NODI B		lb/d								N
KY0083755	Timberland Subdivision WWTP	McCracken	001-1	11/30/2018	BOD, carbonaceous [5 day,	80082-1-0	Effluent Gross									NODI B		NODI B		mg/L	N
KY0083755	Timberland Subdivision WWTP	McCracken	001-1	10/31/2018	BOD, carbonaceous [5 day,	80082-1-0	Effluent Gross		NODI B		NODI B		lb/d								N
KY0083755	Timberland Subdivision WWTP	McCracken	001-1	10/31/2018	BOD, carbonaceous [5 day,	80082-1-0	Effluent Gross									NODI B		NODI B		mg/L	N
KY0083755	Timberland Subdivision WWTP	McCracken	001-1	09/30/2018	BOD, carbonaceous [5 day,	80082-1-0	Effluent Gross		NODI B		NODI B		lb/d								N
KY0083755	Timberland Subdivision WWTP	McCracken	001-1	09/30/2018	BOD, carbonaceous [5 day,	80082-1-0	Effluent Gross									NODI B		NODI B		mg/L	N
KY0083755	Timberland Subdivision WWTP	McCracken	001-1	08/31/2018	BOD, carbonaceous [5 day,	80082-1-0	Effluent Gross		.05	lb/d			lb/d								N
KY0083755	Timberland Subdivision WWTP	McCracken	001-1	08/31/2018	BOD, carbonaceous [5 day,	80082-1-0	Effluent Gross				.05	lb/d	lb/d								N
KY0083755	Timberland Subdivision WWTP	McCracken	001-1	08/31/2018	BOD, carbonaceous [5 day,	80082-1-0	Effluent Gross									3	mg/L			mg/L	N
KY0083755	Timberland Subdivision WWTP	McCracken	001-1	08/31/2018	BOD, carbonaceous [5 day,	80082-1-0	Effluent Gross											3	mg/L	mg/L	N
KY0083755	Timberland Subdivision WWTP	McCracken	001-1	07/31/2018	BOD, carbonaceous [5 day,	80082-1-0	Effluent Gross		.033	lb/d			lb/d								N
KY0083755	Timberland Subdivision WWTP	McCracken	001-1	07/31/2018	BOD, carbonaceous [5 day,	80082-1-0	Effluent Gross				.033	lb/d	lb/d								N
KY0083755	Timberland Subdivision WWTP	McCracken	001-1	07/31/2018	BOD, carbonaceous [5 day,	80082-1-0	Effluent Gross									2	mg/L			mg/L	N
KY0083755	Timberland Subdivision WWTP	McCracken	001-1	07/31/2018	BOD, carbonaceous [5 day,	80082-1-0	Effluent Gross											2	mg/L	mg/L	N
KY0083755	Timberland Subdivision WWTP	McCracken	001-1	06/30/2018	BOD, carbonaceous [5 day,	80082-1-0	Effluent Gross		.066	lb/d			lb/d								N
KY0083755	Timberland Subdivision WWTP	McCracken	001-1	06/30/2018	BOD, carbonaceous [5 day,	80082-1-0	Effluent Gross				.066	lb/d	lb/d								N
KY0083755	Timberland Subdivision WWTP	McCracken	001-1	06/30/2018	BOD, carbonaceous [5 day,	80082-1-0	Effluent Gross									4	mg/L			mg/L	N
KY0083755	Timberland Subdivision WWTP	McCracken	001-1	06/30/2018	BOD, carbonaceous [5 day,	80082-1-0	Effluent Gross											4	mg/L	mg/L	N
KY0083755	Timberland Subdivision WWTP	McCracken	001-1	05/31/2018	BOD, carbonaceous [5 day,	80082-1-0	Effluent Gross		NODI B		NODI B		lb/d								N
KY0083755	Timberland Subdivision WWTP	McCracken	001-1	05/31/2018	BOD, carbonaceous [5 day,	80082-1-0	Effluent Gross									NODI B		NODI B		mg/L	N
KY0083755	Timberland Subdivision WWTP	McCracken	001-1	04/30/2018	BOD, carbonaceous [5 day,	80082-1-0	Effluent Gross		NODI B		NODI B		lb/d								N
KY0083755	Timberland Subdivision WWTP	McCracken	001-1	04/30/2018	BOD, carbonaceous [5 day,	80082-1-0	Effluent Gross									NODI B		NODI B		mg/L	N
KY0083755	Timberland Subdivision WWTP	McCracken	001-1	03/31/2018	BOD, carbonaceous [5 day,	80082-1-0	Effluent Gross		NODI B		NODI B		lb/d								N
KY0083755	Timberland Subdivision WWTP	McCracken	001-1	03/31/2018	BOD, carbonaceous [5 day,	80082-1-0	Effluent Gross									NODI B		NODI B		mg/L	N
KY0083755	Timberland Subdivision WWTP	McCracken	001-1	02/28/2018	BOD, carbonaceous [5 day,	80082-1-0	Effluent Gross		NODI B		NODI B		lb/d								N
KY0083755	Timberland Subdivision WWTP	McCracken	001-1	02/28/2018	BOD, carbonaceous [5 day,	80082-1-0	Effluent Gross									NODI B		NODI B		mg/L	N
KY0083755	Timberland Subdivision WWTP	McCracken	001-1	01/31/2018	BOD, carbonaceous [5 day,	80082-1-0	Effluent Gross		NODI B		NODI B		lb/d								N
KY0083755	Timberland Subdivision WWTP	McCracken	001-1	01/31/2018	BOD, carbonaceous [5 day,	80082-1-0	Effluent Gross									NODI B		NODI B		mg/L	N
KY0083755	Timberland Subdivision WWTP	McCracken	001-1	12/31/2017	BOD, carbonaceous [5 day,	80082-1-0	Effluent Gross		NODI B		NODI B		lb/d								N
KY0083755	Timberland Subdivision WWTP	McCracken	001-1	12/31/2017	BOD, carbonaceous [5 day,	80082-1-0	Effluent Gross									NODI B		NODI B		mg/L	N
KY0083755	Timberland Subdivision WWTP	McCracken	001-1	11/30/2017	BOD, carbonaceous [5 day,	80082-1-0	Effluent Gross		NODI B		NODI B		lb/d								N
KY0083755	Timberland Subdivision WWTP	McCracken	001-1	11/30/2017	BOD, carbonaceous [5 day,	80082-1-0	Effluent Gross									NODI B		NODI B		mg/L	N
KY0083755	Timberland Subdivision WWTP	McCracken	001-1	10/31/2017	BOD, carbonaceous [5 day,	80082-1-0	Effluent Gross		NODI B		NODI B		lb/d								N
KY0083755	Timberland Subdivision WWTP	McCracken	001-1	10/31/2017	BOD, carbonaceous [5 day,	80082-1-0	Effluent Gross									NODI B		NODI B		mg/L	N
KY0083755	Timberland Subdivision WWTP	McCracken	001-1	09/30/2017	BOD, carbonaceous [5 day,	80082-1-0	Effluent Gross		NODI B		NODI B		lb/d								N
KY0083755	Timberland Subdivision WWTP	McCracken	001-1	09/30/2017	BOD, carbonaceous [5 day,	80082-1-0	Effluent Gross									NODI B		NODI B		mg/L	N
KY0083755	Timberland Subdivision WWTP	McCracken	001-1	08/31/2017	BOD, carbonaceous [5 day,	80082-1-0	Effluent Gross		.033	lb/d			lb/d								N
KY0083755	Timberland Subdivision WWTP	McCracken	001-1	08/31/2017	BOD, carbonaceous [5 day,	80082-1-0	Effluent Gross				.033	lb/d	lb/d								N
KY0083755	Timberland Subdivision WWTP	McCracken	001-1	08/31/2017	BOD, carbonaceous [5 day,	80082-1-0	Effluent Gross									2	mg/L			mg/L	N
KY0083755	Timberland Subdivision WWTP	McCracken	001-1	08/31/2017	BOD, carbonaceous [5 day,	80082-1-0	Effluent Gross											2	mg/L	mg/L	N
KY0083755	Timberland Subdivision WWTP	McCracken	001-1	07/31/2017	BOD, carbonaceous [5 day,	80082-1-0	Effluent Gross		NODI B		NODI B		lb/d								N
KY0083755	Timberland Subdivision WWTP	McCracken	001-1	07/31/2017	BOD, carbonaceous [5 day,	80082-1-0	Effluent Gross									NODI B		NODI B		mg/L	N
KY0083755	Timberland Subdivision WWTP	McCracken	001-1	06/30/2017	BOD, carbonaceous [5 day,	80082-1-0	Effluent Gross		.033	lb/d			lb/d								N

KY0083755	Timberland Subdivision WWTP	McCracken	001-1	06/30/2017	BOD, carbonaceous [5 day,	80082-1-0	Effluent Gross				.033	lb/d	lb/d						N
KY0083755	Timberland Subdivision WWTP	McCracken	001-1	06/30/2017	BOD, carbonaceous [5 day,	80082-1-0	Effluent Gross									2	mg/L			mg/L	N
KY0083755	Timberland Subdivision WWTP	McCracken	001-1	06/30/2017	BOD, carbonaceous [5 day,	80082-1-0	Effluent Gross											2	mg/L	mg/L	N
KY0083755	Timberland Subdivision WWTP	McCracken	001-1	05/31/2017	BOD, carbonaceous [5 day,	80082-1-0	Effluent Gross		NODI B		NODI B		lb/d								N
KY0083755	Timberland Subdivision WWTP	McCracken	001-1	05/31/2017	BOD, carbonaceous [5 day,	80082-1-0	Effluent Gross									NODI B		NODI B		mg/L	N
KY0083755	Timberland Subdivision WWTP	McCracken	001-1	04/30/2017	BOD, carbonaceous [5 day,	80082-1-0	Effluent Gross		NODI B		NODI B		lb/d								N
KY0083755	Timberland Subdivision WWTP	McCracken	001-1	04/30/2017	BOD, carbonaceous [5 day,	80082-1-0	Effluent Gross									NODI B		NODI B		mg/L	N
KY0083755	Timberland Subdivision WWTP	McCracken	001-1	03/31/2017	BOD, carbonaceous [5 day,	80082-1-0	Effluent Gross		NODI B		NODI B		lb/d								N
KY0083755	Timberland Subdivision WWTP	McCracken	001-1	03/31/2017	BOD, carbonaceous [5 day,	80082-1-0	Effluent Gross									NODI B		NODI B		mg/L	N
KY0083755	Timberland Subdivision WWTP	McCracken	001-1	02/28/2017	BOD, carbonaceous [5 day,	80082-1-0	Effluent Gross		NODI B		NODI B		lb/d								N
KY0083755	Timberland Subdivision WWTP	McCracken	001-1	02/28/2017	BOD, carbonaceous [5 day,	80082-1-0	Effluent Gross									NODI B		NODI B		mg/L	N
KY0083755	Timberland Subdivision WWTP	McCracken	001-1	01/31/2017	BOD, carbonaceous [5 day,	80082-1-0	Effluent Gross		NODI B		NODI B		lb/d								N
KY0083755	Timberland Subdivision WWTP	McCracken	001-1	01/31/2017	BOD, carbonaceous [5 day,	80082-1-0	Effluent Gross									NODI B		NODI B		mg/L	N
KY0083755	Timberland Subdivision WWTP	McCracken	001-1	12/31/2016	BOD, carbonaceous [5 day,	80082-1-0	Effluent Gross		NODI B		NODI B		lb/d								N
KY0083755	Timberland Subdivision WWTP	McCracken	001-1	12/31/2016	BOD, carbonaceous [5 day,	80082-1-0	Effluent Gross									NODI B		NODI B		mg/L	N
KY0083755	Timberland Subdivision WWTP	McCracken	001-1	11/30/2016	BOD, carbonaceous [5 day,	80082-1-0	Effluent Gross		NODI B		NODI B		lb/d								N
KY0083755	Timberland Subdivision WWTP	McCracken	001-1	11/30/2016	BOD, carbonaceous [5 day,	80082-1-0	Effluent Gross									NODI B		NODI B		mg/L	N
KY0083755	Timberland Subdivision WWTP	McCracken	001-1	10/31/2016	BOD, carbonaceous [5 day,	80082-1-0	Effluent Gross		NODI B		NODI B		lb/d								N
KY0083755	Timberland Subdivision WWTP	McCracken	001-1	10/31/2016	BOD, carbonaceous [5 day,	80082-1-0	Effluent Gross									NODI B		NODI B		mg/L	N
KY0083755	Timberland Subdivision WWTP	McCracken	001-1	09/30/2016	BOD, carbonaceous [5 day,	80082-1-0	Effluent Gross		NODI B		NODI B		lb/d								N
KY0083755	Timberland Subdivision WWTP	McCracken	001-1	09/30/2016	BOD, carbonaceous [5 day,	80082-1-0	Effluent Gross									NODI B		NODI B		mg/L	N
KY0083755	Timberland Subdivision WWTP	McCracken	001-1	08/31/2016	BOD, carbonaceous [5 day,	80082-1-0	Effluent Gross		NODI B		NODI B		lb/d								N
KY0083755	Timberland Subdivision WWTP	McCracken	001-1	08/31/2016	BOD, carbonaceous [5 day,	80082-1-0	Effluent Gross									NODI B		NODI B		mg/L	N
KY0083755	Timberland Subdivision WWTP	McCracken	001-1	07/31/2016	BOD, carbonaceous [5 day,	80082-1-0	Effluent Gross		NODI B		NODI B		lb/d								N
KY0083755	Timberland Subdivision WWTP	McCracken	001-1	07/31/2016	BOD, carbonaceous [5 day,	80082-1-0	Effluent Gross									NODI B		NODI B		mg/L	N
KY0083755	Timberland Subdivision WWTP	McCracken	001-1	06/30/2016	BOD, carbonaceous [5 day,	80082-1-0	Effluent Gross		.07	lb/d			lb/d								N
KY0083755	Timberland Subdivision WWTP	McCracken	001-1	06/30/2016	BOD, carbonaceous [5 day,	80082-1-0	Effluent Gross				.07	lb/d	lb/d								N
KY0083755	Timberland Subdivision WWTP	McCracken	001-1	06/30/2016	BOD, carbonaceous [5 day,	80082-1-0	Effluent Gross									4	mg/L			mg/L	N
KY0083755	Timberland Subdivision WWTP	McCracken	001-1	06/30/2016	BOD, carbonaceous [5 day,	80082-1-0	Effluent Gross											4	mg/L	mg/L	N
KY0083755	Timberland Subdivision WWTP	McCracken	001-1	05/31/2016	BOD, carbonaceous [5 day,	80082-1-0	Effluent Gross		NODI B		NODI B		lb/d								N
KY0083755	Timberland Subdivision WWTP	McCracken	001-1	05/31/2016	BOD, carbonaceous [5 day,	80082-1-0	Effluent Gross									NODI B		NODI B		mg/L	N
KY0083755	Timberland Subdivision WWTP	McCracken	001-1	04/30/2016	BOD, carbonaceous [5 day,	80082-1-0	Effluent Gross		NODI B		NODI B		lb/d								N
KY0083755	Timberland Subdivision WWTP	McCracken	001-1	04/30/2016	BOD, carbonaceous [5 day,	80082-1-0	Effluent Gross									NODI B		NODI B		mg/L	N
KY0083755	Timberland Subdivision WWTP	McCracken	001-1	03/31/2016	BOD, carbonaceous [5 day,	80082-1-0	Effluent Gross		NODI B		NODI B		lb/d								N
KY0083755	Timberland Subdivision WWTP	McCracken	001-1	03/31/2016	BOD, carbonaceous [5 day,	80082-1-0	Effluent Gross									NODI B		NODI B		mg/L	N
KY0083755	Timberland Subdivision WWTP	McCracken	001-1	02/29/2016	BOD, carbonaceous [5 day,	80082-1-0	Effluent Gross		NODI B		NODI B		lb/d								N
KY0083755	Timberland Subdivision WWTP	McCracken	001-1	02/29/2016	BOD, carbonaceous [5 day,	80082-1-0	Effluent Gross									NODI B		NODI B		mg/L	N

Non-Receipt Vio. Exists	DMR Received Date
N	3/22/2021
N	2/20/2021
N	1/24/2021
N	12/23/2020
N	11/25/2020
N	10/24/2020
N	9/25/2020
N	8/24/2020
N	7/21/2020
N	6/26/2020
N	5/23/2020
N	4/19/2020
N	3/28/2020
N	2/16/2020
N	1/13/2020
N	12/25/2019
N	11/2/2019
N	10/19/2019
N	9/15/2019
N	8/25/2019
N	7/22/2019
N	6/15/2019
N	5/16/2019
N	4/25/2019
N	3/14/2019
N	2/13/2019
N	1/15/2019
N	12/16/2018
N	11/20/2018
N	10/5/2018
N	9/15/2018
N	8/11/2018
N	7/17/2018
N	6/14/2018
N	5/21/2018
N	4/20/2018
N	3/24/2018
N	2/17/2018
N	1/13/2018
N	12/20/2017
N	11/14/2017
N	10/8/2017
N	9/18/2017
N	8/12/2017
N	7/24/2017
N	6/26/2017
N	5/12/2017
N	4/23/2017
N	3/11/2017
N	2/18/2017
N	1/17/2017
N	12/25/2016
N	11/13/2016
N	10/23/2016
N	9/24/2016
N	8/20/2016
N	7/26/2016
N	6/25/2016
N	5/20/2016
N	5/20/2016
Y	5/20/2016
N	3/22/2021
N	3/22/2021
N	2/20/2021
N	2/20/2021
N	1/24/2021
N	1/24/2021
N	12/23/2020
N	12/23/2020
N	11/25/2020
N	11/25/2020
N	10/24/2020
N	10/24/2020
N	9/25/2020
N	9/25/2020
N	8/24/2020
N	8/24/2020
N	7/21/2020
N	7/21/2020
N	6/26/2020
N	6/26/2020
N	5/23/2020
N	5/23/2020
N	4/19/2020
N	4/19/2020
N	3/28/2020

N	3/28/2020
N	2/16/2020
N	2/16/2020
N	1/13/2020
N	1/13/2020
N	12/25/2019
N	12/25/2019
N	11/2/2019
N	11/2/2019
N	10/19/2019
N	10/19/2019
N	9/15/2019
N	9/15/2019
N	8/25/2019
N	8/25/2019
N	7/22/2019
N	7/22/2019
N	6/15/2019
N	6/15/2019
N	5/16/2019
N	5/16/2019
N	4/25/2019
N	4/25/2019
N	3/14/2019
N	3/14/2019
N	2/13/2019
N	2/13/2019
N	1/15/2019
N	1/15/2019
N	12/16/2018
N	12/16/2018
N	11/20/2018
N	11/20/2018
N	10/5/2018
N	10/5/2018
N	9/15/2018
N	9/15/2018
N	8/11/2018
N	8/11/2018
N	7/17/2018
N	7/17/2018
N	6/14/2018
N	6/14/2018
N	5/21/2018
N	5/21/2018
N	4/20/2018
N	4/20/2018
N	4/20/2018
N	3/24/2018
N	3/24/2018
N	2/17/2018
N	2/17/2018
N	1/13/2018
N	1/13/2018
N	12/20/2017
N	12/20/2017
N	11/14/2017
N	11/14/2017
N	10/8/2017
N	10/8/2017
N	9/18/2017
N	9/18/2017
N	8/12/2017
N	8/12/2017
N	7/24/2017
N	7/24/2017
N	6/26/2017
N	6/26/2017
N	5/12/2017
N	5/12/2017
N	4/23/2017
N	4/23/2017
N	3/11/2017
N	3/11/2017
N	2/18/2017
N	2/18/2017
N	1/17/2017
N	1/17/2017
N	12/25/2016
N	12/25/2016
N	11/13/2016
N	11/13/2016
N	10/23/2016
N	10/23/2016
N	9/24/2016
N	9/24/2016
N	8/20/2016
N	8/20/2016
N	7/26/2016
N	7/26/2016
N	6/25/2016

N	6/25/2016
N	5/20/2016
N	5/20/2016
N	5/20/2016
N	5/20/2016
Y	5/20/2016
Y	5/20/2016
N	3/22/2021
N	3/22/2021
N	2/20/2021
N	2/20/2021
N	1/24/2021
N	1/24/2021
N	12/23/2020
N	12/23/2020
N	11/25/2020
N	11/25/2020
N	10/24/2020
N	10/24/2020
N	9/25/2020
N	9/25/2020
N	8/24/2020
N	8/24/2020
N	7/21/2020
N	7/21/2020
N	6/26/2020
N	6/26/2020
N	5/23/2020
N	5/23/2020
N	4/19/2020
N	4/19/2020
N	3/28/2020
N	3/28/2020
N	2/16/2020
N	2/16/2020
N	2/16/2020
N	2/16/2020
N	1/13/2020
N	1/13/2020
N	1/13/2020
N	1/13/2020
N	12/25/2019
N	12/25/2019
N	12/25/2019
N	12/25/2019
N	11/2/2019
N	11/2/2019
N	11/2/2019
N	11/2/2019
N	11/2/2019
N	10/19/2019
N	10/19/2019
N	10/19/2019
N	10/19/2019
N	9/15/2019
N	9/15/2019
N	9/15/2019
N	9/15/2019
N	8/25/2019
N	8/25/2019
N	8/25/2019
N	8/25/2019
N	7/22/2019
N	7/22/2019
N	7/22/2019
N	7/22/2019
N	6/15/2019
N	6/15/2019
N	6/15/2019
N	6/15/2019
N	5/16/2019
N	5/16/2019
N	5/16/2019
N	5/16/2019
N	4/25/2019
N	4/25/2019
N	4/25/2019
N	4/25/2019
N	3/14/2019
N	3/14/2019
N	3/14/2019
N	3/14/2019
N	2/13/2019
N	2/13/2019
N	2/13/2019
N	2/13/2019
N	1/15/2019
N	1/15/2019
N	1/15/2019
N	1/15/2019
N	12/16/2018

N	12/16/2018
N	11/20/2018
N	11/20/2018
N	11/20/2018
N	11/20/2018
N	10/5/2018
N	10/5/2018
N	10/5/2018
N	10/5/2018
N	9/15/2018
N	9/15/2018
N	9/15/2018
N	9/15/2018
N	8/11/2018
N	8/11/2018
N	8/11/2018
N	8/11/2018
N	7/17/2018
N	7/17/2018
N	7/17/2018
N	7/17/2018
N	6/14/2018
N	6/14/2018
N	5/21/2018
N	5/21/2018
N	5/21/2018
N	5/21/2018
N	4/20/2018
N	4/20/2018
N	4/20/2018
N	4/20/2018
N	3/24/2018
N	3/24/2018
N	3/24/2018
N	3/24/2018
N	2/17/2018
N	2/17/2018
N	2/17/2018
N	2/17/2018
N	1/13/2018
N	1/13/2018
N	1/13/2018
N	1/13/2018
N	12/20/2017
N	12/20/2017
N	12/20/2017
N	12/20/2017
N	12/20/2017
N	12/20/2017
N	11/14/2017
N	11/14/2017
N	11/14/2017
N	11/14/2017
N	10/8/2017
N	10/8/2017
N	10/8/2017
N	10/8/2017
N	9/18/2017
N	9/18/2017
N	9/18/2017
N	9/18/2017
N	8/12/2017
N	8/12/2017
N	8/12/2017
N	8/12/2017
N	7/24/2017
N	7/24/2017
N	7/24/2017
N	7/24/2017
N	6/26/2017
N	6/26/2017
N	6/26/2017
N	6/26/2017
N	5/12/2017
N	5/12/2017
N	5/12/2017
N	5/12/2017
N	4/23/2017
N	4/23/2017
N	4/23/2017
N	4/23/2017
N	3/11/2017
N	3/11/2017
N	3/11/2017
N	3/11/2017
N	2/18/2017
N	2/18/2017
N	2/18/2017
N	2/18/2017
N	1/17/2017
N	1/17/2017
N	1/17/2017

N	1/17/2017
N	12/25/2016
N	12/25/2016
N	12/25/2016
N	12/25/2016
N	11/13/2016
N	11/13/2016
N	11/13/2016
N	11/13/2016
N	10/23/2016
N	10/23/2016
N	10/23/2016
N	10/23/2016
N	9/24/2016
N	9/24/2016
N	8/20/2016
N	8/20/2016
N	8/20/2016
N	8/20/2016
N	7/26/2016
N	7/26/2016
N	7/26/2016
N	7/26/2016
N	6/25/2016
N	6/25/2016
N	6/25/2016
N	6/25/2016
N	5/20/2016
N	5/20/2016
N	5/20/2016
N	5/20/2016
N	5/20/2016
N	5/20/2016
N	5/20/2016
N	5/20/2016
Y	5/20/2016
Y	5/20/2016
Y	5/20/2016
Y	5/20/2016
N	11/25/2020
N	11/25/2020
N	10/24/2020
N	10/24/2020
N	9/25/2020
N	9/25/2020
N	8/24/2020
N	8/24/2020
N	8/24/2020
N	7/21/2020
N	7/21/2020
N	6/26/2020
N	6/26/2020
N	11/2/2019
N	11/2/2019
N	11/2/2019
N	11/2/2019
N	10/19/2019
N	10/19/2019
N	10/19/2019
N	10/19/2019
N	9/15/2019
N	9/15/2019
N	8/25/2019
N	8/25/2019
N	8/25/2019
N	8/25/2019
N	7/22/2019
N	7/22/2019
N	6/15/2019
N	6/15/2019
N	6/15/2019
N	6/15/2019
N	11/20/2018
N	11/20/2018
N	11/20/2018
N	11/20/2018
N	10/5/2018
N	10/5/2018
N	10/5/2018
N	10/5/2018
N	9/15/2018
N	9/15/2018
N	9/15/2018
N	9/15/2018
N	8/11/2018
N	8/11/2018
N	8/11/2018
N	8/11/2018
N	7/17/2018
N	7/17/2018
N	7/17/2018

N	7/17/2018
N	6/14/2018
N	6/14/2018
N	6/14/2018
N	6/14/2018
N	11/14/2017
N	11/14/2017
N	11/14/2017
N	11/14/2017
N	10/8/2017
N	10/8/2017
N	10/8/2017
N	10/8/2017
N	9/18/2017
N	9/18/2017
N	9/18/2017
N	9/18/2017
N	8/12/2017
N	8/12/2017
N	8/12/2017
N	8/12/2017
N	7/24/2017
N	7/24/2017
N	7/24/2017
N	7/24/2017
N	6/26/2017
N	6/26/2017
N	6/26/2017
N	6/26/2017
N	11/13/2016
N	11/13/2016
N	11/13/2016
N	11/13/2016
N	10/23/2016
N	10/23/2016
N	10/23/2016
N	10/23/2016
N	9/24/2016
N	9/24/2016
N	9/24/2016
N	9/24/2016
N	8/20/2016
N	8/20/2016
N	8/20/2016
N	8/20/2016
N	7/26/2016
N	7/26/2016
N	7/26/2016
N	7/26/2016
N	7/26/2016
N	6/25/2016
N	6/25/2016
N	6/25/2016
N	6/25/2016
N	3/22/2021
N	3/22/2021
N	2/20/2021
N	2/20/2021
N	1/24/2021
N	1/24/2021
N	12/23/2020
N	12/23/2020
N	5/23/2020
N	4/19/2020
N	3/28/2020
N	2/16/2020
N	2/16/2020
N	1/13/2020
N	1/13/2020
N	12/25/2019
N	12/25/2019
N	12/25/2019
N	12/25/2019
N	5/16/2019
N	5/16/2019
N	5/16/2019
N	5/16/2019
N	4/25/2019
N	4/25/2019
N	4/25/2019
N	4/25/2019
N	3/14/2019
N	3/14/2019
N	3/14/2019
N	3/14/2019
N	2/13/2019
N	2/13/2019
N	2/13/2019
N	2/13/2019
N	1/15/2019
N	1/15/2019

N	1/15/2019
N	1/15/2019
N	12/16/2018
N	12/16/2018
N	12/16/2018
N	12/16/2018
N	5/21/2018
N	5/21/2018
N	5/21/2018
N	5/21/2018
N	4/20/2018
N	4/20/2018
N	4/20/2018
N	4/20/2018
N	3/24/2018
N	3/24/2018
N	3/24/2018
N	3/24/2018
N	2/17/2018
N	2/17/2018
N	2/17/2018
N	2/17/2018
N	1/13/2018
N	1/13/2018
N	1/13/2018
N	1/13/2018
N	12/20/2017
N	12/20/2017
N	12/20/2017
N	12/20/2017
N	5/12/2017
N	5/12/2017
N	5/12/2017
N	5/12/2017
N	4/23/2017
N	4/23/2017
N	4/23/2017
N	4/23/2017
N	3/11/2017
N	3/11/2017
N	3/11/2017
N	3/11/2017
N	2/18/2017
N	2/18/2017
N	2/18/2017
N	2/18/2017
N	2/18/2017
N	1/17/2017
N	1/17/2017
N	1/17/2017
N	1/17/2017
N	12/25/2016
N	12/25/2016
N	12/25/2016
N	12/25/2016
N	5/20/2016
N	5/20/2016
N	5/20/2016
N	5/20/2016
N	5/20/2016
N	5/20/2016
N	5/20/2016
Y	5/20/2016
Y	5/20/2016
Y	5/20/2016
Y	5/20/2016
N	3/22/2021
N	3/22/2021
N	2/20/2021
N	2/20/2021
N	1/24/2021
N	1/24/2021
N	12/23/2020
N	12/23/2020
N	11/25/2020
N	11/25/2020
N	10/24/2020
N	10/24/2020
N	9/25/2020
N	9/25/2020
N	8/24/2020
N	8/24/2020
N	7/21/2020
N	7/21/2020
N	6/26/2020
N	6/26/2020
N	5/23/2020
N	5/23/2020
N	4/19/2020
N	4/19/2020

N	3/28/2020
N	3/28/2020
N	2/16/2020
N	2/16/2020
N	1/13/2020
N	12/25/2019
N	12/25/2019
N	11/2/2019
N	11/2/2019
N	10/19/2019
N	10/19/2019
N	9/15/2019
N	9/15/2019
N	8/25/2019
N	8/25/2019
N	7/22/2019
N	7/22/2019
N	6/15/2019
N	6/15/2019
N	5/16/2019
N	5/16/2019
N	4/25/2019
N	4/25/2019
N	3/14/2019
N	3/14/2019
N	2/13/2019
N	2/13/2019
N	1/15/2019
N	1/15/2019
N	12/16/2018
N	12/16/2018
N	11/20/2018
N	11/20/2018
N	10/5/2018
N	10/5/2018
N	9/15/2018
N	9/15/2018
N	8/11/2018
N	8/11/2018
N	7/17/2018
N	7/17/2018
N	6/14/2018
N	6/14/2018
N	5/21/2018
N	5/21/2018
N	4/20/2018
N	4/20/2018
N	4/20/2018
N	3/24/2018
N	3/24/2018
N	2/17/2018
N	2/17/2018
N	1/13/2018
N	1/13/2018
N	12/20/2017
N	12/20/2017
N	11/14/2017
N	11/14/2017
N	10/8/2017
N	10/8/2017
N	9/18/2017
N	9/18/2017
N	8/12/2017
N	8/12/2017
N	7/24/2017
N	7/24/2017
N	6/26/2017
N	6/26/2017
N	5/12/2017
N	5/12/2017
N	4/23/2017
N	4/23/2017
N	3/11/2017
N	3/11/2017
N	2/18/2017
N	2/18/2017
N	1/17/2017
N	1/17/2017
N	12/25/2016
N	12/25/2016
N	11/13/2016
N	11/13/2016
N	10/23/2016
N	10/23/2016
N	9/24/2016
N	9/24/2016
N	8/20/2016
N	8/20/2016
N	7/26/2016
N	7/26/2016
N	6/25/2016

N	6/25/2016
N	5/20/2016
N	5/20/2016
N	5/20/2016
N	5/20/2016
Y	5/20/2016
Y	5/20/2016
N	3/22/2021
N	3/22/2021
N	2/20/2021
N	2/20/2021
N	1/24/2021
N	1/24/2021
N	12/23/2020
N	12/23/2020
N	11/25/2020
N	11/25/2020
N	10/24/2020
N	9/25/2020
N	9/25/2020
N	8/24/2020
N	8/24/2020
N	7/21/2020
N	7/21/2020
N	6/26/2020
N	6/26/2020
N	5/23/2020
N	4/19/2020
N	3/28/2020
N	2/16/2020
N	1/13/2020
N	12/25/2019
N	11/2/2019
N	10/19/2019
N	9/15/2019
N	8/25/2019
N	7/22/2019
N	6/15/2019
N	5/16/2019
N	4/25/2019
N	3/14/2019
N	2/13/2019
N	1/15/2019
N	12/16/2018
N	11/20/2018
N	10/5/2018
N	9/15/2018
N	8/11/2018
N	7/17/2018
N	6/14/2018
N	5/21/2018
N	4/20/2018
N	3/24/2018
N	2/17/2018
N	1/13/2018
N	12/20/2017
N	11/14/2017
N	10/8/2017
N	9/18/2017
N	8/12/2017
N	7/24/2017
N	6/26/2017
N	5/12/2017
N	4/23/2017
N	3/11/2017
N	2/18/2017
N	1/17/2017
N	12/25/2016
N	11/13/2016
N	10/23/2016
N	9/24/2016
N	8/20/2016
N	7/26/2016
N	6/25/2016
N	5/20/2016
N	5/20/2016
Y	5/20/2016
N	3/22/2021
N	3/22/2021
N	2/20/2021
N	2/20/2021
N	1/24/2021
N	1/24/2021
N	12/23/2020
N	12/23/2020
N	11/25/2020
N	11/25/2020
N	10/24/2020
N	10/24/2020
N	9/25/2020

N	9/25/2020
N	8/24/2020
N	8/24/2020
N	7/21/2020
N	7/21/2020
N	6/26/2020
N	6/26/2020
N	5/23/2020
N	4/19/2020
N	3/28/2020
N	2/16/2020
N	1/13/2020
N	12/25/2019
N	11/2/2019
N	10/19/2019
N	9/15/2019
N	8/25/2019
N	8/25/2019
N	7/22/2019
N	7/22/2019
N	6/15/2019
N	5/16/2019
N	4/25/2019
N	3/14/2019
N	3/14/2019
N	2/13/2019
N	1/15/2019
N	12/16/2018
N	11/20/2018
N	10/5/2018
N	9/15/2018
N	9/15/2018
N	8/11/2018
N	7/17/2018
N	6/14/2018
N	6/14/2018
N	5/21/2018
N	5/21/2018
N	4/20/2018
N	3/24/2018
N	2/17/2018
N	1/13/2018
N	1/13/2018
N	12/20/2017
N	11/14/2017
N	10/8/2017
N	9/18/2017
N	9/18/2017
N	8/12/2017
N	7/24/2017
N	6/26/2017
N	5/12/2017
N	4/23/2017
N	3/11/2017
N	2/18/2017
N	1/17/2017
N	1/17/2017
N	12/25/2016
N	11/13/2016
N	10/23/2016
N	9/24/2016
N	8/20/2016
N	7/26/2016
N	7/26/2016
N	6/25/2016
N	5/20/2016
N	5/20/2016
Y	5/20/2016
Y	5/20/2016
N	3/22/2021
N	3/22/2021
N	2/20/2021
N	2/20/2021
N	1/24/2021
N	1/24/2021
N	12/23/2020
N	12/23/2020
N	11/25/2020
N	11/25/2020
N	10/24/2020
N	10/24/2020
N	9/25/2020
N	9/25/2020
N	8/24/2020
N	8/24/2020
N	7/21/2020
N	7/21/2020
N	6/26/2020
N	6/26/2020
N	5/23/2020

N	5/23/2020
N	4/19/2020
N	4/19/2020
N	3/28/2020
N	3/28/2020
N	2/16/2020
N	2/16/2020
N	2/16/2020
N	2/16/2020
N	1/13/2020
N	1/13/2020
N	12/25/2019
N	12/25/2019
N	11/2/2019
N	11/2/2019
N	10/19/2019
N	10/19/2019
N	10/19/2019
N	10/19/2019
N	9/15/2019
N	9/15/2019
N	9/15/2019
N	9/15/2019
N	8/25/2019
N	8/25/2019
N	8/25/2019
N	8/25/2019
N	7/22/2019
N	7/22/2019
N	7/22/2019
N	7/22/2019
N	6/15/2019
N	6/15/2019
N	6/15/2019
N	6/15/2019
N	5/16/2019
N	5/16/2019
N	4/25/2019
N	4/25/2019
N	4/25/2019
N	4/25/2019
N	3/14/2019
N	3/14/2019
N	2/13/2019
N	2/13/2019
N	1/15/2019
N	1/15/2019
N	1/15/2019
N	12/16/2018
N	12/16/2018
N	11/20/2018
N	11/20/2018
N	10/5/2018
N	10/5/2018
N	9/15/2018
N	9/15/2018
N	9/15/2018
N	9/15/2018
N	8/11/2018
N	8/11/2018
N	8/11/2018
N	8/11/2018
N	7/17/2018
N	7/17/2018
N	7/17/2018
N	7/17/2018
N	6/14/2018
N	6/14/2018
N	5/21/2018
N	5/21/2018
N	4/20/2018
N	4/20/2018
N	3/24/2018
N	3/24/2018
N	2/17/2018
N	2/17/2018
N	1/13/2018
N	1/13/2018
N	12/20/2017
N	12/20/2017
N	11/14/2017
N	11/14/2017
N	10/8/2017
N	10/8/2017
N	9/18/2017
N	9/18/2017
N	9/18/2017
N	9/18/2017
N	8/12/2017
N	8/12/2017
N	7/24/2017

N	7/24/2017
N	7/24/2017
N	7/24/2017
N	6/26/2017
N	6/26/2017
N	5/12/2017
N	5/12/2017
N	4/23/2017
N	4/23/2017
N	3/11/2017
N	3/11/2017
N	2/18/2017
N	2/18/2017
N	1/17/2017
N	1/17/2017
N	12/25/2016
N	12/25/2016
N	11/13/2016
N	11/13/2016
N	10/23/2016
N	10/23/2016
N	9/24/2016
N	9/24/2016
N	8/20/2016
N	8/20/2016
N	7/26/2016
N	7/26/2016
N	7/26/2016
N	7/26/2016
N	6/25/2016
N	6/25/2016
N	5/20/2016
N	5/20/2016
N	5/20/2016
N	5/20/2016
Y	5/20/2016
Y	5/20/2016

BAR IS ONE INCH ON OFFICIAL DRAWINGS. 0 1" IF NOT ONE INCH, ADJUST SCALE ACCORDINGLY.

BROCKLYN WWTF
IN
MADISON COUNTY, KENTUCKY

PERMIT ISSUE: _____, 2020
CONSTRUCTION ISSUE: _____, 2020
RECORD ISSUE: _____, 2020

21 DESIGN GROUP INC.
ENGINEERING & SURVEYING
1351 Jefferson, Suite 301
Washington, MO 63090
mail@21designgroup.net
P: 636-432-5029

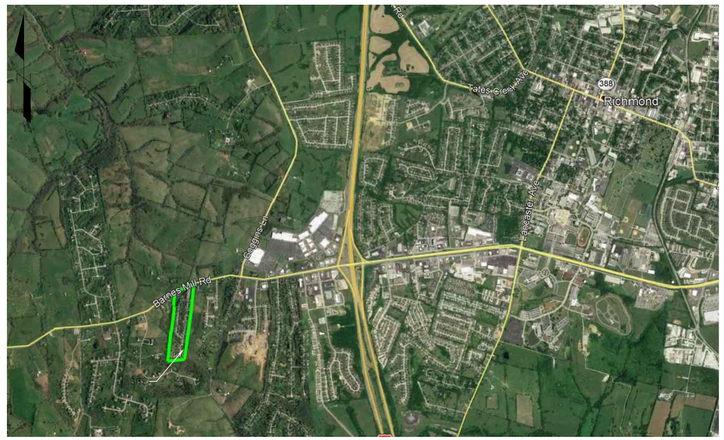

VICINITY MAP

DRAWING LIST

C01 TITLE
C02 NOTES
C03 EXISTING CONDITIONS / DEMOLITION PLAN
C04 SITE / UTILITY PLAN
C05 GRADING PLAN
C06 DETAILS
P1 HYDRAULIC PROFILE
P2 PROCESS FLOW DIAGRAM
P3 PROCESS NOTES, ABBREVIATIONS AND LEGEND
P4 PROCESS UPPER PLAN (ABOVE EL.901.00)
P5 PROCESS LOWER PLAN (BELOW EL.901.00)
~~P6 PROCESS SECTIONS~~
~~P7 PROCESS SECTIONS~~
P8 PROCESS SECTIONS AND DETAILS
~~P9 CONTACT TANK/ POST AERATION AND INFLUENT PUMP STATION/ PRE-EQUALIZATION PLAN & SECTIONS~~

#	DATE	REVISION	BY
A	7/30/2020	PERMIT SET	

21 DESIGN GROUP INC.
1351 Jefferson, Suite 301
Washington, MO 63090
mail@21designgroup.net
P: 636-432-5029

COVER SHEET

BROCKLYN WWTF
HAGER DRIVE
RICHMOND, KY

ENGINEERING CERTIFICATE OF AUTHORITY NO. 4804
ENGINEERING LICENSE:
BENJAMIN J. KUENZEL, PE33718

SEAL DATE:	07/30/2020
DRAWN BY:	BJK
PROJ NUMBER:	18-0475
DATE:	07/30/2020
DRAWING NO:	C01

ALL RIGHTS RESERVED. All "21 Design Group, Inc." plans, specifications and drawings are protected under copyright law and no part may be copied, reproduced, displayed publicly, used to create derivatives, distributed, stored in a retrieval system or transmitted in any form by any means without prior written permission of "21 Design Group, Inc."

BAR IS ONE INCH ON OFFICIAL DRAWINGS. 0 1" IF NOT ONE INCH, ADJUST SCALE ACCORDINGLY.

General Notes and Construction Specifications

1. All water and sewer main construction shall be consistent with the local municipality requirements as well as all testing and disinfection requirements of Kentucky DEP.

2. The contractor shall obtain, erect, maintain and remove all signs, barricades, flagmen and other control devices as may be necessary for the purpose of regulating, warning or guiding traffic. Placement and maintenance of all traffic control devices shall be in accordance with the latest revision of the Manual on Uniform Traffic Control Devices.

3. Location of utilities shown on plans are approximate only, and are not necessarily complete. Contractor shall make his own investigations as to location of all existing underground structures, cables, utilities and pipe lines.

4. If existing utility lines of any nature are encountered which conflict in location with new construction, the contractor shall notify the engineer and owner so that the conflict may be resolved.

5. 5. The contractor shall notify One Call at least 48 hours prior to construction so that each utility company can stake out any underground improvements that they may have which might interfere with the proposed construction.

6. The contractor shall be required to make arrangements for the proper bracing, shoring and other required protection of all roadways, structures, poles, cables and pipe lines, before construction begins. He shall be responsible for any damage to the streets or roadways and associated structures and shall make repairs as necessary to the satisfaction of the engineer and owner at his own expense.

7. The contractor shall be responsible for the protection of all private and public utilities even though they may not be shown on the plans. Any utility that is damaged during construction shall be repaired or replaced to the satisfaction of the engineer and owner by the contractor at his own expense.

8. The contractor shall examine the plans and specifications, visit the site of the work and inform himself/herself fully with the work involved, general and local conditions, all federal, state and local laws, ordinances, rules and regulations and all other pertinent items which may affect the cost and time of completion of this project before submitting a proposal.

9. All work and materials shall be in accordance with code requirements.

10. Prior to submitting his bid, the contractor shall call the attention of the engineer to any material or equipment he deems inadequate and to any item of work omitted on the plans.

11. Structures for valve vaults for water mains shall be in accordance with the improvement plans and the applicable municipality construction requirements. Where granular trench backfill is required around these structures, the cost shall be considered as incidental and shall be included in the contract unit price for the structure.

12. Frame and cover or grates for water main structures shall be as indicated within these improvement plans.

13. All final adjustments of casting will be accomplished by the use of precast concrete adjusting rings set in butyl rope joint sealant, mortar joints will not be allowed. Total height of adjusting rings used shall not exceed twelve (12") inches. cost for adjustment is considered incidental.

14. The contractor shall be responsible to place on grade and coordinate with other contractors all underground structure frames such as catch basins, inlets, manholes, hydrants, buffalo boxes, valves, etc. No additional compensation shall be paid and said adjustments shall be considered incidental to other items of construction.

15. The contractor shall restore any area disturbed to a condition equal to or better than its original use. This shall include finish grading, establishment of a vegetative cover (seeding or sod), general cleanup and pavement replacement.

16. All trenches caused by the construction of all utilities and the excavation around catch basins, manholes, inlets and other appurtenances which occur within the limits of existing or proposed pavements, sidewalks and curb and gutters or where the edge of the trench shall be within two (2') feet horizontally of said improvements shall be backfilled with compacted granular trench backfill or with approved suitable select material and properly compacted to 100% of maximum density as determined by the standard proctor dry density (ASTM d 698) compaction test. When granular material is required, the cost shall be considered incidental and shall be included in the contractors bid.

17. The depth of backfill shall be measured from the top of the pipe embedment to the finished subgrade or as noted on the plans.

18. The contractor shall be responsible for providing safe and healthful working conditions throughout the construction of the proposed improvements.

19. The engineer will be given forty-eight (48) hours notice for any staking that is to be done. The cost of stakeout is the responsibility of the contractor.

20. The contractor shall inform the engineer and owner before work commences on each category of construction, i.e. water main, grading, pavement and drainage improvement. A twenty-four (24) hour notice shall be given for any item that requires final testing and inspection such as water mains or sanitary sewers.

21. The engineer will furnish the contractor with lines and grades necessary to the proper prosecution and control of the work. The contractor shall call the attention of the engineer to any errors or discrepancies which may be suspected in lines and grades which are established by the engineer, and shall not proceed with the work until any lines and grades which are believed to be in error have been verified or corrected by the engineer or his representative.

22. All survey monuments damaged or removed during construction of this project shall be replaced by the surveyor and said cost of replacement shall be paid by the contractor.

23. The contractor will have in his possession on the job site a copy of the plans and specifications during construction.

24. If approval for any items is required, the contractor shall contact the engineer for approval prior to ordering.

25. Any drain and/or field tile encountered by the contractor during the installation of the improvements shall be returned to original condition. This work to be considered incidental to the contract.

26. All road signs, street signs and traffic signs which need to be relocated or moved due to construction shall be taken down and stored by the contractor at his own expense, except those which are necessary for proper traffic control which shall be temporarily reset until completion of construction operations. After completion of the work, the contractor shall reset, at his expense, all said signs.

27. The contractor shall dispose of all excess excavation, unsuitable and unusable materials offsite and at an approved location in a manner that public or private property will not be damaged or endangered. This work is considered as incidental to the cost of the project. Contractor to follow any local, state, and federal guidelines for disposing of material off site.

28. No trench excavations will be permitted to remain open over any weekend, night, or any time site is left unattended.

29. Band-seal style couplings shall be used when joining sewer pipes of dissimilar materials.

30. As-built drawings shall be prepared by the contractor and submitted to the engineer as soon as the site improvements are completed. Any change in length, location or alignment shall be shown in red. As-builts will be performed by a licensed surveyor. It will include the tops and flowlines of all storm and sanitary structures.

31. The contractor is responsible for coordinating any required inspections with the engineer and city or state agency.

32. Special attention is drawn to the fact that the standard specifications requires the contractor to have a competent superintendent on the project site at all times, irrespective of the amount of work sublet. The superintendent shall be capable of reading and understanding the plans and municipality construction specifications, shall have full authority to execute orders to expedite the project, shall be responsible for scheduling and have control of all work as the agent of the contractor. Failure to comply with this provision will result in a suspension of work as provided in the contract documents.

33. The engineer and owner are not responsible for the construction means, methods, techniques, sequences or procedures, time of performance, programs or for any safety precautions used by the contractor. The contractor is solely responsible for execution of his work in accordance with the contract documents and specifications.

34. The utilities shown hereon were plotted from available information and do not necessarily reflect the actual existence, non-existence, size, type, or location of these or other utilities. The contractor shall be responsible for verifying the actual location of all utilities. All utilities shall be located in the field prior to any construction of improvements. These provisions shall in no way absolve any party from complying with the underground facility safety and damage prevention act.

35. All materials and methods of construction to meet the specifications submitted for the construction permit.

36. Construction should not commence until all permits have been received from all governing agencies.

37. No land disturbance activities can be completed until all land disturbance permitting has been acquired. It is the responsibility of the contractor to verify permits are in place prior to activities. Contractor will be responsible for any fines that are incurred due activities completed prior to having necessary permitting in place.

38. All fill material shall be made of selected earth materials, free from broken masonry, rock, frozen earth, rubbish, organic material and debris.

39. Grading contractor shall keep existing roadways clean of mud and debris at all times.If the city or owner has to clean the roads it will be at the expense of the contractor.

40. All graded areas shall be protected from erosion by erosion control devices and/or seeding and mulching as required by all local and state agencies and permits.

41. No grade shall exceed a 3:1 slope except where noted.

42. Interim stormwater drainage control in the form of siltation control measures are required.

43. Adequate temporary off-street parking shall be provided for construction employees. Parking on non-surfaced areas shall be prohibited in order to eliminate the condition whereby mud from construction and employee vehicles is tracked onto the pavement causing hazardous roadway and driving conditions.

44. The contractor shall, at all times, contain mud and other spoils on the site. No vehicle, trailer or construction equipment is to deposit mud or any other material on public streets. Project will be stopped if streets are not cleaned immediately.

45. Public roadways shall be kept open to traffic during all phases of construction of improvements. No driving lanes shall be closed without prior written permission from the governing agency.

46. The contractor shall furnish, maintain, and remove traffic control devices for the purpose of regulating, warning, and directing traffic during construction in the public roadways. All flagmen, barricades, warning signs, etc. shall conform to the manual for uniform traffic control devices.

47. No investigation has been performed by the engineer regarding hazardous waste, underground conditions or utilities affecting the tract of land shown herein.

48. This plan is not a survey in any sort and shall not constitute a boundary survey.

49. Onsite utilities have been shown based on documents obtained from public entities.

50. See MEP/Arch. plans for site lighting and electrical design/layout.

51. Contractor shall comply with all OSHA requirements for safety and construction.

52. All utility trenches in paved areas shall be compacted to the requirements of the specific paving specification. Only granular material shall be used in utility trenches under paved areas.

53. All unsurfaced areas shall receive a minimum of 6" of topsoil. Contractor shall seed, fertilize, mulch, and maintain all disturbed areas until stabilization is provided meeting the technical specifications and/or direction of the Engineer.

54. The contractor is responsible for maintenance of sediment control bmps throughout the entire project.

55. All sewer laterals shall have a 2% minimum slope.

56. All storm sewer covers shall have the words "Storm Drain" cast in the top in letters three inches high. All sanitary sewer covers shall have "Sanitary Sewer" meeting same specification.

57. All frames, grates and covers shall be ductile iron, conforming to ASTM A48, Class 30 and shall be designed for heavy duty traffic.

58. Manhole steps shall be constructed of polypropylene conforming to ASTM D 4101 and shall meet current state and federal safety standards. Steps shall be Neenah R-1981-N or approved equal.

59. Pre-cast manholes shall be at least 48" diameter and conform with ASTM C478 and to design dimensions. All lift hole shall be thoroughly wetted and completed filled with mortar and smoothed. Structures shall be free of fractures or cracks. All joints between pre-cast elements on manholes shall be made with an approved bitumastic material or an approved rubber gasket. Contractor shall submit shop drawings to engineer for approval prior to ordering.

60. All storm sewer 12" to 30" in diameter shall be Corrugated Polyethylene Pipe (CPP) or High Density Polypropolene (HDPP).
A. CPP pipe and fittings shall conform to ASTM F405 and F667 and shall have a circular cross-section and have a smooth wall interior.
B. End sections shall be polyethlyene flared type with toe plates.
C. Joints shall be provided with neoprene or manufacturer"s standard gaskets and meet ASTM F2881. Pipes up to shall be water tight according to D3212. Spigots shall have gaskets meeting the requirements of ASTM F477.
D. All CPP or HDPP shall be installed using embedment material meeting North Carolina Department of Transportation requirements.
E. Installation to conform to ASTM D2321 and pipe manufacturer's recommendations for backfill, bedding, installation, and minimum cover requirements.
F. Clean joints thoroughly, and coat bell, spigot and gasket with recommended lubricant before jointing.

61. Dual wall and triple wall polypropylene pipe (HDPP) shall confirm to the requirements of AASHTO M330 "Standard Specification for Polypropylene Pipe, ASTM F2736 (Dual wall) for sizes 12" to 30" and ASTM F2764 (Triple wall) for sizes 30" to 60". All polypropylene pipe shall be installed according with ASTM F2321 "Standard Practice for Underground Installation of Thermoplastic Pipe for Sewers and Other Gravity-Flow Applications.".

#	DATE	REVISION	BY
A	7/30/2020	PERMIT SET	

21 DESIGN GROUP INC.
1351 Jefferson, Suite 301
Washington, MO 63090
mail@21designgroup.net
P: 636-432-3029

GENERAL NOTES

BROCKLYN WWTF
HAGER DRIVE
RICHMOND, KY

ENGINEERING CERTIFICATE OF AUTHORITY NO. 4804
ENGINEERING LICENSE:
BENJAMIN J. KUENZEL, PE33718

STATE OF KENTUCKY
BENJAMIN J. KUENZEL
33718
LICENSED PROFESSIONAL ENGINEER

SEAL DATE:	07/30/2020
DRAWN BY:	BJK
PROJ NUMBER:	18-0475
DATE:	07/30/2020
DRAWING NO:	C02

ALL RIGHTS RESERVED. All "21 Design Group, Inc." plans, specifications and drawings are protected under copyright law and no part may be copied, reproduced, displayed publicly, used to create derivatives, distributed, stored in a retrieval system or transmitted in any form by any means without prior written permission of "21 Design Group, Inc."

BAR IS ONE INCH ON OFFICIAL DRAWINGS. 0 1" IF NOT ONE INCH, ADJUST SCALE ACCORDINGLY.

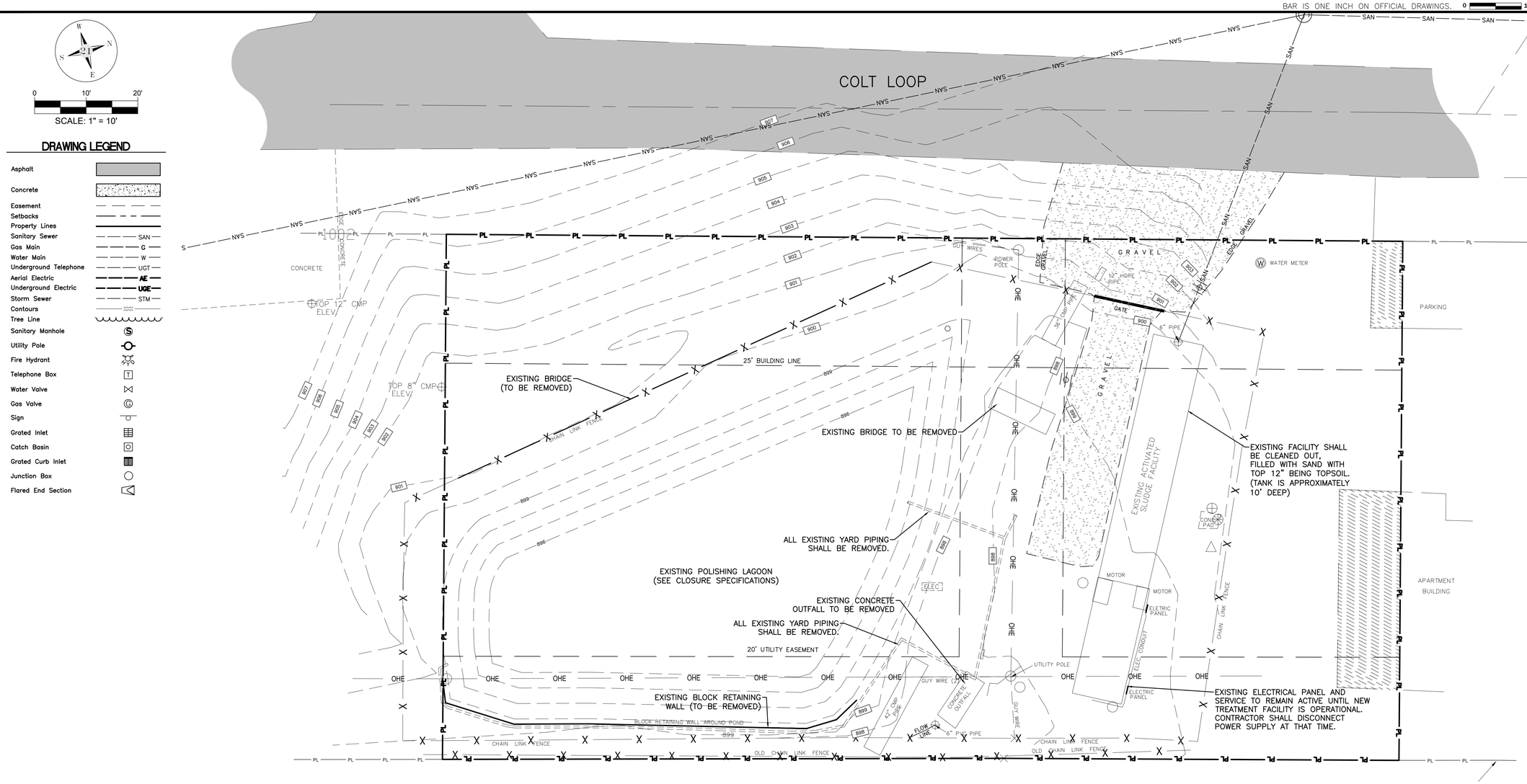

NOTE:

1. CONTRACTOR SHALL VISIT SITE PRIOR TO SUBMITTING BID TO EVALUATE SITE CONSTRAINTS. THIS SHALL INCLUDE BUT NOT LIMITED TO LOCATION OF POWER LINES IN RESPECT TO THE SITE.
2. AT ALL TIMES, INCOMING SEWAGE SHALL BE TREATED BY THE EXISTING FACILITY OR NEW FACILITY. AT NO POINT SHALL THE CONTRACTOR BYPASS TREATMENT AND ALLOW WASTEWATER TO DISCHARGE DIRECTLY INTO THE RECEIVING STREAM.

#	DATE	REVISION
A	7/30/2020	PERMIT SET
B		

21 DESIGN GROUP INC.
1351 Jefferson, Suite 301
Washington, MO 63090
mail@21designgroup.net
P: 636-432-3029

EXISTING CONDITIONS / DEMOLITION PLAN

BROCKLYN WWTF
HAGER DRIVE
RICHMOND, KY

ENGINEERING CERTIFICATE OF AUTHORITY NO. 4804
ENGINEERING LICENSE:
BENJAMIN J. KUENZEL, PE33718

STATE OF KENTUCKY
BENJAMIN J. KUENZEL
33718
LICENSED PROFESSIONAL ENGINEER

SEAL DATE:	07/30/2020
DRAWN BY:	BJK
PROJ NUMBER:	18-0475
DATE:	07/30/2020
DRAWING NO:	C03

ALL RIGHTS RESERVED. All "21 Design Group, Inc." plans, specifications and drawings are protected under copyright law and no part may be copied, reproduced, displayed publicly, used to create derivatives, distributed, stored in a retrieval system or transmitted in any form by any means without prior written permission of "21 Design Group, Inc."

BAR IS ONE INCH ON OFFICIAL DRAWINGS. 0 1" IF NOT ONE INCH, ADJUST SCALE ACCORDINGLY.

SCALE: 1" = 20'

DRAWING LEGEND

DESCRIPTION	EXISTING	PROPOSED
Easement		
Setbacks		
Property Lines		
Aerial Electric	AE	AE
Tree Line		
Sanitary Manhole	S	S
Utility Pole		
Fire Hydrant		
Telephone Box	T	T
Water Valve		
Gas Valve	G	G
Sign		
Grated Inlet		
Catch Basin		
Grated Curb Inlet		
Junction Box		
Flared End Section		

PAVEMENT LEGEND

Existing Asphalt	
Existing Concrete	
New Concrete	
New Standard Duty Asphalt	
New Heavy Duty Asphalt	
New Standard Duty Concrete	
New Heavy Duty Concrete	

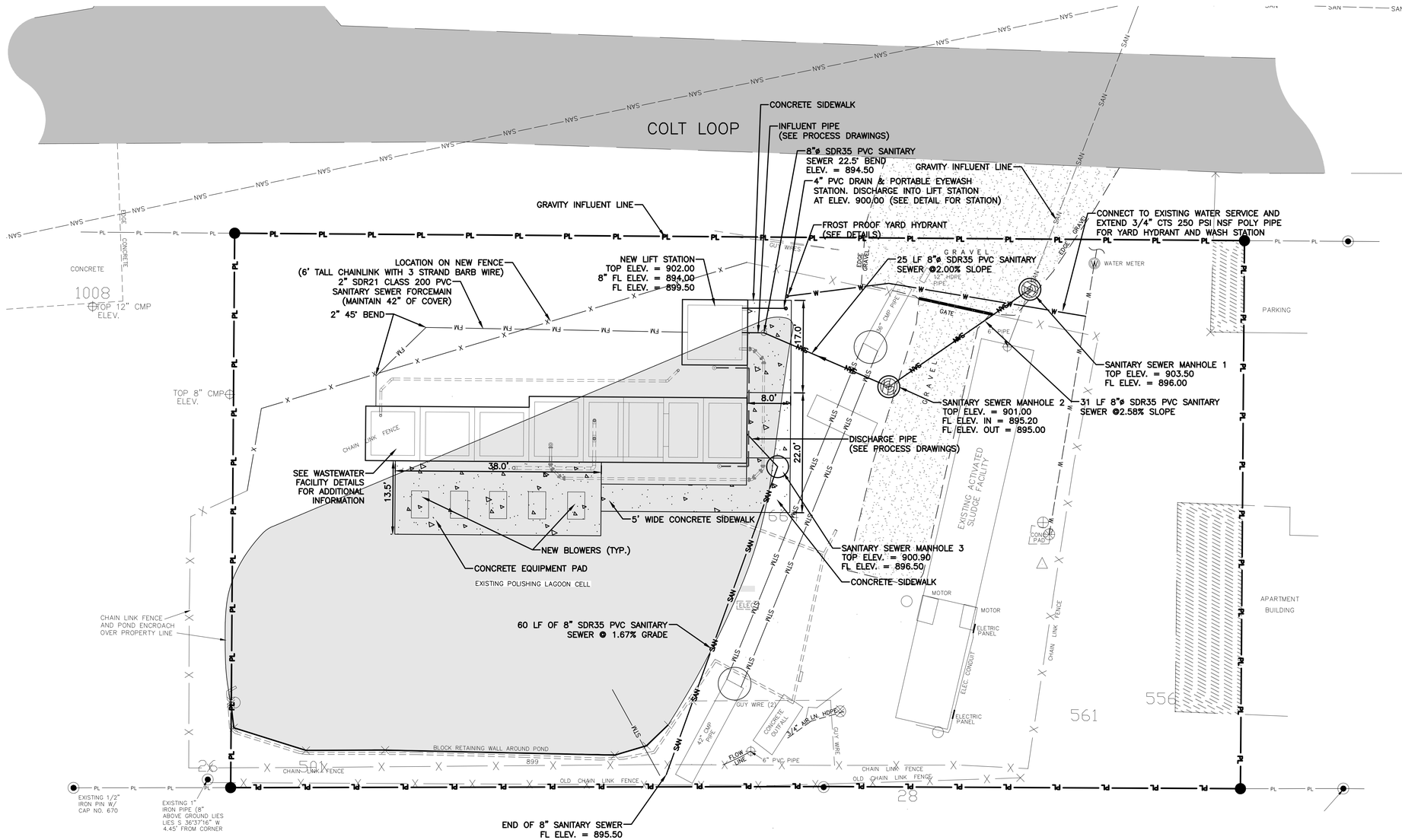

#	DATE	REVISION
A	7/30/2020	PERMIT SET

BY:

21 DESIGN GROUP INC.
1351 Jefferson, Suite 301
Washington, MO 63090
mail@21designgroup.net
P: 636-432-5029

SITE/UTILITY PLAN

BROCKLYN WWTF
HAGER DRIVE
RICHMOND, KY

ENGINEERING CERTIFICATE OF AUTHORITY NO. 4804
ENGINEERING LICENSEE: BENJAMIN J. KUENZEL, PE33718

SEAL DATE:	07/30/2020
DRAWN BY:	BJK
PROJ NUMBER:	18-0475
DATE:	07/30/2020
DRAWING NO:	C04

ALL RIGHTS RESERVED. All "21 Design Group, Inc." plans, specifications and drawings are protected under copyright law and no part may be copied, reproduced, displayed publicly, used to create derivatives, distributed, stored in a retrieval system or transmitted in any form by any means without prior written permission of "21 Design Group, Inc."

BAR IS ONE INCH ON OFFICIAL DRAWINGS. 0 1" IF NOT ONE INCH, ADJUST SCALE ACCORDINGLY.

0 20' 40'

SCALE: 1" = 20'

DRAWING LEGEND

DESCRIPTION	EXISTING	PROPOSED
Easement		
Setbacks		
Property Lines		
Aerial Electric	AE	AE
Tree Line		
Sanitary Manhole	Ⓢ	Ⓢ
Utility Pole		
Fire Hydrant		
Telephone Box	T	T
Water Valve		
Gas Valve	G	G
Sign		
Grated Inlet		
Catch Basin		
Grated Curb Inlet		
Junction Box		
Flared End Section		

PAVEMENT LEGEND

- Existing Asphalt
- Existing Concrete
- New Concrete
- New Standard Duty Asphalt
- New Heavy Duty Asphalt
- New Standard Duty Concrete
- New Heavy Duty Concrete

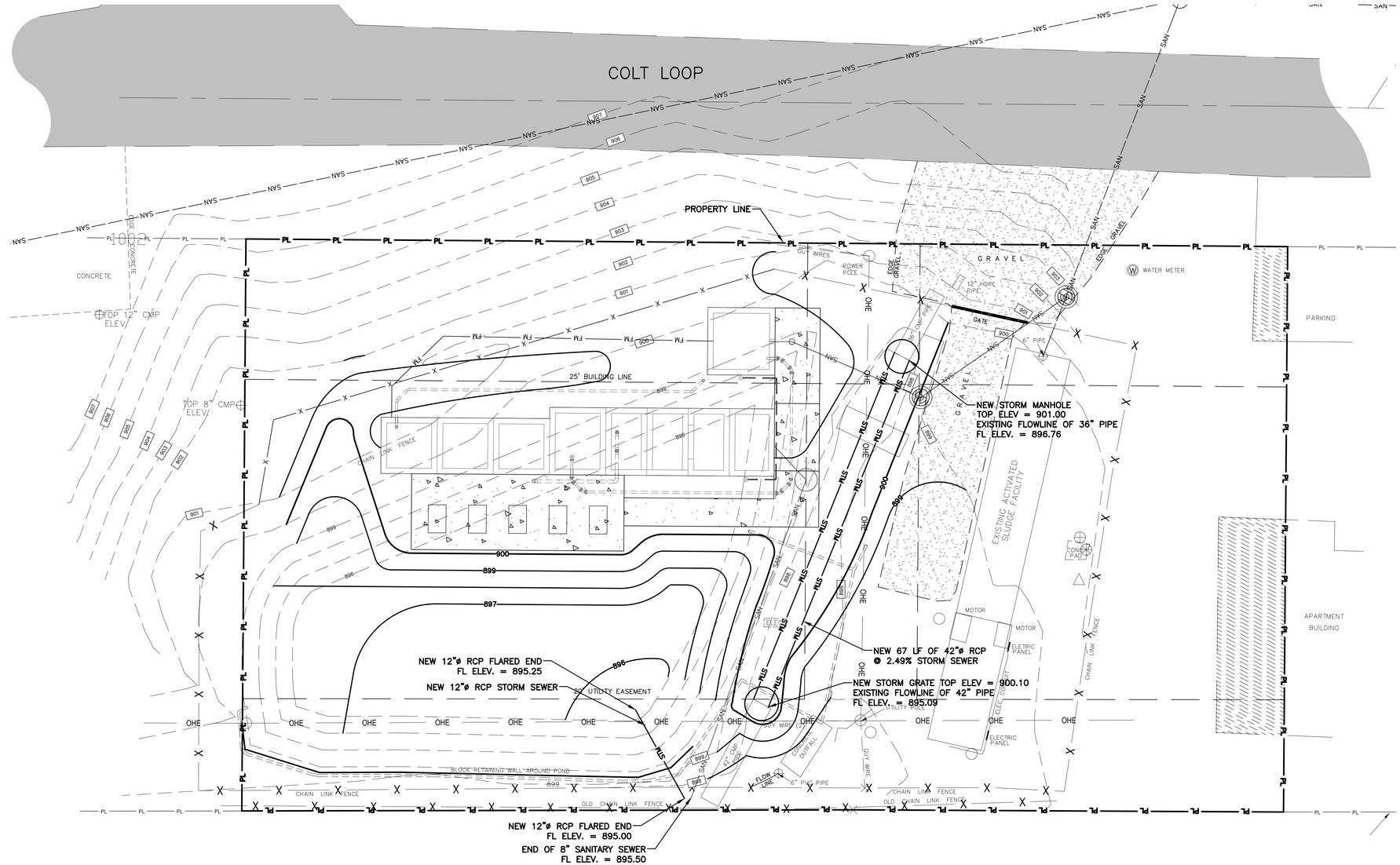

#	DATE	REVISION	BY
A	7/30/2020	PERMIT SET	

21 DESIGN GROUP INC.
1351 Jefferson, Suite 301
Washington, MO 63090
mail@21designgroup.net
P: 636-432-3029

GRADING PLAN

BROCK LYN WWTF
HAGER DRIVE
RICHMOND, KY

ENGINEERING CERTIFICATE OF AUTHORITY NO. 4804
ENGINEERING LICENSE:
BENJAMIN J. KUENZEL, PE33718

STATE OF KENTUCKY
BENJAMIN J. KUENZEL
33716
LICENSED PROFESSIONAL ENGINEER

SEAL DATE:	07/30/2020
DRAWN BY:	BJK
PROJ NUMBER:	18-0475
DATE:	07/30/2020
DRAWING NO:	C05

ALL RIGHTS RESERVED. All "21 Design Group, Inc." plans, specifications and drawings are protected under copyright law and no part may be copied, reproduced, displayed publicly, used to create derivatives, distributed, stored in a retrieval system or transmitted in any form by any means without prior written permission of "21 Design Group, Inc."

BAR IS ONE INCH ON OFFICIAL DRAWINGS. 0 1" IF NOT ONE INCH, ADJUST SCALE ACCORDINGLY.

NOTES:
1. PORTLAND CEMENT CONCRETE SHALL COMPLY WITH CURRENT DOT STANDARD SPECIFICATIONS FOR ROAD AND BRIDGE CONSTRUCTION. CONCRETE SHALL HAVE A 28-DAY COMPRESSIVE STRENGTH OF 4,000 PSI, AIR ENTRAINMENT OF 5 TO 7 PERCENT, AND SLUMP BETWEEN 1 TO 3 INCHES.
2. SUBGRADE SHALL BE COMPACTED TO A DENSITY OF NO LESS THAN 95% OF STANDARD PROCTOR (PER ASTM D-698)
3. SEE GEOTECHNICAL REPORT FOR PAVEMENT SPECIFICATION REQUIREMENTS.
4. MAXIMUM JOINT SPACING SHALL BE 24 TIMES THE CONCRETE THICKNESS WITH SLABS BE NO GREATER THAN 2:1 LENGTH TO WIDTH.
5. NON-REINFORCED CONCRETE PAVING. CONTRACTOR TO USE SMOOTH DOWELS AT CONSTRUCTION JOINTS.
6. SEE GEOTECHNICAL REPORT FOR ALL COMPACTION, POURING, AND MATERIAL REQUIREMENTS. IF A CONFLICT EXISTS, THE GEOTECHNICAL REPORT GOVERNS.
7. PROOF ROLL SUBGRADE DOUBLE TANDOM AXLE TRUCK PRIOR TO PLACING ROCK BASE MATERIAL.
8. CONCRETE CURING SHALL BE PROVIDED PER ASTM C-309 OR MODOT SPECIFICATIONS, WHICHEVER IS GREATER.
9. JOINT SEALER PER MODOT SPECIFICATIONS.
10. WEATHER PROVISIONS SHALL COMPLY TO MODOT STANDARD CONSTRUCTION REQUIREMENTS.

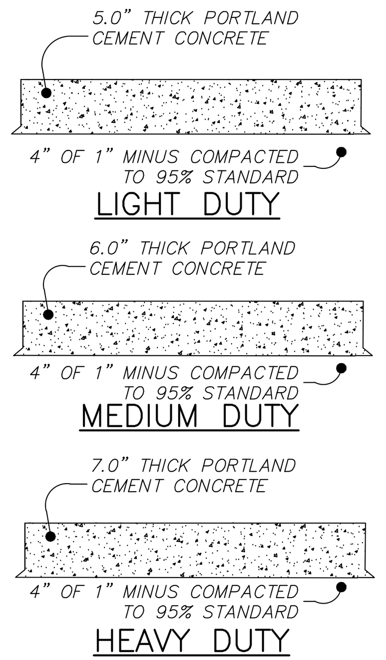

CONCRETE SECTION DETAILS
Not To Scale

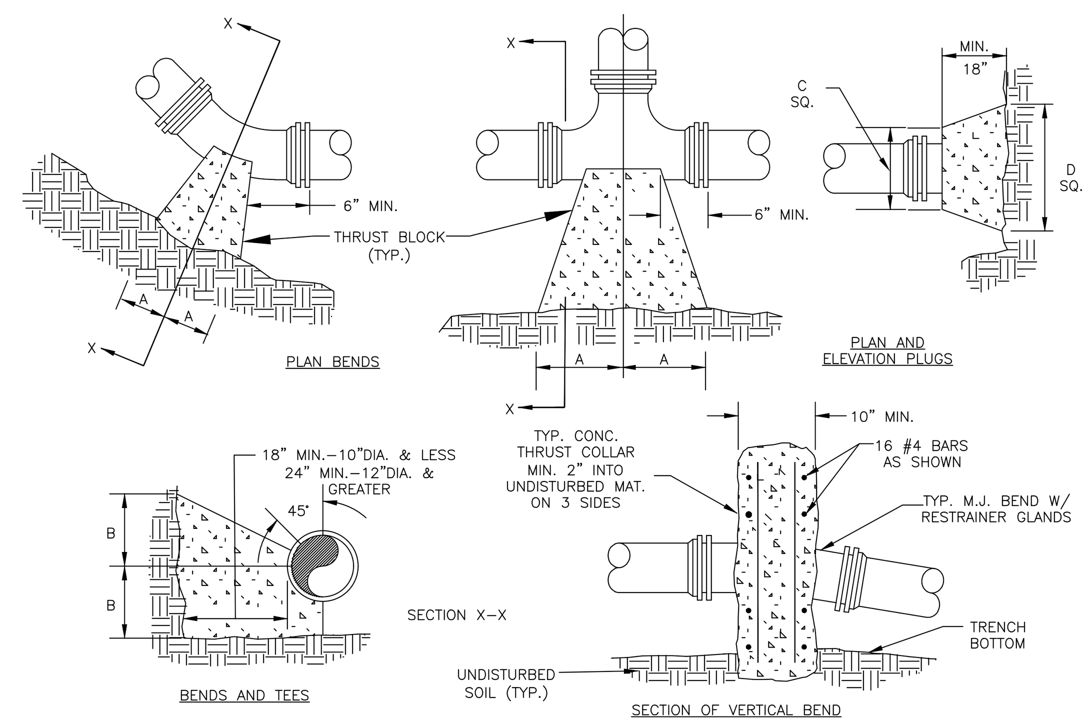

NOTES:
1. FOR VERT. BEND DOWN IN EXCESS OF 11 1/4" BEND, ANCHORAGE SHALL BE DESIGNED BY ENGINEER.
2. FOR VERT. BEND UPWARD, BLOCKING TO BE SIMILAR TO THAT FOR HORIZ. BEND.
3. GLANDS & BOLTS SHALL BE PROTECTED FROM CONC. BY PLASTIC SHEETING WHEN POURING THRUST BLOCKS.
4. ALL THRUST BLOCK & SUPPORT CONC. SHALL BE 3000 PSI READY MIX CONC.
5. THRUST BLOCKS WITH "B" DIMENSION GREATER THAN 30" SHALL HAVE THE RESTRAINED PIPE INSTALLED WITH A MINIMUM OF 4' OF COVER.

PRESSURE = 200 psi
BEARING = 2000 psf
FACTOR OF SAFETY = 1.5

PIPE SIZE	90° BEND		45° BEND		22 1/2° BEND		11 1/4° BEND		TEE		PLUG	
	A	B	A	B	A	B	A	B	A	B	C	D
4"	8"	12"	8"	8"	6"	6"	6"	6"	11"	9"	10"	6"
6"	18"	12"	8"	10"	8"	8"	8"	8"	11"	10"	12"	18"
8"	18"	13"	10"	10"	8"	8"	8"	8"	11"	12"	12"	24"
10"	20"	16"	12"	14"	8"	12"	8"	12"	14"	16"	16"	30"
12"	20"	16"	12"	14"	8"	12"	8"	12"	14"	16"	16"	30"
16"	26"	20"	16"	18"	11"	13"	11"	13"	18"	20"	20"	36"
24"	82"	42"	62"	30"	44"	22"	22"	16"	82"	42"	82"	42"
30"	185"	42"	100"	42"	52"	42"	40"	30"	185"	42"	185"	42"

THRUST BLOCK CONSTRUCTION
Not To Scale

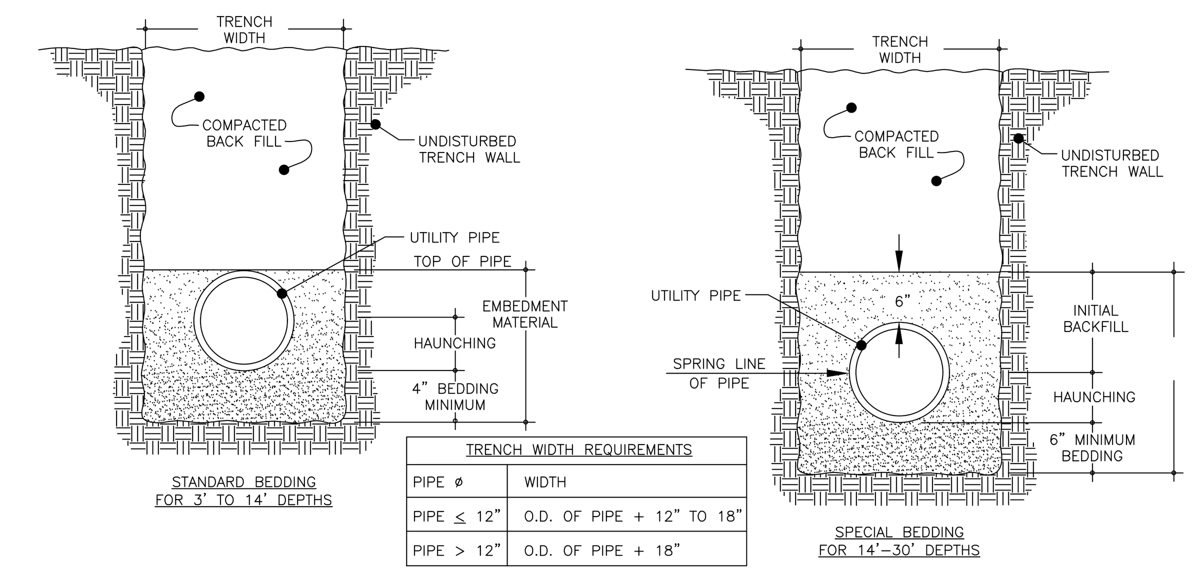

TRENCH WIDTH REQUIREMENTS	
PIPE ø	WIDTH
PIPE ≤ 12"	O.D. OF PIPE + 12" TO 18"
PIPE > 12"	O.D. OF PIPE + 18"

NOTES:
1. EMBEDMENT MATERIAL MUST BE 1" MINUS GRANULAR BACKFILL.
2. EMBEDMENT MATERIAL SHALL BE COMPACTED TO A MINIMUM 95% STANDARD PROCTOR DENSITY.
3. STANDARD BEDDING SHALL BE UTILIZED FOR ALL CASES WHERE TRENCH BOTTOMS ARE UNSTABLE DUE TO SOIL TYPE OR MOISTURE CONDITIONS.
4. TRENCH EXCAVATION SHALL CONFORM TO ALL OSHA CONSTRUCTION REQUIREMENTS.
5. ANY TRENCHING UNDER PAVED AREAS SHALL BE BACKFILLED WITH 1" MINUS AND COMPACTED TO 95% STANDARD PROCTOR DENSITY.
6. CONTRACTOR IS RESPONSIBLE FOR TRENCH SETTLEMENT.
7. IN AREAS OF ROCK CUT, TRENCHES SHALL BE BACKFILLED WITH WELL GRADED GRANULAR MATERIAL TO 6" ABOVE THE TOP OF PIPE.
8. ALL UTILITY INSTALLATION SHALL CONFORM TO THE PIPE MANUFACTURER.
9. HAUNCING SHALL BE WORKED AROUND THE PIPE BY HAND TO ELIMINATE ALL VOIDS.

TRENCH DEPTH REQUIREMENTS	
UTILITY	MIN DEPTH
GAS	SEE UTILITY CO.
WATER	42"
ELECTRIC	24"
SANITARY	36"

PIPE REQUIREMENTS				
UTILITY	0' TO 3'	3' TO 16'	16' TO 30'	> 30'
GAS	SEE UTILITY COMPANY			
WATER	DUCTILE	CLASS 200	DUCTILE	N/A
ELECTRIC	PVC	PVC	N/A	N/A
STORM	CONCRETE	HDPE	CONCRETE	CONCRETE
SANITARY	DUCTILE	CLASS 200	DUCTILE	N/A

UTILITY TRENCHING & BEDDING DETAIL
Not To Scale

ALL RIP-RAP BLANKETS FOR THIS PROJECT SHALL BE 20' IN LENGTH.

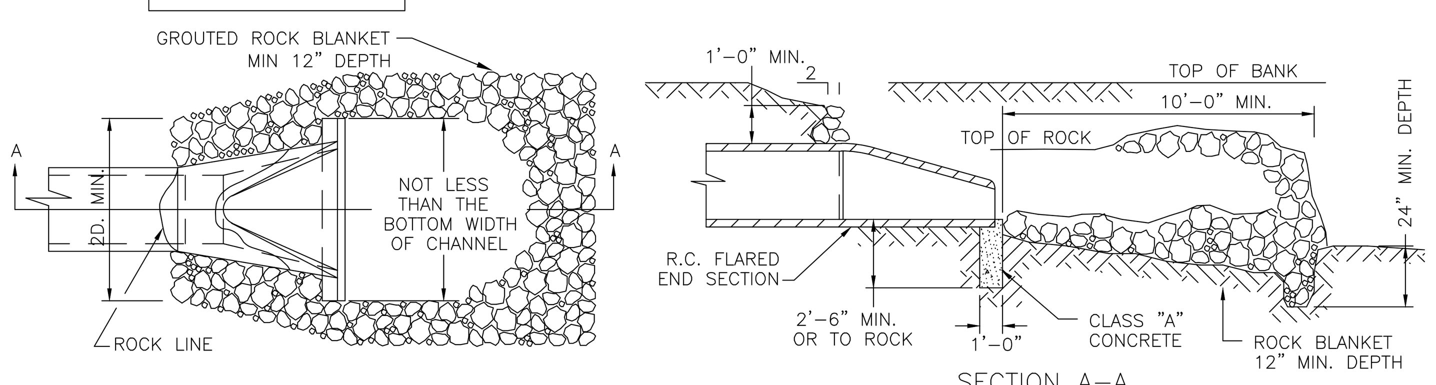

FLARED END SECTION RIP RAP BLANKET
Not To Scale

NOTE: TO BE USED AT INTAKE AND DISCHARGE END OF PIPE, GRADE OF ROCK BLANKET TO BE ADJUSTED ACCORDINGLY.

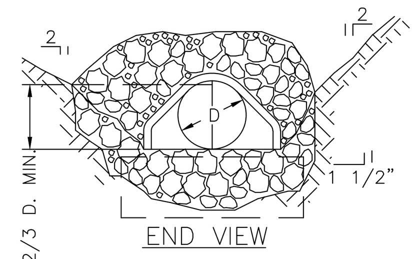

GROUTED ROCK BLANKET REQUIRED.

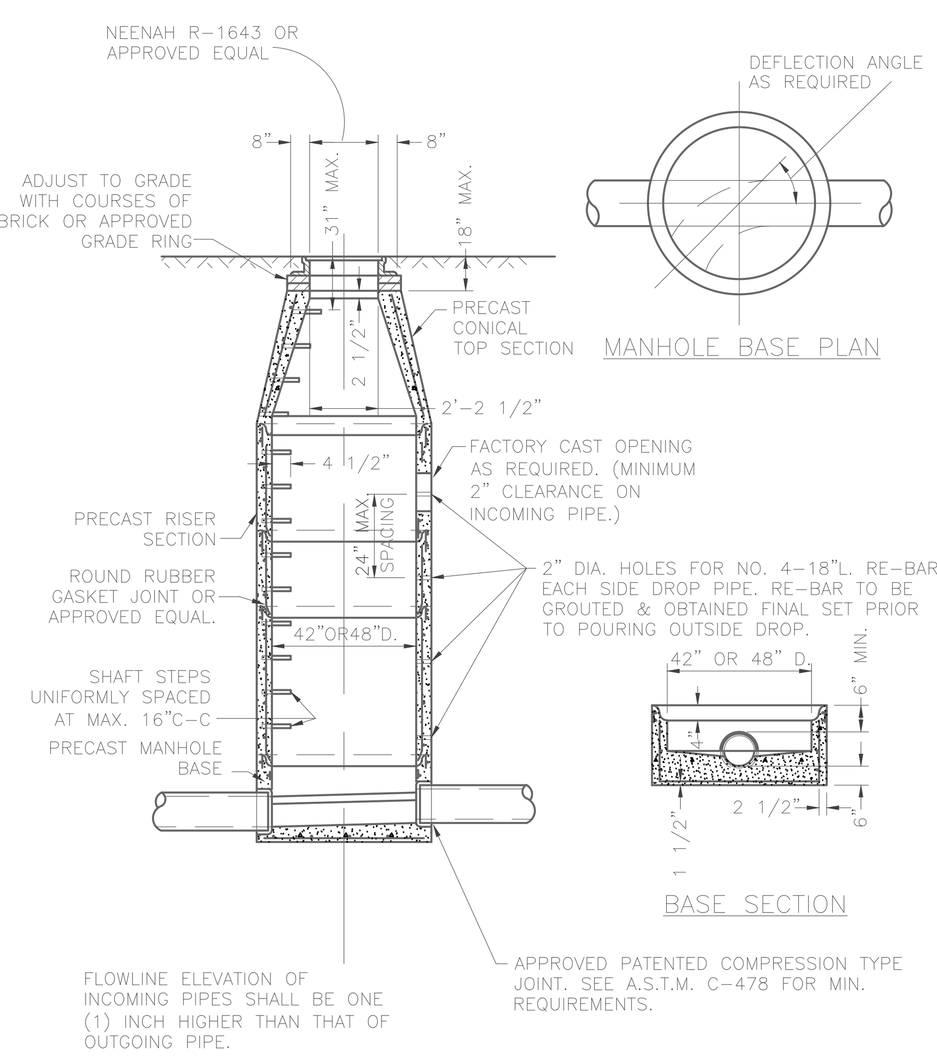

PRE-CAST CONCRETE MANHOLE FOR SEWERS 8" THROUGH 18"
Not To Scale

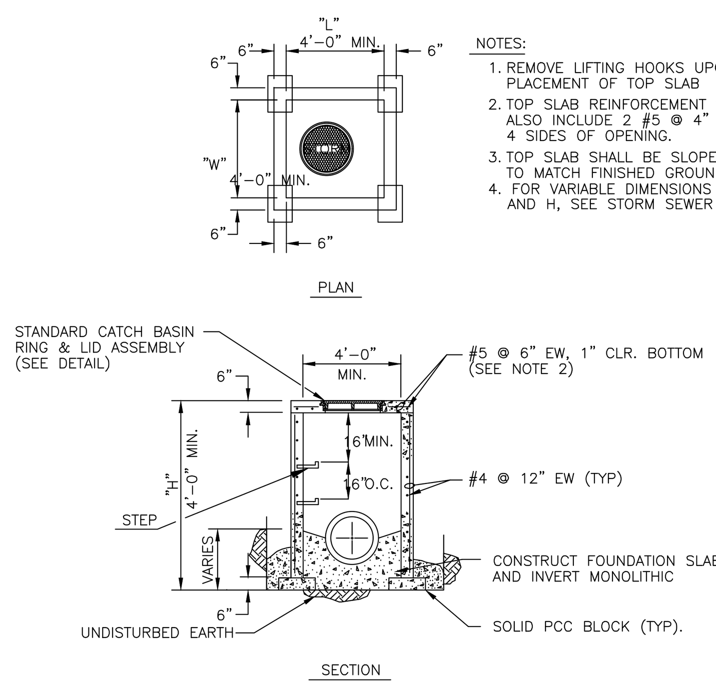

NOTES:
1. REMOVE LIFTING HOOKS UPON PLACEMENT OF TOP SLAB
2. TOP SLAB REINFORCEMENT SHALL ALSO INCLUDE 2 #5 @ 4" DIAG. 4 SIDES OF OPENING.
3. TOP SLAB SHALL BE SLOPED TO MATCH FINISHED GROUND LINE.
4. FOR VARIABLE DIMENSIONS L, W, AND H, SEE STORM SEWER PROFILES.

STORM MANHOLE DETAIL
Not To Scale

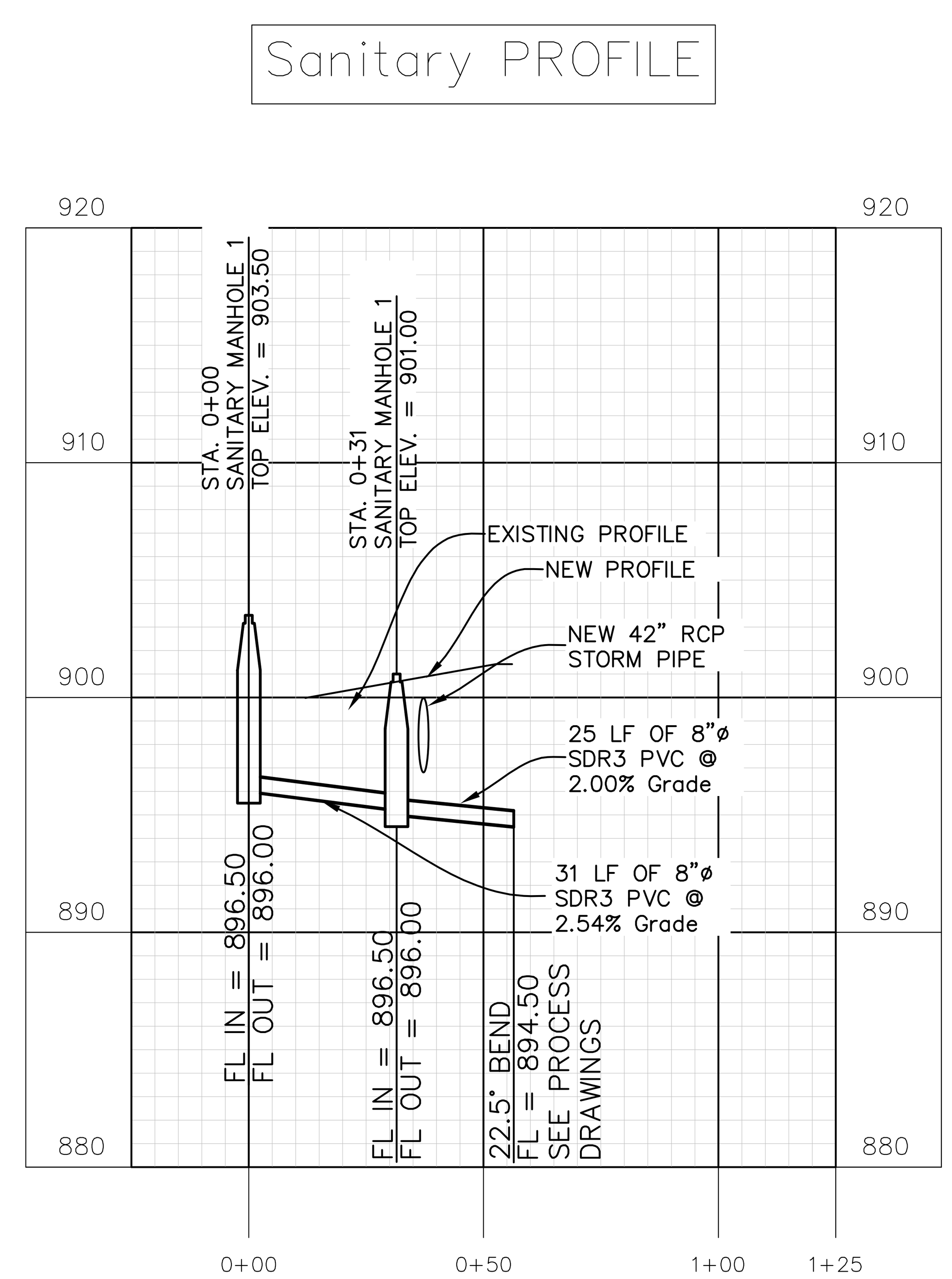

INFLUENT SANITARY SEWER PROFILE

THIS DOCUMENT IS TRUE AND CORRECT AT TIME OF PUBLICATION. CONTINUED PRODUCT IMPROVEMENTS MAKE SPECIFICATIONS AND MEASUREMENTS SUBJECT TO CHANGE WITHOUT NOTICE.

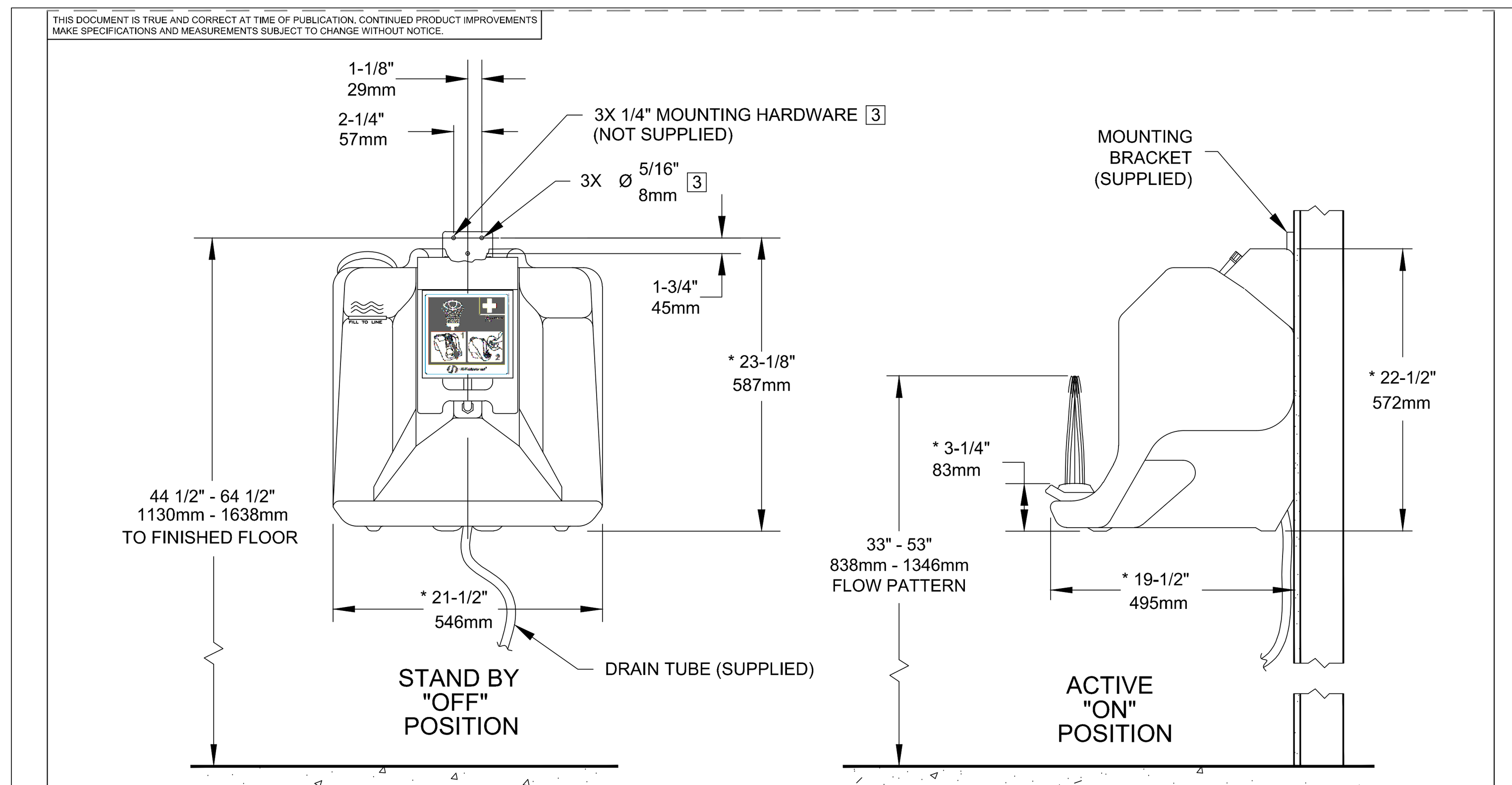

NOTES:
1. TO COMPLY WITH ANSI Z358.1-2014 FOR EMERGENCY EYEWASH OR EYE/FACE WASH: EYEWASH OR EYE/FACE WASH SHALL BE POSITIONED SUCH THAT FLUSHING FLUID PATTERN IS NOT LESS THAN 33" (838mm) AND NO GREATER THAN 53" (1346mm) FROM SURFACE ON WHICH USER STANDS; AND 6.0" (153mm) MINIMUM FROM WALL OR NEAREST OBSTRUCTION.
2. UNIT MUST BE LEVEL FROM FRONT TO BACK AND SIDE TO SIDE.
3 ALL THREE MOUNTING HOLES ON MOUNTING-BRACKET MUST BE USED TO PROPERLY SECURE EYEWASH UNIT TO WALL.
4. WHEN INSTALLING THIS UNIT, LOCAL , STATE, OR FEDERAL CODES SHOULD BE ADHERED TO FOR INSTALLATION DIMENSIONS (LOCATIONS), WASTE AND SUPPLY REQUIREMENTS, ETC.
5. *DIMENSIONS MAY VARY ±1/2" [12.7mm]

Haws®
1455 KLEPPE LANE
SPARKS, NEVADA 89431
(775) 359-4712 FAX (775) 359-7424
E-MAIL: HAWS@HAWSCO.COM
WEBSITE: WWW.HAWSCO.COM

ECN NO. #1 | REVISED PER ECN: #2 | BY: REVNAME | MODEL(S) | MODEL(S) TITLE: | PART NUMBER PART# | REVISION REV.
DRAWN: NAME1 | DATE: DATE1 | CHK'D.: NAME2
APPROVED: NAME3 | DATE: DATE2 | SCALE: SC | DRAWING TYPE: DWG.TYPE | SIZE: A | SHEET 1 OF X

©YR Haws Corporation - All Rights Reserved. HAWS® and other trademarks used in these materials are the exclusive property of Haws Corporation.

PORTABLE EYE WASH STATION

#	DATE	REVISION	BY
A	7/30/2020	PERMIT SET	

21 DESIGN GROUP INC.
1351 Jefferson, Suite 301
Washington, MO 63090
mail@21designgroup.net
P: 636-432-5029

DETAIL SHEET

BROCKLYN WWTF
HAGER DRIVE
RICHMOND, KY

ENGINEERING CERTIFICATE OF AUTHORITY NO. 4804
ENGINEERING LICENSE: BENJAMIN J. KUENZEL, PE33718

SEAL DATE:	07/30/2020
DRAWN BY:	BJK
PROJ NUMBER:	18-0475
DATE:	07/30/2020
DRAWING NO:	C06

ALL RIGHTS RESERVED. All "21 Design Group, Inc." plans, specifications and drawings are protected under copyright law and no part may be copied, reproduced, displayed publicly, used to create derivatives, distributed, stored in a retrieval system or transmitted in any form by any means without prior written permission of "21 Design Group, Inc."

BAR IS ONE INCH ON OFFICIAL DRAWINGS. 0 1" IF NOT ONE INCH, ADJUST SCALE ACCORDINGLY.

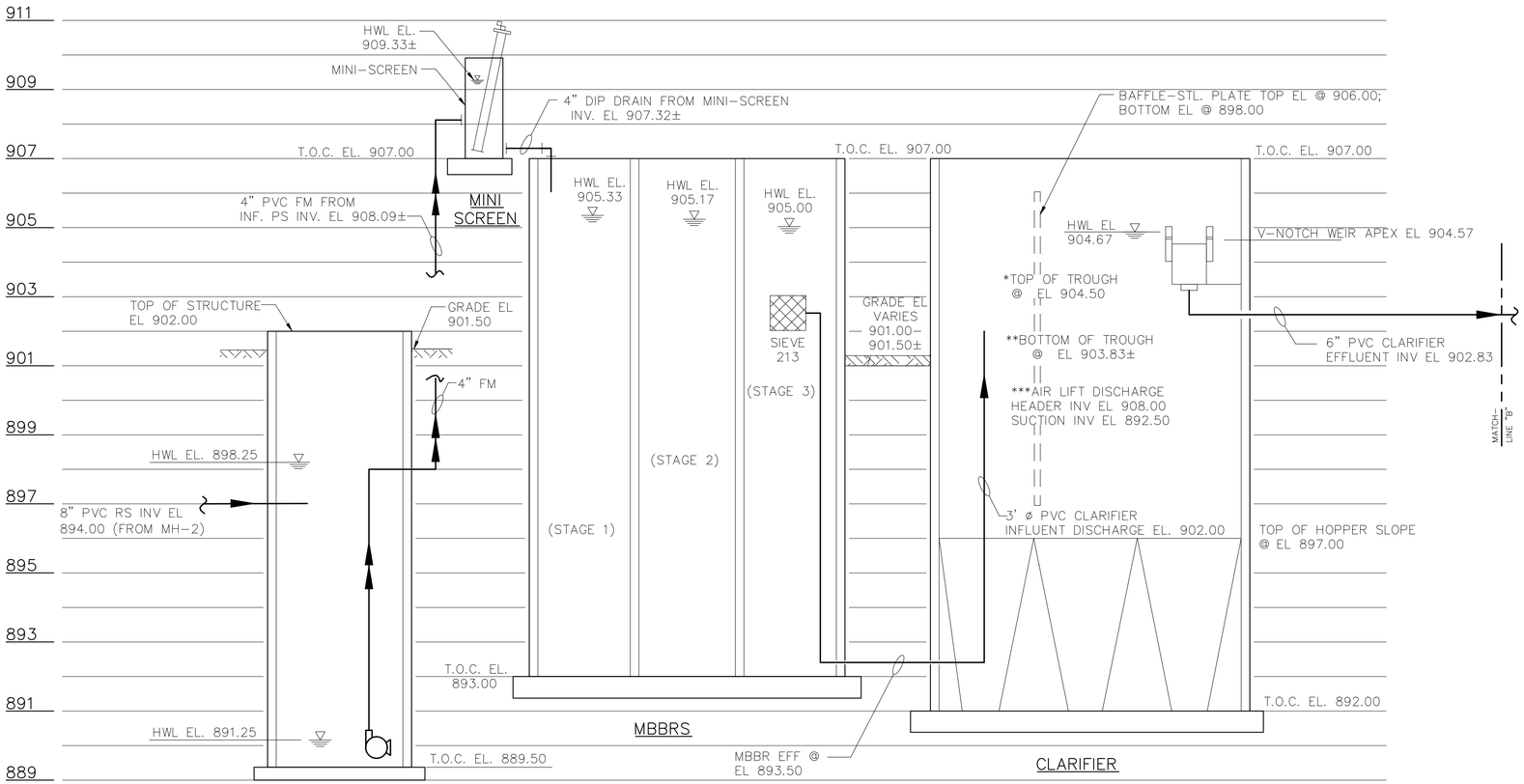

INFLUENT PUMP STA./ EQ/PRE-AERATION

WASTEWATER HYDRAULIC PROFILE

VERTICAL SCALE: 1" = 5'-0" HORIZONTAL SCALE: NONE

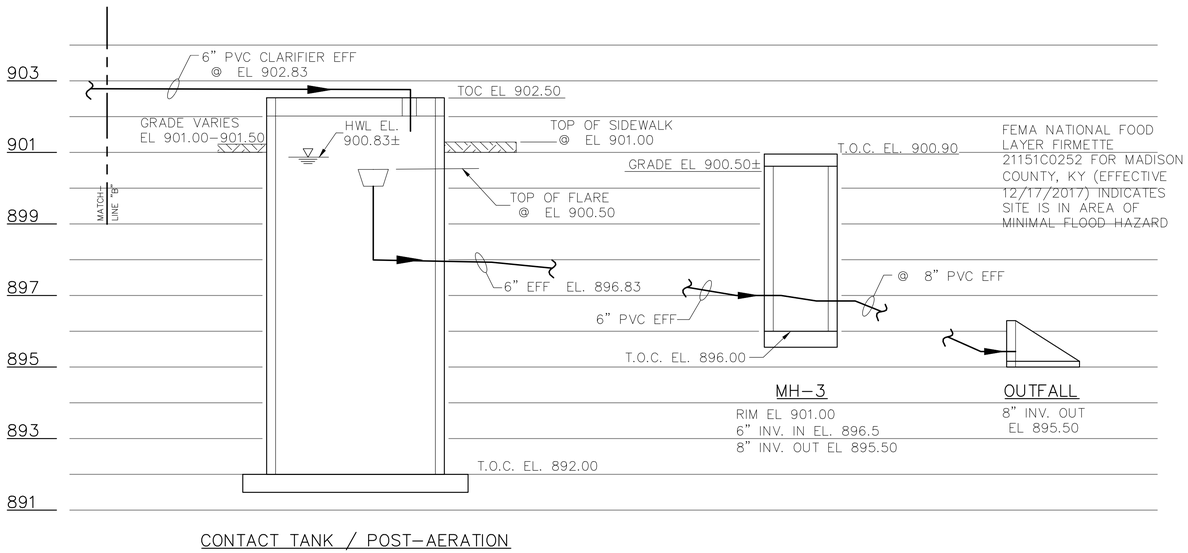

CONTACT TANK / POST-AERATION

WASTEWATER HYDRAULIC PROFILE

VERTICAL SCALE: 1" = 5'-0" HORIZONTAL SCALE: NONE

#	DATE	REVISION	BY
A	07/30/2020	PERMIT SET	BT

21 DESIGN GROUP INC.
1351 Jefferson, Suite 301
Washington, MO 63090
mail@21designgroup.net
P: 636-432-3029

HYDRAULIC PROFILE

BROCKLYN WWTF
HAGER DRIVE
RICHMOND, KY

ENGINEERING CERTIFICATE OF AUTHORITY NO. 4808
ENGINEERING LICENSE:
BENJAMIN J. KUENZEL, PE33716

STATE OF KENTUCKY
BENJAMIN J. KUENZEL
33716
LICENSED PROFESSIONAL ENGINEER

SEAL DATE:	07/30/2020
DRAWN BY:	MZ
PROJ NUMBER:	0542-19
DATE:	07/30/2020
DRAWING NO:	P1

ALL RIGHTS RESERVED. All "21 Design Group, Inc." plans, specifications and drawings are protected under copyright law and no part may be copied, reproduced, displayed publicly, used to create derivatives, distributed, stored in a retrieval system or transmitted in any form by any means without prior written permission of "21 Design Group, Inc."

BAR IS ONE INCH ON OFFICIAL DRAWINGS. 0 1" IF NOT ONE INCH, ADJUST SCALE ACCORDINGLY.

DESIGN CRITERIA:

PLANT INFLUENT FLOW	MBBR INFLUENT FLOW
Q_{ADF} = 40,000 GPD	140,000 GPD
Q_{PDF} = 160,000 GPD	140,000 GPD
Q_{PHF} = 240,000 GPD	200,000 GPD

INF. PS/EQ

DIMENSIONS: 10'X10'X9'
TOTAL VOLUME: 6,732 GAL.
HRT @ ADF: 4 HRS.
HRT @ PDF: 1.2 HRS
MIXING AIR: 20 SCFM/1,000 CF
P–111 – 30 GPM @ 20–FT TDH
P–112 – 110 GPM @ 20–FT TDH
P–113 – 110 GPM @ 20–FT TDH

MBBRS

DIMENSIONS: 8'X8'X12.17' (AVG WATER DEPTH)
TOTAL VOLUME: 17.478 GAL.
HRT @ADF: 10.5 HRS.
HRT @ PDF: 3.0 HRS
MEDIA FILL: 43%
TOTAL SURF AEREA: 13,894 M^2

CLARIFIERS:

DIMENSIONS: 10'X 20' X 12'–10"
SURFACE AREA: 200 SF
SOR @ PDF: 700 GPD/SF
SOR @ PHF: 1,000 GPD/SF
WEIR LENGTH: 20 FT.
WEIR OVERFLOW RATE: @ PHF: 10,000 GPD/FT.

CONTACT TANK/POST AERATION

DIMENSIONS: 10'X6'X8.83'
TOTAL VOLUME: 3,964 GAL.
HRT @ PDF: 41– MINUTES
(W/OUT INCLUDING EFFLUENT PIPE HRT.)

POST AERATION
MIXING AIR : 15 SCFM/1,000 CF

PAA FEED PUMP
MINIMUM PUMPING CAPACITY FOR 5 PPM AS PAA (4.6 GPD)
PUMP CAPACITY PROPOSED: 15.1 GPD
W/PERISTALTIC PUMP

PAA STORAGE
STORE W/55 GAL DRUM: 107 DAYS
ESTIMATED (ASSUMES 2 PPM AS PAA OR 12.8 PPM AS PROXITANE IS REQUIRED DOSAGE).

AEROBIC DIGESTER

DIMENSIONS: 10'X8'X12'
TOTAL VOLUME: 7,180 GAL.
CUBIC FEET/PE: 1.54 CF/PE
ESTIMATED SRT : 80 DAYS
(W/4,000 MG/L DIGESTED SLDG.)

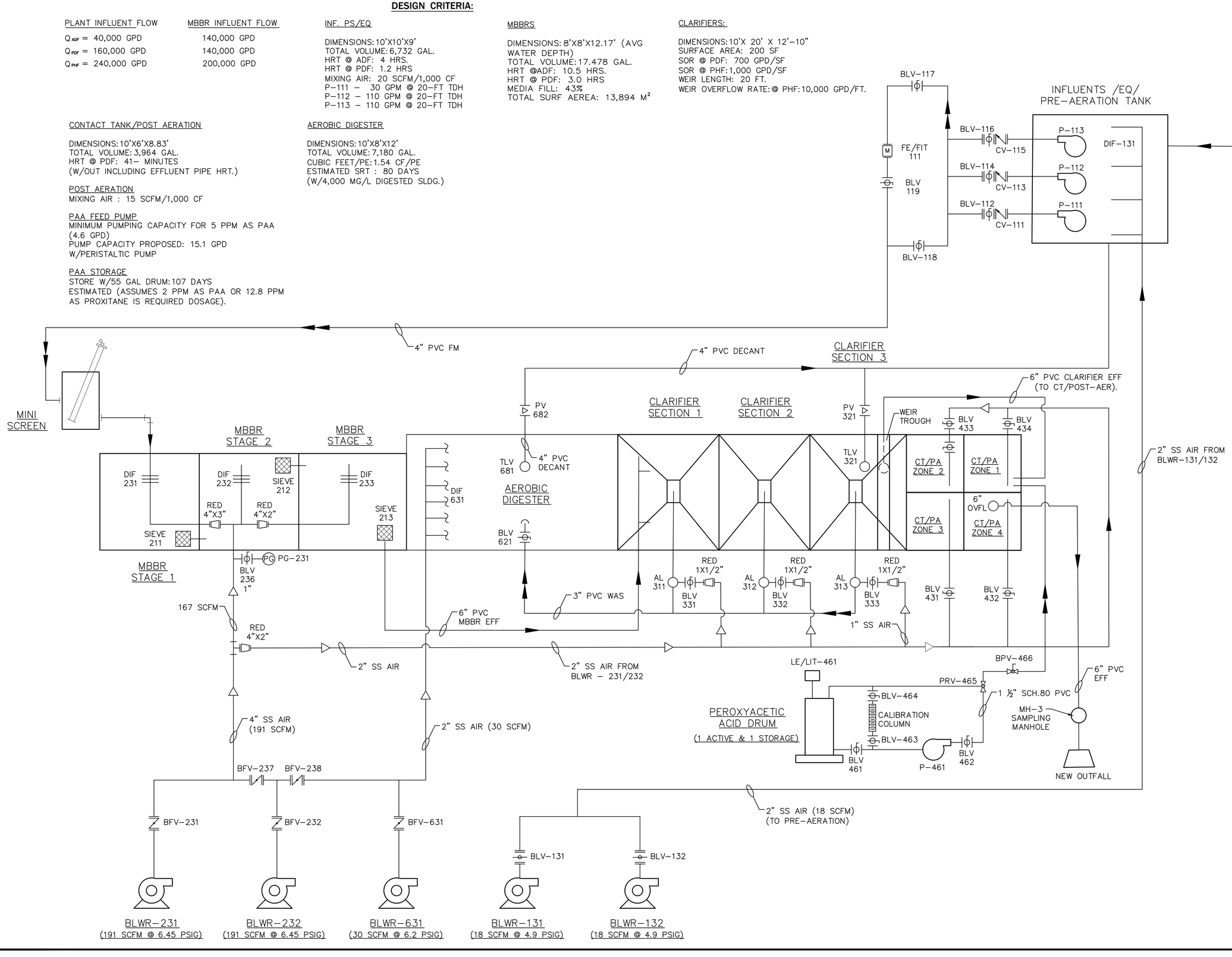

#	DATE	REVISION	BY
A	07/30/2020	PERMIT SET	BT

21 DESIGN GROUP INC.
1351 Jefferson, Suite 301
Washington, MO 63090
mail@21designgroup.net
P: 636-432-5029

PROCESS FLOW DIAGRAM

BROCKLYN WWTF
HAGER DRIVE
RICHMOND, KY

ENGINEERING CERTIFICATE OF AUTHORITY NO. 4808
ENGINEERING LICENSE: BENJAMIN J. KUENZEL, PE33716

STATE OF KENTUCKY · BENJAMIN J. KUENZEL · 33716 · LICENSED PROFESSIONAL ENGINEER

SEAL DATE:	07/30/2020
DRAWN BY:	MZ
PROJ NUMBER:	0542-19
DATE:	07/30/2020
DRAWING NO:	P2

ALL RIGHTS RESERVED. All "21 Design Group, Inc." plans, specifications and drawings are protected under copyright law and no part may be copied, reproduced, displayed publicly, used to create derivatives, distributed, stored in a retrieval system or transmitted in any form by any means without prior written permission of "21 Design Group, Inc."

BAR IS ONE INCH ON OFFICIAL DRAWINGS. 0 1" IF NOT ONE INCH, ADJUST SCALE ACCORDINGLY.

FOUNDATION NOTES:

1. THE FOUNDATION DESIGN IS BASED ON THE GEOTECHNICAL REPORT. CONTRACTOR WILL BE FURNISHED WITH GEOTECHNICAL REPORT FOLLOWING WRITTEN REQUEST.
2. ALL SOIL SUPPORTED FOOTINGS SHALL BE FOUNDED UPON UNDISTURBED NATURAL SUBGRADE WITH A MINIMUM ALLOWABLE BEARING CAPACITY OF 3,000 PSF AS FIELD VERIFIED AND APPROVED BY THE CONTRACTOR'S SOIL TESTING LABORATORY. FINAL, EXACT ELEVATIONS AND SOIL BEARING CAPACITIES SHALL E FIELD DETERMINED AND VERIFIED BY THE CONTRACTOR'S SOIL TESTING LABORATORY AND REVIEWED BY THE ENGINEER DURING CONSTRUCTION.
3. SHOULD UNACCEPTABLE SOIL BE FOUND AT THE BEARING ELEVATION, THE SOIL SHOULD BE REMOVED TO A LEVEL OF ACCEPTABLE MATERIAL. THE OVER EXCAVATION WIDTH SHALL EXTEND LATERALLY AT LEAST 12" BEYOND THE FOUNDATION EDGE FOR EACH 12" OF OVER EXCAVATION DEPTH. THE OVER EXCAVATION SHALL BE BACKFILLED WITH COMPACTED GRANULAR FILL AND TESTED BY THE CONTRACTOR'S TESTING AGENCY.
4. SOIL SUBGRADE FOR ALL FOOTINGS AND SLABS SHALL BE INSPECTED AND APPROVED BY THE CONTRACTOR'S SOIL TESTING LABORATORY PRIOR TO PLACING FOUNDATION CONCRETE OR CONCRETE MUD SUBS.
5. ALL FOOTING SUBGRADES AS REQUIRED AND ALL SLAB SUBGRADES INCLUDING PIT SLABS SHALL BE COMPACTED TO 95 PERCENT OF MAXIMUM DENSITY AT OPTIMUM MOISTURE CONTENT BASED ON LABORATORY DESIGNED ASTM D1557. ALL BACKFILL AROUND AND ABOVE ALL FOUNDATION ELEMENTS, FOOTINGS, CAPS, MATS AND PITS SHALL BE COMPACTED TO 90 PERCENT OF MAXIMUM DENSITY AT OPTIMUM MOISTURE CONTENT BASED ON LABORATORY DESIGNATION ASTM D1557.
6. ALL ORGANIC AND/OR OTHER UNSUITABLE MATERIALS SHALL BE REMOVED FROM SUBGRADE AND BACKFILL AREAS AND BACKFILLED WITH ACCEPTABLE GRANULAR FILL, COMPACTED TO 95 PERCENT O MAXIMUM DENSITY. FILL SHALL BE PLACED IN LIFTS NOT TO EXCEED 12 INCHES IN LOOSE THICKNESS.
7. DO NOT BACKFILL AGAINST BASEMENT WALLS UNTIL GROUND FLOOR AND LOWER LEVEL SLABS AVE BEEN PLACED AND THE CONCRETE HAS ATTAINED FULL DESIGN STRENGTH.
8. NO MUD SLABS, FOOTINGS OR SLABS SHALL BE PLACED INTO OR AGAINST SUBGRADE CONTAINING FREE WATER, FROST OR ICE. SHOULD WATER OR FROST ENTER A FOOTING EXCAVATION AFTER SUBGRADE APPROVAL THE SUBGRADE SHALL BE RE-INSPECTED BY THE CONTRACTOR'S SOIL TESTING LABORATORY AFTER REMOVAL OF WATER OR FROST.
9. THE CONTRACTOR SHALL PROVIDE ALL NECESSARY MEASURES TO PREVENT ANY FROST OR ICE FROM PENETRATING ANY FOOTING OR SLAB SUBGRADE BEFORE AND AFTER PLACING OF CONCRETE AND UNTIL SUCH SUBGRADES ARE FULLY PROTECTED BY THE PERMANENT BUILDING STRUCTURE.
10. THE CONCRETE FOR EACH ISOLATED FOOTING SHALL BE PLACED IN ONE (1) CONTINUOUS PLACEMENT.
11. ALL SLAB AND FOOTING MUD SLABS SHALL BE THOROUGHLY CLEANED IMMEDIATELY PIOR TO THE FOUNDATION CONCRETE PLACEMENT.
12. ALL SLABS-ON-GRADE SHALL BE PLACED OVER A MINIMUM OF 6 INCH COMPACTED GRANULAR FILL MATERIAL OVER COMPACTED SOIL SUBGRADE.
13. THE ANTICIPATED GROUND WATER ELEVATION IS APPROXIMATELY 896.50. THE CONTRACTOR IS RESPONSIBLE FOR ALL DEWATERING. THE VERY LOOSE TO LOOSE GRANULAR SOILS SHOULD BE DENSIFIED AFTER DEWATERING, AS PER THE DIRECTIVE OF THE SOILS TESTING AGENCY.

CONCRETE NOTES:

1. ALL CONCRETE SHALL CONFORM TO THE REQUIREMENTS OF ACI 318, ACI 301, AND ACI 350. THESE DOCUMENTS SHALL BE AVAILABLE IN THE FIELD OFFICE.
2. EXCEPT WHERE OTHERWISE INDICATED, CONCRETE TYPES AND MINIMUM 28-DAY COMPRESSIVE STRENGTHS SHALL BE 4000 PSI.
3. CEMENT SHALL CONFORM TO ASTM C150 TYPE 1. USE ONLY ONE BRAND OF CEMENT PER ALL EXPOSED TO VIEW CONCRETE. NO CALCIUM CHLORIDE SHALL BE USED IN ANY CONCRETE.
4. ALL CONCRETE SHALL BE AIR ENTRAINED (4 – 6%) WITH A WATER CEMENT RATIO OF 0.4 (MAX) AND MAY CONTAIN A SUPER PLAST AGENT.
5. REINFORCING BARS SHALL CONFORM TO ASTM A515, GRADE 60.
6. ALL CONCRETE REINFORCEMENT SHALL BE DETAILED, FABRICATED, LABELED, SUPPORTED AND SPACED IN FORMS AND SECURED IN ACCORDANCE WITH THE PROCEDURES AND REQUIREMENTS OUTLINED IN THE LATEST EDITION OF THE 'MANUAL OF STANDARD PRACTICE FROM DETAILING REINFORCED CONCRETE STRUCTURES', ACI 315. BAR SUPPORTS IN CONTACT WITH EXPOSED SURFACES SHALL BE PLASTIC TIPPED.
7. CHECKED SHOP DRAWINGS SHOWING REINFORCING DETAILS, INCLUDING STEEL SIZES, SPACING AND PLACEMENT SHALL BE SUBMITTED TO THE ENGINEER FOR REVIEW PRIOR TO FABRICATION.
8. THE CONTRACTOR SHALL SUBMIT DETAILED DRAWINGS SHOWING THE LOCATIONS OF ALL CONSTRUCTION JOINTS, REVEALS, CURBS, SLAB DEPRESSIONS, SLEEVES, OPENINGS, ETC. ALONG WITH THE CONCRETE POUR SEQUENCE SCHEDULES. THE MAXIMUM DISTANCE BETWEEN JOINTS SHALL BE 40 FT.
9. ALL REINFORCING SPLICES SHALL CONFORM TO THE REQUIREMENTS OF ACI 318, LATEST EDITION, BUT IN NO CASE SHALL BE LESS THAN 36 BAR DIAMETERS, UNLESS NOTED OTHERWISE. ALL WELDED WIRE FABRIC SHALL BE LAPPED TWO (2) FULL MESH PANELS AND TIED SECURELY. WHERE REQUIRED, DOWELS SHALL MATCH SIZE AND NUMBER OF MAIN REINFORCING, UNLESS NOTED OTHERWISE. THE LOCATION OF SPLICES FOR HORIZ. BARS SHALL BE STAGGERED BY A MIN. OF 3 FT. WITHIN THE SECTION. SPLICES SHALL NOT LINE UP WITHING ANY 4 ADJACENT ROWS.
10. CONCRETE TESTING WILL BE PERFORMED BY THE CONTRACTOR'S TESTING LABORATORY IN ACCORDANCE WITH ACI 301 EXCEPT AS FOLLOWS: FOR COMPRESSIVE STRENGTH TEST, TAKE ONE SET OF THREE (3) SPECIMENS FOR FOR EACH 50 CUBIC YARDS OR FRACTION THEREOF OF EACH CONCRETE CLASS PLACED IN ANY ONE DAY. TEST ONE (1) SPECIMEN AT 7 DAYS, ONE (1) SPECIMIN AT 28 DAYS, AND KEEP ONE (1) IN RESERVE.
11. PROVIDE SHEAR KEY AND WATERSTOP AT ALL CONSTRUCTION & CONTRACTION JOINTS.
12. PROVIDE CONTROL/CONSTRUCTION JOINTS IN SLABS ON GRADE NO FURTHER THAN 15 FEET APART
13. FOLLOW ACI GUIDELINES FOR BOTH HOT & COLD WEATHER CONCRETING.

MISCELLANEOUS NOTES:

1. NO CHANGE IN SIZE OR DIMENSION OF STRUCTURAL MEMBERS SHALL BE MADE WITHOUT THE WRITTEN APPROVAL OF THE ENGINEER.
2. REFER TO ARCHITECTURAL, MECHANICAL, PROCESSING OR MANUFACT. DRAWINGS FOR LOCATIONS AND DIMENSIONS OF OPENINGS. PROVIDE REINFORCING AROUND OPENINGS PER TYPICAL DETAILS.
3. THE CONTRACTOR IS RESPONSIBLE FOR LIMITING THE AMOUNT OF CONSTRUCTION LOAD IMPOSED UPON STRUCTURAL FRAMING. CONSTRUCTION LOADS SHALL NOT EXCEED THE CAPACITY OF THE FRAMING AT THE TIME THE LOADS ARE IMPOSED. BACKFILLING SHALL NOT BE ALLOWED UNTIL WALLS REACH DESIGN STRENGTH.
4. BACKFILL SHALL NOT BE PLACED AGAINST WALLS UNTIL FLOOR SLABS ARE INSTALLED AND HAVE REACHED 75% STRENGTH (MIN.).
5. THE STRUCTURE IS DESIGNED TO FUNCTION AS A UNIT UPON COMPLETION. THE CONTRACTOR SHALL FURNISH ALL TEMPORARY BRACING AND/OR SUPPORTS REQUIRED AS THE RESULT OF THE CONTRACTOR'S CONSTRUCTION METHODS AND/OR SEQUENCES.
6. DO NOT SCALE THESE DRAWINGS, USE DIMENSIONS.
7. THE CONTRACTOR SHALL INFORM THE ENGINEER IN WRITING OF ANY DEVIATION FROM THE CONTRACT DOCUMENTS. THE CONTRACTOR SHALL NOT BE RELIEVED OF THE RESPONSIBILITY FOR SUCH DEVIATION BY THE ENGINEERS APPROVAL OF SHOP DRAWINGS, PRODUCT DATA, ETC. UNLESS THE CONTRACTOR HAS SPECIFICALLY INFORMED THE ENGINEER OF SUCH DEVIATION AT THE TIME OF SUBMISSION, AND THE ENGINEER HAS GIVEN WRITTEN APPROVAL TO THE SPECIFIC DEVIATION.
8. ALL THINGS WHICH, IN THE OPINION OF THE CONTRACTOR, APPEAR TO BE DEFICIENCIES, OMISSIONS, CONTRADICTIONS AND AMBIGUITIES IN THE PLANS AND SPECIFICATIONS, SHALL BE BROUGHT TO THE ATTENTION OF THE ENGINEER. PLANS AND/OR SPECIFICATIONS WILL BE CORRECTED, OR A WRITTEN INTERPRETATION OF THE ALLEGED DEFICIENCY, OMISSION, CONTRADICTION OR AMBIGUITY WILL BE MADE BY THE ENGINEER BEFORE THE AFFECTED WORK PROCEEDS.
9. THESE DRAWINGS AND GENERAL NOTES ARE TO BE USED IN CONJUNCTION WITH WRITTEN SPECIFICATIONS PROVIDED. SEE SPECIFICATIONS FOR FURTHER REQUIREMENTS.
10. REMOVE ALL LOOSE AND UNSTABLE MATERIAL BELOW STRUCTURES. ALL AREAS TO BE REVIEWED BY OWNERS TESTING AGENCY PRIOR TO COMMENCEMENT OF WORK. PROVIDE A MINIMUM OF 12" COMPACTED GRANULAR FILL BELOW ALL STRUCTURES.
11. PROVIDE GUARDRAILS AT ALL PITS, WALKWAYS AND SLAB EDGES SEE C & P DRAWINGS FOR FURTHER INFORMATION.
12. PROVIDE HYDROPHILIC RUBBER WATERSTOP AT ALL NEW TO EXISTING CONDITIONS.
13. ALL FILL SHALL BE PLACED IN APPROPRIATE LIFTS AND COMPACTED PER GEOTECHNICAL REPORT IN ORDER TO OBTAIN A BEARING CAPACITY OF 300 PSF. ALL FILL SHALL BE TESTED BY THE CONTRACTOR'S TESTING AGENCY.

PRECAST NOTES:

1. THE PRECAST MANUFACTURER SHALL BE RESPONSIBLE FOR THE DESIGN OF ALL PRECAST CONCRETE ELEMENTS AND CONNECTIONS. THIS DESIGN SHALL MEET THE LOAD AND MATERIAL CRITERIA PRESENTED IN THE PLANS AND SPECIFICATIONS. DETAILS SHOWN ARE SCHEMATIC ONLY. FINAL DESIGN OF ELEMENTS AND CONNECTIONS SHALL BE MADE BY THE PRECAST MANUFACTURER. IN ADDITION, THE DESIGN SHALL BE PERFORMED BY A STRUCTURAL ENGINEER LICENSED IN THE STATE OF KENTUCKY. SIGNED & SEALED DRAWINGS AND CALCULATIONS SHALL BE SUBMITTED TO THE ENGINEER FOR REVIEW.
2. THE PRECAST ERECTOR SHALL BE RESPONSIBLE TO ADEQUATELY BRACE THE STRUCTURE DURING CONSTRUCTION.
3. THE PRECAST ERECTOR SHALL BE RESPONSIBLE FOR THE PROPER HANDLING OF PRECAST ELEMENTS SO THAT THESE MEMBERS ARE NOT DAMAGED DUE TO HANDLING, BRACING, ALIGNING OR OTHER FORCES.
4. MINIMUM CONCRETE REQUIREMENTS:

MIN 28 DAY COMPRESSIVE STRENGTH:	5,000 PSI
ENTRAINED AIR:	6 ± 1%
W/C (MAX)	0.40

5. PRECAST SUPPLIER SHALL PROVIDE ADDITIONAL REINFORCING AROUND EMBEDDED CONNECTION ITEMS TO SUPPORT ANY VERTICAL OR HORIZONTAL LOADINGS WHICH MAY DEVELOP INCLUDING THOSE FROM ERECTION.
6. PRECAST SHOP DRAWINGS SHALL BE REVIEWED AND APPROVED BY ELECTRICAL, HEATING AND PLUMBING SUBCONTRACTORS TO COORDINATE LOCATION OF SUPPORT INSERTS, BLOCKOUTS, CONDUITS, ETC.
7. ALL INSERTS IN PRECAST ELEMENTS SHALL BE PROVIDED BY PRECAST SUPPLIER.
8. PRECAST BEAMS SUPPORTING MASONRY SHALL HAVE A DEFLECTION LIMITATION OF L/600 AND 0.3 INCHES FOR LIVE LOAD PLUS SUPERIMPOSED DEADLOAD.
9. PROVIDE 1 LAYER WIRE MESH IN CONCRETE TOPPING.
10. PRECAST CONCRETE CEILINGS SHALL BE AIR TIGHT AT LOCATIONS NOTED.

STRUCTURAL STEEL NOTES:

1. ALL STRUCTURAL STEEL PLATES, SHAPES AND BARS SHALL CONFORM TO ASTM A572 GR 50, UNLESS NOTED OTHERWISE. COLD FORMED TUBING SHALL CONFORM TO ASTM A500 GRADE B. PIPES SHALL CONFORM TO ASTM A53 TYPE E OR S. ANCHOR BOLTS SHALL CONFORM TO ASTM A307 OR ASTM A36.
2. ALL BOLTS (OTHER THAN ANCHOR BOLTS), NUTS AND WASHERS SHALL CONFORM TO THE REQUIREMENTS OF ASTM A325. BOLTS USED IN LATERAL LOAD RESISTING CONNECTIONS SHALL BE SLIP CRITICAL TYPE, DESIGNED FOR INDICATED FORCES WITHOUT STRESS INCREASES.
3. ALL WELDING SHALL BE DONE BY QUALIFIED WELDERS AND SHALL CONFORM TO AWS D1.1 'STRUCTURAL WELDING CODE', LATEST EDITION. ALL WELDING ELECTRODES SHALL BE E70XX.
4. ALL CONNECTIONS SHALL BE DESIGNED AND DETAILED BY THE FABRICATOR. THE CONNECTIONS SHALL BE DESIGNED BY, OR UNDER THE SUPERVISION OF, A LICENSED STRUCTURAL ENGINEER IN THE STATE OF KENTUCKY. DETAILING SHALL BE PERFORMED USING RATIONAL ENGINEERING DESIGN AND STANDARD PRACTICE IN ACCORDANCE WITH THE CONTRACT DOCUMENTS. THE GENERAL DETAILS SHOWN ON THE DRAWINGS ARE CONCEPTUAL ONLY AND DO NOT INDICATE THE REQUIRED NUMBER OF BOLTS OR WELD SIZES, UNLESS SPECIFICALLY NOTED. ADVISE THE ENGINEER IMMEDIATELY IF THE INFORMATION ON THE DRAWINGS IS NOT SUFFICIENT FOR COMPLETE DESIGN OF CONNECTIONS.
5. THE FABRICATOR / ERECTOR SHALL SUBMIT TO THE ENGINEER FOR REVIEW, ENGINEERED AND CHECKED DRAWINGS SHOWING SHOP FABRICATION DETAILS, FIELD ASSEMBLY DETAILS AND ERECTION DIAGRAMS FOR ALL STRUCTURAL STEEL. WITH EACH SUBMITTAL OF SHOP DRAWINGS, THE FABRICATOR'S ENGINEER SHALL CERTIFY THAT THE CONNECTIONS HAVE BEEN DESIGNED IN ACCORDANCE WITH THE REQUIREMENTS OF THE AISC SPECIFICATIONS AND THE CONTRACT DOCUMENTS. CERTIFIED MILL TEST REPORTS SHALL ALSO BE SUBMITTED.
6. MINIMUM SHEAR CAPACITIES: CONNECTIONS SHALL BE DESIGNED FOR THE BEAM REACTIONS INDICATED. IN CASES WHERE REACTIONS ARE NOT INDICATED, PROVIDE AT LEAST ONE HALF OF THE UNIFORM LOAD CARRYING CAPACITY OF THE BEAM WITH THE ASSUMPTION OF FULLY BRACED COMPRESSION FLANGE.
7. THE DEPTH OF A SIMPLE SHEAR CONNECTION SHALL NOT BE LESS THAN ONE HALF OF THE NOMINAL DEPTH OF THE BEAM. THE MINIMUM NUMBER OF BOLTS PER CONNECTION SHALL BE TWO (2).
8. ALL BEAMS SHALL BE FABRICATED WITH THE NATURAL CAMBER UP. PROVIDE CAMBER, OR SHORING AS INDICATED ON THE DRAWINGS.
9. AFTER FABRICATION, ALL STEEL SHALL BE CLEANED OF ALL RUST, LOOSE MILL SCALE AND OTHER FOREIGN MATERIALS. STRUCTURAL STEEL SHALL BE HOT DIPPED GALVANIZED PER ASTM SPECIFICATIONS.
10. THERE SHALL BE NO FIELD CUTTING OF STRUCTURAL STEEL MEMBERS FOR THE WORK OF OTHER TRADES WITHOUT THE PRIOR APPROVAL OF THE ENGINEER..

DESIGN LOADS:

FLOOR LIVE LOADS – 150 PSF
WALKWAY – 100 PSF
ROOF LIVE LOAD – 30 PSF

ROOF SNOW LOADS –

P_g = 25 PSF

P_f = 18 PSF

C_e = 1.0

C_t = 1.0

L = 1.1

WIND DESIGN DATA –

BASIC WIND SPEED (3-SECOND GUST) = 90 MPH
ASCE 7-05
I_e = 1.15

EXPOSURE B
COMPONENTS & CLADDING = 25 PSF

EARTH QUAKE DESIGN DATA

OCCUPANCY CATEGORY = II
I_e = 1.25
S_S = 0.178 g

S_1 = 0.083 g

SITE CLASSIFICATION = D
S_{DS} = 0.204 g

S_{D1} = 0.133 g

SEISMIC DESIGN CATEGORY = C

ABBREVIATIONS:

A	ARCHITECTURAL	GAL	GALLON	PSI	POUNDS PER SQUARE INCH
ABBREV	ABBREVIATION	GALV	GALVANIZED	PT	POINT
ABDN	ABANDONED	GBT	GRAVITY BELT THICKENER	PV	PLUG VALVE
AC	TO BE ABANDONED, CAP OPEN END	GEN	GENERATOR	PVC	POLYVINYL CHLORIDE
ADF	AVERAGE DAILY FLOW	GLDIP	GLASS LINED DUCTILE IRON PIPE	PVMT	PAVEMENT
AE	ANALYZER ELEMENT	GND	GROUND	PVRV	PRESSURE VACUUM RELIEF VALVE
AFF	ABOVE FINISH FLOOR	GPM	GALLONS PER MINUTE	PW	POTABLE WATER
AGG	AGGREGATE	GPD	GALLONS PER DAY		
AIT	ANALYZER INDICATING TRANSMITTER	GRD	GRADE	R	RADIUS
AL	ALUMINUM, AIR LIFT	GRNDR	GRINDER	ROW	RIGHT-OF-WAY
ALUM	ALUMINUM SULFATE	GRTG	GRATING	RAS	RETURN ACTIVATED SLUDGE
ALT	ALTERNATE	GV	GATE VALVE	RCP	REINFORCED CONCRETE PIPE
APPROX	APPROXIMATE(LY)			RD	ROOF DRAIN
AR	AIR RELEASE	H	HIGH	RED	REDUCER; REDUCING
ARV	AIR RELEASE VALVE	HB	HOSE BIBB	REF	REFERENCE
ASPH	ASPHALT	HDG	HOT DIP GALVANIZED	REQD	REQUIRED
AVG	AVERAGE	HDPE	HIGH DENSITY POLYETHYLENE	REV	REVISION
		HDR	HEADER	RJ	RESTRAINED JOINT
B/	BOTTOM OF	HGT	HEIGHT	RLG	RAILING
BCV	BALL CHECK VALVE	HH	HANDHOLE	RM	ROOM
BF	BLIND FLANGE	HORIZ	HORIZONTAL	RND	ROUND
BFP	BELT FILTER PRESS	HP	HIGH POINT; HORSE POWER	RR	RAILROAD
BFV	BUTTERFLY VALVE	HR	HOUR	RS	RAW SEWAGE
BITUM	BITUMINOUS	HRT	HYDRAULIC RETENTION TIME	RSPS	RAW SEWAGE PUMP STATION
BLDG	BUILDING	HVAC	HEATING, VENTILATION & AIR CONDITIONING	RW	RAW WATER
BLV	BALL VALVE	HW	HOT WATER; HANDWHEEL	RWGV	RESILIENT WEDGE GATE VALVE
BLWR	BLOWER	HWL	HIGH WATER LEVEL		
BM	BENCHMARK			S	SOUTH; STAIRS; STRUCTURAL
BYP	BYPASS	ID	INSIDE DIAMETER	SAN	SANITARY
BPV	BACK PRESSURE VALVE	IN	INCH	SC	SCUM; SCREW CONVEYOR
BW	BACKWASH	INF	INFLUENT	SCFM	STANDARD CUBIC FEET/ MINUTE
		INSTR	INSTRUMENT(ATION)	SCH	SCHEDULE
CB	CATCH BASIN; CURB BOX	INSUL	INSULATION	SCRN	SCREEN
CC	CENTER TO CENTER	INV	INVERT	SEC	SECTION
CEB	CONCRETE EQUIPMENT BASE	IP	IRON PIPE	SF	SQUARE FEET
CF	CUBIC FEET; COMPRESSION FITTING			SFP	SLUDGE FEED PUMP
CL2	CHLORINE	JT	JOINT	SG	SLUICE GATE
CL2G	CHLORINE (GAS)			SHT	SHEET
CL2L	CHLORINE (LIQUID)	LAB	LABORATORY	SJ	SOLDERED JOINT; SWEATED JOINT
CL2S	CHLORINE (SOLUTION)	LAD	LADDER	SL	SLUDGE
CL2V	CHLORINE VENT	LAT	LATERAL	SLG	SLIDE GATE
CI	CAST IRON	LAV	LAVATORY	SM	STATIC MIXER
CISP	CAST IRON SOIL PIPE	LB	POUND	SMH	SANITARY MANHOLE
CL, ℄	CENTER LINE	LBS	POUNDS	SN	SUPERNATANT
CLR	CLEAR	LCP	LOCAL CONTROL PANEL	SOR	SURFACE OVERFLOW RATE
CMP	CORRUGATED METAL PIPE	LD	LEVEL TRANSDUCER	SP	SPACE(D); SAMPLE PORT
CMU	CONCRETE MASONRY UNIT	LE	LEVEL ELEMENT	SPEC	SPECIFICATION, SPECIFIED
CO	CLEANOUT	LF	LINEAR FEET	SPL	SAMPLE; SAMPLE LINE
CONC	CONCRETE, CONCENTRIC	LG	LONG	SQ	SQUARE
CPLG	COUPLING	LIT	LEVEL INDICATING TRANSMITTER	SR	SLUDGE RETURN
CPVC	CHLORINATED POLYVINYLCHLORIDE PIPE	LM	LEVEL TRANSMITTER	SS	STAINLESS STEEL
CSP	CORRUGATED STEEL PIPE	LP	LOW POINT	SSK	SERVICE SINK
CT	CONTACT TANK (PAA)	LR	LONG RADIUS	ST	STORM
CTW	CLOSE TO WALL	LS	LUMP SUM, LEVEL SWITCH	STA	STATION
CU	COPPER; CUBIC	LSH	LEVEL SWITCH HIGH	STD	STANDARD
CUP	CUPPER PIPE	LSL	LEVEL SWITCH LOW	STL	STEEL
CV	CHECK VALVE (SWING TYPE)	LT	LIGHT	SW	SOLVENT WELDED
CW	CHAINWHEEL; CLOCKWISE	LWL	LOW WATER LEVEL	SWK	SIDEWALK
CY	CUBIC YARDS			SWP	SCREENINGS WASHING PRESS
		M	MOTOR; MECHANICAL; METER	SY	SQUARE YARDS
D	DOOR	MATL	MATERIAL		
DEMO	DEMOLITION	MAX	MAXIMUM	T	TANK; TELEPHONE
DET	DETAIL	MBBR	MOVING BED BIOLOGICAL REACTOR	T/	TOP OF
DI	DUCTILE IRON	MBS	MANUAL BAR SCREEN	TBLV	TRUE UNION BALL VALVE
DIA	DIAMETER	MCC	MOTOR CONTROL CENTER	T&B	TOP AND BOTTOM
DIF	DIFFUSER	MECH	MECHANICAL	TD	TRENCH DRAIN
DIP	DUCTILE IRON PIPE	MFM	MAGNETIC FLOW METER	TE	TEMPERATURE ELEMENT
DISCH	DISCHARGE	MFR	MANUFACTURER	TEL	TELEPHONE
DN	DOWN	MFT	MAGNETIC FLOW TRANSMITTER	TEMP	TEMPERATURE; TEMPORARY
DO	DISSOLVED OXYGEN	MGD	MILLION GALLONS PER DAY	TIT	TEMPERATURE INDICATING TRANSMITTER
DP	DEEP	MH	MANHOLE	TF	TERTIARY FILTER
DR	DRAIN	MIN	MINIMUM	TP	TRANSFER PUMP
DS	DIGESTED SLUDGE	MISC	MISCELLANEOUS	THD	THREAD(ED)
DV	DIAPHRAGM VALVE	MJ	MECHANICAL JOINT	THK	THICK(NESS)
DWG	DRAWING	MLSS	MIXED LIQUOR SUSPENDED SOLIDS	TLV	TELESCOPING VALVE
		MON	MONUMENT	TOC	TOP OF CONCRETE
E	ELECTRIC(AL); EAST	MTD	MOUNTED	TWAS	THICKENED WASTE ACTIVATED SLUDGE
EA	EACH	MV	MUD VALVE	TYP	TYPICAL
ECC	ECCENTRIC				
EFF	EFFLUENT	N	NORTH	UH	UNIT HEATER
EJ	EXPANSION JOINT	NACL	SODIUM CHLORIDE	ULS	ULTRASONIC LEVEL SENSOR
EL	ELEVATION	NAOH	SODIUM HYDROXIDE	ULT	ULTRASONIC LEVEL TRANSDUCER
ENG	ENGINEER	NC	NORMALLY CLOSED	UN	UNION
EO	ELECTRIC OPERATOR	NO	NORMALLY OPEN; NUMBER	UNO	UNLESS NOTED OTHERWISE
EOP	EDGE OF PAVEMENT	NPT	NATIONAL PIPE THREAD (TAPER)	UV	ULTRAVIOLET
EQ	EQUAL(LY)	NPW	NON-POTABLE WATER		
EQPM	EQUIPMENT	NRS	NON-RISING STEM	V	VALVE
ES	EXTENDED STEM	NTS	NOT TO SCALE	VAC	VACUUM
ESMT	EASEMENT	NWL	NORMAL WATER LEVEL	VAR	VARIOUS; VARIABLE
EXH	EXHAUST			VB	VALVE BOX
EX	EXISTING	OC	ON CENTER	VCP	VITRIFIED CLAY PIPE
EXP	EXPANSION	OD	OUTSIDE DIAMETER; OXIDATION DITCH	VERT	VERTICAL
		OE	OVERHEAD ELECTRIC	VFD	VARIABLE FREQUENCY DRIVE
FBW	FILTER BACKWASH	OPNG	OPENING	VIF	VERIFY IN FIELD
FCE	FINAL CLARIFIER EFFLUENT	ORP	OXYGEN REDUCTION POTENTIAL	VLV	VALVE
FCO	FLOOR CLEANOUT	OU	OVERHEAD UTILITY	VOL	VOLUME
FD	FLOOR DRAIN	OVF	OVERFLOW	VSD	VARIABLE SPEED DRIVE
FDC	FIRE DEPARTMENT CONNECTION			VT	VENT
FDN	FOUNDATION	P	PUMP	VTR	VENT THROUGH ROOF
FDS	FLOW DIVERSION STRUCTURE	PAA	PEROXYACETIC ACID		
FE	FLOW ELEMENT	PC	POINT OF CURVE	W	WINDOW; WIDE; WEST
FES	FLARED END SECTION	PCC	PORTLAND CEMENT CONCRETE	W/	WITH
FF	FINISHED FLOOR	PCCP	PRESSURE CONCRETE CYLINDER PIPE	W/O	WITHOUT
FH	FIRE HYDRANT	PD	PUMP DISCHARGE	WAS	WASTE ACTIVATED SLUDGE
FIN	FINISH(ED)	PDF	PEAK DAILY FLOW	WC	WATER CLOSET
FIT	FLOW INDICATING TRANSMITTER	PE	PLAIN END	WH	WATER HEATER
FL	FLANGE(D); FLUSHING CONNECTION	PERF	PERFORATED	WJ	WELDED JOINT
FLD	FLOOD	PFD	PROCESS FLOW DIAGRAM	WL	WATER LEVEL
FLEX	FLEXIBLE	PFU	POLYMER FEED UNIT	WM	WATER MAIN
FLR	FLOOR	PG	PRESSURE GAUGE	WT	WEIGHT
FM	FORCEMAIN; FLOW METER	PHF	PEAK HOURLY FLOW	WTP	WATER TREATMENT PLANT
FNPT	FINE NATIONAL PIPE THREAD	PHOS	PHOSPHATE	WW	WASTEWATER
FP	FIRE PROTECTION	PI	PRESSURE INDICATOR	WWTP	WASTEWATER TREATMENT PLANT
FRP	FIBERGLASS REINFORCED PLASTIC	PL	PLATE; PROPERTY LINE		
FS	FLOW SWITCH/FLOAT SWITCH	PLC	PROGRAMMABLE LOGIC CONTROLLER	XFER	TRANSFER
FT	FOOT/FEET	POLY	POLYMER		
FTG	FOOTING	PP	POWER POLE	YD	YARD
FUT	FUTURE	PR	PROCESS	YH	YARD HYDRANT
		PROP	PROPOSED	YV	YARD VALVE
G	NATURAL GAS; GATE; GENERAL	PRV	PRESSURE RELIEF VALVE		
		PS	PUMP STATION		

PROCESS AND SHEET LEGEND:

SECTION
X = SHEET WHERE SECTION IS REFERENCED
Y = SHEET WHERE SECTION IS SHOWN
1 = SECTION NUMBER

DETAIL
X = SHEET WHERE DETAIL IS REFERENCED
Y = SHEET WHERE DETAIL IS SHOWN
Z = DETAIL LETTER

PROCESS LINE
AIR LINE
WATER LINE
POLYMER LINE
BUILDING OR AREA LIMITS
DIRECTIONAL FLOW ARROW

FLANGED GATE VALVE
FLANGED PLUG VALVE
FLANGED BUTTERFLY VALVE
FLANGED GLOBE VALVE
FLANGED CHECK VALVE
FLANGED KNIFE GATE VALVE
BALL VALVE

REDUCER AND SIZE
MAGNETIC FLOW METER
PRESSURE GAUGE
BLOWER
PUMP

BY	DATE	REVISION
BY		
A	07/30/2020	PERMIT SET

21 DESIGN GROUP INC.
1351 Jefferson, Suite 301
Washington, MO 63090
mail@21designgroup.net
P: 636-432-5029

PROCESS NOTES, ABBREVIATIONS AND LEGENDS

BROCKLYN WWTF
HAGER DRIVE
RICHMOND, KY

ENGINEERING CERTIFICATE OF AUTHORITY NO. 4808
ENGINEERING LICENSE:
BENJAMIN J. KUENZEL, PE33718

STATE OF KENTUCKY
BENJAMIN J. KUENZEL
33718
LICENSED PROFESSIONAL ENGINEER

SEAL DATE:	07/30/2020
DRAWN BY:	DDG
PROJ NUMBER:	0542-19
DATE:	07/25/2020
DRAWING NO:	P3

ALL RIGHTS RESERVED. All "21 Design Group, Inc." plans, specifications and drawings are protected under copyright law and no part may be copied, reproduced, displayed publicly, used to create derivatives, distributed, stored in a retrieval system or transmitted in any form by any means without prior written permission of "21 Design Group, Inc."

NOTES:
1. DIMENSIONS BASED ON PRECAST UNITS HAVING 12" WALLS AND 6" TOP SLABS, WHERE APPLICABLE. CONTRACTOR TO ADJUST DIMENSIONS ACCORDINGLY.
2. SEE DRAWING P5 FOR LOWER PLAN.
3. PROVIDE PIPE SUPPORTS AS REQUIRED. SUPPORT LOCATIONS AND TYPES ARE SUBJECT TO ENGINEER'S APPROVAL.

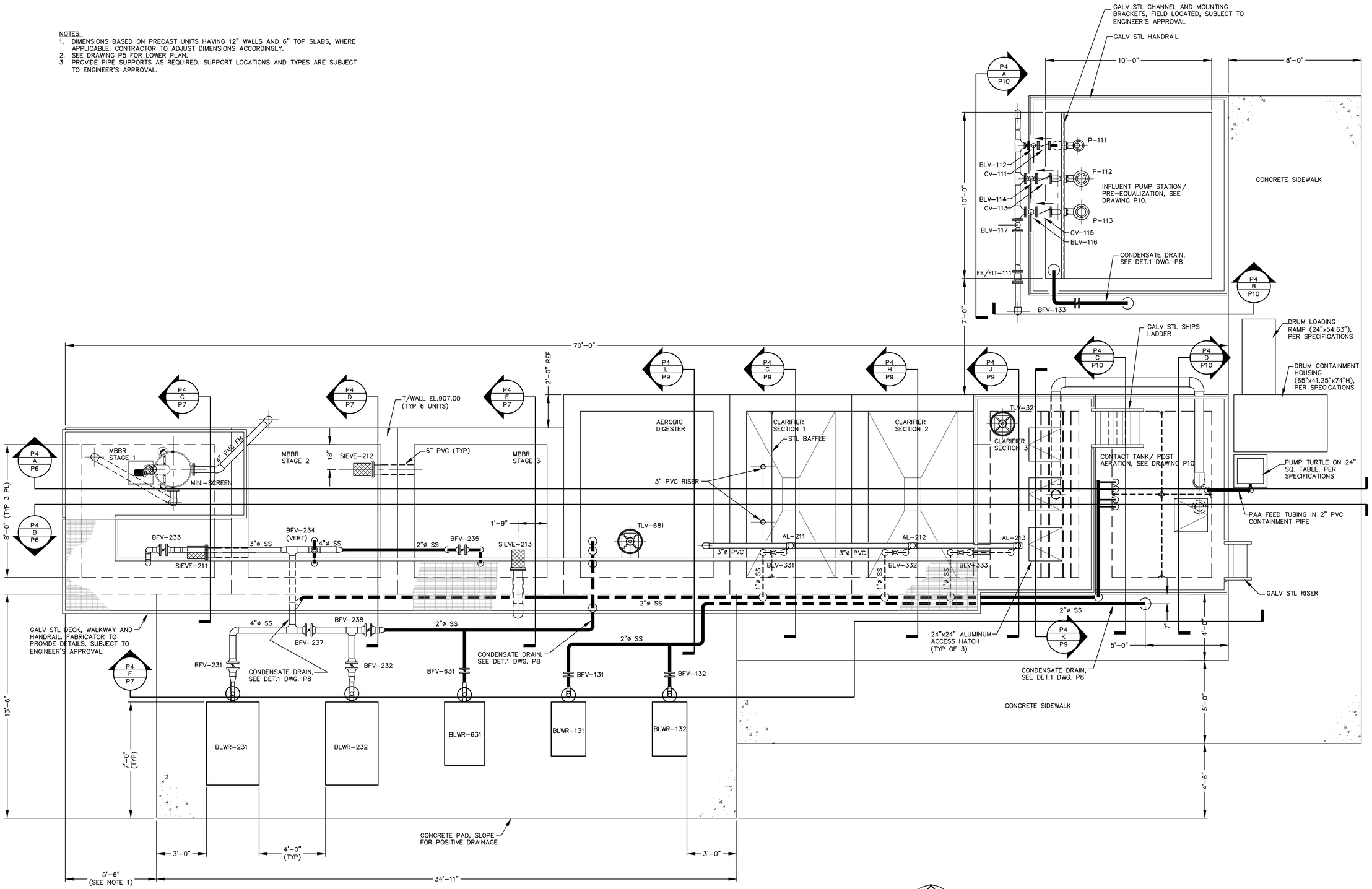

PROCESS UPPER PLAN (ABOVE EL. 901.00)
SCALE: 3/8" = 1'-0"

#	DATE	REVISION	BY
A	07/30/2020	PERMIT SET	BY

21 DESIGN GROUP INC.
1351 Jefferson, Suite 301
Washington, MO 63090
mail@21designgroup.net
P: 636-432-3029

PROCESS UPPER PLAN (ABOVE EL.901.00)

BROCKLYN WWTF
HAGER DRIVE
RICHMOND, KY

ENGINEERING CERTIFICATE OF AUTHORITY NO. 4808
ENGINEERING LICENSE: BENJAMIN J. KUENZEL, PE33718

STATE OF KENTUCKY BENJAMIN J. KUENZEL 33718 LICENSED PROFESSIONAL ENGINEER

SEAL DATE:	07/30/2020
DRAWN BY:	DDG
PROJ NUMBER:	0542-19
DATE:	07/23/2020
DRAWING NO:	P4

ALL RIGHTS RESERVED. All "21 Design Group, Inc." plans, specifications and drawings are protected under copyright law and no part may be copied, reproduced, displayed publicly, used to create derivatives, distributed, stored in a retrieval system or transmitted in any form by any means without prior written permission of "21 Design Group, Inc."

BAR IS ONE INCH ON OFFICIAL DRAWINGS. 0 1" IF NOT ONE INCH, ADJUST SCALE ACCORDINGLY.

NOTES:
1. DIMENSIONS BASED ON PRECAST UNITS HAVING 12" WALLS AND 6" TOP SLABS, WHERE APPLICABLE. CONTRACTOR TO ADJUST DIMENSIONS ACCORDINGLY.
2. SEE DRAWING P4 FOR UPPER PLAN.
3. PROVIDE PIPE SUPPORTS AS REQUIRED. SUPPORT LOCATIONS AND TYPES ARE SUBJECT TO ENGINEER'S APPROVAL.
4. DRUM LOADING RAMP, DRUM CONTAINMENT HOUSING, AND TURTLE PUMP ON 24" SQUARE TABLE NOT SHOWN FOR CLARITY, SEE DRAWING P4 FOR INFORMATION.

DIFFUSER DESCRIPTIONS:
DIF-231 3"ø SS HDR; (14) 1"ø x 3'-0" LG LATERALS, (4) ¼" ORIFICES ON 9" CENTERS PER LATERAL
DIF-232 2 ½"ø SS HDR, (10) 1"ø x 3'-0" LG LATERALS, (4) ¼" ORIFICES ON 9" CENTERS PER LATERAL.
DIF-233 2"ø SS HDR, (6) 1"ø x 3'-0" LG LATERALS, (4) ¼" ORIFICES ON 9" CENTERS PER LATERAL.
DIF-631 (4) 2"ø LATERALS, (4) FLEX CAP DIFFUSERS EQ SPACED EACH LATERAL
DIF-431, 432, 433, 434 1"ø SS HDR, (1) 1"ø x 4'-0" LG LATERAL (EACH DIF), (4) ¼" ORIFICES ON 1'-0" CENTERS PER LATERAL
(NOTE: FOR INFLUENT PUMP STATION DIFFUSER INFORMATION SEE DRAWING P10)

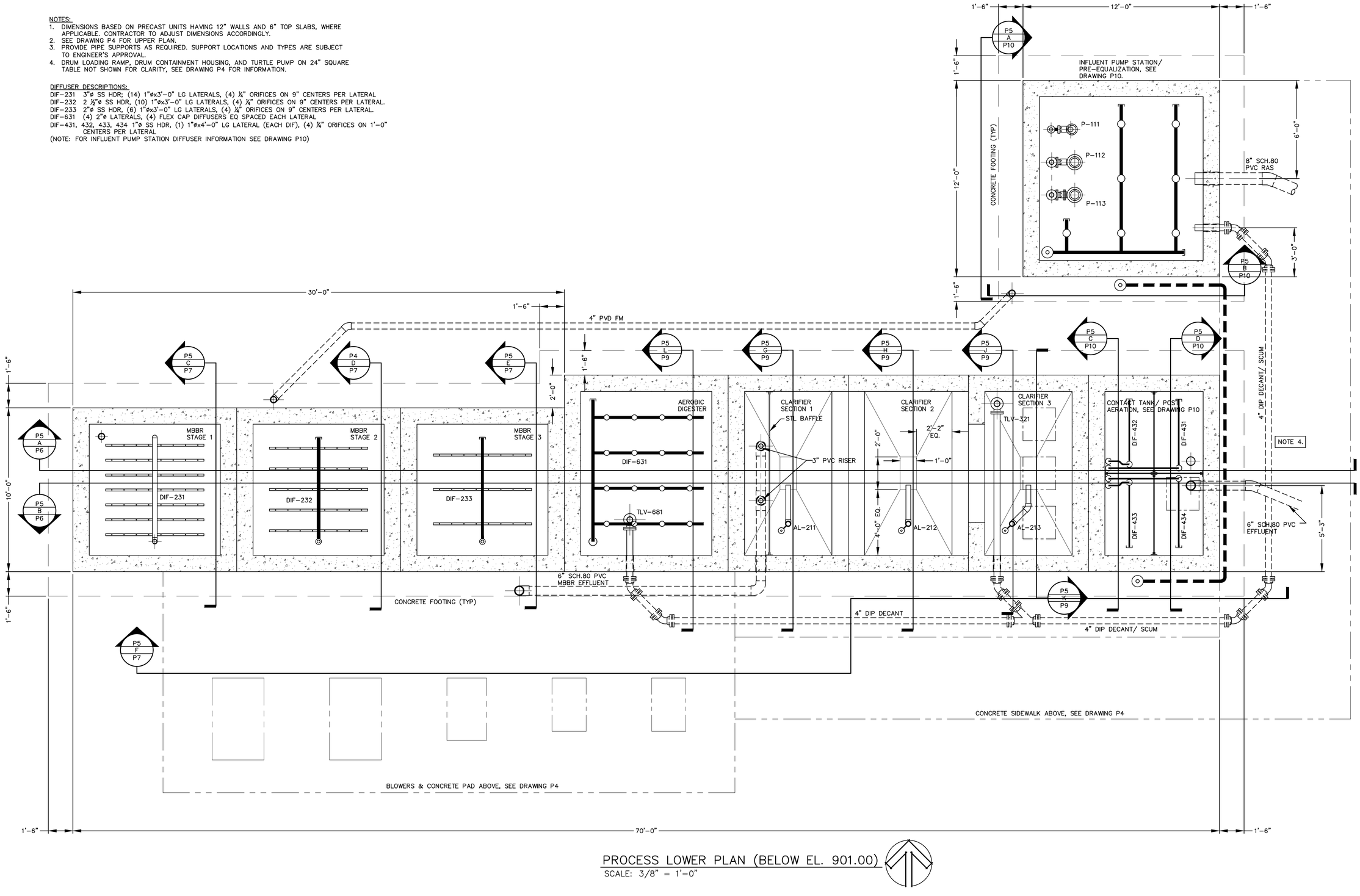

PROCESS LOWER PLAN (BELOW EL. 901.00)
SCALE: 3/8" = 1'-0"

BY	DATE	REVISION
BY	07/30/2020	PERMIT SET
A		

21 DESIGN GROUP INC.
1351 Jefferson, Suite 301
Washington, MO 63090
mail@21designgroup.net
P: 636-432-3029

PROCESS LOWER PLAN (BELOW EL.901.00)

BROCKLYN WWTF
HAGER DRIVE
RICHMOND, KY

ENGINEERING CERTIFICATE OF AUTHORITY NO. 4808
ENGINEERING LICENSE: BENJAMIN J. KUENZEL, PE33718

STATE OF KENTUCKY
BENJAMIN J. KUENZEL
33718
LICENSED PROFESSIONAL ENGINEER

SEAL DATE:	07/30/2020
DRAWN BY:	DDG
PROJ NUMBER:	0542-19
DATE:	07/23/2020
DRAWING NO:	P5

ALL RIGHTS RESERVED. All "21 Design Group, Inc." plans, specifications and drawings are protected under copyright law and no part may be copied, reproduced, displayed publicly, used to create derivatives, distributed, stored in a retrieval system or transmitted in any form by any means without prior written permission of "21 Design Group, Inc."

BAR IS ONE INCH ON OFFICIAL DRAWINGS. 0 1" IF NOT ONE INCH, ADJUST SCALE ACCORDINGLY.

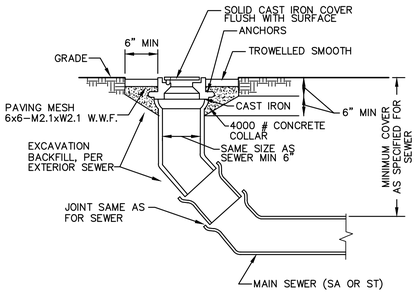

TYPICAL YARD CLEANOUT

SCALE: N.T.S.

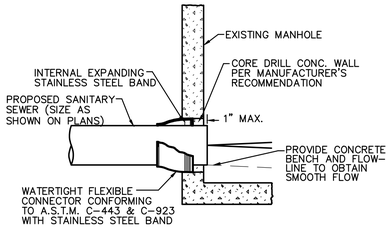

PIPE TO MANHOLE CONNECTION

SCALE: N.T.S.

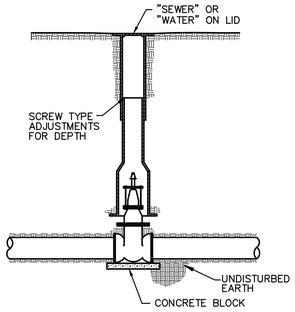

TYPICAL VALVE BOX INSTALLATION

SCALE: N.T.S.

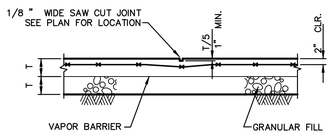

TYPICAL SLAB ON GRADE CONTROL JOINT

SCALE: N.T.S.

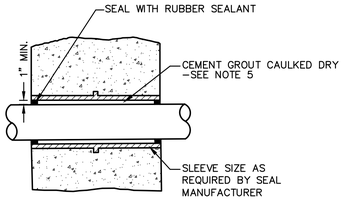

P-1

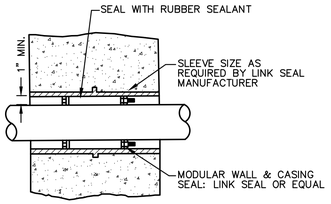

P-2

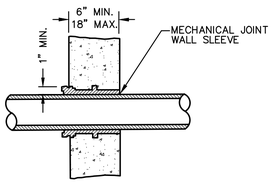

P-3

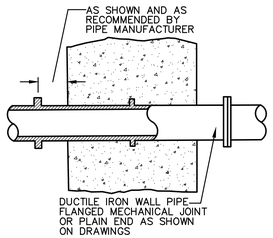

P-4

	PIPE MATERIAL			
CONDITION	STEEL	COPPER	PVC	IRON
EARTH TO PASSAGE	N/A	P-1	P-2	P-3
LIQUID TO PASSAGE	P-2	N/A	P-2	P-4
LIQUID TO EARTH	P-2	N/A	P-2	P-4
PASSAGE TO PASSAGE	P-1	P-1	P-1	P-1
LIQUID TO LIQUID	P-2	N/A	P-2	P-4

P-2 MAY BE USED IN LIEU OF P-1 AND P-3.

P-4 MAY BE USED IN LIEU OF P-3 AND IF CALLED FOR ON THE DRAWINGS P-4 SHALL BE USED IN LIEU OF P-3.

NOTES:

1. WHERE PIPES PASS THROUGH WALLS, FLOORS, OR CEILINGS, THE METHOD USED SHALL CONFORM TO THE STANDARD DETAILS AS SHOWN ON THIS DRAWING, EXCEPT WHERE SPECIAL DETAILS ARE SHOWN.
2. PASSAGE SHALL MEAN ANY ROOM, GALLERY, TUNNEL OR SIMILAR ENCLOSED SPACE IN WHICH PIPES RUN.
3. ALL SLEEVES SHALL BE CAST IRON UNLESS OTHERWISE NOTED.
4. FLANGES MAY BE INSTALLED FLUSH WITH WALL AND TAPPED FOR STUDS.
5. CEMENT GROUT CAULKING MAY BE ELIMINATED FOR PASSAGE TO PASSAGE PENETRATIONS.
6. LIQUID SHALL MEAN AN ELEVATION 1'-6" ABOVE MAXIMUM WATER ELEVATION.

PIPE THROUGH WALLS DETAILS

SCALE: N.T.S.

MMP	MISSION MONITORING WELL
CP-111	INFLUENT PUMP STATION CONTROL PANEL
CP-112	MINI-SCREEN CONTROL PANEL
CP-131	PRE-AERATION BLOWER PANEL
CP-231	MBBR BLOWER PANEL
CP-631	AEROBIC DIGESTER BLOWER PANEL
DP	DISTRIBUTION PANEL
TS	TRANSFER SWITCH
MD	MAIN DISCONNECT (200A)

① 120V GFCI RECEPTACLE IN WEATHERPROOF BOX ON UNISTRUT.

② TWO SETS OF LED DOUBLE ADJUSTABLE HEAD LIGHTS MOUNTED ON 6"x6" CCA TIMBER AT 8 FT. OFF GROUND. COORDINATE FIELD LOCATION FOR INSTALLATION W/ENGINEER FOR ONE AT CONTROL CENTER & ONE AT INFLUENT PUMP STATION.

③ 120V SINGLE POLE SWITCH IN WEATHERPROOF BOX.

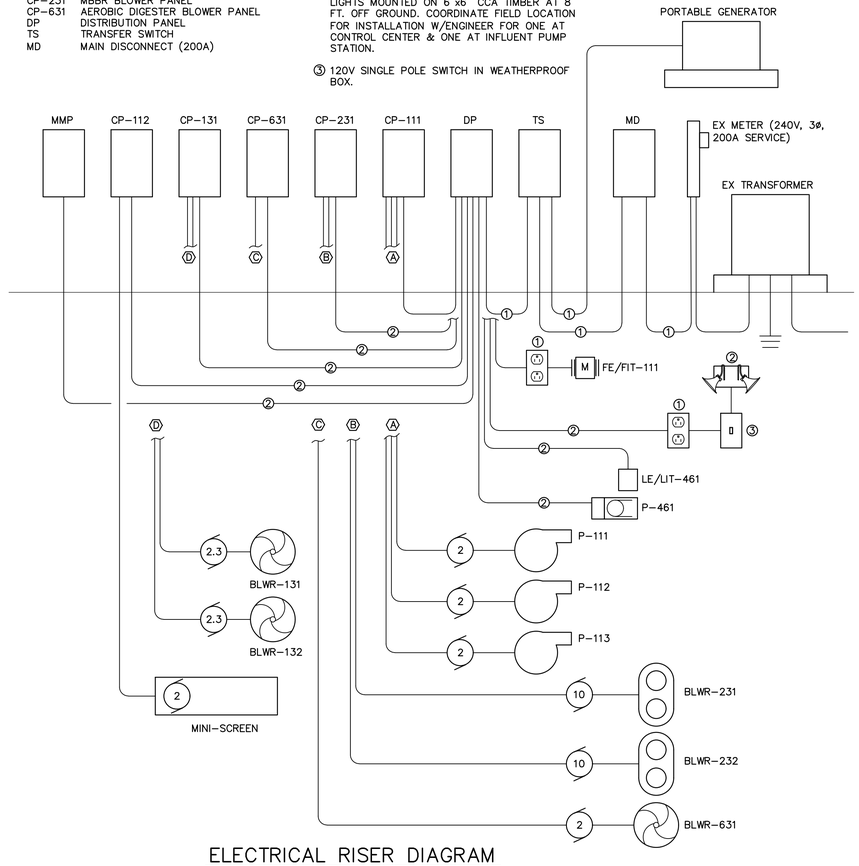

ELECTRICAL RISER DIAGRAM

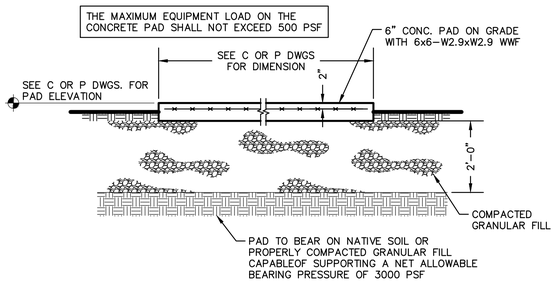

TYPICAL EXTERIOR EQUIPMENT PAD ON GRADE

SCALE: N.T.S.

ELECTRICAL RISER DIAGRAM NOTES:

1. CONTRACTOR IS REQUIRED TO INSPECT EXISTING ELECTRICAL SYSTEM, VERIFY EXISTING METER SIZE, AND VERIFY WIRE, CONDUCTOR AND CONDUIT SIZING REQUIREMENTS PRIOR TO SUBMITTING BID.
2. CONTRACTOR TO SUBMIT ELECTRICAL LAYOUT AND DESIGN TO ENGINEER FOR APPROVAL PRIOR TO ORDERING MATERIALS.
3. IT IS THE CONTRACTOR'S RESPONSIBILITY TO INSTALL ALL ELECTRICAL EQUIPMENT NECESSARY FOR THE ENTIRE PROJECT INCLUDING ANY TRANSFORMER NEEDS.
4. IT IS THE CONTRACTOR'S RESPONSIBILITY TO INSTALL ALL INSTRUMENTATION AND CONTROL PANELS NECESSARY FOR THE ENTIRE PROJECT.
5. UNISTRUT TO BE PROVIDED AS NEEDED TO INSTALL ALL ELECTRICAL AND CONTROL PANEL EQUIPMENT.
6. ALL CONDUIT SHALL BE SIZED AND PROVIDED BY CONTRACTOR. CONDUIT AND CONDUIT SIZING SHALL MEET ALL NEC CODE REQUIREMENTS FOR ABOVE AND BELOW GRADE INSTALLATION.
7. ALL WIRE AND CONDUCTORS SHALL BE ENCLOSED IN CONDUIT.
8. ALL WIRE SHALL BE COPPER EXCEPT ALUMINUM WILL BE ALLOWED UP TO THE DISTRIBUTION PANEL.

REMOTE WIRELESS MONITORING AND CONTROL REQUIREMENTS:

REMOTE WIRELESS MONITORING UNIT SHALL BE M850 SERIES UNIT PROVIDED BY MISSION COMMUNICATIONS (SALES REPRESENTATIVE IS JEFF CLARKE WITH HYDRO-KINETICS; 314-647-6104).

1. DIGITAL INPUTS
   a. P-111 RUN; P-111 FAIL
   b. P-112 RUN; P-112 FAIL
   c. P-113 RUN; P-113 FAIL
   d. P-461 RUN; P-461 FAIL
   e. BLWR-231 RUN; BLWR-231 FAIL
   f. BLWR-232 RUN; BLWR-232 FAIL
2. ANALOGUE INPUTS
   a. LE/LIT-461 LEVEL (PAA STORAGE LEVEL)
   b. FE/FIT-111 FLOW (INFLUENT METER)
   c. BLWR-231 SPEED
   d. BLWR-232 SPEED

#	DATE	REVISION	BY
A	07/30/2020	PERMIT SET	BT

21 DESIGN GROUP INC.
1351 Jefferson, Suite 301
Washington, MO 63090
mail@21designgroup.net
P: 636-432-5029

CONTACT TANK/ POST AERATION PLAN AND SECTIONS

BROCKLYN WWTF
HAGER DRIVE
RICHMOND, KY

ENGINEERING CERTIFICATE OF AUTHORITY NO. 4808
ENGINEERING LICENSE:
BENJAMIN J. KUENZEL, PE33718

STATE OF KENTUCKY
BENJAMIN J. KUENZEL
33718
LICENSED PROFESSIONAL ENGINEER

SEAL DATE:	07/30/2020
DRAWN BY:	DDG
PROJ NUMBER:	0542-19
DATE:	07/23/2020
DRAWING NO:	P8

ALL RIGHTS RESERVED. All "21 Design Group, Inc." plans, specifications and drawings are protected under copyright law and no part may be copied, reproduced, displayed publicly, used to create derivatives, distributed, stored in a retrieval system or transmitted in any form by any means without prior written permission of "21 Design Group, Inc."