KENTUCKY-AMERICAN WATER COMPANY
CASE NO. 2012-00096
COMMISSION STAFF'S FIRST REQUEST FOR INFORMATION

Witness: Lance Williams

1. Provide all studies and reports that Kentucky-American prepared or commissioned since January 1, 2006 that review or discuss the operation of the Owenton Water Treatment Plant. Omit the "Engineering Feasibility Study Report" that was appended to Kentucky-American's Application.

Response:

In addition to the "Engineering and Feasibility Study Report," KAW contracted with Strand Associates, Inc. to complete the following studies and reports since January 1, 2006:

- Owenton Water Treatment Plant Preliminary Design Report
- Owenton Water Treatment Plant Chemical Feed System Improvements and Chlorine Scrubber
- Owenton, Kentucky, Water Treatment Plant Improvements

Report for
Kentucky American Water

Owenton Water Treatment Plant
Preliminary Design Report

Prepared by:

STRAND ASSOCIATES, INC.®
1525 Bull Lea Road, Suite 100
Lexington, KY 40511
www.strand.com

September 6, 2006

STRAND ASSOCIATES, INC.® ENGINEERS

1. SUMMARY OF SCOPE

The project includes the following major components. A separate set of drawings and specifications will be provided for each component.

1. Install a high service Venturi flow meter.
2. Provide for improvements to disinfection facilities.
3. Provide bulk storage and chemical addition improvements for various chemicals.

2. INSTALL A HIGH SERVICE VENTURI FLOW METER

A Venturi meter will be installed in the existing 14" high service discharge line. The meter will be installed in a separate below-grade vault. A differential pressure transducer and circular recorder are located in the filter building.

3. PROVIDE FOR IMPROVEMENTS TO DISINFECTION FACILITIES

The current disinfection by free chlorine will be modified to reduce the production of disinfection by-products (DBPs) in the distribution system. Free chlorine will continue to provide primary disinfection. Prior to distribution through the high service pumps, anhydrous ammonia will be utilized in a solution-feed system. The resulting chloramine compounds will reduce the production of DBPs while providing adequate residual disinfection in the distribution system.

An existing room currently used for storage and feed of chlorine gas will be subdivided into four rooms. Ammonia storage, ammonia feed equipment, chlorine storage, and chlorine feed equipment will each be stationed in separate rooms. Gas under pressure will be located in the storage rooms only. Vacuum regulators at the gas cylinders will enable the feed lines to operate under vacuum. Controls for lighting and ventilation, as well as alarms for the gas leak sensors, will be located outside each of the rooms. Windows will allow each of the rooms to be inspected visually by personnel without requiring entry.

The existing structure will require demolition work, including but not limited to, the following as shown in the Demolition Plan on Sheet 2 of the plan set:

- Removal of an external door and frame, an internal window and frame, and external wall masonry.
- Removal of existing chlorination equipment, controls, piping and related appurtenances
- Removal of existing HVAC equipment, controls, and appurtenances.
- Removal of existing electrical equipment, devices, conduit, conductors, and appurtenances.
- Remove existing crane rail, supports, hoist, controls and appurtenances.
- Remove existing concrete slab and drain piping as required for proposed construction.

Proposed construction includes, but is not limited to:

- Provide and install block and brick masonry to match existing masonry for proposed exterior door openings.
- Provide and install exterior metal doors, frames, and hardware.
- Provide and install 6" block interior walls as indicated on the plans.
- Provide and install interior metal doors, frames, and hardware.
- Provide and install floor drain, fittings, piping, and couplings as required.
- Provide fluorescent lighting in each of the new rooms.

Two application points are currently utilized for free chlorine addition, and the proposed disinfection design will retain these points. Chlorine is added first as an intermediate addition prior to the filter. The second is to ensure residual chlorine and is located prior to the basement pumpwell. Current feed rates are 5-8 lb/day above the filter to achieve approximately 1-1.5 ppm, and 11-15 lb/day at the basement pumpwell to achieve 1.7-2.8 ppm, based on a review of 12 months of MORs.

A dual digital scale will hold two scales equipped with a vacuum regulating valve and automatic switchover capability. The regulating valve will provide a pair of effluent lines, each to a chlorinator rotameter and injector for the two application points. The two chlorine cylinders will remain online at all times. The line from the cylinders in the storage room to the chlorinator and injector in the feed room shall be under vacuum.

Feed rates at the top of filter shall range from 3.0 lb/day to 50 lb/day (or 0.125 lb/hr to 4.2 lb/hr with a conservative estimate of daily operating times) with a typical rate of 12 lb/day. The chlorine applied at the high service pumps is a post filtration addition and the chlorinator will have a feed rate capacity identical to the first chlorinator.

Additionally, the injector supply water shall be softened through a 40 GPM capacity softener in order to reduce the risk of mineral precipitation in the solution line. This softened water shall feed the ammoniator and the future caustic feed line as well.

Each of the chlorine operating rooms will be constructed with a vapor sensor at floor level near the on-line cylinders linked to an alarm horn and indicator light housed at the entrance doors to each room. A fan providing air exchange at one room volume per minute and louvers over the external door will provide ventilation. Individual corrosion resistant electric unit heaters will be provided in each room. Control switches for the lights and fan will be located in the equipment feed room.

4. PROVIDE FOR AMMONIATION

The ammoniator will be similar in design to the chlorinators. Two of the newly subdivided rooms will be required for ammoniation, one for storage and one for feed equipment.

The application points of ammonia will be at the suction of the high service pumps out to the distribution system. The design used conservative estimates of flowrate and retained volume in the pumpwell and the clearwell, and a target of residual chlorine of 2 mg/L.

The plant has two storage structures, and based on a review of existing data, the plant maintains a minimum of 80,000 gallons in the two structures combined. Kentucky American uses a baffling factor of 0.74 for the two structures combined.

CT requirements for chloramination are orders of magnitude greater than CT requirements for chlorine, so the design uses chlorine for initial 'shock' disinfection, and ammonia is added prior to distribution for residual disinfection. This design intends to provide sufficient disinfection while minimizing production of disinfection byproducts. With a recommended dosing ratio of 4:1 for chlorine to ammonia, and a target concentration of chlorine of 2 mg/L, the design is for an average concentration of ammonia applied at 0.5 mg/L. With a range of flowrates and chemical concentrations, equipment will be selected capable of delivering 0.9 lb/day to 12.5 lb/day of ammonia, with an average of 3.1 lb/day.

Ammonia will be applied at the high service pumps to provide residual chloramine disinfection. Chlorine is first applied at the top of filter, and disinfection with the free chlorine will occur in the pumpwell and clearwell. Chloramination will occur in the distribution line, reducing disinfection byproducts. Ammonia will be applied through a corporation stop that will be manually opened when the high service pumps are manually engaged. This operations procedure will be established so that ammonia will be applied only in the distribution lines and chloramination will not occur in the storage structures

Each of the ammonia rooms will be constructed with a vapor sensor near the ceiling above the on-line cylinders and an alarm housed in the equipment feed room. A fan providing air exchange at one room volume per minute and louvers over the external door will provide ventilation. Individual corrosion resistant electric unit heaters will be provided in each room. Control switches for the lights and fan will be located in the equipment feed room. Additionally, the injector supply water will be softened in order to reduce the risk of mineral precipitation in the solution line.

5. PROVIDE FOR BULK STORAGE AND OTHER IMPROVEMENTS TO CHEMICAL FEED SYSTEMS

Additionally, bulk storage of other chemicals, will be moved to a newly constructed building south of the existing plant. Transfer pumps will transfer the chemicals from bulk storage to day tanks within the existing WTP, and metering pumps will apply the chemicals to the existing points in the treatment process.

a. New facility for bulk storage

A new storage building will be constructed south of the existing plant. The new building, constructed on a slab of masonry walls, will have five separate rooms for the five chemicals to be stored there: fluoride, ferric chloride, caustic soda, sulfuric acid, and a corrosion inhibitor. The building will be insulated and will be equipped with electricity for lights, HVAC, and pumping controls.

Chemical storage will be in single wall polyethylene tanks, and secondary containment will be provided by a 3-ft block retaining wall in each room. To provide the bulk storage capacity required for ferric chloride, a room with a pair of 3000-gallon tanks is recommended. Each of the other chemicals is recommended to have a 1000-gallon tank.

The back wall of each room will be provided with an insulated wall panel sized to allow passage of the bulk storage tanks (for placement and removal as needed). The front wall to each room will contain an access door as well as a quick connect. Providing containment in this way is more cost effective than purchasing double-walled tanks, but does increase the footprint of the building. The access door will open to the area of the room outside the containment area, and this area is where the transfer pump will be placed.

Chemicals will be transferred by supplier via a quick connect at each containment room. The quick connect will be protected by a lockable cover. A sump will be located below each quick connect. The sumps will be isolated to protect the chemicals from combining.

b. Bulk tanks

Hydrofluorosilicic acid, caustic soda, sulfuric acid, and the corrosion inhibitor will be housed in 1000-gallon tanks that measure 64" D by 81" H. The budgetary price is $1,400 freight-on-board (FOB). The ferric chloride will be stored in a pair of 3000-gallon tanks, each measuring 95" D by 118" H at a budgetary price of $3,300 FOB. For reference, the double-walled tanks are priced at $3,300 for 1000-gal tank and $7,900 for 3,000-gal tank.

c. Transfer to existing WTP

Chemicals will be transferred to the existing WTP, where they will be applied to the system from smaller day tanks. A transfer pump will be placed in each containment room of bulk storage. At each day tank, an operator will utilize a switch to fill from the bulk tank. The switch will be a pushbutton contact device, requiring that the operator continually engage the switch to keep the pump on, or conversely, if the operator lets off the switch, the pump stops. Each day tank will be on a scale, allowing the operator to note when the day tank is full and disengage the contact switch.

Transfer pipes from the bulk storage facility to the chemical feed rooms of the existing WTP will run through a proposed carrier trench just below grade and covered by a steel plate cap.

Tank sizes and feed rates for the chemicals are as follows:

Chemical	Day tank size (gal)	Average daily feed (gal)
Hydrofluorosilicic acid	20	4.4
Corrosion inhibitor	10	2.68
Caustic soda	10	2.7
Sulfuric acid	10	?
Ferric chloride	250	250

d. Metering pumps

From the day tanks, metering pumps will apply each of the chemicals to the application point. The current piping configuration is sufficient for application of these chemicals. The day tanks will each be placed in a masonry curb capable of 100% containment of the full tank volume.

Chemical	Minimum and Maximum feed rates required (gph)	Pump manufacturer and model	Max pump rate(gal/hr)	Max turndown
Hydrofluorosilicic acid	0.09-0.56	JAC MAGDOS DE/DX Model 2	0.5	100%
Corrosion inhibitor	0.05-0.31	LMI Model AA	0.58	80%
Caustic soda	0.001-0.430	LMI Model AA	0.58	80%
Sulfuric acid	0.005-0.037	LMI Model AA	0.58	80%
Ferric chloride	2.19-23.1	JAC MAGDOS DE/DX Model 100	27.7	100%

e. Controls

A number of new controls will be added to accommodate these improvements. Level indicating lights will be placed at the quick connect so that the chemical supplier will know when the bulk tanks are full. The transfer pumps will operate from contact pushbutton switches at the day tanks, so that the operator must manually engage the switch while the pump is on. The day tanks will have a float switch set for high level alarm to override the contact switch. Each day tank and online cylinder will be located on a scale with a digital readout of weight.

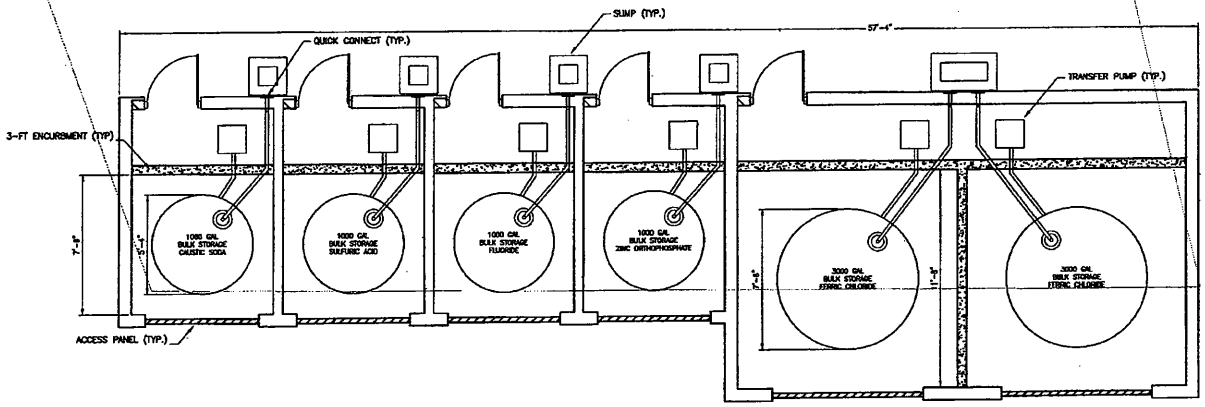

PROPOSED CONSTRUCTION PLAN

0 1' 2' 4'

NO. | REVISIONS | DATE:

DATE: AUGUST, 2006
DES BY: RDV CHK BY: MLD
RECORD DRAWING
BY:
DATE:
CONTRACTOR:

BULK STORAGE FACILITY
PLAN VIEW
KENTUCKY AMERICAN WATER
OWENTON WATER TREATMENT PLANT UPGRADE PART 3
CHLORINE ROOM MODIFICATIONS
OWEN COUNTY, KENTUCKY

STRAND ASSOCIATES, INC.® ENGINEERS

SHEET XX
01-ASME-01
JOB NO. 2-493.079

File: S:\05\451--500\493\079\Acad\Bulk Storage.dwg Time: Sep 05, 2006 - 8:37am

STRAND
ASSOCIATES, INC.®
ENGINEERS

Waterfront Plaza
Suite 710
325 West Main Street
Louisville, KY 40202
Phone: 502-583-7020
Fax: 502-583-7026

Office Locations

Madison, WI
Joliet, IL
Louisville, KY
Lexington, KY
Mobile, AL
Columbus, IN
Columbus, OH
Indianapolis, IN
Milwaukee, WI
Cincinnati, OH

www.strand.com

August 29, 2008

Jason Hurt, P.E., Project Manager
Kentucky American Water
2300 Richmond Road
Lexington, KY 40502

Re: Owenton Water Treatment Plant Chemical Feed System Improvements and Chlorine Scrubber
Budgetary Opinion of Probable Cost and Design Summary

Strand Associates, Inc. was retained by Kentucky American Water (KAW) to develop a set of 70 percent drawings and opinion of probable cost for improvements to the Owenton Water Treatment Plant. This letter provides a summary of the design improvements and associated cost. The actual drawings of the design improvements will be provided by September 15, 2008 as established by Amendment No. 1.

Please note that if construction occurs far beyond the date of this letter, costs will need to be reevaluated because of the price volatility in the construction industry. The cost opinion discussed in this letter is based on the following items:

- September 2006 Preliminary Engineering Report (PER).
- Requested changes in scope as indicated in Amendment No. 1.
- Proposed Design Criteria letter dated July 9, 2008.
- Powder Activated Carbon Feed Evaluation dated July 9, 2008.
- Site Plan and Building Plan Review meeting on August 4, 2008.
- Additional correspondence with KAW.

As requested, the budgetary cost opinion was broken into four main categories:

1. Access Road Improvements.
2. Chemical Building.
3. Chlorine Scrubber.
4. Existing Building Improvements.

Although listed separately, these costs were developed with the intent of a single construction contract. The enclosed table is a summary of the August 2008 budgetary cost opinion.

In addition, KAW requested that budgetary equipment cost be provided for a new liquid sodium permanganate chemical feed system. This is also discussed in this letter.

STRAND ASSOCIATES, INC.® ENGINEERS

Access Road Improvements

The purpose of the access road improvements is to accommodate the large trucks that deliver chemicals to the treatment plant. According to the chemical supplier, the chemical delivery truck has an approximate load weight of 80,000 pounds and is approximately 80 feet long in length (WB-65).

The enclosed Overall Site Plan shows the proposed improvements. These improvements were designed to allow chemical delivery trucks to pull forward next to the chemical building and backup next to the clearwell before leaving the plant site.

The following list of items was included in the design.

- Remove existing retaining wall.
- Relocate 14-inch DI river water main.
- Remove and replace existing fence.
- Fill and regrade to widen access road.
- Cut and regrade for new pavement access near clearwell.
- Install new pavement (1.5-inch bituminous surface, 3-inch bituminous base, 9-inch DGA)
- Repave existing pavement (remove and replace existing 1.5-inch bituminous surface).
- Provide new guardrail along widened access road.
- Relocate existing light poles to accommodate widened access road.
- Provide drainage improvements including bituminous curb along widened access road, two new headwalls on existing culverts, and new riprap

These improvements, as designed, will also require a construction easement along the west property line.

STRAND ASSOCIATES, INC.® ENGINEERS

Chemical Feed Improvements

The purpose of the chemical feed improvements is to provide a structure to house chemical storage and feed equipment for ferric chloride, caustic soda, hydrofluorosilicic acid, corrosion inhibitor, and sulfuric acid.

The enclosed Building Plan and Sections display the chemical building layout and some structural details.

The chemical building improvements include:

- Five chemical systems with bulk tanks, day tanks, level sensors, drum and tote scales, transfer pumps, and metering pumps.
- Five rooms with separate chemical containment areas with chemical resistant coating (five total).
- Separate HVAC equipment for each room.
- Fire protection (sprinkler system).
- Fiberglass grating.
- Fiberglass doors with windows (five total).
- Coiling overhead doors (three total).
- Brick and block masonry walls.
- Pre-cast plank ceiling.
- Gable roof with preengineered roof truss and prefinished metal roof system.
- Parking/loading area to provide access for chemical truck delivery.
- Pressure reducing valve for sprinkler system and process water.

The chemical building site work includes:

- Parking/loading area (1.5-inch bituminous surface, 3-inch bituminous base, 9-inch DGA)

- Cut and regrade for new building.
- Replace and remove fence.
- Ductile iron pipe (six inch) to chemical building for fire protection.
- Two concrete encased PVC containment pipes with flexible PE chemical carrier pipe for yard piping and each chemical system (ten total).
- One access manhole with H20 loading access hatch for each chemical system to assist in future replacement of chemical tubing (five total).
- Single PVC chemical piping in existing building to each application point (five total)

Additional miscellaneous work includes the demolition of existing chemical equipment and tanks in the existing building.

Chlorine Scrubber

KAW has requested that the new emergency chlorine gas scrubber system be an Emergency Gas Scrubber (EGS)–FOC5 as manufactured by PURAFIL. KAW has requested that the chlorine scrubber be designed for the release of the contents of one 150 pound chlorine gas cylinder based on the requirements of Section II.D.9, Gas Scrubbers, in the T-9 American Water Systems Engineering Standards.

Chlorine scrubber improvements include:

- New chlorine scrubber installed outside existing building on equipment base.
- Fiberglass piping between the chlorine scrubber and the existing chlorine room through the ammonia room.
- Related electric and controls.

Miscellaneous Existing Building Improvements

Improvements to the existing activated carbon feed system, loading dock, and filter effluent pipe were also requested by KAW.

These improvements include:

- Demolition and replacement of existing dust collector.
- New loading dock ramp.
- Electric pallet truck (6,000-lb capacity).
- Removal of existing 16-inch DI tee and vertical header and replace with PVC.
- Construction of new concrete curb around clearwell access.

Liquid Sodium Permanganate Feed System

KAW requested Strand Associates to provide an equipment cost opinion for a liquid sodium permanganate chemical feed system without a new building. The sodium permanganate chemical feed system equipment cost includes:

- A peristaltic chemical metering pump for approximately $3,100.
- A drum scale for approximately $2,400.

Possible Cost Savings

At the request of KAW, the following is a list of items that could be evaluated for their potential cost savings for the project.

- The five chemical access manholes could be eliminated. Each chemical system has two containment pipes and two carrier pipes running from the new chemical building to the existing building. Therefore, if there is a break in a chemical carrier pipe, there is already an installed spare pipe that can be used. Another option is smaller access sumps similar to those used for pulling electrical wire.
- Each chemical containment pipe is encased in concrete. While this provides added protection to the pipe, it may not be necessary.
- A single wythe insulated block exterior on the chemical building could be used in lieu of brick and block construction.
- An asphalt shingled roof on the chemical building could be constructed in lieu of a seam metal roof.

STRAND ASSOCIATES, INC.
ENGINEERS

- A membrane roofing material over the flat precast roof plank on the chemical building could be constructed in lieu of a truss roof.
- Epoxy-coated steel doors in the chemical building could be provided in lieu of fiberglass doors.
- The bulk storage tanks are specialty tanks that will allow the tank to completely drain. There are tanks without this feature that are available. There may also be a wider range of sizes of tanks available that may help to reduce building height.

We would be happy to consider and incorporate these and other low cost options into the design documents by amendment to our agreement.

If you have any questions or concerns regarding the information provided in this letter, please feel free to give me a call.

Sincerely,

STRAND ASSOCIATES, INC.

Tobias J. Parker, P.E.

Enclosure(s)

c/enc.: Chris Keil, P.E.
Brian Hackman, P.E.

SUMMARY OF CONSTRUCTION COST OPINION FOR THIRD QUARTER 2008

Description	Access Road Improvements	Chemical Building	Chlorine Scrubber	Misc. Existing Building Improvements
Bulk Chemical Delivery Road Improvements	$160,000			
Proposed Chemical Building		$845,000		
Chlorine Scrubber			$84,000	
PAC feed Dust Collector				$10,000
Loading Dock Improvements				$12,000
New 16-inch PVC Filter Effluent Pipe				$20,000
SUBTOTAL	**$160,000**	**$845,000**	**$84,000**	**$40,000**
General Conditions (8%)	$12,800	$67,600	$6,700	$3,200
SUBTOTAL	**$172,800**	**$912,600**	**$90,700**	**$43,200**
Contingency (15%)	$28,000	$148,000	$15,000	$7,000
Construction Cost Opinion (Third Quarter 2008)	**$200,000**	**$1,060,000**	**$110,000**	**$50,000**
Total Construction Cost Opinion (Third Quarter 2008)				**$1,420,000**

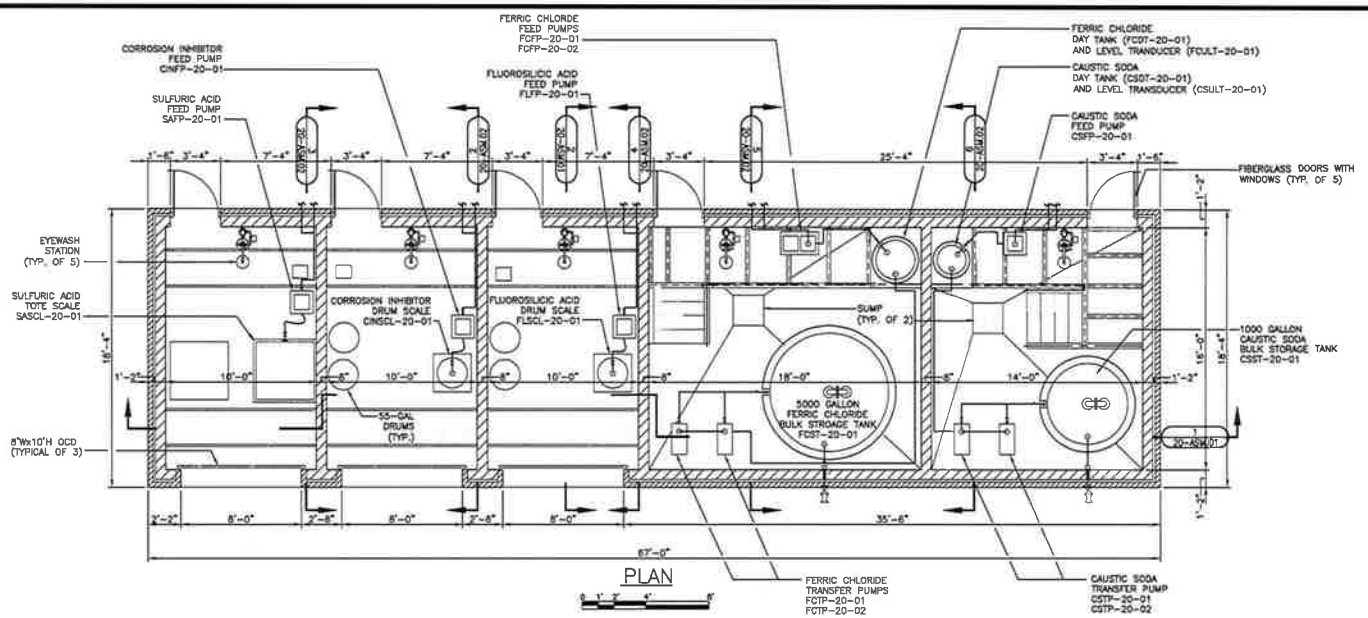

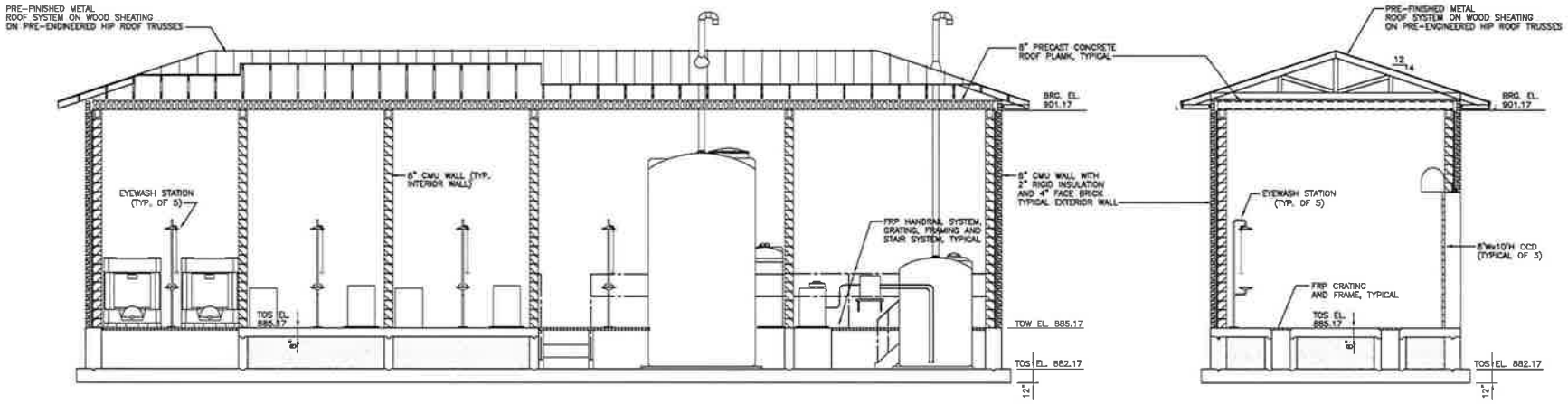

NOT FOR CONSTRUCTION

NO.	REVISIONS	DATE:

DATE: 9/08 DES BY: DJP CHK BY: CJK
RECORD DRAWING
BY: DATE:
CONTRACTOR:

CHEMICAL BUILDING
PLAN AND SECTION
OWEN COUNTY WATER TREATMENT PLANT
CHEMICAL FEED SYSTEM IMPROVEMENTS
KENTUCKY AMERICAN WATER
OWENTON, KENTUCKY

STRAND ASSOCIATES, INC. ENGINEERS

SHEET XXX
20-ASM.01
JOB NO. 5493.107

File: S:\LOU\5400--5499\5493\107\Acad\20-ASM.01.dwg Time: Aug 29, 2008 - 1:47pm

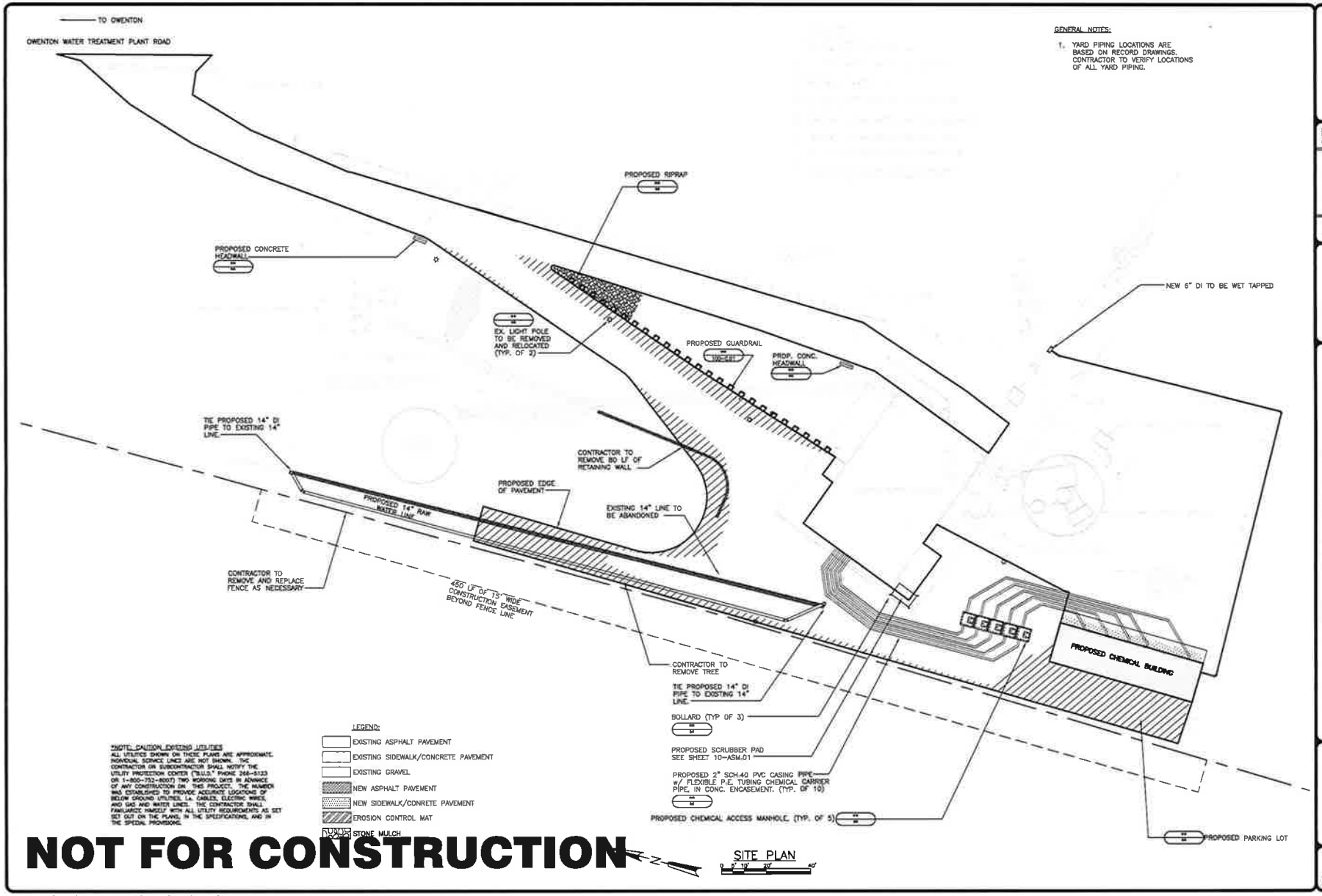

File: S:\LOU\5400--5499\5493\107\Acad\05-C.01.dwg Time: Aug 29, 2008 - 1:45pm

KAW_R_PSCDR1#1_072312

Strand Associates, Inc.®
Waterfront Plaza
325 West Main Street, Suite 710
Louisville, KY 40202
(P) 502-589-7020
(F) 502-589-7010

April 4, 2012

Mr. Jason Hurt, P.E.
Kentucky American Water
2300 Richmond Road
Lexington, KY 40502

Re: Owenton, Kentucky, Water Treatment Plant Improvements

Dear Jason,

This letter is in response to your request to provide preliminary capital costs for several Kentucky American Water (KAW) identified improvements to the Owenton intake and water treatment plant. The following is our understanding of the desired improvements.

1. Chemical Bulk Storage Improvements: These improvements were designed to bring chemical storage and feed facilities to American Water standards and improve delivery access by bulk chemical suppliers. The improvements include a new chemical feed building that houses bulk liquid chemicals, access road improvements, and a chlorine scrubber. Strand Associates, Inc.® provided preliminary design for these improvements in 2008.

2. Chemical Pretreatment Reliability Improvements: These improvements are intended to address a lack of redundancy in the existing sedimentation- related process. KAW desires a full capacity process to provide treatment when the existing process is taken out of service. The improvements include horizontal shaft flocculators and a sedimentation process utilizing plate settlers in a package metal tank.

3. Sludge Handling Improvements: These improvements are intended to improve treatment of solids residuals from sedimentation and filtration processes. KAW desires a gravity sludge thickener and belt filter press.

4. Filter Redundancy Improvements: These improvements are intended to improve redundancy of the filtration process. KAW desires two additional filters of equal size as the existing filters.

5. Emergency Power Reliability Improvements: These improvements are intended to provide backup power to both treatment plant and intake facilities. KAW desires a standby generator at both locations.

6. SCADA Improvements: These improvements are intended to improve the efficiency of operations and update antiquated equipment controls. KAW desires supervisory control and data acquisition (SCADA) graphics and controls of various existing and new equipment.

7. Raw Water Intake Improvements: These improvements are intended to provide a more reliable source water supply than the existing intake on Severn Creek. KAW desires a new intake on

the Kentucky River near its existing intake on Severn Creek. New raw water pumps, permanganate feed system, and security improvements are also included.

8. New Storage Tank: These improvements are intended to stabilize system pressures and meet KAW's need for additional usable storage. It will also allow for the Fairgrounds tank to be taken out of service for required maintenance. KAW desires the tank to be a new 1-million-gallon elevated storage tank.

The following table provides a preliminary opinion of probable cost in second quarter 2012 dollars. Each improvement includes construction and engineering costs and contingency.

Capital Improvement Description	Cost
Chemical Bulk Storage Improvements	$2,100,000
Pretreatment Reliability Improvements	$1,200,000
Sludge Handling Improvements	$1,800,000
Filter Reliability Improvements	$1,700,000
Emergency Power Reliability Improvements	$600,000
SCADA Improvements	$300,000
Raw Water Intake Improvements	$1,400,000
New Storage Tank	$2,300,000
Total	**$11,400,000**

Where possible, several improvement costs were based on recent projects of similar size. However, several other costs included published cost curves based on similarly sized treatment capacity. The intake improvement costs were based primarily on the City of Owenton's budgeted cost of the project as developed by MSE Inc. and reflected in 2012 dollars utilizing Engineering News Record's construction indices. The chemical bulk feed and intake improvements had some level of detailed design associated with them. Total capital costs could change significantly as the projects are further defined and KAW's preferences evolve.

Sincerely,

STRAND ASSOCIATES, INC.®

Christopher J. Keil, P.E.

c: Lance Williams, Kentucky American Water

CJK:das\\strand.com\Projects\LOU\5400--5499\5493\122\Wrd\letter-kaw owenton wtp improvement costs.docx

KENTUCKY-AMERICAN WATER COMPANY
CASE NO. 2012-00096
COMMISSION STAFF'S FIRST REQUEST FOR INFORMATION

Witness: Lance Williams

2. Provide all studies and reports that Kentucky-American prepared or commissioned prior to January 1, 2006 that review or discuss the operation of the Owenton Water Treatment Plant and any repairs or improvements to that plant.

Response:

See attached. A portion of the attached report is redacted and has been provided under seal and is the subject of a petition for confidential protection.

Kentucky-American Water Company

Purchase of the Water and Sewer Assets of Owenton KY

September 9, 2003

Kentucky-American Water Company

Contents

Section	Description	Page
I.	Recommended Action	3
II.	Transaction Overview	4
III.	System Overview	5
IV.	Opportunities and Vulnerabilities	7
V.	Financial Analysis	8
VI.	Next Steps	33
VII.	Draft Purchase Agreement	34

I. Recommended Action

Kentucky-American Water Company ("KAWC") management recommends and requests approval to purchase the City of Owenton's water and sewer assets for $1,852,628 and $998,850, respectively subject to the following condition with such approval also being contingent upon the terms and conditions in the Agreement, including, but not limited to, final approval by the City, receipt of a final unappealable order of approval from the Kentucky Public Service Commission, all other approvals of the appropriate regulatory authorities, and satisfactory results of the Company's investigations of the financial, regulatory, management and physical condition of the System to be purchased.

The PSC must approve a use fee in lieu of property taxes (IDB concept) adequate to allow Owenton to borrow $300,000 to fund capital improvements of the water system. Pending that approval, Owenton must set aside $300,000 of the proceeds to be used to fund capital projects if the PSC does not approve the use fee or if the use fee approved is not adequate to fund $300,000 in capital projects.

Also, the model is based on filing for rate relief for both systems coincident with the filing of the petition for approval of the purchase. Rate increases in the model are included using the statutory 7-month suspension period. The rate year for the first rate increase begins August 1, 2004. The initial rate increase included for the water system is 7.38% and for the sewer system, 8.78%.

A second rate increase for the water model, to coincide with rehabilitation of the water treatment plant, is included in the model with a rate year beginning October 1, 2006. This increase is 13.91%.

II. Transaction Overview

1. Kentucky-American has been working with the City of Owenton since the late 1990's to develop a mutually acceptable deal. By combining these systems with our current Northern Division, the opportunity for synergies exists. Two prior proposals have been made, the first in November 1999. Since we began discussions with Owenton, the city has been firm on these conditions for sale:

- **Protect all current employees.**
- **Maintain an office in Owenton for walk-in bill payment and customer service.**
- **Proceeds of at least $1 million to the city after the sale is complete.**

2. There is a strong indication of growth in Owen and surrounding counties:

- **Economic impact of the Kentucky Speedway and associated improvement of roads and bridges.**
- **Natural gas will be available in Owenton in 1 – 2 years.**
- **Strong support from Owen County elected officials including involvement in public private partnerships and against condemnation.**
- **Potential for regional airport in Owen or a surrounding county.**
- **Possible relocation of Kentucky Kingdom Amusement Park to this area.**

3. Owenton finished water is the main source of supply for the 2,000 customers in the Company's Northern Division. Acquisition of the Owenton system will result in the greater potential to eliminate the water quality problems that have plagued this system, and as a result, our customers, in the past.

4. Purchase of this water system will give KAWC access to a new and reliable source of water – Pool # 2 on the Kentucky River.

III. City of Owenton Overview

Owenton, Kentucky is the county seat for Owen County, which is in north central Kentucky, approximately 30 miles north of Frankfort, and 50 miles southwest of Cincinnati, Ohio. The population of Owenton, according to the 2000 census was 1,387. The population of Owen County, also according to the 2000 census was 10,547. The area is mostly rural farmland, but is highly developable with the advent of water served by KAWC's Northern Division (formerly Tri-Village Water District).

The City of Owenton has been in existence for approximately 180 years and the water system was started after the First World War. Over the years, it expanded to most of the streets in town and later some countywide expansion was made, but the majority of the expansion into Owen County was a result of the creation of the Tri-Village Water District.

Water System – The Owenton water system serves approximately 1,100 retail customers and one wholesale customer. The one wholesale customer, KAWC's Northern Division, uses about 63% of the total water sold by the City of Owenton.

Owenton's and KAWC's Northern Division water needs are served by an intake plant which pulls water from Severn Creek and pumps it to a manmade reservoir adjacent to the filtration plant. An important part of this transaction is the construction of a new raw water intake on the Kentucky River at Pool #2 (at a location approximately 1,000 feet from the current intake) to help meet new water quality regulations. From the reservoir, the water is treated and placed into the system by pumping it into storage tanks and further by gravity flow to customers. There are approximately 22 miles of distribution main inside the city limits of Owenton and approximately 20 miles of main in the county for transmission and distribution with 7 miles of that being the approximate distance from the intake on the banks of the Severn Creek to the main water filtration plant.

When the new intake is built, the 12" raw water line from the Severn Creek intake will be extended to the new intake and after connection will by-pass the reservoir and go straight to the filtration plant. The reservoir will be maintained as a back-up supply in cases of emergency.

One lacking factor in the filtration plant is reliance on a single claricone for treatment. While this has not created significant problems in the past, reliance on this single claricone is a potential source of problems. KAWC's proposal includes funds to study and make improvements in the filtration plant to improve efficiency and to provide necessary redundancy.

Sewer System – Owenton's sewer system serves approximately 600 customers. The first sewer collection started in the 1950's and continually grew as the collection system was expanded through the city. In 1988 a major sewer facility was built on land owned by the city – a state of the art concrete, steel, brick and masonry facility with a very large aeration pond/lagoon, which proves to be highly efficient and takes very little effort to maintain. The potential for an increased sewer customer base exists because there is considerably more capacity in the plant than is presently being used. However, as Owen County is a rural community there is currently a lot of distance between dwelling units. Expansion of the sewer system, at least initially, will have to be made selectively due to the high cost of sewer lines and lift stations for a relatively small population base.

IV. Opportunities and Vulnerabilities Assessment

Opportunities

- **There is a strong potential for growth in Owen County due to development brought about by the Kentucky Speedway, the advent of natural gas service to Owenton, the potential for a regional airport and the strong support that KAWC has from elected officials in Owen County.**

- **The acquisition of the Owenton Water System will give KAWC an additional and reliable source of supply in pool #2 of the Kentucky River.**

- **This project is valuable strategically in that it sends a "business as usual" message as KAWC expands its service territory.**

- **Using creative partnerships, this acquisition would allow KAWC to expand its presence in the sewer business in Kentucky.**

- **This acquisition would allow KAWC to be in control of its own destiny for water quality for its Northern Division customers.**

- **The County Judge has demonstrated his willingness to seek grant funds for partnership projects and we expect that will continue.**

Vulnerabilities

- **Significant rate increases needed to cover the current cost of service and to make needed capital improvements.**

- **While we feel that we have the necessary votes for a sale of the systems to KAWC, in the event that we do make a proposal to the city, the potential exists that the city could reject our proposal.**

V. Financial Analysis/5 Year Forecast

	Page
Owenton Water System:	
• KPIs	9
• Project Value Contribution	10
• DCF	11
• Financial Valuation - 5-Year Forecast EBITDA	12
• Project Financing Forecast	13
• Project Balance Sheet	14
• Project Capital Structure	15
• Project Income Statement	16
• Project Cash Flow	17
• Historical Financial Statements	18
Owenton Sewer System:	
• KPIs	21
• Project Value Contribution	22
• DCF	23
• Financial Valuation - 5-Year Forecast EBITDA	24
• Project Financing Forecast	25
• Project Balance Sheet	26
• Project Capital Structure	27
• Project Income Statement	28
• Project Cash Flow	29
• Historical Financial Statements	30

KENTUCKY-AMERICAN WATER COMPANY
OWENTON WATER SYSTEM PURCHASE
SUMMARY KEY PERFORMANCE INDICATORS

			Forecast Year 1	Forecast Year 2	Forecast Year 3	Forecast Year 4	Forecast Year 5
PROFIT & LOSS:							
	Revenue (Turnover)		$783,112	$824,960	$862,628	$958,957	$967,720
	EBITDA		$293,879	$323,969	$378,169	$463,738	$462,208
	Operating Result		$225,323	$240,103	$292,828	$360,678	$359,149
	Profit before Tax		$218,356	$161,222	$216,367	$246,570	$247,936
	Distributable profit		$125,440	$92,504	$133,846	$142,651	$143,484
	EBITDA Margin		37.53%	39.27%	43.84%	48.36%	47.76%
	Operating Result Margin		28.77%	29.10%	33.95%	37.61%	37.11%
	ROCE		10.52%	10.85%	11.09%	12.10%	12.21%
	Value Contribution		$491	$7,739	$15,539	$47,615	$50,372
BALANCE SHEET & CASHFLOW:							
	Net Operating Assets		$3,454,850	$3,574,449	$4,282,861	$4,223,848	$4,145,135
	Net Debt		$1,280,973	$1,379,124	$1,831,188	$1,791,300	$1,739,287
	Operating Cash Flow		$176,695	$179,215	$202,280	$253,468	$254,300
	Equity Investment		$885,342	$935,568	$1,220,406	$1,229,478	$1,230,674
	Return on Equity		14.17%	9.89%	10.97%	11.60%	11.66%
OTHER:	Cost to Acquire		$1,952,628				
	Customers Acquired		1,086				
	Capex		$317,118	$254,400	$844,688	$94,982	$75,282
	Depreciation		$68,556	$83,866	$85,341	$103,060	$103,060
	Amortization Goodwill		$7,757	$7,757	$7,757	$7,757	$7,757
	OPEX (Excluding Depr)		$489,233	$500,991	$484,460	$495,220	$505,512
	OPEX as % Sales		62.47%	60.73%	56.16%	51.64%	52.24%
	Operating Result Per employee		$34,665	$36,939	$53,241	$65,578	$65,300
	Headcount all employees		6.5	6.5	5.5	5.5	5.5

MULTIPLES

TEV Revenues	2.9	Cost to acquire/Owenton revenues at 6/30/02
TEV EBIT	37.6	Cost to acquire/Owenton EBIT at 6/30/02
TEV EBITDA	12.9	Cost to acquire/Owneton EBITDA at 6/30/02
NET PP&E	0.64	Cost to acquire/Owenton Net PP&E at 6/30/02
Customers	$1,798	Cost to acquire/Owenton Customers at 11/30/02

ACQUISITION PROJECT VALUE CONTRIBTUTION: OWENTON WATER SYSTEM PURCHASE					
	Forecast	Forecast	Forecast	Forecast	Forecast
	Year 1 (04)	Year 2 (05)	Year 3 (06)	Year 4 (07)	Year 5 (08)
Net Operating Result:					
Revenues	$783,112	$824,960	$862,628	$958,957	$967,720
Less:					
O & M Expense	$469,180	$480,114	$459,230	$470,158	$480,863
Depreciation	$68,556	$83,866	$85,341	$103,060	$103,060
Amortization					
General Taxes	$1,139	$1,199	$1,254	$1,394	$1,407
Property Taxes	$18,914	$19,678	$23,975	$23,668	$23,242
Net Operating Result	$225,323	$240,103	$292,828	$360,678	$359,149
Accumulated AFUDC	$25,058	$29,970	$54,634	$54,634	$54,634
Invested Capital:					
Total Capital (Adjusted for UPAA & AFUDC)	$2,141,257	$2,284,723	$2,996,960	$2,966,144	$2,915,327
Less:					
Cash	($0)	($0)	($0)	$0	($0)
Invested Capital	$2,141,257	$2,284,723	$2,996,960	$2,966,144	$2,915,327
Average Invested Capital	$2,141,257	$ 2,212,990	$ 2,640,841	$ 2,981,552	$ 2,940,735
Return on Invested Capital	10.52%	10.85%	11.09%	12.10%	12.21%
Hurdle Rate	10.50%	10.50%	10.50%	10.50%	10.50%
Operating Result to Meet Hurdle	$ 224,832	$ 232,364	$ 277,288	$ 313,063	$ 308,777
Value Contribution	$ 491	$ 7,739	$ 15,539	$ 47,615	$ 50,372

KENTUCKY-AMERICAN WATER COMPANY

Valuation of:

OWENTON WATER SYSTEM PURCHASE

Discounted Cash Flow Analysis - EBITDA Multiple Method

(Dollars in thousands)

Projections tie to accompany financial statements to be included in final packages yo prepare.

Calculation of Free Cash Flow

	Actual	Projected	Projected	Projected	Projected	Projected
	2003	2004	2005	2006	2007	2008
EBITDA	$0	$294	$324	$378	$464	$462
Less: Depreciation & Amortization	0	(76)	(92)	(93)	(111)	(111)
EBIT	0	218	232	285	353	351
Taxes on EBIT [1] at 39%	0	(85)	(91)	(111)	(138)	(137)
Tax-effected EBIT	0	133	142	174	215	214
Plus: Depreciation & Amortization	0	76	92	93	111	111
Less: Capital Expenditures	0	(317)	(254)	(845)	(95)	(75)
Plus: Change in Cust. Advances & CIAC	0	27	14	15	15	15
+/- Change in Non-Cash Working Cap.	0	0	0	0	0	0
Free Cash Flow	$0	($81)	($7)	($563)	$246	$265

Notes:
(1) Taxes on EBIT calculated at composite rate for federal and state taxes.

Discount Rate
WACC **6.37%** State Specific Economic Profit hurdle rate provided by Corporate Finance Dept.

Calculation of Terminal Value

TEV / EBITDA Factor		9.25	Average TEV / EBITDA multiple for publicly traded water utilities
EBITDA of 0	x	$462	Projected 2008 EBITDA
TEV:		$4,275	Projected 2008 Enterprise Value

Calculation of Discounted Cash Flow Valuation

	A +	B			=	C		
	Discounted Cash	PV of Terminal Value as a						
Discount	Flows	Multiple of 2008 EBITDA				Enterprise Value		
Rate	(2004-2008)	9.00	9.25	9.50		9.00	9.25	9.50
6.12%	($162)	$3,091	$3,177	$3,263		$2,929	$3,015	$3,100
6.37%	**(163)**	3,055	**3,140**	3,225		2,892	**2,977**	3,062
6.62%	(163)	3,019	3,103	3,187		2,856	2,940	3,023

	- D	=	E		
Discount	Net Debt at		Total Equity Value		
Rate	**12/31/2003**		9.00	9.25	9.50
6.12%	$0		$2,929	$3,015	$3,100
6.37%	**0**		2,892	**2,977**	3,062
6.62%	0		2,856	2,940	3,023

Terms
Net Debt = Debt (long term, current, and notes payable or bank debt) + preferred stock - cash
Equity Value = Value of Common Stock
Enterprise Value = Equity Value + Net Debt

Additional Comments / Assumptions:

$0	Pre-Tax Operating Synergies reflected in first year of projections ($ thousands)
$1,952,628	Proposed Purchase Price ($ thousands)
	Anticipated Closing Date
	Other: (Please provide detail)

KENTUCKY-AMERICAN WATER COMPANY
OWENTON WATER SYSTEM PURCHASE

	Forecast Year 1 (04)	Forecast Year 2 (05)	Forecast Year 3 (06)	Forecast Year 4 (07)	Forecast Year 5 (08)
VALUATION:					
Revenues:					
Revenues	$783,112	$824,960	$862,628	$958,957	$967,720
AFUDC	$25,058	$4,912	$24,664	$0	$0
Total Revenues/Income	$808,169	$829,872	$887,293	$958,957	$967,720
Total (less AFUDC)	$783,112	$824,960	$862,628	$958,957	$967,720
YE ROE	14.17%	9.89%	10.97%	11.60%	11.66%
Total O&M Expenses	$469,180	$480,114	$459,230	$470,158	$480,863
Depreciation	$68,556	$83,866	$85,341	$103,060	$103,060
Amort Acq Adjustment	$7,757	$7,757	$7,757	$7,757	$7,757
General Taxes	$1,139	$1,199	$1,254	$1,394	$1,407
Property Taxes	$18,914	$19,678	$23,975	$23,668	$23,242
Total Operating Exp Before Taxes	$565,546	$592,614	$577,558	$606,036	$616,328
EBIT	$217,566	$232,346	$285,071	$352,921	$351,392
Depreciation/Amortization	$76,313	$91,623	$93,098	$110,817	$110,817
EBITDA	$293,879	$323,969	$378,169	$463,738	$462,208

Weighted Cost of Capital	Ratio	Cost Rate	Pre-Tax Rate	Weighted Cost
Acq. New Long-Term Debt	60.00%	6.30%	6.30%	3.78%
Acq. New Common Equity	40.00%	10.25%	16.80%	6.72%
Total Acq. Capitalization	100.00%			10.50%

ACQUISITION FINANCING: OWENTON WATER SYSTEM PURCHASE			Forecast	Forecast	Forecast	Forecast	Forecast
		Rate	Year 1 (04)	Year 2 (05)	Year 3 (06)	Year 4 (07)	Year 5 (08)
Purchase Price	$1,852,628		$1,852,628				
Estimated Cost to Acquire - Legal	$100,000		$100,000				
CAPX to Acquire (New Customers * CAPX Rate)			$0	$0	$0	$0	$0
CAPX to Acquire (Scheduled Investment)	$290,000		$317,118	$254,400	$844,688	$94,982	$75,282
LESS AFUDC			$25,058	$4,912	$24,664	$0	$0
Total Cap Required	$2,242,628		$2,244,688	$249,488	$820,024	$94,982	$75,282
Debt Assumed	$0	0.00%	$0	$0	$0	$0	$0
Prior Yr. Cash			$109,734	$124,237	$116,583	$161,462	$161,970
Total Cash Required	$2,242,628		$2,134,954	$125,252	$703,441	($66,479)	($86,688)
		2.50%					
New L-T Debt	$1,345,577	6.30%	$1,280,973	$98,151	$452,064	($39,888)	($52,013)
New Common Equity	$897,051		$853,981	$27,101	$251,377	($26,591)	($34,675)
	$2,242,628		$2,134,954	$125,252	$703,441	($66,479)	($86,688)
Planned YE CE%			40.00%	40.00%	40.00%	40.00%	40.00%
Total Interest Expense			$32,024	$83,793	$101,125	$114,108	$111,213
YE CE to Total Capital			40.87%	40.42%	39.99%	40.70%	41.44%
Return on YE Common Equity			14.17%	9.89%	10.97%	11.60%	11.66%

ACQUISITION BALANCE SHEET: OWENTON WATER SYSTEM PURCHASE							
		@Acq.	Forecast	Forecast	Forecast	Forecast	Forecast
	@Pur Price	Per Books	Year 1 (04)	Year 2 (05)	Year 3 (06)	Year 4 (07)	Year 5 (08)
ASSETS:							
Utility Plant	**$4,263,439**	$4,263,439	$4,263,439	$4,580,557	$4,834,957	$5,679,646	$5,774,628
Additions (cost to acq is initial)		$0	$317,118	$254,400	$844,688	$94,982	$75,282
Retirements (estimate)			$0	$0	$0	$0	$0
Accum depreciation (adjusted)	**($1,316,490)**	($1,316,490)	($1,428,224)	($1,555,268)	($1,683,788)	($1,830,026)	($1,976,264)
Net Utility Plant	$2,946,949	$2,946,949	$3,152,333	$3,279,689	$3,995,858	$3,944,602	$3,873,645
Cash			($0)	($0)	($0)	$0	($0)
Acq Adjustment in Price	$310,275	$310,275	$302,518	$294,761	$287,004	$279,247	$271,490
Acq. Contributions (adjusted)	**$0**	$0	$0	$0	$0	$0	$0
Acq. Advances	**$0**	$0	$0	$0	$0	$0	$0
Current Assets	**$0**	$0	$0	$0	$0	$0	$0
CWIP			$0	$0	$0	$0	$0
Total Assets	$3,257,224	$3,257,224	$3,454,850	$3,574,449	$4,282,861	$4,223,848	$4,145,135
LIABILITIES & EQUITY:							
Current Liabilities	**$0**	$0	$0	$0	$0	$0	$0
Long Term Debt							
Assumed	$0	$0	$0	$0	$0	$0	$0
Issued	$1,171,577	$1,171,577	$1,280,973	$1,379,124	$1,831,188	$1,791,300	$1,739,287
Common Equity	$781,051	$781,051	$885,342	$935,568	$1,220,406	$1,229,478	$1,230,674
Total Cap	$1,952,628	$1,952,628	$2,166,315	$2,314,692	$3,051,594	$3,020,778	$2,969,961
Net Working Capital	$0	$0	$0	$0	$0	$0	$0
Advances	$0	$0	$0	$0	$0	$0	$0
Gross CIAC	**$1,772,487**	$1,772,487	$1,799,605	$1,814,005	$1,828,694	$1,843,676	$1,858,958
Accum Amortization CIAC	**($467,891)**	($467,891)	($511,070)	($554,248)	($597,427)	($640,605)	($683,784)
Total Cap & Liabilities	$3,257,224	$3,257,224	$3,454,850	$3,574,449	$4,282,861	$4,223,848	$4,145,135
			$0	$0	$0	$0	$0

ACQUISITION CAPITAL STRUCTURE: OWENTON WATER SYSTEM PURCHASE					
	Forecast Year 1 (04)	Forecast Year 2 (05)	Forecast Year 3 (06)	Forecast Year 4 (07)	Forecast Year 5 (08)
Debt	$1,280,973	$1,379,124	$1,831,188	$1,791,300	$1,739,287
% of Total Cap	59.13%	59.58%	60.01%	59.30%	58.56%
CE	$885,342	$935,568	$1,220,406	$1,229,478	$1,230,674
% of Total Cap	40.87%	40.42%	39.99%	40.70%	41.44%
Total Cap	$2,166,315	$2,314,692	$3,051,594	$3,020,778	$2,969,961
CE EOY% TO TOT CAP	40.87%	40.42%	39.99%	40.70%	41.44%

ACQUISITION INCOME STATEMENT: OWENTON WATER SYSTEM PURCHASE					
	Forecast Year 1 (04)	Forecast Year 2 (05)	Forecast Year 3 (06)	Forecast Year 4 (07)	Forecast Year 5 (08)
Total Revenue/Income	$808,169	$829,872	$887,293	$958,957	$967,720
O&M, Depr, Taxes Other	$557,789	$584,857	$569,801	$598,279	$608,571
Pre-Tax UOI	$250,381	$245,015	$317,492	$360,678	$359,149
Interest Expense	$32,024	$83,793	$101,125	$114,108	$111,213
Pre-Tax Income	$218,356	$161,222	$216,367	$246,570	$247,936
Income Tax Rate	39.00%	39.00%	39.00%	39.00%	39.00%
Income Taxes Net of AFUDC	$85,159	$60,961	$74,764	$96,162	$96,695
Income After Tax	$133,197	$100,261	$141,603	$150,408	$151,241
Acq. Adj. Amortization	$7,757	$7,757	$7,757	$7,757	$7,757
Net to CE	$125,440	$92,504	$133,846	$142,651	$143,484
Pre-tax Interest Coverage	7.82	2.92	3.14	3.16	3.23
ROE YE Equity	14.17%	9.89%	10.97%	11.60%	11.66%
Beginning CE		$885,342	$935,568	$1,220,406	$1,229,478
New Equity	$853,981	$27,101	$251,377	($26,591)	($34,675)
Net Income	$125,440	$92,504	$133,846	$142,651	$143,484
Dividends	$94,080	$69,378	$100,385	$106,988	$107,613
RE	$31,360	$23,126	$33,461	$35,663	$35,871
CE 12/31	$885,342	$935,568	$1,220,406	$1,229,478	$1,230,674
Avg. ROE Earned	11.66%				

ACQUISITION STATEMENT OF CASH FLOWS: OWENTON WATER SYSTEM PURCHASE					
	Forecast Year 1 (04)	Forecast Year 2 (05)	Forecast Year 3 (06)	Forecast Year 4 (07)	Forecast Year 5 (08)
Cash Flows from Operating Activities:					
Net to CE	$125,440	$92,504	$133,846	$142,651	$143,484
Adjust:					
AFUDC	$25,058	$4,912	$24,664	$0	$0
Depreciation	$68,556	$83,866	$85,341	$103,060	$103,060
Amortization	$7,757	$7,757	$7,757	$7,757	$7,757
Net Cash from Operations	$176,695	$179,215	$202,280	$253,468	$254,300
Cash Flows from Investing Activities:					
Acquisition/Cost to Acquire	($1,952,628)				
Construction Expenditures	($292,060)	($249,488)	($820,024)	($94,982)	($75,282)
Net Cash from Investing	($2,244,688)	($249,488)	($820,024)	($94,982)	($75,282)
Cash Flows from Financing Activities:					
Add: Tap Fees	$27,118	$14,400	$14,688	$14,982	$15,282
Long Term Debt	$1,280,973	$98,151	$452,064	($39,888)	($52,013)
Common Stock	$853,981	$27,101	$251,377	($26,591)	($34,675)
Deduct:					
Dividends	($94,080)	($69,378)	($100,385)	($106,988)	($107,613)
Net Cash from Financing	$2,067,992	$70,274	$617,744	($158,485)	($179,019)
Cash for Year	($0)	$0	$0	$0	($0)
Cash 1/1	$0	($0)	($0)	($0)	$0
Cash 12/31	($0)	($0)	($0)	$0	($0)

KENTUCKY-AMERICAN WATER COMPANY
OWENTON WATER SYSTEM PURCHASE
HISTORICAL DATA

Balance Sheet

	6/30/2000	6/30/2001	6/30/2002
Assets			
Cash	$ 265,159	$ 288,015	$ 290,325
Investments	$ 189,812	$ 199,587	$ 206,993
AR, net	$ 74,104	$ 81,804	$ 86,295
Other Rec.	$ 20,506	$ 27,801	$ 37,801
Interest Rec.	$ 541	$ 593	$ 314
Inventory	$ 7,842	$ 8,726	$ 8,220
Prepaids	$ 4,036	$ 4,213	$ 408
Total Current Assets	$ 562,000	$ 610,739	$ 630,356
Restricted Assets:	$ 210,448	$ 240,255	$ 261,298
Fixed Assets:			
Property, plant and equipment	$ 4,204,808	$ 4,209,107	$ 4,263,439
Less accumulated depreciation	$ (1,015,486)	$ (1,116,033)	$ (1,215,160)
Total Net Fixed Assets	$ 3,189,322	$ 3,093,074	$ 3,048,279
Total Assets	$ 3,961,770	$ 3,944,068	$ 3,939,933
Liabilities and Fund Equity			
Current Liabilities			
Accounts Payable	$ 18,771	$ 18,801	$ 26,210
Accrued liabilities	$ 39,031	$ 20,359	$ 22,963
Current maturities Notes Payable	$ 17,000	$ 19,000	$ 19,000
Accrued Interest	$ 16,235	$ 16,039	$ 15,819
Customer Deposits	$ 66,355	$ 55,719	$ 57,992
Total Current Liabilities	$ 157,392	$ 129,918	$ 141,984
Long-Term Liabilities			
Bonds Payable	$ 1,398,000	$ 1,379,000	$ 1,360,000
Notes Payable			
Total Notes and Bonds	$ 1,398,000	$ 1,379,000	$ 1,360,000
Total Liabilities	$ 1,555,392	$ 1,508,918	$ 1,501,984
Fund Equity:			
Contributed Capital	$ 1,772,487	$ 1,772,487	$ 1,772,487
Retained Earnings:			
Reserved	$ 110,858	$ 149,496	$ 168,487
Unreserved	$ 523,033	$ 513,167	$ 496,975
Total Fund Equity	$ 2,406,378	$ 2,435,150	$ 2,437,949
Total Liabilities and Fund Equity	$ 3,961,770	$ 3,944,068	$ 3,939,933
	0	0	0

KENTUCKY-AMERICAN WATER COMPANY
OWENTON WATER SYSTEM PURCHASE
HISTORICAL DATA

Income Statements

	6/30/2000	6/30/2001	6/30/2002
Revenues			
Water Sales	$ 612,082	$ 636,770	$ 659,208
Installations/reconnects	$ 17,355	$ 7,150	$ 8,800
Late Charges			
Other Income	$ 416	$ 1,351	$ 647
Total Operating Revenues	**$ 629,853**	**$ 645,271**	**$ 668,655**
Operating Expenses			
Fuel and Power	$ 63,231	$ 54,806	$ 59,095
Chemicals	$ 61,798	$ 75,361	$ 65,601
Supplies and Maint	$ 123,287	$ 77,559	$ 68,492
Payroll	$ 167,403	$ 168,430	$ 198,945
Payroll taxes	$ 14,150	$ 13,169	$ 15,428
Truck Expense	$ 9,450	$ 10,099	$ 11,852
Employee Benefits	$ 8,099	$ 8,313	$ 9,786
New Installations			
Total Operating Expenses	$ 447,418	$ 407,737	$ 429,199
Administrative & General			
Insurance	$ 27,555	$ 31,488	$ 37,124
Office Supplies & Expense	$ 9,369	$ 7,016	$ 7,214
Professional Fees	$ 14,055	$ 9,634	$ 24,350
Telephone	$ 1,758	$ 1,693	$ 2,519
Uncollectables	$ 545	$ 593	$ 5,089
Total Admin & General	$ 53,282	$ 50,424	$ 76,296
Depreciation	$ 101,989	$ 100,548	$ 99,127
KRA Fees	$ 5,420	$ 5,619	$ 5,704
All Other	$ 6,599	$ 6,390	$ 6,350
Total Operating Expenses	$ 614,708	$ 570,718	$ 616,676
Operating Income	**$ 15,145**	**$ 74,553**	**$ 51,979**
Non-Operating Items			
Interest Income	$ 16,756	$ 18,570	$ 14,315
Gain on Disposal of Assets	$ 2,000	$ -	
Interest Expense	$ (65,136)	$ (64,351)	$ (63,495)
Total Non-Operating Items	$ (46,380)	$ (45,781)	$ (49,180)
NET INCOME	**$ (31,235)**	**$ 28,772**	**$ 2,799**

KENTUCKY-AMERICAN WATER COMPANY
OWENTON WATER SYSTEM PURCHASE
HISTORICAL DATA

Statement of Cash Flows

	6/30/2000	6/30/2001	6/30/2002
Cash from Operations			
Operating Income (Loss)	$ 15,145	$ 74,553	$ 51,979
Depreciation	$ 101,989	$ 100,548	$ 99,127
(Incr)/Decr in Receivables	$ 4,328	$ (7,700)	$ (4,491)
Incr/(Decr) in Accts Payable	$ 23,783	$ (37,635)	$ 6,597
Net Cash from Operations	$ 145,245	$ 129,766	$ 153,212
Cash from Capital Activities			
Acquisition of fixed assets	$ (20,667)	$ (4,299)	$ (54,333)
Pricipal paid on LT debt	$ (17,000)	$ (17,000)	$ (19,000)
Interest Paid on LT debt	$ (65,332)	$ (64,547)	$ (63,714)
Cash used for Capital Activities	$ (102,999)	$ (85,846)	$ (137,047)
Cash from Investing Activities			
Interest Income	$ 16,735	$ 18,518	$ 14,594
Purchase investments	$ (8,465)	$ (9,775)	$ (7,406)
	$ 8,270	$ 8,743	$ 7,188
Net Decrease in Cash & Equivalents	$ 50,516	$ 52,663	$ 23,353
Add: Cash & Equivalents, Prior Year	$ 425,091	$ 475,607	$ 528,270
Cash & Equivalents, Year End	$ 475,607	$ 528,270	$ 551,623

KENTUCKY-AMERICAN WATER COMPANY
OWENTON SEWER SYSTEM PURCHASE
SUMMARY KEY PERFORMANCE INDICATORS

			Forecast Year 1	Forecast Year 2	Forecast Year 3	Forecast Year 4	Forecast Year 5
PROFIT & LOSS:							
	Revenue (Turnover)		$270,789	$301,472	$303,447	$305,422	$307,397
	EBITDA		$127,624	$152,970	$151,737	$150,397	$148,953
	Operating Result		$92,869	$117,116	$115,950	$115,363	$113,919
	Profit before Tax		$76,934	$77,678	$77,795	$78,476	$78,444
	Distributable profit		$46,930	$47,384	$47,455	$47,870	$47,851
	EBITDA Margin		47.13%	50.74%	50.00%	49.24%	48.46%
	Operating Result Margin		34.30%	38.85%	38.21%	37.77%	37.06%
	ROCE		8.65%	11.09%	11.36%	11.71%	11.99%
	Value Contribution		-$19,911	$6,218	$8,814	$11,945	$14,179
BALANCE SHEET & CASHFLOW:							
	Net Operating Assets		$2,002,993	$1,944,805	$1,886,685	$1,829,317	$1,771,949
	Net Debt		$637,418	$614,578	$596,681	$574,323	$551,874
	Operating Cash Flow		$81,684	$83,238	$83,242	$82,904	$82,885
	Equity Investment		$436,678	$423,663	$405,774	$393,097	$380,512
	Return on Equity		10.75%	11.18%	11.69%	12.18%	12.58%
OTHER:	Cost to Acquire		$998,850				
	Customers Acquired		603				
	Capex		$157,500	$3,125	$3,125	$3,125	$3,125
	Depreciation		$34,754	$35,854	$35,786	$35,034	$35,034
	Amortization Goodwill		$0	$0	$0	$0	$0
	OPEX (Excluding Depr)		$143,165	$148,501	$151,710	$155,024	$158,444
	OPEX as % Sales		52.87%	49.26%	50.00%	50.76%	51.54%
	Operating Result Per employee		$61,913	$78,077	$77,300	$76,909	$75,946
	Headcount all employees		1.5	1.5	1.5	1.5	1.5
	TRANSACTION MULTIPLES						
	TEV Revenues	4.5	Cost to acquire/Owenton revenues at 6/30/02				
	TEV EBIT	42.6	Cost to acquire/Owenton EBIT at 6/30/02				
	TEV EBITDA	11.8	Cost to acquire/Owneton EBITDA at 6/30/02				
	NET PP&E	0.5	Cost to acquire/Owenton Net PP&E at 6/30/02				
	Customers	$1,656	Cost to acquire/Owenton Customers at 11/30/02				

PROJECT VALUE CONTRIBTUTION: OWENTON SEWER SYSTEM PURCHASE					
	Forecast	Forecast	Forecast	Forecast	Forecast
	Year 1 (04)	Year 2 (05)	Year 3 (06)	Year 4 (07)	Year 5 (08)
Net Operating Result:					
Revenues	$270,789	$301,472	$303,447	$305,422	$307,397
Less:					
O & M Expense	$130,753	$136,395	$139,949	$143,604	$147,365
Depreciation	$34,754	$35,854	$35,786	$35,034	$35,034
Amortization	$0	$0	$0	$0	$0
General Taxes	$394	$438	$441	$444	$447
Property Taxes	$12,018	$11,669	$11,320	$10,976	$10,632
Net Operating Result	$92,869	$117,116	$115,950	$115,363	$113,919
Invested Capital:					
Total Capital	$1,074,096	$1,038,241	$1,002,455	$967,420	$932,386
Less:					
Cash	$0	($0)	$0	($0)	$0
Invested Capital	$1,074,096	$1,038,241	$1,002,455	$967,421	$932,386
Average Invested Capital	$1,074,096	$ 1,056,168	$ 1,020,348	$ 984,938	$ 949,903
Return on Invested Capital	8.65%	11.09%	11.36%	11.71%	11.99%
Hurdle Rate	10.50%	10.50%	10.50%	10.50%	10.50%
Operating Result to Meet Hurdle	$ 112,780	$ 110,898	$ 107,137	$ 103,418	$ 99,740
Value Contribution	$ (19,911)	$ 6,218	$ 8,814	$ 11,945	$ 14,179

KENTUCKY-AMERICAN WATER COMPANY

Valuation of:

OWENTON SEWER SYSTEM PURCHASE

Discounted Cash Flow Analysis - EBITDA Multiple Method

(Dollars in thousands)

Projections tie to accompany financial statements to be included in final packages yo prepare.

Calculation of Free Cash Flow

	Actual 2003	Projected 2004	Projected 2005	Projected 2006	Projected 2007	Projected 2008
EBITDA	$0	$128	$153	$152	$150	$149
Less: Depreciation & Amortization	0	(35)	(36)	(36)	(35)	(35)
EBIT	0	93	117	116	115	114
Taxes on EBIT [1] at 39%	0	(36)	(46)	(45)	(45)	(44)
Tax-effected EBIT	0	57	71	71	70	69
Plus: Depreciation & Amortization	0	35	36	36	35	35
Less: Capital Expenditures	0	(158)	(3)	(3)	(3)	(3)
Plus: Change in Cust. Advances & CIAC	0	48	3	3	3	3
+/- Change in Non-Cash Working Cap.	0	0	0	0	0	0
Free Cash Flow	$0	($19)	$107	$107	$105	$105

Notes:
(1) Taxes on EBIT calculated at composite rate for federal and state taxes.

Discount Rate		
WACC	6.37%	State Specific Economic Profit hurdle rate provided by Corporate Finance Dept.

Calculation of Terminal Value

TEV / EBITDA Factor	9.25	Average TEV / EBITDA multiple for publicly traded water utilities
EBITDA of 0 x	$149	Projected 2008 EBITDA
TEV:	$1,378	Projected 2008 Enterprise Value

Calculation of Discounted Cash Flow Valuation

	A +	B			=	C		
	Discounted Cash	PV of Terminal Value as a Multiple of 2008 EBITDA				Enterprise Value		
Discount Rate	Flows (2003-2007)	9.00	9.25	9.50		9.00	9.25	9.50
6.12%	$328	$996	$1,024	$1,051		$1,324	$1,351	$1,379
6.37%	**325**	984	**1,012**	1,039		1,309	**1,337**	1,364
6.62%	322	973	1,000	1,027		1,295	1,322	1,349

	- D =	E		
		Total Equity Value		
Discount Rate	Net Debt at 12/31/2003	9.00	9.25	9.50
6.12%	$0	$1,324	$1,351	$1,379
6.37%	**0**	1,309	**1,337**	1,364
6.62%	0	1,295	1,322	1,349

Terms
Net Debt = Debt (long term, current, and notes payable or bank debt) + preferred stock - cash
Equity Value = Value of Common Stock
Enterprise Value = Equity Value + Net Debt

Additional Comments / Assumptions:

$0	Pre-Tax Operating Synergies reflected in first year of projections ($ thousands)
$998,850	Proposed Purchase Price ($ thousands)
	Anticipated Closing Date
	Other: (Please provide detail)

	Forecast Year 1 (04)	Forecast Year 2 (05)	Forecast Year 3 (06)	Forecast Year 4 (07)	Forecast Year 5 (08)
VALUATION: OWENTON SEWER SYSTEM PURCHASE					
Revenues:					
Retail Customer Revenues	$270,789	$301,472	$303,447	$305,422	$307,397
AFUDC		$0	$0	$0	$0
Total (less AFUDC)	$270,789	$301,472	$303,447	$305,422	$307,397
YE ROE	10.75%	11.18%	11.69%	12.18%	12.58%
Total O&M Expenses	$130,753	$136,395	$139,949	$143,604	$147,365
Depreciation	$34,754	$35,854	$35,786	$35,034	$35,034
Amort Acq Adjustment	$0	$0	$0	$0	$0
General Taxes	$394	$438	$441	$444	$447
Property Taxes	$12,018	$11,669	$11,320	$10,976	$10,632
Total Operating Exp Before Taxes	$177,919	$184,356	$187,497	$190,059	$193,478
EBIT	$92,869	$117,116	$115,950	$115,363	$113,919
Depreciation/Amortization	$34,754	$35,854	$35,786	$35,034	$35,034
EBITDA	$127,624	$152,970	$151,737	$150,397	$148,953
		Cost	Pre-Tax	Weighted	
Weighted Cost of Capital	Ratio	Rate	Rate	Cost	
Acq. New Long-Term Debt	60.00%	6.30%	6.30%	3.78%	
Acq. New Common Equity	40.00%	10.25%	16.80%	6.72%	
Total Acq. Capitalization	100.00%			10.50%	

ACQUISITION FINANCING: OWENTON SEWER SYSTEM PURCHASE			Forecast	Forecast	Forecast	Forecast	Forecast
		Rate	Year 1 (04)	Year 2 (05)	Year 3 (06)	Year 4 (07)	Year 5 (08)
Purchase Price	$998,850		$998,850				
Estimated Cost to Acquire - Legal	$0		$0				
CAPX to Acquire (New Customers * CAPX Rate)			$0	$0	$0	$0	$0
CAPX to Acquire (Scheduled Investment)	$110,000		$157,500	$3,125	$3,125	$3,125	$3,125
LESS AFUDC			$0	$0	$0	$0	$0
Total Cap Required	$1,108,850		$1,156,350	$3,125	$3,125	$3,125	$3,125
Debt Assumed	$0	0.00%	$0	$0	$0	$0	$0
Prior Yr. Cash			$93,986	$50,825	$50,775	$50,128	$50,121
Total Cash Required	$1,108,850		$1,062,364	($47,700)	($47,650)	($47,003)	($46,996)
		2.50%					
New L-T Debt	$665,310	6.30%	$637,418	($22,840)	($17,897)	($22,358)	($22,449)
New Common Equity	$443,540		$424,946	($24,860)	($29,753)	($24,645)	($24,547)
	$1,108,850		$1,062,364	($47,700)	($47,650)	($47,003)	($46,996)
Planned YE CE%			40.00%	40.00%	40.00%	40.00%	40.00%
Total Interest Expense			$15,935	$39,438	$38,155	$36,887	$35,475
YE CE to Total Capital			40.66%	40.81%	40.48%	40.63%	40.81%
Return on YE Common Equity			10.75%	11.18%	11.69%	12.18%	12.58%

ACQUISITION BALANCE SHEET: OWENTON SEWER SYSTEM PURCHASE							
	@Pur Price	@Acq. Per Books	Forecast Year 1 (04)	Forecast Year 2 (05)	Forecast Year 3 (06)	Forecast Year 4 (07)	Forecast Year 5 (08)
ASSETS:							
Utility Plant	**$2,917,722**	$2,917,722	$2,917,722	$3,075,222	$3,078,347	$3,081,472	$3,084,597
Additions (cost to acq is initial)	$0	$0	$157,500	$3,125	$3,125	$3,125	$3,125
Retirements (estimate)			$0	$0	$0	$0	$0
Accum depreciation (adjusted)	**($1,012,016)**	($1,012,016)	($1,072,229)	($1,133,542)	($1,194,787)	($1,255,280)	($1,315,773)
Net Utility Plant	$1,905,706	$1,905,706	$2,002,993	$1,944,805	$1,886,685	$1,829,317	$1,771,949
Cash			$0	($0)	$0	($0)	$0
Acq Adjustment in Price	($0)	($0)	($0)	($0)	($0)	($0)	($0)
Acq. Contributions (adjusted)	**$0**	$0	$0	$0	$0	$0	$0
Acq. Advances	**$0**	$0	$0	$0	$0	$0	$0
Current Assets	**$0**	$0	$0	$0	$0	$0	$0
CWIP			$0	$0	$0	$0	$0
Total Assets	$1,905,706	$1,905,706	$2,002,993	$1,944,805	$1,886,685	$1,829,317	$1,771,949
LIABILITIES & EQUITY:							
Current Liabilities	**$0**	$0	$0	$0	$0	$0	$0
Long Term Debt							
Assumed	$0	$0	$0	$0	$0	$0	$0
Issued	$599,310	$599,310	$637,418	$614,578	$596,681	$574,323	$551,874
Common Equity	$399,540	$399,540	$436,678	$423,663	$405,774	$393,097	$380,512
Total Cap	$998,850	$998,850	$1,074,096	$1,038,241	$1,002,455	$967,420	$932,386
Net Working Capital	$0	$0	$0	$0	$0	$0	$0
Advances	$0	$0	$0	$0	$0	$0	$0
Gross CIAC	**$1,275,146**	$1,275,146	$1,322,646	$1,325,771	$1,328,896	$1,332,021	$1,335,146
Accum Amortization CIAC	**($368,290)**	($368,290)	($393,749)	($419,207)	($444,666)	($470,125)	($495,583)
Total Cap & Liabilities	$1,905,706	$1,905,706	$2,002,993	$1,944,805	$1,886,685	$1,829,317	$1,771,949
			$0	$0	$0	$0	$0

ACQUISITION CAPITAL STRUCTURE: OWENTON SEWER SYSTEM PURCHASE					
	Forecast Year 1 (04)	Forecast Year 2 (05)	Forecast Year 3 (06)	Forecast Year 4 (07)	Forecast Year 5 (08)
Debt	$637,418	$614,578	$596,681	$574,323	$551,874
% of Total Cap	59.34%	59.19%	59.52%	59.37%	59.19%
CE	$436,678	$423,663	$405,774	$393,097	$380,512
% of Total Cap	40.66%	40.81%	40.48%	40.63%	40.81%
Total Cap	$1,074,096	$1,038,241	$1,002,455	$967,420	$932,386
CE EOY% TO TOT CAP	40.66%	40.81%	40.48%	40.63%	40.81%

ACQUISITION INCOME STATEMENT: OWENTON SEWER SYSTEM PURCHASE					
	Forecast Year 1 (04)	Forecast Year 2 (05)	Forecast Year 3 (06)	Forecast Year 4 (07)	Forecast Year 5 (08)
Total Revenue/Income	$270,789	$301,472	$303,447	$305,422	$307,397
O&M, Depr, Taxes Other	$177,919	$184,356	$187,497	$190,059	$193,478
Pre-Tax UOI	$92,869	$117,116	$115,950	$115,363	$113,919
Interest Expense	$15,935	$39,438	$38,155	$36,887	$35,475
Pre-Tax Income	$76,934	$77,678	$77,795	$78,476	$78,444
Income Tax Rate	39.00%	39.00%	39.00%	39.00%	39.00%
Income Taxes Net of AFUDC	$30,004	$30,294	$30,340	$30,606	$30,593
Income After Tax	$46,930	$47,384	$47,455	$47,870	$47,851
Acq. Adj. Amortization	$0	$0	$0	$0	$0
Net to CE	$46,930	$47,384	$47,455	$47,870	$47,851
Pre-tax Interest Coverage	5.83	2.97	3.04	3.13	3.21
ROE YE Equity	10.75%	11.18%	11.69%	12.18%	12.58%
Beginning CE		$436,678	$423,663	$405,774	$393,097
New Equity	$424,946	($24,860)	($29,753)	($24,645)	($24,547)
Net Income	$46,930	$47,384	$47,455	$47,870	$47,851
Dividends	$35,198	$35,538	$35,591	$35,902	$35,888
RE	$11,732	$11,846	$11,864	$11,968	$11,963
CE 12/31	$436,678	$423,663	$405,774	$393,097	$380,512
Avg. ROE Earned	11.68%				

ACQUISITION STATEMENT OF CASH FLOWS: OWENTON SEWER SYSTEM PURCHASE					
	Forecast Year 1 (04)	Forecast Year 2 (05)	Forecast Year 3 (06)	Forecast Year 4 (07)	Forecast Year 5 (08)
Cash Flows from Operating Activities:					
Net to CE	$46,930	$47,384	$47,455	$47,870	$47,851
Adjust:					
AFUDC	$0	$0	$0	$0	$0
Depreciation	$34,754	$35,854	$35,786	$35,034	$35,034
Amortization	$0	$0	$0	$0	$0
Net Cash from Operations	$81,684	$83,238	$83,242	$82,904	$82,885
Cash Flows from Investing Activities:					
Acquisition/Cost to Acquire	($998,850)				
Construction Expenditures	($157,500)	($3,125)	($3,125)	($3,125)	($3,125)
Net Cash from Investing	($1,156,350)	($3,125)	($3,125)	($3,125)	($3,125)
Cash Flows from Financing Activities:					
Add: Tap Fees	$47,500	$3,125	$3,125	$3,125	$3,125
Long Term Debt	$637,418	($22,840)	($17,897)	($22,358)	($22,449)
Common Stock	$424,946	($24,860)	($29,753)	($24,645)	($24,547)
Deduct:					
Dividends	($35,198)	($35,538)	($35,591)	($35,902)	($35,888)
Net Cash from Financing	$1,074,666	($80,113)	($80,116)	($79,780)	($79,759)
Cash for Year	$0	($0)	$0	($1)	$1
Cash 1/1	$0	$0	($0)	$0	($0)
Cash 12/31	$0	($0)	$0	($0)	$0

KENTUCKY-AMERICAN WATER COMPANY
OWENTON SEWER SYSTEM PURCHASE
HISTORICAL DATA

Balance Sheet

	6/30/2000	6/30/2001	6/30/2002
Assets			
Cash	$ 70,365	$ 62,416	$ 59,303
Investments	$ 87,419	$ 88,661	$ 89,609
AR, net	$ 32,997	$ 33,493	$ 29,904
Other Rec.	$ 19,992	$ 1,159	$ 1,159
Interest Rec.	$ 957	$ 949	$ 543
Inventory	$ 1,018	$ 1,169	$ 1,469
Prepaids	$ 3,517	$ 1,370	$ 208
Total Current Assets	$ 216,265	$ 189,217	$ 182,195
Restricted Assets:	$ 270,690	$ 240,858	$ 253,147
Fixed Assets:			
Property, plant and equipment	$ 2,907,870	$ 2,917,722	$ 2,917,722
Less accumulated depreciation	$ (829,610)	$ (890,789)	$ (951,903)
Total Net Fixed Assets	$ 2,078,260	$ 2,026,933	$ 1,965,819
Total Assets	$ 2,565,215	$ 2,457,008	$ 2,401,161
Liabilities and Fund Equity			
Current Liabilities			
Accounts Payable	$ 25,496	$ 11,532	$ 2,753
Accrued liabilities	$ 51,484	$ 55,051	$ 63,894
Current maturities Notes Payable	$ 22,000	$ 23,000	$ 25,000
Accrued Interest			
Customer Deposits	$ -	$ -	$ -
Total Current Liabilities	$ 98,980	$ 89,583	$ 91,647
Long-Term Liabilities			
Bonds Payable	$ 1,281,000	$ 1,258,000	$ 1,233,000
Notes Payable			
Total Notes and Bonds	$ 1,281,000	$ 1,258,000	$ 1,233,000
Total Liabilities	$ 1,379,980	$ 1,347,583	$ 1,324,647
Fund Equity:			
Contributed Capital	$ 1,275,146	$ 1,275,146	$ 1,275,146
Retained Earnings:			
Reserved	$ -	$ -	$ -
Unreserved	$ (89,911)	$ (165,721)	$ (198,632)
Total Fund Equity	$ 1,185,235	$ 1,109,425	$ 1,076,514
Total Liabilities and Fund Equity	$ 2,565,215	$ 2,457,008	$ 2,401,161

KENTUCKY-AMERICAN WATER COMPANY
OWENTON SEWER SYSTEM PURCHASE
HISTORICAL DATA

Income Statements

	6/30/2000	6/30/2001	6/30/2002
Revenues			
Sales	$ 233,432	$ 216,646	$ 219,299
Installations/reconnects	$ 4,500	$ 625	$ 2,500
Late Charges			
Other Income	$ 396	$ 488	$ 141
Total Operating Revenues	**$ 238,328**	**$ 217,759**	**$ 221,940**
Operating Expenses			
Fuel and Power	$ 16,190	$ 16,364	$ 16,584
Chemicals	$ 181	$ 90	$ 323
Supplies and Maint	$ 9,482	$ 28,230	$ 14,572
Payroll	$ 80,450	$ 80,546	$ 64,831
Payroll taxes	$ 7,068	$ 6,290	$ 5,196
Truck Expense	$ 734	$ 284	$ 10
Employee benefits	$ 4,023	$ 4,038	$ 3,204
Total Operating Expenses	$ 118,128	$ 135,842	$ 104,720
Administrative & General			
Insurance	$ 18,391	$ 19,710	$ 16,485
Office Supplies & Expense	$ 2,994	$ 2,620	$ 1,812
Professional Fees	$ 4,580	$ 12,472	$ 3,585
Telephone	$ 765	$ 850	$ 1,062
Uncollectables	$ 2,453	$ 1,606	$ 7,340
Total Admin & General	$ 29,183	$ 37,258	$ 30,284
Depreciation	$ 61,012	$ 61,180	$ 61,114
All Other	$ 3,522	$ 3,968	$ 2,350
Total Operating Expenses	$ 211,845	$ 238,248	$ 198,468
Operating Income	**$ 26,483**	**$ (20,489)**	**$ 23,472**
Non-Operating Items			
Interest Income	$ 9,144	$ 9,004	$ 6,805
Gain on Disposal of Assets			
Interest Expense	$ (65,413)	$ (64,325)	$ (63,188)
Total Non-Operating Items	$ (56,269)	$ (55,321)	$ (56,383)
NET INCOME	**$ (29,786)**	**$ (75,810)**	**$ (32,911)**

KENTUCKY-AMERICAN WATER COMPANY
OWENTON SEWER SYSTEM PURCHASE
HISTORICAL DATA

Statement of Cash Flows

	6/30/2000	6/30/2001	6/30/2002
Cash from Operations			
Operating Income (Loss)	$ 26,483	$ (20,489)	$ 23,472
Depreciation	$ 61,012	$ 61,180	$ 61,114
(Incr)/Decr in Receivables	$ 648	$ (456)	$ 3,589
Incr/(Decr) in Accts Payable	$ (17,379)	$ 35,631	$ 1,213
Net Cash from Operations	$ 70,764	$ 75,866	$ 89,388
Cash from Capital Activities			
Acquisition of fixed assets	$ (54,532)	$ (34,427)	$ -
Pricipal paid on LT debt	$ (21,000)	$ (22,000)	$ (23,000)
Interest Paid on LT debt	$ (65,675)	$ (64,990)	$ (63,475)
Cash used for Capital Activities	$ (141,207)	$ (121,417)	$ (86,475)
Cash from Investing Activities			
Interest Income	$ 9,133	$ 9,012	$ 7,211
Purchase investments	$ (1,176)	$ (1,242)	$ (948)
	$ 7,957	$ 7,770	$ 6,263
Net Decrease in Cash & Equivalents	$ (62,486)	$ (37,781)	$ 9,176
Add: Cash & Equivalents, Prior Year	$ 403,541	$ 341,055	$ 303,274
Cash & Equivalents, Year End	$ 341,055	$ 303,274	$ 312,450

VI. Next Steps

- **Submission of Business Development Package to KAWC Board for approval to purchase the City of Owenton's water and sewer assets**
- **Final due diligence and signing of Purchase Agreement**
- **IP submitted to KAWC Board for approval**
- **Petition filed with PSC for approval of Project**
- **Project turned over to KAWC operations for integration into KAWC system**

VII. Draft Purchase Agreement

ASSET PURCHASE AGREEMENT

THIS ASSET PURCHASE AGREEMENT ("Agreement") is entered into on this ____ day of _____, 2003, between **the City of Owenton, Kentucky** ("Seller"), a city of the 5th class in Kentucky, with its mailing address at 220 South Main Street, Owenton, Kentucky 40359 and **Kentucky American Water Company** ("Buyer"), a Kentucky corporation, with its principal offices at 2300 Richmond Road, Lexington, Kentucky 40502, which agree as follows:

1. **PURCHASE OF ASSETS**. Seller hereby agrees to sell to Buyer on the Closing Date identified in paragraph 12 herein, and Buyer hereby agrees to purchase, free and clear of all liens, claims and encumbrances, all of Seller's tangible assets devoted to the provision of potable water service and wastewater service to the public, whether or not carried on or reflected in Seller's books and records. The purchase shall include the tangible assets of Seller's potable water system and wastewater system and all interest Seller has in real property, whether license, easement, fee simple, or any other type of ownership, ("collectively referred to as the Assets") which are listed in Exhibits 1 and 2. Although Exhibits 1 and 2 are intended to be complete, to the extent Seller on the date of this Agreement owns any assets which are needed to operate the potable water system or wastewater system that should be but are not included in the exhibits, such assets nonetheless shall be transferred to Buyer on the Closing Date.

2. **CONSIDERATION**. In consideration of the sale of such Assets, Buyer shall pay to Seller on the Closing Date, the sum of $2,851,478 (two million eight hundred fifty one thousand, four hundred seventy eight dollars) ("The Proposal"), adjusted for (i) any difference between the actual change in Book Value and the pro forma change in Book Value used to arrive

at an estimated Book Value at the end of FYE June 30, 2003 for purposes of the Proposal and (ii) for the net increase or decrease in the Book Value of the assets subsequent to June 30, 2003 (Book Value is defined for purposes of this agreement as gross utility plant, less book depreciation and less contributions in aid of construction), the sufficiency of which is acknowledged by Seller. In the event Seller acquires or disposes of tangible assets devoted to the provision of utility service subsequent to the date of this Agreement, the purchase price shall be adjusted to reflect the net book value of those assets on the Closing Date. As further consideration of the sale of the Assets, Seller agrees that the transaction is conditioned on approval by the Public Service Commission of the Commonwealth of Kentucky ("PSC") of a Use Fee in lieu of property tax as defined in Section 22 hereof, said use fee being paid to Seller by Buyer to service debt of at least $300,000 toward capital improvements to the water and wastewater systems within the city limits. Also, as a condition of the sale of the Assets, Seller will set aside $300,000 of the proceeds from the sale of the Assets until such time as the PSC has ruled on the Use Fee. If the Use Fee is not approved or if the Use Fee approved is not adequate to service $300,000 in debt, the money set aside from the proceeds will be immediately contributed by Seller to Buyer toward the capital improvements of the systems in an amount equal to the difference between $300,000 and the actual debt serviced by the Use Fee approved. Said contribution to capital improvements to be in Buyer's determination after consulting with Seller.

3. **WARRANTIES**.

Seller represents and warrants to Buyer as follows as of the date of this Agreement and as of the Closing Date:

(A) Seller is a city of the 5th class in Kentucky with the requisite right, power and authority (i) to carry on its business as is now being conducted and (ii) to own, lease or operate its properties, which it currently owns, leases, or operates. Seller has, and at all times has had, full power and authority to own its properties and to conduct its business.

(B) Seller has full capacity, right, power and authority to enter into, deliver, and perform this Agreement. Prior to closing, all consents, approvals, authorizations, or other requirements prescribed by law, rule or regulation which must be obtained or satisfied by Seller and are necessary in order for it to enter into and perform this Agreement have been satisfied. This Agreement has been duly executed and delivered by Seller and constitutes its legal, valid and binding obligation, enforceable against Seller in accordance with its terms.

(C) The execution, delivery, and performance of and the consummation of the transactions contemplated in this Agreement do not and will not: (i) conflict with or result in a violation or breach of any of the terms, conditions, or provisions of or constitute a default of the Seller's governance documents or any instrument, loan, grant, contract, bond, agreement, mortgage, judgment, order, writ, award, decree, or other restriction to which Seller is a party, or to which any of its Assets are subject, or by which Seller is bound or any statute or regulatory provision affecting Seller, (ii) require the approval, consent, or authorization of any federal, state, or local court, governmental authority, or regulatory body (except as provided in paragraph 11 of this Agreement) or of any creditor or seller or of any person or entity, nor (iii) give any party with rights under any instrument, agreement, mortgage, judgment, order, writ, award, decree or other restriction the right to terminate, modify, or otherwise change the Seller's rights or obligations thereunder.

(D) Seller has complied with all existing laws, rules, regulations, ordinances, orders, instruments, contracts, loans, grants, bonds, agreements, judgments and decrees now or hereafter applicable to the Assets. Seller is not aware of any proposed laws, rules, regulations, ordinances, orders, judgments, decrees, governmental takings, condemnations, or other proceedings which would be applicable to the Assets or which might adversely affect the Assets either before or after the date of this Agreement, other than as listed in Exhibit 3.

(E) Seller has not received any notice or notification from any court or governmental agency, authority, or body that it is in violation of or not in compliance with any federal, state, or local law, statute, ordinance, rule, regulation, guideline (including voluntary guidelines), decree, or order or permit relating to the Assets or that upon the passage of time it will be in violation of any of the foregoing. Seller's operation of its water and wastewater systems complies in all respects with all governmental requirements relating to the provision of potable water service and wastewater system operation.

(F) Seller has good, marketable, and insurable title to all of the Assets. None of the Assets will, after closing, be subject to any mortgage, pledge, lien, charge, security interest, encumbrance, restriction, lease, license, easement, liability or adverse claim of any nature whatsoever, direct or indirect, whether accrued, absolute contingent or otherwise. All the Assets are in good operating condition and repair and are suitable for the purposes used.

(G) No other person or entity now has, nor at any time in the future will have, the right to purchase, own, use, or sell any of the Assets.

(H) Seller is not insolvent. Seller is able to meet all business obligations as they become due and will not be insolvent or unable to meet its business obligations as a result of completing the transactions described herein.

(I) All tax returns, if applicable, employee withholding forms and other tax-related documents, of every kind relating to Seller and the Assets that are due to be filed in accordance with any applicable law have been duly filed and all taxes and benefits shown to be due on such returns have been paid in full.

(J) Seller has delivered to Buyer copies of 2002 and 2003 (when available) audited and unaudited financial statements, which are complete and correct and have been prepared from Seller's books and records in accordance with generally accepted accounting principles consistently applied and maintained throughout the periods indicated and fairly present the Seller's financial condition. Except as set forth in the financial statements, Seller has no debts, liabilities or obligations (whether absolute, accrued, contingent or otherwise), of any nature whatsoever including, without limitation,

any other debts, liabilities or obligations relating to or arising out of any act, omission, transaction, circumstance, except those incurred in the ordinary course of Seller's business. There is not any condition or event which could materially or adversely affect the Assets.

(K) With the exception of the legal proceedings listed in Exhibit 3, there is no claim, legal action, suit, arbitration, governmental investigation or other legal or administrative proceeding, nor any order, decree or judgment in progress, pending or in effect, or threatened, against or relating to Seller, its officers, directors, employees or business, the Assets, or the transactions contemplated by this Agreement, and Seller neither knows nor has reason to be aware of any basis for the same. After the execution of this Agreement Seller will take all actions necessary to assist Buyer in pursuing the claims addressed in the legal proceedings described in Exhibit 3. Each of the parties will be responsible for its costs incurred in such legal proceedings.

(L) Between the date of this Agreement and the Closing Date Seller shall conduct its business diligently and substantially in the same manner as heretofore conducted prior to the date of this Agreement. Prior to the Closing Date Seller shall not change its rates or charges without Buyer's approval and shall not institute any new methods of accounting or operation or engage in any transaction or activity, enter into any agreement or make any commitment except in the ordinary course of business and consistent with past practice.

(M) Seller shall not prior to the Closing Date permit any Assets to be subjected to a mortgage, pledge, lien or encumbrance, without notice to and approval of Buyer, and further shall not dispose of such Assets. Prior to the Closing Date Seller shall not acquire any asset devoted to serving the public costing more than One Thousand Dollars ($1,000.00) without the approval of Buyer.

(N) Seller shall maintain until the Closing Date the insurance policies in effect on the Assets.

(O) Seller shall not perform any act or omit to perform any act or permit any act or omission that will cause a breach or default in this Agreement.

(P) No representation or warranty by Seller in this Agreement nor any statement or certificate furnished or to be furnished by Seller to Buyer or its representatives in connection herewith or pursuant hereto contains or will contain any untrue statement of a material fact or will omit a statement of any material fact required to make the statements herein or therein contained not misleading. Seller has disclosed to Buyer in writing all material adverse facts known to it relating to the Assets. Seller is not aware of any circumstances or facts which could be detrimental to the Assets other than those disclosed to the Buyer in writing.

(Q) Seller has provided to Buyer all of its records regarding the operation of this water and wastewater system for calendar year 1998 through the present.

4. **LIABILITIES**. Buyer is not assuming any of Seller's liabilities or debts. All of Seller's debts and liabilities will be settled prior to or on the Closing Date and any debts outstanding on the Closing Date will remain Seller's sole obligation and will be paid by Seller under this Agreement. Consistent with Seller's obligation to remove all debts from the Assets, Seller will, on the Closing Date, utilize as much of the purchase price as is necessary to pay off all outstanding secured obligations.

5. **OPERATION OF WATER AND WASTEWATER SYSTEMS**. Buyer shall own and operate the water and wastewater systems acquired from Seller and all customers currently served by Seller shall, for all intents and purposes, be customers of Buyer. Said customers shall, after the Closing Date, be charged at those rates and charges for such customers as from time to time are approved for use for such customers by Buyer by the PSC. Buyer as of the Closing Date will specifically assume Seller's obligations under all other contracts to which Seller may be bound as of the date of this Agreement, all as listed in Exhibit 4 except the Water Purchase Agreement as it may have been amended, which is herby terminated.

6. **EMPLOYEES**. Buyer agrees to offer employment to Seller's employees, at mutually agreed upon compensation levels, who are listed in Exhibit 5, provided that such employees pass the examinations, background check and other screening tests routinely required of applicants for employment with Buyer. The employees meeting such requirements will be employed, on an at will basis, as the Buyer's full-time employees with benefits comparable to the Buyer's employees performing the same tasks as listed in Exhibit 6, although Buyer and Seller recognize that the specific duties and responsibilities of said employees may be different from duties and responsibilities of Buyer's existing employees at other geographic locations and may be subject to different supervisory oversight and reporting. The employees shall be deemed to have been employed by Buyer on the dates indicated in Exhibit 5 for the limited purpose of determining vacation or sick pay benefits with Buyer.

7. **FINAL METER READING AND BILLING**. At least one week prior to the Closing Date Seller will provide Buyer with a current list of the names and addresses of the Seller's customers. Within the week prior to the Closing Date, Buyer's meter readers, accompanied at the Seller's election, by Seller's meter readers, will read all customer meters and provide copies of those meter readings to Seller. Seller will bill all customers for water service as reflected in the final meter reading. Seller will, after satisfaction of all routine customary expenses of Seller through the Closing Date use any monies received from these billings in addition to all monies from all accounts receivable from prior billings for the payment of any other of the Seller's liabilities remaining at the closing. Buyer will be entitled to all revenue from water services provided by Buyer on and after the Closing Date.

8. **OPERATION OF UPPER AND LOWER THOMAS LAKES ("Lakes").** Seller will grant Buyer the right to use the Lakes as an emergency source of supply at no additional cost to Buyer, including the right to pump water into and withdraw water from the Lakes and the right to increase or decrease the level of water in the Lakes. Seller agrees not to take or allow any action that would cause any pollution or detrimental effect on the quality of the water in the Lakes. Seller agrees to maintain the surrounding land, including the dam, in a safe and operational condition. This shall be a right that attaches to the real estate and passes with the title.

9. **OFFICE IN OWENTON.** Buyer agrees to maintain an office in Owenton for walk-in customer service purposes.

10. **GRANT REPAYMENT.** In the event that any grant existing at the date of closing is later required to be repaid, Seller assumes all liability for such repayment.

11. **PUBLIC SERVICE COMMISSION APPROVAL.** Within ninety (90) days from the satisfaction of the conditions precedent described in paragraph 17 (C), (D), (E), (F), (G), (H) and (I) and both Seller and Buyer agree to file and pursue with diligence a Joint Application with the PSC seeking complete approval of this Agreement.

12. **CLOSING DATE.** The closing of this Agreement shall take place within sixty (60) days after the latest of (a) receipt of an acceptable final order from the PSC approving this Agreement, and no appeal having been taken from the issuance of such order, and (b) receipt of any other required waivers or consents to the transfer of the water system, and (c) completion of all conditions precedent as provided in Section 17 hereof.

13. **CONVEYANCE AND TRANSFERS**. Seller will not convey, lease or in any way dispose of the Assets, which it holds as of the date of this Agreement. On the Closing Date Seller shall transfer and convey to Buyer, its successors and assigns forever, the Assets together with all files, plats, maps, plans, records and ledgers or copies thereof in any way connected with rendition of water service by Seller.

14. **ACCESS TO BOOKS**. Between the date of this Agreement and the Closing Date Buyer shall have the right to examine all of Seller's assets and to obtain copies of all Seller's books and records at such reasonably convenient times as Buyer may require. In the event the transaction contemplated by this Agreement is not consummated, all such copies of the inventory and books and records shall be returned to Seller. If prior to the Closing Date (a) any material discrepancies are discovered in the Seller's books and records (b) any claims, liabilities, liens, encumbrances or defects in title which would materially affect the value of the Assets are discovered by or disclosed to Buyer, or (c) any one of the representations and warranties set forth in this Agreement is determined by Buyer not to be true and correct, Buyer may at its sole option terminate this Agreement and neither Buyer nor Seller shall be further obligated hereunder or incur or be liable for any claim, loss, damage or expenses to the other as a result of such termination.

15. **BINDING EFFECT**. This Agreement shall be binding upon and shall inure to the benefit of the parties hereto and their respective successors and assigns.

16. **FORCE MAJEURE**. If the performance of any of the covenants or agreements contained herein is delayed or prevented by reasons beyond the Buyer's or Seller's control such as an act of God, act of war, strike, walkout, restraint of labor, from whatever cause, either

partial or general, riot or civil commotion, order of court or administrative tribunal having jurisdiction over either party hereto, then the affected party shall be excused from such performance to the extent that the affected party is necessarily prevented, hindered or delayed thereby during the continuance of any such happening or event and the time for such performance shall be extended to commensurate with such delays provided that the affected party shall notify the other party of the happening of such event or force majeure within a reasonable time after the affected party acquires knowledge thereof.

17. **CONDITIONS PRECEDENT**. The parties hereto understand and agree that this Agreement and the obligations of the parties hereunder are expressly conditioned on the following, each of which is a condition precedent to the closing and the validity and enforceability of the Agreement:

(A) The PSC shall have entered a final order (from which no appeal is taken) which approves the Joint Application to be filed by Buyer and Seller including (i) any specific rate making approach or request as set forth in the Joint Application, (ii) a request for the use of Buyer's existing rules and regulations for Seller's water and wastewater customers, (iii) a request for the use of the Seller's existing rates to its customers as may be changed from time to time and as approved by the Public Service Commission, and (iv) this Agreement and all of its terms, conditions, undertakings, agreements and limitations between Buyer and Seller.

(B) The PSC, nor any court, shall not have attached to any order, any terms, conditions or limitations which in the sole opinion of either the Buyer or the Seller shall adversely affect the economic feasibility of this project or the Agreement between the parties or require Buyer or Seller to take any action or refrain from taking any action which might require

either of them to breach any of their obligations under any mortgage indenture, as supplemented, or any other agreement to which either of them might be a party.

(C) Buyer and Seller shall have received all consents or waivers to the sale of the Assets.

(D) Buyer shall have determined that the assets are free from the presence or harmful effects of any hazardous or toxic substances, including, but not limited to, petroleum products and asbestos in friable form. Buyer shall be permitted to make or obtain such inspections and/or testing of the assets as may be desired by Buyer using such experts or consultants as Buyer deems desirable. In the event any of the inspections of testing made or obtained by Buyer reveal a condition of the assets which is not acceptable to Buyer, Buyer shall notify Seller, in writing, of such fact within ninety (90) days from the date of execution of this Agreement.

(E) Buyer's Board of Directors shall have approved the execution of this Agreement.

(F) Prior to the Closing Date there shall be a written determination from all appropriate authorities that Buyer shall have no obligation to repay any monetary obligations of Seller.

(G) Water quality shall be acceptable to Buyer.

(H) If applicable, the PSC shall have approved a certificate of convenience and necessity for Buyer regarding this transaction and such order shall not have been appealed.

(I) Except as may be specifically agreed to by Buyer elsewhere in this Agreement, there shall not be or have been any material or adverse changes in the Assets or financial condition of Seller, as determined by Buyer's discretion.

(J) Seller shall have granted a 20-year, non-exclusive franchise, at no further cost to Buyer, to serve the City and citizens of Owenton.

18. **INDEMNITY AGREEMENT**. Seller agrees to indemnify and hold harmless Buyer against any loss, claim, action, suit, proceeding, deficiency or expense (including attorneys' fees) relating to or arising from or in connection with (a) any misrepresentation, breach of representation, warranty or obligation, covenant or agreement or default by Seller under this Agreement (including the Exhibits) or any documents delivered to Buyer in connection with this Agreement; (b) claims of negligence or strict liability in connection with the Assets or the business conducted prior to the Closing Date; (c) all debts, liabilities, contracts or obligations whatsoever relating to the Assets prior to the Closing Date, or (d) all contingent liabilities relating to Seller, its business or the Assets which Buyer becomes obligated to pay with respect to any state of facts or occurrences existing at or prior to the Closing Date.

19. **UTILITY BOARD.** The Owenton Utility Board ("Utility Board") shall remain in place to serve as an advisor on growth and capital investment issues. The Seller through its Utility Board may partner with the Buyer to extend service and upgrade facilities. The Utility Board shall meet with Buyer on a regular basis no less than quarterly.

20. **ENTIRE AGREEMENT**. This Agreement, including all of its Exhibits, which are hereby incorporated by reference, constitutes the entire agreement of the parties with respect to the subject matter hereof and may not be modified or amended or terminated except by written agreement specifically referring to this Agreement, and signed by all of the parties hereto.

21. **GOVERNING LAW**. This Agreement and all amendments hereto shall be governed and construed in accordance with the laws of the Commonwealth of Kentucky.

22. **USE FEE**. For purposes of this Agreement, the Use Fee is defined as a fee in lieu of property taxes recovered in rates charged to customers. Said Use Fee is to be paid by Buyer to Seller for the purpose of Seller paying debt service on monies borrowed to be invested in water system capital improvements. Once the transaction contemplated by this Agreement is consummated, Buyer will take all available legal means to transfer legal title of the Improved Assets ("Improved Assets under this section means the Assets included by definition under this Agreement plus any subsequent capital improvements to be transferred by the Buyer to the Seller as determined by the Buyer") to the Seller, subject to the lien of the Company's General Mortgage Indenture, in exchange for tax-exempt bonds issued by the Seller in an amount equal to the Buyer's cost of the Improved Assets. The Seller then leases the Improved Assets to the Buyer. The Buyer operates and uses the Assets under a capital lease from the Seller, but the Seller continues to hold legal title while the tax-exempt bonds are outstanding. The Seller, by statute, has no liability with respect to the tax-exempt bonds or the Improved Assets. All obligations with respect to the

Improved Assets are contractually assumed by the Buyer. The Seller, the legal owner of the Improved Assets, pays no property taxes on the Improved Assets thus allowing the Buyer to include a Use Fee equal to the avoided property taxes in its cost of service for determining rates.

IN WITNESS WHEREOF, the parties have caused this Agreement to be duly executed by their duly authorized representatives, and a copy of the resolution from the Seller is attached, this the day and year first above written.

CITY OF OWENTON

_____ BY: _____
Attest Mayor

KENTUCKY-AMERICAN WATER COMPANY

_____ BY: _____
Witness President

Exhibit 1
Assets

Exhibit 1								
List of Assets - Owenton Water and Sewer								
Owenton Waterworks								
Audit Report								
Year ended: June 30, 2002								
Kind of property	**Date**	**Method Life Rate**	**Balance at 7/1/01**	**FYE 2002 Additions**	**FYE 2002 Retirements**	**Balance at 6/30/02**	**Accum. Depreciation as of 6/30/02**	**CIAC as of 6/30/02**
Land & Rights of Way								
Land & Rights of Way	1933	n/a	1,293.46			1,293.46	-	
Land & Rights of Way	1941	n/a	1,160.00			1,160.00	-	
Land & Rights of Way	1944	n/a	1,000.00			1,000.00	-	
Land & Rights of Way	1960	n/a	2,560.00			2,560.00	-	
Land & Rights of Way	1969	n/a	4,080.00			4,080.00	-	
Land & Rights of Way	1977	n/a	7,619.29			7,619.29	-	
Virgil Cobb Easement	Jun-88	n/a	3,031.50			3,031.50	-	
Land - 75M gallon tanksite dismantled	1990	n/a	6,543.13			6,543.13	-	
Land - Water Plant	1994	n/a	9,286.00			9,286.00	-	
						-	-	
						-	-	
						-	-	
						-	-	
Subtotal Land & ROW			36,573.38	-	-	36,573.38	-	
Roads & Power Lines								
Roads & Power Lines	1933	n/a	4,527.11			4,527.11	-	
Roads & Power Lines	1941	n/a	4,060.00			4,060.00	-	
Roads & Power Lines	1944	n/a	3,500.00			3,500.00	-	
Roads & Power Lines	1960	n/a	8,960.00			8,960.00	-	
Roads & Power Lines	1969	n/a	14,280.00			14,280.00	-	
Roads & Power Lines	1977	n/a	20,591.33			20,591.33	-	
						-	-	
						-	-	
						-	-	
						-	-	
Subtotal - Roads and Power Lines			55,918.44	-	-	55,918.44	-	
Buildings & Improvements								
Barn	Jan-85	SL-10	6,000.00			6,000.00	6,000.00	
Rrestroom improvements	Apr-87	SL-10	287.00			287.00	287.00	
Addition - Maintenance Bldg.	Dec-90	SL-10	1,930.46			1,930.46	1,930.46	
Addition to Red Barn	Jun-92	SL-10	1,400.00			1,400.00	1,400.00	
Storage Building	Jun-02	SL-10		21,495.00		21,495.00	179.00	
						-	-	
						-	-	
						-	-	
						-	-	
Subtotal - Buildings & Improvements			9,617.46	21,495.00	-	31,112.46	9,796.46	

Furniture & Fixtures								
Furniture & Fixtures	1977	SL-10	1,019.55			1,019.55	1,019.55	
Posting machine (1/2)	1978	SL-10	4,220.91			4,220.91	4,220.91	
Copier	Feb-84	SL-5	833.75			833.75	833.75	
Typewriter (1/2)	Jun-85	SL-5	318.00			318.00	318.00	
Table	Jan-86	SL-10	158.00			158.00	158.00	
Fire Proof Cabinet	Nov-89	SL-10	300.00			300.00	300.00	
Computer	Jun-91	SL-5	2,737.50			2,737.50	2,737.50	
Copier (1/2)	Jun-96	SL-5	1,557.50			1,557.50	1,557.50	
PS 120 Computer	Jun-96	SL-5	2,311.93			2,311.93	2,311.93	
						-	-	
						-	-	
						-	-	
						-	-	
Subtotal - Furniture & Fixtures			13,457.14	-	-	13,457.14	13,457.14	
Distribution System								
Distribution System	1933	SL-50	51,231.32			51,231.32	51,231.32	
Distribution System	1960	SL-50	116,480.00			116,480.00	99,207.00	
Distribution System	1969	SL-50	185,640.00			185,640.00	119,121.00	
Distribution System	1977	SL-50	277,000.55			277,000.55	141,733.00	55,394.75
Tank	1980	SL-50	16,000.00			16,000.00	7,067.00	
Apartment Hook Up	1981	SL-35	3,277.82			3,277.82	1,979.00	
Water Loading Building	Sep-82	SL-35	1,420.00			1,420.00	814.00	
8" Water Meter	Aug-86	SL-35	978.15			978.15	447.00	
New Line - Druther's	Sep-86	SL-35	2,588.00			2,588.00	1,172.00	
Flowmeter for hydrant	Oct-86	SL-35	480.83			480.83	220.00	
Ford Street Line	Jan-87	SL-35	7,331.26			7,331.26	3,240.00	
Kelly Court Line	Jun-88	SL-35	7,000.00			7,000.00	3,000.00	
Road Bore & Forsee's	Jun-88	SL-35	5,662.95			5,662.95	2,413.00	
(1) 6" meter/(6) 3/4" meters	Jul-88	SL-40	2,096.80			2,096.80	742.00	
Waterline for Horizon Homes	Jan-89	SL-50	6,854.00			6,854.00	1,850.00	
Hwy 22/Gratz Road Waterline	Feb-89	SL-50	1,380.79			1,380.79	376.00	
Horizon Homes material for line	Mar-89	SL-50	2,261.42			2,261.42	600.00	
Fire Hydrant - Horizon Homes	Mar-89	SL-40	801.62			801.62	267.00	
Fire Hydrant - Horizon Homes	Mar-90	SL-40	978.00			978.00	300.00	
Pipe - 2" meter	Apr-90	SL-35	2,253.24			2,253.24	800.00	
Old Lines Replaced	Jun-90	SL-35	10,161.50			10,161.50	3,625.00	
Hwy 127 Waterline	Jun-90	SL-50	82,087.00			82,087.00	18,881.31	75,671.50
Water main & Plant Improvements	Jun-90	SL-50	178,882.61			178,882.61	44,725.00	
400,000 Gallon Tank	Jun-90	SL-30	576,526.56			576,526.56	239,811.60	577,166.56
Capitalize Repairs to 100.000 Gallon Tank	Jun-90	SL-30	93,718.80			93,718.80	39,049.70	
2 Hydrants	Jun-91	SL-40	1,743.32			1,743.32	503.27	
Services	Various	SL-50	19,005.00			19,005.00	5,691.00	
Meters	Various	SL-50	17,384.75			17,384.75	5,213.00	
Meter Installations	Various	SL-50	19,005.00			19,005.00	5,691.00	
New Water Treatment Plant	Jun-96	SL-50	2,272,841.02			2,272,841.02	295,470.00	1,064,254.37
Pipe Upgrade - Cedar Hill Road	2-Mar	SL-50		6,447.00		6,447.00	43.00	
						-	-	
						-	-	
						-	-	
						-	-	
Subtotal - Distribution System			3,963,072.31	6,447.00	-	3,969,519.31	1,095,283.20	1,772,487.18

Equipment						-		
Equipment	1977	SL-10	2,227.30			2,227.30	2,227.30	
Temporary line	1977	SL-10	14,000.00			14,000.00	14,000.00	
Snow Plow	1979	SL-10	1,617.00			1,617.00	1,617.00	
Boat	Jul-83	SL-5	100.00			100.00	100.00	
Alum Feeder Tank	Jun-85	SL-5	2,887.91			2,887.91	2,887.91	
Ditch Witch	Jun-86	SL-7	450.00			450.00	450.00	
Chlorinator Equipment	Oct-86	SL-10	3,370.00			3,370.00	3,370.00	
Two Cylinder Scale	Nov-86	SL-10	755.00			755.00	755.00	
Push Rod Machine	Apr-87	SL-10	4,500.00			4,500.00	4,500.00	
Jar Test Equipment	Oct-86	SL-5	778.02			778.02	778.02	
Communication Equipment	Jan-89	SL-10	1,396.00			1,396.00	1,396.00	
PH Meter & Line Converter	Jun-89	SL-15	424.29			424.29	366.00	
Eccentric Slide Block	Jun-89	SL-15	188.42			188.42	170.00	
Porta Pump & Tow Chain	Jun-89	SL-20	608.89			608.89	333.00	
Hi Tork Mixer	Jun-89	SL-10	1,582.00			1,582.00	1,582.00	
1/2 Intercom	Oct-89	SL-10	30.45			30.45	30.45	
Telephone system (partial)	Jan-90	SL-10	272.84			272.84	272.84	
Jackhammer	Feb-90	SL-10	5,499.90			5,499.90	5,499.90	
Copy Machine	May-90	SL-10	421.25			421.25	421.25	
Coin Operated Machine	Mar-90	SL-10	989.00			989.00	989.00	
Valve - River gate	Apr-90	SL-40	3,150.00			3,150.00	987.00	
Fencing	Jun-90	SL-20	6,025.00			6,025.00	3,763.00	
Ten Foot Jon Boat	Jun-91	SL-10	85.00			85.00	85.00	
1/2 Mower	Jun-91	SL-10	561.87			561.87	561.87	
Roto Tiller	Jun-93	SL-10	579.95			579.95	468.82	
Lawnmower	Dec-94	SL-10	1,716.96			1,716.96	1,290.00	
Computer	Dec-94	SL-5	350.00			350.00	350.00	
P/U Truck Chevy (1/2)	Jun-96	SL-5	18,916.57			18,916.57	18,916.57	
Snow Plow & Utility bed for truck	Jul-90	SL-5	7,245.00			7,245.00	7,245.00	
Computer Upgrade	Oct-97	SL-3	4,686.00			4,686.00	4,686.00	
1989 Dodge Truck	Aug-99	SL-5	6,000.00			6,000.00	3,500.00	
1999 Deere 310E Backhoe	Sep-99	SL-10	28,034.41			28,034.41	7,942.00	
12' Truck Bed	Apr-00	SL-10	6,722.00			6,722.00	1,512.00	
Scag Power mower	Jun-01	SL-5	4,000.00			4,000.00	866.67	
Scag Power mower accessories	Jun-01	SL-5	299.00			299.00	64.98	
2002 Chevy Pickup	Jan-02	SL-5		26,390.25		26,390.25	2,639.00	
						-	-	
Subtotal - Equipment			130,470.03	26,390.25	-	156,860.28	96,623.58	
						-		
Grand Total Waterworks			4,209,108.76	54,332.25	-	4,263,441.01	1,215,160.38	1,772,487.18
						equals 6/30/02 audit	equals 6/30/02 audit	equals 6/30/02 audit

Owenton Sewer								
Audit Report								
Year ended: June 30, 2002								
Kind of property	Date	Method Life Rate	Beginning Balance	Additions	Retirements	Ending Balance	Accum. Depr.	CIAC
Land								
Land & Rights of Way	1938	n/a	2,250.00			2,250.00	-	
Subtotal - Land & Rights of Way			2,250.00	-	-	2,250.00	-	
Buildings & Improvements								
Restroom improvements	Apr-87	SL-10	287.00			287.00	287.00	
						-		
						-		
						-		
						-		
Subtotal - Buildings & Improvements			287.00	-	-	287.00	287.00	
Furniture & Fixtures								
1/2 Posting Machine	1978	SL-10	4,220.91			4,220.91	4,220.91	
1/2 IBM Typewriter	2-12-85	SL-5	318.00			318.00	318.00	
Office Chair	1-23-86	SL-7	139.00			139.00	139.00	
Fire Proof Safe	Nov-89	SL-10	300.00			300.00	300.00	
Phone System - partial	Jun-90	SL-10	984.24			984.24	984.24	
						-	-	
						-	-	
						-	-	
						-	-	
Subtotal - Furniture & Fixtures			5,962.15	-	-	5,962.15	5,962.15	

Equipment						-		
Equipment	1938	SL-10	3,335.66			3,335.66	3,335.66	
Equipment	1964	SL-10	3,335.67			3,335.67	3,335.67	
Equipment	1977	SL-10	1,050.00			1,050.00	1,050.00	
78 Chev Truck	Aug-83	SL-3	3,500.00			3,500.00	3,500.00	
Radio (1/3 interest)	Aug-83	SL-3	100.00			100.00	100.00	
Sewer Cleaning Machine	Apr-84	SL-5	974.85			974.85	974.85	
Chlorinator Machine	Feb-86	SL-7	1,350.00			1,350.00	1,350.00	
Smoke Blower	Apr-87	SL-10	602.10			602.10	602.10	
Monitoring Kit	Jun-87	SL-10	884.64			884.64	884.64	
Communication System	Jan-89	SL-10	1,396.00			1,396.00	1,396.00	
Sludge Truck	Aug-88	SL-10	27,691.00			27,691.00	27,691.00	
91 S10 Chevey P/U	Jul-91	SL-5	3,953.16			3,953.16	3,953.16	
V-500 Chlorinator	Aug-89	SL-10	1,222.38			1,222.38	1,222.38	
12' Boat & 4 hp motor	Sep-89	SL-10	200.00			200.00	200.00	
Air Tanks	Dec-89	SL-10	1,522.00			1,522.00	1,522.00	
Equipment	Jan-90	SL-10	173.61			173.61	173.61	
Copy Machine	May-90	SL-10	421.25			421.25	421.25	
Computer System	Jun-90	SL-10	3,500.00			3,500.00	3,500.00	
Computer System	Jun-90	SL-10	2,737.50			2,737.50	2,737.50	
Mower (1/2 interest)	Jun-91	SL-10	500.00			500.00	500.00	
Sewer Cleaning Machine	Apr-93	SL-10	20,009.00			20,009.00	19,009.00	
Aerator	Jun-96	SL-10	8,200.00			8,200.00	4,988.00	
2 Myer Pumps & Installation	Nov-97	SL-10	4,842.84			4,842.84	2,218.00	
99 Deere 310E Backhoe (1/2)	Sep-99	SL-10	9,792.59			9,792.59	2,692.00	
Aerators	Apr-00	SL-10	11,962.00			11,962.00	2,691.00	
						-	-	
						-	-	
						-	-	
						-	-	
Subtotal - Equipment			113,256.25	-	-	113,256.25	90,047.82	

Distribution System						-		
Distribution System	1938	SL-50	101,899.32			101,899.32	101,899.32	106,338.26
Distribution System	1964	SL-50	146,664.34			146,664.34	113,171.00	
Sewer Lines	Apr-89	SL-50	3,748.55			3,748.55	994.00	
Horizon Home Lines	Jan-89	SL-50	5,635.00			5,635.00	1,525.00	
Wastewater Plant Improvements	Dec-89	SL-50	2,110,399.46			2,110,399.46	526,980.00	1,168,806.00
Pump Station Replacements	Jun-89	SL-50	267,212.77			267,212.77	69,472.00	
Sewer Rehab and television service	Dec-89	SL-20	46,935.29			46,935.29	28,342.00	
Meters, services & installations	Jun-90	SL-50	2,000.00			2,000.00	500.00	
Meters, services & installations	var 6/89	SL-50	4,700.00			4,700.00	1,729.00	
Meters, services & installations	Jun-91	SL-50	2,850.00			2,850.00	656.00	
Sewer Rehab	Dec-91	SL-20	4,561.51			4,561.51	2,394.00	
Sewer Rehab	Dec-92	SL-20	6,913.79			6,913.79	3,287.00	
Lift Station	Mar-99	SL-50	15,450.00			15,450.00	1,004.00	
Madison Street Force Main	Jan-00	SL-50	67,145.00			67,145.00	3,357.00	
Madison Street Force Main	Dec-00	SL-50	9,851.78			9,851.78	296.00	
						-	-	
						-	-	
						-	-	
						-	-	
Subtotal - Distribution System			2,795,966.81	-	-	2,795,966.81	855,606.32	1,275,144.26
Grand Total Sewer			2,917,722.21	-	-	2,917,722.21	951,903.29	1,275,144.26
						equals 6/30/02 audit	equals 6/30/02 audit	equals 6/30/02 audit

Exhibit 2
Real Estate

Exhibit 2		
Real Estate - Owenton Water and Sewer		
Owenton Waterworks		
Audit Report		
Year ended: June 30, 2002		
In Progress		
Owenton Sewer		
Audit Report		
Year ended: June 30, 2002		
In Progress		

Exhibit 3
Legal Proceedings

In Progress

Exhibit 4
Contracts

In Progress

Exhibit 5
Employees

Last name	First name	SS#	Date of hire	Title	Water licenses	WW licenses	DOB
WATER							
Glore	Athelene		1/25/1971	Office Manager			
Gibson	Marshall		7/24/1985	Superintendent	II-D 5121 III-A 05354 ALT 532	II-05029	
Clifton	David		5/9/1975	WTP Operator	III-D 01489 III-A 01488	II-01916	
Dempsey	Steve		6/29/1999	Maintenance backhoe	II-D 3707		
O'Banion	Bobby		4/18/1979	WTP Operator	II-D 02682 III-A 03077	II-03030	
Callan	Anthony		4/4/1994	WWTP/WTP Operator	II-D 00173 III-A 00611	II-00758	
Kincaid	Terry		6/26/1980	Maintenance backhoe	II-D 05652 ALT 532 III-A 06146		
SEWER							
Young	Ashley		7/28/1997	Maintenance			
Howard	Robert		9/24/1985	WWTP Operator	II-D 5524	II-05743	
Osborne	LeeAnn		4/1/1999	Billing Clerk			

Exhibit 6
Employee Benefits

Kentucky-American Water Company
offers many benefits to its full-time associates. . . .

Holidays

Associates of the Company receive eleven paid holidays each year. The eleven holidays are:

New Year's Day	Thanksgiving Day
Good Friday	Friday after Thanksgiving
Memorial Day	Christmas Eve
Fourth of July	Christmas Day
Labor Day	Personal Floating Days* (2)

Vacation

Completed Years of Continuous Service	Vacation	Completed Years of Continuous Service	Vacation
1 Year	10 Days	15 & 16 Years	20 Days
2 Years	11 Days	17 & 18 Years	21 Days
3 Years	12 Days	19 & 20 Years	22 Days
4 Years	13 Days	21 & 22 Years	23 Days
5 & 6 Years	15 Days	23 & 24 Years	24 Days
7 & 8 Years	16 Days	25 Years Plus	25 Days
9& 10 Years	17 Days		
11 & 12 Years	18 Days		
13 & 14 Years	19 Days		

Death in the Family

When death occurs in the immediate family of an associate and in a locality where it is reasonably possible for the associate to attend the funeral, the Company shall grant said associate up to three (3) consecutive scheduled working days at straight time for the purpose of making necessary arrangements and attending the funeral. The associate shall report to work no later than the second scheduled workday following the funeral. The Company should be advised when the associate plans to return to work. Within the meaning of this section, immediate family includes husband and wife, children, mother or father, brother, sister and immediate mother-in-law or father-in-law, stepfather or stepmother only. The Company shall grant two (2) scheduled work days with pay at straight time for the purpose of attending the funeral of a grandchild, grandmother and grandfather and one (1) scheduled work day with pay (providing the funeral occurs on a scheduled work day) at straight time for the purpose of attending the funeral of an immediate brother-in-law, sister-in-law, grandmother and grandfather of spouse.

Sick Leave

The Company provides a sick leave program wherein each associate who has completed six months of continuous service will be eligible for compensation after the first day of illness. An associate who is unable to perform his regular duties as a consequence of illness or accident shall be paid as follows during such disability:

Effective July 1, 2001, new associates will have two weeks of annual sick leave in which the associate will receive 100% of his/her base pay. After the two weeks of sick leave has been exhausted, the associate will receive 75% of his/her base pay under the short-term disability benefit. If the associate needs to be off, for more than 26 weeks, the associate will start to receive long-term disability benefits @ 60% of his/her base pay for as long as the associate remains disabled.

The Company has the option to select a medical doctor to examine the associate stating that the associate was ill and unable to perform his regular duties during such absence. Only a doctor's form provided by the Company will be accepted.

Leave of Absence for Sickness or Accident Disability

Associates will be granted leaves of absence for sickness or accident disability for the maximum periods as follows:

LENGTH OF SERVICE	MAXIMUM PERIOD OF LEAVE OF ABSENCE
UP TO SIX MONTHS	TWO WEEKS
SIX MONTHS BUT LESS THAN TWO YEARS	TWENTY-SIX WEEKS
TWO YEARS BUT LESS THAN FIVE YEARS	ONE YEAR
OVER FIVE YEARS	TWO YEARS

Continuity of Income to a Disabled Associate

Because the Company realizes that delay sometimes occurs in the determination of benefits payable under the Worker's Compensation Law, the Company will pay a disabled associate's normal weekly wages in full for the period indicated under Sick Leave. All the associate need do is to agree that any benefits currently or subsequently received from the Worker's Compensation carrier (other than reimbursement of expenses) with respect to said period of disability, shall be assigned to the Company. The payments assigned from the compensation carrier to the Company include only weekly benefits for temporary disability.

Group Insurance

All full-time associates can participate in the insurance plan, beginning on the first day of the month following 30 days of continuous service.

THE BLUECARD PPO PROGRAM is a national program that links participating doctors and hospitals to Blue Cross and/or Blue Shield Plans throughout the United States. Your only responsibility is for any applicable co-payments or coinsurance and any non-covered expenses. When a participating PPO physician or health care practitioner is used, he/she will file a claim of your behalf. If a nonparticipating provider is used, you are responsible for paying for care up front at the time of service. You then submit the bill along with a completed claim form, for reimbursement.

Information on the Plan is provided in the Summary Plan Description book.

THE PPO DENTAL PROGRAM will be administered by Aetna.

Information on the Plan is provided in the Summary Plan Description book.

Pension Plan (Retirement)

Realizing the necessity of providing now, during your productive years, for the time when you will reach retirement, the Company has established and maintains a liberal pension plan. This plan covers both early and normal retirement, as well as disability retirement. After five years of continuous service, you have vested rights and will receive retirement benefits even if you leave the Company. For full information, consult "Your Pension Plan" booklet. Copies of this booklet may be borrowed from the Director Human Resources. You may also consult your supervisor concerning pension benefits.

Savings Bonds

The Company encourages associates to participate in the U.S. Savings Bonds payroll deduction plan. Depending upon how much you decide to have deducted from each paycheck, you may receive any number of savings bonds per year. Consult the Accounting Supervisor or your immediate Supervisor for details.

401(k) Savings Plan

The Company allows all associates to contribute to the 401(k) Savings Plan on a Pre-Tax Basis. The Company will contribute 50 percent (50%) of the first five percent (5%) contributed starting July 1, 2001. Please refer to the Summary Plan Description Booklet for full details of the Plan.

Credit Union

The Company is a member of the Members Heritage Federal Credit Union. Information on all benefits provided by the Credit Union is included in the associate manual.

Central Kentucky Blood Center Program

Kentucky-American Water Company participates in the Central Kentucky Blood Center drives twice per year. A mobile unit will be stationed at our office complex and associates desirous of donating can schedule a convenient time to give blood during working hours.

Educational Assistance Plan

An educational assistance program was initiated in 1984 (revised in 1991) to assist associates who wish to continue their education on a voluntary basis, during off-duty hours. All associates will be eligible immediately with no waiting period required. If you have any questions, see your supervisor.

Fishing Privileges

Kentucky-American Water Company associates and their immediate families are provided free fishing privileges at No. 4 Reservoir. You are required to abide by the rules and regulations set forth by the Lake Ellerslie Fishing Club. A Kentucky State Fishing License is required for anyone 16 years or older. See attached memo.

KENTUCKY-AMERICAN WATER COMPANY
CASE NO. 2012-00096
COMMISSION STAFF'S FIRST REQUEST FOR INFORMATION

Witness: Lance Williams

3. Provide all correspondence, memoranda, electronic mail messages and any other documents since January 1, 2000 in which Kentucky-American or its agents discuss the condition of the Owenton Water Treatment Plant and possible repairs to that plant.

Response:

Please see attached. As with all of its discovery responses, KAW has endeavored to identify and produce all documents within its care, custody and control that are responsive to this request which covers a period of over twelve years. To the extent that process identifies further responsive documents, KAW, will, of course, supplement this response. A portion of the response has been redacted and has been provided under seal and is the subject of a petition for confidential protection.

Re: Owenton Intake pump
Thomas W Williams to: Dillard Griffin 09/22/2005 03:37 PM
Cc: Linda Bridwell, mmullins, Richard C Svindland, Rick Buchanan

Follow Up: Normal Priority.

I watched Reynolds pull the pump. The intake has a length of thick nylon rope jammed in it.

IM001977.JPG

IM001978.JPG

Thomas W. Williams, PE
Senior Operations Engineer
Kentucky American Water Co.
2300 Richmond Rd.
Lexington, KY 40502
Direct: 859-268-6352
Fax: 859-268-6374
Dillard Griffin

Dillard Griffin
09/21/2005 04:25 PM

To: Thomas W Williams/KAWC/AWWSC@AWW, Mark Mullins
cc: Linda Bridwell/KAWC/AWWSC@AWW, Richard C Svindland/KAWC/AWWSC@AWW, Rick Buchanan
Subject: Re: Owenton Intake pump

Thanks Tom. I rather think that you are correct in that funding and timing would not allow us much opportunity to do anything now. However, it is important that we have the two intake pumps for Owenton. To get us through the winter and possibly next summer. Mark is going to go ahead and have the contractor, Reynolds pull the existing pump and motor. starting maybe tomorrow. We will be looking at a motor replacement and possibly next impeller for the pump. We will be capitalizing the whole project just need to get a firm cost estimate together. mark will be getting with you for you input and assistance.,

Dillard Griffin
Operations Superintendent
Kentucky American Water
2300 Richmond Road
Lexington, KY 40502
859 268 6340 (office)
859 537 0739 (mobile)
859 268 6395 (fax)
Thomas W Williams

Thomas W Williams
09/21/2005 04:07 PM

To: Richard C Svindland/KAWC/AWWSC@AWW
cc: Dillard Griffin/KAWC/AWWSC@AWW, Linda Bridwell/KAWC/AWWSC@AWW, Rick Buchanan
Subject: Re: Owenton Intake pump

I am invited to a meeting tomorrow to review the latest plan with MSE. The project is suppose to be close to bid, but not there yet. Pump replacement could be done early in the project, but the new line will have to be done too. So, we are still looking at months of delay. The complications of funding probably prevent Owenton from paying for partial solutions. We probably need to identify the lowest cost solution that works

until the pumps are replaced. How important are the existing pumps in the current scenario with respect to the auxiliary pump and declining (hopefully) fall/winter demand?

I'll be glad to help.

Thomas W. Williams, PE
Senior Operations Engineer
Kentucky American Water Co.
2300 Richmond Rd.
Lexington, KY 40502
Direct: 859-268-6352
Fax: 859-268-6374
Richard C Svindland

Richard C Svindland
09/21/2005 09:08 AM

To: Dillard Griffin/KAWC/AWWSC@AWW, Thomas W Williams/KAWC/AWWSC@AWW
cc: Linda Bridwell/KAWC/AWWSC@AWW, Rick Buchanan
Subject: Re: Owenton Intake pump

Dillard,

Please keep Tom Williams in the loop on this, he has been working on the intake project and will recall the current state of design. For know and subject to check from Tom, I recall that we were to replace existing intake pumps with two larger units, so I would not think we would want to purchase new motor unless that motor could be used somewhere else, either HS pumps of Lexington?? But let Tom know and he can assist.

Richard C. Svindland, P.E.
Technical Services Manager SE Region
American Water

800 W. Hershey Park Dr.
Hershey, PA 17033

717 531 3231 - PA Office
717 531 3282 - PA Fax

Dillard Griffin

Dillard Griffin
09/20/2005 04:33 PM

To: Rick Buchanan, Linda Bridwell/KAWC/AWWSC@AWW, Richard C Svindland/KAWC/AWWSC@AWW
cc: Nick Rowe
Subject: Owenton Intake pump

Of course you would know that it would happen. Two days after we buy Owenton one of the two intake pump motors burns up. It also appears that there is a problem with the pump, we will have to pull the pump to know for sure. In either fashion the existing motor will need to be rebuilt or replaced and the repairs to the pump will not be known until we have the pump pulled from the well.

Here are some options and thoughts.

- If we rebuild the current out of service motor pull and reinstall the existing pump, if no further damages to the pump then the total maintenance cost will be around $15,K to $17K
- To replace the existing motor with a new motor would be about $2,000 greater than the repair cost. We may be better to do the new motor and then capitalize the total project $17K to $20K
- Additional thought and option, with the new intake I think I remember that the existing intake pumps

would be replaced. If this is correct can we replace the existing pump and somehow work it out from the new intake project. This is of course Owenton intake project and they not be open to this. Rich do you recall from your dealings with them what the new intake line transfer pumps are to be.

Linda we never were able to get together to discuss the proposed capital spending for Owenton, do you have a thought on item 2 above?

Dillard Griffin
Operations Superintendent
Kentucky American Water
2300 Richmond Road
Lexington, KY 40502
859 268 6340 (office)
859 537 0739 (mobile)
859 268 6395 (fax)

Re: Owenton Acq.
Richard C Svindland to: David R Kaufman 11/14/2005 02:29 PM
Cc: Linda Bridwell
This message is digitally signed.

Follow Up: **Normal Priority.**

It is attached below.

Owenton - Capex Plans.xls

Richard C. Svindland, P.E.
Technical Services Manager SE Region
American Water

800 W. Hershey Park Dr.
Hershey, PA 17033

717 531 3231 - PA Office
717 531 3282 - PA Fax

David R Kaufman

David R Kaufman
11/14/2005 10:48 AM

To: Richard C Svindland/KAWC/AWWSC@AWW, Linda Bridwell/KAWC/AWWSC@AWW
cc:
Subject: Owenton Acq.

Rich, Please furnish the detailed multi-year cap-ex plan propsed for the above. Lets discuss with Linda this week on delivery. DRK

David Kaufman
Director of Engineering
Southeast Region
American Water
800 W. Hershey Park Drive
Hershey, Pennsylvania 17033
Phone: (717) 531-3303
Fax: (717) 531-3282
dkaufman@pawc.com

Item No.	Item Description	Year 1	Year 2	Year 3	Year 4	Year 5	Total
1	New Ky River Intake (KAW Portion)	$ 150,000	$ 150,000				$ 300,000
2	Upgrade WTP		$ 50,000	$ 200,000	$ 250,000		$ 500,000
3	Upgrade / Replace Raw Water Main	$ 400,000	$ 400,000				$ 800,000
	Squiresville Road Water Main, 7 miles		$ 280,000				$ 280,000
4	Southfork Road Water Main Extension		$ 120,000				$ 120,000
5	SCADA Installation			$ 300,000			$ 300,000
6	Security Upgrades				$ 100,000		$ 100,000
7	Storage Tank Rehab				$ 200,000		$ 200,000
8	Backup Generator	$ 100,000					$ 100,000
9	Chemical Feed Improvements	$ 300,000					$ 300,000
10	Misc. System Investment			$ 60,000	$ 60,000	$ 80,000	$ 200,000
		$ 950,000	$ 1,000,000	$ 560,000	$ 610,000	$ 80,000	$ 3,200,000

Item No.	Item Description	Year 1	Year 2	Year 3	Year 4	Year 5	Total
1	New Ky River Intake (KAW Portion)	$ 150,000	$ 150,000				$ 300,000
2	Upgrade WTP		$ 50,000	$ 200,000	$ 250,000		$ 500,000
3	Upgrade / Replace Raw Water Main	$ 100,000	$ 100,000				$ 200,000
4	Southfork Road Water Main Extension		$ 120,000				$ 120,000
5	SCADA Installation			$ 100,000			$ 100,000
6	Security Upgrades				$ 20,000		$ 20,000
7	Storage Tank Rehab				$ 200,000		$ 200,000
8	Backup Generator	$ 100,000					$ 100,000
9	Chemical Feed Improvements	$ 300,000					$ 300,000
10	Misc. System Investment			$ 60,000	$ 60,000	$ 80,000	$ 200,000
		$ 650,000	$ 420,000	$ 360,000	$ 530,000	$ 80,000	$ 2,040,000

Owenton, Kentucky
5 year CAPEX Plan as Approved by CDC
Revised 8-31-05

Item No.	Item Description	Year 1	Year 2	Year 3	Year 4	Year 5	Total	Comment
1	New Ky River Intake (KAW Portion)	$ -	$ -				$ -	Owenton has loan for this amount
2	Upgrade WTP		$ 50,000	$ 200,000	$ 250,000		$ 500,000	
3	Upgrade / Replace Raw Water Main	$ 100,000	$ 100,000				$ 200,000	Cost included in Intake Project
	Squiresville Road Water Main, 7 miles						$ -	to be done by Carrollton
4	Southfork Road Water Main Extension		$ 120,000				$ 120,000	
5	SCADA Installation			$ 100,000			$ 100,000	
6	Security Upgrades				$ 20,000		$ 20,000	
7	Storage Tank Rehab				$ -		$ -	Done under maintenance
8	Backup Generator	$ -					$ -	Optional
9	Chemical Feed Improvements	$ 300,000					$ 300,000	
10	Misc. System Investment	$ 60,000		$ 60,000	$ 60,000	$ 80,000	$ 260,000	
		$ 460,000	$ 270,000	$ 360,000	$ 330,000	$ 80,000	$ 1,500,000	
	Dan's Bickertons Spread (Water)	$ 228,460	$ 249,388	$ 824,836	$ 99,500	$ 79,500	$ 1,481,684	
	Dan's Bickertons Spread (wastewater)	$ 26,250	$ 26,250	$ 26,250	$ 26,250	$ 26,250	$ 131,250	
		$ 254,710	$ 275,638	$ 851,086	$ 125,750	$ 105,750	$ 1,612,934	

Item No.	Item Description	Year 1	Year 2	Year 3	Year 4	Year 5	Total	Comment
2	Upgrade WTP			$ 650,000			$ 650,000	
3	Upgrade / Replace Raw Water Main						$ -	
4	Southfork Road Water Main Extension		$ 75,000	$ 45,000			$ 120,000	
5	SCADA Installation			$ 50,000			$ 50,000	
6	Security Upgrades				$ 30,000		$ 30,000	
9	Chemical Feed Improvements	$ 180,000	$ 175,000				$ 355,000	
10	Misc. System Investment (Water)	$ 50,000		$ 80,000	$ 69,500	$ 80,000	$ 279,500	
10a	Misc. System Investment (wastewater)	$ 26,250	$ 26,250	$ 26,250	$ 26,250	$ 26,250	$ 131,250	
		$ 256,250	$ 276,250	$ 851,250	$ 125,750	$ 106,250	$ 1,615,750	

Intake
Thomas W Williams to: rcsvin, Linda Bridwell 11/16/2005 08:59 AM

Follow Up: Normal Priority.

Again, from the told-you-so column, the bids on the Intake were quite high:

[redacted]

Scott will review bids and distribute a bid summary. Opinion is that Owenton will have to ask for more KIA loan. They will begin feeling that out. I am assuming that KIA money is cheaper than KAWC's money source. So, I would think that KAWC wouldn't step in unless KIA money isn't available.

Owenton Intake Bids.pdf

Thomas W. Williams, PE
Senior Operations Engineer
Kentucky American Water Co.
2300 Richmond Rd.
Lexington, KY 40502
Direct: 859-268-6352
Fax: 859-268-6374

City of Owenton
Contract 4
Bid Date: November 15, 2005 @ 2 pm

Bid Results

Contractor	Total Base Bid
[redacted] Alternate	[redacted]

Owenton Intake

Thomas W Williams to: Dillard Griffin, Nick Rowe, Linda Bridwell 01/13/2006 10:23 AM

Cc: rcsvin, Rick Buchanan, dbickert

Follow Up: Normal Priority.

Owenton opened the competitive negotiations yesterday on the intake project. All three original bidders came back with proposals and prices. In summary, the price went up. I have attached the summary of prices and the engineer's estimate of costs. Owenton immediately began to pursue additional money from the legislature via their elected officials. There is a $1.3 million difference between the engineer's estimate and the money they currently have committed. Owenton can build a portion of the project, if DOW agrees, to relieve at least some of the summer raw water shortage. That option is being pursued. The negotiated prices are split in such a way that Owenton can award only the main and existing intake improvements.

Owenton may turn to KAWC for more cost sharing if other funding sources aren't forthcoming.

Owenton Intake Est. 1-12-06.pdf

Thomas W. Williams, PE
Senior Operations Engineer
Kentucky American Water Co.
2300 Richmond Rd.
Lexington, KY 40502
Direct: 859-268-6352
Fax: 859-268-6374

City of Owenton - Bid Tabulation
Contract 4: Kentucky River Supply Project

[redacted]

[redacted]

Competitive Negotiation Bid Tabulation

January 12, 2006 - 2:00 PM

Re: Owenton Intake
Richard C Svindland to: Nick Rowe 01/13/2006 01:38 PM
Cc: dbickert, Dillard Griffin, Linda Bridwell, Rick Buchanan, Thomas W Williams
This message is digitally signed.

Follow Up: **Normal Priority.**

Nick & Tom,

Dave and I would like to discuss this issue next week when we are in Lexington to come up with the best action plan for KAW. Could we have copies available for 1) the agreement between Owenton and KAW as it relates to the intake 2) the asset purchase agreement between Owenton & KAW to help define what we actually purchased and what they may still own 3) a set of the intake drawings 4) the results of the bidding and negations process and finally 5) an estimate of what it would cost if KAW did the entire project as stand alone. (i.e, include AFUDC, inspections, engineering, construction, etc.).

Thanks.

Richard C. Svindland, P.E.
Technical Services Manager SE Region
American Water

800 W. Hershey Park Dr.
Hershey, PA 17033

717 531 3231 - PA Office
717 531 3282 - PA Fax

Nick Rowe

Nick Rowe
01/13/2006 11:16 AM

To: Thomas W Williams/KAWC/AWWSC@AWW
cc: dbickert@amwater.com, Dillard Griffin/KAWC/AWWSC@AWW, Linda Bridwell/KAWC/AWWSC@AWW, rcsvin@kawc.com, Rick Buchanan
Subject: Re: Owenton Intake

Tom - as we discussed last night, please continue to push for an interim solution that might get us by this summer. Also, I have already asked that you, Rick, and Linda come-up with a contingency plan for this summer. You might want to pick Rich Svinland's brain on that issue.

Linda- I expect your Dept. to drive the intake solution issue.

****

Nick O. Rowe
Regional Vice President
Service Delivery - Operations
American Water
800 West Hershey Park Drive
Hershey, PA 17033
T: 717 531 3370 (PA)

859 268 6333 (KY)
F: 717 531 3314 (PA)
859 268 6327 (KY)
M: 859 339 5878
E: nrowe@amwater.com

Thomas W Williams

01/13/2006 10:23 AM

To: Dillard Griffin/KAWC/AWWSC@AWW, Nick Rowe/KAWC/AWWSC@AWW, Linda Bridwell

cc: rcsvin@kawc.com, Rick Buchanan, dbickert@amwater.com

Subject: Owenton Intake

Owenton opened the competitive negotiations yesterday on the intake project. All three original bidders came back with proposals and prices. In summary, the price went up. I have attached the summary of prices and the engineer's estimate of costs. Owenton immediately began to pursue additional money from the legislature via their elected officials. There is a $1.3 million difference between the engineer's estimate and the money they currently have committed. Owenton can build a portion of the project, if DOW agrees, to relieve at least some of the summer raw water shortage. That option is being pursued. The negotiated prices are split in such a way that Owenton can award only the main and existing intake improvements.

Owenton may turn to KAWC for more cost sharing if other funding sources aren't forthcoming.

Thomas W. Williams, PE
Senior Operations Engineer
Kentucky American Water Co.
2300 Richmond Rd.
Lexington, KY 40502
Direct: 859-268-6352

Fax: 859-268-6374

Owenton Intake Est. 1-12-06.pdf

[redacted]

City of Owenton - Bid Tabulation
Contract 4: Kentucky River Supply Project

[redacted]

Competitive Negotiation Bid Tabulation

January 12, 2006 - 2:00 PM

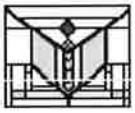

Owenton Update Feb 21

Thomas W Williams to: Linda Bridwell, rcsvin, Nick Rowe, Dillard Griffin, Rick Buchanan, David Shehee, dbickert

02/23/2006 08:26 AM

Follow Up: Normal Priority.

Owenton city officials and others including myself met with the DOW Tuesday, Feb. 21 to discuss funding and approval of the intake project. DOW has offered (subject to cabinet approval) to help Owenton in discussions with legislators to find additional funding for the project. Owenton is attempting to get a budget line item to fund at least a portion of the project shortfall ($1.3 million). Rural Development has indicated that they can provide a $900K loan coupled with a $400K grant, but a loan of that size doesn't help much since they have no way to pay it back. Donna Marlin, DOW, says that they have never joined a municipality in funding discussions with elected officials, but the grave situation in Owenton warrants their involvement. Owenton has continued to ask for approval to build the Severn Creek portion of the project, but DOW won't entertain that question until the other means of funding have been exhausted. Owenton is attempting to get some kind of answer before bids expire March 14.

Thomas W. Williams, PE
Senior Operations Engineer
Kentucky American Water Co.
2300 Richmond Rd.
Lexington, KY 40502
Direct: 859-268-6352
Fax: 859-268-6374

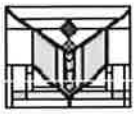

Owenton Intake Update

Thomas W Williams to: rcsvin, Linda Bridwell, Rick Buchanan, Dillard Griffin, David Shehee, Nick Rowe 03/28/2006 08:55 AM

Follow Up: Normal Priority.

Owenton has approval to proceed with the Severn Creek portion of the project. They are taking the final steps to award the contract. No word on the fate of the line-item money in the state budget for them.

Thomas W. Williams, PE
Senior Operations Engineer
Kentucky American Water Co.
2300 Richmond Rd.
Lexington, KY 40502
Direct: 859-268-6352
Fax: 859-268-6374

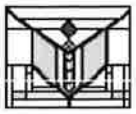

Owenton Intake

Thomas W Williams to: Nick Rowe, rcsvin, Linda Bridwell, Dillard Griffin, David Shehee, dbickert 04/05/2006 05:34 PM

Cc: Rick Buchanan

Follow Up: Normal Priority.

Owenton held a meeting today with DOW and others to finalize their project. Rick and I attended. The mayor signed the contracts and the notice-to-proceed will be issued today. This will be for phase I which improves the Severn Creek intake pumps and the raw water line to the plant. I suggest that KAWC coordinate with Owenton as they proceed to acquire funding for the KY River intake (phase II). KAWC's plans for a regional plant in Owen County may reduce the need for a new intake.

Thomas W. Williams, PE
Senior Operations Engineer
Kentucky American Water Co.
2300 Richmond Rd.
Lexington, KY 40502
Direct: 859-268-6352
Fax: 859-268-6374

Re: Owenton Intake
Thomas W Williams to: Nick Rowe 04/06/2006 04:17 PM
Cc: David Shehee, dbickert, Dillard Griffin, Linda Bridwell, Nick Rowe, Peggy Slone, rcsvin, Rick Buchanan

Follow Up: Normal Priority.

Although they have a 270 day contract, the actual work will happen sooner. The longest part of the process may be the lead time on ordering the equipment. Owenton will definitely need to have an alternate plan for water this summer.

Thomas W. Williams, PE
Senior Operations Engineer
Kentucky American Water Co.
2300 Richmond Rd.
Lexington, KY 40502
Direct: 859-268-6352
Fax: 859-268-6374
Nick Rowe

Nick Rowe
Sent by: Peggy Slone

04/06/2006 02:17 PM

To: Thomas W Williams/KAWC/AWWSC@AWW
cc: David Shehee/KAWC/AWWSC@AWW, dbickert@amwater.com, Dillard Griffin/KAWC/AWWSC@AWW, Linda Bridwell/KAWC/AWWSC@AWW, Nick Rowe/KAWC/AWWSC@AWW, rcsvin@kawc.com, Rick Buchanan/KAWC/AWWSC@AWW
Subject: Re: Owenton Intake

Tom: Thanks for the update. When do you think this work will be completed?

Linda: Who will be taking the lead in Owenton when Tom departs?

****

Nick O. Rowe
Regional Vice President
Service Delivery - Operations
American Water
800 West Hershey Park Drive
Hershey, PA 17033
T: 717 531 3370 (PA)
859 268 6333 (KY)
F: 717 531 3314 (PA)
859 268 6327 (KY)
M: 859 339 5878
E: nrowe@amwater.com
Thomas W Williams

Thomas W Williams
04/05/2006 05:34 PM

To: Nick Rowe/KAWC/AWWSC@AWW, rcsvin@kawc.com, Linda Bridwell, Dillard Griffin/KAWC/AWWSC@AWW, David Shehee/KAWC/AWWSC@AWW, dbickert@amwater.com
cc: Rick Buchanan
Subject: Owenton Intake

Owenton held a meeting today with DOW and others to finalize their project. Rick and I attended. The mayor signed the contracts and the notice-to-proceed will be issued today. This will be for phase I which improves the Severn Creek intake pumps and the raw water line to the plant. I suggest that KAWC coordinate with Owenton as they proceed to acquire funding for the KY River intake (phase II). KAWC's plans for a regional plant in Owen County may reduce the need for a new intake.

Thomas W. Williams, PE
Senior Operations Engineer
Kentucky American Water Co.
2300 Richmond Rd.
Lexington, KY 40502
Direct: 859-268-6352
Fax: 859-268-6374

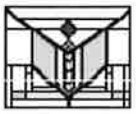

Re: Owenton Intake

Thomas W Williams to: Dillard Griffin 04/13/2006 05:03 PM

Cc: David Shehee, dbickert, Linda Bridwell, mmullins, Nick Rowe, Peggy Slone, rcsvin, Rick Buchanan

Follow Up: Normal Priority.

The inspector, Preston Pendley (859-699-2395), has been given instructions on mounting equipment. Eastland will be ready to fill when the SCADA is ready. Paint inside is done and cathodic protection ready for final setup.

Also, please look for the rectifier that was delivered to KAWC. I don't know why they sent it here, but Danny isn't sure where it went. The box is about 2'x2'x1' and weighs about 70 lbs.

Thanks!

Thomas W. Williams, PE
Senior Operations Engineer
Kentucky American Water Co.
2300 Richmond Rd.
Lexington, KY 40502
Direct: 859-268-6352
Fax: 859-268-6374
Dillard Griffin

Dillard Griffin
04/13/2006 04:15 PM

To: Linda Bridwell/KAWC/AWWSC@AWW, Thomas W Williams/KAWC/AWWSC@AWW, Mark Mullins
cc: David Shehee/KAWC/AWWSC@AWW, dbickert@amwater.com, Nick Rowe/KAWC/AWWSC@AWW, Peggy Slone/KAWC/AWWSC@AWW, rcsvin@kawc.com, Rick Buchanan/KAWC/AWWSC@AWW
Subject: Re: Owenton Intake

Linda/rich
We also need to get some arrangement in terms of the Russell Cave tank and the Eastland tanks. I am not for sure whose e department this is but we need to get an arrangement in terms of the completion of these two tanks. Mark Mullins the contractor from both of these projects are calling him. He has not been involved in these projects, and now the electrical contractor has sent to Mark copies of the electrical drawings for the Eastland Tank. I think that these projects should be better coordinated than the contractor now on his own start trying to work through Mark. I can see some real issues develop here later for perhaps change orders, warranties, completing dates and such. Mark states that the contractors said they were calling him because they didn't know who else to be calling, specifically with the Eastland tank. I understand that there are also issues with the punch list at Russell Cave tank. .We need to get the information of who is overseeing these projects and if they need something from production then the coordinator should be calling not thew contractor calling up wanting to know different issues or get resolutions on his questions. Now he has an e-mail that has been received an e-mail from Alelco in which they are wanting to know about the mounting of the electrical and SCADA equipment. I would think that they would have had this information in the specifications.

Dillard Griffin
Operations Superintendent
Kentucky American Water
2300 Richmond Road
Lexington, KY 40502
859 268 6340 (office)

859 537 0739 (mobile)
859 268 6395 (fax)
Linda Bridwell

Linda Bridwell
04/12/2006 04:47 PM

To: Nick Rowe/KAWC/AWWSC@AWW
cc: David Shehee/KAWC/AWWSC@AWW, dbickert@amwater.com, Dillard Griffin/KAWC/AWWSC@AWW, Nick Rowe/KAWC/AWWSC@AWW, Peggy Slone/KAWC/AWWSC@AWW, rcsvin@kawc.com, Rick Buchanan/KAWC/AWWSC@AWW, Thomas W Williams/KAWC/AWWSC@AWW
Subject: Re: Owenton Intake

Nick,
Rich and I have talked about this some. Currently Strand is doing quite a bit of work in Owen County, and at the Owenton plant. Their project manager, Mark Askin, has developed a good working relationship with both the Mayor and the Judge. Rather than bring someone on our staff in temporarily to help drive this project only to change that contact once we get a more permanent group, I'd like to ask Mark to step in as KAW's representative on this for a month or two. Then hopefully the engineering group will be back up to speed and we can assign a more permanent contact that can see it through to completion. If you're OK with this, I'll contact Mark immediately.
Linda

Linda Bridwell, PE
Project Delivery & Developer Services Manager - WV, KY TN
Southeast Region
2300 Richmond Road
Lexington, KY 40502
Tel: 859-268-6373
Fax: 859-268-6374

Nick Rowe

Nick Rowe
Sent by: Peggy Slone

04/06/2006 02:17 PM

To: Thomas W Williams/KAWC/AWWSC@AWW
cc: David Shehee/KAWC/AWWSC@AWW, dbickert@amwater.com, Dillard Griffin/KAWC/AWWSC@AWW, Linda Bridwell/KAWC/AWWSC@AWW, Nick Rowe/KAWC/AWWSC@AWW, rcsvin@kawc.com, Rick Buchanan/KAWC/AWWSC@AWW
Subject: Re: Owenton Intake

Tom: Thanks for the update. When do you think this work will be completed?

Linda: Who will be taking the lead in Owenton when Tom departs?

****

Nick O. Rowe
Regional Vice President
Service Delivery - Operations
American Water
800 West Hershey Park Drive
Hershey, PA 17033
T: 717 531 3370 (PA)
859 268 6333 (KY)
F: 717 531 3314 (PA)
859 268 6327 (KY)

M: 859 339 5878
E: nrowe@amwater.com
Thomas W Williams

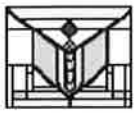

Thomas W Williams
04/05/2006 05:34 PM

To: Nick Rowe/KAWC/AWWSC@AWW, rcsvin@kawc.com, Linda Bridwell, Dillard Griffin/KAWC/AWWSC@AWW, David Shehee/KAWC/AWWSC@AWW, dbickert@amwater.com
cc: Rick Buchanan
Subject: Owenton Intake

Owenton held a meeting today with DOW and others to finalize their project. Rick and I attended. The mayor signed the contracts and the notice-to-proceed will be issued today. This will be for phase I which improves the Severn Creek intake pumps and the raw water line to the plant. I suggest that KAWC coordinate with Owenton as they proceed to acquire funding for the KY River intake (phase II). KAWC's plans for a regional plant in Owen County may reduce the need for a new intake.

Thomas W. Williams, PE
Senior Operations Engineer
Kentucky American Water Co.
2300 Richmond Rd.
Lexington, KY 40502
Direct: 859-268-6352
Fax: 859-268-6374

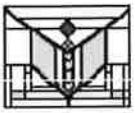

Re: Connect Owen County Report

Thomas W Williams to: Cutler, Sage \(CONNKY\) <scutler@connectky.org>

05/05/2006 04:31 PM

Cc: Linda Bridwell

Follow Up: Normal Priority.

Sage,
I'm in Arizona now. I am copying Linda Bridwell at Kentucky American. She will decide how they will participate.

All the best,
Tom

Thomas W. Williams
Senior Operations Engineer
Development Services
Arizona American Water Company
19280 N. 7th St., Suite 201
Phoenix, AZ 85024
Direct: 623-445-2435
Fax: 623-445-2452
"Cutler, Sage \(CONNKY\)" <scutler@connectky.org>

"Cutler, Sage \(CONNKY\)" <scutler@connectky.org>

05/05/2006 01:20 PM

To: <Lcornett@hbrside.com>, <BeckyDoolin@bellsouth.net>, <ggibson@owenelectric.com>, <owenjudge@bellsouth.net>, <robinson@therobinsonfamily.com>, <EdSeale@newhorizonsmedicalcenter.com>, <milkweedCityHall@bellsouth.net>, "Cleveland, Mark" <mclevel@owen.k12.ky.us>, <billandbeck@therobinsonfamily.com>, "Cornette, Naomi - DTC" <ncornett@owen.k12.ky.us>, <cgill@owenelectric.com>, "Matthews, Cathy" <cathymatthews@bellsouth.net>, <berniepoe@hotmail.com>, <kschneider@kyinnovation.com>, <cpslaw@bellsouth.net>, <watkins@monterey-baptist.org>, <thomas.williams@amwater.com>, "Taylor, Brianna \(Gov Office\)" <Brianna.Taylor@ky.gov>

cc: <NHEDITOR@BELLSOUTH.NET>, <candk@copper.net>, "Duncan, Jack" <jduncan@owen.k12.ky.us>, <cedarford@toast.net>, <bhood@owenelectric.com>, <jhubbert@hickorybendvines.com>, <bmarshall@owenelectric.com>, <hickorybend@kih.net>, "Ramsey, Michael" <mramsey@owen.k12.ky.us>, <kstrohme@uky.edu>, <jeff.burt@nkadd.org>, <lisa.cooper@nkadd.org>, "Hall, Jay \(GOLD\)" <Jay.Hall@ky.gov>, <darrell.ishmael@ekpc.coop>, <hank.list@ekpc.coop>, <timm@owentonNewsHerald.com>, <john_salyers@bunning.senate.gov>, <jsalyers7@insightbb.com>, <robert.schrage@nkadd.org>, "Stanton, John M \(Gov Office\)" <JohnM.Stanton@ky.gov>, <john.mays@nkadd.org>, <david.weller@bellsouth.com>, <liberty_cable@netzero.net>

Subject: Connect Owen County Report

Team,

Our next meeting is scheduled for **Monday, May 22 at 2:00 pm EST at the County Library in Owenton.**

The **Full County Report** is now available on our website at -
http://www.connectkentucky.org/localinfo/countyprofiles/ - select your county from the list.

This contains the **Strategic Technology Plan**, county demographics and statistics, broadband and census block maps, plus a Best Practices Resource Guide. I hope you find this information useful and beneficial.

I look forward to hearing the progress from each of the Project Teams.

Sage Cutler
Manager, Central Ky Region
ConnectKentucky
Phone: 859.734.3851
Mobile: 270.799.0874
Email: scutler@connectky.org

www.connectkentucky.org
ConnectKentucky is a division of The Center for Technology Enterprise, Inc.

Owen County Press Release.doc

Owen County Leaders Launch Technology Plan

Local Leaders Take Steps Toward a High-Tech Future

FOR IMMEDIATE RELEASE – Mar. 13, 2006

Contact: Sage Cutler, Manager, Central Kentucky Region, ConnectKentucky
Phone: 859-734-3851; Mobile: 270-799-0874; Email: scutler@connectky.org

Owenton, Ky. – Local leaders have launched a plan to help Owen County provide the world-class technology its residents need to thrive in the 21st Century.

A team of local volunteers recently completed a "road map" for technology-based growth and development during a months-long meeting process. County leaders built the plan with guidance from ConnectKentucky, a non-profit group that believes technology can help Kentucky remain the place of choice to live, work and raise a family.

The Connect Owen County report makes recommendations for technology-based improvements in nine sectors of the community: business and industry; healthcare; libraries; K-12 education; higher education; community-based organizations; government; agriculture; and tourism, recreation and parks.

The Owen County eCommunity Leadership Team will work on projects identified as the top priorities for the next year and a half:

- **Increase Technology Education** – Organize existing technology classes and offer new ones, with the goal of increasing the computer usage rate in the county.
- **Create a Community Web Portal** – Create a community website that serves as an entry point for local websites for tourism, businesses, governments and organizations.
- **Make Government More Accessible Online** – Create and/or improve government web sites to make them more user-friendly and business-oriented, reducing the need for citizens to visit an office.

The report includes dozens of recommendations for future steps, such as enacting online meter reading, providing every child a computer or laptop at home, and encouraging healthcare providers to switch from paper to electronic medical records.

The meeting process is part of Gov. Ernie Fletcher's *Prescription for Innovation: Delivering Broadband Technology for a 21st Century Kentucky*, a plan to ensure that every Kentucky household has access to high-speed Internet by 2007. The plan ultimately aims to increase the number of high-tech companies and jobs in Kentucky.

ConnectKentucky's local project manager, Sage Cutler, will continue to work with local volunteers as they implement the plan.

Owen County Judge-Executive William O'Banion said he would like to see an expansion of broadband – especially wireless service – offered in the county. "Planning for technology is a process we must do," he said. "So I encourage anyone who's interested in learning more to join us in this effort."

Kentucky has begun to experience a technology turnaround as a result of recent efforts. The Federal Communications Commission reports that in the past two years, Kentucky's growth rate of broadband subscribers led the nation. Currently, 32 percent of Kentucky adults subscribe to broadband Internet service, a number that is closing the gap to the national average of 33 percent. Additionally, the number

of Kentucky households that have the ability to subscribe to broadband increased from 60 percent in 2003 to 77 percent in 2005.

High-speed Internet technology promises to enhance the economy and quality of life in Kentucky. For example, doctors can remotely monitor patients with chronic illnesses; working parents can complete their college degrees by attending classes online; and small businesses can sell their products worldwide.

Already in Kentucky, broadband service is being used to remotely arraign prisoners in state courts, to web-cast high school athletic games, and to conduct biotech research in a rural county. Employers who located thousands of jobs in Kentucky attributed their decision to the availability of high-speed Internet.

For more information, or to participate in future meetings, please contact ConnectKentucky Project Manager Sage Cutler at 859-734-3851 or scutler@connectky.org.

Members of the Owen County eCommunity Leadership Team include:

Name	Organization
Mark Cleveland	Owen County Schools
Bill Cluxton	Owen County Tourism
Linda Cornette	Harborside Healthcare
Naomi Cornette	Owen County Schools
Becky Doolin	Owen County Public Library
Frank Downing	Owen County Industrial Authority
Chuck Gill	Owen Electric Company
Gary Gibson	Owen Electric Company
David "Milkweed" Wotier	City of Owenton
Cathy Matthews	Owen County Public Library
William "Billy" O'Banion	Owen County Fiscal Court
Bernard Poe	New Horizons Health Systems, Inc.
Mark Robinson	Kentucky Jamboree
Keith Schneider	NKU – Innovation Network
Ed Seale	New Horizons Medical Center
Chris Spurgeon	Owen County Chamber of Commerce
Darrell Traylor	First Farmers Bank
Tony Watkins	Monterey Baptist Church
Tom Williams	Ky-American Water

About ConnectKentucky:
ConnectKentucky is a non-profit alliance of businesses, government entities and universities working to promote technology-based economic development in Kentucky. By leveraging the latest in technology and networking, ConnectKentucky is ensuring that Kentucky remains the place of choice to live, work and raise a family. Through our work, Kentucky has been recognized as a national model for technology development. For more information, please visit www.connectkentucky.org.

###

Re: Owen County Fiscal Court WX21187320 - $750,000

Thomas W Williams to: Milton, Debby \(KIA\) <Debby.Milton@ky.gov> 03/05/2007 10:40 AM

Cc: "Hellard, Amy \(KIA\)", "Gritton, Jane \(KIA\)", "Tapp, John \(KIA\)", "Rice, Kelli \(KIA\)", owenjudge, "Potter, Robert \(KIA\)", "Anderson, Suzanne \(KIA\)", Michael D Galavotti, bridwell

Follow Up: Normal Priority.

1 attachment

OwenCoFCWX21187320-$750,000.xls

Debby,
I have moved to Arizona. I am no longer involved in the Owen County projects. I have copied Michael Galavotti and Linda Bridwell at Kentucky-American.

Thanks,
Tom

Thomas W. Williams, PE*
Engineering Manager - Developer Services
Western Region
American Water
19280 N. 7th St., Suite 201
Phoenix, AZ 85024
Direct: 623-445-2435
Fax: 623-445-2452
*Licensed in AZ, NM, and KY

"Milton, Debby \(KIA\)" <Debby.Milton@ky.gov>
03/05/2007 07:02 AM

To: <thomas.williams@amwater.com>, <owenjudge@bellsouth.net>
cc: "Anderson, Suzanne \(KIA\)" <Suzanne.Anderson@ky.gov>, "Gritton, Jane \(KIA\)" <Jane.Gritton@ky.gov>, "Hellard, Amy \(KIA\)" <Amy.Hellard@ky.gov>, "Potter, Robert \(KIA\)" <Robert.Potter@ky.gov>, "Rice, Kelli \(KIA\)" <Kelli.Rice@ky.gov>, "Tapp, John \(KIA\)" <John.Tapp@ky.gov>
Subject: Owen County Fiscal Court WX21187320 - $750,000

3/5/07
Infrastructure for Economic Development Fund for Tobacco Producing Counties Grant Assistance Agreements (HB267)
Owen County Fiscal Court WX21187320 - $750,000 - Water Line Extension Throughout Owen County

Thomas, Judge O'Banion:
We have received the grant agreement for the above referenced grant. I have attached a checklist indicating the status of items submitted to date.

Step 1, Before Project is Bid
The following items remain outstanding
Estimated Budget
SAI# assigned by State Clearinghouse
Funding Certificate (Exhibit 11)

Step 2, After Project is Bid
The following items remain outstanding
As-bid Budget
Clearinghouse Comments

KIA would like to place this grant on the 4/17/07 agenda for review by Capital Projects and Bond Oversight Committee. Therefore, we need the outstanding items for Step 1 **asap**. Upon CPBOC review, KIA will complete the signature process and pending submittal of the outstanding items, the County may be eligible to request up to 50% Advance of Planning/Design Fees. However, remaining funds **would not be released** until we had all the outstanding items. All Request for Payment including supporting invoices will need to be submitted to KIA by the 10th of the month. Thank you.

<<OwenCoFCWX21187320-$750,000.xls>>

Debby Milton
Kentucky Infrastructure Authority
1024 Capital Center Drive, Suite 340
Frankfort, KY 40601
phone: 502-573-0260
fax: 502-573-0157
debby.milton@ky.gov
hhtp://kia.ky.gov

Water Line Extension — Owen County Fiscal Court — 3/5/07

WX21187320 $750,000 tobacco

249T-2005

Thomas Williams: thomas.williams@amwater.com

William P. O'banion owenjudge@bellsouth.net

CHECKLIST

STEP 1, Before Project is Bid:

1	Executed Grant Assistance Agreement	3/1/07
2	Exhibit 1 - Project Profile and Estimated Project Budget	
3	Exhibit 2 - Resolution	3/1/07
4	Exhibit 3 - Schedule of Current (and proposed if applicable) Rates and Charges	3/1/07
5	Exhibit 6 - Certification of Funding	
6	Clearinghouse State Applicator Identifier # (SAI)	
7	Application for Electronic Transfer of Funds Form	3/1/07

appv'd by: CPBOC 4/17/07
signed by: Legal
signed by: KIA

STEP 2, After Project is Bid:

1	Exhibit 4 - Revised Project Profile (if applicable) and Project Budget based on Project Bids	
2	Additional Covenants and Agreements (if applicable)	n/a
3	Other Funding Commitment (if applicable)	
4	Documentation of Clearinghouse Endorsement and Comments	

STEP 3, Project Closeout:

1	Final Design Plans in an AutoCAD Drawing File Format (DWG), referenced to the appropriate (North or South) Kentucky State Plane Coordinate System (NAD83-Survey Feet) on a Compact Disc (CD) to be submitted within 3 months of initiation of construction	
2	If there is a significant deviation from the Final Design Plan during construction, As-built Plans shall also be provided to the Authority, within three months of construction completion	
3	Exhibit 5 - Fully executed Certificate of Completion	

Note: Administrative Fee
Per Section 7 of the Grant Agreement, the Grantee agrees to pay to the Authority an fee equal to 1/2 of 1% of the principal amount of the Grant. The Administrative Fee shall be due and payable on the date the Grantee's initial Request for Payment and Project Status Report is submitted to the Authority

Re: Owenton Water Issue
Jason M Hurt to: Keith L Cartier 07/06/2011 05:20 PM
Cc: Dalvin J Krug, Douglas Brock, Lance E Williams, Linda Bridwell, Michael E Moler, R Kevin Kruchinski

Follow Up: Normal Priority.

Completion of the calibration of the new model is contingent on conducting field flow tests, however, our existing model is fairly recent, calibrated in 08-09. I'll review it to look at the g'town supply and tank fill scenarios.

Thanks,

Jason M. Hurt, PE
Project Manager - Engineering
Kentucky American Water
2300 Richmond Road
Lexington, KY 40502
T 859.335.3415
F 859.335.3393
Jason.Hurt@amwater.com

Keith L Cartier/KAWC/AWWSC

Keith L Cartier/KAWC/AWWSC
07/06/2011 04:48 PM

To Linda Bridwell/KAWC/AWWSC@AWW
cc Dalvin J Krug/KAWC/AWWSC@AWW, Douglas Brock/KAWC/AWWSC@AWW, Lance E Williams/KAWC/AWWSC@AWW, Michael E Moler/KAWC/AWWSC@AWW, R Kevin Kruchinski/KAWC/AWWSC@AWW, Jason M Hurt/KAWC/AWWSC@AWW
Subject Re: Owenton Water Issue

We'll all be in root cause training tomorrow morning from 8 - 12. Let's plan on getting together right afterward to discuss.

Linda, Jason - will you be able to determine ahead of then the soonest that the new model will be ready?

Keith Cartier
Vice President, Operations
Kentucky American Water
1 859 268 6324 Office
1 859 321 9803 Cell
keith.cartier@amwater.com
Linda Bridwell/KAWC/AWWSC

Linda Bridwell/KAWC/AWWSC
07/06/2011 02:41 PM

To R Kevin Kruchinski/KAWC/AWWSC@AWW

cc Dalvin J Krug/KAWC/AWWSC@AWW, Douglas Brock/KAWC/AWWSC@AWW, Keith L Cartier/KAWC/AWWSC@AWW, Lance E Williams/KAWC/AWWSC@AWW, Michael E Moler/KAWC/AWWSC@AWW
Subject Re: Owenton Water Issue

Kevin,
Thanks - you are absolutely correct. No water pressure for hours is not only unacceptable, its not permissable under PSC rules and regulations without a boil water advisory.

To that end, the system was not designed for the southeastern part of the county to be served from Owenton, it was designed to be served from the Georgetown connection. We made that change as a cost savings measure, but it was my understanding at the time that we would always have times of the year that would need to utilize the connection. I would strongly, strongly advise that we turn on that connection before we ever consider restrictions. Especially since the Owen County folks have seen their bills go up because of the new plant. Also, we need to look at if we need to put some of our out of service tanks back in service to allow them to balance out some peak demands. Then on rain days, we've got more places to make up.

I'll check with Jason on the status of the calibration of the model, but we have a model we can use. And yes, we need to check on leaks. I'm happy to discuss further.
Linda

Linda Bridwell, PE
Director Water Quality & Environmental Compliance
Kentucky American Water
2300 Richmond Road
Lexington, KY 40502
Tel: 859-268-6373
Fax: 859-268-6374

R Kevin Kruchinski/KAWC/AWWSC

AMERICAN WATER

R Kevin Kruchinski/KAWC/AWWSC
07/06/2011 01:11 PM

To Lance E Williams/KAWC/AWWSC@AWW, Douglas Brock/KAWC/AWWSC@AWW, Michael E Moler/KAWC/AWWSC@AWW, Keith L Cartier/KAWC/AWWSC@AWW, Linda Bridwell/KAWC/AWWSC@AWW
cc Dalvin J Krug/KAWC/AWWSC@AWW
Subject Owenton Water Issue

All

We have a pending situation in Northern regarding our ability to adequately meet system demand, and while I always hate delivering bad news, I believe you all need to be aware. I don't know when the problem really began but I am told that it has been occurring from time to time over the last couple of years. Our employees, as well as several irritated customers, explained to me that parts of our system either have low pressure (<30 psi) or no water ranging from hours to days. I believe this is absolutely unacceptable. This situation came up a few weeks ago in which the water levels in our tanks got very low.

I thought this was an isolated incident but it appears we are approaching a similar situation due to the hot weather. During the last event, we were able to locate a few leaks so that we could break even with demand but we did not gain in our tanks until it began raining and demand dropped off. Currently we are down to 17' in our tank and we are slowly losing ground. Our crews are working to locate even the most minor leaks but it really appears to be more from sales and not leaks. From working with Rachel and evaluating our sales, our NRW is actually quite normal (<20%) in the district.

As far as options, I think we need to look at putting the Georgetown connection in service if fairground tank drops down under 10' until we can adequately meet demand and quite possibly until we get some better options. This would require us having chloramines in the southern part of our system since we can not keep the free chlorine conversion system operational. Also, the unfortunate part of purchasing from Georgetown is that we must flush almost 50% of the water we buy in order to meet WQ criteria (I could use some help from David / WQ in making this change). I don't know how many customers we can serve through this connection but every gallon will help us. Another option is to put a couple of our tanks back in service in the system. They were taken out of service due to water quality issues but they could possibly help us absorb some of these shock loads we get from the weekends and hot weather. I am running low on solutions so any thoughts or ideas are welcome.

Also, at what point do we want to start reaching out to the elected officials in Owen County and look at restrictions? At some point in the very near future we are going to have eliminate new services until we can increase our supply because we just don't have the water in the summer months. I hope when bills go out next week that people cut back on their usage but as of today people are still watering lawns and filling pools.

Ultimately, I believe our Northern tie-in really needs to be re-evaluated and explore a phased approach. If we could get 1/3 or even 1/4 of our customers tied in, we would be much better off in the Northern district. Doug- I would really like to get Wes back up here for several days so that he can thoroughly check the system for leaks.

****

Kevin Kruchinski
Kentucky American Water
16035 Hwy 127 South
Owenton, KY 40359
502-484-8373 ext. 1
859-361-1770 (cell)

AMERICAN WATER

Re: Owenton

David Shehee to: Cheryl D Norton, R Kevin Kruchinski, Linda Bridwell, Keith L Cartier, Michael E Moler 12/06/2011 01:16 PM

Follow Up: Normal Priority.

Never got below 20 psi at Ellis or Perry tanks, so no BWA necessary. Sending out water at 0.06 NTU right now and never got close to a regulatory trigger despite some less than ideal settled water. Worst should be behind us now. God is good and still answers prayers :)

Cheryl D Norton Kevin - thanks for the update and thanks so m... 12/06/2011 01:09 PM EST

From: Cheryl D Norton
To: R Kruchinski; Linda Bridwell; Keith Cartier; Michael Moler; David Shehee
Date: 12/06/2011 01:09 PM EST
Subject: Re: Owenton

Kevin - thanks for the update and thanks so much to the team for their great work today. Sounds like we dodged a huge bullet!

Please keep me posted.

Cheryl

Cheryl D. Norton
President
Kentucky American Water
2300 Richmond Road
Lexington, KY 40502

Office (859) 268-6339
Cell (859) 533-3540

R Kevin Kruchinski It appears treatment has come around and we... 12/06/2011 01:02 PM EST

From: R Kevin Kruchinski
To: Linda Bridwell; Cheryl Norton; Keith Cartier; Michael Moler; David Shehee
Date: 12/06/2011 01:02 PM EST
Subject: Re: Owenton

It appears treatment has come around and we may avoid any potential problems. We have good water quality coming through the filters and we are putting good water into the system. The team is continuing to monitor the plant and I will provide an update in one hour.

KK
Kevin Kruchinski
Kentucky American Water
859-361-1770

Linda Bridwell We are about two hours away from having a s... 12/06/2011 12:17 PM EST

From: Linda Bridwell

To: Cheryl Norton; Keith Cartier; Michael Moler; David Shehee; R Kruchinski
Date: 12/06/2011 12:17 PM EST
Subject: Owenton

We are about two hours away from having a serious issue in Owenton. We lost treatment last night at 4 am and stopped putting water out the door. They have been scrambling all morning trying restore treatment but are not there yet. But we are nearing the end of how long we can go without the plant. If treatment is not restored within the next two hours we will be required to issue system wide boil water.

I know you are both out of the office so I want to make sure you have an opportunity to know what's going on before the last minute.

AMERICAN WATER

Re: Owenton
David Shehee to: R Kevin Kruchinski, Dalvin J Krug 12/06/2011 02:49 PM
Cc: Linda Bridwell

Follow Up: Normal Priority.

Treatment good. Effluent turbidity at 0.05 NTU. About 2.6 feet in Ellis tank. 59.3 inches in CW and 14.8 in ground tank. Fighting to catch up right now.

R Kevin Kruchinski Can I get a status update? KK 12/06/2011 02:31 PM EST

From: R Kevin Kruchinski
To: David Shehee; Dalvin Krug
Cc: Linda Bridwell
Date: 12/06/2011 02:31 PM EST
Subject: Re: Owenton

Can I get a status update?

KK
Kevin Kruchinski
Kentucky American Water
859-361-1770

David Shehee Never got below 20 psi at Ellis or Perry tanks,... 12/06/2011 01:16 PM EST

From: David Shehee
To: Cheryl Norton; R Kruchinski; Linda Bridwell; Keith Cartier; Michael Moler
Date: 12/06/2011 01:16 PM EST
Subject: Re: Owenton

Never got below 20 psi at Ellis or Perry tanks, so no BWA necessary. Sending out water at 0.06 NTU right now and never got close to a regulatory trigger despite some less than ideal settled water. Worst should be behind us now. God is good and still answers prayers :)

Cheryl D Norton Kevin - thanks for the update and thanks so m... 12/06/2011 01:09 PM EST

From: Cheryl D Norton
To: R Kruchinski; Linda Bridwell; Keith Cartier; Michael Moler; David Shehee
Date: 12/06/2011 01:09 PM EST
Subject: Re: Owenton

Kevin - thanks for the update and thanks so much to the team for their great work today. Sounds like we dodged a huge bullet!

Please keep me posted.

Cheryl

Cheryl D. Norton
President
Kentucky American Water

2300 Richmond Road
Lexington, KY 40502

Office (859) 268-6339
Cell (859) 533-3540

R Kevin Kruchinski **It appears treatment has come around and we...** 12/06/2011 01:02 PM EST

From: R Kevin Kruchinski
To: Linda Bridwell; Cheryl Norton; Keith Cartier; Michael Moler; David Shehee
Date: 12/06/2011 01:02 PM EST
Subject: Re: Owenton

It appears treatment has come around and we may avoid any potential problems. We have good water quality coming through the filters and we are putting good water into the system. The team is continuing to monitor the plant and I will provide an update in one hour.

KK
Kevin Kruchinski
Kentucky American Water
859-361-1770

Linda Bridwell **We are about two hours away from having a s...** 12/06/2011 12:17 PM EST

From: Linda Bridwell
To: Cheryl Norton; Keith Cartier; Michael Moler; David Shehee; R Kruchinski
Date: 12/06/2011 12:17 PM EST
Subject: Owenton

We are about two hours away from having a serious issue in Owenton. We lost treatment last night at 4 am and stopped putting water out the door. They have been scrambling all morning trying restore treatment but are not there yet. But we are nearing the end of how long we can go without the plant. If treatment is not restored within the next two hours we will be required to issue system wide boil water.

I know you are both out of the office so I want to make sure you have an opportunity to know what's going on before the last minute.

AMERICAN WATER

Re: Owenton WTP Treatment Problem A3 final

David Shehee to: R Kevin Kruchinski 12/27/2011 03:36 PM

Cc: Kevin K, Dalvin J Krug, Douglas R Brooks, Keith L Cartier, Linda Bridwell, Michael E Moler

Follow Up: Normal Priority.

Kevin,

I would like to discuss this a bit more to make sure we are all on the same page before finalizing this A3. I am out until after the new year, but would make myself available this week if necessary.

Thanks,

David

****

David B. Shehee
Supervisor, Water Quality and Environmental Compliance
Kentucky American Water
2300 Richmond Road
Lexington, Kentucky 40502
(859) 335-3660 Office
(859) 335-3388 Fax
david.shehee@amwater.com
www.kentuckyamwater.com

R Kevin Kruchinski Attached is what I would like to call our finalized... 12/27/2011 01:15:24 PM

From: R Kevin Kruchinski/KAWC/AWWSC
To: Kevin K <kruchirk@amwater.com>
Cc: Dalvin J Krug/KAWC/AWWSC@AWW, David Shehee/KAWC/AWWSC@AWW, Douglas R Brooks/KAWC/AWWSC@AWW, Keith L Cartier/KAWC/AWWSC@AWW, Linda Bridwell/KAWC/AWWSC@AWW, Michael E Moler/KAWC/AWWSC@AWW
Date: 12/27/2011 01:15 PM
Subject: Re: Owenton WTP Treatment Problem A3 final

Attached is what I would like to call our finalized A3 regarding the Owenton treatment upset earlier in December. It is believed we had two main problems- the first being a lack of timely coagulant adjustment and second being a faulty procedure for operating the cone. The operator obviously had a responsibility to change feed rates according to source water conditions but in this case the operator believed he was significantly overfeeding chemicals and he was aware of the changing conditions. Dalvin has specifically addressed the operator's inaction and should a future problem occur, disciplinary actions will be forthcoming. The second operator involved was simply following a procedure to operate the cone and it was later determined that the procedure was flawed which compounded the treatment problem. I believe we will not see future treatment upsets to this severity as a result of improper coagulant feed rates or improper cone operation due to the numerous changes we have already implemented at the Owenton plant. In addition, Dalvin has spoken with the operators involved and we don't believe any disciplinary actions are warranted.

A revised standard operating procedure has been developed and all operators have been trained. The water quality group has become further involved with treatment at the plant to help operators better understand if they are over or under feeding a particular chemical. The log sheets have been revised to better capture data and help evaluate plant conditions. A formalized call list has been created to provide the operators an additional resource when things are not going well. Dalvin is having additional meetings

with the plant operators to ensure everyone is on the same page regarding treatment and plant operating procedures.

[attachment "A3 Owenton wtp failure final kk.doc" deleted by David Shehee/KAWC/AWWSC]

****

Kevin Kruchinski
Kentucky American Water
102 N. Main St.
Owenton, KY 40359
502-484-5118
859-361-1770 (cell)

R Kevin Kruchinski Here is our working document based upon our d... 12/08/2011 03:25:13 PM

Re: Pump work in Owenton
Keith L Cartier to: R Kevin Kruchinski 11/05/2009 08:51 AM
Cc: Mark Mullins, Rick Buchanan

Thanks Kevin. Let me know if and/or when you need any support from me.

Keith Cartier
Vice President, Operations
Kentucky American Water
1 859 268 6324 Office
1 859 321 9803 Cell
keith.cartier@amwater.com
R Kevin Kruchinski/KAWC/AWWSC

AMERICAN WATER

R Kevin Kruchinski/KAWC/AWWSC
11/05/2009 08:13 AM

To Keith L Cartier/KAWC/AWWSC@AWW
cc Rick Buchanan/KAWC/AWWSC, Mark Mullins/KAWC/AWWSC
Subject Pump work in Owenton

Keith

To follow-up with our conversation about a pump problem in Owenton, I have contacted 2 of 3 possible contractors to get pricing and opinions on how to correct our broken pump at Severn Creek. I will be contacting the manufacturer as well to see if we have any warranty or an idea as to why this problem occurred. We will update when we have a better idea of cost and a plan to correct. Attached are a couple pictures of the damage on the pump discharge line.

Mark

I would like you to take a look at our situation at Severn and get your opinion as well.

[attachment "IMG_1702.JPG" deleted by Keith L Cartier/KAWC/AWWSC] [attachment "IMG_1701.JPG" deleted by Keith L Cartier/KAWC/AWWSC]

****

Kevin Kruchinski
Kentucky American Water
2300 Richmond Rd
Lexington, KY 40502
859-268-6321 (office)
859-361-1770 (cell)
859-268-6395 (fax)

AMERICAN WATER

Owenton WWTP clarifier

R Kevin Kruchinski to: Lance Williams 05/23/2011 04:02 PM
Cc: "Michael Moler", "Keith Cartier"

We have a clarifier drive and gearbox that is 100% broke. The rebuild is 12K or a new one is 65K. The price difference is primarily due to the old style being discontinued. The unit is 20 years old and I believe a new one is the way to go if capital is available. Please advise if capital is available for the replacement.

KK
Kevin Kruchinski
Kentucky American Water
859-361-1770

AMERICAN WATER

Owenton WTP ls pump

R Kevin Kruchinski to: Lance Williams 11/08/2011 06:02 PM

Cc: "Mary Ellen Pugh", "Michael Moler", "Dalvin Krug"

History: This message has been replied to.

Lance

We had a low service pump fail at the Owenton plant. The manufacturer is able to correct the pump at a cost of $6,500. The correction will result in a new top shaft, middle shaft and couplings, bearings, and impeller collets. These new parts will extend the life of the pump greater than 50% of the expected life so I would like to capitalize the project. Please advise.

Thanks
KK
Kevin Kruchinski
Kentucky American Water
859-361-1770

Owenton Water treatment plant
Dillard Griffin to: Lance E Williams 11/18/2008 01:45 PM
Cc: kruchirk, rick.buchanan, keith.cartier

History: This message has been replied to.

Lance, do you know the status of the investigation about the long term plans for the Owenton Water treatment plant. I know that some were looking into evaluating the site to see the probability of connecting the Owenton distribution network into the new pipeline or should we leave that plant in service. Also. do we know the status of the chemical repair and upgrade project that was planned?

I am hearing rumors that we may want to leave that plant open and not consider connecting it into the New pipeline network and that the plans are to proceed with the chemical upgrades. If this is the case then there is much more work that we need to start planning for. One being a plan for disposing of the residuals which have accumulated at the old plant site. If we are going to continue to operate the existing plant then we need a residuals plan, then we need to get into a budget a plan for this.

If you can provide an update on the status or the current thinking about the existing plant then we will know more about plans for maintenance, equipment, and some more firm multi year operating plans. with residuals disposal and the existing old plant being large items that we need to get an operating plan in place for.

Dillard Griffin
Manager, Production Operations
Kentucky American Water
office 859 268 6340
mobile 859 537 0739
dillard.griffin@amwater.com

AMERICAN WATER

Owenton Water Issue

R Kevin Kruchinski to: Lance E Williams, Douglas Brock, Michael E Moler, Keith L Cartier, 07/06/2011 01:11 PM

Cc: Dalvin J Krug

All

We have a pending situation in Northern regarding our ability to adequately meet system demand, and while I always hate delivering bad news, I believe you all need to be aware. I don't know when the problem really began but I am told that it has been occurring from time to time over the last couple of years. Our employees, as well as several irritated customers, explained to me that parts of our system either have low pressure (<30 psi) or no water ranging from hours to days. I believe this is absolutely unacceptable. This situation came up a few weeks ago in which the water levels in our tanks got very low. I thought this was an isolated incident but it appears we are approaching a similar situation due to the hot weather. During the last event, we were able to locate a few leaks so that we could break even with demand but we did not gain in our tanks until it began raining and demand dropped off. Currently we are down to 17' in our tank and we are slowly losing ground. Our crews are working to locate even the most minor leaks but it really appears to be more from sales and not leaks. From working with Rachel and evaluating our sales, our NRW is actually quite normal (<20%) in the district.

As far as options, I think we need to look at putting the Georgetown connection in service if fairground tank drops down under 10' until we can adequately meet demand and quite possibly until we get some better options. This would require us having chloramines in the southern part of our system since we can not keep the free chlorine conversion system operational. Also, the unfortunate part of purchasing from Georgetown is that we must flush almost 50% of the water we buy in order to meet WQ criteria (I could use some help from David / WQ in making this change). I don't know how many customers we can serve through this connection but every gallon will help us. Another option is to put a couple of our tanks back in service in the system. They were taken out of service due to water quality issues but they could possibly help us absorb some of these shock loads we get from the weekends and hot weather. I am running low on solutions so any thoughts or ideas are welcome.

Also, at what point do we want to start reaching out to the elected officials in Owen County and look at restrictions? At some point in the very near future we are going to have eliminate new services until we can increase our supply because we just don't have the water in the summer months. I hope when bills go out next week that people cut back on their usage but as of today people are still watering lawns and filling pools.

Ultimately, I believe our Northern tie-in really needs to be re-evaluated and explore a phased approach. If we could get 1/3 or even 1/4 of our customers tied in, we would be much better off in the Northern district.
Doug- I would really like to get Wes back up here for several days so that he can thoroughly check the system for leaks.

****
Kevin Kruchinski

Kentucky American Water
16035 Hwy 127 South
Owenton, KY 40359
502-484-8373 ext. 1
859-361-1770 (cell)

Owenton Severn Creek Intake Pump #1 VFD Replacement

Mark Mullins to: Lance E Williams, Mary Ellen Pugh, Cheryl A Taylor 10/04/2010 04:44 PM

Cc: Keith A Buffin, Rick Buchanan

History: This message has been replied to.

Lance,

We are in need of this VFD and I need to get it on order as soon as I can. But I do not understand how ownership works on this intake at Severn Creek. I guess we just handle it like we own it. The other intake pump there #2 is being overhauled due to pump failure. Right now we have #1 pump running off #2 VFD.

Let me know so I can get this on order as soon as possible. It was put in service July 2007.

Owenton Severn Creek Intake pump VFD replacement Work Order Req Form.xls

Mark Mullins
Production Supervisor / Maintenance
Kentucky American Water
859 268 6346 Office
859 576 3095 Cell
859 335 3346 Fax
mark.mullins@amwater.com

KENTUCKY-AMERICAN WATER COMPANY
INVESTMENT TASK ORDER

Form WO-INVEST-A
1/05/00

$ 12,422

Descriptive Title:
Replacement of Owenton Severn Creek Intake Pump #1 Variable Frequency Drive.

Purpose:
To replace the failed Variable Frequency Drive for Owenton Severn Creek Pump #1 due to failure and it is more economical to replace then to repair.

Budget Line Item No:

Cash Forecast:

Contractor:	Drive being bought from Air Equipment Company	Municipality:	
Does the proposed work replace any company owned property?	Yes	Related Retirement	

Cost Detail	Work Order: Job Number: Item:	Level meters					Project Total
Permits	105125.31						-
Easements	105125.11						-
Legal	105175.31						-
Transf Expend	105110.31						-
Materials	105150.31	9,304					9,304
O&C	105150.31	645	-	-	-	-	645
Co Labor	105200.31	960	-	-	-	-	960
Grp Ins/401K	105250.31	14	-	-	-	-	14
Other OH	105250.31	397	-	-	-	-	397
P/R Tax OH	105250.31	76	-	-	-	-	76
OH-Infrastructure	105260.21	1,026	-	-	-	-	1,026
Contract Labor	105275.31						-
AFUDC Debt	105350.31	-	-	-	-	-	-
AFUDC Equity	105375.31	-	-	-	-	-	-
Other	105150.31						-
Design	105900.31						-
Subtotal excl O&C and OH-Infra		10,750	-	-	-	-	10,750
Subtotal incl O&C		11,395	-	-	-	-	11,395
Totals		$ 12,422	$ -	$ -	$ -	$ -	$ 12,422

COMPLETION

Date Field Work Started

	Date	Project Mgr	Date Submitted	Date UPIS
In Service (Code 99 in JDE)				
Completed				

Completed Amount $_____
Variance $_____ _____%

Attach JDE task order cost analysis. If project variance exceeds $1,000 AND 10% of estimate, make revisions before closing the task order (and attach explanation).

AMERICAN WATER

Owenton Plant Capacity

R Kevin Kruchinski to: Lance E Williams 02/03/2010 12:19 PM

Design capacity of 1.44 mgd, actual capacity is much less.

****

Kevin Kruchinski
Kentucky American Water
2300 Richmond Rd
Lexington, KY 40502
859-268-6321 (office)
859-361-1770 (cell)
859-268-6395 (fax)

Northern Division Connection DOW Construction Permit

Jason M Hurt to: Lance E Williams 02/17/2012 11:25 AM

The approval letter and plans were received today.

Thanks,

Jason M. Hurt, PE
Sr. Project Engineer
Kentucky American Water
2300 Richmond Road
Lexington, KY 40502
T 859.335.3415
F 859.335.3393
Jason.Hurt@amwater.com

KENTUCKY
AMERICAN WATER

Kentucky American Water
Northern Division
102 North Main St
Owenton, KY 40359
www.kawc.com

P 502.484.5118

November 11, 2011

Ms. Catherine Haven
Kentucky Division of Water
8020 Veterans Memorial Dr Ste 110
Florence, KY 41042

Dear Ms. Catherine Haven:

I am writing in response to the routine surface inspection at the Owenton Water Treatment Plant on September 8, 2011. We have implemented a number of changes in which I hope you find sufficient. We take compliance very seriously at Kentucky American and I am very willing to work with you to resolve any potential issues.

The leak in the pipe gallery has been addressed with a repair clamp and the pipe is no longer leaking on to the floor. The sulfuric acid, which was stored outside, is now stored within the walls of the plant. One drum is fed outside and secured on a containment structure. A formalized procedure has been put in place to address any backwash issues. As part of the procedure, the plant supervisor inspects the basin quarterly and transfers sludge out as needed to prevent any compliance issues. We also installed a series of straw bales and sediment fence near the discharge pipe to further reduce the risk of any stream degradation.

Again, we take compliance issues very seriously and I want to work with you to address any concerns you may have regarding the water and wastewater systems within our Northern Division. I have copies of the procedures, as well as pictures of the repairs in my office if you would need to verify the corrections. Please let me know and I can mail or email additional information.

Thank you,

Kevin Kruchinski
Operations Superintendent
Kentucky American Water

KENTUCKY
AMERICAN WATER

Kentucky American Water
102 N Main St
Owenton, KY 40359
www.amwater.com

P 859-361-1770
F 502-484-1265

12/05/2008

Mayor David Wotier
220 S Main St
Owenton KY 40359

Re: Severn Creek Intake Project

Dear Mayor Wotier,

Per our discussion, we have several outstanding issues requiring completion at the Severn Creek Intake facility.

- SCADA/telemetry installation and completion (intake, repeater site, water plant)
- Correct and proper installation of the antenna mast located at the water plant
- Intake well level indication needs repair
- Additional computer programming associated with the PLC at Severn Creek
- Painting of metal piping associated with the pre-lube system
- Proper installation of roof hatches on the intake

Kentucky American Water has paid additional costs due to the incompletion of phase I of this project. The items listed above are not all inclusive of all work requiring completion, but only those items immediately resulting in additional costs and or problems to Kentucky American Water.

Thank you,

Kevin Kruchinski
Kentucky American Water

KENTUCKY
AMERICAN WATER

Kentucky American Water
102 North Main St
Owenton, KY 40359
www.kentuckyamwater.com

P 859-361-1770
F 502-484-1265

MEMORANDUM

To: Dillard Griffin

From: Kevin Kruchinski

CC: Rick Buchanan

Date: 3/23/09

Re: Owenton Water Treatment Plant Residuals

The Owenton Water Plant's discharge could potentially face compliance issues due to an accumulation of solids within our wash-water settling basin. In addition, due to the accumulation of solids we may encounter questions or problems with future site inspections at our Northern District water plant. Multiple options exist, but I am in favor of relocating the residuals on site until long-term plans for the facility are determined.

Background

KAW's Northern District water plant is designed to allow all filter wash water, claricone grit, and sludge blanket thinning to be piped to the old water plant sedimentation basin. The process is designed so the solids/residuals will sink to the bottom and the supernatant will be released to an adjacent stream. This design did not take into account that the basin would eventually fill up with solids. An appropriate or legal means of discharge was never developed or implemented into the current design. Monthly, we sample this discharge and monitor total suspended solids, chlorine, and pH. Due to the accumulation of solids within the basin, we may begin to see elevated total suspended solids because of decreased settling time. However, we have not seen any negative impact from the increasing levels of solids within the basin.

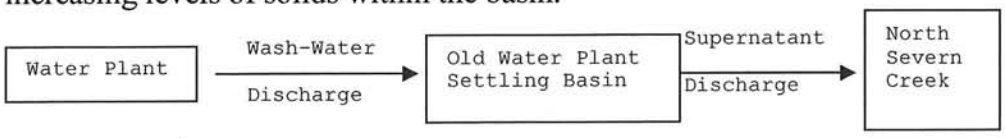

The settling basin has a design capacity of approximately 115,000 gallons and we are around 20-25% full. H&A estimated we are currently storing 125 cubic yards of dewatered solids within the basin. From monthly observations, I believe our basin is filling at a rate of approximately 10-20% per year, entirely dependant upon turbidity levels within the raw water source and chemical dosages within the plant.

Prior to KAW's purchase of the facilities, different process were in place to prevent sludge accumulation within the settling basin. Upon KAW's purchase of the facilities, past processes of sludge disposal were no longer acceptable. The appearance of a solids problem is visibly apparent and is likely to be noted on future site inspections by PSC and DOW inspectors. We do have several options available for disposal of the residuals with varying levels of difficulty and expense. Our main obstacle is the location of the facility with its limited access and disposal of the actual dewatered residuals product.

Options

We have the opportunity to relocate the liquid residuals from one basin to another basin on the current property. We could rent a small pump capable of agitating and pumping the slurry approximately 50 feet. This may prove to be the most economical but it is not a long-term solution on its own, as the second basin will eventually reach capacity with solids. However, since long-term plans for the future of the current facility are in jeopardy, this option appears most feasible. Should the current water plant be taken out of service in 3-5 years, we could seal off the top of the basin upon decommissioning the plant and our problem would be solved. Should we continue to operate the plant long-term, purchasing and installing a sludge residuals process would be required and at that time we could treat the sludge residuals.

I have discussed with Hall & Associates, a process very similar in nature to what we do at our Richmond Road Plant in Lexington. The H&A would pump out our sedimentation basin, press the water from the residuals and then land apply the dewatered solids. One option is loading the residuals into dumpsters and land filling for an additional expense. Currently, KAW does not own any land typically capable of qualifying for land application. If KAW were capable of land applying the dewatered residuals, H&A's services would cost approximately $18,500 with additional unknown costs associated with providing electrical services and road improvements.

An additional option could be hauling the residuals in liquid form to our wastewater plant drying beds. Our drying beds have the capacity to hold the liquid but again we will need to do something with the dried residuals. Our own Water Quality staff will need to investigate any required permitting associated with handling our residuals in this manner. Costs associated with hauling the material in liquid form have not been fully investigated at this time. Due to limited access, tanker trucks will need to be very small (short wheel base truck) or a pumping system will be required to complete this process. The process of hauling the liquid residual could potentially become equally as expensive at the prior option. One final variation of this option would be to haul the liquid residuals to the new KRS II treatment facility and press the residuals there upon its startup.

Form WO-INVEST-A
1/05/00

KENTUCKY-AMERICAN WATER COMPANY
INVESTMENT TASK ORDER

$ 6,890

Descriptive Title: Owenton Raw Water Check Valve Replacement

Purpose: Replace a broken check valve

Budget Line Item No: 1232 Q

Cash Forecast:

Contractor:	Herrick Company, Inc	Municipality:	Owenton
Does the proposed work replace any company owned property?	Yes	Related Retirement	

Cost Detail	Work Order: Job Number: Item:						Project Total
Permits	105125.31						-
Easements	105125.11						-
Legal	105175.31						-
Transf Expend	105110.31						-
Materials	105150.31	4,158					4,158
O&C	105150.31	356	-	-	-	-	356
Co Labor	105200.31	-	-	-	-	-	-
Grp Ins/401K	105250.31	-	-	-	-	-	-
Other OH	105250.31	-	-	-	-	-	-
P/R Tax OH	105250.31	-	-	-	-	-	-
OH-Infrastructure	105260.21	594	-	-	-	-	594
Contract Labor	105275.31	1,782					1,782
AFUDC Debt	105350.31	-	-	-	-	-	-
AFUDC Equity	105375.31	-	-	-	-	-	-
Other	105150.31						-
Design	105900.31						-
Subtotal excl O&C and OH-Infra		5,940	-	-	-	-	5,940
Subtotal incl O&C		6,296	-	-	-	-	6,296
Totals		$ 6,890	$ -	$ -	$ -	$ -	$ 6,890

COMPLETION

Date Field Work Started

	Date	Project Mgr	Date Submitted	Date UPIS
In Service (Code 99 in JDE)				
Completed				

Completed Amount $_____
Variance $_____ _____%

Attach JDE task order cost analysis. If project variance exceeds $1,000 AND 10% of estimate, make revisions before closing the task order (and attach explanation).

Form WO-INVEST-A
1/05/00

KENTUCKY-AMERICAN WATER COMPANY
INVESTMENT TASK ORDER

$ 7,540

Descriptive Title: Owenton Low Service Pump Rebuild

Purpose: Replace the shafts, bearings, and coupling.

Budget Line Item No: 1232 Q

Cash Forecast:

Contractor:	Reynolds	Municipality:	Owenton
Does the proposed work replace any company owned property?	No	Related Retirement	

Cost Detail	Work Order: Job Number: Item:						Project Total
Permits	105125.31						-
Easements	105125.11						-
Legal	105175.31						-
Transf Expend	105110.31						-
Materials	105150.31	5,500					5,500
O&C	105150.31	390	-	-	-	-	390
Co Labor	105200.31	-	-	-	-	-	-
Grp Ins/401K	105250.31	-	-	-	-	-	-
Other OH	105250.31	-	-	-	-	-	-
P/R Tax OH	105250.31	-	-	-	-	-	-
OH-Infrastructure	105260.21	650	-	-	-	-	650
Contract Labor	105275.31	1,000					1,000
AFUDC Debt	105350.31	-	-	-	-	-	-
AFUDC Equity	105375.31	-	-	-	-	-	-
Other	105150.31						-
Design	105900.31						-
Subtotal excl O&C and OH-Infra		6,500	-	-	-	-	6,500
Subtotal incl O&C		6,890	-	-	-	-	6,890
Totals		$ 7,540	$ -	$ -	$ -	$ -	$ 7,540

COMPLETION

Date Field Work Started

	Date	Project Mgr	Date Submitted	Date UPIS
In Service (Code 99 in JDE)				
Completed				

Completed Amount $_____
Variance $_____ _____%

Attach JDE task order cost analysis. If project variance exceeds $1,000 AND 10% of estimate, make revisions before closing the task order (and attach explanation).

Form WO-INVEST-A
1/05/00

KENTUCKY-AMERICAN WATER COMPANY
INVESTMENT TASK ORDER

$ 5,882

Descriptive Title: Fence around old Owenton water plant

Purpose: Provide additional security and limit access to our sludge handling areas at the Owenton water plant.

Budget Line Item No: 1232 Q

Cash Forecast:

Contractor: Rio Grande Fence | Municipality: Owenton

Does the proposed work replace any company owned property? No | Related Retirement

Cost Detail	Work Order: Job Number: Item:						Project Total
Permits	105125.31						-
Easements	105125.11						-
Legal	105175.31						-
Transf Expend	105110.31						-
Materials	105150.31	3,527					3,527
O&C	105150.31	304	-	-	-	-	304
Co Labor	105200.31	-	-	-	-	-	-
Grp Ins/401K	105250.31	-	-	-	-	-	-
Other OH	105250.31	-	-	-	-	-	-
P/R Tax OH	105250.31	-	-	-	-	-	-
OH-Infrastructure	105260.21	507	-	-	-	-	507
Contract Labor	105275.31	1,544					1,544
AFUDC Debt	105350.31	-	-	-	-	-	-
AFUDC Equity	105375.31	-	-	-	-	-	-
Other	105150.31						-
Design	105900.31						-
Subtotal excl O&C and OH-Infra		5,071	-	-	-	-	5,071
Subtotal incl O&C		5,375	-	-	-	-	5,375
Totals		$ 5,882	$ -	$ -	$ -	$ -	$ 5,882

COMPLETION

Date Field Work Started

	Date	Project Mgr	Date Submitted	Date UPIS
In Service (Code 99 in JDE)				
Completed				

Completed Amount $_____
Variance $_____ _____%

Attach JDE task order cost analysis. If project variance exceeds $1,000 AND 10% of estimate, make revisions before closing the task order (and attach explanation).

Form WO-INVEST-A
1/05/00

KENTUCKY-AMERICAN WATER COMPANY
INVESTMENT TASK ORDER

$ 13,070

Descriptive Title: Severn Creek Variable Frequency Drive

Purpose: Replace the failed variable frequency drive

Budget Line Item No: 1232 Q

Cash Forecast:

Contractor:	Air Equipment Company					Municipality:	Owenton
Does the proposed work replace any company owned property?					Yes	Related Retirement	

Cost Detail	Work Order: Job Number: Item:						Project Total
Permits	105125.31						-
Easements	105125.11						-
Legal	105175.31						-
Transf Expend	105110.31						-
Materials	105150.31	9,304					9,304
O&C	105150.31	679	-	-	-	-	679
Co Labor	105200.31	1,000	-	-	-	-	1,000
Grp Ins/401K	105250.31	15	-	-	-	-	15
Other OH	105250.31	413	-	-	-	-	413
P/R Tax OH	105250.31	79	-	-	-	-	79
OH-Infrastructure	105260.21	1,080	-	-	-	-	1,080
Contract Labor	105275.31	500					500
AFUDC Debt	105350.31	-	-	-	-	-	-
AFUDC Equity	105375.31	-	-	-	-	-	-
Other	105150.31						-
Design	105900.31						-
Subtotal excl O&C and OH-Infra		11,311	-	-	-	-	11,311
Subtotal incl O&C		11,989	-	-	-	-	11,989
Totals		$ 13,070	$ -	$ -	$ -	$ -	$ 13,070

COMPLETION

Date Field Work Started

	Date	Project Mgr	Date Submitted	Date UPIS
In Service (Code 99 in JDE)				
Completed				

Completed Amount $_____
Variance $_____ _____%

Attach JDE task order cost analysis. If project variance exceeds $1,000 AND 10% of estimate, make revisions before closing the task order (and attach explanation).

Form WO-INVEST-A
1/05/00

KENTUCKY-AMERICAN WATER COMPANY
INVESTMENT TASK ORDER

$ 6,728

Descriptive Title: Automated Valve Replacement at Owenton WTP

Purpose: The automated valves on the claricone at the water plant in Owenton no longer function. This creates a safety hazard for the operators at the plant as well as treatment difficulties.

Budget Line Item No:

Cash Forecast:

Contractor:	Service Specialties	Municipality:	Owenton
Does the proposed work replace any company owned property?	No	Related Retirement	

Cost Detail	Work Order: Job Number: Item:	Keystone Valves					Project Total
Permits	105125.31						-
Easements	105125.11						-
Legal	105175.31						-
Transf Expend	105110.31						-
Materials	105150.31	3,800					3,800
O&C	105150.31	348	-	-	-	-	348
Co Labor	105200.31	-	-	-	-	-	-
Grp Ins/401K	105250.31	-	-	-	-	-	-
Other OH	105250.31	-	-	-	-	-	-
P/R Tax OH	105250.31	-	-	-	-	-	-
OH-Infrastructure	105260.21	580	-	-	-	-	580
Contract Labor	105275.31	2,000					2,000
AFUDC Debt	105350.31	-	-	-	-	-	-
AFUDC Equity	105375.31	-	-	-	-	-	-
Other	105150.31						-
Design	105900.31						-
Subtotal excl O&C and OH-Infra		5,800	-	-	-	-	5,800
Subtotal incl O&C		6,148	-	-	-	-	6,148
Totals		$ 6,728	$ -	$ -	$ -	$ -	$ 6,728

COMPLETION

Date Field Work Started

	Date	Project Mgr	Date Submitted	Date UPIS
In Service (Code 99 in JDE)				
Completed				

Completed Amount $_____

Variance $_____ _____%

Attach JDE task order cost analysis. If project variance exceeds $1,000 AND 10% of estimate, make revisions before closing the task order (and attach explanation).

Form WO-INVEST-A
1/05/00

KENTUCKY-AMERICAN WATER COMPANY
INVESTMENT TASK ORDER

430250
$ 4,136

Descriptive Title: Install Automatic Valve in Claricone Drain Line

Purpose: Due to safety, efficiency, and water quality reasons, an automatic valve operator is needed claricone drain line.

Budget Line Item No: RP-1232-Q1

Cash Forecast:

Contractor:	Service Specialty	Municipality:	Owenton
Does the proposed work replace any company owned property?	No	Related Retirement	

	Item:	Auto Valve					Project Total
Permits	105125.31						-
Easements	105125.11						-
Legal	105175.31						-
Transf Expend	105110.31						-
Materials	105150.31	1,748					1,748
O&C	105150.31	215	-	-	-	-	215
Co Labor	105200.31	250	-	-	-	-	250
Grp Ins/401K	105250.31	4	-	-	-	-	4
Other OH	105250.31	103	-	-	-	-	103
P/R Tax OH	105250.31	20	-	-	-	-	20
OH-Infrastructure	105260.21	345	-	-	-	-	345
Contract Labor	105275.31	1,452					1,452
AFUDC Debt	105350.31	-	-	-	-	-	-
AFUDC Equity	105375.31	-	-	-	-	-	-
Other	105150.31						-
Design	105900.31						-
Subtotal excl O&C and OH-Infra		3,577	-	-	-	-	3,577
Subtotal incl O&C		3,791	-	-	-	-	3,791
Totals		$ 4,136	$ -	$ -	$ -	$ -	$ 4,136

COMPLETION

Date Field Work Started

	Date	Project Mgr	Date Submitted	Date UPIS
In Service (Code 99 in JDE)				
Completed				

Completed Amount $_____
Variance $_____ _____%

Attach JDE task order cost analysis. If project variance exceeds $1,000 AND 10% of estimate, make revisions before closing the task order (and attach explanation).

Form WO-INVEST-A
1/05/00

KENTUCKY-AMERICAN WATER COMPANY
INVESTMENT TASK ORDER

$ 6,998

Descriptive Title: Water Plant Chemical Feed Pumps and Containment

Purpose: Owenton Water Plant does not have any spare or redundant chemical feed pumps. All chemicals are fed on an individual pump.

Budget Line Item No:

Cash Forecast:

Contractor:	Direct purchase from Cole Parmer	Municipality:	Owenton
Does the proposed work replace any company owned property?	No	Related Retirement	

Cost Detail	Work Order: Job Number: Item:	Fluoride	Ferric	Caustic	Permanganate	Containment	Project Total
Permits	105125.31						-
Easements	105125.11						-
Legal	105175.31						-
Transf Expend	105110.31						-
Materials	105150.31	1,275	2,000	2,000	465	500	6,240
O&C	105150.31	81	125	125	32	35	397
Co Labor	105200.31	50	50	50	50	50	250
Grp Ins/401K	105250.31	1	1	1	1	1	4
Other OH	105250.31	21	21	21	21	21	103
P/R Tax OH	105250.31	4	4	4	4	4	20
OH-Infrastructure	105260.21	133	205	205	52	55	649
Contract Labor	105275.31	-					-
AFUDC Debt	105350.31	-	-	-	-	-	-
AFUDC Equity	105375.31	-	-	-	-	-	-
Other	105150.31						-
Design	105900.31						-
Subtotal excl O&C and OH-Infra		1,350	2,075	2,075	540	575	6,617
Subtotal incl O&C		1,431	2,200	2,200	573	610	7,014
Totals		$ 1,564	$ 2,405	$ 2,405	$ 624	$ 665	$ 6,998

COMPLETION

Date Field Work Started

	Date	Project Mgr	Date Submitted	Date UPIS
In Service (Code 99 in JDE)				
Completed				

Completed Amount $_____
Variance $_____ _____%

Attach JDE task order cost analysis. If project variance exceeds $1,000 AND 10% of estimate, make revisions before closing the task order (and attach explanation).

Form WO-INVEST-A
1/05/00

KENTUCKY-AMERICAN WATER COMPANY
INVESTMENT TASK ORDER

$ 3,971

Descriptive Title:
Water Plant Office Furniture

Purpose:
The water plant requires a professional looking office space. The existing furniture is worn and looks poorly upon our operation. The maintenace position is now working out of the water plant, thus additional desk and file space is required.

Budget Line Item No:

Cash Forecast:

Contractor:	Direct purchase from Office Max	Municipality:	Owenton
Does the proposed work replace any company owned property?	No	Related Retirement	

Cost Detail	Work Order: Job Number: Item:	Office Furniture					Project Total
Permits	105125.31						-
Easements	105125.11						-
Legal	105175.31						-
Transf Expend	105110.31						-
Materials	105150.31	3,350					3,350
O&C	105150.31	206	-	-	-	-	206
Co Labor	105200.31	50	-	-	-	-	50
Grp Ins/401K	105250.31	1	-	-	-	-	1
Other OH	105250.31	21	-	-	-	-	21
P/R Tax OH	105250.31	4	-	-	-	-	4
OH-Infrastructure	105260.21	340	-	-	-	-	340
Contract Labor	105275.31						-
AFUDC Debt	105350.31	-	-	-	-	-	-
AFUDC Equity	105375.31	-	-	-	-	-	-
Other	105150.31						-
Design	105900.31						-
Subtotal excl O&C and OH-Infra		3,425	-	-	-	-	3,425
Subtotal incl O&C		3,631	-	-	-	-	3,631
Totals		$ 3,971	$ -	$ -	$ -	$ -	$ 3,971

COMPLETION

Date Field Work Started

	Date	Project Mgr	Date Submitted	Date UPIS
In Service (Code 99 in JDE)				
Completed				

Completed Amount $_____
Variance $_____ _____%

Attach JDE task order cost analysis. If project variance exceeds $1,000 AND 10% of estimate, make revisions before closing the task order (and attach explanation).

Root Cause Assessment

OPPORTUNITY/PROBLEM TO BE ADDRESSED: Owenton WTP Treatment Failure **DATE: 12/27/11** **TEAM** – Kruchinski, Krug, Brooks, Bridwell, Shehee, Moler, Clifton, Olson

Standard: What is our process? OR What would be the ideal state?
All employees operate plant in a consistent / standard manner within full compliance of all environmental regulations meeting system demand at all times.

Current Situation:
All operators are operating in an inconsistent manner. Treatment mishaps are common but typically handled before they become compliance issues. Numerous capital improvements or alternatives are needed due to an insufficient plant design. Communication is not always transparent through the department.

GAP:
Procedures are lacking or unclear. Plant has minimal redundancy. Day-to-day oversight has lacked in the past. Lack of documentation.

Detail the Current Situation – Be specific: Ask What, When, Where, and How Often
Severe treatment failure on 12/6/11 without a defined cause. It took nearly 8 hours to regain treatment.

Compelling Reason to Find a Resolution:
Customer satisfaction is dependant upon adequate quality and quantity as well

Clarify the Problem – What will happen if we choose not to take action?
Customers without water. Widespread boil water. Potential NOVs. Poor customer satisfaction.

PROBLEM SOLVING PROCESS – ASK WHY 4 TIMES AND THINK IN TERMS OF THE 4Ms & 1E
Man(People) – Method(Process) – Material(Resources) – Machine(Mechanics) – Environment
Potential Causes:
Loss of coagulant feed. Possibly leading to too much coagulant feed. possible junk in tanks, never been cleaned, limited capacity. Further investigation did not reveal any feed problems.

Severity was impacted by inability to properly communicate the problem. Didn't have all the call out numbers.

Lack of coagulant adjustment from previous shift. Spoke with the operator, Marty Olson, and no adjustment was made due to the operator believing he was already overfeeding coagulant (further review revealed the plant was under feeding).

Not enough sludge blanket due to too much removal. Spoke with operator, David Clifton, and he blew off the sludge per his understanding of the procedure (further review revealed he blew off too much sludge and he wasn't grasping the procedure).

Limited basin capacity Poor plant design. Lack of capital dollars.

New formal written procedure and lack of training. Failure to follow new procedure correctly. To make operation more consistent.

Limited redundancy. Plant was approved without it. Limited storage capacity.

Most Likely Cause at this time:
Improper coagulant feed based upon changing source water and settled water, compounded with a limited sludge blanket, compounded by an inability to deliver relevant information. We have also determined that the old procedure had numerous problems which was the primary driver in not being able to recover treatment.

Problem Statement:
Plant treatment upset as a result of operators not completely responding to changing source water conditions and the operator improperly following a new procedure.

Measurable Goal(s) Relative to the Problem Statement

No future treatment upsets based upon these issues.

Potential Solutions or Countermeasures
1. Finalized procedures
2. Additional training on procedures
3. New log sheet with SCM column
4. Updated phone list of key contacts (home / cell)
5. Decommission treatment facility
6. Capital improvements
7. Additional redundancy

Selected Potential Solution or Countermeasure
Numbers 1 – 4 above.

Activity	Responsible Person	Due Date	Notes
Finalize SOP	Dalvin Krug	01/03/12	Complete- Draft procedure
Provide training on SOP	Dalvin Krug	01/10/12	Complete
WQ physically on site every other week	David Shehee Dottie Johnson	Immediate	Complete / On-going
Weekly 1 on 1 meeting with Operators	Dalvin Krug	Immediate	Complete / On-going
Improve log sheet	Dalvin Krug	01/10/12	Complete- Train as necessary on the new sheet. Include SCM readings on sheet. 2 hour readings on critical information.
Create call list	Dalvin Krug	12/15/11	Complete

Follow Up Check Box
How will We/I check:

When will We/I check:

Recommended Action:

"Parker, Tobias" <Tobias.Parker@strand.com >

07/09/2008 05:27 PM

To <Jason.Hurt@amwater.com>
cc "Keil, Chris" <Chris.Keil@strand.com>
bcc
Subject Owenton WTP - PAC Evaluation Letter

History: This message has been replied to.

Jason,

I've attached the Powder Activated Carbon Feed System Evaluation Letter. Please review and I would like to discuss with you at your earliest convenience. A hard copy of this letter is also being sent by post.

-Tobias PAC Evaluation.pdf

STRAND ASSOCIATES, INC.®
ENGINEERS

Waterfront Plaza
Suite 710
325 West Main Street
Louisville, KY 40202
Phone: 502-583-7020
Fax: 502-583-7026

Office Locations

Madison, WI
Joliet, IL
Louisville, KY
Lexington, KY
Mobile, AL
Columbus, IN
Columbus, OH
Indianapolis, IN
Milwaukee, WI
Cincinnati, OH

www.strand.com

July 9, 2008

Jason Hurt, P.E., Project Manager
Kentucky American Water
2300 Richmond Road
Lexington, KY 40502

Re: Powder Activated Carbon Feed System Evaluation

Dear Jason,

Kentucky American Water (KAW) expressed an interest in improving the existing Powder Activated Carbon (PAC) feed system by reducing the amount of dust and the physical burden of lifting and dumping 40-lb bags of PAC into the hopper. To address such concerns, we conducted an evaluation to determine the options for feeding PAC into the system. This letter presents our findings.

Historical PAC Feed Rates

The KAW operators indicated that normal water treatment operational procedure is to pump raw water directly from Severn Creek to the treatment plant. Carbon addition is normally not required when pumping from Severn Creek. Reservoir water is only pumped when Severn Creek water quality is impaired such as after a rain event when high solids are washed into the river, or when the Severn Creek water level is low because of lack of rain. Carbon is added to the reservoir water to reduce taste and odor and disinfection by-product formation. Table 1 is a summary of the carbon feed data from 2004 to 2007.

	Carbon Usage (lbs)							
	2004		2005		2006		2007	
	Average	Maximum	Average	Maximum	Average	Maximum	Average	Maximum
Daily	28	47	44	80	25	35	68	103
Monthly	846	1,412	1,335	2,403	745	1,054	2,030	3,083
Annual Total	4,323		5,338		3,473		20,302	

Table 1 Carbon Addition from 2004 to 2007

In 2004, 2005, and 2006, carbon was added less than 50 percent of the year during the rainy months. In 2007, the Owenton Water Treatment Plant used over 20,000 pounds of PAC, which was more the amount added in 2004, 2005, and 2006 combined. The operators indicated that 2007 was an especially dry year. Raw water was pumped from the reservoir from April through December because of Severn Creek's low water level.

The average daily carbon fed from 2004 to 2007 ranged from 25 to 68 pounds per day (one to two 40-lb bags of carbon). The maximum daily average from 2004 to 2007 ranged from 35 to 103 pounds per day (one to three 40-lb bags of carbon).

Existing PAC Feed System

The existing PAC feed system is an Acrison Model W105X-D/2 Feeder. According to Acrison, this system is designed for PAC feed rates of 0.3 to 101 cubic feet per hour. The existing model PAC feed system was installed with a Donaldson Torit Cabinet Dust Collector. Based on conversations with the manufacturer, the dust collector should be sufficient in reducing dust from dumping PAC into the hopper provided the equipment is working properly.

According to the water treatment plant operators, the majority of the dust occurs when dumping carbon into the hopper. Discussions with the operators indicate that when the PAC feed system first began, the dust collector was used and it appeared to reduce dust. However, after years of use, the dust collector system no longer reduced dust formation. Currently, the dust collector is not operated when dumping carbon into the hopper.

Strand discussed the observations of the operator with Acrison. Acrison suggested that the Torit Dust Collector needs servicing. According to the operation and maintenance manual of the Torit Dust Collector (enclosed), routine maintenance includes changing a bag filter.

Available PAC Feed Systems

PAC feed systems for the municipal market generally are composed of a dry chemical hopper to receive carbon, a volumetric feeder with a mixer or auger to control the rate of carbon addition, and a fluidizing device or tank to combine the dry carbon and water. Additional miscellaneous equipment may include a liquid pump to transfer the carbon/water mixture, an eductor to control water flow, a dust collector to reduce carbon dust, and a hoist to lift large carbon bags to facilitate the dumping of carbon into the hopper.

Information was requested from manufacturers regarding the options of preventing carbon dust formation and lessening the physical burden of lifting the 40-lb carbon bags into the hopper. They indicated that dust associated with PAC addition is from two sources: dust from the discarded, empty PAC bags; and dust from dumping the PAC into the hopper. Most PAC feed systems and the existing system have a vacuum that draws in carbon dust. Dust from discarded bags can be reduced by proper operation and maintenance procedures.

STRAND ASSOCIATES, INC.® ENGINEERS

In addition, the carbon feed manufacturers said that a hoist system can be provided to lift large sacks of carbon into the hopper. However, use of this system requires the operator to move the large carbon sacks horizontally into position for lifting with the hoist.

Acrison can provide a bulk bag (up to 2,000 pounds) unloading feed system equipped with a W105Z Volumetric Feeder and 50-gallon dissolving tank for $106,000. However, this system would require the construction of a larger room with minimum room dimensions of 12 feet x 16 feet and a minimum ceiling height of 18.5 feet. Additional space would also be required to store carbon.

Summary

Based on the existing carbon feed rates (one to three 40-lb bags of carbon per day) and the cost of installing a new system, we suggest that KAW repair the existing carbon dust collection system and continue to use the existing carbon feed system. Additional equipment to ease lifting and loading of the bags could be purchased as well.

If you have any questions or concerns regarding the information in this letter, please feel free to give me a call.

Sincerely,

STRAND ASSOCIATES, INC.

Tobias J. Parker, P.E.

Enclosure(s)

c/enc.: Chris Keil, P.E.
Brian Hackman, P.E.

Donaldson
Torit

Installation and Operation Manual

Installation, Operation, and Service Information

Cabinet Dust Collector Series 50, 60, 70, and 80

Models 54, 64, 66, 75, 81, and 84

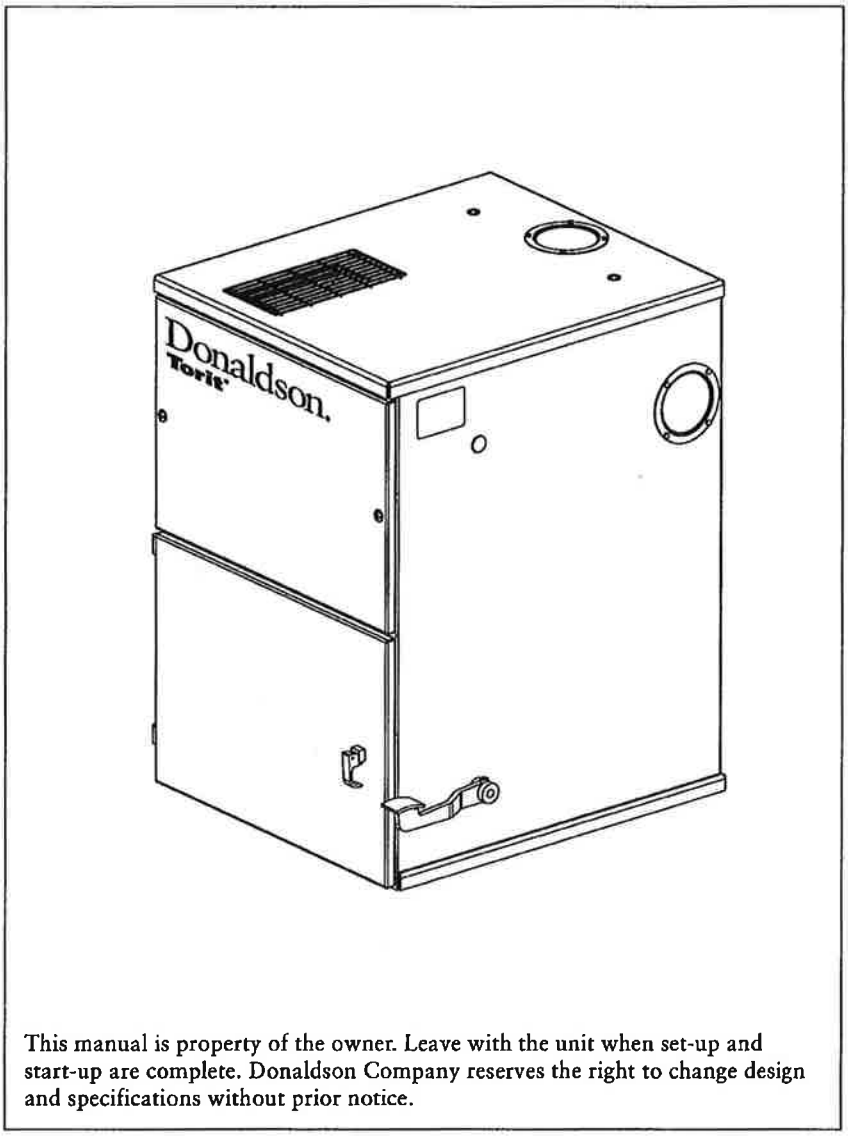

This manual is property of the owner. Leave with the unit when set-up and start-up are complete. Donaldson Company reserves the right to change design and specifications without prior notice.

Throughout this manual statements indicating precautions necessary *to avoid equipment failure* are referenced in a **Note.** Statements indicating potential hazards that could result in *personal injury or property damage* are referenced in a **Caution!** box.

IOM-75094-01
Revision 4

Caution!

Application of Dust Control Equipment

- Combustible materials such as buffing lint, paper, wood, aluminum or steel dust, weld fume, or flammable solvents represent fire or explosion hazards. Use special care when selecting and operating all dust or fume collection equipment when combustible materials are present to protect workers and property from damage due to fire and/or explosion. Consult and comply with National and Local Codes relating to fire or explosion and all other appropriate codes when determining the location and operation of dust or fume collection equipment.
- When combustible materials are present, consult with an installer of fire extinguishing systems familiar with these types of fire hazards and local fire codes for recommendations and installation of fire extinguishing and explosion protection systems. Donaldson dust collection equipment is not equipped with fire extinguishing or explosion protection systems.
- DO NOT allow sparks, cigarettes or other burning objects to enter the hood or duct of any dust or fume control equipment as these may initiate a fire or explosion.
- For optimum collector performance, use only Donaldson replacement parts.

Warning – Improper operation of a dust control system may contribute to conditions in the work area or facility that could result in severe personal injury and product or property damage. Check that all collection equipment is properly selected and sized for the intended use.

Contents

Description 4
Purpose and Intended Use 4
Operation 5
Inspection on Arrival 6
Installation Codes and Procedures 6
Installation 6
  Site Selection, Grade-Mounted Units 6
  Unit Location 6
Electrical Wiring 7
Rigging Instructions 7
  Hoisting Information 7
Typical Installation 8
Standard Equipment 9
Optional Equipment 9
  Hopper 9
  Hopper Attachments 11
  Indoor Exhaust Deflector 12
  Outdoor Exhaust Deflector 13
  Ductwork 14
  Suction Tube Assembly 14
  Magnehelic® Gauge 16
  Outrigger Pack 18
  HEPA Filter 19
  Exhaust Silencer 21
  Attenuator 22
  Chamber Silencer 23
  Automatic Shaker 23
Preliminary Start-Up Check 26
Start-Up 26
Service Information 27
  EZ Filter Pack™ Installation 27
  Dust Disposal 29
Troubleshooting 30
Service Notes 33
Warranty 36

This manual contains specific precautionary statements relative to worker safety. Read thoroughly and comply as directed. Discuss the use and application of this equipment with a Donaldson representative. Instruct all personnel on safe use and maintenance procedures.

Magnehelic® is a registered trademark of Dwyer Instruments, Inc.

Data Sheet

Model Number _____ **Serial Number** _____

Ship Date _____ **Installation Date** _____

Customer Name _____

Address _____

_____

Filter Type _____

Accessories _____

Other _____

Description

Cabinet Series 50 to 80 dust collectors are self-contained, intermittent-duty collectors with envelope-style filters. Using the EZ Filter Pack™ filter system, Cabinet series collectors provide highly efficient, low maintenance air cleaning. Filters are cleaned using the standard manual filter shaker or an optional motorized filter shaker which cleans the filters automatically each time the unit is turned off. The EZ Filter Pack is designed for quick, easy filter replacement without the use of special tools.

Designed to increase the versatility of the unit, standard options include a hopper package for a 5-gallon pail or 55-gallon drum, indoor and outdoor exhaust deflectors, HEPA filter packs, and exhaust silencers. Four filter media choices and three construction options are among the many options available to customize the unit to the specific application.

Caution!

- Misuse or modification of this equipment may result in personal injury.
- Do not misuse or modify.

Purpose and Intended Use

Cabinet collectors provide excellent efficiency on nuisance dust generated in industrial operations and are a good choice for low airflow, light-load applications that do not require continuous airflow. Typical applications include grinding, buffing and polishing, abrasive blasting, batch mixing, and bag dumping. Often, individual Cabinet collectors are dedicated to one or two machines.

Four filter media selections offer a wide variety of characteristics: cotton sateen is the standard media and provides good efficiency in applications up to 180° F; polyester sateen provides the same efficiency, but has higher temperature resistance (240° F) and is more abrasion-resistant; woven polyester provides better dust release capabilities with lower efficiency; and polypropylene provides some chemical resistance up to 180° F.

Standard galvanized construction includes galvanized metal support bars, slide latches, bag clips, and hardware to support most applications.

Optional stainless-steel construction is tailored to corrosive environments. This option includes stainless steel clips and screws if the screws protrude into the dirty-air chamber. Slide latches, support bars, and other hardware located in the clean-air chamber remain galvanized steel.

Grounded, non-spark construction includes the standard frame and polyester sateen filter media, an additional stainless steel wire-mesh insert, stainless-steel bag clips, and ground wires.

Operation

During normal operation, dust-laden air enters the unit through the dirty-air inlet and passes through the unit where the dust collects on the outside surface of the filter media. As dust collects on the filter surfaces, a dust cake forms, which actually improves the efficiency of the filters. The greater the amount of dust cake accumulated, the higher the efficiency of the filter.

The filtered air flows up through the center of the filters and into the clean-air chamber. Clean, filtered air discharges through clean-air outlet located on top of the unit.

Pushing down on the hand- or foot-operated shaker pedal and releasing rapidly six times completes manual filter cleaning. The releasing action causes the dust cake to fracture and fall into the dust storage area. Motorized filter shakers are optional and automatically clean the filters each time the unit is turned off.

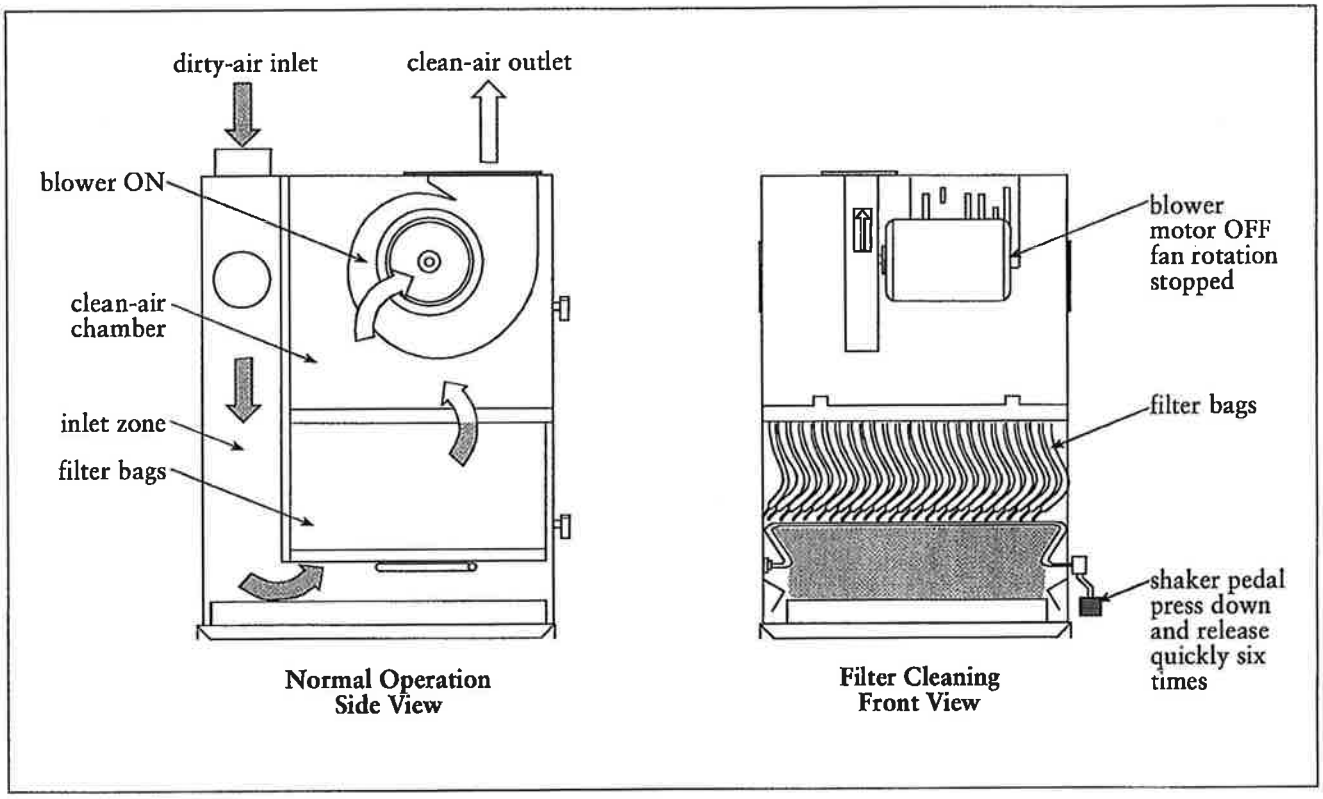

Unit Operation

Inspection on Arrival

1. Inspect unit on delivery.
2. Report any damage to the delivery carrier.
3. Request a written inspection report from the Claims Inspector to substantiate claim.
4. File claims with the delivery carrier.
5. Compare unit received with description of product ordered.
6. Report incomplete shipments to the delivery carrier and your Donaldson representative.
7. Remove crates and shipping straps. Remove loose components and accessory packages before lifting unit from truck.

Installation Codes and Procedures

Caution!

OSHA may have requirements regarding recirculating filtered air in your facility. Consult with the appropriate local authorities to ensure compliance with all codes regarding recirculating filtered air.

1. Safe and efficient operation of the unit depends on proper installation.
2. Authorities with jurisdiction should be consulted before installing to verify local codes and installation procedures. In the absence of such codes, install unit according to the National Electric Code, NFPA No. 70-latest edition.
3. A qualified installation and service agent must complete installation and service of this equipment.

Installation

Site Selection, Grade-Mounted Units

1. The unit can be located on a reinforced concrete foundation or rooftop.
2. Wind, seismic zone, and other live-load conditions must be considered when selecting the location for rooftop-mounted units.
3. Provide clearance from heat sources and interference with utilities when selecting the location for suspended units.
4. Portable units require no special installation accommodations.

Unit Location

1. When hazardous conditions or materials are present, consult with local authorities for the proper location of the collector.
2. Foundation or roof support must be capable of supporting the entire weight of the unit, plus the weight of the collected material, piping, and ductwork.
3. Prepare the foundation in the selected location. Install anchor bolts to extend a minimum of 1 3/4-inches above foundation.
4. Locate the collector to ensure the shortest and straightest inlet- and outlet-duct length, easy access to electrical and compressed-air connections, and routine maintenance.

Electrical Wiring

1. All electrical wiring and connections, including electrical grounding, should be made in accordance with the National Electric Code, NFPA No. 70-latest edition.
2. Check local ordinances for additional requirements that apply.
3. The appropriate wiring schematic and electrical rating must be used. See unit's rating plate for required voltage.
4. If the unit is not furnished with a factory-mounted disconnect, an electric disconnect switch having adequate amp capacity shall be installed in accordance with Part J, Article 430 of the National Electrical Code, NFPA No. 70-latest edition. Check unit's rating plate for voltage and amperage ratings.
5. Refer to the wiring diagram for the number of wires required for main power wiring and remote wiring.

Caution!

- Electrical installation must be performed by a qualified electrician and comply with all applicable national and local codes.
- Turn power OFF during installation or maintenance.
- Do not install in classified hazardous atmospheres without an enclosure rated for the application.

Rigging Instructions

Suggested Tools & Equipment

Clevis Pins and Clamps	Lifting Slings
Crane or Forklift	Pipe Sealant
Drift Pins	Pipe Wrenches
Drill and Drill Bits	Screwdrivers
End Wrenches	Socket Wrenches
Large Crescent Wrench	Spreader Bars

Hoisting Information

1. Use all lifting points provided.
2. Use clevis connectors, *not hooks*, on lifting slings.
3. Use spreader bars to prevent damage to unit's casing.
4. Check the Specification Control drawing for weight and dimensions of the unit, subassemblies, and components to ensure adequate crane capacity.
5. Allow only qualified crane operators to lift the equipment.
6. Refer to applicable OSHA regulations and local codes when using cranes, forklifts, and other lifting equipment.
7. Lift unit and accessories separately, and assemble after unit is in place.
8. Use drift pins to align holes in section flanges during assembly.

Caution!

- Failure to lift the collector correctly can result in severe personal injury or property damage.
- Use appropriate lifting equipment and adopt all safety precautions needed for moving and handling the equipment.
- A crane or forklift is recommended for unloading, assembly, and installation of the collector.
- Location must be clear of all obstructions, such as utility lines or roof overhang.

Typical Installation

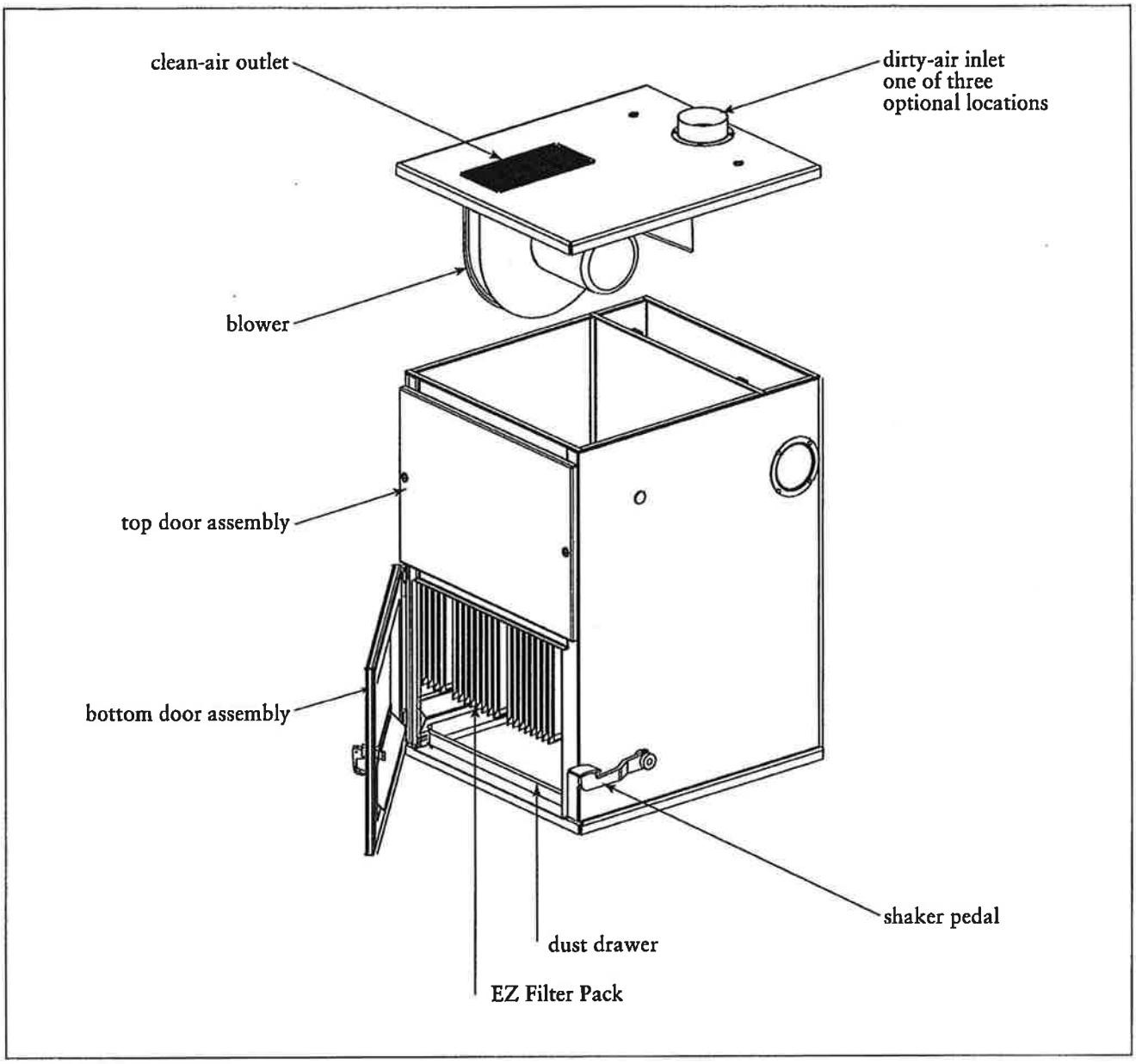

Typical Installation

Standard Equipment

Standard equipment consists of a self-contained unit housing the filters, blower, clean- and dirty-air chambers, and dust drawers. Locate the unit as close to the dust source as possible, except where explosive or flammable material is present.

1. Make the electrical connections to the customer-supplied safety disconnect switch, blower, and blower starter.
2. Turn power ON at source.
3. Turn the blower motor ON then OFF to check for proper rotation by referencing the rotation arrow located on the blower housing. A blower running in the wrong direction will still deliver approximately 40% of its rated air volume making proper rotation extremely important.

   To reverse rotation, single-phase power supply:

   Follow manufacturer's instructions on the motor's nameplate.

   To reverse rotation, three-phase power supply:

   Turn electrical power OFF at source and switch any two leads on the output-side of the fan-motor starter.

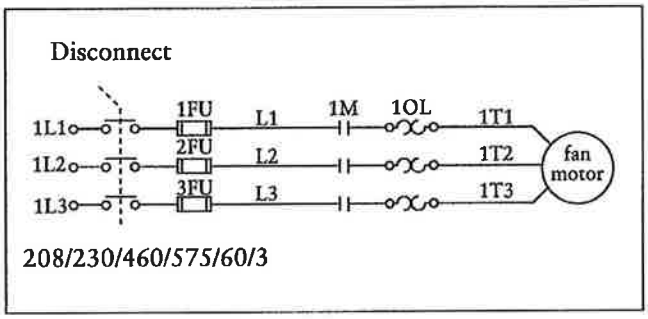

Motor Starter Wiring Diagram

Optional Equipment

Hopper

1. Attach legs and cross bracing to hopper using 3/8-16 x 1-in bolts, washers, and nuts as shown. Cross braces can be installed to allow front or back hopper access.

   Note: The 5-gallon pail hopper does not require cross bracing.
2. Position the hopper and leg assembly on the foundation's anchor bolts and fasten securely.
3. Apply 1/4-in diameter rope-type sealant to the hopper's top flange.
4. Lift cabinet over hopper and leg assembly and lower slowly.
5. Secure with bolts, washers, and nuts supplied.

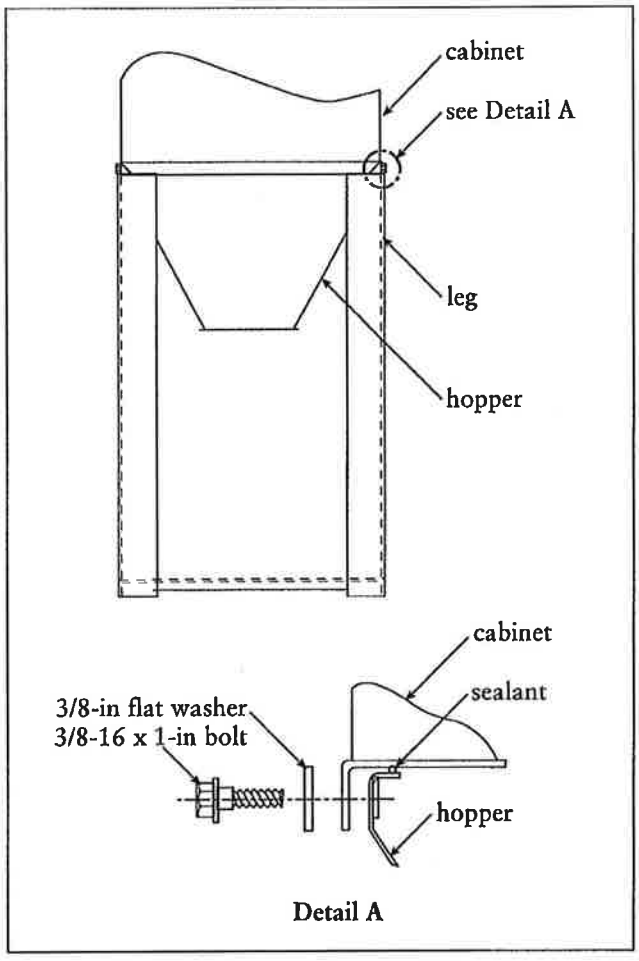

Hopper to 5-Gallon Pail Assembly

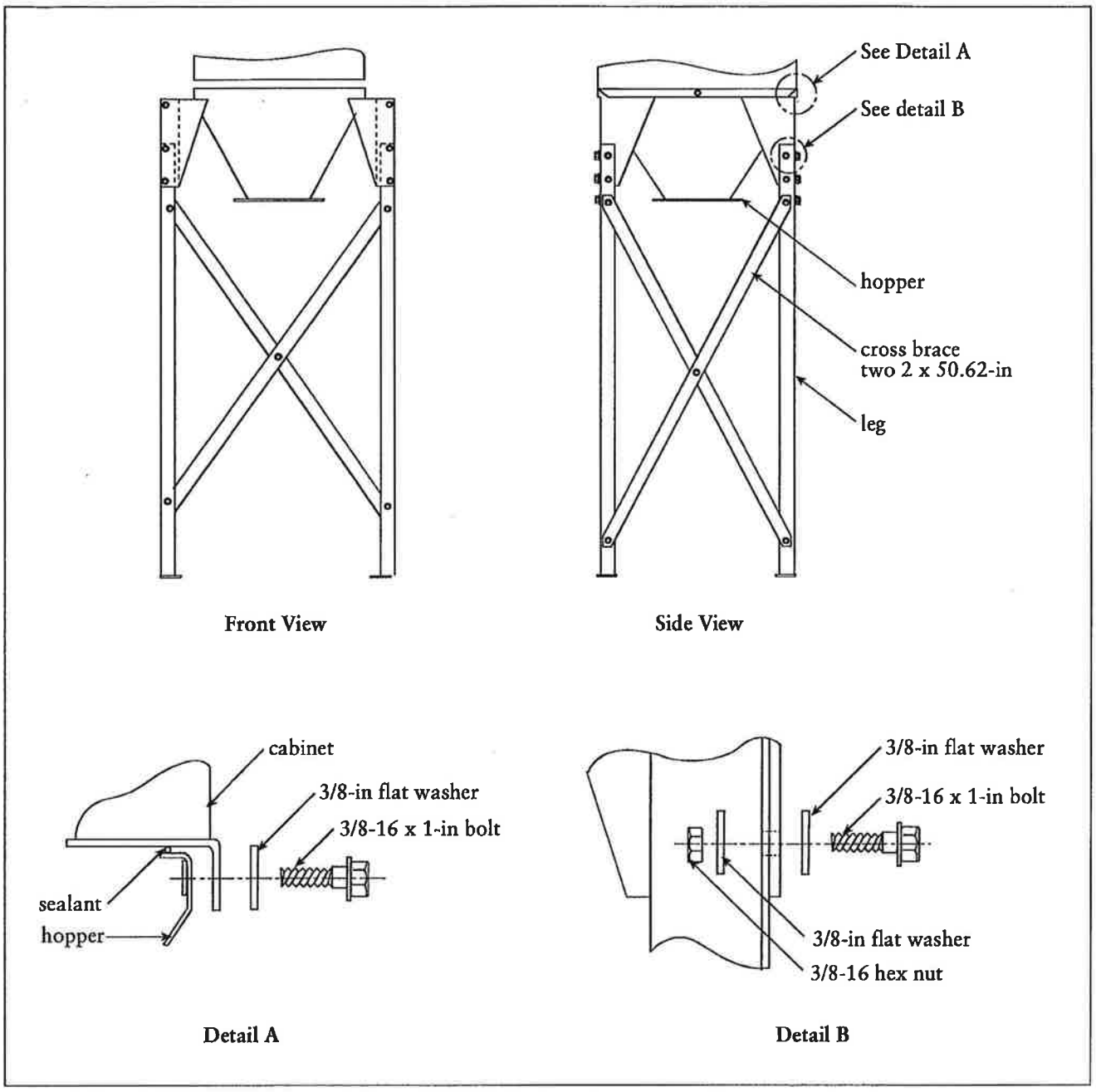

Hopper to 55-Gallon Drum Assembly

Hopper Attachments

5- or 55-Gallon Drum Packs with or without Slide Gate

1. Apply 1/4-in diameter rope-type sealant to the drum cover mounting plate flange.
2. Fasten the drum cover assembly to the hopper flange using the hardware supplied.

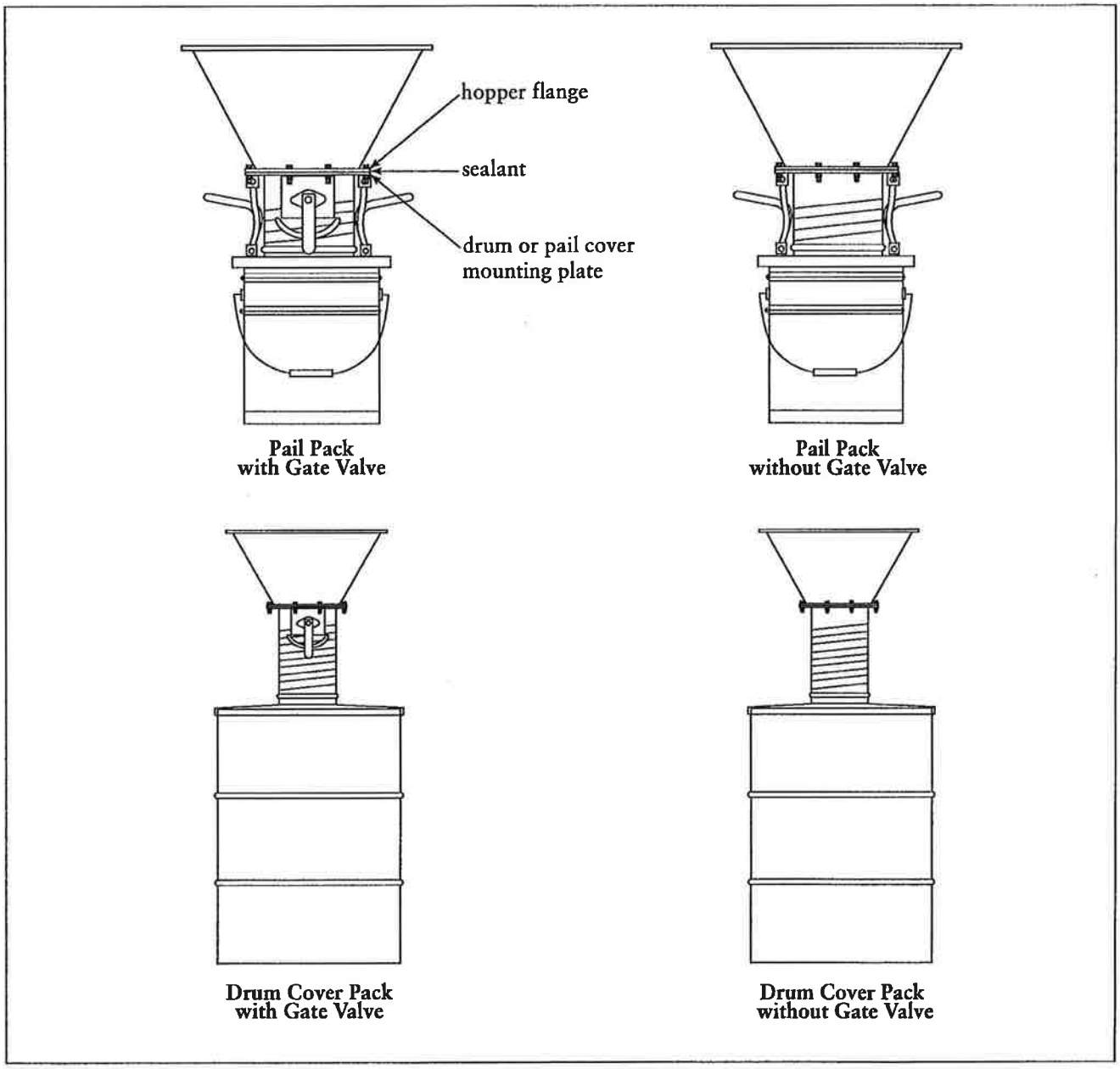

5- or 55-Gallon Drum Packs with and without Slide Gate

Indoor Exhaust Deflector

1. Remove the top door assembly and set aside.
2. Place a piece of non-combustible cloth over the filters in the clean-air chamber to protect them from drilling chips.
3. Use a .213-in diameter drill bit to drill eight holes as shown.
4. Position the indoor exhaust deflector on the cabinet top and fasten using eight 1/4-20 thread-cutting screws. Tighten securely.
5. Carefully remove the cloth protecting the filters. Replace the top door assembly and tighten securely by hand.

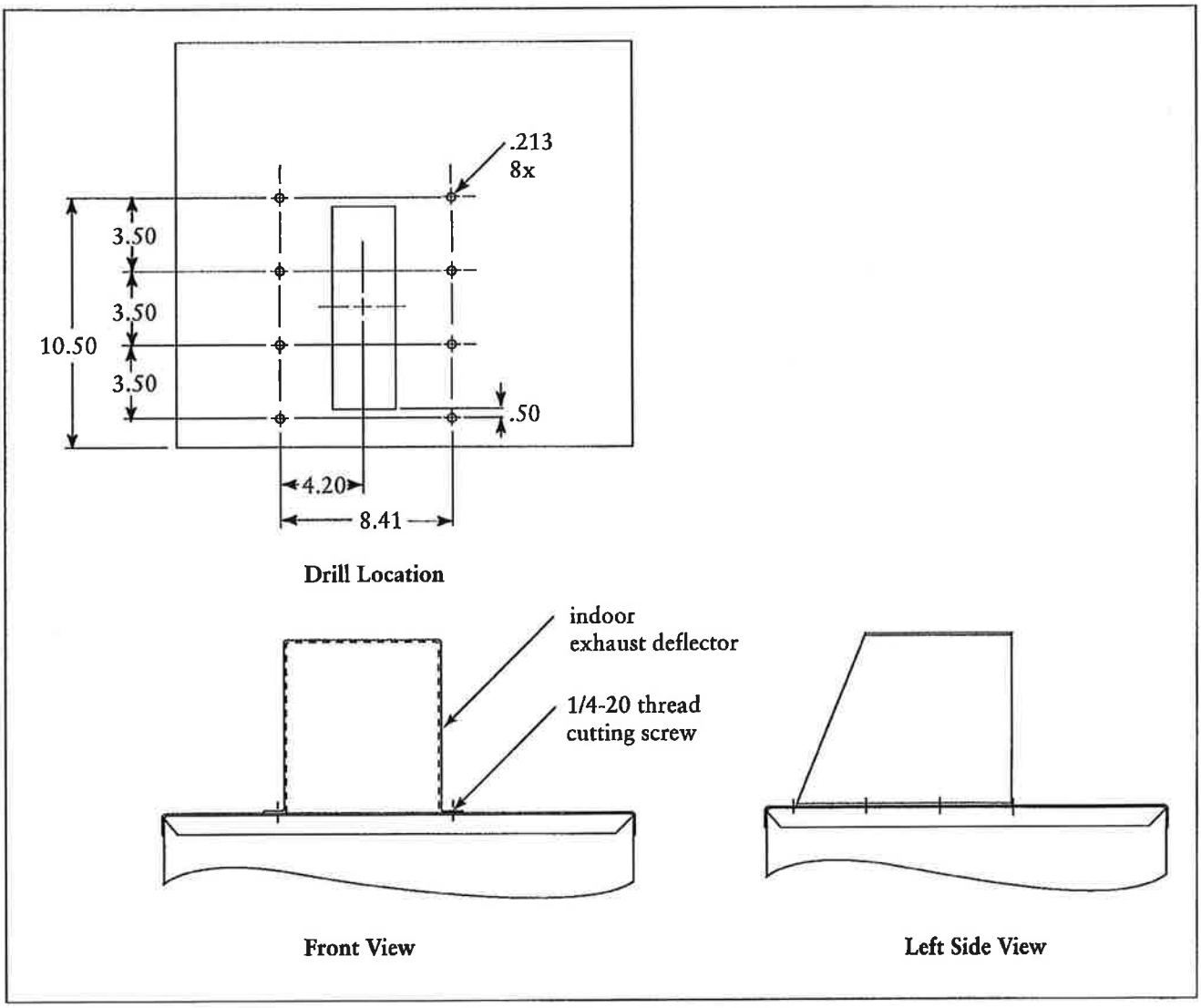

Indoor Exhaust Deflector

Outdoor Exhaust Deflector

1. Remove the top door assembly and set aside.
2. Place a piece of non-combustible cloth over the filters in the clean-air chamber to protect them from drilling chips.
3. Use a .218-in diameter drill bit to drill eight holes as shown.
4. Position the indoor exhaust deflector on the cabinet top, align holes and fasten using eight #10-24 x 1/2-in bolts, washers, and nuts supplied. Tighten securely.
5. Apply sealant around outside edge of the exhaust deflector.
6. Carefully remove the cloth protecting the filters. Replace the top door assembly and tighten securely by hand.

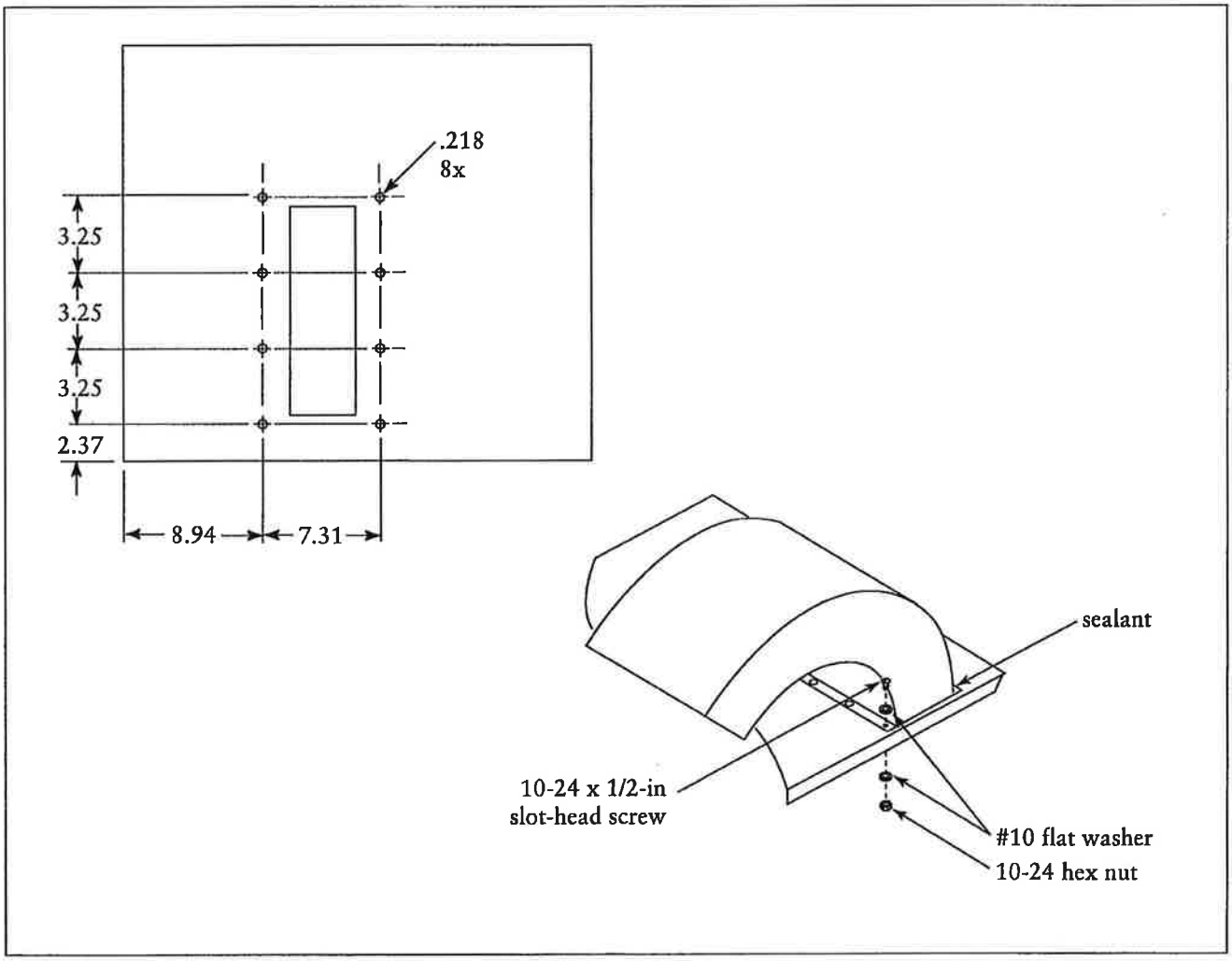

Outdoor Exhaust Deflector

Ductwork

Note: If unit is operated with more than the maximum permissible inlet size, the fan motor can overload or dust can settle in the duct due to low air velocity.

1. Inlet collars can be located on the side, top, or back of the cabinet by removing the desired inlet cover plate and installing the inlet collar using the same screws.
2. Use the shortest possible inlet duct. Avoid the use of tees or flexible, wire-molded duct except where machine motion or vibration needs to be isolated. Flexible duct has a high static pressure and reduces airflow.
3. Size duct for the recommended air velocity of the conveyed material or material may collect inside the duct.
4. Connect joints with sheet metal screws, rivets, or sealer. Finish each joint with sealer or duct tape.

   Note: Sheet metal screws may cause fibrous or stringing particulate to accumulate inside duct. Use rivets or sealant in these conditions.

Suction Tube Assembly

3- and 4-Inch

1. Apply a thin layer of grease to the inside surface of the inlet collar.
2. Slide the suction tube base into the inside of the inlet collar. Swivel the suction tube to lubricate all surfaces.

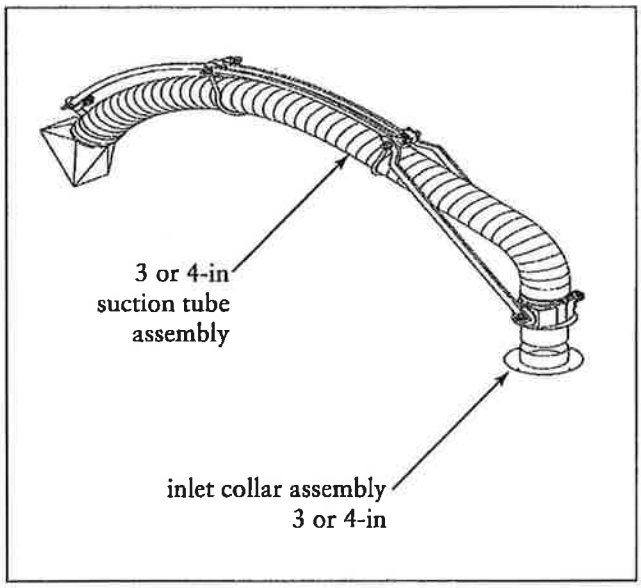

3- and 4-Inch Suction Tube Assembly

6-Inch

1. Remove the inlet access covers on the top and back of the unit and set aside.
2. Use a .343-in diameter drill bit to drill four holes in the top of the unit as shown.
3. Apply sealant around the inside edge of the bolt pattern.
4. Position the suction tube assembly on the collector top, align holes, and fasten securely using 5/16-18 x 1 1/4-in bolts, washers, and nuts supplied.
5. Replace the back access cover plate.

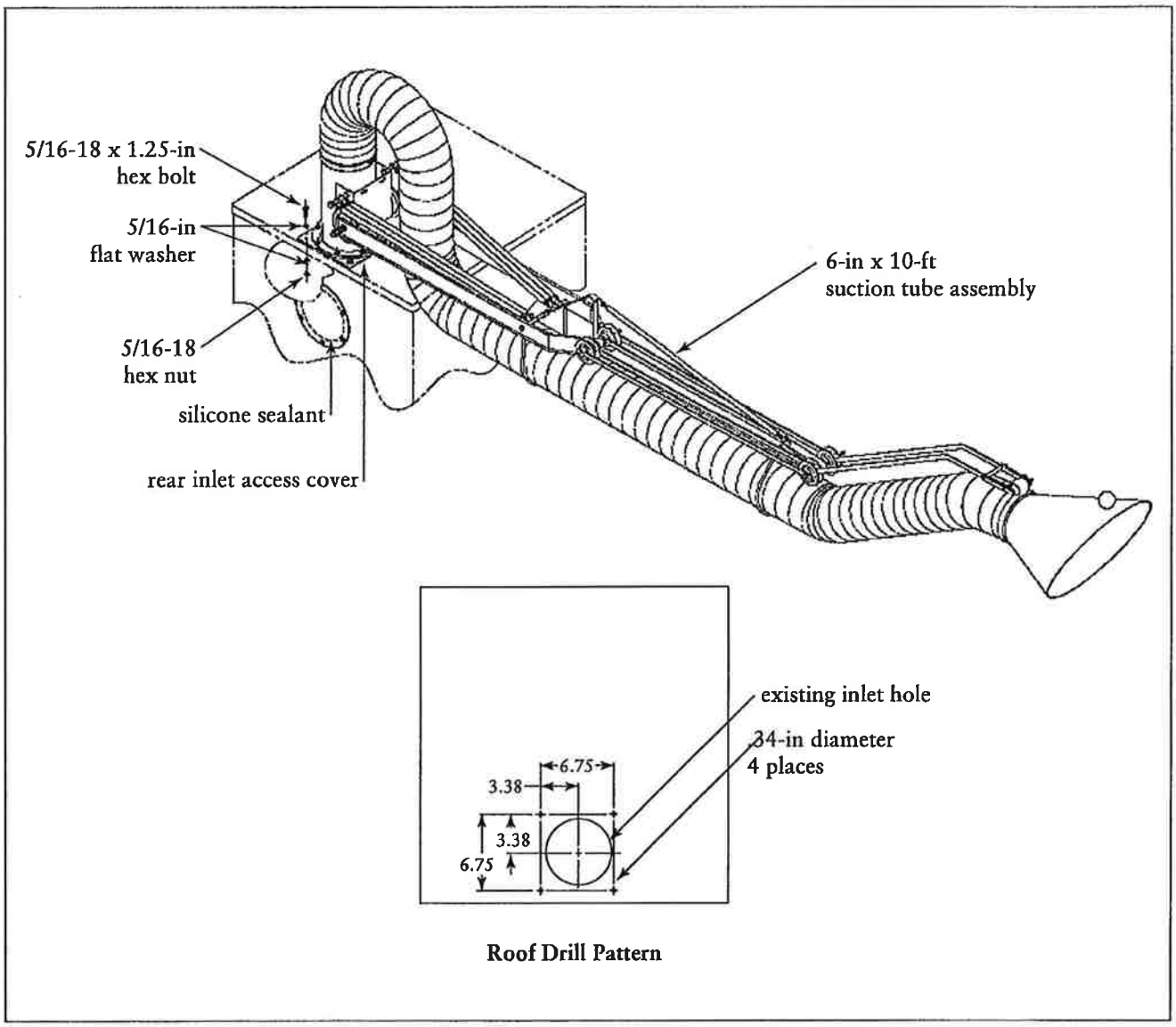

6-Inch Suction Tube Assembly

Magnehelic Gauge

The Magnehelic is a differential pressure gauge used to measure the pressure difference between the clean- and dirty-air chambers and provides a visual display of filter change requirements. The high-pressure tap is located in the dirty-air chamber and the low-pressure tap is located in the clean-air chamber.

1. Choose a convenient, accessible location on or near the unit for mounting that provides the best visual advantage.

If unit is equipped with factory-installed pressure taps, skip to Step 5.

2. Before drilling, place a piece of non-combustible cloth over the filter opening in the clean-air chamber to protect them from drilling chips.
3. Place a piece of wood behind the drill location in the dirty-air chamber to protect the filters from damage by the drill bit. Use a .406-inch diameter bit to drill the holes as shown in Magnehelic Gauge, Detail A.
4. Mount the pressure tap hardware on the clean-air chamber panel. Mount the pressure tap with the tee inside the dirty-air chamber.
5. Plug the pressure ports on the back of the gauge using two, 1/8-in NPT pipe plugs supplied. Install two, 1/8-in NPT male adapters supplied with the gauge into the high- and low-pressure ports on the side of the gauge. Attach the mounting bracket using three, #6-32 x 1/4-in screws supplied.

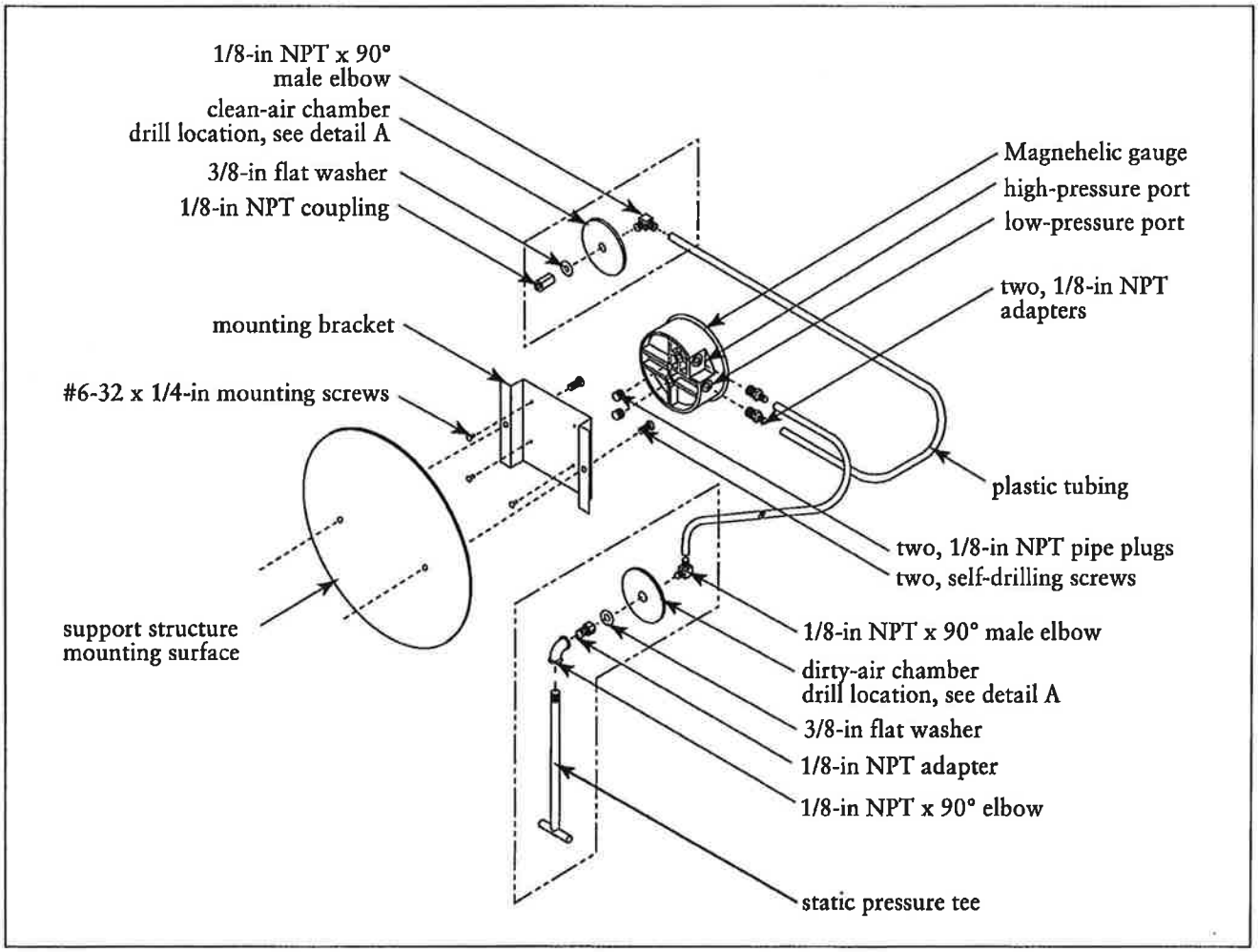

Magnehelic Gauge Assembly

6. Mount the gauge and bracket assembly to the supporting structure using two self-drilling screws.
7. Thirty-five feet of plastic tubing is supplied and must be cut in two sections. Connect one section of tubing from the gauge's high-pressure port to the pressure fitting located in the dirty-air chamber. Connect remaining tubing from the gauge's low-pressure port to the fitting in the clean-air chamber. Additional tubing can be ordered from your representative.
8. Carefully remove the cloth protecting the filters. Close access doors and tighten securely by hand.
9. Zero and maintain the gauge as directed in the manufacturer's Operating and Maintenance Instructions provided.

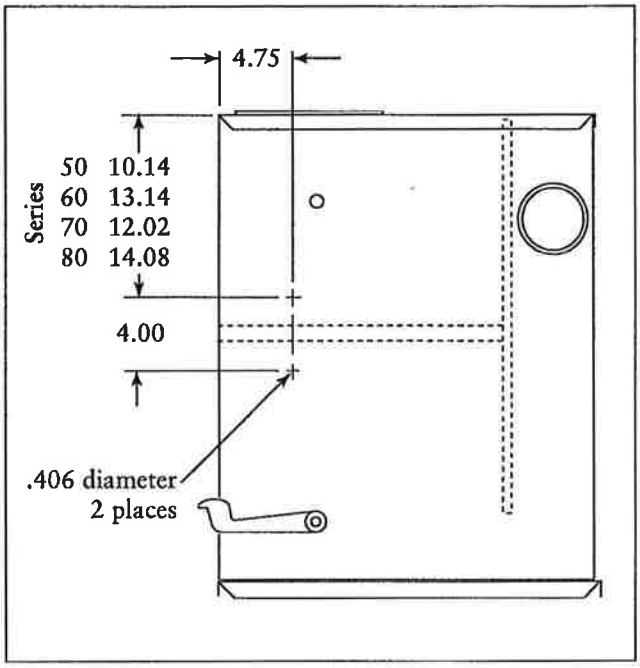

Magnehelic Gauge Detail A

Outrigger Pack

Note: Outrigger pack is for use with dust drawer models only.

1. Center the unit on the outrigger pack aligning the appropriate bolt patterns.
2. Fasten the four mounting tabs to the outrigger base using four 5/16-18 x 4-in bolts, washers, and nuts. Tighten securely.
3. Drill four .312-in diameter holes in the cabinet base using the mounting tab holes as a guide.
4. Attach the cabinet base to the mounting tabs using four 5/16-18 x 3/4-in bolts, washers, and nuts. Tighten securely.

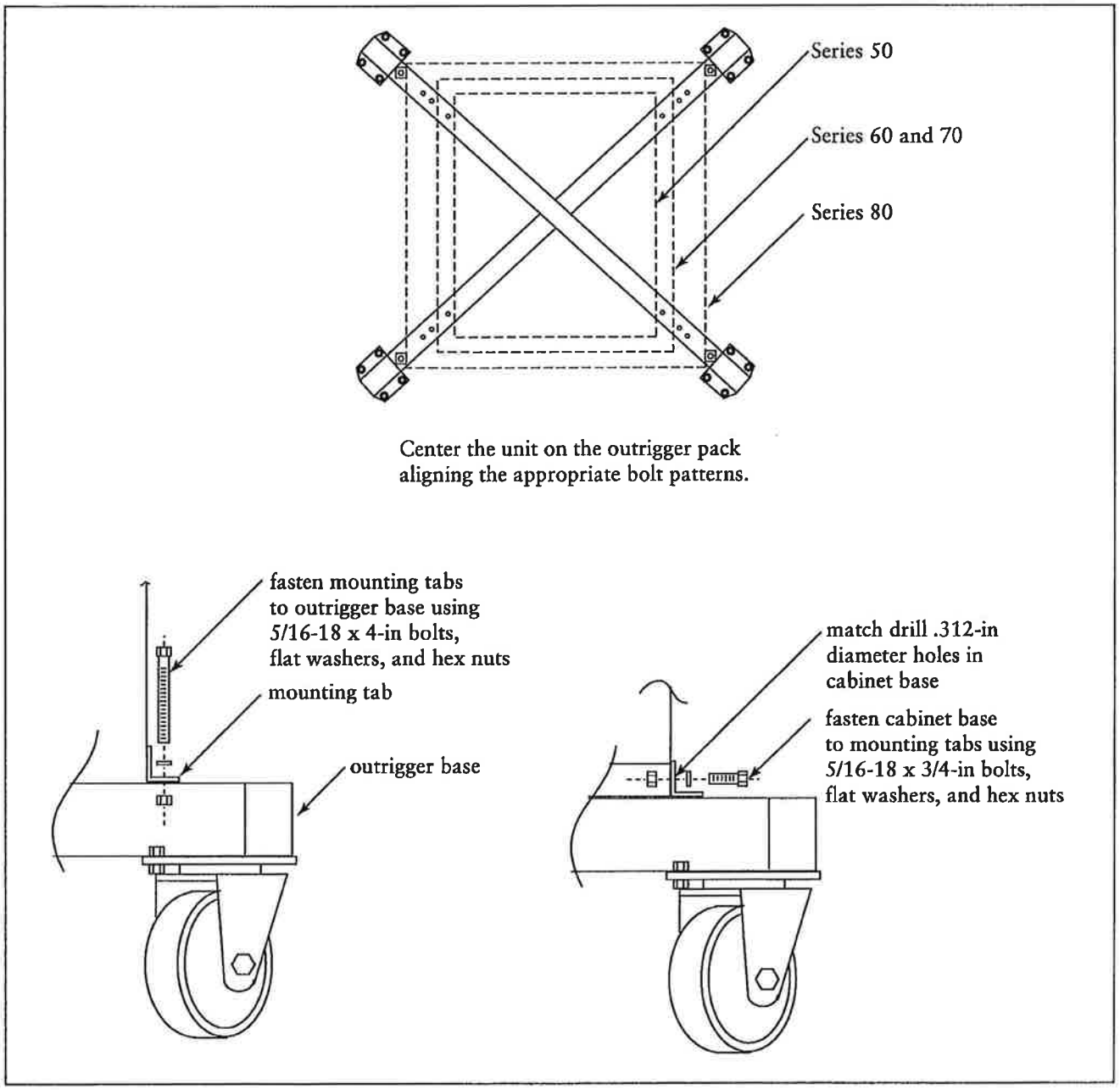

Outrigger Pack Assembly

HEPA Filter

Models 60 and 70

1. Position the HEPA filter pack on top of the unit as shown.
2. Remove the top door assembly and set aside.
3. Place a piece of non-combustible cloth over the filters in the clean-air chamber to protect them from drilling chips.
4. Position angle bracket on each side of the unit flush with the top and under the HEPA filter brackets as shown.
5. Using the holes in the angle brackets as a guide, drill two .213-in diameter holes in the cabinet side and two in the HEPA filter pack.
6. Remove HEPA filter pack and apply silicone sealant around mounting surface.
7. Fasten angle bracket to cabinet using four 1/4-20 thread-cutting screws supplied.
8. Align holes in the HEPA filter pack angle brackets with the holes drilled in the bracket top surfaces and secure using four 1/4-20 thread-cutting screws.
9. Carefully remove the cloth protecting the filters. Replace the top door assembly and tighten securely by hand.

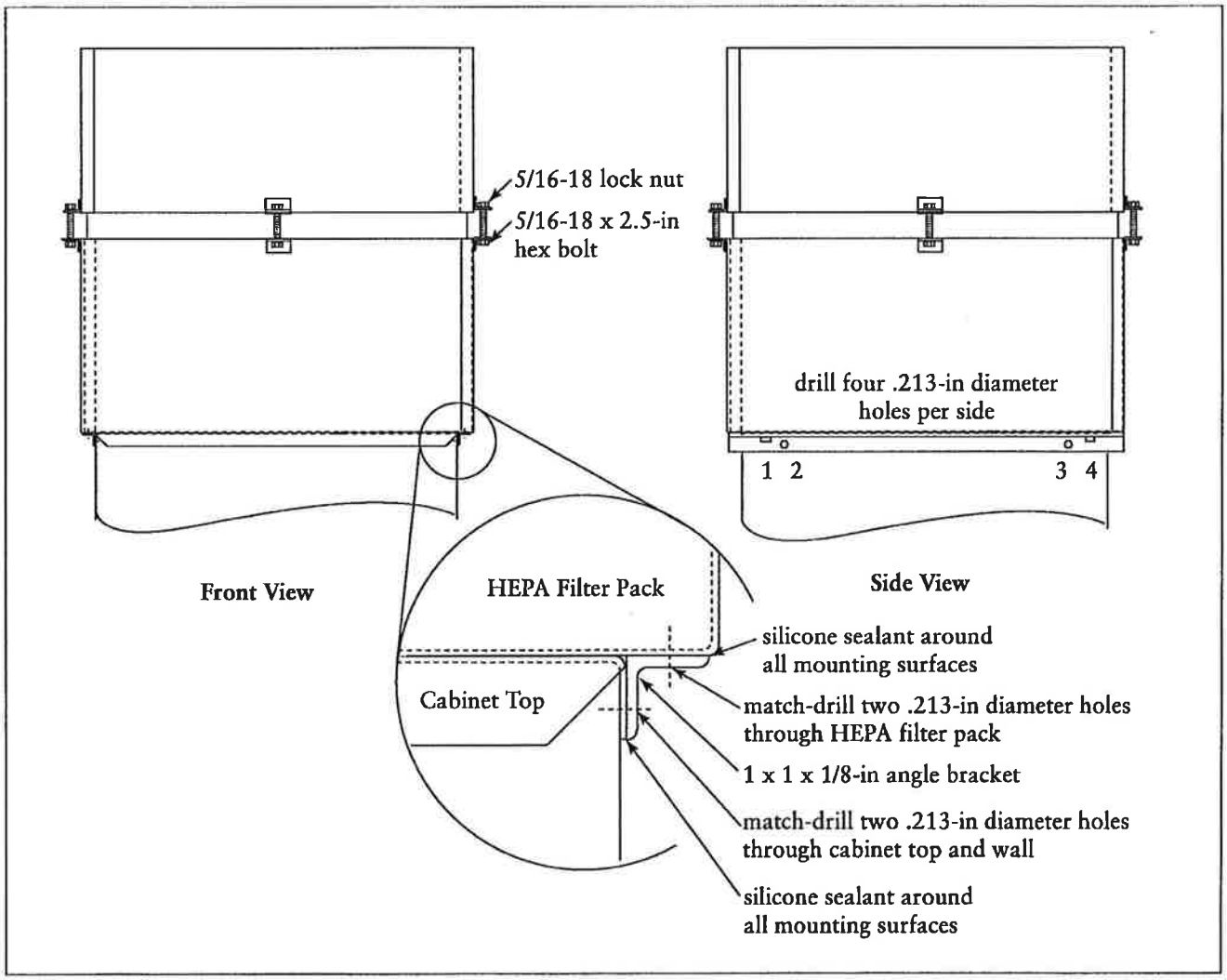

HEPA Filter Models 60 and 70

Model 80

1. Remove the top door assembly and set aside.
2. Place a piece of non-combustible cloth over the filters in the clean-air chamber to protect them from drilling chips.
3. Use a .312-in diameter drill bit to drill four holes in the collector top as shown.
4. Apply sealant around sealing surface on cabinet top.
5. Position the HEPA filter pack on top of the unit aligning holes.
6. From inside the clean-air chamber, fasten the filter pack to the top using four 1/4-20 thread-cutting screws.
7. Carefully remove the cloth protecting the filters. Replace the top door assembly and tighten securely by hand.

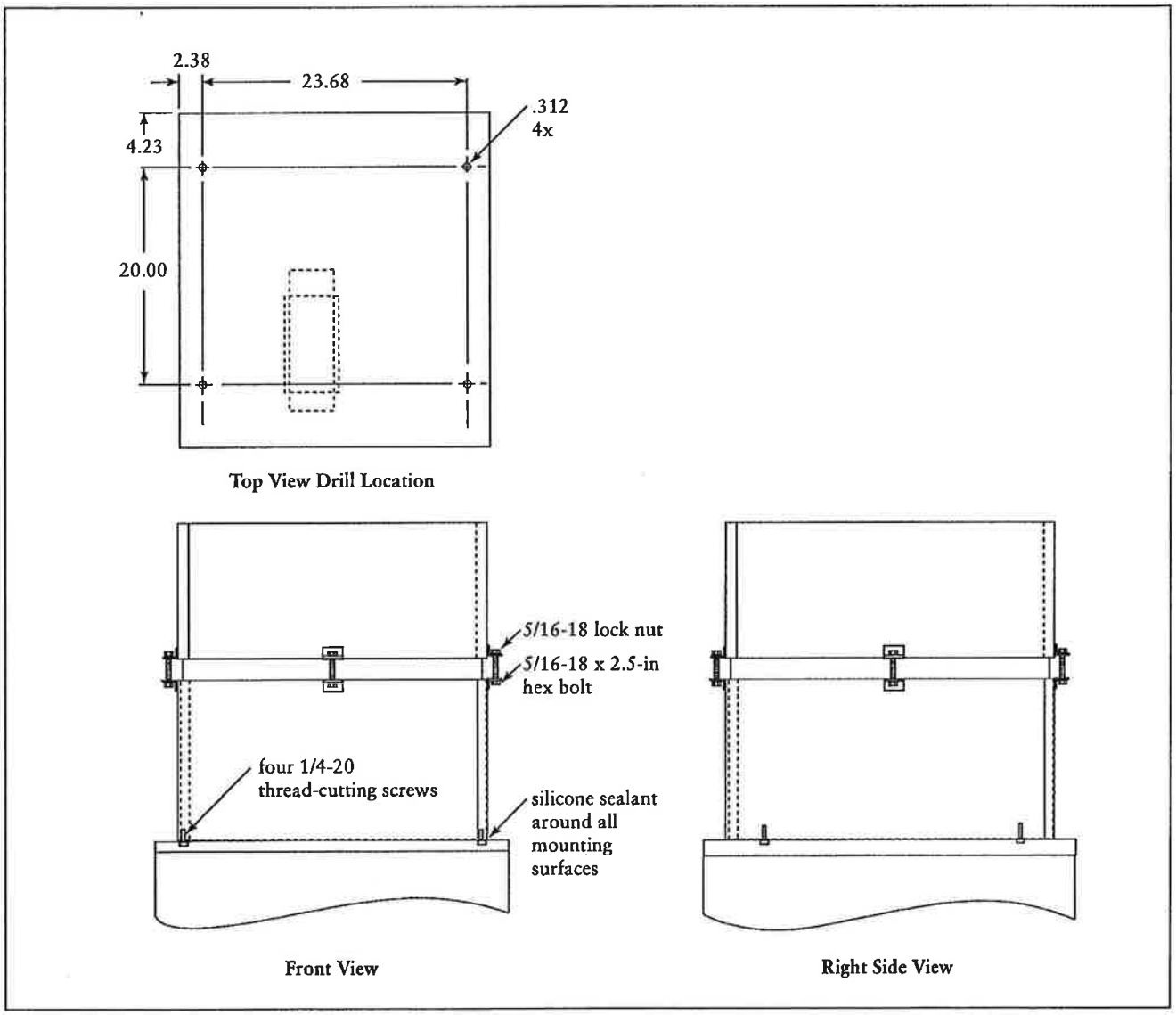

HEPA Filter Model 80

Exhaust Silencer

If an exhaust silencer was ordered with the unit, the mounting holes are pre-drilled.

To install an add-on silencer:

1. Remove the top door assembly and set aside.
2. Place a piece of non-combustible cloth over the filters in the clean-air chamber to protect them from drilling chips.
3. Use a .116-in diameter drill bit to drill eight holes in the collector top as shown.
4. Position the exhaust silencer, align holes, and fasten securely with #7 x 1/2-in screws supplied.
5. Carefully remove the cloth protecting the filters. Replace the top door assembly and tighten securely by hand.

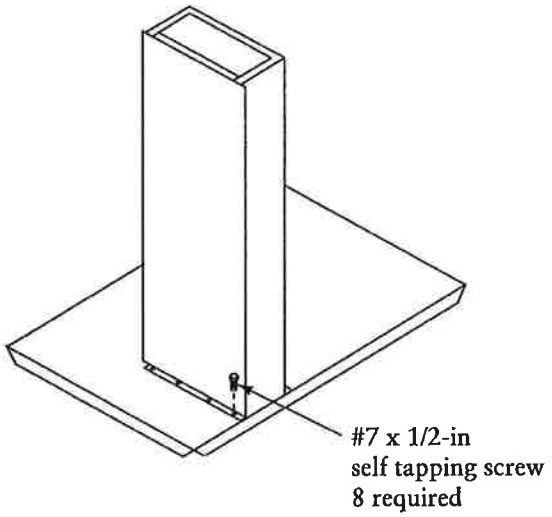

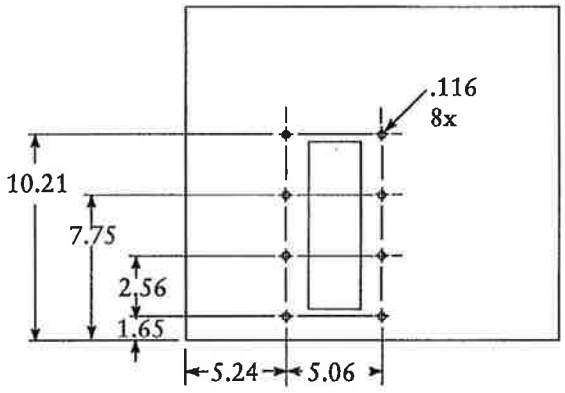

Series 50 Drill Location

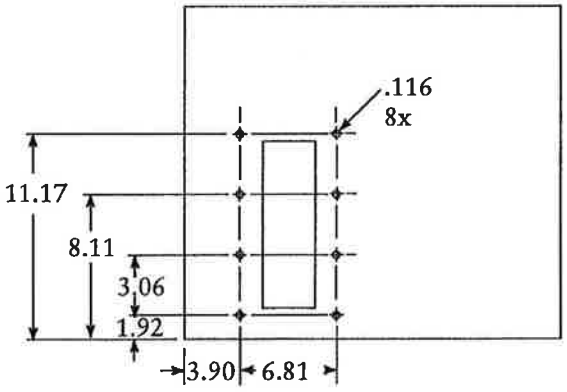

Series 60 and 70 Drill Location

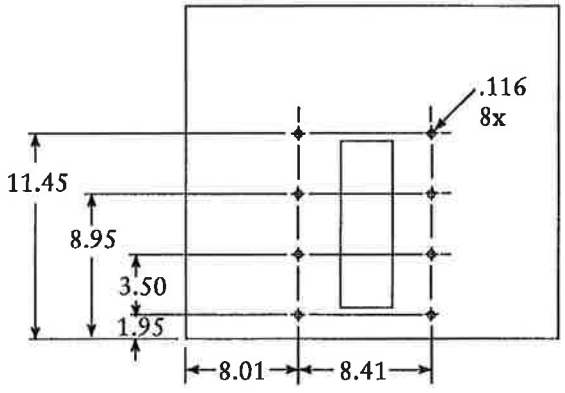

Series 80 Drill Location

Exhaust Silencer Installation

Attenuator

If an attenuator was ordered with the unit, the mounting holes are pre-drilled.

To install an add-on attenuator:

1. Remove the top door assembly and set aside.
2. Place a piece of non-combustible cloth over the filters in the clean-air chamber to protect them from drilling chips.
3. Use a .213-in diameter drill bit to drill eight holes in the collector top as shown.
4. Position the attenuator assembly, align holes, and fasten securely using eight 1/4-20 thread-cutting screws supplied.
5. Carefully remove the cloth protecting the filters. Replace the top door assembly and tighten securely by hand.

Model	A	B
Series 50	14.50	8.50
Series 60 and 70	14.50	8.63
Series 80	18.00	8.63

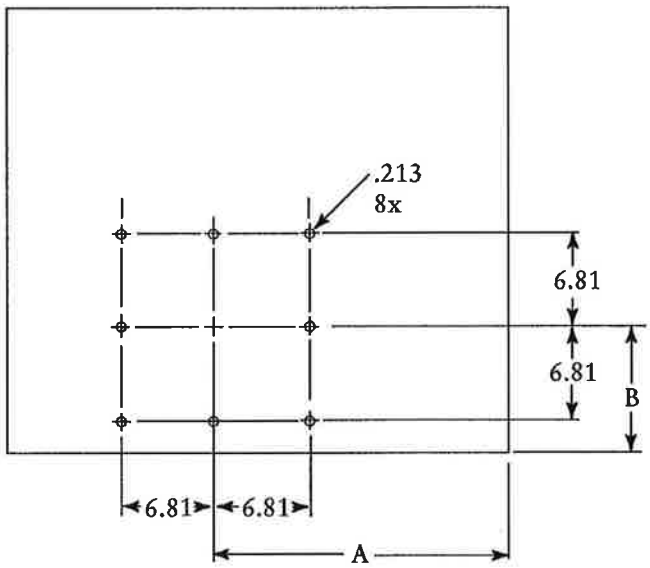

Drill Location

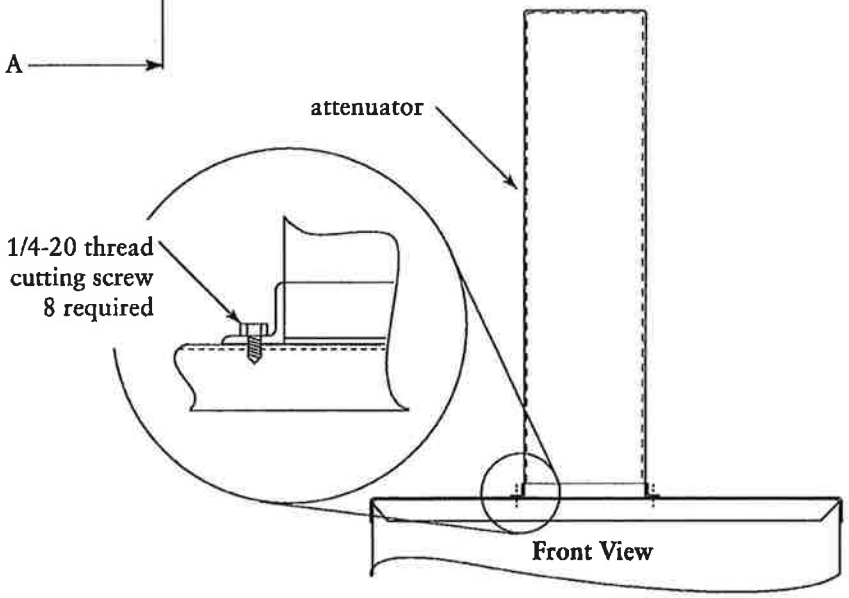

Attenuator Installation

Chamber Silencer

1. Place the chamber silencer over the clean-air outlet on top of the unit.
2. Position silencer flush with the front of the unit and the exhaust opening facing the front.
3. Secure with all four latches.

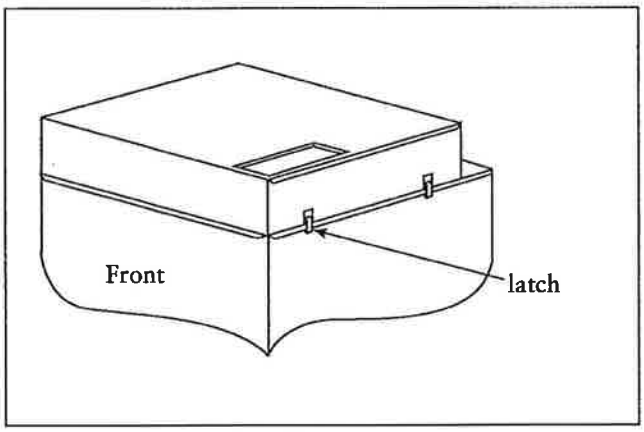

Chamber Silencer

Automatic Shaker

The automatic shaker is driven by a 1/10 Hp TENV gear motor controlled by a solid-state timer. The timer control box can be ordered with or without step-down transformers. A timer control box without the transformer requires a 120-Volt AC power supply controlled by a customer-supplied fan starter. Input power is supplied to the timer on fan motor shutdown, through the normally-closed auxiliary contact of the fan starter. After a 60-second delay, the timer energizes and the shaker motor starts for a 30-second fixed time. Turning the unit ON and OFF initiates the shaker sequence.

Wiring

1. Mount the timer control box in a convenient, accessible location on or near the unit.
2. Complete the wiring to the fan starter, timer, and shaker motor according to the appropriate wiring diagram.

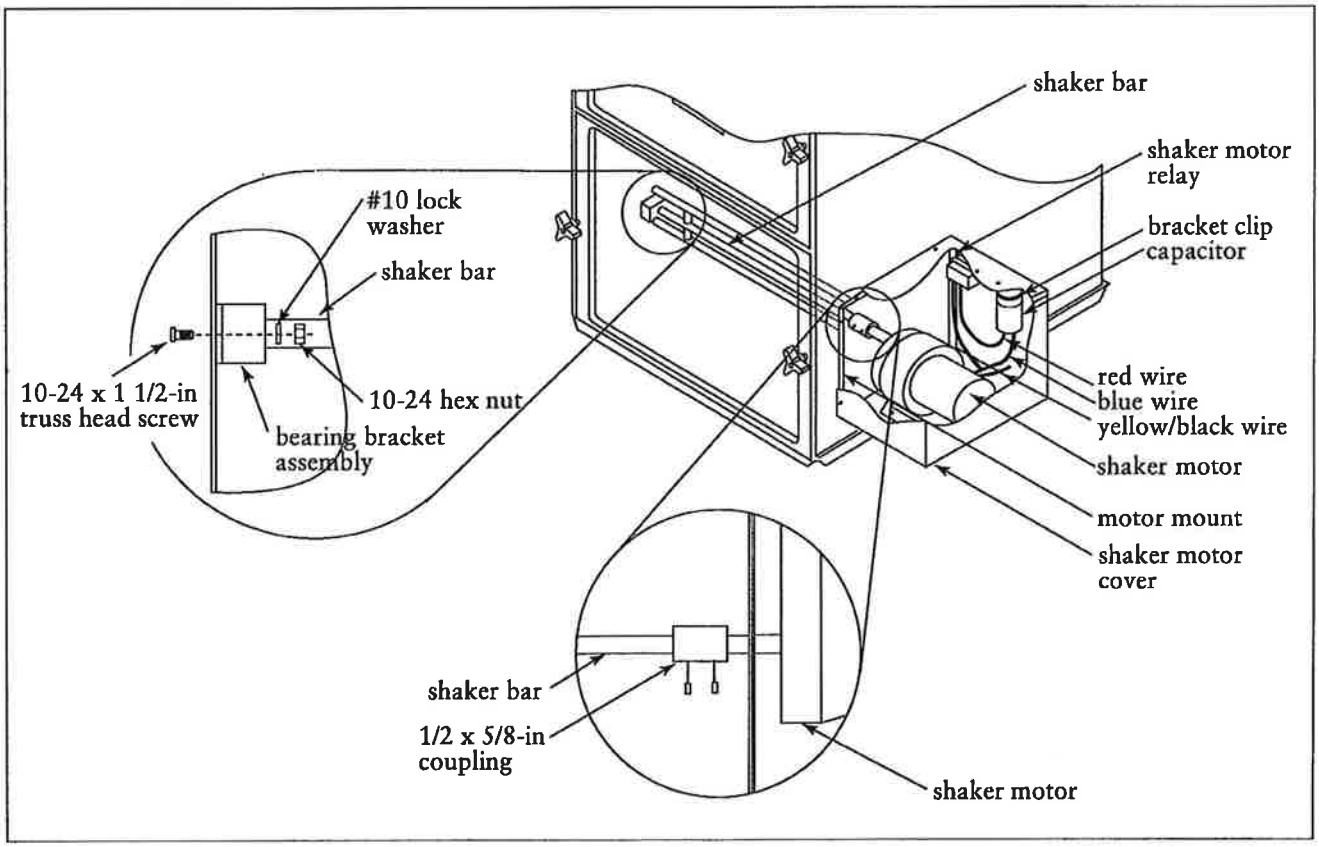

Automatic Shaker Installation

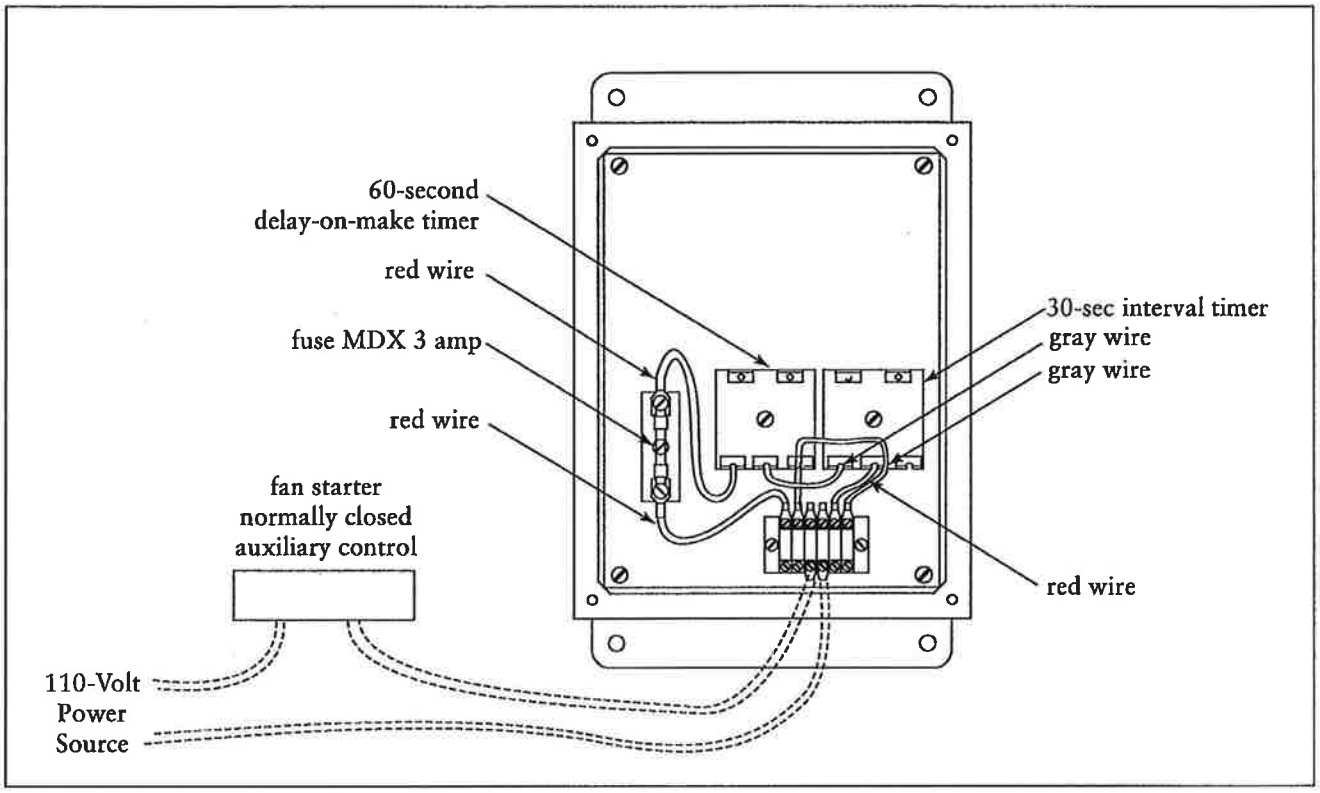

Series 50 to 80 Automatic Shaker without Transformer

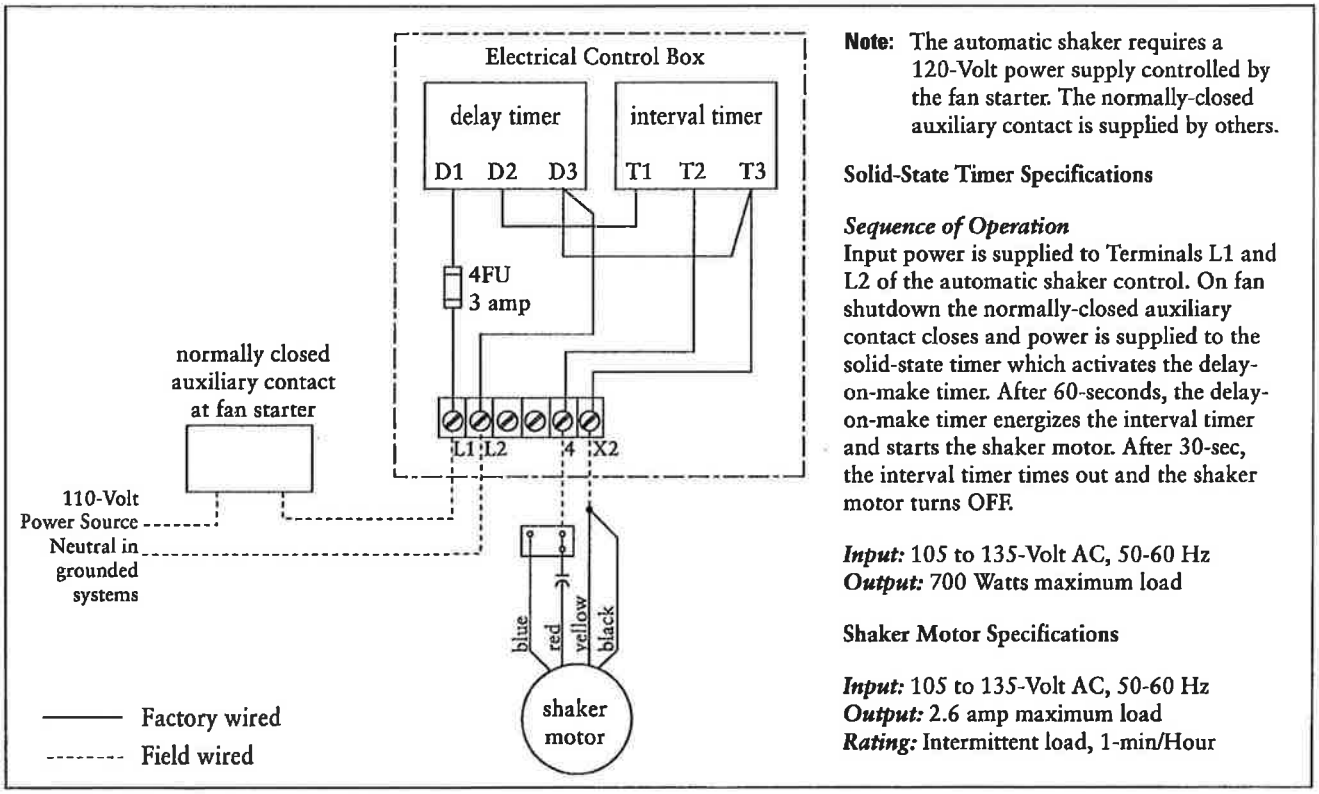

Note: The automatic shaker requires a 120-Volt power supply controlled by the fan starter. The normally-closed auxiliary contact is supplied by others.

Solid-State Timer Specifications

Sequence of Operation
Input power is supplied to Terminals L1 and L2 of the automatic shaker control. On fan shutdown the normally-closed auxiliary contact closes and power is supplied to the solid-state timer which activates the delay-on-make timer. After 60-seconds, the delay-on-make timer energizes the interval timer and starts the shaker motor. After 30-sec, the interval timer times out and the shaker motor turns OFF.

Input: 105 to 135-Volt AC, 50-60 Hz
Output: 700 Watts maximum load

Shaker Motor Specifications

Input: 105 to 135-Volt AC, 50-60 Hz
Output: 2.6 amp maximum load
Rating: Intermittent load, 1-min/Hour

Seriec 50 to 80 Automatic Shaker without Transformer Wiring Diagram

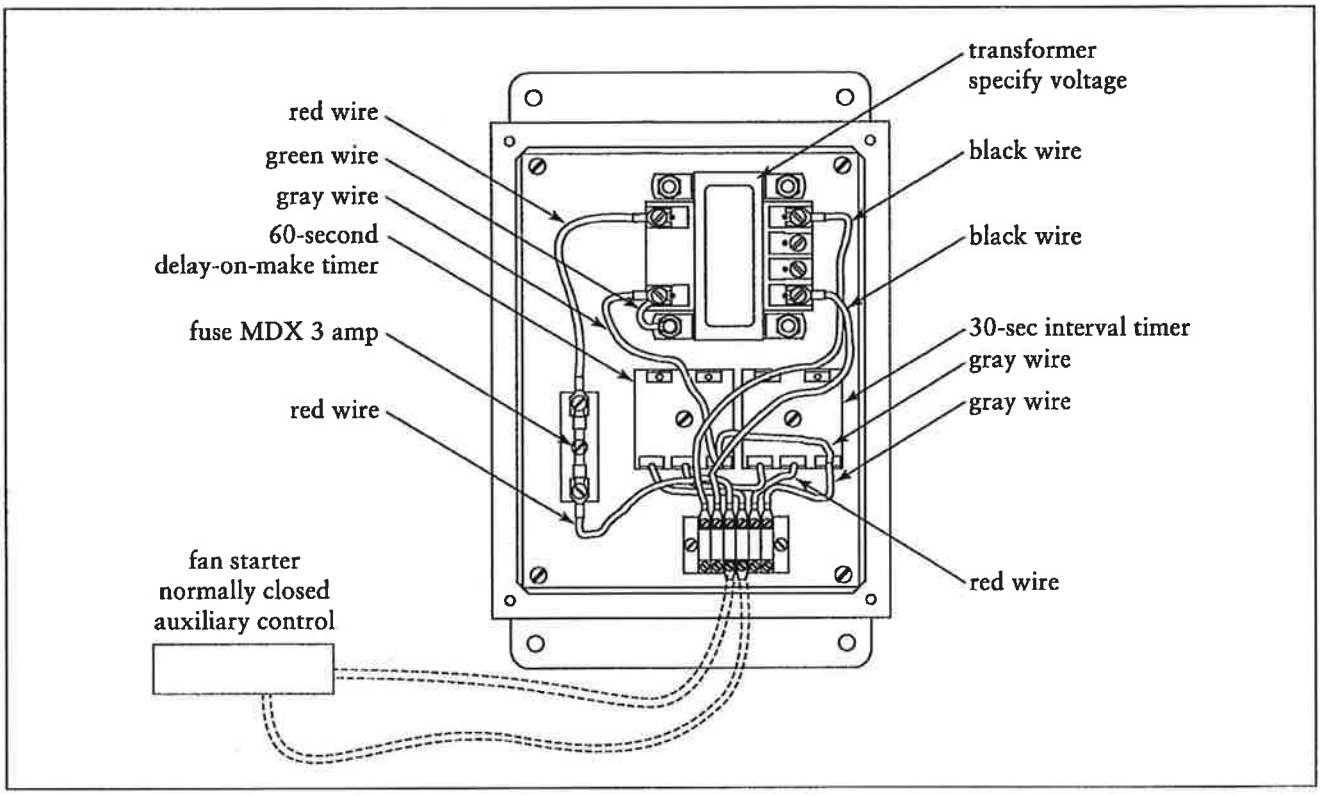

Series 50 to 80 Automatic Shaker with Transformer

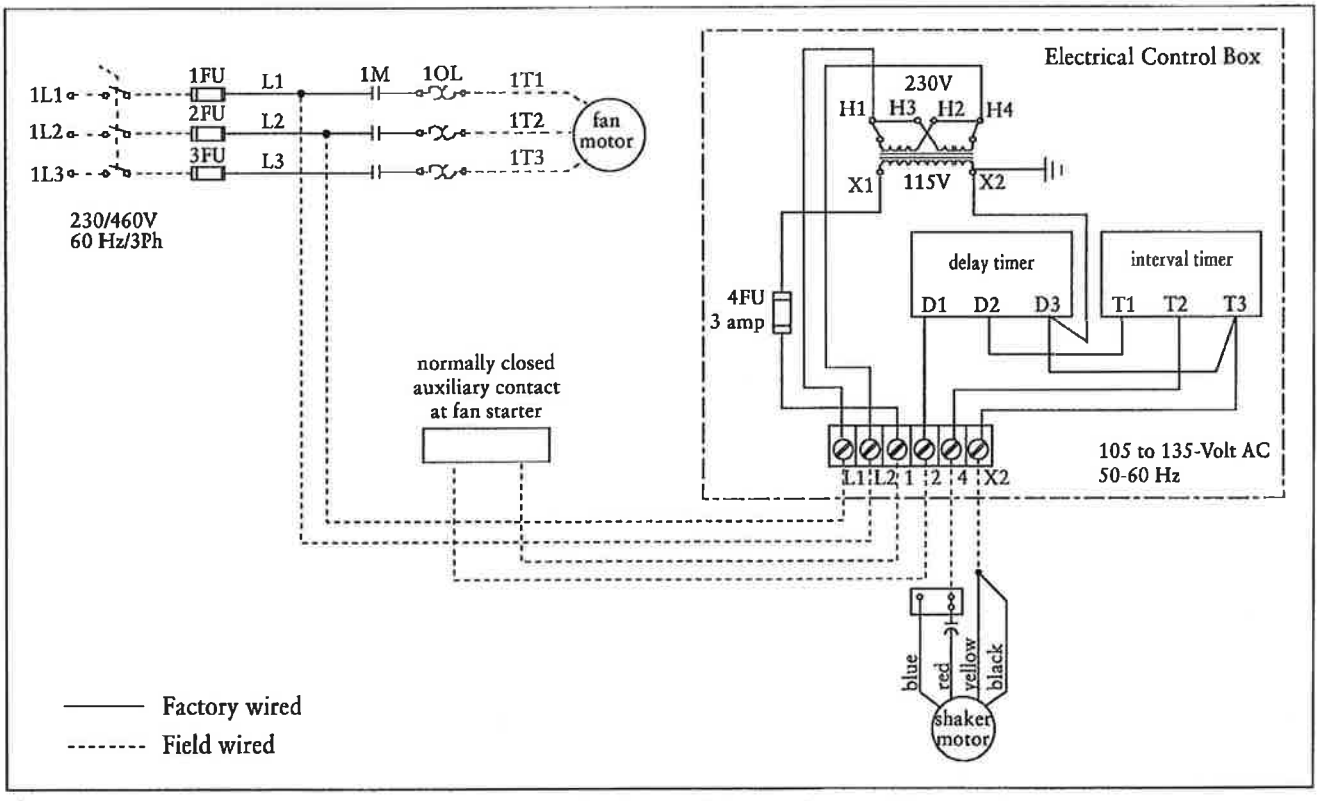

Seriec 50 to 80 Automatic Shaker with Transformer Wiring Diagram

Preliminary Start-Up Check

1. Check all electrical connections for tightness and contact.
2. Check for and remove all loose items in or near the inlet and outlet of the unit.
3. Check that all remote controls are wired into the control system, and all service switches are in the OFF position.
4. Check that all optional accessories are installed properly and secured.
5. Check that hopper discharge is open and the storage container is sealed, if equipped. Excess airflow to the blower will cause electrical failure.
6. Turn power ON at source.
7. Turn the fan motor ON then OFF to check for proper rotation by referencing the rotation arrow located on the motor's mounting plate.

   To reverse rotation, single-phase power supply:

   Follow manufacturer's instructions on the motor's nameplate.

   To reverse rotation, three-phase power supply:

   Turn electrical power OFF at source and switch any two leads on the output-side of the fan-motor starter.

Start-Up

1. Turn power ON at source.
2. Turn unit ON.
3. On hopper models with 5- or 55-gallon drum storage, check that hopper discharge is open and the storage container is sealed, if equipped. Excess airflow to the blower will cause electrical failure.
4. When airflow diminishes, turn the unit OFF and manually shake the EZ Filter Pack.

Service Information

EZ Filter Pack Installation

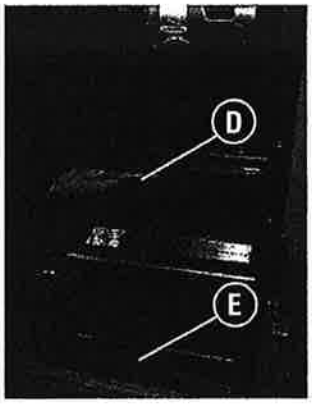

Step 1

A. Remove top and bottom doors and set aside.

B. Remove and discard set screws and hold-down channels.

C. Remove and discard envelope bags.

D. Clean bottom of cabinet ledge with stiff brush.

Note: The EZ Filter Pack seals against the bottom of the cabinet ledge.

E. Remove and empty dust drawer.

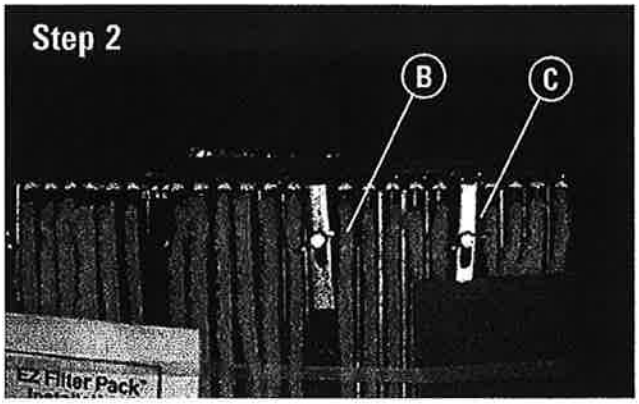

Step 2

A. Remove banded EZ Filter Pack from box. Do not remove bands.

B. Loosen wing screws fully.

C. Move slide latches back, away from the gasket.

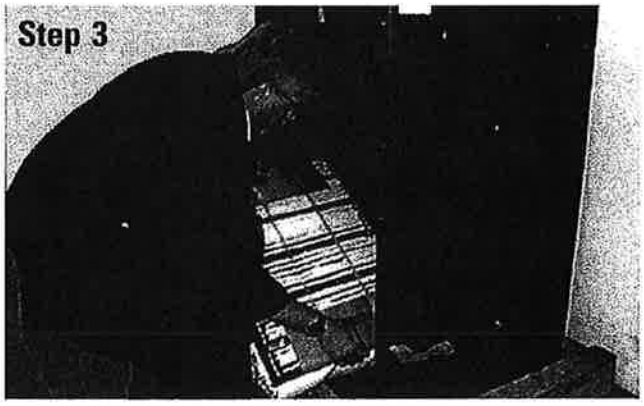

Step 3

A. Insert banded EZ Filter Pack over shaker bar.

B. Cut and remove bands.

C. Remove cardboard protectors.

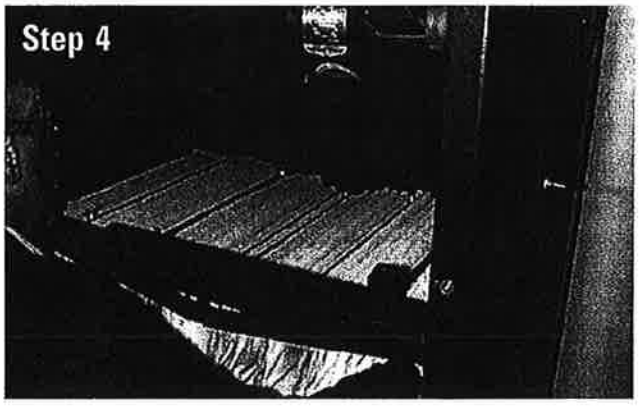

Step 4

A. Insert one hand midway under each side of the EZ Filter Pack.

B. Push EZ Filter Pack to bottom of the cabinets filter frame.

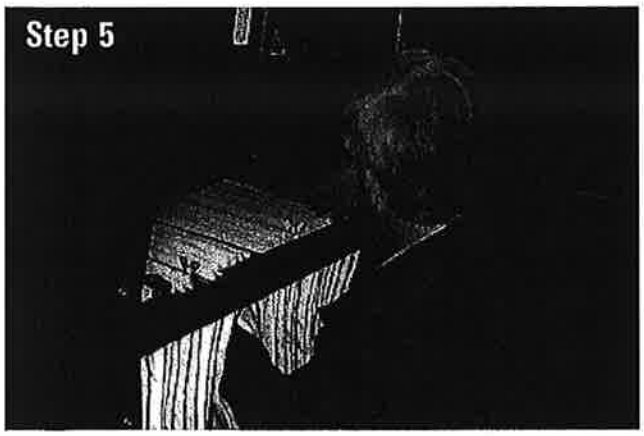

Step 5

A. Place one hand under the center of the EZ Filter Pack.

B. Hold filter back against bottom of cabinet ledge.

C. Push each slide latch over cabinet ledge.

D. Do not tighten wing screws at this time.

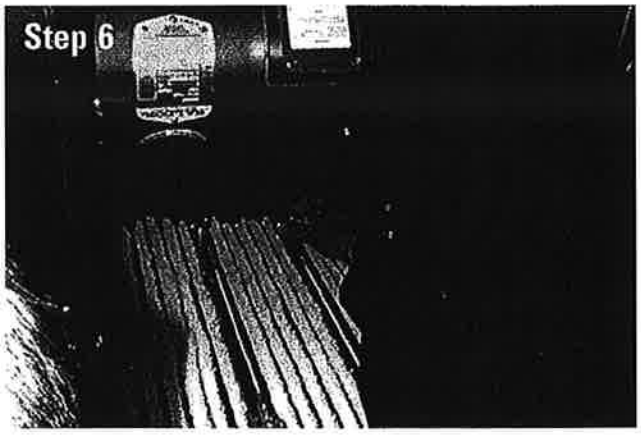

Step 6

A. Distribute filter envelopes evenly.

B. Finger-tighten wing screws.

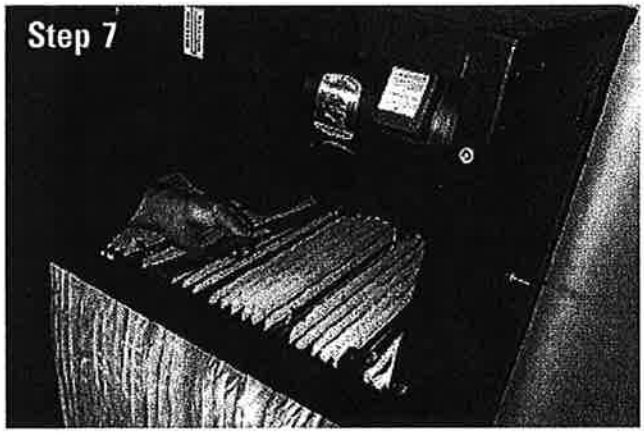

Step 7

A. Place support bar over center of EZ Filter Pack.

B. Insert small wing screws through holes in support bar.

C. Hand tighten all wing screws.

Step 8

A. Inspect filter seal.

B. Replace clean dust drawer.

C. Replace cabinet doors and tighten securely by hand.

EZ Filter Pack Maintenance

1. Manually or automatically clean the filters once each day depending on load circumstances.
2. A good practice is to clean filters at break, lunch, and end of day.

Dust Disposal

1. Turn unit OFF and empty dust container as necessary to minimize dust in the hopper.
2. If the optional 5- or 55-gallon drum attachment is used, empty when drum is 2/3 full.
3. If optional slide gate is used, close gate before servicing drum.
4. Reinstall drum and open gate.

Troubleshooting

Problem	Probable Cause	Remedy
Blower fan and motor do not start	Improper motor wire size	Rewire using the correct wire gauge as specified by national and local codes.
	Not wired correctly	Check and correct motor wiring for supply voltage. See motor manufacturer's wiring diagram. Follow wiring diagram and the National Electric Code.
	Unit not wired for available voltage	Correct wiring for proper supply voltage.
	Input circuit down	Check power supply to motor circuit on all leads.
	Electrical supply circuit down	Check power supply circuit for proper voltage. Check for fuse or circuit breaker fault. Replace as necessary.
Blower fan and motor start, but do not stay running	Incorrect motor-starter installed	Check for proper motor starter and replace if necessary.
	Access doors are open or not closed tight	Close and tighten access doors.
	Hopper discharge open	Install slide gate or drum cover arrangement to hopper discharge. See Hopper Attachments on Page 11.
	Blower fan damper control not adjusted properly	Check airflow in duct. Adjust damper control until proper airflow is achieved and the blower-motor's amp draw is within the manufacturer's rated amps.
	Inlet too large for collector rating.	Contact Donaldson.
	Electrical circuit overload	Check that the power supply circuit has sufficient power to run all equipment.

Problem	Probable Cause	Remedy
Insufficient airflow	Fan rotation backwards	Proper fan rotation is clockwise when looking down at the blower motor. See Preliminary Start-Up Check on Page 26.
	Access doors open or not closed tight	Check that all access doors are in place and secured. Check that the hopper discharge opening is sealed and that optional attachments are installed correctly. See Hopper Attachments on Page 11.
	Fan exhaust area restricted	Check fan exhaust area for obstructions. Remove material or debris. Adjust damper flow control.
	Dust storage area overfilled or plugged	Clean out dust storage area. See Dust Disposal on Page 29.
	Collapsed or plugged duct	Clean duct of all debris. Replace collapsed duct.
	Improper duct sizing	Contact Donaldson for assistance.
	EZ Filter Pack plugged	Shake filter packs a minimum of once a day. Brush or manually clean filter packs plugged with sticky or fibrous material. Replace filter packs that do not clean properly by shaking. See EZ Filter Pack Installation on Page 27.
	Manual shaker mechanism malfunctioning	Check that the roll pin is in place. Replace if necessary.
Automatic shaker mechanism not working	Mechanical binding or debris in mechanism	Check and clean obstruction or debris from the shaker mechanism.
	No voltage to the transformer	Check supply voltage at transformer Terminals H1 and H4. If no voltage is present, check fuses and replace as necessary. Check and repair supply lines.
	No voltage from the transformer	Check for 115-Volt output at transformer Terminals X1 and X2. If no voltage is present, replace transformer. See Automatic Shaker Wiring Diagram on Page 24.

Troubleshooting continued

Problem	Probable Cause	Remedy
Automatic shaker mechanism not working continued	Delay-on-make timer	Check input voltage to the delay-on-make timer's Terminal D1. After the 60-second delay, check for voltage on Terminal D2. If input voltage is present, but no output voltage, replace the delay-on-make timer.
	Interval timer	After the 60-second delay, check for voltage at the interval timer Terminal T1. If input voltage is present, check output voltage at Terminal T2. Replace interval timer if no output voltage is present. See Automatic Shaker Wiring Diagram on Page 24.
	Shaker motor relay	Locate the motor relay under the shaker cover. Check input voltage at the relay's Terminal 4, wait the 60-second delay and check output voltage on the relay Terminal 2. Replace the relay if no output voltage is present.
	Capacitor	Check input voltage to the capacitor's input terminal. After the 60-second delay, check for voltage on the output terminal. If input voltage is present, but no output voltage, replace the capacitor. See Automatic Shaker Wiring Diagram on Page 24.
	Defective shaker motor	Check input voltage to the shaker motor. Check and repair loose or worn terminal connectors. If voltage, terminals, and components are good, replace shaker motor. See Automatic Shaker Wiring Diagram on Page 24.
Shaker motor runs, but filter pack is not being cleaned	Shaker motor and shaker bar coupling damaged, loose, or missing	Lockout electrical circuit and remove the bottom door assembly. Check that the coupling that connects the shaker motor to the shaker bar is secure. Tighten the set screws in the coupling to the shaft flats if necessary. Replace damaged components.
Shaker motor tries to start, but blows fuse	Debris lodged in shaker mechanism	Lockout electrical supply and remove the bottom door assembly. Check for and remove debris. Check that EZ filter pack is installed properly. See EZ Filter Pack Installation on Page 27. Adjust the shaker bar by loosening the set screws joining the shaker motor and shaker bar. Adjust gap between shaker bar and cabinet walls equally. Tighten set screws. Replace fuse.

Service Notes

Date	Service Performed	Notes

The Donaldson Torit Warranty

Donaldson Company, Inc. warrants to the original purchaser that for a period of ten (10) years from the date of shipment, the product described herein shall be free from defects in materials and workmanship if properly installed, maintained and operated under normal conditions. Donaldson Company makes no warranty against damage due to corrosion, abrasion, normal wear and tear, modification or misapplication and makes no warranty whatsoever as to any goods manufactured or supplied by others. After Donaldson Company has been given adequate opportunity to remedy any defects in material or workmanship, Donaldson Company retains the option to accept the return of the product, with return freight paid by the purchaser, and to refund the purchase price for the product after confirming the product is returned undamaged and in usable condition. Such a refund will be the full extent of Donaldson Company's liability and Donaldson Company shall not be liable for any other costs, expenses or damages whether direct, indirect, consequential or otherwise. The terms of this warranty may be modified only by a special warranty document signed by a Director, General Manager or Vice President of Donaldson Company. Failure to use genuine Donaldson replacement parts will cancel this warranty. THERE EXIST NO OTHER REPRESENTATIONS, WARRANTIES OR GUARANTEES EXCEPT AS STATED IN THIS PARAGRAPH AND ALL OTHER WARRANTIES INCLUDING MERCHANTABILITY AND FITNESS FOR A PARTICULAR PURPOSE, WHETHER EXPRESS OR IMPLIED ARE HEREBY EXPRESSLY EXCLUDED AND DISCLAIMED.

Parts and Service

For genuine Donaldson Torit replacement filters and parts, call the Parts Express Line

800-365-1331

www.donaldsontorit.com

For faster service, have unit's model and serial number, part number, description, and quantity available.

Donaldson.
Filtration Solutions

Donaldson Company, Inc.
Industrial Air Filtration
P.O. Box 1299
Minneapolis, MN 55440-1299
dustmktg@mail.donaldson.com

Donaldson Company, Inc. is the leading designer and manufacturer of dust, mist, and fume collection equipment used to control industrial-air pollutants. Our equipment is designed to help reduce occupational hazards, lengthen machine life, reduce in-plant maintenance requirements, and improve product quality.

© 2002 Donaldson Company, Inc.
IOM-75094-01 Revision 4
Printed in USA
August 2002

"Parker, Tobias" <Tobias.Parker@strand.com>

07/09/2008 05:49 PM

To <Jason.Hurt@amwater.com>
cc "Keil, Chris" <Chris.Keil@strand.com>
bcc
Subject Owenton WTP - Design Criteria Letter

History: This message has been replied to and forwarded.

Jason,

I've attached the Design Criteria letter. Please review and provide comment. A hard copy of this letter is also being sent by post.

-Tobias Design Criteria Letter.pdf

STRAND
ASSOCIATES, INC.®
ENGINEERS

Waterfront Plaza
Suite 710
325 West Main Street
Louisville, KY 40202
Phone: 502-583-7020
Fax: 502-583-7026

Office Locations

Madison, WI
Joliet, IL
Louisville, KY
Lexington, KY
Mobile, AL
Columbus, IN
Columbus, OH
Indianapolis, IN
Milwaukee, WI
Cincinnati, OH

www.strand.com

July 9, 2008

Jason Hurt, P.E., Project Manager
Kentucky American Water
2300 Richmond Road
Lexington, KY 40502

Re: Owenton Water Treatment Plant Chemical Feed System Improvements and Chlorine Scrubber

Dear Jason,

This letter presents the proposed design criteria for the Owenton Water Treatment Plant (WTP) Chemical Feed System Improvements and Chlorine Scrubber. The revised design criteria are based on the following items:

- September 2006 Preliminary Engineering Report (PER).
- Requested changes in scope as indicated in Amendment No. 1.
- Discussions with Kentucky American Water personnel.
- Discussions with chemical suppliers.
- Analysis of the latest Owenton WTP operational data.

Please review and provide comments to the design changes described below so that your comments can be incorporated into the design. If no comments are provided within a week of the date of this letter, we will then assume that design criteria is approved and design will proceed as described below.

Proposed Chemical Building

The five chemical systems listed in the PER are ferric chloride, caustic soda, hydrofluorosilicic acid, sulfuric acid, and corrosion inhibitor.

We suggest that four of the PER chemical systems, ferric chloride, caustic soda, hydrofluorosilicic acid, and sulfuric acid be housed in a new chemical building. According to the International Building Code (IBC) 2006, these chemicals should receive a hazardous occupancy rating of H-4. Based on this rating, certain hazardous building code, HVAC, and fire code requirements should apply. To reduce the costs associated with these requirements, we suggest installing these chemical systems in the new building in separate containment rooms. Figure 1 shows the proposed location of the new chemical building.

STRAND ASSOCIATES, INC.® ENGINEERS

Typically, corrosion inhibitor chemicals are a proprietary blend of polyphosphate and orthophosphate chemicals. These corrosion inhibitor chemicals are typically nonhazardous and can be placed in the existing fluoride chemical room after the fluoride chemical system is moved to the new chemical feed building.

Monthly Chemical Storage Requirements

The Owenton WTP operates at a constant raw water feed of approximately 1 mgd. In 2007, the WTP operated on an average 19 hours per day, and the operating hours ranged from 14 to 24 hours per day. The average filter backwash volume was approximately 8 percent of the raw water flow (ranges from 6 to 11 percent). Table 1 is a summary of the plant flows. These flows are used to develop the proposed chemical storage requirement as shown in Table 2.

	Operating Hours per Day	Raw Water Flow (mgd)	Average Filter Backwash Flow[1] (mgd)	Calculated Finished Water[2] (mgd)
Minimum	14	0.6	0.05	0.54
Average	19	0.8	0.06	0.73
Maximum	24	1.0	0.08	0.92

[1]Assumes 8% of raw water flow.
[2]Finished water is calculated as the difference of raw water and filter backwash flows.

Table 1 Average Daily Flows in 2007

Chemical	Concentration (%)	Monthly Bulk Storage Tank Capacity (gal)	Day Tank Storage Capacity (gal)
Ferric Chloride	40	5,000	180
Caustic Soda	50	900	40
Fluoride	23	55 gallon drums	N/A
Sulfuric Acid	38	300 gallon tote	N/A
Corrosion Inhibitor	Proprietary	55 gallon drums	N/A

Table 2 Proposed Chemical Storage Requirements

The chemical quantities in Table 2 are based on the latest operating data, bulk chemical delivery quantities, and discussions with KAW personnel and chemical suppliers. A detailed discussion of the design criteria is provided below.

A. <u>Ferric Chloride</u>

Ferric chloride solution has been the primary coagulant at the Owenton WTP since 2004. The original coagulant design was based on feeding alum as a coagulant. In the summer of 2007, the Owenton WTP experimented with a ferric chloride-polymer solution for coagulant addition. By the beginning of 2008, the Owenton WTP resumed feeding a

typical ferric chloride solution. KAW requested that the coagulant feed system design be based on a typical ferric chloride solution.

The latest Owenton WTP data indicates that approximately 3,000 gallons of ferric chloride solution is delivered to the treatment plant every six to eight weeks. According to the ferric chloride supplier (Kemiron), the chemical delivery truck could deliver approximately 4,000 gallons to the treatment plant.

We suggest that the new ferric chloride system be placed in a separate chemical room in the new chemical building, and the ferric chloride bulk storage be designed with a capacity of 5,000 gallons (125 percent of full load according to T-2 American Water System Engineering Standards).

In 2007, the average ferric chloride (without polymer) dose was 114 ppm as wet chemical, and the maximum ferric chloride (without polymer) dose was 251 ppm as wet chemical. Based on the T-2 American Water System Engineering Standards, the ferric chloride day storage tank should be designed with a capacity of approximately 180 gallons (assumes greater than 125 percent of maximum dose at average raw water flow).

The proposed ferric chloride chemical system will include a HDXLPE bulk storage tank with ultrasonic level sensor, two manually-operated transfer pumps for redundancy, a day tank on scale, and a minimum of two manually-operated chemical feed pumps for redundancy. Tanks will include high and low level alarms. Tank levels and weights will be outputted to a SCADA system. New piping and appurtenances will be installed from the new chemical feed building to the application point. Chemical pipes will be double-walled from the chemical containment area to the chemical application point.

B. Caustic Soda

Currently, the Owenton WTP uses 50 percent caustic solution from the spring through the fall and 25 to 30 percent caustic solution during the winter months to avoid freezing of the 50 percent caustic solution. KAW has requested design improvements to utilize 50 percent solution throughout the year. The 2007 Owenton WTP operational data indicates an average of 3,400 pounds of caustic soda (540 gallons of 50 percent caustic solution) and a maximum of 4,400 pounds (700 gallons of caustic solution) was used per month. In 2007, the average daily dose was 15 ppm. The maximum daily dose of 27 ppm as dry caustic (89 ppm as 30 percent caustic solution) occurred April 12, 2007.

We suggest placing the new caustic soda feed system in a separate chemical room in the new chemical building. Based on the T-2 American Water System Engineering Standards, the caustic bulk storage tank should be designed with a capacity of approximately 900 gallons of a 50 percent caustic solution (assumes maximum dose at average raw water flow and 31 days storage).

Based on the T-2 American Water System Engineering Standards, the caustic day storage tank should be designed with a capacity of approximately 40 gallons of 50 percent caustic solution (assumes greater than 125 percent of maximum dose at average raw water flow).

The caustic soda chemical system will include a HDXLPE bulk storage tank with ultrasonic level sensor, one manually-operated transfer pump, one on-the-shelf transfer pump, a day tank and scale, one manually-operated chemical feed pump and one spare chemical metering pump. Tanks will include high and low level alarms. Tank levels and weight will be outputted to a SCADA system. New piping and appurtenances will be installed from the new chemical feed building to the application point. Chemical pipes will be double-walled from the chemical containment area to the chemical application point. Buried piping in the yard will be heat traced for frost protection of the 50 percent caustic solution.

C. Hydrofluorosilicic Acid

According to KAW staff, the natural background concentration of fluoride in the raw water source is approximately 0.3 ppm fluoride. On average, the existing fluoride system feeds approximately 0.7 ppm fluoride to meet the 1 ppm fluoride secondary standard. In Kentucky, the fluoride concentration should be maintained between 0.9 to 1.4 ppm (902 KAR 115:010). It is assumed that the new hydrofluorosilicic acid feed system will be designed based on a fluoride feed concentration of 0.6 to 1.1 ppm and a maximum daily raw water flow of 1 mgd. The average daily usage ranges from 2.1 to 3.1 gallons per day, or a monthly usage range of 65 to 92 gallons per month.

We suggest placing the hydrofluorosilicic acid feed system in a separate chemical room in the new chemical building, and the hydrofluorosilicic acid be fed from drums.

The hydrofluorosilicic acid chemical system will include a drum scale, one manually-operated chemical metering pump, and one spare chemical metering pump. The drum scale will include a low level alarm. The drum weight will be outputted to a SCADA system. New piping and appurtenances will be installed from the new chemical feed building to the application point. Chemical pipes will be double-walled from the chemical containment area to the chemical application point.

D. Sulfuric Acid

Sulfuric acid is currently not fed at the Owenton WTP. According to KAW staff, sulfuric acid was added to optimize the removal of organics when feeding ferric chloride and polymer. KAW anticipates that sulfuric acid should only be added during the summer months when organic concentrations may increase. KAW expects an average feed concentration of 4 ppm and a maximum of 14 ppm of 38 percent sulfuric solution would be added. At the maximum daily raw water flow, the 38 percent sulfuric solution feed

would range from 2.2 gallons to 7.6 gallons per day (68 to 236 gallons per month). KAW requested that this system be designed to be fed from chemical totes.

We suggest placing the sulfuric acid feed system in a separate chemical room in the new chemical building, and the sulfuric acid be fed from totes.

The sulfuric acid chemical feed system will include a tote scale, one manually-operated chemical metering pump, and one spare chemical metering pump. The tote scale will include a low level alarm. The tote weight will be outputted to a SCADA system. All applicable piping and appurtenances will be included in the budgetary estimate from the new chemical feed building to the application point. Chemical pipes will be double-walled from the chemical containment area to the chemical application point.

E. Corrosion Inhibitor

Corrosion inhibitor is currently not fed at the Owenton WTP. One advantage of adding a corrosion inhibitor at the WTP versus other corrosion prevention methods is the reduction of caustic soda addition to the finished water. KAW's recommended chemical supplier proposes using a 1 ppm feed rate for corrosion inhibitor. Experience has shown that most corrosion inhibitor chemical feed concentrations range from 0.5 to 1.5 ppm, and the optimal corrosion inhibitor chemical used varies for each raw water source.

We suggest placing the new corrosion system in the existing building in the former fluoride room and suggest that the corrosion inhibitor chemicals be fed from drums. The corrosion inhibitor feed system will be designed based on a 0.5 to 2 ppm feed range to allow usage of different types of corrosion inhibitors and feed rates.

The corrosion inhibitor chemical feed system will include a drum scale and one manually-operated chemical metering pump, and one on-the-shelf spare chemical metering pump. The drum scale will include a low level alarm. The drum weight will be outputted to a SCADA system. All applicable piping and appurtenances will be included in the budgetary estimate from the new chemical feed building to the application point.

Emergency Chlorine Gas Scrubber System

During the April 10, 2008 project kickoff meeting, it was discussed that the emergency chlorine gas scrubber system would be installed adjacent to the new chemical feed building. We anticipate that the existing chlorine room will connect to the emergency chlorine gas scrubber system through a buried air duct that terminates through the existing chlorine room floor.

KAW has requested that the new emergency chlorine gas scrubber system be an Emergency Gas Scrubber (EGS)–FOC5 as manufactured by PURAFIL. KAW has requested that the chlorine scrubber be designed for the release of the contents of one

150 pound chlorine gas cylinder based on the requirements of section II.D.9 Gas Scrubbers in the T-9 American Water Systems Engineering Standards.

Design and/or Modifications to Two Existing Chemical Systems

As requested by KAW, Strand will evaluate and provide a design for the existing Powder Activated Carbon (PAC) and potassium permanganate feed system.

It is assumed that these systems will not be placed in the new chemical building.

A. Powder Activated Carbon (PAC) System

Strand has evaluated the options for the existing PAC system and has included its findings in a separate letter.

The design of additional PAC feed equipment is not included in this project.

B. Sodium Permanganate

During the project kickoff meeting, KAW expressed an interest in replacing the existing potassium permanganate feed system at the Lake Water Pump Station with a liquid sodium permanganate feed system. According to KAW, the potassium permanganate is fed only when water is pumped from the lake, and normally, the river water is pumped directly to the treatment plant unless a rain event causes high solids concentration in Severn Creek. KAW estimated that on average the potassium permanganate addition is approximately 400 pounds per month when pumping from the lake.

We suggest placing the sodium permanganate in a separate chemical feed building with separate containment and HVAC system, and the sodium permanganate be fed from drums.

At the request of KAW, the sodium permanganate chemical feed system will not be included in the new chemical building and improvements plan. KAW has requested design criteria, equipment selection, and budgetary cost for equipment be provided.

The sodium permanganate chemical equipment will include a drum scale, one manually-operated chemical metering pump, and one spare chemical metering pump. The drum scale will include a low level alarm.

Access Road Improvements for Bulk Chemical Delivery

During the project kickoff meeting, KAW expressed an interest in improving the access road to the WTP to accommodate the large trucks that deliver ferric chloride there.

STRAND ASSOCIATES, INC.®
ENGINEERS

According to the ferric chloride supplier, the chemical delivery truck has an approximate load weight of 80,000 pounds and is approximately 80 feet long in length.

We suggest that the existing access road be widened near the treatment plant, the retaining wall below the clearwell be moved further away from the existing treatment building, and the vehicle access road to the clearwell be regraded and paved. These improvements should provide sufficient area for the chemical delivery truck to back into the paved vehicle access to the clearwell and turn around to leave the treatment plant. Figure 1 shows the proposed access road modifications.

If you have any questions concerning the information in this letter, please feel free to give me a call.

Sincerely,

STRAND ASSOCIATES, INC.

Tobias Parker, P.E.

Enclosure(s)

c/enc.: Chris Keil, P.E.
Brian Hackman, P.E.

TJP:das\S:\LOU\5400--5499\5493\107\Wrd\Letter with Revised Design Criteria.doc

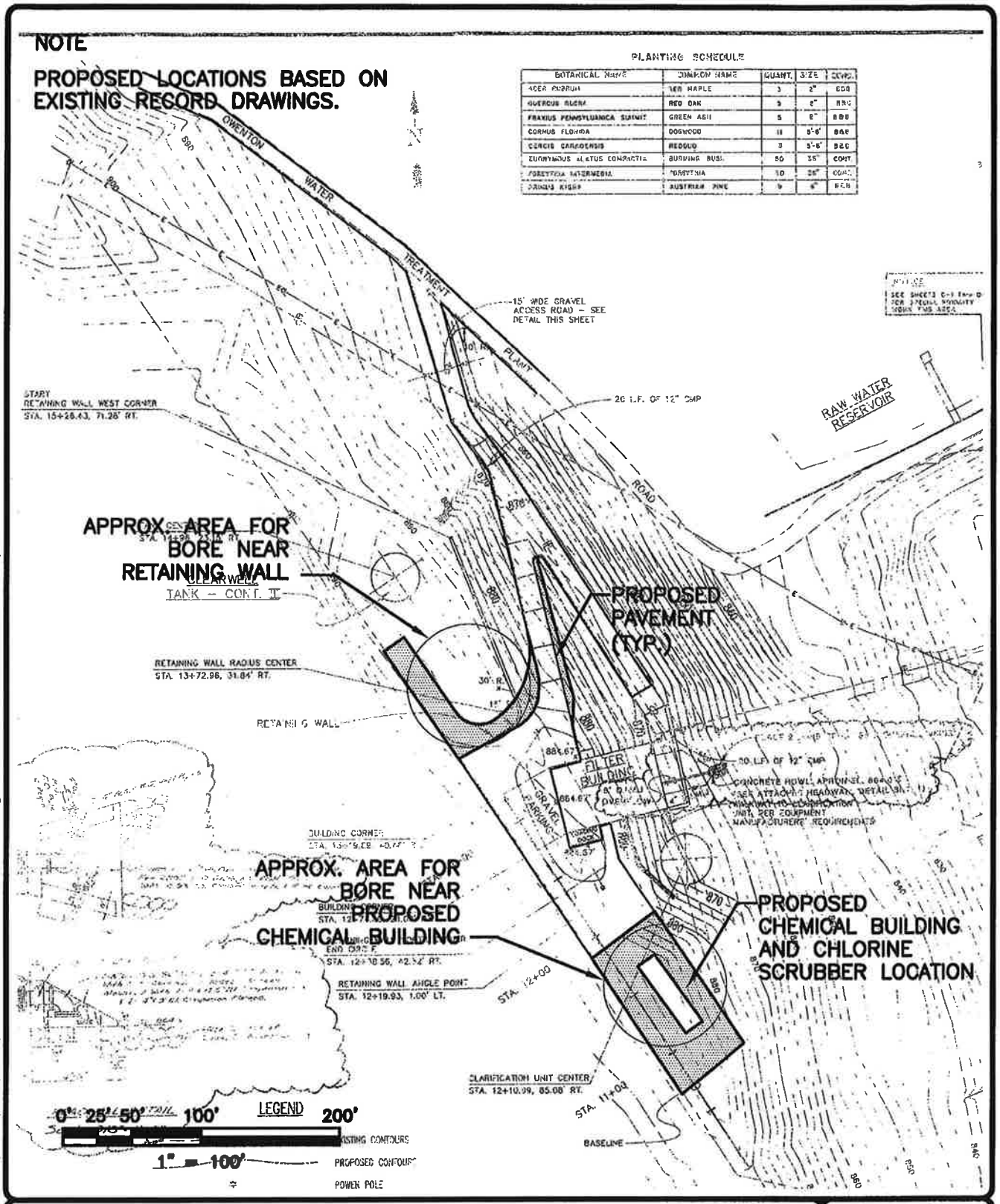

BOTANICAL NAME	COMMON NAME	QUANT.	SIZE	COND.
ACER RUBRUM	RED MAPLE	3	2"	B&B
QUERCUS RUBRA	RED OAK	5	2"	B&B
FRAXINUS PENNSYLVANICA SUPREME	GREEN ASH	5	2"	B&B
CORNUS FLORIDA	DOGWOOD	11	5'-6'	B&B
CERCIS CANADENSIS	REDBUD	3	5'-6'	B&B
EUONYMOUS ALATUS COMPACTA	BURNING BUSH	50	15"	CONT.
FORSYTHIA INTERMEDIA	FORSYTHIA	10	15"	CONT.
PINUS NIGRA	AUSTRIAN PINE	9	6'	B&B

PROPOSED ACCESS ROAD PAVEMENT &
PROPOSED LOCATION OF NEW CHEMICAL BUILDING

OWENTON WATER TREAMENT PLANT CHEMICAL FEED SYSTEM IMPROVEMENTS AND CHLORINE SCRUBBER
KENTUCKY AMERICAN WATER
OWENTON, KENTUCKY

STRAND ASSOCIATES, INC.® ENGINEERS

FIGURE 1
5493.107

File: S:\LOU\5400—5499\5493\107\Acad\Access Road on Old Site Plan.dwg Time: Jul 09, 2008 – 2:46pm

"Parker, Tobias" <Tobias.Parker@strand.com >

07/22/2008 10:28 AM

To <Jason.Hurt@amwater.com>

cc "Keil, Chris" <Chris.Keil@strand.com>, "Correspondence File - Louisville" <CorrespondenceFile-Louisville@strand.com>

bcc

Subject 5493.107 - Corrosion Inhibitor in new Chemical Building

Jason,

Per your request, the corrosion inhibitor chemical system will be placed in the new chemical building.

As we discussed, I have attached the MSDS for a corrosion inhibitor chemical that was suggested by David (KAW). Please note that under Section 2 - Hazardous Ingredients of the SEAQUEST "Liquid" MSDS that SEQUEST is "Not classified as a "Hazardous Material" in normal use as defined in 29 CFR section 1910.1200."

Also note, that Strand is only providing the information for the SEAQUEST chemical per your request.

It is recommended that KAW select a corrosion inhibitor chemical based on the performance of the corrosion inhibitor on the Owenton Water Treatment Plant finished water.

Thanks,

Tobias

20080722090326.pdf

Aqua Smart, Inc.

4445 Commerce Dr. SW. Suite A4
Atlanta, GA. 30336-1962

E-MAIL: AQUASMART1@AOL.COM

Phone: (404) 696-4406
Fax: (404) 696-3712

SeaQuest Liquid

Drinking Water Additive

SPECIFICATIONS

Appearance	Clear to slightly hazy
Activity	3.9 pounds/gallon
Color	Colorless
Odor	None
Specific Gravity	1.300 - 1.350
Density	11.10 - 11.30
pH	4.8 - 5.5
P_2O_5	20.7 - 22.4 %
PO_4	25 % Minimum
Sodium	7.9 - 8.6 %
Polyphosphate	26.2 - 26.9 %
Orthophosphate	7.6 - 7.9 %
Fluorides	5 ppm max.
Silicates (as SiO_2)	0.0 %
Potassium	0.0 %

Stability to heat reversion	Complete up to 375° F
Sequestering equivalency in use	
1 ppm Fe/Mn/Cu/Pb	1 ppm SeaQuest
200 ppm Ca/Mg	1 ppm SeaQuest
Film formation on metal pipe in use	Monomolecular (non-building)
Scale/corrosion removal in use	Complete
Operating pH range	5-11

SEAQUEST "Liquid"

MATERIAL SAFETY DATA SHEET

Health [0] Flammability [0]
Reactivity [0]
Personal Protection-[gloves and goggles as needed]

Manufacturer's Name:
AQUA SMART, INC.

Emergency Telephone No.
404-696-4406

Address:
4445 COMMERCE DR. SW. STE. A-4
ATLANTA, GA. 30336-1962

Other Information Calls:
404-696-4406

Signature of Person Responsible for Preparation:

Date Prepared: 01/01/2005

SECTION 1 - IDENTITY

Common Name: (used on label)
(Trade Name & Synonyms) **SEAQUEST "Liquid"**

Chemical Name: Not applicable

Chemical Family: Blend of inorganic phosphates

Formula: Liquid-Potable water treatment compound for corrosion and scale control

SECTION 2 - HAZARDOUS INGREDIENTS

Principal Hazardous Component (s)	CAS No.	% by Weight	Threshold Limit Value

Not classified as a "Hazardous Material" in normal use as defined in 29 CFR section 1910.1200

Maximum use level in potable water = 28.0 mg/l

SECTION 3 - PHYSICAL & CHEMICAL CHARACTERISTICS (Fire & Explosion Data)

Boiling Point: Not Applicable	Specific Gravity: 1.300-1.350	Vapor Pressure: Not applicable (mm Hg)
Percent Volatile by Volume (%): 65%	Vapor Density (Air=1): Not applicable	Evaporation Rate (ether=1): Not applicable

Solubility in water: 300 parts in 100 parts of water Reactivity in water: None

Appearance and Odor: Clear to slightly hazy, colorless, odorless liquid

Flash Point: None	Flammable: Lower Upper Limits: Not applicable	Extinguisher Media: Not applicable

Auto-Ignition Temperature: Not applicable

Special Fire Fighting Procedures: Not applicable

Unusual Fire and Explosion Hazards: If spilled in fire areas, flush with water to avoid slipperiness.

SECTION 4 - PHYSICAL HAZARDS

Stability: Unstable [ ] Stable [X] Conditions to avoid: None

Incompatibility: (Materials to avoid) None

Hazardous Decomposition Products: None

SECTION 5 - HEALTH HAZARDS

Threshold Limit Value: Not applicable

Signs and Symptoms of Exposure 1. Acute Overexposure: Slight eye irritant

2. Chronic Overexposure: May cause spotty surface blistering on sweaty, moist skin or on frequent repeated prolonged skin contact.

Medical Conditions Generally Aggravated by Exposure: None known

Chemical Listed as Carcinogen or potential carcinogen:

NTP	I.A.R.C.	OSHA
Yes [ ] No [X]	Yes [ ] No [X]	Yes [ ] No [X]

OSHA Permissible Exposure Limit: Not applicable

ACGIH Threshold Limit Used: Not applicable

Other Exposure Limit Used: Not applicable

Emergency and First Aid Procedures:

1. Inhalation: No emergency care anticipated
2. Eyes: In case of contact, flush with plenty of water for 15 minutes.
   If irritation persists, get medical attention.
3. Skin: In case of contact, wash with soap and water
   If irritation persists, get medical attention.
4. Ingestion: No emergency care anticipated. Treat symptomatically.

SECTION 6 - SPECIAL PROTECTION INFORMATION

Respiratory Protection (Specify Type) : None required in normal use

Ventilation: Local Exhaust: Adequate
Mechanical (General): Not required
Special: None
Other: None

Protective Gloves: Gloves to avoid skin contact
Eye Protection: Goggles
Other Protective Clothing: None required

SECTION 7 - SPECIAL PRECAUTIONS AND SPILL/LEAK PROCEDURES

Precautions to be Taken in Handling and Storage: Keep dry in storage

Other Precautions: Keep container closed when not in use

Steps to be Taken in Case Materials is Released or Spilled: If spilled, sweep up to nearest waste container

Waste Disposal Methods: To dispose of, check with Federal, State and local regulations

Aqua Smart, Inc.

CORROSION, SCALE AND DEPOSIT CONTROL

4445 Commerce Drive, SW; Suite A-4
Atlanta, Georgia 30336

Email: aquasmart1@aol.com / Web: aquasmartinc.com

Phone: (404) 696-4406
Fax: (404) 696-3712

SEAQUEST LIQUID TREATMENT CHART

FINISHED WATER TREATMENT FORMULA

$$[CaCO_3 \div 200] + Fe + Mn + Zn + 0.15 = \text{SeaQuest Treatment Dose}^*$$

1. SeaQuest Treatment Dose (Above) x 8.34 = SeaQuest Dry Pounds Needed Per MGallons Water.
*(Units of Dosage are PPM or mg/liter)

2. SeaQuest Dry Pounds Needed per MGallons ÷ 3.9** = SeaQuest Liquid Gallons Needed Per MGallons.
(**There are 3.9 Pounds of Active SeaQuest per Gallon).

3. SeaQuest Liquid Gallons Per MGallons Water x The Daily Volume of Water Processed = SeaQuest Liquid Gallons Required each Day.

*** Regardless of water quality, SeaQuest should not be dosed at a rate below 0.5 PPM or mg/l**

IF YOU HAVE ANY QUESTIONS, CONTACT YOUR AQUA SMART TECHNICAL REPRESENTATIVE

Family Tree

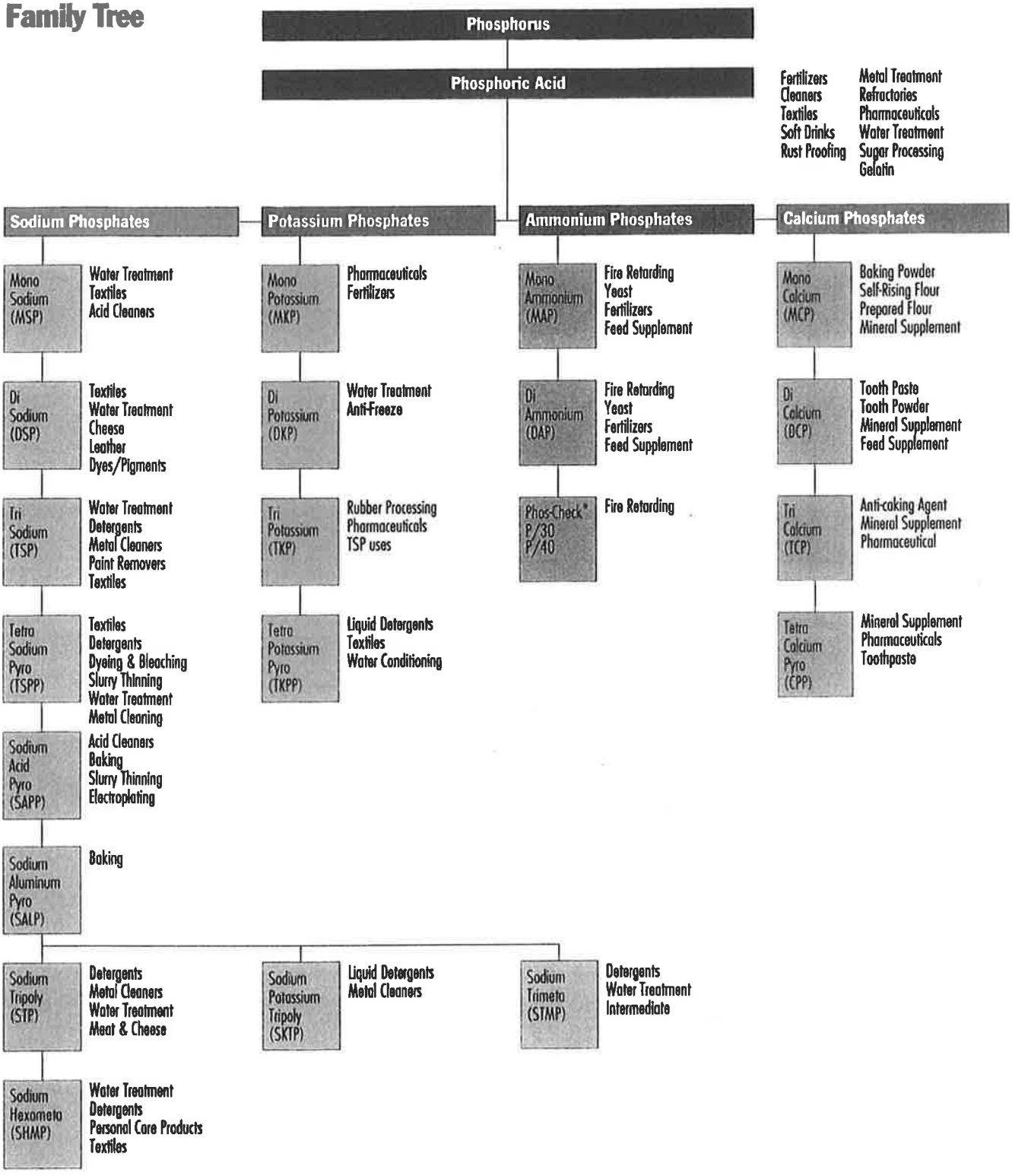
Phosphorus
Phosphoric Acid
Fertilizers
Cleaners
Textiles
Soft Drinks
Rust Proofing
Metal Treatment
Refractories
Pharmaceuticals
Water Treatment
Sugar Processing
Gelatin
Sodium Phosphates
Potassium Phosphates
Ammonium Phosphates
Calcium Phosphates
Mono Sodium (MSP)
Water Treatment
Textiles
Acid Cleaners
Di Sodium (DSP)
Textiles
Water Treatment
Cheese
Leather
Dyes/Pigments
Tri Sodium (TSP)
Water Treatment
Detergents
Metal Cleaners
Paint Removers
Textiles
Tetra Sodium Pyro (TSPP)
Textiles
Detergents
Dyeing & Bleaching
Slurry Thinning
Water Treatment
Metal Cleaning
Sodium Acid Pyro (SAPP)
Acid Cleaners
Baking
Slurry Thinning
Electroplating
Sodium Aluminum Pyro (SALP)
Baking
Sodium Tripoly (STP)
Detergents
Metal Cleaners
Water Treatment
Meat & Cheese
Sodium Hexameta (SHMP)
Water Treatment
Detergents
Personal Care Products
Textiles
Mono Potassium (MKP)
Pharmaceuticals
Fertilizers
Di Potassium (DKP)
Water Treatment
Anti-Freeze
Tri Potassium (TKP)
Rubber Processing
Pharmaceuticals
TSP uses
Tetra Potassium Pyro (TKPP)
Liquid Detergents
Textiles
Water Conditioning
Sodium Potassium Tripoly (SKTP)
Liquid Detergents
Metal Cleaners
Mono Ammonium (MAP)
Fire Retarding
Yeast
Fertilizers
Feed Supplement
Di Ammonium (DAP)
Fire Retarding
Yeast
Fertilizers
Feed Supplement
Phos-Check® P/30 P/40
Fire Retarding
Sodium Trimeta (STMP)
Detergents
Water Treatment
Intermediate
Mono Calcium (MCP)
Baking Powder
Self-Rising Flour
Prepared Flour
Mineral Supplement
Di Calcium (DCP)
Tooth Paste
Tooth Powder
Mineral Supplement
Feed Supplement
Tri Calcium (TCP)
Anti-caking Agent
Mineral Supplement
Pharmaceutical
Tetra Calcium Pyro (CPP)
Mineral Supplement
Pharmaceuticals
Toothpaste

UNIQUE PROPERTIES OF SEAQUEST

THERMAL STABLITY

Stable above 300 F
Limited reversion to ortho-phosphate
Metal ions w/ +2 Valence remain sequestered

CLEAN OUT

Control of the Clean out rate
Removes bio-film sites
When complete, corrosion inhibition may begin
Effective throughout system, home, and business

CORROSION

Inhibition begins when metal surfaces are clean
Chemical reaction forms Iron Phosphate

SEQUESTRATION

Both hard & soft metals w/ +2 valences at same pH
More effective w/ control of polymer chain length
Further enhanced w/ Proprietary SQ-547 technology

CHEMICAL STABILITY

Effective performance over wide pH range – 5 to 11

Aqua Smart, Inc.
CORROSION, SCALE AND DEPOSIT CONTROL
4445 Commerce Dr. SW, Suite A-4
Atlanta, Georgia 30336
www.aquasmartinc.com
email: h2osmart@aol.com
Phone: (404) 696-4406
Fax: (404) 696-3712

EVALUATION OF THE PERFORMANCE OF SEAQUEST:

First Month

1.) **Reduction of Discolored Water Complaints**
2.) **Decrease in Color levels**
3.) **Decrease in NTU levels**

Within Three Months

4.) **Reduction of Time to Clear the Lines During Flushing**
5.) **Reduction in Gallons Wasted**
6.) **Increase in Chlorine Residuals**
7.) **Residuals easier to maintain**
8.) **Water feeling softer (Reduction in Hard Water Complaints)**
9.) **Less scale complaints about cooking utensils (pots and pans)**

Within Six Months

10.) **Decreases in Chlorine Usage**
11.) **System-Wide Clean out begins to become noticeable:**
   a.) **Color change in tuberculation -brighter reds turn darker**
   b.) **Heavy flushes produce more deposits but without colored water complaints**
   c.) **If pipe-cut out is tapped on either end, weighed & photographed and replaced now, six months later may show that pipe weighs less and tuberculation will be visibly less**

Within 12 Months

12.) **Lead and Copper levels brought within E.P.A. compliance**
13.) **Observed Flow Increase**

Within 18 Months

14.) **Scale Deposits gone from showers, faucets, meters, hot water heaters, valves, impellers, etc.**
15.) **Tuberculation clean-out approximately 85%**
16.) **Heavy Scale Deposits clean-out approximately 65%**

Aqua Smart, Inc. is the exclusive manufacturer of SeaQuest a N.S.F. certified product

Third Generation Technology

Generation 1:

Sodium Hexametaphosphates

Polyphosphates that easily & quickly reverts to orthophosphate for **corrosion control**

Generation 2:

Blended commodity phosphates

Blended ortho- and poly-phosphates salts

18 Phosphates as in the Monsanto tree
Zinc Orthophosphate

All were also for **corrosion control**

Generation 3:

Blended phosphates also but technically enhanced by 18 years of technical research

This is not an arbitrary blend of ortho & polyphosphates
hence this is not a commodity phosphate.
SeaQuest is a specialty product, a unique enhanced level of technology

SeaQuest

A. Works within a pH range of 5 – 11
B. Thermally stable to 375º Fahrenheit (water boils at 212 º)
C. Sequesters at higher efficiency because the polymer chain links are controlled by the usage of only domestic phosphates

SeaQuest uses SQ 547, a proprietary technical modification to the polyphosphates that further enhances the efficiency.

Higher sequestration is achieved with much less product.

All other phosphate blends do provide corrosion control, a white powder coating; whereas, SeaQuest reacts with the iron in pipes to form a gray, impermeable layer of iron phosphate, formed by chemical reaction.

Δ SeaQuest - a multi-faceted product Δ

Sequestrant of all divalent metals; iron, manganese, calcium, et. al.

Cleans out and removes existing scale, tubercles and bio-film from pipes

Provides corrosion control by coating pipes and lines thus **removes the leaching ability of lead and copper**

"Parker, Tobias" <Tobias.Parker@strand.com >

08/06/2008 01:15 PM

To <Jason.Hurt@amwater.com>, <rick.buchanan@amwater.com>, <kevin.krushinski@amwater.com>

cc "Keil, Chris" <Chris.Keil@strand.com>

bcc

Subject **Owenton WTP Site and Building Plan Review - Meeting Minutes**

All,

I've attached meeting minutes to this email. Please review and provide comments.

Thanks,

Tobias Meeting Minutes 08-04-08.pdf

PLAN REVIEW MEETING NO. 1
Owenton Water Treatment Plant–Chemical Bulk Storage
Kentucky American Water
August 4, 2008, 10 A.M.

Present	Representing	Contact
Jason M. Hurt, P.E.	Kentucky American Water (Owner)	Tel: (859) 335-3415 Fax: (859) 335-3393
Rick Buchanan	Kentucky American Water (Owner)	Tel: (859) 335-3415 Fax: (859) 335-3393
Kevin Krushinski	Kentucky American Water (Owner)	Tel: (859) 335-3415 Fax: (859) 335-3393
Tobias Parker, P.E.	Strand Associates, Inc. (Engineer)	Tel: (502) 583-7020 Fax: (502) 583-7026
Chris Keil, P.E., Project Manager	Strand Associates, Inc. (Engineer)	Tel: (502) 583-7020 Fax: (502) 583-7026

The purpose of the meeting was to review the grading and site drawings and the building plan. After the meeting, the group visited the treatment plant.

These meeting minutes are based on the draft drawings discussed at the meeting. A copy of the draft plans is attached to this document.

TITLE PAGE

The group first discussed the title page of the drawings. Jason mentioned that instead of using a contract number, the number should read "PROJECT: 430916".

OVERALL SITE AND GRADING PLAN

A construction easement may be needed to do the grading and pavement improvements. Kevin and Rick said they do not know who the property owner is. The adjacent land owner gave Owenton the land for the water treatment plant 20 years ago. It is likely that a construction easement will not be a problem.

Kevin and Rick noted that the raw water line from the river is not shown on the site plan. The raw water line is located under the existing pavement and proposed pavement leading to the clearwell. There are no plans for the lake river water line. This line will most likely need to be relocated because of the regrading required around the clearwell.

Riprap at the bottom of the hill was discussed. More detail was provided concerning KAW's preferences in the area. Jason marked up the plan to move the rip rap further back on the hill. See attached drawings.

The yard piping locations are based on record drawings. Chris and Tobias asked if the piping shown on the drawings were located accurately. Kevin and Rick mentioned that the river water line needs to be shown.

STRAND ASSOCIATES, INC.® ENGINEERS

There is a chance that the clearwell piping between the access road and the retaining wall may be exposed because of a cut in the area. Chris and Tobias requested verification of the location and depth of the piping. Jason said that Strand should assume that clearwell piping is deep enough, so that it will not be affected by the design and proceed with design accordingly.

The property line extends beyond the fenced area south of the proposed chemical building. The contractor may need to utilize an area for equipment and fill dirt. Kevin, Rick and Jason stated that the area should not be used for fill. It should be assumed that fill will be hauled away. However, the contractor can use this area to store equipment.

There was some discussion regarding the truck movement plans. Kevin and Rick mentioned that the truck movement plan is okay as shown. KAW can specify to the chemical supplier that the chemical delivery trucks must have a length of hose that will reach the delivery points.

Jason noted that a guardrail and curb should be provided along the access road, and he requested that all existing pavement at the treatment plant be repaved, and that two headwalls be provided at the existing culverts laid under the access road near the fence gate and on the water treatment plant's lower road.

DEMOLITION PLAN AND CHEMICAL PIPING

The plan is to remove the existing ferric chloride tanks. The ferric chloride tanks are fairly large. Kevin and Rick mentioned that the contractor should remove the tanks. They will need to be cut into smaller pieces to be removed. After removing the existing tanks and equipment, the plan is to route the chemical piping and chlorine scrubber ducts through the existing ferric chloride tank room. The question was asked if there was any concern with routing the chemical piping and chlorine scrubber through the room. No consensus could be reached during the meeting. Several options were discussed during the treatment plant visit.

There was considerable discussion regarding the chlorine scrubber location and duct work. Kevin and Rick suggested that the chlorine scrubber could be moved just outside the ammonia room (see markups on plan set). After some investigation, it is likely that the chlorine scrubber location should be moved outside of the ammonia room and the duct work could be routed through the existing ammonia room. However, a few issues still need to be resolved with new duct work. Strand will examine the chlorine scrubber options further.

The group then discussed the options for routing the chemical piping through the building. These are discussed below.

<u>Option 1: Route Chemical Piping through the Ferric Chloride Room</u>

After removing the ferric chloride tanks there should be plenty of room for chemical piping. However, there are two concerns with this option. The ferric chloride system must remain in service while

construction occurs, which makes this option difficult. The raw water piping and Venturi meter is also located in this area.

Kevin suggested that the smaller ferric chloride tank could be removed from service during construction to provide better access, if needed.

Option 2: Route Chemical Piping through the Ammonia Room

Currently, the ammonia room is not being used. It may be possible to route the chemical piping through this room to the application points.

Option 3: Route Chemical Piping between Rapid Mix Room and Ammonia Room

There is a small space between the door to the rapid mix room and the ammonia room. This option may require piping to be placed aboveground before entering the building. Aboveground piping may not desirable because of temperature affects.

Option 4: Combine Options

A combination of the above options may also be utilized.

Strand will review the chemical piping options further.

Kevin requested that the existing concrete pad at the back of the chemical building be modified with a ramp to accommodate a pallet truck moving the carbon in and out of the existing building.

BUILDING PLANS AND SECTIONS

Rick mentioned that fiberglass doors are preferred. He also said that the fiberglass doors should be provided with windows. Windows should be made of materials that are compatible with a chemical environment. It has been Rick's experience that chemical rooms, such as fluoride, will etch into glass windows drastically reducing visibility.

A coiling overhead door is preferred. Coiling overhead doors should be provided on the corrosion inhibitor and fluoride rooms as well.

Manual doors are preferred for the overhead garage door.

The existing building has a 4:12 pitched roof with metal roofing. Jason noted that the building material for the new building should match the existing.

Precast plank ceilings are normally used for chemical rooms because of the corrosive and moist environments. Jason said this is acceptable.

Rick requested that a chemical containment sump should be provided outside the chemical delivery area. This sump is intended to provide a place for the chemical delivery truck to blow out the contents of the chemical hose. The containment sump should be grated at ground elevation, and a raised curb should be placed around the perimeter. A water proof lid should be installed on the curb to prevent rain water from gathering in the chemical containment sump.

Kevin requested that an additional transfer pump be installed for the caustic feed system, and that ultrasonic level sensors be provided for measuring chemical use in the day tanks in lieu of day tank scales. T-2 allows level or weight measurement.

Rick requested that interior lighting be designed to facilitate replacement of bulbs and ease of maintenance. He was also concerned with adequate exterior lighting around the proposed chemical building.

Kevin commented on the location of the eyewashes in the ferric chloride and caustic rooms. According to the T-2, "Eyewashes and/or emergency showers are to be located adjacent to the chemical equipment." Therefore, the current plan meets the T-2 requirement. After some further discussion, Tobias suggested that if the eyewash was placed in the containment area, the operator would need to stand in spilled chemical in order to use the eyewash if there was a leak. The current location of the eyewash does not require this.

Kevin requested that Strand call the caustic supplier to determine whether or not 1,000 gallons of 50 percent caustic can be delivered to the Owenton WTP. Strand contacted Univar the current supplier of the 50 percent caustic 55-gallon drums. Univar said that they could deliver 1,000 gallons of 50 percent caustic to the treatment plant. Strand inquired about the cost. Univar said that KAW would need to set up a contract for delivering a partial truck load to the treatment plant.

There was some discussion of the type of equipment being used at the treatment plant. On April 23, 2008, Jason sent a copy of some specifications from the Pool 3 WTP that list manufacturers of chemical feed system equipment. However, during several site visits to the Owenton WTP, it seems that there were some equipment preferences that were requested by the operators that may differ from the Pool 3 WTP specifications. Strand is compiling a preliminary list of equipment that will be used for generating budgetary cost for this phase of the project. It is anticipated that the final list of equipment will be generated during final design.

Kevin and Jason prefer moving the scrubber closer to the existing treatment building. The existing sidewalk/slab adjacent to the building appears to be feasible. Strand will investigate this location further.

SCHEMATICS

Kevin suggested that one calibration chamber be provided for each installed pump.

PLAN REVIEW MEETING NO. 1
Owenton Water Treatment Plant–Chemical Bulk Storage
Kentucky American Water
Page 5
August 4, 2008, 10 A.M.

Tobias commented that recent changes to "Ten States Standards" require that the bulk feed tank and day tank be provided with separate ventilation. Strand is researching the requirements for ventilation. However, this detail may be worked out in final design.

Kevin requested that Strand provide two chemical lines for each chemical from the proposed chemical feed building to the existing building. Each chemical feed line should have a hard containment pipe around a flexible chemical carrier pipe. A manhole should also be placed in the yard between the proposed chemical feed building and existing building. The manhole is intended to allow the operators to inspect the carrier piping and help with maintenance and replacement of the chemical piping.

Kevin requested that the chemical tanks be provided with a sloped floor that will aid in the draining of the chemical tanks. The current design is based on the American Water Standard T-2 requirement for HDXLPE bulk chemical tanks. Kevin suggested two manufacturers of HDXLPE bulk storage tanks with sloped bottoms; Snyder and Polyprocess. A sloped floor tank may be more costly, but should aid in maintenance at the plant. At this time, Strand is contacting the manufacturer to determine the options and sizes available for these tanks. If there are changes in the size of the tank, the building size may also change.

There are specific American Water requirements for alarms and displaying the bulk chemical tank contents on the outside of the chemical building. These requirements should adequately inform the chemical delivery trucks of the level of chemical in the tank being filled. Such requirements should be incorporated into the design. Jason is going to provide Strand with the requirements.

The T-2 Standard requires an automatic actuator be installed on all bulk tank outlets to allow the operator to stop flow from the bulk tank without having to enter the containment area.

Prepared by Tobias Parker, P.E., and respectfully submitted to all in attendance.

"Parker, Tobias" <Tobias.Parker@strand.com >

09/15/2008 10:30 AM

To <Jason.Hurt@amwater.com>
cc "Keil, Chris" <Chris.Keil@strand.com>
bcc
Subject Owenton WTP - 70% Drawings

Jason,

I've attached 70% drawings to this email.

Please feel free to call with any questions or comments.

Sincerely,

Tobias Parker, PE
Strand Associates
www.strand.com

Owenton WTP Draft 70% Drawings.pdf

OWEN COUNTY WATER TREATMENT PLANT
CHEMICAL FEED SYSTEM IMPROVEMENTS
OWENTON, KY

XXXX 20XX

DRAFT-NOT FOR CONSTRUCTION

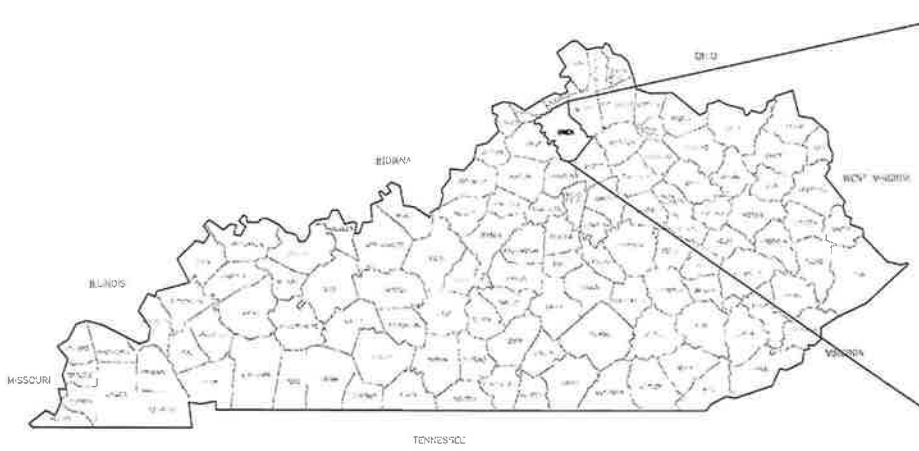

AREA MAP
NO SCALE

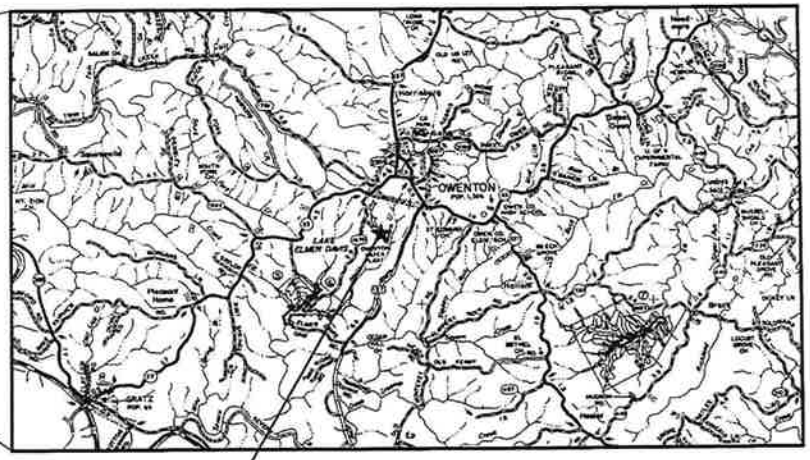

PROJECT LOCATION MAP
NO SCALE

325 West Main Street, Suite 710
Louisville, KY 40202
502 583-7020
502 583-7026 FAX

www.strand.com

OWEN COUNTY WATER TREATMENT FACILITY
220 Water Plant Lane
Owenton, KY 40359

PROJECT: 4300916

Kentucky American Water

STRAND ASSOCIATES, INC. ENGINEERS

SHEET 1
00-G0-01
JOB NO. 5493.107

File: S:\LOU\5400--5499\5493\107\Acad\00-G0.01.dwg Time: Sep 12, 2008 – 4:22pm

KAW_R_PSCDR1#3_072312
Page 131 of 147

DRAWING LIST

SHEET NO.		DRAWING NO.	TITLE
00-GENERAL			
	X	00-G0.01	TITLE SHEET AND LOCATION MAP
	X	00-G0.02	LIST OF DRAWINGS AND DESIGN CRITERIA
	X	00-G0.03	ABBREVIATIONS
	X	00-G0.04	STANDARD SYMBOLS - 1
	X	00-G0.05	STANDARD SYMBOLS - 2
05-SITE			
	X	05-C.01	OVERALL SITE PLAN
	X	05-C.02	OVERALL SITE GRADING PLAN
10-EXISTING BUILDING			
	X	10-ABME.01	EXISTING BUILDING DEMOLITION PLAN
20-CHEMICAL BUILDING			
	X	20-ABM.01	CHEMICAL BUILDING PLAN
	X	20-ABM.02	CHEMICAL BUILDING SECTIONS
	X	20-AB.01	FOUNDATION PLANS
	X	20-AB.02	ROOF FRAMING PLAN
	X	20-AB.03	ELEVATION AND LIFE SAFETY PLANS
	X	20-M.01	FERRIC CHLORIDE CHEMICAL FEED SCHEMATIC
	X	20-M.02	CAUSTIC SODA CHEMICAL FEED SCHEMATIC
	X	20-M.03	SULFURIC ACID CHEMICAL FEED SCHMATIC
	X	20-M.04	CORROSION INHIBITOR AND FLUORIDE CHEMICAL FEED SCHEMATICS ELECTRICAL PLAN

DESIGN CRITERIA

		Units	Design
Plant Capacity			
Date:		year	2007
Minimum Flow:		MGD	0.6
Average Flow:		MGD	0.8
Max Flow (24 hr operation)		MGD	1.0
Gas Scrubber			
Quantity:		No.	1
Type of Media	Chlorisorb Ultra Media		
Minimum media weight		lbs	1,620
Minimum media height		inch	45
Minimum gas residence time:		seconds	3
Chemical(s) Removed:	Chlorine Gas		
Removal capacity:		lbs of chlorine	175
Maximum chlorine from scrubber:		ppb	25
Blower capacity:		cfm	700
Temperature:		F	ambient
Blower hp:		hp	5
Chemical Feed Equipment and Rates			
Ferric Chloride (40%)		lb/gal	11.0
Injection Location (s):	Rapid Mix Tank		
Type of Metering Pump:	Peristaltic		
No of Metering Pump(s):		No.	2
Capacity (ea):		gph	7.8
Caustic Soda (50%)		lb/gal	12.8
Injection Location (s):	Post-Filters		
Type of Metering Pump:	Peristaltic		
No of Metering Pump(s):		No.	1
Capacity (ea):		gph	1.5
Fluoride (23%)		lb/gal	10.3
Injection Location (s):	Post Filters		
Type of Metering Pump:	Peristaltic		
No of Metering Pump(s):		No	1
Capacity (ea):		gph	0.22
Corrosion Inhibitor		lb/gal	11.2
Injection Location (s):	Post-Filters		
Type of Metering Pump:	Peristaltic		
No of Metering Pump(s):		No.	1
Capacity (ea):		gph	0.07
Sulfuric Acid (98%)		lb/gal	15.3
Injection Location (s):	Rapid Mix Tank		
Type of Metering Pump:	Peristaltic		
No of Metering Pump(s):		No	1
Capacity (ea):		gph	0.32

Wet Chemical Dosages at Point of Application

	Min (ppm)	avg (ppm)	Max (ppm)
Ferric Chloride (40%) - based on 2007 Usage Rapid Mix	90	160	280
Caustic Soda (50%) - based on 2007 Usage Post-Filters	4	15	27
Fluoride (23%) - based on 2007 Usage Post-Filters	2	4	6.6
Corrosion Inhibitor Post-Filters	0.5	NA	2
Sulfuric Acid (98%) Rapid Mix	4	NA	14

Chemical Storage Requirements

	Storage Criteria	Required Volume	Type of Container	Storage Capacity
Ferric Chloride (40%)	Full Truck Delivery + 25%	5000 gal solution	XHDPE Tank	1-5150 gal tank (bulk tank) and 1-150 gal (day tank)
Caustic Soda (50%)	31 days @ 27 ppm and 0.8 MGD	876 gal solution	XHDPE Tank	1-1150 gal tank (bulk tank) and 1-55 gal (day tank)
Fluoride (23%)	31 days @ 6.6 ppm and 0.8 MGD	133 gal solution	55 gal drum	3 - 55 gallon drums
Corrosion Inhibitor	31 days @ 1.6 ppm and 0.8 MGD	28 gal solution	55 gal drum	2 - 55 gallon drums
Sulfuric Acid (98%)	31 days @ 14 ppm and 0.8 MGD	189 gal solution	300 gal tote	2 - 300 gallon totes

DRAFT-NOT FOR CONSTRUCTION

File: S:\LOU\5400--5499\5493\107\Acad\00-G0.02.dwg Time: Sep 12, 2008 - 4:22pm

NO.	REVISIONS	DATE

DATE: 9/08
DES BY: TP CK BY: CK
RECORD DRAWING
BY:
DATE:
CONTRACTOR:

LIST OF DRAWINGS & DESIGN CRITERIA
OWEN COUNTY WATER TREATMENT PLANT
CHEMICAL FEED SYSTEM IMPROVEMENTS
KENTUCKY AMERICAN WATER
OWENTON, KENTUCKY

STRAND ASSOCIATES, INC. ENGINEERS

SHEET XXX
00-G0.02
JOB NO. 5493.107

KAW_R_PSCDR1#3_072312
Page 132 of 147

GENERAL EQUIPMENT AND FLUID ABBREVIATIONS

AC	AIR COMPRESSOR
AOV	AIR OPERATED VALVE
B	BLOWER
BFV	BUTTERFLY VALVE
COMP	COMPRESSOR
MBV	MOTORIZED BALL VALVE
OCD	OVERHEAD COILING DOOR
SP	SUMP PUMP
PAC	POWDER ACTIVATED CARBON
LW	LAKE WATER
RW	RIVER WATER
CMP	CORROGATED METAL PIPE
CS	CAUSTIC SODA
FC	FERRIC CHLORIDE
CIN	CORROSION INHIBITOR
SA	SULFURIC ACID
FL	FLOUROSILIC ACID

PLUMBING AND PROCESS ABBREVIATIONS

BF	BLIND FLANGE
BFP	BACKFLOW PREVENTER
CA	COMPRESSED AIR
CB	CATCH BASIN
CD	CONDENSATE AIR
CI	CAST IRON
CO	CLEAN OUT
COND	CONDENSATE
CW	COLD WATER
D	DRAIN
DCBP	DOUBLE CHECK BACKFLOW PREVENTER
DI	DUCTILE IRON
HB	HOSE BIB
HDPE	HIGH DENSITY POLYETHYLENE
HSM	HIGH SERVICE MAIN
HWL	HIGH WATER LEVEL
HW	HOT WATER
IE	INVERT ELEVATION
MH	MANHOLE
P	PUMP
PRV	PRESSURE REDUCING VALVE
PVC	POLYVINYL CHLORIDE
QC	QUICK CONNECT
RCP	REINFORCED CONCRETE PIPE
RD	ROOF DRAIN
S	SINK
SD	SHOWER DRAIN
SEJ	SEWAGE EJECTOR
SHR	SHOWER

ELECTRICAL ABBREVIATIONS

A	AMPERE
AF	AMPERE FRAME
AFF	ABOVE FINISHED FLOOR
AFG	ABOVE FINISHED GRADE
AHJ	AUTHORITY HAVING JURISDICTION
AHU	AIR HANDLING UNIT
AIC	AMPERE INTERRUPTING CAPACITY
AL	ALUMINUM
AT	AMPERE TRIP
ATS	AUTOMATIC TRANSFER SWITCH
AV	AUDIO VISUAL
AWG	AMERICAN WIRE GAUGE
BLDG	BUILDING
C	CONDUIT
CAT	CATALOG
CATV	CABLE TELEVISION
CB	CIRCUIT BREAKER
CCTV	CLOSED CIRCUIT TELEVISION
CKT	CIRCUIT
CL	CENTERLINE
CLG	CEILING
COL	COLUMN
CT	CURRENT TRANSFORMER
CTE	CONNECT TO EXISTING
CU	COPPER
CUH	CABINET UNIT HEATER
D	DEDICATED
DC	DIRECT CURRENT
DISC	DISCONNECT
DWG	DRAWING
E	EMERGENCY
EC	ELECTRICAL CONTRACTOR
EDH	ELECTRIC DUCT HEATER
EF	EXHAUST FAN
EMT	ELECTRICAL METALLIC TUBING
EOL	END OF LINE DEVICE
EWC	ELECTRIC WATER COOLER
EX	EXISTING
FACP	FIRE ALARM CONTROL PANEL
FCU	FAN COIL UNIT
FLA	FULL LOAD AMPERES
FPCP	FIRE PUMP CONTROL PANEL
FR	FIRE RETARDANT
FT	FEET
FDA	FOOD AND DRUG ADMINISTRATION
FVNR	FULL VOLTAGE NON-REVERSING
G	GROUND
GC	GENERAL CONTRACTOR
GFP	GROUND FAULT PROTECTION (EQUIPMENT)
GFCI	GROUND FAULT CKT INTERRUPTER
HACR	HEATING AND AIR CONDITIONING RATED
HP	HORSEPOWER
HV	HIGH VOLTAGE
HVAC	HEATING, VENTILATING, & AIR CONDITIONING
HZ	HERTZ
IG	ISOLATED GROUND
IMC	INTERMEDIATE METAL CONDUIT
JB	JUNCTION BOX
KCMIL	ONE THOUSAND CIRCULAR MILS
KO	KNOCKOUT
KVA	KILOVOLT AMPERES
KVAR	KILOVOLT AMPERES REACTIVE
KW	KILOWATT
LTG	LIGHTING
LV	LOW VOLTAGE
MATV	MASTER ANTENNA TELEVISION
MC	METAL CLAD
MCB	MAIN CIRCUIT BREAKER
MCCB	MOLDED CASE CIRCUIT BREAKER
MCM	THOUSAND CIRCULAR MILS
MCP	MOTOR CIRCUIT PROTECTOR
MDP	MAIN DISTRIBUTION PANELBOARD
MISC	MISCELLANEOUS
MLO	MAIN LUGS ONLY
MO	MOTOR OPERATED
MSB	MAIN SWITCHBOARD
MTD	MOUNTED
MTG	MOUNTING
MTS	MANUAL TRANSFER SWITCH
MV	MEDIUM VOLTAGE
MW	MICROWAVE OR MEGAWATT
NA	NOT APPLICABLE
NC	NORMALLY CLOSED
NAC	NOTIFICATION APPLIANCE CIRCUIT PANEL
NEC	NATIONAL ELECTRIC CODE
NIC	NOT IN CONTRACT
NL	NIGHT LIGHT
NM	NONMETALLIC
NO	NORMALLY OPEN
NSF	NATIONAL SANITARY FOUNDATION
NTS	NOT TO SCALE

ELECTRICAL ABBREVIATIONS CONTINUED

OCB	OIL CIRCUIT BREAKER
P	POLE
PB	PULL BOX
PC	PULL CORD
PH	PH SENSOR
Ø	PHASE
PNL	PANELBOARD
PRI	PRIMARY
PS	PRESSURE SWITCH
PT	POTENTIAL TRANSFORMER
PTZ	PANTEL ZOOM CAMERA
PVC	POLYVINYL CHLORIDE
PWR	POWER
RSC	RIGID GALVANIZED STEEL CONDUIT
RVNR	REDUCED VOLTAGE NON-REVERSING
SC	SHORT CIRCUIT
SE	SERVICE ENTRANCE
SEC	SECONDARY
SS	STAINLESS STEEL
SV	SOLENOID VALVE
SW	SWITCH
TEL	TELEPHONE
TYP	TYPICAL
UG	UNDERGROUND
UH	UNIT HEATER
UPS	UNINTERRUPTIBLE POWER SUPPLY
UTP	UNSHIELDED TWISTED PAIR
V	VOLTS
VFD	VARIABLE FREQUENCY DRIVE
W	WIRE OR WATT
WD	HIGH PRESSURE WASH DOWN
WL	WET LOCATION
WP	WEATHERPROOF
XFMR	TRANSFORMER
XP	EXPLOSION PROOF
Y	WYE
XP	EXPLOSION PROOF
Y	WYE
ZS	ZERO SPEED

GENERAL/HVAC ABBREVIATIONS

ACH	AIR CHANGES PER HOUR
AFF	ABOVE FINISHED FLOOR
ALT	ALTERNATE
AP	ACCESS PANEL
BTU	BRITISH THERMAL UNIT
BTUH	BRITISH THERMAL UNIT PER HOUR
CFM	CUBIC FEET PER MINUTE
CLG	CEILING
COND	CONDENSATE
DAT	DISCHARGE AIR TEMPERATURE
DB	DRY BULB TEMPERATURE
DDC	DIRECT DIGITAL CONTROL
DG	DOOR GRILLE
DX	DIRECT EXPANSION
EA	EXHAUST AIR
EAT	ENTERING AIR TEMPERATURE
EL	ELEVATION
ESP	EXTERNAL STATIC PRESSURE
EWT	ENTERING WATER TEMPERATURE
FC	FAIL CLOSED
FLA	FULL LOAD AMPS
FO	FAIL OPEN
FPI	FINS PER INCH
FPM	FEET PER MINUTE
FT	FEET
GA	GAUGE
GPM	GALLONS PER MINUTE
LAT	LEAVING AIR TEMPERATURE
LWT	LEAVING WATER TEMPERATURE
MBH	THOUSANDS OF BTU PER HOUR
MC	MECHANICAL CONTRACTOR
NA	NOT APPLICABLE
NC	NORMALLY CLOSED
NO	NORMALLY OPEN
NPT	NATIONAL PIPE THREAD
NTS	NOT TO SCALE
OA	OUTSIDE AIR
OC	ON CENTER
OV	OUTLET VELOCITY
PD	PRESSURE DROP
PSI	POUNDS PER SQUARE INCH
PSIG	POUNDS PER SQUARE INCH GAUGE
RA	RETURN AIR
RPM	REVOLUTIONS PER MINUTE
SA	SUPPLY AIR
SP	STATIC PRESSURE

HVAC EQUIPMENT ABBREVIATIONS

ACCU	AIR COOLED CONDENSING UNIT
AFR	ARCHITECTURAL FINE TUBE RADIATION
AHU	AIR HANDLING UNIT
AS	AIR SEPARATOR
BLR	BOILER
BB	BASEBOARD
C	CONVECTOR
CD	CEILING DIFFUSER
CHILL	CHILLER
CT	COOLING TOWER
CUH	CABINET UNIT HEATER
CWP	CHILLED WATER PUMP
DC	DRY COOLER
DH	DEHUMIDIFIER
DL	DRUM LOUVER
EBB	ELECTRIC BASEBOARD
EDH	ELECTRIC DUCT HEATER
EF	EXHAUST FAN
EG	EXHAUST GRILLE
EJ	EXPANSION JOINT
EL	EXPANSION LOOP
ER	EXHAUST REGISTER
ERC	ELECTRIC REHEAT COIL
ERU	ENERGY RECOVERY UNIT
EUH	ELECTRIC UNIT HEATER
EWH	ELECTRIC WALL HEATER
FCU	FAN COIL UNIT
FD	FIRE DAMPER
FR	FINNED TUBE RADIATION
FUR	FURNACE
GRV	GRAVITY ROOF VENTILATOR
GUH	GAS UNIT HETATER
HC	HEATING COIL
HP	HEAT PUMP
HRP	HEAT RECOVERY PUMP
HU	HUMIDIFIER
HWH	HOT WATER UNIT HEATER
HWP	HOT WATER PUMP
HTX	HEAT EXCHANGER
L	LOUVER
MAU	MAKE-UP AIR UNIT
P	PUMP
PWP	PROCESS WATER PUMP
RF	RETURN FAN
RG	RETURN GRILLE
RR	REGISTER
RTU	ROOFTOP UNIT
SD	SUCTION DIFFUSER
SF	SUPPLY FAN
SG	SUPPLY GRILLE
SR	SUPPLY REGISTER
ST	STEAM TRAP
SUH	STEAM UNIT HEATER
TCP	TEMPERATURE CONTROL PANEL
TG	TRANSFER GRILLE
UH	UNIT HEATER
UV	UNIT VENTILATOR
VAV	VARIABLE AIR VOLUME BOX
VD	VOLUME DAMPER
VFD	VARIABLE FREQUENCY DRIVE
XT	EXPANSION TANK

DRAFT-NOT FOR CONSTRUCTION

NO. | REVISIONS | DATE:

DATE: 9/08 DES: BY:TJP CHK: BY:CJK
RECORD DRAWING
BY: DATE: CONTRACTOR:

ABBREVIATIONS

OWEN COUNTY WATER TREATMENT PLANT
CHEMICAL FEED SYSTEM IMPROVEMENTS
KENTUCKY AMERICAN WATER
OWENTON, KENTUCKY

STRAND ASSOCIATES, INC.®
ENGINEERS

SHEET XX
00-G0.03
JOB NO: 5493.107

File: S:\LOU\5400--5499\5493\107\Acad\00-G0.03.dwg Time: Sep 12, 2008 - 4:23pm

DRAFTING SYMBOLS

- DETAIL NOTATION — DETAIL LETTER / SHEET WHERE SHOWN
- SECTION NOTATION — SECTION NUMBER / SHEET WHERE SECTION IS TAKEN
- ELEVATION NOTATION — ELEVATION LETTER / SHEET WHERE SHOWN
- EQUIPMENT IDENTIFICATION — TYPE OF EQUIPMENT / EQUIPMENT GROUP
- NAME
- ROOM IDENTIFICATION
- DOOR IDENTIFICATION
- WINDOW IDENTIFICATION
- KEY/SPECIFIC NOTE CALL-OUT
- PARTITION TYPE REFERENCE
- CENTER LINE OF BEAM-COLUMN FRAME SYSTEM
- POINTS OF VIEW BEING CONSIDERED / MATCH LINE
- REVISION
- +EL 1000.00 FINISH ELEVATION
- EL 1000.00 SPOT ELEVATION
- EXISTING OBJECTS ARE SCREENED
- EXISTING OBJECTS TO BE ABANDONED
- EXISTING OBJECTS TO BE DEMOLISHED
- HIDDEN OBJECT
- FUTURE OBJECT
- OBJECT SUPPLIED BY OWNER

ARCHITECTURAL SYMBOLS

- EARTH
- SAND, PLASTER, STUCCO
- CONCRETE
- BRICK
- CONCRETE BLOCK
- ACOUSTIC BLOCK
- ASHLAR STONE VENEER
- METAL
- METAL LATH
- WOOD-FINISH
- WOOD-FRAMING
- PLYWOOD
- ACOUSTICAL TILE
- GYPSUM BOARD
- BATT INSULATION
- RIGID INSULATION
- CHECKERED PLATE
- HANDRAIL

TOPOGRAPHICAL SYMBOLS

- AREA OF THE SITE
- CORPORATE LIMITS
- PROPERTY LINE AND/OR RIGHT OF WAY
- RIGHT OF WAY MARKER
- CONSTRUCTION EASEMENT ON SEWER AND WATER PLANS
- PERMANENT EASEMENT ON SEWER AND WATER PLANS
- SECTION LINE
- CENTER LINE
- SOIL BORING

- BENCH MARK
- PROPERTY STAKE
- PRIVATE WELL
- EXISTING UTILITY POLE
- NEW UTILITY POLE
- BURIED TELEPHONE CABLE PEDESTAL
- SIGN
- LIGHT POLE
- DECIDUOUS TREE
- CONIFEROUS TREE
- DECIDUOUS SHRUBS
- CONIFEROUS SHRUBS
- INTERMITTENT STREAM
- STREAM OR RIVER
- WETLAND AREA
- RAILROAD — LARGE SCALE
- BRIDGE
- EXISTING CULVERT
- SILT FENCE
- FENCE
- GUARD RAIL
- CURB, GUTTER AND INLET
- REJECT CURB
- CONTOUR LINES
- EXISTING DEPRESSION
- TOP OF CUT OR BERM

UNDERGROUND UTILITY SYMBOLS

- NEW WATER MAIN AND VALVE MANHOLE
- WATER MAIN AND VALVE IN ROAD BOX
- EXISTING WATER MAIN AND FIRE HYDRANT
- NEW WATER MAIN AND FIRE HYDRANT WITH AUXILIARY VALVE
- EXISTING SANITARY SEWER AND MANHOLE
- NEW SANITARY SEWER AND MANHOLE
- EXISTING STORM SEWER AND MANHOLE (I-INLET)
- NEW STORM SEWER AND MANHOLE (I-INLET)
- FORCE MAIN
- VALVE MANHOLE ON FORCE MAIN
- WYE BRANCH
- RISER
- MODIFIED RISER
- TELEPHONE OR TV CABLE AND MANHOLE
- GAS MAIN
- UNDERGROUND ELECTRIC CABLE
- EXISTING WATER MAIN, SEWER MANHOLE, AND FORCE MAIN IN PROFILE
- NEW WATER MAIN, SEWER, MANHOLE AND FORCE MAIN IN PROFILE

- CULVERT IN PROFILE
- NEW GRADE LINE
- SLOPE INTERCEPT
- ORIGINAL GROUND IN PROFILE
- ROCK IN PROFILE
- SURVEY OR REFERENCE LINE
- POINT OF INTERSECTION
- POINT ON REFERENCE LINE
- BUILDING IN PROFILE
- DIRECTION OF TRAFFIC
- NOTATION FOR COMBUSTIBLE FLUIDS

ELECTRICAL SYMBOLS

LIGHTING

- FIXTURE SYMBOL (TYPICAL) A—INDICATES FIXTURE TYPE 2—INDICATES CIRCUIT NUMBER b—INDICATES SWITCHING SOLID CIRCLE INDICATES ALWAYS ON
- INCANDESCENT, HID, SURFACE OR PENDANT
- INCANDESCENT, HID, WALL
- 1X4 FLUORESCENT, SURFACE OR PENDANT
- 1X8 FLUORESCENT, SURFACE OR PENDANT
- FLUORESCENT, WALL
- 1X4 FLUORESCENT, RECESSED
- 2X2 FLUORESCENT, RECESSED
- 2X4 FLUORESCENT, RECESSED
- CAN, FLUORESCENT OR HID
- EXIT, SURFACE, PENDANT OR RECESSED
- EXIT, WALL
- EMERGENCY LIGHTING

SWITCHES

- $ SINGLE POLE
- $2 TWO POLE
- $3 THREE WAY
- $4 FOUR WAY
- $K KEYED
- $P SWITCH WITH PILOT LIGHT
- $D DIMMER
- $M MANUAL SWITCH (HORSEPOWER RATED)
- LOCKOUT STOP SWITCH
- DOOR LIMIT SWITCH
- CONTROL SWITCH DEVICE TYPE (SEE MCC SCHEDULE)

EQUIPMENT AND WIRING

- GROUND ROD 10'-5/8" DIA. COPPER CLAD
- TRANSFORMER
- DISCONNECT, F=FUSED, B=CIRCUIT BREAKER
- MOTOR STARTER MAGNETIC
- CIRCUIT BREAKER COMBINATION STARTER
- MANUAL STARTER WITH THERMAL OVERLOAD PROTECTION
- JUNCTION BOX
- LINE VOLTAGE THERMOSTAT
- MOTOR CIRCUIT, NUMBER FROM MCC SCHEDULE

POWER SYMBOLS

- UNDERGROUND ELECTRIC
- OVERHEAD ELECTRIC
- CIRCUIT NUMBER (TYPICAL) OTHERWISE SHOWN PANEL DESIGNATION (TYP.)
- DUPLEX, 125 VOLT, WP INDICATES WEATHERPROOF
- DUPLEX, 125 VOLT, ABOVE FURNITURE
- DOUBLE DUPLEX, 125 VOLT, ABOVE FURNITURE
- DOUBLE DUPLEX, 125 VOLT
- SINGLE CONVENIENCE, 125 VOLT FOR ELECTRIC WATER COOLER
- EXPLOSION-PROOF, ABOVE FURNITURE
- EXPLOSION-PROOF
- FIXED EQUIPMENT CONNECTION
- POWER OUTLET, VOLTAGE & AMPERAGE AS INDICATED
- COMPUTER NETWORK OUTLET
- AUTOMATIC TRANSFER SWITCH (ONE-LINE DIAGRAM)
- CIRCUIT BREAKER (ONE-LINE DIAGRAM)
- METER (ONE-LINE DIAGRAM)
- PANELBOARD

INSTRUMENTATION EQUIPMENT

- SOLENOID VALVE
- DISSOLVED OXYGEN DEVICE
- PH SENSOR
- DENSITY METER
- AIR FLOW METER
- FLOW INDICATING TRANSMITTER
- FLOAT SWITCH
- PRESSURE SWITCH
- PRESSURE TRANSDUCER
- DIFFERENTIAL PRESSURE TRANSDUCER
- SUBMERSIBLE PRESSURE TRANSDUCER
- MOTION SENSOR
- ULTRASONIC FLOW METER
- MAGNETIC FLOW METER
- ULTRASONIC LEVEL TRANDUCER
- CONTROL STATION
- OCCUPANCY SENSOR — SEE SCHEDULE FOR SENSOR TYPE

TECHNOLOGY SYMBOLS

- DATA LOBE
- PHONE
- VOICE AND DATA LOBE
- DATA RACK
- CO-AXIAL CABLE
- VERTICAL DECORATIVE WIREWAY
- XXX

SOUND SYSTEM

- SPEAKER — CEILING
- SPEAKER (H-HORN, S-SPEAKER)-SURFACE
- DOUBLE SPEAKER (H-HORN, S-SPEAKER)-SURFACE
- INTERCOM TELEPHONE — WALL
- INTERCOM TELEPHONE — DESK
- TELEPHONE
- TELEPHONE FLOOR BOX

FIRE ALARM SYSTEM

- FIRE ALARM STROBE — ADA RATED (CEILING MOUNT)
- FIRE ALARM STROBE — ADA RATED (WALL MOUNT) — STROBE CANDELA RATING
- HORN/STROBE (WALL MOUNT) 80" AFF — STROBE CANDELA RATING
- HORN 80" AFF
- CEILING MOUNTED SMOKE DETECTOR
- FIRE ALARM PULL STATION
- FACP FIRE ALARM CONTROL PANEL
- FAAP FIRE ALARM ANNUNCIATOR PANEL
- FS FLOW SWITCH
- TS TAMPER SWITCH
- RTS REMOTE TEST SWITCH — SWITCH INDICATION
- CEILING MOUNTED HORN/STROBE — STROBE CANDELA RATING
- CEILING MOUNTED HEAT DETECTOR
- DUCT MOUNTED SMOKE DETECTOR — SWITCH INDICATION

SECURITY SYSTEM

- MOTION SENSOR CEILING MOUNTED
- MOTION SENSOR WALL MOUNTED
- DOOR POSITION SWITCH
- MAGNETIC LOCKS
- CARD READER
- ELECTRIC STRIKE

DRAFT-NOT FOR CONSTRUCTION

NO.	REVISIONS	DATE

DATE: 9/08 DES BY:TJP CHK BY: CJK
RECORD DRAWING
BY:
DATE:
CONTRACTOR:

STANDARD SYMBOLS - 1

OWEN COUNTY WATER TREATMENT PLANT
CHEMICAL FEED SYSTEM IMPROVEMENTS
KENTUCKY AMERICAN WATER
OWENTON, KENTUCKY

STRAND ASSOCIATES, INC.® ENGINEERS

SHEET XX
00-G0.04
JOB NO. 5493.107

File: S:\LOU\5400--5499\5493\107\Acad\00-G0.04.dwg Time: Sep 12, 2008 - 4:23pm

KAW_R_PSCDR1#3_072312

PIPING DESIGNATIONS

- A — AIR
- CA — COMPRESSED AIR
- CW — COLD WATER
- CWR — COLD WATER RETURN
- CWS — COLD WATER SUPPLY
- DEW — DISINFECTED EFFLUENT WATER
- G — NATURAL GAS PIPING
- HW — HOT WATER
- HWR — HEATING HOT WATER RETURN
- HWS — HEATING HOT WATER SUPPLY
- LPC — LOW PRESSURE CONDENSATE
- LPS — LOW PRESSURE STEAM
- NPW — NONPOTABLE WATER
- RL — REFRIGERANT LIQUID
- RS — REFRIGERANT SUCTION
- SPD — SUMP PUMP DISCHARGE
- SW — SOFT WATER
- VENT PIPE
- WASTE BELOW GRADE
- WASTE ABOVE GRADE
- STORM BELOW GRADE
- STORM ABOVE GRADE

PIPING SYMBOLS

- FLANGE JOINT
- GROOVED JOINT
- MECHANICAL JOINT
- PUSH – ON JOINT
- RUBBER EXPANSION JOINT
- SOLVENT WELD OR THREADED JOINT
- PIPE COUPLING WITH TENSION TIES
- SMALL DIAMETER PIPE
- WALL PIPE
- WALL SLEEVE
- FABRICATED WALL SLEEVE
- SHUT OFF VALVE
- FLOOR STAND IN PLAN
- STOP PLATE – EMBEDDED
- SLIDE GATE – EMBEDDED
- SLIDE GATE – SURFACE MOUNTED
- SLUICE GATE
- P/VR — PRESSURE/VACUUM RELIEF
- LIQUID RING COMPRESSOR
- OP — ORIFICE PLATE
- M — MANOMETER
- FD — FLOOR DRAIN
- RD — ROOF DRAIN
- HD — HUB DRAIN
- HOSE BIB
- WATER HAMER ARRESTER
- 6 — WATER SUPPLY/DRAINAGE FIXTURE UNITS
- THERMOMETER
- TRAP PRIMER

PIPING SYMBOLS

- ELBOW DOWN
- ELBOW UP
- M — METER
- STRAINER
- TEE DOWN
- TEE UP
- UNION
- GAS PRESSURE REGULATOR
- PI — PRESSURE INDICATOR
- PT — PRESSURE TRANSMITTER
- TC — TEMPERATURE ELEMENT
- TI — TEMPERATURE INDICATOR
- TT — TEMPERATURE TRANSMITTER
- MANUAL AIR VENT
- CONCENTRIC REDUCER
- ECCENTRIC REDUCER
- FLEXIBLE CONNECTOR

VALVE SYMBOLS

- AIR PRESSURE RELIEF VALVE
- BALANCING VALVE
- BALL VALVE
- BALL CHECK VALVE
- BUTTERFLY VALVE
- CHECK VALVE
- GAS SHUTOFF PLUG VALVE
- GATE VALVE
- GLOBE VALVE
- LOW PRESSURE CHECK VALVE
- PRESSURE REDUCING VALVE
- PVR — PRESSURE RELIEF VALVE
- TELESCOPIC VALVE
- 3–WAY VALVE
- TRIPLE DUTY VALVE

EQUIPMENT SYMBOLS

- ACU — ACCUMULATOR
- AIR FLOW DIRECTION
- BASE MOUNTED PUMP
- BLOWER
- CEILING DIFFUSER WITH FLEXIBLE DUCT
- CENTRIFUGAL PUMP
- CONNECT TO EXISTING
- DT — DRIP TRAP
- DUCT BOOST COIL
- Type / Group — EQUIPMENT TAG
- FA — FLAME ARRESTER
- FC — FLAME CELL
- FT — FLAME TRAP ASSEMBLY
- G — GRINDER
- INLINE PUMP
- POSITIVE DISPLACEMENT PUMP
- ROOF EXHAUST FAN
- UNIT HEATER
- VARIABLE AIR VOLUME (VAV) BOX WITH ELECTRIC REHEAT COIL
- VARIABLE AIR VOLUME (VAV) BOX WITH HEATING HOT WATER REHEAT COIL

DUCTWORK SYMBOLS

- SUPPLY DUCT (UP OR SECTION)
- SUPPLY OR OUTSIDE AIR DUCT (DOWN/OR AWAY)
- EXHAUST DUCT (UP OR SECTION)
- EXHAUST OR RETURN DUCT (DOWN/OR AWAY)
- ROUND DUCTWORK UP
- ROUND DUCTWORK DOWN
- FLEXIBLE CANVAS CONNECTION
- TURNING VANES

DAMPER SYMBOLS

- M — AUTOMATIC DAMPER
- BDD — BACKDRAFT DAMPER
- MANUAL VOLUME DAMPER
- FD — 1–1/2 HR. FIRE DAMPER

FIELD MOUNTED CONTROLS

- T — THERMOSTAT
- H — ROOM HUMIDISTAT
- P — PRESSURE SENSOR
- S — ROOM SENSOR
- DUCT SMOKE DETECTOR
- PRESSURE GAUGE

ACTUATORS

- M — MOTOR (ELECTRIC)
- P — PNEUMATIC
- S — SOLENOID

DRAFT-NOT FOR CONSTRUCTION

NO.	REVISIONS	DATE:

DATE: 9/08 DES. BY: TJP CHK. BY: CJK
RECORD DRAWING
BY: DATE: CONTRACTOR:

STANDARD SYMBOLS - 2

OWEN COUNTY WATER TREATMENT PLANT
CHEMICAL FEED SYSTEM IMPROVEMENTS
KENTUCKY AMERICAN WATER
OWENTON, KENTUCKY

STRAND ASSOCIATES, INC. ENGINEERS

SHEET NO. XX
00–G0.05
JOB NO. 5483.107

File: S:\LOU\5400--5499\5493\107\Acad\00-G0.05.dwg Time: Sep 12, 2008 – 4:24pm

KAW_R_PSCDR1#3_072312

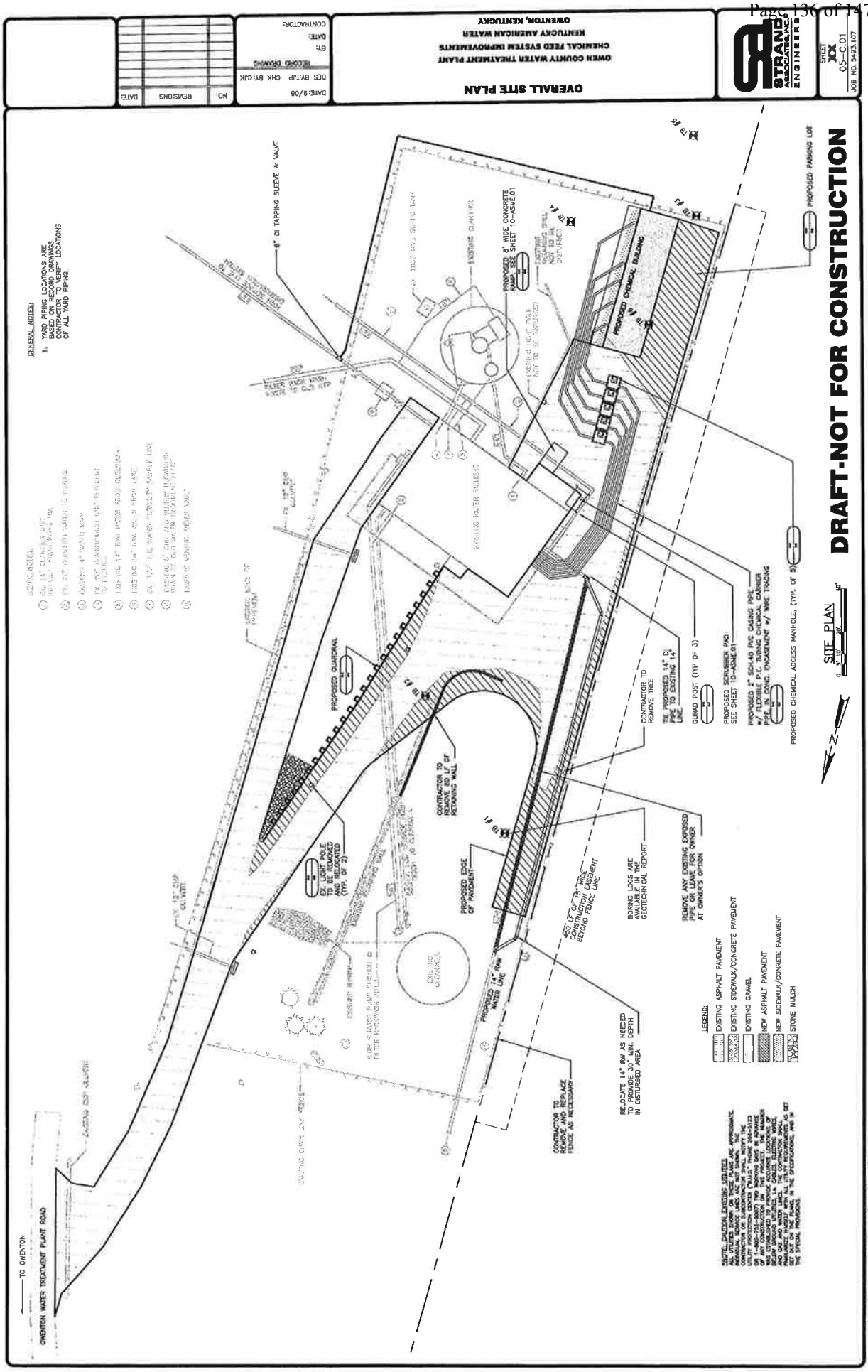
OVERALL SITE PLAN
OWEN COUNTY WATER TREATMENT PLANT
CHEMICAL FEED SYSTEM IMPROVEMENTS
KENTUCKY AMERICAN WATER
OWENTON, KENTUCKY
STRAND ASSOCIATES, INC. ENGINEERS
SHEET XX
05-C.01
JOB NO. 5493.107
DES BY: JHP CHK BY: CJK
DATE: 9/08
RECORD DRAWING
BY:
DATE:
CONTRACTOR
NO REVISIONS DATE
GENERAL NOTES:
1. YARD PIPING LOCATIONS ARE BASED ON RECORD DRAWINGS. CONTRACTOR TO VERIFY LOCATIONS OF ALL YARD PIPING.
TO OWENTON
OWENTON WATER TREATMENT PLANT ROAD
EXISTING CHAIN LINK FENCE
EXISTING GUARD SHACK
EXISTING ASPHALT PAVEMENT
EXISTING CLEARWELL
EXISTING FILTER BUILDING
EXISTING FILTER BACKWASH WASTE TANK
EXISTING ALUM STORAGE TANK
EXISTING CHEMICAL BUILDING
EXISTING LIME SILO
EXISTING CHEMICAL BUILDING
EXISTING ELECTRICAL BUILDING
EXISTING GENERATOR
EXISTING ELECTRICAL BUILDING
EXISTING CLEARWELL
EXISTING 24" RAW WATER INFLUENT LINE
EXISTING 16" RAW WATER INFLUENT LINE
EXISTING 12" RAW WATER INFLUENT LINE
EXISTING 12" RAW WATER INFLUENT LINE
EXISTING 12

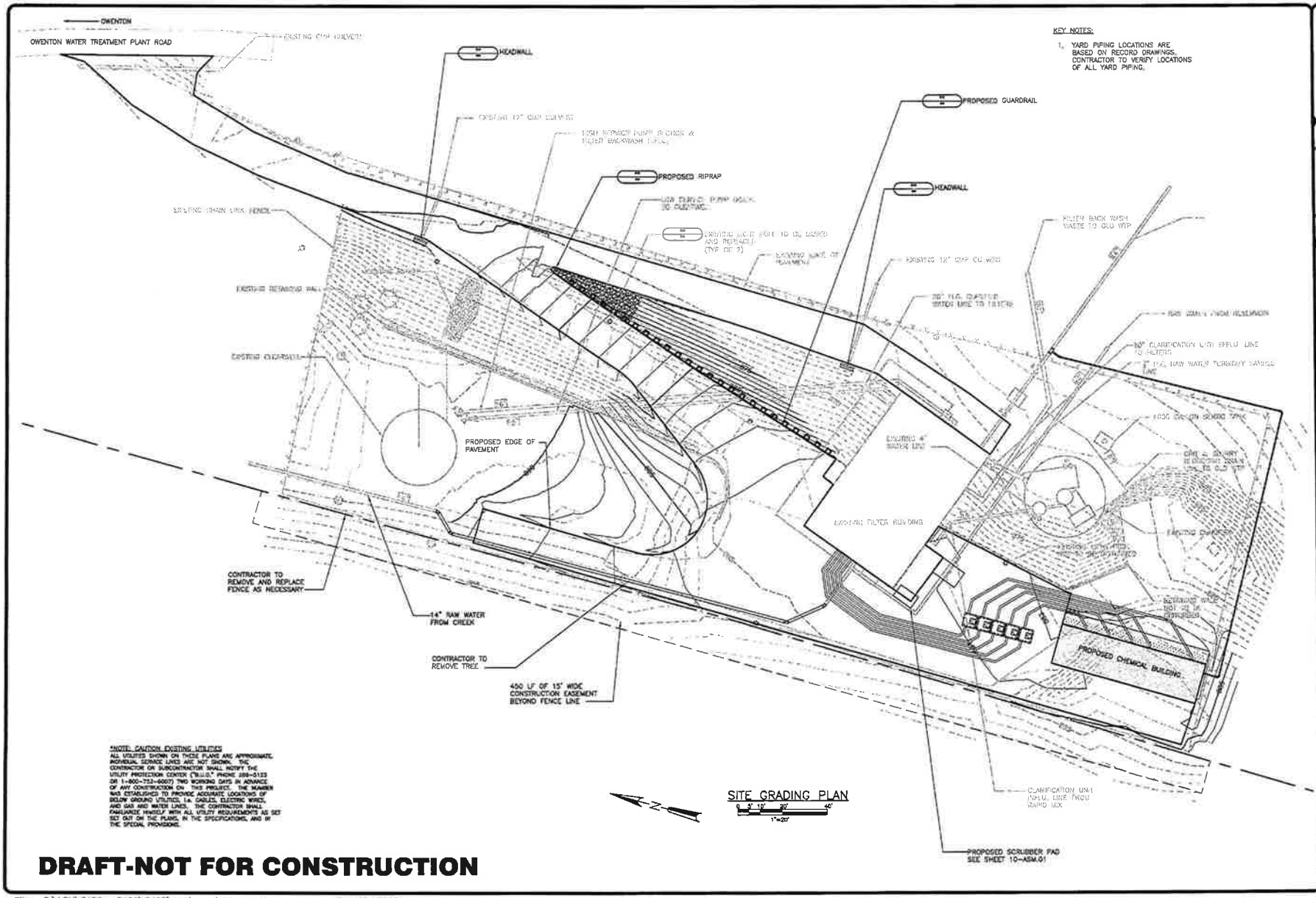

NO. | REVISIONS | DATE:

DATE: 9/08 DES BY: TJP CHK BY: CJK
RECORD DRAWING
BY: DATE: CONTRACTOR:

GRADING PLAN

OWEN COUNTY WATER TREATMENT PLANT
CHEMICAL FEED SYSTEM IMPROVEMENTS
KENTUCKY AMERICAN WATER
OWENTON, KENTUCKY

STRAND ASSOCIATES, INC.® ENGINEERS

SHEET XX 05-C.02
JOB NO. 5493.107

File: S:\LOU\5400--5499\5493\107\Acad\05-C.02.dwg Time: Sep 12, 2008 - 4:26pm

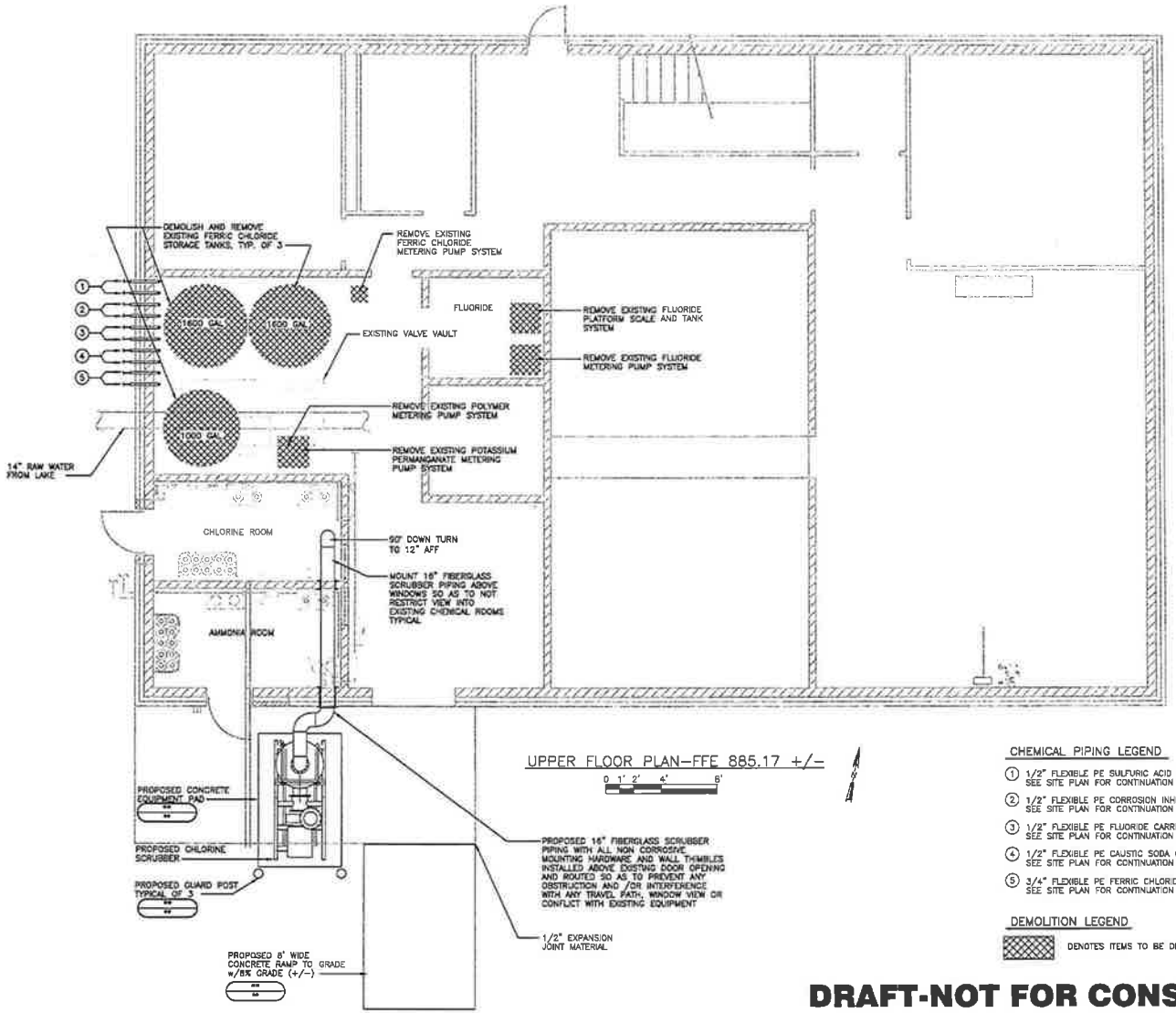

UPPER FLOOR PLAN–FFE 885.17 +/–

0 1' 2' 4' 6'

CHEMICAL PIPING LEGEND

1. 1/2" FLEXIBLE PE SULFURIC ACID CARRIER PIPE IN 2" CPVC CASING PIPE SEE SITE PLAN FOR CONTINUATION
2. 1/2" FLEXIBLE PE CORROSION INHIBITOR CARRIER PIPE IN 2" CPVC CASING PIPE SEE SITE PLAN FOR CONTINUATION
3. 1/2" FLEXIBLE PE FLUORIDE CARRIER PIPE IN 2" CPVC CASING PIPE SEE SITE PLAN FOR CONTINUATION
4. 1/2" FLEXIBLE PE CAUSTIC SODA CARRIER PIPE IN 2" CPVC CASING PIPE SEE SITE PLAN FOR CONTINUATION
5. 3/4" FLEXIBLE PE FERRIC CHLORIDE CARRIER PIPE IN 2" CPVC CASING PIPE SEE SITE PLAN FOR CONTINUATION

DEMOLITION LEGEND

DENOTES ITEMS TO BE DEMOLISHED AND/OR REMOVED

DRAFT-NOT FOR CONSTRUCTION

NO.	REVISIONS	DATE:

DATE: 9/08 DES BY: TJP CHK BY: CJK
RECORD DRAWING
BY:
DATE:
CONTRACTOR:

EXISTING BUILDING DEMOLITION PLAN

OWEN COUNTY WATER TREATMENT PLANT
CHEMICAL FEED SYSTEM IMPROVEMENTS
KENTUCKY AMERICAN WATER
OWENTON, KENTUCKY

STRAND ASSOCIATES, INC.® ENGINEERS

SHEET XX
10-ASME.01
JOB NO. 5493.107

File: S:\LOU\5400--5499\5493\107\Acad\10-ASME.01.dwg Time: Sep 12, 2008 – 4:42pm

KEY NOTES

1. DEPRESS FLOOR BENEATH SCALES.
2. 8" DEEP CHEMICAL SUMP BENEATH GRATING
3. CAUSTIC SODA TRANSFER PUMP-CSTP-20-01 & CSTP-20-02
4. FERRIC CHLORIDE TRANSFER PUMP-FCTP-20-01 & FCTP-20-02
5. FERRIC CHLORIDE DAY TANK (FCDT-20-01) AND LEVEL TRANDUCER (FCULT-20-01)
6. CAUSTIC SODA DAY TANK (CSDT-20-01) AND LEVEL TRANSDUCER (CSULT-20-01)
7. CAUSTIC SODA FEED PUMP CSFP-20-01

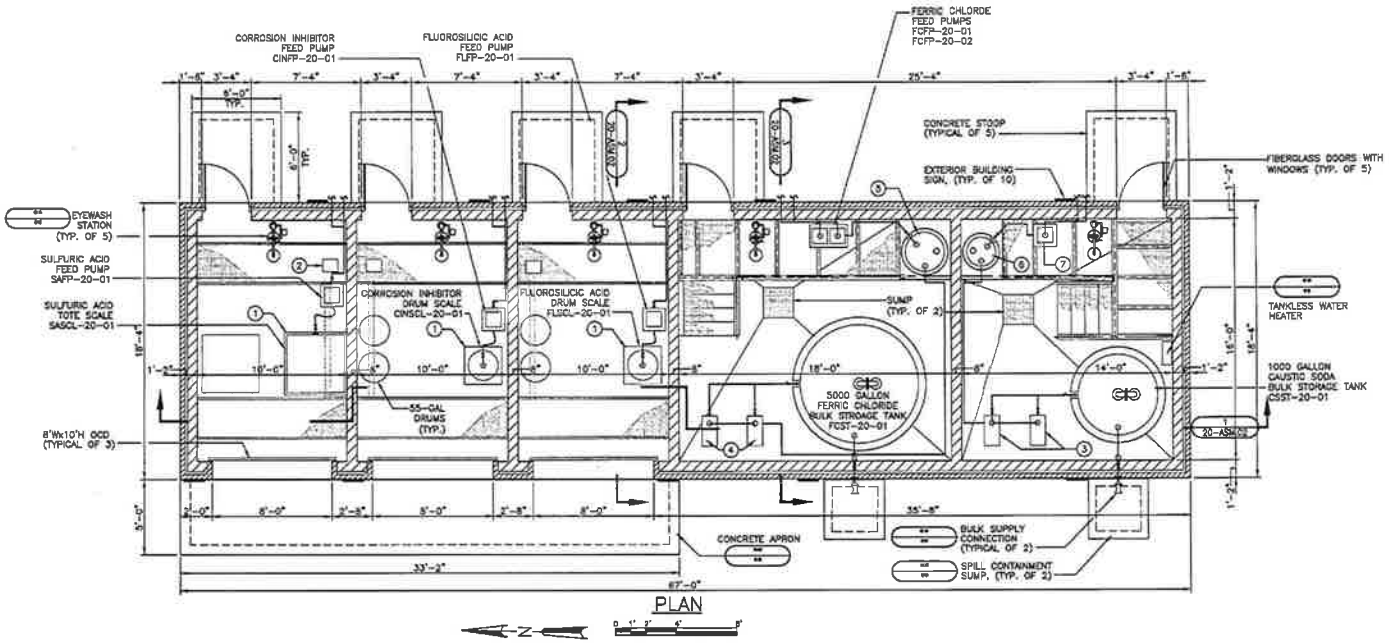

PLAN

DRAFT-NOT FOR CONSTRUCTION

NO.	REVISIONS	DATE

DATE: 8/08 DES. BY: TJP CHK. BY: CJK
RELEASED FOR BIDDING
BY:
DATE:
CONTRACTOR:

CHEMICAL BUILDING PLAN AND SECTION
OWEN COUNTY WATER TREATMENT PLANT
CHEMICAL FEED SYSTEM IMPROVEMENTS
KENTUCKY AMERICAN WATER
OWENTON, KENTUCKY

STRAND ASSOCIATES, INC.® ENGINEERS

SHEET XXX
20-ASM.01
JOB NO. 5493.107

File: S:\LOU\5400--5499\5493\107\Acad\20-ASM.01.dwg Time: Sep 12, 2008 - 4:28pm

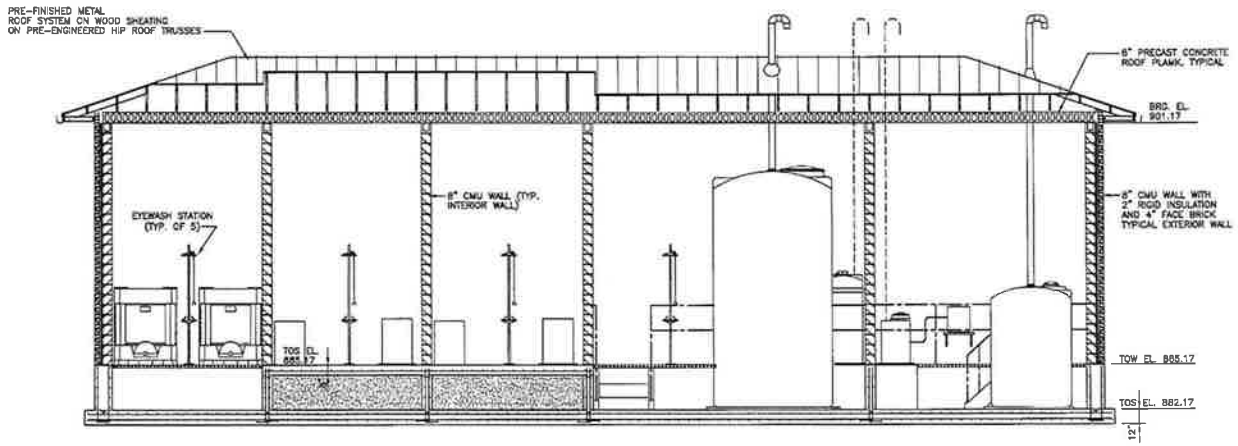

SECTION 1 / 20-ASM.01

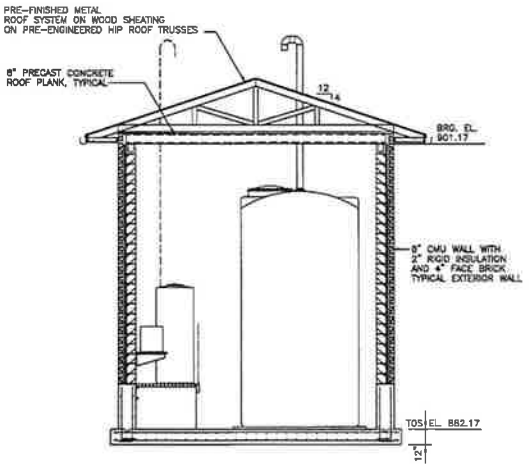

SECTION 3 / 20-ASM.01

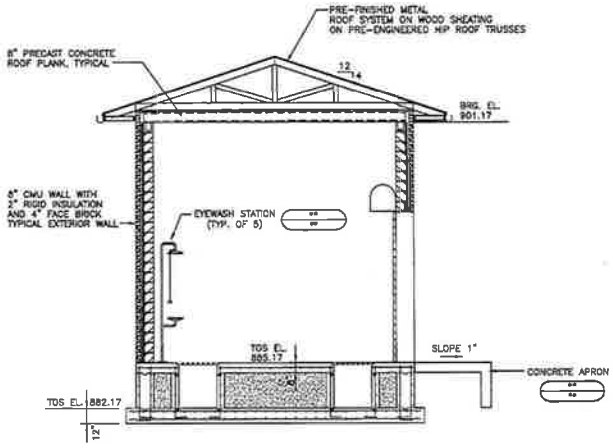

SECTION 2 / 20-ASM.01

DRAFT-NOT FOR CONSTRUCTION

NO.	REVISIONS	DATE

DATE: 9/08
DES BY: DP CHK BY: CJK
RECORD DRAWING
BY:
DATE:
CONTRACTOR:

CHEMICAL BUILDING SECTIONS

OWEN COUNTY WATER TREATMENT PLANT
CHEMICAL FEED SYSTEM IMPROVEMENTS
KENTUCKY AMERICAN WATER
OWENTON, KENTUCKY

STRAND ASSOCIATES, INC.®
ENGINEERS

SHEET
XXX
20-ASM.02
JOB NO. 5493.107

File: S:\LOU\5400--5499\5493\107\Acad\20-ASM.02.dwg Time: Sep 15, 2008 - 10:21am

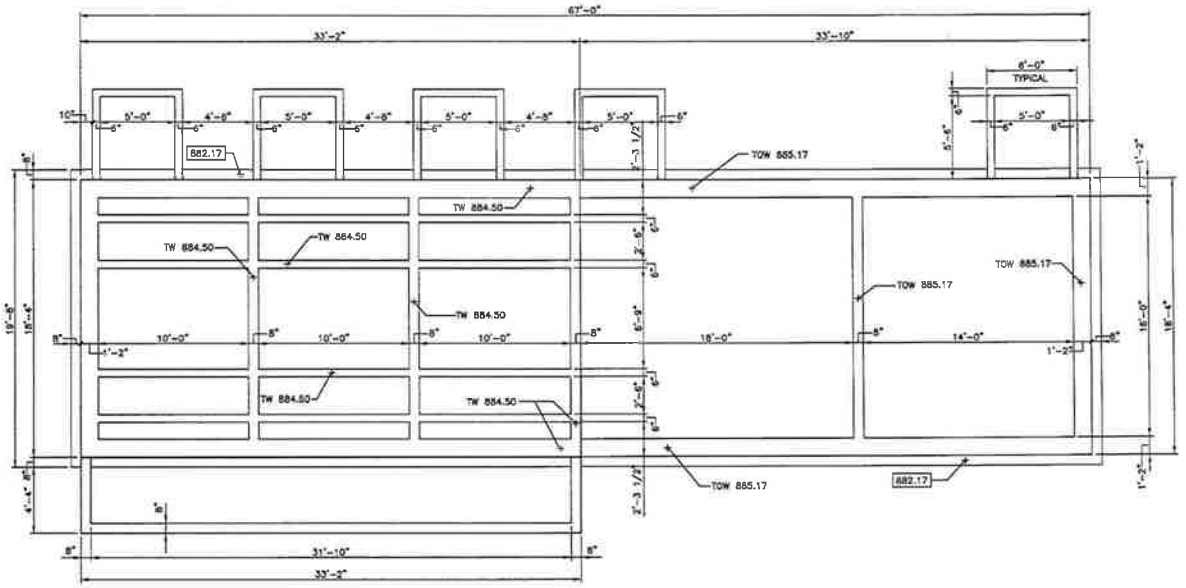

FOUNDATION PLAN

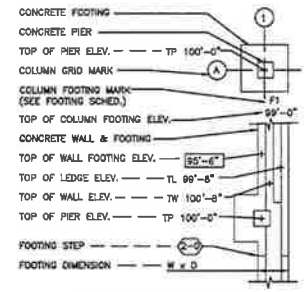

A / 20-AS.01 FOUNDATION LEGEND
NO SCALE

DRAFT-NOT FOR CONSTRUCTION

NO. | REVISIONS | DATE:

DES BY:TAP CHK BY:GJK DATE:9/08
RECORD DRAWING
BY:
DATE:
CONTRACTOR:

FOUNDATION PLANS

OWEN COUNTY WATER TREATMENT PLANT
CHEMICAL FEED SYSTEM IMPROVEMENTS
KENTUCKY AMERICAN WATER
OWENTON, KENTUCKY

STRAND ASSOCIATES, INC.® ENGINEERS

SHEET XX
20-AS.01
JOB NO. 5493.107

File: S:\LOU\5400--5499\5493\107\Acad\20-AS.01.dwg Time: Sep 12, 2008 - 4:41pm

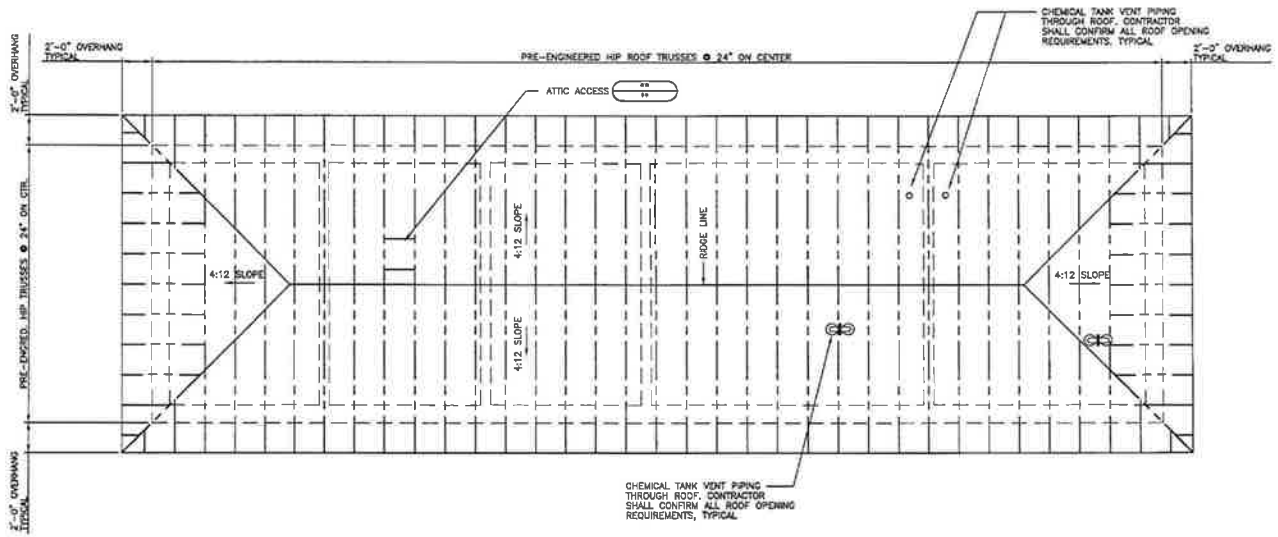

TRUSS FRAMING PLAN

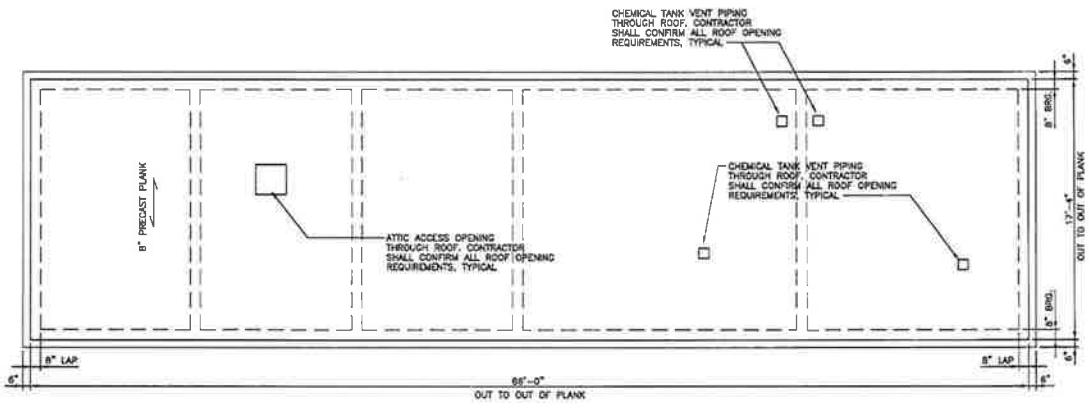

PRECAST FRAMING PLAN

DRAFT-NOT FOR CONSTRUCTION

NO.	REVISIONS	DATE

DATE: 9/08
DES BY: TJP CHK BY: CJK
RECORD DRAWING
BY:
DATE:
CONTRACTOR:

ROOF FRAMING PLANS

OWEN COUNTY WATER TREATMENT PLANT
CHEMICAL FEED SYSTEM IMPROVEMENTS
KENTUCKY AMERICAN WATER
OWENTON, KENTUCKY

STRAND ASSOCIATES, INC.® ENGINEERS

SHEET XXX
20-AS.02
JOB NO. 5493.107

File: S:\LOU\5400--5499\5493\107\Acad\20-AS.02.dwg Time: Sep 12, 2008 - 3:20pm

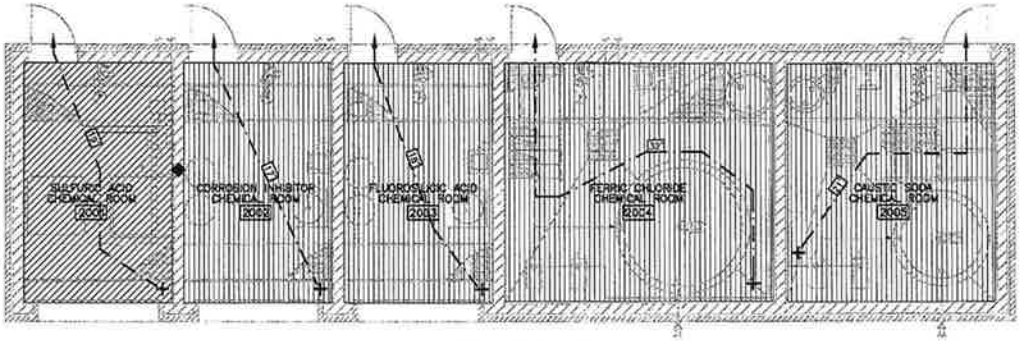

LIFE SAFETY PLAN

LIFE SAFETY LEGEND

- H-3 HIGH HAZARD OCCUPANCY
- H-4 HIGH HAZARD OCCUPANCY
- ## EXIT TRAVEL DISTANCE (FEET)
- EXIT ACCESS PATH
- ONE HOUR FIRE RATED WALL

BUILDING CODE INFORMATION

BUILDING CODE	2006 INTERNATIONAL BUILDING CODE
OCCUPANCY TYPE USE GROUPS	MIXED USE H-3: HIGH HAZARD H-4: HIGH HAZARD
CONSTRUCTION TYPE	TYPE VB
	ALLOWABLE / ACTUAL
NO. OF STORIES (BY CODE)	1 STORY / 1 STORY
ALLOWABLE HEIGHT (BY CODE)	40 FEET / 18 FEET
FIRE PROTECTION	AUTOMATIC SPRINKLERS
PUBLIC WAYS OR YARDS	ACCESSIBLE FROM 3 SIDES, MIN. 20-FOOT ACCESS WIDTH
ALLOWABLE FOOTPRINT AREA	A_t =5,000 S.F.
ACTUAL AREA	1,339 S.F. (SEE BREAKDOWN BELOW)
H-4 AREA	1,017 S.F.
H3 AREA	271 S.F.
TOTAL BUILDING S.F.	1,288 S.F.
BUILDING VOLUME	18,998= 56,000 C.F.
EXIT ACCESS TRAVEL DISTANCE PERMITTED	150 FEET (H-3) 175 FEET (H-4)
COMMON PATH OF EGRESS TRAVEL PERMITTED	25 FEET (H-3) 75 FEET (H-4)
NOTES	

CHEMICAL CLASSIFICATIONS

ROOM	CHEMICAL CLASSIFICATION	MAX CONTROL AREA QUANTITY	ACTUAL QUANTITY	ROOM OCCUPANCY RATING
SULFURIC ACID ROOM 2001	CLASS 2 WATER REACTIVE, CORROSIVE, HIGHLY TOXIC	50 LBS	4,600 LBS	H3
CORROSION INHIBITOR ROOM 2002	NON-HAZARDOUS	N/A	110 GAL	NOTE 1
FLUOROSILICIC ACID ROOM 2003	TOXIC, CORROSIVE	500 LBS	1,880 LBS	H4
FERRIC CHLORIDE ROOM 2004	CORROSIVE, TOXIC	500 GAL	5,000 GAL	H4
CAUSTIC SODA ROOM 2005	CORROSIVE, TOXIC	500 GAL	1,000 GAL	H4

NOTE:
1. ROOM 2002 IS BEING PREPARED AS AN H-4 CLASSIFIED ROOM AT OWNERS REQUEST. CURRENT CHEMICAL TO BE STORED THERE IS NON-HAZARDOUS.

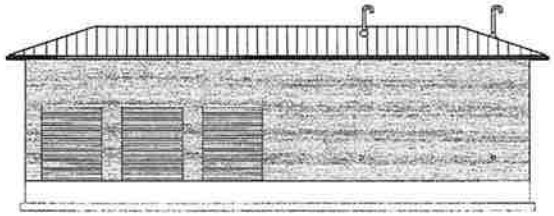

WEST SIDE OF CHEMICAL BUILDING

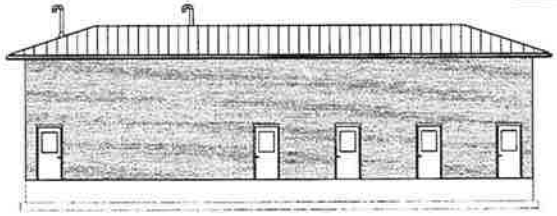

EAST SIDE OF CHEMICAL BUILDING

NORTH SIDE OF CHEMICAL BUILDING

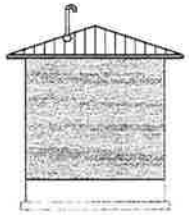

SOUTH SIDE OF CHEMICAL BUILDING

DRAFT-NOT FOR CONSTRUCTION

NO.	REVISIONS	DATE

DATE: 9/08
DES. BY: DP CHK. BY: CJK
RECORD DRAWING
BY:
DATE:
CONTRACTOR:

ELEVATION & LIFE SAFETY PLANS

OWEN COUNTY WATER TREATMENT PLANT
CHEMICAL FEED SYSTEM IMPROVEMENTS
KENTUCKY AMERICAN WATER
OWENTON, KENTUCKY

STRAND ASSOCIATES, INC. ENGINEERS

SHEET XX
20-AS.03
JOB NO. 5493.107

File: S:\LOU\5400--5499\5493\107\Acad\20-AS.03.dwg Time: Sep 12, 2008 - 3:21pm

KAW_R_PSCDR1#3_072312

DRAFT-NOT FOR CONSTRUCTION

GENERAL NOTES

① MOUNT PIPING ABOVE OVERFLOW OF BULK TANK.

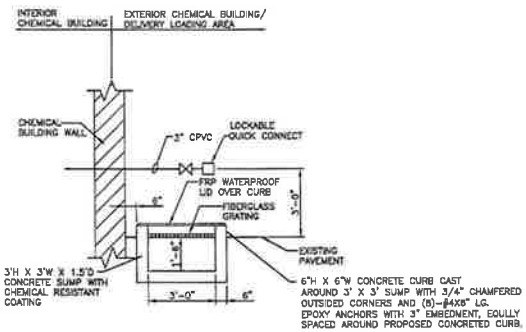

CHEMICAL DELIVERY CONTAINMENT SUMP
NO SCALE

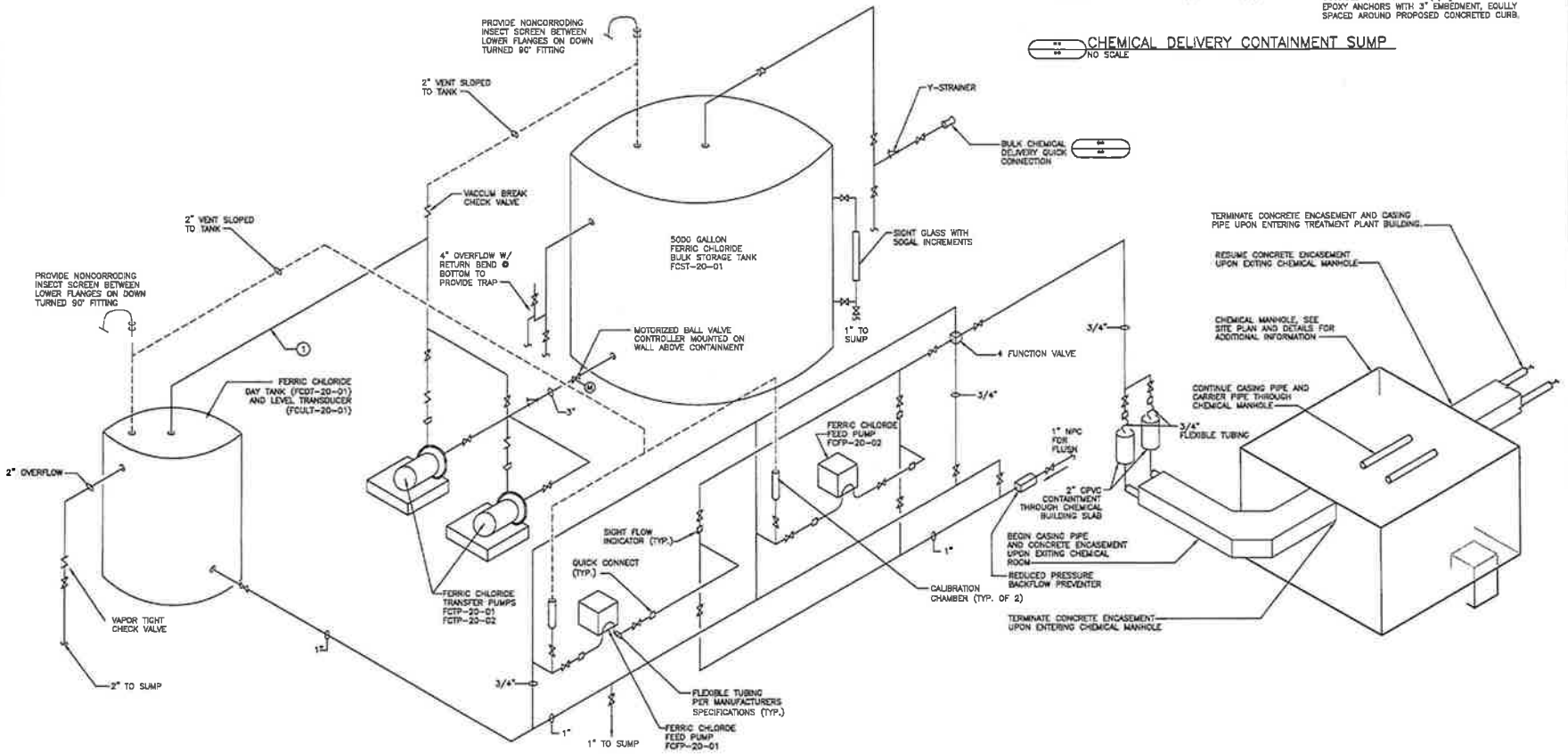

NO. | REVISIONS | DATE

DATE: 9/08 DES. BY: TJP CHK. BY: CJK
RECORD DRAWING
BY: DATE: CONTRACTOR:

FERRIC CHLORIDE
CHEMICAL FEED SCHEMATIC
OWEN COUNTY WATER TREATMENT PLANT
CHEMICAL FEED SYSTEM IMPROVEMENTS
KENTUCKY AMERICAN WATER
OWENTON, KENTUCKY

STRAND ASSOCIATES, INC.® ENGINEERS

SHEET XXX
20-M.01
JOB NO. 5493.107

File: S:\LOU\5400--5499\5493\107\Acad\20-M.01.dwg Time: Sep 12, 2008 - 4:31pm

GENERAL NOTES

① MOUNT PIPING ABOVE OVERFLOW OF BULK TANK.

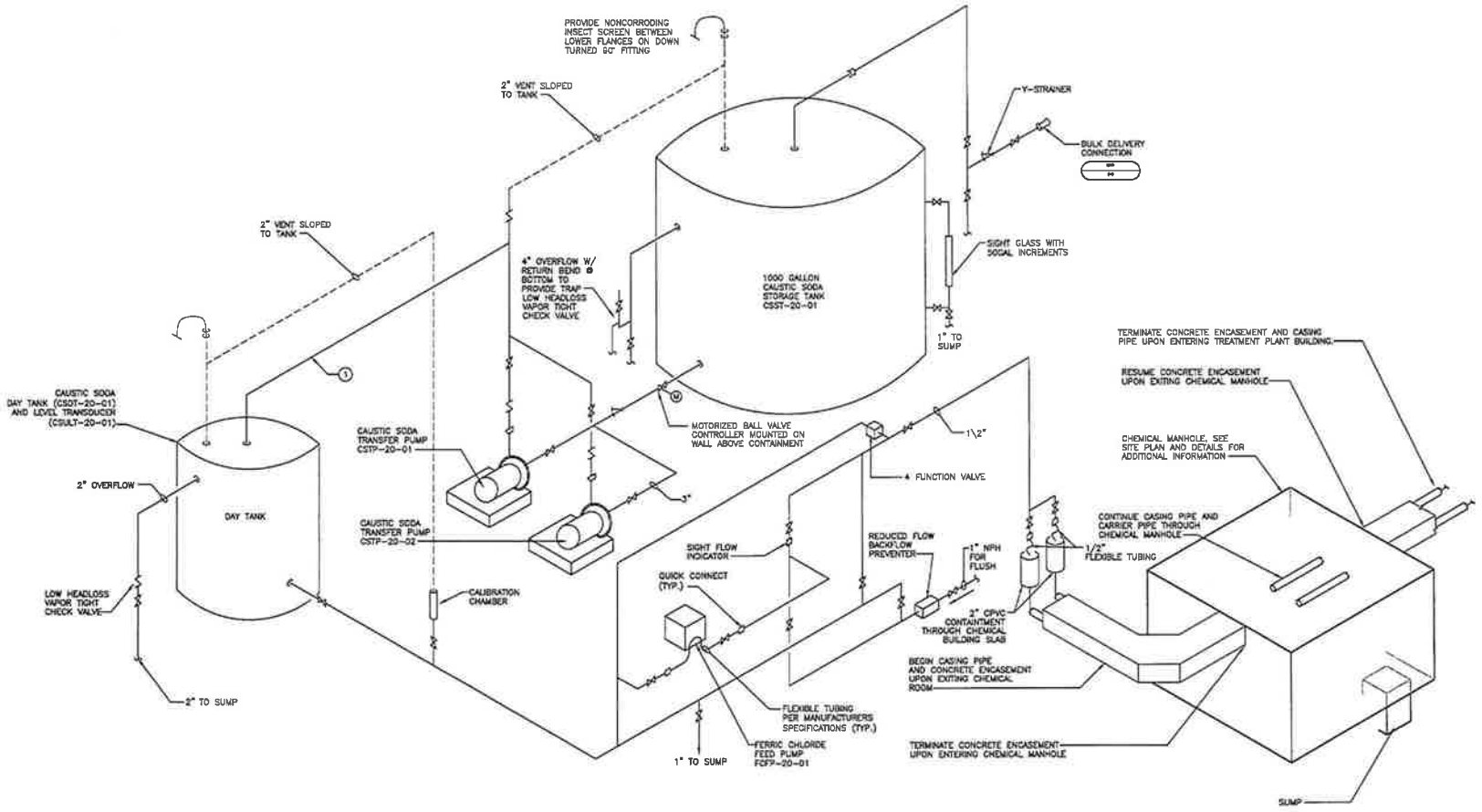

DRAFT-NOT FOR CONSTRUCTION

NO.	REVISIONS	DATE:

DATE: 9/08 DES BY: TJP CHK BY: CJK
RECORD DRAWING
BY: DATE: CONTRACTOR:

CAUSTIC SODA
CHEMICAL FEED SCHEMATIC
OWEN COUNTY WATER TREATMENT PLANT
CHEMICAL FEED SYSTEM IMPROVEMENTS
KENTUCKY AMERICAN WATER
OWENTON, KENTUCKY

STRAND ASSOCIATES, INC.® ENGINEER

SHEET: XXX 20-M.02
JOB NO. 5493.107

File: S:\LOU\5400--5499\5493\107\Acad\20-M.02.dwg Time: Sep 12, 2008 - 4:36pm

KAW_R_PSCDR1#3_072312

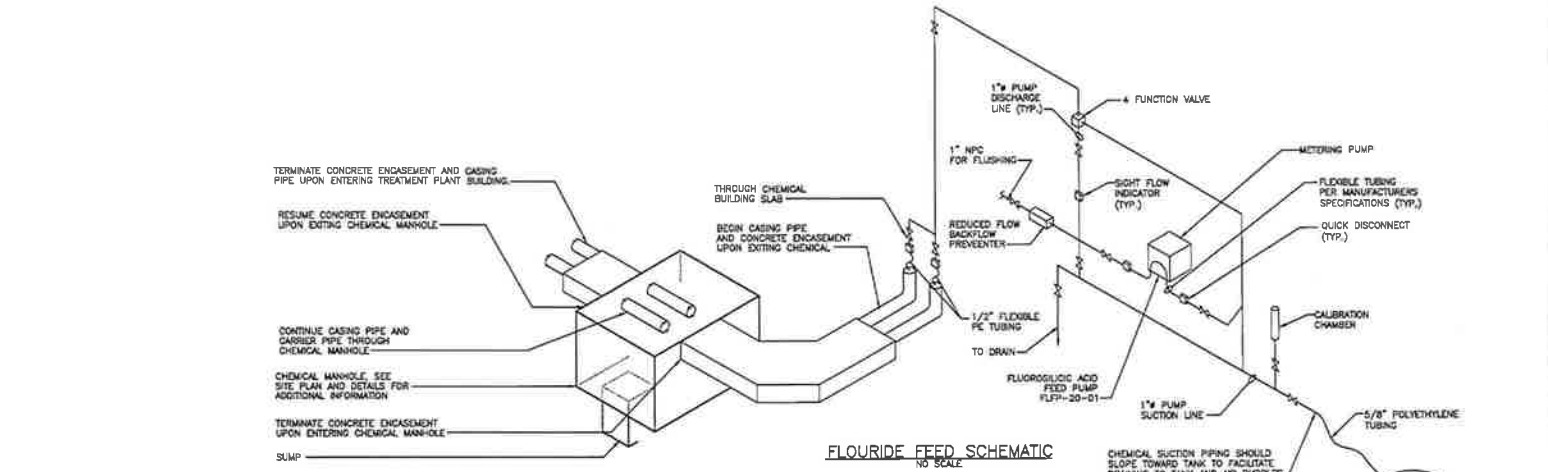

FLOURIDE FEED SCHEMATIC
NO SCALE

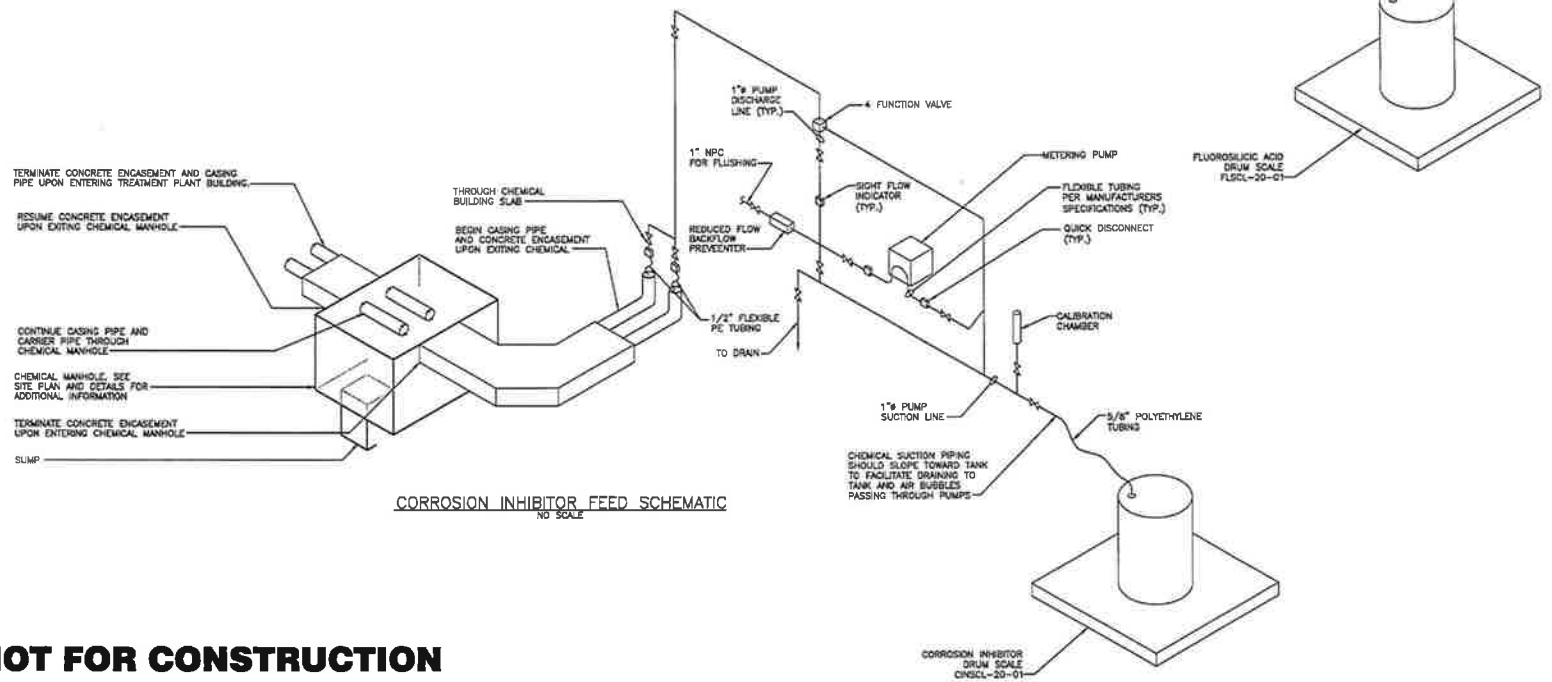

CORROSION INHIBITOR FEED SCHEMATIC
NO SCALE

DRAFT-NOT FOR CONSTRUCTION

NO. | REVISIONS | DATE:

DATE: 9/08 DES BY: AP CHK BY: CJK
RECORD DRAWING
BY:
DATE:
CONTRACTOR:

SULFURIC ACID
CHEMICAL FEED SCHEMATIC
OWEN COUNTY WATER TREATMENT PLANT
CHEMICAL FEED SYSTEM IMPROVEMENTS
KENTUCKY AMERICAN WATER
OWENTON, KENTUCKY

STRAND ASSOCIATES, INC.® ENGINEERS

SHEET XX
20-M.03
JOB NO. 5493.107

File: S:\LOU\5400--5499\5493\107\Acad\20-M.03.dwg Time: Sep 12, 2008 - 4:37pm

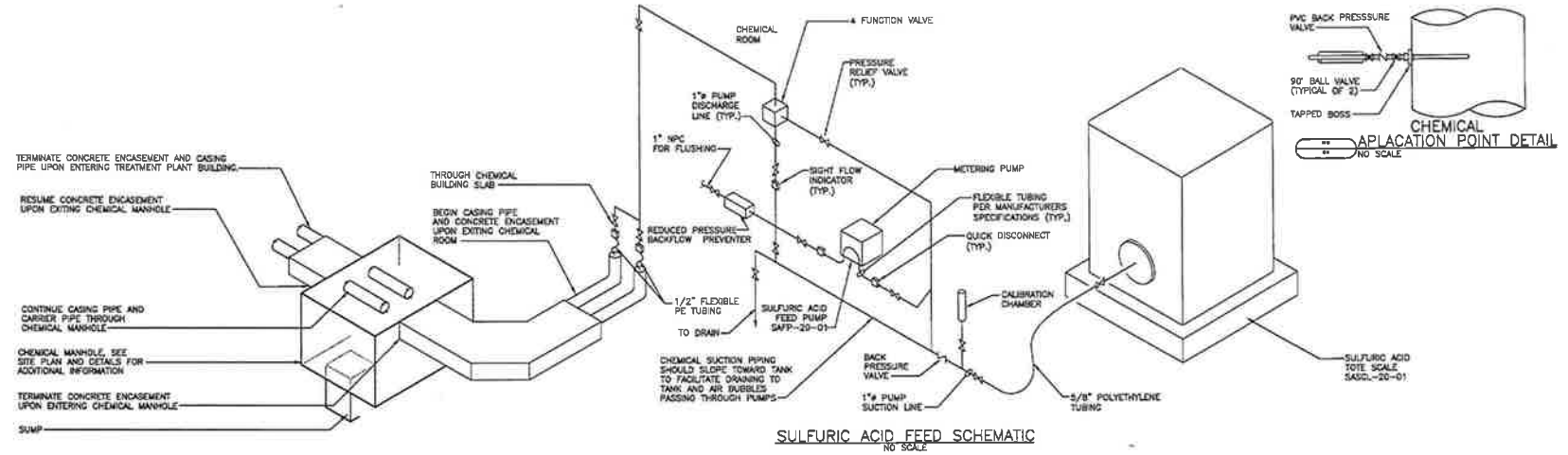

SULFURIC ACID FEED SCHEMATIC
NO SCALE

CHEMICAL APLACATION POINT DETAIL
NO SCALE

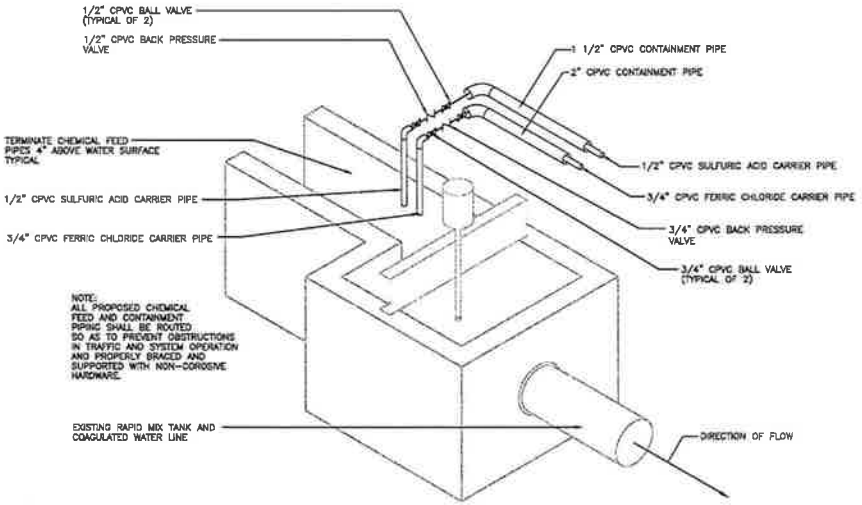

FERRIC CHLORIDE & SULFURIC ACID APPLICATION POINT
NO SCALE

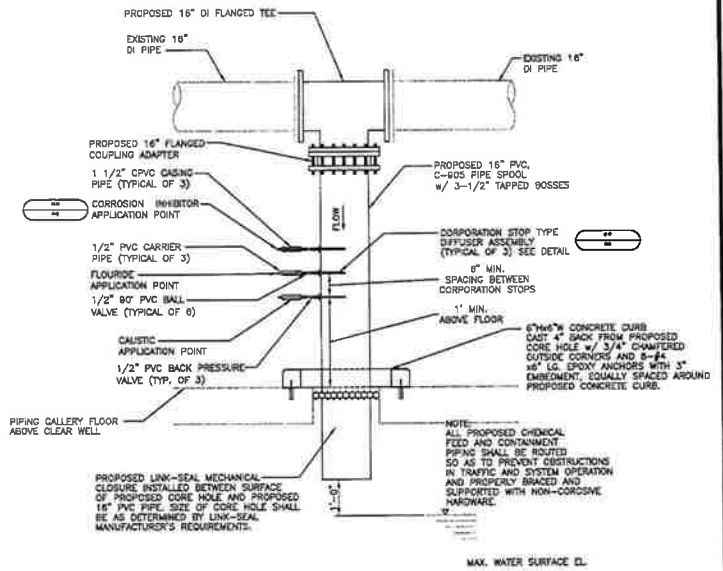

FILTER EFFLUENT PIPE REPLACEMENT
NO SCALE

DRAFT-NOT FOR CONSTRUCTION

NO.	REVISIONS	DATE

DATE: 9/08
DES BY: JP CHK BY: CJK
RECORD DRAWING
BY:
DATE:
CONTRACTOR:

CORROSION INHIBITOR, SULFURIC ACID AND FLUORIDE CHEMICAL FEED SCHEMATIC
OWEN COUNTY WATER TREATMENT PLANT
CHEMICAL FEED SYSTEM IMPROVEMENTS
KENTUCKY AMERICAN WATER
OWENTON, KENTUCKY

STRAND ASSOCIATES, INC. ENGINEERS

SHEET XX 20-M.04
JOB NO. 5493.107

File: S:\LOU\5400--5499\5493\107\Acad\20-M.04.dwg Time: Sep 12, 2008 - 4:39pm

KAW_R_PSCDR1#3_072312

KENTUCKY-AMERICAN WATER COMPANY
CASE NO. 2012-00096
COMMISSION STAFF'S FIRST REQUEST FOR INFORMATION

Witness: Lance Williams

4. Provide all reviews or estimates regarding the cost of needed improvements to the Owenton Water Treatment Plant that Kentucky-American commissioned or performed prior to January 1, 2006.

Response:

See attached.

IMPLEMENTATION APPROVAL PROPOSAL
WATER SYSTEM ACQUISITION
OWENTON, KENTUCKY
APRIL 22, 2005

1. EXECUTIVE SUMMARY

Kentucky American Water ("KAW") seeks SER CDC Implementation Approval to execute an Asset Purchase Agreement to acquire the water assets of the City of Owenton ("City") at a purchase price of $1,735,100. Assets include a 1.44 MGD WTP and approximately 42 miles of distribution system pipelines.

This opportunity has been in discussions/negotiations since 1999 with some aspects of this transaction preceding the current CDC process. On January 15, 2004, KAW executed an Asset Purchase Agreement with the City to acquire this 1,100-customer water system at a purchase price of $1,852, 626. A Closing never ensued due to the following factors.

- KDOH scheduled a highway widening project which required the relocation of various water mains which would be a reimbursable expense if owned by Owenton but not so if owned by KAW. On July 12, 2004, KAW executed an amendment to the agreement to exclude the effected assets from the acquisition.
- KAW was advised to seek PSC approval of this transaction however KAW had a pending general rate filing before the PSC at that time.
- Condemnation activities in Fayette County.
- Significant change in internal ROCE hurdle rate (original financial model at 8%).

KAW has been successful in renegotiating the January 15, 2004 Agreement to accomplish the following.

- Acquire all current water assets except DOH impacted assets (to be acquired at a later time),
- Term of office lease reduced from 40 years to 10 years with three 10-year renewals at KAW option,
- KAW to adopt City's rates which are to be increased 21.0% prior to Closing,
- KAW agrees not to increase rates within 24 months post Closing. A 12.6% rate increase is proposed in Year 3 to accommodate $840,000 in planned capital improvements.
- KAW will employ all employees of City's wastewater utility with the exception of two employees who will remain with the City and be leased to KAW for a definite period due to existing pension issues,
- KAW agrees to schedule a Closing with 30 days of final Order,
- Financial model meets current ROCE hurdle rate for five years modeled.

The City's water system is in overall fair condition. The WTP is relatively new however the distribution system is aged and in need of attention not unlike may municipal systems throughout the US. Owenton has received several violations for elevated THMs due to its source of supply. A new intake project along with treatment modifications will adequately address this problem. Capital expenditures of $1,500,000 over the next five years have been modeled to accommodate modifications to the WTP and various distribution system improvements.

RECOMMENDED ACTION:

KAW recommends SER CDC approval to . . .

- Execute an asset purchase agreement with the City of Owenton to acquire the City's wastewater assets at a purchase price not to exceed $1,735,100 plus related acquisition costs of $45,500,
- Bill customers the rates and charges to be implemented by the City prior to closing,
- Defer any future rate increases to Owenton sewer customer for 24 months after the Closing date,
- Make capital improvements of $1,500,000 over the next five years,
- Transition the Owenton billing and call center function to Alton by December 31, 2005.

- **IMPLEMENTATION APPROVAL PROPOSAL SUMMARY FORM**

1. Opportunity Details	
Opportunity Name	Owenton Water Acquisition
Opportunity Type	Acquisition
Region	Americas – Southeast Region
Business unit	Kentucky American Water
Project Champion	Dan Bickerton
Bid Manager	Mike Guntrum

2. Description of Opportunity	
Type and Scope	Asset Purchase
Client (Contractual)	City of Owenton
Client (End User)	Customers of Owenton Water Utility
Vendor / Purchaser	NA
Location & Country	Owen County, Kentucky, USA
Potential partners	City of Owenton
Length of Contract	Indefinite

3. Financial Summary			
Size of project ($m)	$3.273	AW Investment ($m)	$3.273
Target AW IRR%	10.6%	AW NPV ($k)	$1134.5
PBT/PAT	$255.5/$124.9	ROCE	11.6%
Operating Profit	$244.7	EBITDA ($k)	$309.1
Pay-back period		EVA	$61.9

4. Timetable of Expected development	**Date**
Sign Deal /Contract	April 26, 2005
Live/Start Date / Sale Date – 30 days after PSC Order	May 31, 2005

5. Submission Checklist	
Bid Approval Received?	Sept. 22, 2003
Compliance with Bid Approval agreed terms?	Yes
This page completed, signed and faxed to Regional CDP Administrator	
Signed ROM summary sheet included	

Implementation Approval **Owenton, KY – Water Acq.**

Approvals Signatures

Project Champion …… Date……

SUBSIDIARY MANAGEMENT COMMITTEE (Developing Region)

Subsidiary President …… Date……

Subsidiary CFO …… Date……

Subsidiary Service Delivery VP …… Date……

Subsidiary Legal Counsel …… Date……

SUBSIDIARY MANAGEMENT COMMITTEE (Operating Region, if applicable)

Subsidiary President …… Date……

Subsidiary CFO …… Date……

Subsidiary Service Delivery VP …… Date……

Subsidiary Legal Counsel …… Date……

REGIONAL CDP COMMITTEE APPROVAL (If applicable)

John Young (Chair) …… Date……

James Kalinovich (Finance) …… Date……

George Patrick (Legal) …… Date……

Stephen Schmitt (Technical) …… Date……

Andrew Chapman (Strategy) …… Date……

REGIONAL BOARD COMMITTEE APPROVAL (If applicable)

Jim McGivern (COO) …… Date……

John Bigelow (CFO) …… Date……

1. CDC COMMENTS/CONDITIONS RAISED AT BID APPROVAL STAGE ANSWERED

- The current CDC was not involved in the original bid approval process, therefore, a brief background of this opportunity is provided. Owenton is the county seat for Owen County, which is in north central Kentucky, approximately 30 miles north of Frankfort, and 50 miles southwest of Cincinnati, Ohio. The population of Owenton, according to the 2000 census was 1,387. The area outside the City is mostly rural farmland, but is highly developable with the advent of water served by KAW's Northern Division.

- Owenton's water system serves approximately 1,100 customers including KAW. KAW purchases 65% of the City's water sales. Source of supply consists of two City-owned impoundments supplemented by an intake on Severn Creek. This intake will be relocated to the Kentucky River which will eliminate the need to use the impoundments. The WTP utilizes a solids contact upflow clarifier (Claricone) for flocculation, solids removal and clarification. Rapid filtration occurs through dual-media, conventional sand filters (2). The WTP has a design capacity of 1.44 MGD and currently averages approximately 0.7 MGD.

- There is potential for customer growth throughout Owen County spurred by a willingness of the County Judge Executive to seek grant funds to finance water extension projects.

- On September 22, 2003, the KAW's Board of Directors unanimously approved the acquisition of the City of Owenton's water system and on January 15, 2004 an Asset Purchase Agreement was executed with an expected June 30, 2004 Closing.

- Prior to the previously planned closing, CDC members required this transaction to be filed with the Kentucky PSC for approval of asset transfer, sale/leaseback and use fee provisions. This transaction will be filed with the PSC and is conditioned on PSC approval.

2. ROBUSTNESS

2.1 Bid & Implementation Profile

3.1.1. Market Environment

- KAW will be sensitive to public relations activity in light of FLOW's potential interest and recent condemnation activity in Fayette County. A modest celebration will be held after Closing to memorialize the transaction (Owenton's request).

- A timely Closing is critical to the future success of this opportunity. Owenton officials have made it clear that if this transaction is not closed within a reasonable period, they will cease further discussions with KAW

- There are no direct competitors for the acquisition of the City's system, however HMB and other consulting firms have expressed an interest in providing O&M services for the City.

3.1.2. Contract

- 2 employees (sewer plant operator & office manager) will not be employed by KAW at Closing but will remain employed by the City and leased to KAW for a definitive period of time. In both instances, the issue revolves around current state pension plan
- Office in Owenton to be leased for a period of 10 years with 3 10-year renewals at KAW's option. KAW will consolidate its Tri-Village office with the Owenton office.
- No franchise fee for 20 years
- No increase in Owenton's sewer rates for 24 months post closing.
- Owenton to increase sewer rates 22.5% prior to closing.
- Owenton expects to close very quickly.
- Reduced purchase price in order to meet internal hurdle rate and reduce sewer rate increase.

- Owenton Board to remain in place to receive grants and low interest financing for future sewer project in Owen County under a public-private partnership.
- Owenton to pursue the funding, design and construction of a new raw water intake on the Kentucky River. KAW will pay a use fee to the City to fund the annual debt service requirements. The City has already received two grants to fund this project.
- KAW is at risk for failure to perform on the January 24, 2004 agreement, therefore, the execution of this new agreement is critical

3.1.3. Commercial

- KAW will be responsible to maintain an office in Owenton. The existing Tri-Village office will be consolidated.
- Antenna lease opportunities will be pursued once Closing has taken place.
- Owenton Board will remain in existence to seek public funding assistance in future water extension projects.
- KAW can exit this agreement as deal is contingent on KAW Board approval.

3.1.4. Business Risks

- The Risk Register is included within Appendix 1.

- The most significant risks associated with the Owenton water and sewer acquisition pertain to the condemnation issues currently being negotiated in Lexington. It was perceived that the purchase price offering for Owenton could be used as propaganda to support FLOW's position. This issue appears to be stabilized at the current time.

- Another risk revolves around KAW's ability to close this transaction in a timely manner. Owenton officials are overly anxious to complete this as soon as possible and are wishing for a May 31, 2005 closing.

- In addition to a timely Order from the PSC, an Order without any material changes to the joint application filing is a risk we bear in this arrangement with Owenton as well as all regulated transactions. Compounding the issue is the AG investigation into impropriety between the PSC and state utilities which has the essentially limited access to Staff and Commissioners prior to filings. Lindsey Ingram, Jr. is preparing an agreement and joint application that will attempt to maneuver this arrangement as smoothly as possible through the PSC.

- A serious legal risk exists up until the time that Owenton signs a new asset purchase agreement. KAW could be liable for failure to perform the January 15, 2004 agreement.

- Two-year rate moratorium could present a degree of risk within the water utility although language has been carefully discussed so as not to preclude a rate filing within the two year period. A rate adjustment is modeled for year 3. If Owenton remains a stand-alone entity, then cap ex will be deferred until such time that a rate filing is necessary.

- Timing of WTP improvements with the completion of the new Kentucky River intake as well as the estimated costs of these improvements represents typical risks involved with many projects. Agreement adequately protects KAW in the event the City fails to perform.

2.2 Financial

3.2.1. Financial Shape

- ROCE averages 11.6% for 5 years post closing.
- NPV of transaction with cap ex = $1,134,500.
- Value creative each year of model.

- City to implement 21.0% rate increase prior to Closing. One rate increase (12.6%) is contemplated in year 3 of this agreement due to anticipated cap ex of $840,000.
- Low growth (1%) is modeled although growth is expected to exceed this rate.
- See Appendix 2 for detailed financial information.

3.2.2. Investment

- Cap ex of $1,500,000 is expected to be sufficient within the next 5 years.

3.2.3. Source of Funds

- Purchase price and costs of acquisition will be financed initially through short-tem borrowings while permanent financing is anticipated at the traditional 60/40 capitalization ratio.
- Annual cap ex is financed through cash generated from operations.
- There are no tax incentives available to KAW.

2.3 Transition + Implementation Management Plan

- Closing is anticipated within 30 days of receiving a non-appealable Order from the PSC.
- 7 of 9 existing City employees will be employed at Closing. The remaining 2 employees will continue their employment with the City for a definite period of time to accommodate their respective state pensions. There is no guarantee of employment upon expiration of the limited term leased employee contract.
- Customer contact and billing functions will be transitioned to the Alton Call Center by December 31, 2005.

3.3.1. Resources

- Existing City Superintendent will remain with KAW as a supervisor and is very capable of managing this system. He possesses a class II and III water license as well as a class II wastewater license. He has been employed in this capacity by the City since 1985.
- Dillard Griffin will be responsible for treatment facilities while network responsibilities will be managed through Fred White.
- KAW's Northern Division supervisor is capable of managing additional office/clerical functions associated with this transaction.

3.3.2. Commercial

- The relationship with the current Mayor, Board, City Council, and County Judge is good but is also somewhat strained due to the delay in closing this transaction.
- One City Council member is opposed to the transaction while all others are in support.
- The DOW supports KAW's acquisition of the water system due to the DBP issues facing the City in the past.
- The PSC remains the lone entity with little opportunity to lobby due to the AG investigation. An asset purchase agreement has been carefully prepared by Lindsey Ingram, Jr. to facilitate as timely an Order as possible.
- This transaction is consistent with AW's business development growth strategy of pursuing tuck-in acquisitions

3.3.3. Asset Management

- A significant portion of the cap ex is directed to WTP improvements. Initially improvements to the chemical feed systems will be necessary to address the DBP issues and ultimately an additional Claricone or similar unit will be necessary upon completion of the Kentucky River intake project.
- This acquisition will provide KAW with access to Pool 2 of the Kentucky River which could provide some future relief to Lexington's source of supply limitations.

3. ADDITIONAL INFORMATION

Appendix 1 Risk Register
Appendix 2 Financial
Appendix 3 Assumptions
Appendix 4 Agreement Comparison

Appendix 1 – Risk Register

Appendix 2 – Financial Summary

	@Acq. Per Books	Forecast Year 1 (05)	Forecast Year 2 (06)	Forecast Year 3 (07)	Forecast Year 4 (08)	Forecast Year 5 (09)
ASSETS:						
Utility Plant	$4,265,862	$4,265,862	$4,551,620	$4,805,920	$5,655,420	$5,754,920
Additions (cost to acq is initial)	$0	$285,758	$254,300	$849,500	$99,500	$79,500
Accum depreciation (adjusted)	($1,460,521)	($1,560,631)	($1,677,051)	($1,794,947)	($1,930,561)	($2,066,175)
Net Utility Plant	$2,805,341	$2,990,989	$3,128,869	$3,860,473	$3,824,359	$3,768,245
Cash		$1	$0	($0)	$40,366	$100,083
Acq Adjustment in Price	$147,662	$140,279	$132,896	$125,513	$118,130	$110,747
Current Assets	$5,383	$5,383	$5,383	$5,383	$5,383	$5,383
CWIP	$32,240	$0	$0	$0	$0	$0
Total Assets	$2,990,626	$3,136,652	$3,267,148	$3,991,369	$3,988,238	$3,984,458
LIABILITIES & EQUITY:						
Current Liabilities	$0	$0	$0	$0	$0	$0
Long Term Debt						
Issued	$1,068,386	$1,158,859	$1,242,254	$1,677,126	$1,678,686	$1,680,246
Common Equity	$712,257	$803,805	$886,934	$1,209,712	$1,238,450	$1,266,539
Total Cap	$1,780,643	$1,962,664	$2,129,188	$2,886,838	$2,917,136	$2,946,785
Net Working Capital	$0	$0	$0	$0	$0	$0
Addtil Amort CIAC	$0	$0	$0	$0	$0	$0
Gross CIAC	$1,772,487	$1,779,637	$1,786,787	$1,796,537	$1,806,287	$1,816,037
Accum Amortization CIAC	($562,504)	($605,649)	($648,828)	($692,006)	($735,185)	($778,363)
Total Cap & Liabilities	$2,990,626	$3,136,652	$3,267,148	$3,991,369	$3,988,238	$3,984,458

	Forecast Year 1 (05)	Forecast Year 2 (06)	Forecast Year 3 (07)	Forecast Year 4 (08)	Forecast Year 5 (09)
Total Revenue/Income	$899,257	$903,357	$1,023,948	$1,029,539	$1,035,130
O&M, Depr, Taxes Other	$647,090	$675,451	$699,728	$727,441	$737,364
Pre-Tax UOI	$252,168	$227,907	$324,220	$302,098	$297,766
Interest Expense	$26,654	$27,613	$87,581	$100,674	$100,768
Pre-Tax Income	$225,514	$200,294	$236,639	$201,424	$196,998
Income Tax Rate	41.33%	41.33%	41.33%	41.33%	41.33%
Income Taxes	$93,205	$82,781	$97,803	$83,248	$81,419
Income After Tax	$132,309	$117,513	$138,836	$118,176	$115,579
Acq. Adj. Amortization	$7,383	$7,383	$7,383	$7,383	$7,383
Net to CE	$124,926	$110,130	$131,453	$110,793	$108,196
Pre-tax Interest Coverage	9.46	8.25	3.70	3.00	2.95
ROE YE Equity	15.54%	12.42%	10.87%	8.95%	8.54%
Beginning CE		$803,805	$886,934	$1,209,712	$1,238,450
New Equity	$772,573	$55,597	$289,915	$1,040	$1,040
Net Income	$124,926	$110,130	$131,453	$110,793	$108,196
Dividends	$93,694	$82,597	$98,590	$83,095	$81,147
RE	$31,232	$27,533	$32,863	$27,698	$27,049
CE 12/31	$803,805	$886,934	$1,209,712	$1,238,450	$1,266,539

Implementation Approval **Owenton, KY – Water Acq.**

	Forecast Year 1 (05)	Forecast Year 2 (06)	Forecast Year 3 (07)	Forecast Year 4 (08)	Forecast Year 5 (09)
Cash Flows from Operating Activities:					
Net to CE	$124,926	$110,130	$131,453	$110,793	$108,196
Adjust:					
AFUDC	$25,058	$4,912	$24,664	$0	$0
Depreciation	$56,965	$73,242	$74,717	$92,436	$92,436
Amortization	$7,383	$7,383	$7,383	$7,383	$7,383
Net Cash from Operations	$164,216	$185,842	$188,889	$210,611	$208,014
Cash Flows from Investing Activities:					
Acquisition/Cost to Acquire	($1,780,643)				
Construction Expenditures	($228,460)	($249,388)	($824,836)	($99,500)	($79,500)
Net Cash from Investing	($2,009,103)	($249,388)	($824,836)	($99,500)	($79,500)
Cash Flows from Financing Activities:					
Add: Tap Fees	$7,150	$7,150	$9,750	$9,750	$9,750
Long Term Debt	$1,158,859	$83,395	$434,872	$1,560	$1,560
Common Stock	$772,573	$55,597	$289,915	$1,040	$1,040
Deduct:					
Dividends	($93,694)	($82,597)	($98,590)	($83,095)	($81,147)
Net Cash from Financing	$1,844,888	$63,545	$635,947	($70,745)	($68,797)
Cash for Year	$1	($1)	($0)	$40,366	$59,717
Cash 1/1	$0	$1	$0	($0)	$40,366
Cash 12/31	$1	$0	($0)	$40,366	$100,083

	Forecast Year 1 (05)	Forecast Year 2 (06)	Forecast Year 3 (07)	Forecast Year 4 (08)	Forecast Year 5 (09)
Net Operating Result:					
Revenues	$899,257	$903,357	$1,023,948	$1,029,539	$1,035,130
Less:					
O & M Expense	$541,327	$551,217	$562,227	$572,787	$583,593
Depreciation	$56,965	$73,242	$74,717	$92,436	$92,436
Amortization	$7,383	$7,383	$7,383	$7,383	$7,383
General Taxes	$1,308	$1,313	$1,489	$1,497	$1,505
Property Taxes	$47,489	$49,679	$61,295	$60,721	$59,830
Net Operating Result	$244,785	$220,524	$316,837	$294,715	$290,383
Accumulated AFUDC	$25,058	$29,970	$54,634	$54,634	$54,634
Invested Capital:					
Total Capital (Adjusted for UPAA & AFUDC)	$1,937,606	$2,099,219	$2,832,204	$2,862,501	$2,892,150
Less:					
Cash	$1	$0	($0)	$40,366	$100,083
Invested Capital	$1,937,605	$2,099,218	$2,832,204	$2,822,135	$2,792,067
Average Invested Capital	$1,814,421	$ 2,018,412	$ 2,465,711	$ 2,827,170	$ 2,807,101
Return on Invested Capital	13.49%	10.93%	12.85%	10.42%	10.34%
Hurdle Rate	10.08%	10.08%	10.08%	10.08%	10.08%
Operating Result to Meet Hurdle	$ 182,894	$ 203,456	$ 248,544	$ 284,979	$ 282,956
Value Contribution	$ 61,891	$ 17,068	$ 68,293	$ 9,736	$ 7,427

APPENDIX 3 - Assumptions

- Owenton Board and City Council will agree to the terms and conditions of the agreement.
- DOW will support this proposal.
- PSC will approve the asset transfer
- Estimated cap ex will be sufficient to operate the Owenton system.
- Actual customer usage for the twelve months ended March 2005 will be consistent with future years.
- Water loss anticipated to be consistent with Owenton's actual water loss rate.
- Customer growth is expected to be relatively low, 1% per year.
- General inflation rate – 2.5%.
- Interest on long term debt – 6.0%.
- ROE – 10.25%.
- Effective tax rate – 41%.
- One rate increase anticipated within the 5-years post closing.
- No significant maintenance expense modeled.
- Owenton will complete the Kentucky River intake in a timely manner and not in excess of forecasted use fee.
- Closing will occur at or around May 31, 2005 assuming PSC Order received in a timely manner.

Appendix 4 – Agreement Comparison

HIGHLIGHTS OF JANUARY 2004 ASSET PURCHASE AGREEMENT

- Signed by all parties January 15, 2004.
- KAW to purchase Owenton's water & wastewater assets for $2,851,478.
- KAW to transfer assets back to Owenton at Closing in exchange for a capital lease. KAW agreed to pay an in-lieu-of-property-tax payment in order for Owenton to obtain a $300,000 loan with which to make improvements to the water system.
- KAW must employee all Owenton water & wastewater employees (10).
- KAW will not acquire the City's two reservoirs but may withdraw water at no additional fee.
- Lease office in Owenton for 40 years.
- Owenton agrees to pay any grant repayment requirements.
- 20-year franchise at no cost to KAW.
- KAW agrees to pay a use fee to Owenton to support a loan necessary for Owenton to construct a new intake on the Kentucky River. The loan provided the match for two additional grants for this project.
- Owenton Water/Sewer Board to remain in place as owner of new intake and future public partner in Owen County main extension projects.
- Financial model met 8% ROCE target.

Other Agreed to Provisions:

- KAW adopts Owenton's rates.
- No rate increase for 3 years
- Two employees will remain with the City and be contracted to KAW because of negative impact on their state pension.

HIGHLIGHTS OF JULY 2004 AMENDMENT TO PURCHASE AGREEMENT

- Excluded certain water and wastewater facilities from Asset Purchase Agreement.
- Major highway relocation project necessitated the relocation of various mains from public right-of-way.
- Municipal utilities are reimbursed for this relocation cost while private utilities are not.

HIGHLIGHTS OF CURRENT NEGOTIATIONS

- Agreement currently being reviewed.
- KAW to purchase Owenton's water & wastewater assets for $2,595,500 or $255,978 less than previous purchase price.
- No asset transfer or capital lease.
- KAW must employee all Owenton water & wastewater existing employees(9), however, two employees will be retained by the City and will be contracted to KAW for a definitive period of time with no guarantee of employment beyond agreed to date.
- KAW will not acquire the City's two reservoirs but may withdraw water at no additional fee.
- Lease office in Owenton for 10 years with 3 10-year renewals at KAW option.
- Owenton agrees to pay any grant repayment requirements.
- 20-year franchise at no cost to KAW.
- KAW agrees to pay a use fee to Owenton to support a loan necessary for Owenton to construct a new intake on the Kentucky River. The loan provided the match for two additional grants for this project.
- Owenton Water/Sewer Board to remain in place as owner of new intake and future public partner in Owen County main extension projects.
- KAW agrees not to increase rates for 24 months immediately after closing.
- Owenton agrees to increase rates immediately prior to closing. 22% water & 23% sewer.
- Financial model meets 10.08% ROCE target.

Risk Register

Risk Register created on: 14-Apr-05

Reference variables:
Ave. Op. Result: £0 million
Equity: £0 million

Unhide columns I to P to view the quantification of key risks to be included in the Key Risks Form.

Region Southeast Region

Business Unit Kentucky American Water

Level of impact (x)	Net Loss Category
xxxx	
	B
	C
	D
	E

Date Risk Changed	Subcategory	Business Phase	Risk No.	Risk Description (Cause, Uncertainty, Effect)	Gross loss category	Gross Probability category (1-4)	Severity score	Level of impact (x)	Risk Owner	Risk Control (A,R,M,T)	Risk Control Strategy	Action Owner	Net Loss Category	Net Probability category (1-4)	Assumptions
14-Apr-05	Market structure	Project Development	OS001	Resistence to privatization by elected officials	E	1	5	x	BD, KY	M	Educate and inform officals of more costly alternatives & maintain close relations	BD, KY	A	1	Existing relations will be maintained and will be strong. Timely closing.
14-Apr-05	Consumers	Project Development	OS002	Customers support of KAW's proposal.	C	2	6	x	BD, KY	M	Inform public through supportive board members and external communications effort.	BD, KY	B	1	Board will work cooperatively with KAW & inform the public
14-Apr-05	Business Development	Project Development	OS003	Strategic fit within project and KAW water & wastewater long-term objectives	E	2	10	x	KY	M	Implement regional wastewater strategy	KY	A	1	Timely Closing of water & wastewater
14-Apr-05	Project Delivery	Project Delivery/Transition	OS004	Closing completed in a timely manner	E	2	10	x	BD, KY, Legal	M	Frequent communication with Owenton Board & PSC	BD, KY, Legal	C	2	Board will work cooperatively with KAW
14-Apr-05	Contractual	Operational	OS005	Contract conditions i.e. two year rate moratorium	B	2	4	x	BD, KY	A			B	2	Assets condition and cost experience do not materially change.
14-Apr-05	Client management	Project Delivery/Transition	OS006	State of relationships with Owenton officials and employees	C	2	6	x	BD, KY	M	Frequent communication with Owenton Board, City council & employees	BD, KY	B	2	Timely Closing.
14-Apr-05	Network Management	Operational	OS007	Management of I & I	A	3	3	x	KY	M	Intitiate formal I&I control program	KY	A	2	Ample plant capacity available
14-Apr-05	Marketing & Reputation Management	Project Delivery/Transition	OS008	Recent history of hostile media coverage in nearby Lexington, i.e. condemnation issue	B	4	8	x	KY	M	Maintain relationships with Owen County and Owenton officials and local media outlets	KY	B	2	Owen County and Owenton officials will activley support transaction
14-Apr-05	Human Resource	Project Delivery/Transition	OS009	Employee pension issues	A	3	3	x	BD, KY, Legal	M	Employment contracts for several employees with pension issues	BD, KY, Legal	A	2	Employees will agree with contract approach
14-Apr-05	Asset Management including Property	Operational	OS010	Condition of existing assets	B	2	4	x	KY	A					Reliance on due diligence investigations
14-Apr-05	Investment management and M&A	Project Development	OS011	Modeling accuracy	B	2	4	x	BD, KY	M	Comnprehensive due diliengence and continual communication with Owenton staff	BD, KY	B	2	Reliance on due diligence investigations
14-Apr-05	Regulatory and legal environment	Project Delivery/Transition	OS012	Relationships with KY PSC	D	1	4	x	BD, KY, Legal	M	Well prepared applications and timely responses to data requests.	BD, KY, Legal	C	1	Staff will support filing.
14-Apr-05	Social	Project Delivery/Transition	OS013	Pressure from FLOW.	B	3	6	x	KY	M	Maintain good relations with Owenton & Owen County officals. Plan for media & customer comments.	KY	B	1	Owenton officals will continue to acitvley suppor the transaction.
14-Apr-05	Project Delivery	Project Delivery/Transition	OS014	PSC approval of calculation of amortization of CIAC	E	2	10	x	KY, Legal	M	KY PSC allows the amortization of CIAC and therefore should recognize this adjustment	BD, KY, Legal	A	2	PSC will be consistent with past Orders
22-Apr-05	Transition & Integration	Project Delivery/Transition	OS015	Loss of key operator	B	1	2	x	KY	M	Open disucssions with employees have taken place. AW HR personnel has provided wage & benefit information and contact information.	KY	A	2	All employees will remain with KAW. Supvr. has operators license.
22-Apr-05	Project Delivery	Project Delivery/Transition	OS016	Legal action by Owenton to force performance relative to January 15, 2004 executed contract	C	2	6	x	BD, KY, Legal	M	New asset purchase agreement to be exectued between the parties rescinding any previosu agreements.	BD, KY, Legal	B	2	Owenton will sign new agreement
							0								
							0								
							0								
							0								
							0								
							0								
							0								

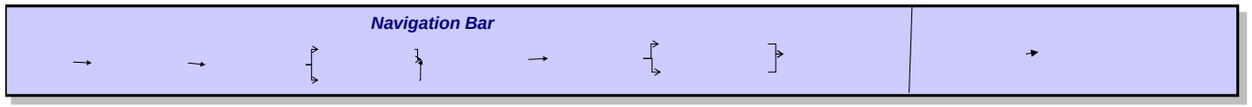

Key Risk List

Risk Register created on: 14-Apr-05

Region/Business Unit ***Southeast Region*** **ky American Water**

Note: To populate key risk form, please place your cursor on the risk number you wish to evaluate.

Date Risk Changed	Subcat.	Business Phase	Risk No.	Risk Description (Cause, Uncertainty, Effect)	Gross loss category	Gross Probability category (1-4)	Severity score	Level of impact (x)	Risk Owner	Risk Control (A,R,M,T)	Risk Control Strategy	Action Owner	Net Loss Category	Net Probability category (1-4)	Assumptions	Timing of Loss Development
14-Apr-05	Consumers	Project Development	OW002	Customers support of KAW's proposal.	C	2	6	x	BD, KY	M	Inform public through supportive board members and external communications effort.	BD, KY	B	1	Board will work cooperatively with KAW & inform the public	C
14-Apr-05	Project Delivery	Project Delivery/Transition	OW004	Closing completed in a timely manner	E	2	10	x	BD, KY, Legal	M	Frequent communication with Owenton Board & PSC	BD, KY, Legal	C	2	Board will work cooperatively with KAW	C
14-Apr-05	Contractual	Operational	OW005	Contract conditions i.e. two year rate moratorium	C	2	4	x	BD, KY	A			B	2	Assets condition and cost experience do not materially change.	F
14-Apr-05	Client management	Project Delivery/Transition	OW006	State of relationships with Owenton officials and employees	C	2	6	x	BD, KY	M	Frequent communication with Owenton Board, City council & employees	BD, KY	B	2	Timely Closing.	C
14-Apr-05	Marketing & Reputation Management	Project Delivery/Transition	OW008	Recent history of hostile media coverage in nearby Lexington, i.e. condemnation issue	B	4	8	x	KY	M	Maintain relationships with Owen County and Owenton officials and local media outlets	KY	B	2	Owen County and Owenton officials will activley support transaction	C
14-Apr-05	Investment management and M&A	Project Development	OW011	Modeling accuracy	B	2	4	x	BD, KY	M	Comnprehensive due diliengence and continual communication with Owenton staff	BD, KY	B	2	Reliance on due diligence investigations	C
14-Apr-05	Regulatory and legal environment	Project Delivery/Transition	OW012	Relationships with KY PSC	D	1	4	x	BD, KY, Legal	M	Well prepared applications and timely responses to data requests.	BD, KY, Legal	C	1	Staff will support filing.	C
14-Apr-05	Social	Project Delivery/Transition	OW013	Pressure from FLOW.	B	3	6	x	KY	M	Maintain good relations with Owenton & Owen County officals. Plan for media & customer comments.	KY	B	1	Owenton officals will continue to acitvley suppor the transaction.	C
14-Apr-05	Treatment & Production	Operational	OW014	Failure to deliver capital improvements according to plan	C	2	6	x	KY	M	Effecitve asset management plan, operations & maintain effective DOW relationships	KY	B	1	DOW's continual support	C
22-Apr-05	Project Delivery	Project Delivery/Transition	OW018	Legal action by Owenton to force performance relative to Jan. 15, 2004 executed agreement.	C	2	6	x	BD, KY, Legal	M	New asset purchase agreement to be executed between the parties rescinding any and all previous agreements.	BD, KY, Legal	B	2	Owenton will sign a new agreement.	C
							0									

KENTUCKY-AMERICAN WATER COMPANY
CASE NO. 2012-00096
COMMISSION STAFF'S FIRST REQUEST FOR INFORMATION

Witness: Keith Cartier / Lance Williams

5. List for the period from January 1, 2006 until December 31, 2011 each instance in which water pressure at any point in the Northern Division fell below the minimum pressure that Commission regulations or Kentucky Division of Water ("KDOW") permit and state the cause of the low pressure.

Response:

The following list identifies each event where water pressure was known or could have fallen below Commission or KDOW regulations. Each event resulted from a water main break and boil water advisories were issued, as appropriate. The date and approximate location of each break are identified below:

2/27/06	Hwy 22 near Hwy 227
4/17/06	Old Monterey Rd
7/17/06	Old Sweet Owen Rd
8/21/06	Greenup Rd
9/12/06	Hwy 127 near Shady Lane
10/24/06	Hwy 22 East between 2570 and 1940 Hwy 22 E
11/14/06	325 Hwy 467
1/30/07	Hwy 127 S south of Monterey
2/3/07	Hwy 127 near Shady Lane
2/6/07	North Adams St between 423 and 309 N Adams St
2/27/07	Hwy 127 near Shady Lane
3/2/07	Old Monterey Rd between 4790 and 550
3/9/07	School Rd between 230 and 210
4/11/07	Hide A Way Hills between Lot 79 and 86
5/10/07	Hwy 22 West between 945 and 422
5/24/07	Squiresville Rd between 855 and 85
6/19/07	Slippery Rock Rd between 1165 and 2515
7/18/07	Ballard Lane near Monterey tank
7/20/07	West Howard St between 108 and 101
7/24/07	Hwy 127 near Shady Lane
8/4/07	Hwy 127 near Shady Lane
8/15/07	Hwy 127 near Shady Lane
9/1/07	Slippery Rock near Georgetown Rd
9/28/07	Swope Rd between 3860 and 4395
10/10/07	West Seminary between 320 and 215
10/23/07	Hwy 127 near Shady Lane
11/28/07	Hwy 467 near Hwy 35
12/17/07	Hwy 127 North near Ameristop
12/17/07	Hwy 607 between 16110 and 15105

KENTUCKY-AMERICAN WATER COMPANY
CASE NO. 2012-00096
COMMISSION STAFF'S FIRST REQUEST FOR INFORMATION

1/8/08	Hwy 22 West near Squiresville Rd
1/10/08	West Perry St between 109 and 153
1/31/08	Hwy 127 N near cemetery
4/15/08	West Seminary between 239 and 167
6/23/08	Roland Ave near hospital
9/9/08	Glencoe between Main St and Noel St
9/11/08	Hwy 127 Glencoe
1/5/09	8665 Hwy 127 South
4/3/09	Hwy 127 south of Monterey
4/4/09	Slippery Rock Rd
4/21/09	Hwy 22E near Hwy 227
4/23/09	New Liberty Rd near fire department
5/7/09	Hwy 127 S Monterey
5/18/09	Ballard Ln and Bridge St
5/18/09	Hwy 227 near Owen Co schools
5/19/09	Elk Lake Resort north side of lake
5/20/09	School Rd near Jonesville
8/2/09	Glencoe near Main St
8/11/09	Glencoe near Main St
8/26/09	Hwy 22 East between 4180 and 5325
9/3/09	Hide A Way Hills near Driftwood Dr
12/28/09	West Adair St between 111 and 104
5/5/10	Hide A Way Hills near Driftwood
6/7/10	Glencoe near East Howard St
6/24/10	Hwy 127 Glencoe
6/24/10	Roland Ave between 106 and 202
8/17/10	Elk Lake Resort north side of lake
8/25/10	Hwy 227 near Slippery Rock
9/2/10	Hwy 227 near bus garage
11/16/10	Monterey near Taylor St
12/6/10	Hwy 227 S near county line
5/13/11	Perry St near Family Billiards
5/22/11	E Howard St between 113 and 116
7/15/11	Perkins St
9/19/11	Elk Lake Resort north side of the lake
9/22/11	Monterey near Taylor St
9/26/11	Hwy 227 near Bus Garage
10/29/11	Hwy 127 S between 7995 and 8420
11/5/11	Hwy 127 near Shady Lane
11/8/11	Hwy 127 near Shady Lane
11/30/11	Elk Lake Resort north side of the lake
12/1/11	Elk Lake Resort near lot 1162
12/1/11	Sunset Ct near Kelly Ct

KENTUCKY-AMERICAN WATER COMPANY
CASE NO. 2012-00096
COMMISSION STAFF'S FIRST REQUEST FOR INFORMATION

12/12/11	Hwy 227 between 1895 and 715
12/16/11	Hwy 22 W near Hide A Way Hills
12/25/11	Hwy 127 near Shady Lane

KENTUCKY-AMERICAN WATER COMPANY
CASE NO. 2012-00096
COMMISSION STAFF'S FIRST REQUEST FOR INFORMATION

Witness: Lance Williams

6. State the maximum daily production of the Owenton Water Treatment Plant and the date upon which that production occurred.

Response:

1,175,910 gallons on 7/23/11

KENTUCKY-AMERICAN WATER COMPANY
CASE NO. 2012-00096
COMMISSION STAFF'S FIRST REQUEST FOR INFORMATION

Witness: Lance Williams

7. Provide a map on which is marked the areas that cannot hydraulically be served from the Owenton Water Treatment Plant. Identify on this map the locations of the master meters through which Kentucky-American purchases water to supply these areas.

Response:

Some areas of the Northern Division are more challenging to reliably serve than others. Consequently, several areas that can be more reliably served through purchased water agreements have been isolated from those areas that remain served by the Owenton Water Treatment Plant. Please refer to the attached map for those areas and master meter locations.

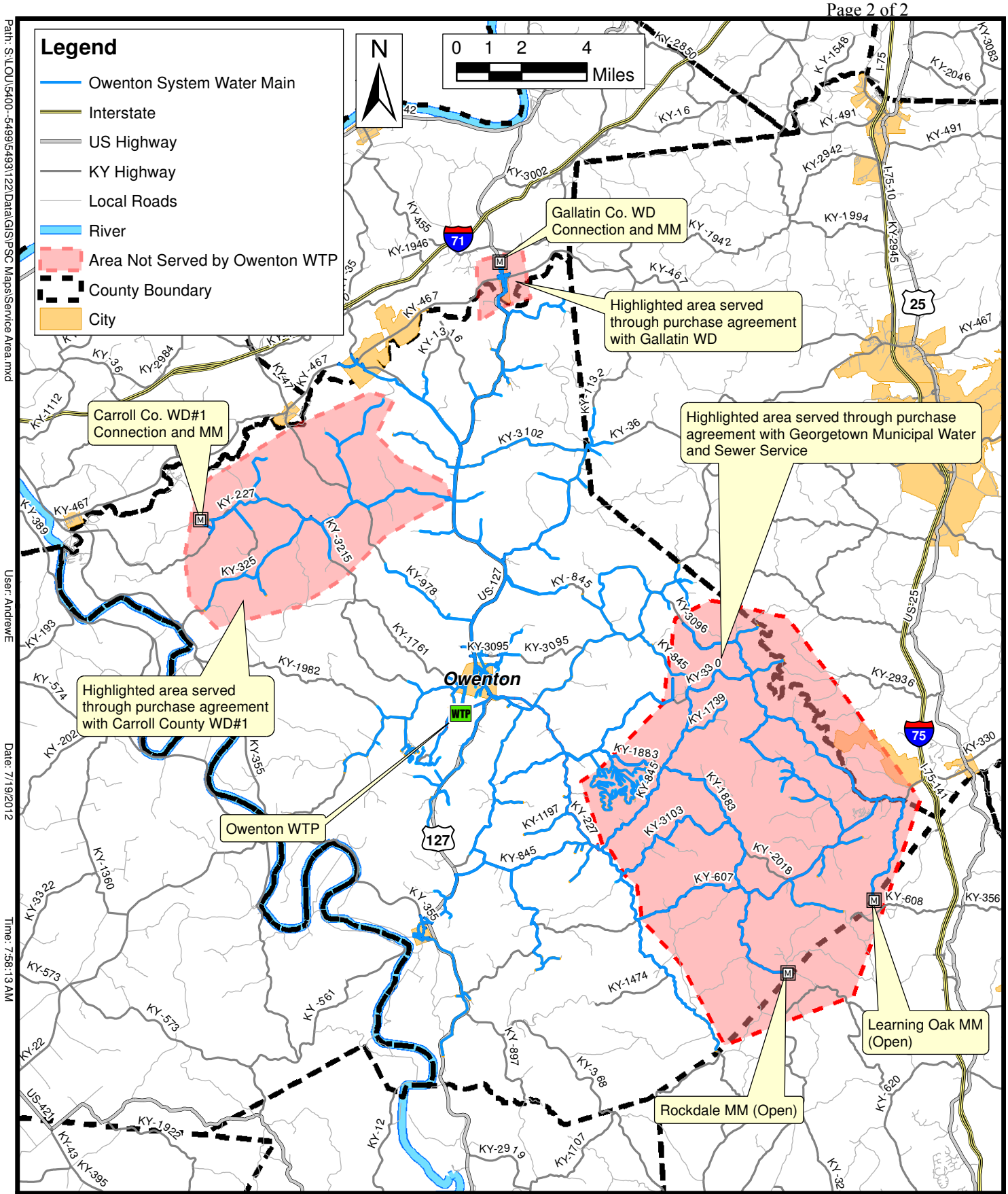

OWENTON WATER TREATMENT PLANT
SERVICE AREA

KENTUCKY AMERICAN WATER
LEXINGTON, KENTUCKY

STRAND ASSOCIATES®

5493.122

KENTUCKY-AMERICAN WATER COMPANY
CASE NO. 2012-00096
COMMISSION STAFF'S FIRST REQUEST FOR INFORMATION

Witness: Lance Williams

8. Provide hydraulic analyses, supported by computations and actual field measurements, of typical operational sequences of the Northern Division's distribution system. These hydraulic analyses should demonstrate the operation of all pump stations and the "empty-fill" cycle of all water storage tanks. Computations are to be documented by a labeled schematic map of the system that shows pipeline sizes, lengths, connections, pumps, water storage tanks, wells, and sea level elevations of key points, as well as allocations of actual customer demands. Flows used in the analyses shall be identified as to whether they are based on average instantaneous flows, peak instantaneous flows, or any combination or variation thereof. The flows used in the analyses shall be documented by actual field measurements and customer use records. Justify fully any assumptions used in the analyses.

Response:

Hydraulic analyses for the Northern Division Connection project were accomplished through modeling the distribution system and proposed infrastructure improvements using KYPipe 2010 (KYPipe) through an Extended Period Simulation (EPS). Modeling the system using KYPipe EPS captures the instantaneous high (peak) and low flow conditions based on customer demands during the course of a 24-hour period.

The model incorporated all infrastructure in the Northern Division system.

- See attached table labeled "Northern Division KYPipe Model Node Information" for the location, elevation, meter route, and additional model information associated with the KYPipe nodes in the Northern Division distribution system.
- See attached figure labeled "Northern Division Model Node Elevations" for the modeled node elevations in the distribution system.
- See attached table labeled "Northern Division KYPipe Model Pipe Information" for the length, connecting node, diameter, and roughness of water mains in the Northern Division distribution system.
- See attached figure labeled "Northern Division Service Area Map" for a map of the Northern Division distribution system, including pump, tank, water main, and other infrastructure locations.

Prior to incorporating the proposed infrastructure, a number of updates were performed on the KYPipe model so that the model accurately represented the distribution system. These updates include, but are not limited to:

- New infrastructure previously not included was incorporated into the model.
- Demand was reallocated in the model based upon customer meter route usage from May 2011.

KENTUCKY-AMERICAN WATER COMPANY
CASE NO. 2012-00096
COMMISSION STAFF'S FIRST REQUEST FOR INFORMATION

- Demand for each meter route was averaged over the course of the month to determine an average demand for each meter route in the KYPipe model. Demand in each meter route was assumed to be distributed equally among all model nodes within the meter route.
- Tank levels and pump operation were used to determine diurnal curves for the Northern Division distribution system. This method captures instantaneous high (peak) and low flow conditions within the distribution system.
- See attached table labeled "Northern Division KYPipe Model Meter Route Information" for information regarding distribution system demand and meter routes allocated in the KYPipe model.
- See attached figure labeled "Northern Division Model Junction Meter Routes" for the location of the meter routes in the Northern Division distribution system.

• After reallocating demand and including new infrastructure, the Northern Division distribution system model was calibrated using hydrant flow test data, SCADA information, and the hydraulic calibration engine of the KYPipe program.
- Not all the infrastructure in the Northern Division distribution system is included in SCADA. For infrastructure that is not included in SCADA, information was gathered from field personnel.
- See attached SCADA printouts of available tank levels during the 24-hour period after the hydrant tests were performed.
- See figure below showing the Owenton Water Treatment Plant flows recorded by SCADA during the 24-hour period after the hydrant tests were performed.

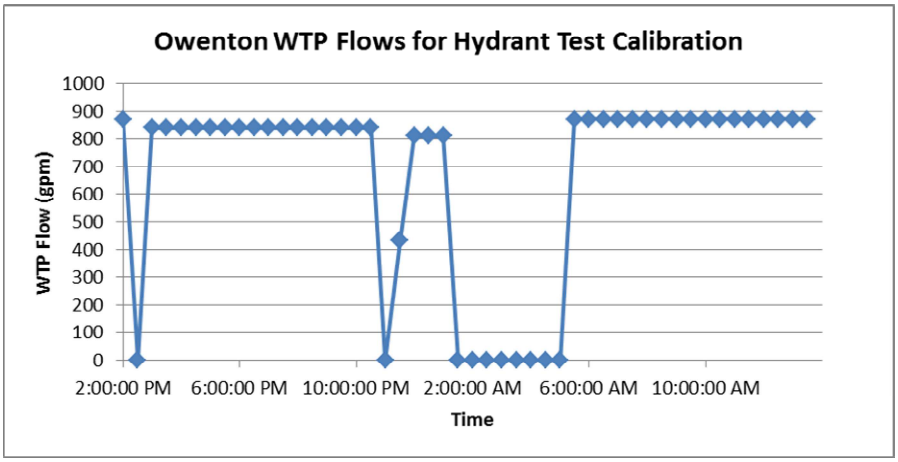

- See attached figure labeled "Northern Division Hydrant Test Locations" for the locations of the hydrant tests.
- See table below for the results of the model calibration based on the hydrant tests.

Hydrant Test No.	Location Description	Field Measured Residual Pressure (psi)	KYPipe Calibrated Residual Pressure (psi)
1	Carter Lane within Owenton	45	43.8
2	Corner of Bryan St. and Madison St.	30	32.7

KENTUCKY-AMERICAN WATER COMPANY
CASE NO. 2012-00096
COMMISSION STAFF'S FIRST REQUEST FOR INFORMATION

	within Owenton		
3	Near intersection of US127 and KY36	8	7.3
4	Intersection of Taylor and Worth within Monterey	50	49.8
5	Near intersection of Fox Trail and Pleasant Grove Road	8	10.9
6	Intersection of KY607 and KY227	16	12.6

After the above items were complete, the proposed infrastructure for the Northern Division Connection project was included in the KYPipe model. The model was them used to simulate an average 24-hour demand day. The following figures show the simulated minimum, average, and high pressure conditions observed by the model during the 24-hour average demand day.

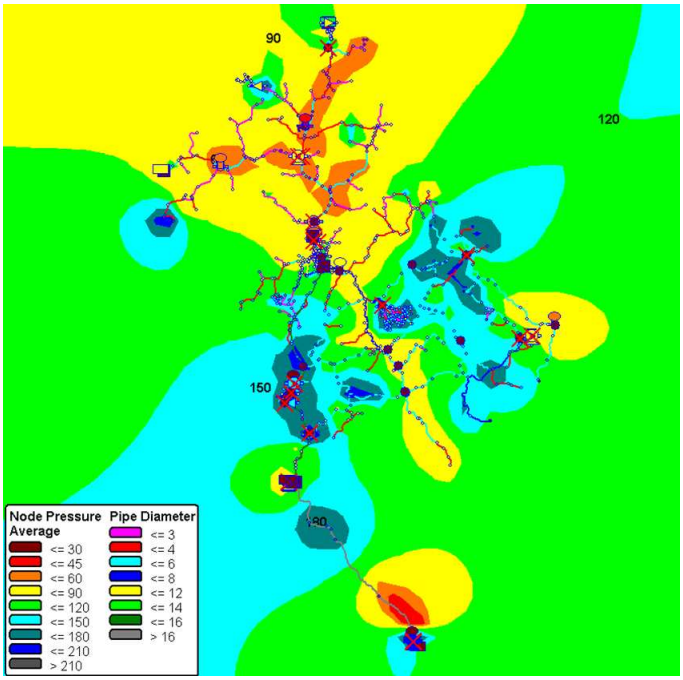

North Division Simulated Average System Pressure

KENTUCKY-AMERICAN WATER COMPANY
CASE NO. 2012-00096
COMMISSION STAFF'S FIRST REQUEST FOR INFORMATION

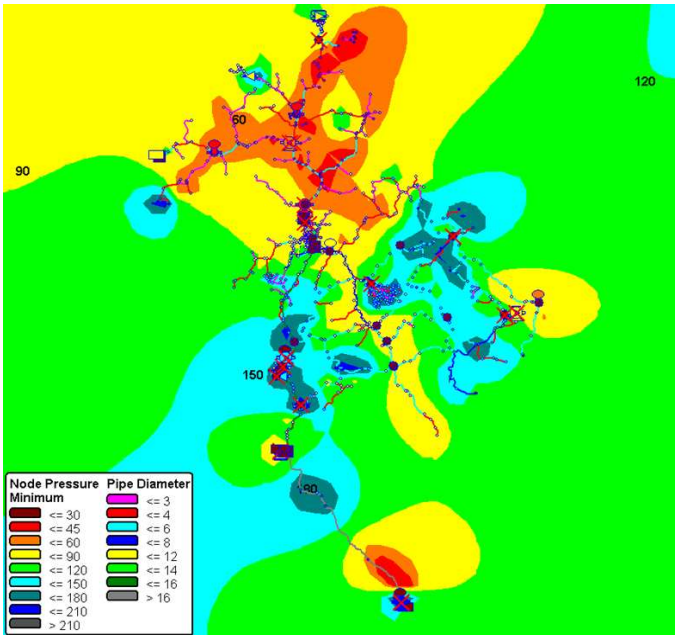

Northern Division Simulated Minimum System Pressures

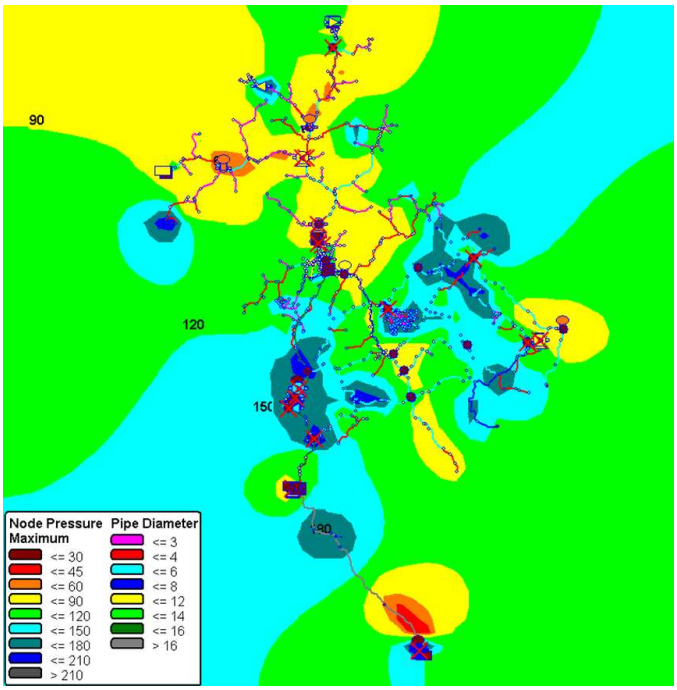

Northern Division Simulated Maximum System Pressures

Northern Division KYPipe Model Node Information

Name	~X	~Y	Elv.	Item1	Item2	Item3	Item4	Item5	~Type	Meter Route
CENTRAL SYSTEM	5211263.1	3972128.2	879	3655.40	8	0.0	0.0	0.0	1	
EL Junction	5203676.0	4058941.0	933	0.31	6	0.0	0.0	0.0	1	141440
J-1	5225051.0	4056501.7	870	0.31	6	0.0	0.0	0.0	1	141440
J-10	5204092.5	4051458.3	940	0.32	5	0.0	0.0	0.0	1	141440
J-100	5185626.0	4135901.8	880	0.76	1	0.2	0.0	0.2	1	40440
J-1000	5211872.5	4070068.3	877	0.31	6	0.0	0.0	0.0	1	141440
J-1001	5226246.0	4038531.8	773	0.66	6	0.0	0.0	0.0	1	212141
J-1002	5225695.0	4049729.5	885	0.66	6	0.0	0.0	0.0	1	212141
J-1003	5232029.5	4051857.5	720	0.19	6	0.0	0.0	0.0	1	202041
J-1004	5227095.5	4092919.5	672	0.27	6	0.0	0.0	0.0	1	191941
J-1005	5224458.0	4074480.5	686	0.19	6	0.0	0.0	0.0	1	202041
J-1006	5231283.0	4087351.8	700	0.27	6	0.0	0.0	0.0	1	191941
J-1007	5223625.5	4090440.5	882	0.27	6	0.0	0.0	0.0	1	191941
J-1008	5214998.0	4093280.8	690	0.27	6	0.0	0.0	0.0	1	191941
J-101	5204451.5	4102278.3	887	0.42	5	0.0	0.0	0.0	1	131340
J-1010	5247030.0	4064938.8	952	0.19	6	0.0	0.0	0.0	1	202041
J-1011	5246508.0	4064900.5	941	0.19	6	0.0	0.0	0.0	1	202041
J-1012	5242667.5	4066448.5	960	0.19	6	0.0	0.0	0.0	1	202041
J-1013	5233545.0	4076299.8	880	0.27	6	0.0	0.0	0.0	1	191941
J-1014	5228606.5	4078301.8	889	0.27	6	0.0	0.0	0.0	1	191941
J-1015	5226050.5	4084829.3	882	0.27	6	0.0	0.0	0.0	1	191941
J-1016	5219074.0	4082854.0	734	0.27	6	0.0	0.0	0.0	1	191941
J-1017	5217372.5	4082392.5	734	0.27	6	0.0	0.0	0.0	1	191941
J-1018	5240754.0	4059340.0	800	0.19	6	0.0	0.0	0.0	1	202041
J-1019	5240122.5	4057706.5	893	0.19	6	0.0	0.0	0.0	1	202041
J-102	5196294.0	4057991.0	905	0.45	5	0.0	0.0	0.0	1	151540
J-1020	5238436.0	4057194.0	890	0.19	6	0.0	0.0	0.0	1	202041
J-1022	5237446.0	4056134.0	869	0.19	6	0.0	0.0	0.0	1	202041
J-1023	5232910.5	4052083.3	720	0.19	6	0.0	0.0	0.0	1	202041
J-1024	5214214.0	4073827.5	855	0.27	6	0.0	0.0	0.0	1	191941
J-1025	5215560.0	4076063.3	879	0.27	6	0.0	0.0	0.0	1	191941
J-1026	5215936.5	4082886.3	700	0.27	6	0.0	0.0	0.0	1	191941
J-1027	5250644.5	4064364.8	980	0.19	6	0.0	0.0	0.0	1	202041
J-1028	5221752.5	4081178.3	680	0.27	6	0.0	0.0	0.0	1	191941
J-1029	5224258.0	4084254.0	680	0.27	6	0.0	0.0	0.0	1	191941
J-103	5194178.0	4056043.0	900	0.45	5	0.0	0.0	0.0	1	151540
J-1030	5238279.5	4047275.0	840	0.66	6	0.0	0.0	0.0	1	212141
J-1031	5240958.5	4046730.0	820	0.66	6	0.0	0.0	0.0	1	212141
J-1032	5238904.0	4064642.5	939	0.19	6	0.0	0.0	0.0	1	202041
J-1033	5229576.5	4071031.5	865	0.19	6	0.0	0.0	0.0	1	202041
J-1034	5226278.0	4073653.5	700	0.19	6	0.0	0.0	0.0	1	202041
J-104	5177396.5	4046182.5	870	0.24	5	0.0	0.0	0.0	1	171739
J-1046	5175207.5	4019556.3	745.5	0.00	1	0.0	0.0	0.0	1	
J-105	5174657.0	4049984.3	880	0.24	5	0.0	0.0	0.0	1	171739
J-106	5174606.0	4045386.8	870	0.24	5	0.0	0.0	0.0	1	171739
J-107	5172815.0	4129391.0	857	0.33	1	0.0	0.0	0.0	1	60640
J-108	5185734.5	4134271.8	879	0.76	1	0.2	0.0	0.2	1	40440
J-109	5178754.0	4122199.0	914	0.33	1	0.0	0.0	0.0	1	60640
J-11	5222238.5	4061049.0	850	0.31	6	0.0	0.0	0.0	1	141440
J-110	5172945.5	4133962.0	800	0.33	1	0.0	0.0	0.0	1	60640
J-111	5186661.0	4142958.8	879	0.76	1	0.2	0.0	0.2	1	40440
J-112	5186194.0	4146853.0	540	0.32	3	0.0	0.0	0.0	1	50540
J-113	5196410.0	4146800.0	885	0.76	1	0.2	0.0	0.2	1	40440
J-114	5185825.5	4144049.5	755	0.76	1	0.2	0.0	0.2	1	40440
J-115	5185673.5	4133879.5	895	0.76	1	0.2	0.0	0.2	1	40440
J-116	5188371.0	4134816.8	880	0.76	1	0.2	0.0	0.2	1	40440
J-117	5186882.5	4132046.8	885	0.76	1	0.2	0.0	0.2	1	40440
J-118	5181507.5	4129566.8	895	0.76	1	0.2	0.0	0.2	1	40440
J-119	5184033.0	4130495.8	880	0.76	1	0.2	0.0	0.2	1	40440
J-12	5200496.0	4057302.3	933	0.32	5	0.0	0.0	0.0	1	141440
J-120	5180442.0	4132063.5	860	0.76	1	0.2	0.0	0.2	1	40440
J-121	5178552.5	4118580.0	910	0.43	1	0.0	0.0	0.0	1	111140
J-122	5185570.0	4130061.0	890	0.76	1	0.2	0.0	0.2	1	40440
J-123	5177831.5	4113186.3	903	0.43	1	0.0	0.0	0.0	1	111140
J-124	5189191.0	4122984.8	867	0.43	1	0.0	0.0	0.0	1	111140
J-125	5168039.0	4123758.0	840	0.43	1	0.0	0.0	0.0	1	111140

Northern Division KYPipe Model Node Information

Name	~X	~Y	Elv.	Item1	Item2	Item3	Item4	Item5	~Type	Meter Route
J-126	5182538.5	4114460.8	900	0.43	1	0.0	0.0	0.0	1	111140
J-127	5161486.5	4112809.3	894	0.41	4	0.0	0.0	0.0	1	80840
J-128	5166428.5	4129524.8	700	0.63	4	0.0	0.0	0.0	1	90940
J-129	5138831.5	4109946.3	890	0.63	4	0.0	0.0	0.0	1	90940
J-13	5196654.5	4051550.5	840	0.32	5	0.0	0.0	0.0	1	141440
J-130	5156430.5	4109336.0	901	0.41	4	0.0	0.0	0.0	1	80840
J-131	5157769.0	4103774.0	860	0.41	4	0.0	0.0	0.0	1	80840
J-132	5138650.0	4110052.5	890	0.63	4	0.0	0.0	0.0	1	90940
J-133	5142227.0	4112043.8	880	0.63	4	0.0	0.0	0.0	1	90940
J-134	5178985.5	4078901.5	980	0.27	2	0.0	0.0	0.0	1	41200
J-135	5145101.0	4108570.0	838	0.63	4	0.0	0.0	0.0	1	90940
J-136	5153636.0	4110178.8	914	0.41	4	0.0	0.0	0.0	1	80840
J-137	5143647.5	4101000.0	867	0.41	4	0.0	0.0	0.0	1	80840
J-138	5137568.5	4095442.8	560	0.41	4	0.0	0.0	0.0	1	80840
J-139	5144443.0	4102117.8	860	0.41	4	0.0	0.0	0.0	1	80840
J-14	5199832.0	4057880.0	944	0.32	5	0.0	0.0	0.0	1	141440
J-140	5146045.0	4101670.8	880	0.41	4	0.0	0.0	0.0	1	80840
J-141	5178137.0	4108463.3	930	0.43	1	0.0	0.0	0.0	1	111140
J-142	5147446.5	4097832.8	861	0.41	4	0.0	0.0	0.0	1	80840
J-143	5181026.0	4093760.3	966	0.54	1	0.0	0.0	0.0	1	101040
J-144	5172354.0	4108211.3	880	0.43	1	0.0	0.0	0.0	1	111140
J-145	5166768.5	4102922.5	865	0.54	1	0.0	0.0	0.0	1	101040
J-146	5173074.5	4098020.8	884	0.54	1	0.0	0.0	0.0	1	101040
J-147	5180844.0	4090082.3	960	0.27	2	0.0	0.0	0.0	1	41200
J-148	5170443.0	4083910.5	905	0.27	2	0.0	0.0	0.0	1	41200
J-149	5179126.0	4089505.0	940	0.27	2	0.0	0.0	0.0	1	41200
J-15	5191143.5	4037243.8	910	0.24	5	0.0	0.0	0.0	1	171739
J-150	5186268.0	4100998.3	953	0.54	1	0.0	0.0	0.0	1	101040
J-151	5196240.5	4099364.0	900	0.54	1	0.0	0.0	0.0	1	101040
J-152	5186082.0	4102752.5	940	0.54	1	0.0	0.0	0.0	1	101040
J-153	5185687.0	4103254.3	945	0.43	1	0.0	0.0	0.0	1	111140
J-154	5160194.5	4118451.3	870	0.63	4	0.0	0.0	0.0	1	90940
J-155	5199253.0	4121302.0	925	0.59	1	0.0	0.0	0.0	1	171740
J-156	5216434.5	4099835.8	845	0.42	5	0.0	0.0	0.0	1	131340
J-157	5192089.5	4122200.8	720	0.59	1	0.0	0.0	0.0	1	171740
J-158	5196502.0	4115884.8	914	0.59	1	0.0	0.0	0.0	1	171740
J-159	5191208.0	4106240.8	945	0.59	1	0.0	0.0	0.0	1	171740
J-16	5192387.0	4038198.0	901	0.24	5	0.0	0.0	0.0	1	171739
J-160	5191599.0	4117537.5	750	0.59	1	0.0	0.0	0.0	1	171740
J-161	5146407.5	4113208.3	893	0.63	4	0.0	0.0	0.0	1	90940
J-162	5194875.5	4103743.8	880	0.59	1	0.0	0.0	0.0	1	171740
J-163	5147550.0	4119971.3	820	0.63	4	0.0	0.0	0.0	1	90940
J-164	5154589.5	4110212.5	910	0.41	4	0.0	0.0	0.0	1	80840
J-165	5186132.0	4104492.8	940	0.59	1	0.0	0.0	0.0	1	171740
J-166	5178371.5	4118510.5	910	0.43	1	0.0	0.0	0.0	1	111140
J-167	5178950.0	4121857.5	910	0.43	1	0.0	0.0	0.0	1	111140
J-168	5179017.0	4121863.3	910	0.43	1	0.0	0.0	0.0	1	111140
J-169	5138295.0	4107739.5	878	0.63	4	0.0	0.0	0.0	1	90940
J-17	5195036.0	4039128.8	900	0.24	5	0.0	0.0	0.0	1	171739
J-170	5178845.0	4122101.5	910	0.33	1	0.0	0.0	0.0	1	60640
J-171	5178809.0	4122167.3	910	0.33	1	0.0	0.0	0.0	1	60640
J-172	5192235.5	4107919.0	940	0.59	1	0.0	0.0	0.0	1	171740
J-173	5152238.5	4111579.8	885	0.63	4	0.0	0.0	0.0	1	90940
J-174	5162891.0	4112687.0	880	0.41	4	0.0	0.0	0.0	1	80840
J-175	5170948.0	4130522.3	810	0.33	1	0.0	0.0	0.0	1	60640
J-176	5177890.0	4080650.3	920	0.27	2	0.0	0.0	0.0	1	41200
J-177	5195750.0	4145479.3	880	0.76	1	0.2	0.0	0.2	1	40440
J-178	5163395.5	4134253.0	490	0.33	1	0.0	0.0	0.0	1	60640
J-179	5163272.5	4134653.3	503	0.33	1	0.0	0.0	0.0	1	60640
J-18	5196214.0	4062865.5	935	0.32	5	0.0	0.0	0.0	1	141440
J-180	5166146.5	4132882.8	560	0.33	1	0.0	0.0	0.0	1	60640
J-181	5162973.0	4135254.0	510	0.33	1	0.0	0.0	0.0	1	60640
J-182	5180786.0	4124814.0	907	0.76	1	0.2	0.0	0.2	1	40440
J-183	5192092.0	4135033.5	825	0.76	1	0.2	0.0	0.2	1	40440
J-184	5185948.0	4147681.5	540	0.32	3	0.0	0.0	0.0	1	50540
J-185	5186128.0	4147441.3	540	0.32	3	0.0	0.0	0.0	1	50540

Northern Division KYPipe Model Node Information

Name	~X	~Y	Elv.	Item1	Item2	Item3	Item4	Item5	~Type	Meter Route
J-186	5185792.5	4148880.3	540	0.32	3	0.0	0.0	0.0	1	50540
J-187	5185054.5	4149485.8	540	0.32	3	0.0	0.0	0.0	1	50540
J-188	5185740.5	4149214.0	540	0.32	3	0.0	0.0	0.0	1	50540
J-189	5185706.0	4149566.0	540	0.32	3	0.0	0.0	0.0	1	50540
J-19	5195866.5	4072354.5	941	0.32	5	0.0	0.0	0.0	1	141440
J-190	5185727.5	4149379.5	540	0.32	3	0.0	0.0	0.0	1	50540
J-191	5186609.0	4149450.8	560	0.32	3	0.0	0.0	0.0	1	50540
J-192	5191166.0	4142615.5	865	0.76	1	0.2	0.0	0.2	1	40440
J-193	5192627.5	4144932.5	870	0.76	1	0.2	0.0	0.2	1	40440
J-194	5162049.0	4135534.8	520	0.33	1	0.0	0.0	0.0	1	60640
J-195	5161250.5	4136790.3	540	0.33	1	0.0	0.0	0.0	1	60640
J-196	5161972.0	4135387.0	510	0.33	1	0.0	0.0	0.0	1	60640
J-197	5159298.0	4135191.0	520	0.33	1	0.0	0.0	0.0	1	60640
J-198	5180480.5	4118707.5	905	0.43	1	0.0	0.0	0.0	1	111140
J-199	5159245.5	4122014.0	860	0.63	4	0.0	0.0	0.0	1	90940
J-2	5224307.5	4050757.0	876	0.31	6	0.0	0.0	0.0	1	141440
J-20	5189265.0	4059131.5	908	0.32	5	0.0	0.0	0.0	1	141440
J-200	5183616.0	4104601.0	935	0.43	1	0.0	0.0	0.0	1	111140
J-2000	5201962.5	4056605.0	931	0.32	5	0.0	0.0	0.0	1	141440
J-2001	5204349.0	4060068.5	935	0.31	6	0.0	0.0	0.0	1	141440
J-201	5157115.5	4124027.5	870	0.63	4	0.0	0.0	0.0	1	90940
J-202	5179971.5	4106971.5	940	0.43	1	0.0	0.0	0.0	1	111140
J-203	5181626.0	4106447.0	946	0.43	1	0.0	0.0	0.0	1	111140
J-204	5182312.5	4107635.3	890	0.43	1	0.0	0.0	0.0	1	111140
J-205	5182279.0	4110139.0	910	0.43	1	0.0	0.0	0.0	1	111140
J-206	5196401.5	4114644.3	912	0.59	1	0.0	0.0	0.0	1	171740
J-207	5199489.5	4121911.0	915	0.59	1	0.0	0.0	0.0	1	171740
J-208	5200237.5	4122108.3	905	0.59	1	0.0	0.0	0.0	1	171740
J-209	5197831.0	4116956.8	902	0.59	1	0.0	0.0	0.0	1	171740
J-21	5185577.0	4067519.8	808	0.45	5	0.0	0.0	0.0	1	151540
J-210	5200595.0	4128061.8	885	0.59	1	0.0	0.0	0.0	1	171740
J-211	5201654.5	4120541.8	910	0.59	1	0.0	0.0	0.0	1	171740
J-212	5199316.5	4115330.5	870	0.59	1	0.0	0.0	0.0	1	171740
J-213	5191549.0	4097999.8	930	0.54	1	0.0	0.0	0.0	1	101040
J-214	5180513.5	4089426.0	960	0.27	2	0.0	0.0	0.0	1	41200
J-215	5182831.0	4086144.0	945	0.48	2	0.0	0.0	0.0	1	41100
J-216	5185073.5	4086840.8	960	0.27	2	0.0	0.0	0.0	1	41200
J-217	5183351.5	4084222.8	965	0.48	2	0.0	0.0	0.0	1	41100
J-218	5184642.5	4086557.0	960	0.27	2	0.0	0.0	0.0	1	41200
J-219	5181235.5	4088048.0	974	0.27	2	0.0	0.0	0.0	1	41200
J-22	5201589.5	4069777.5	880	0.13	6	0.0	0.0	0.0	1	181840
J-220	5184838.0	4086219.3	960	0.27	2	0.0	0.0	0.0	1	41200
J-221	5180449.5	4087998.5	940	0.27	2	0.0	0.0	0.0	1	41200
J-222	5182740.5	4085305.5	985	0.48	2	0.0	0.0	0.0	1	41100
J-223	5181519.5	4086369.8	906	0.48	2	0.0	0.0	0.0	1	41100
J-224	5182721.5	4084858.3	980	0.48	2	0.0	0.0	0.0	1	41100
J-225	5182693.5	4084501.3	990	0.48	2	0.0	0.0	0.0	1	41100
J-226	5182931.5	4083229.0	970	0.48	2	0.0	0.0	0.0	1	41100
J-227	5184742.5	4084897.0	970	0.27	2	0.0	0.0	0.0	1	41200
J-228	5181432.5	4086522.8	965	0.48	2	0.0	0.0	0.0	1	41100
J-229	5181358.5	4086511.0	965	0.48	2	0.0	0.0	0.0	1	41100
J-23	5212592.5	4096819.8	850	0.42	5	0.0	0.0	0.0	1	131340
J-230	5181259.5	4086743.3	960	0.48	2	0.0	0.0	0.0	1	41100
J-231	5181087.5	4084715.3	980	0.48	2	0.0	0.0	0.0	1	41100
J-232	5181178.5	4085436.5	985	0.48	2	0.0	0.0	0.0	1	41100
J-233	5181581.0	4085374.8	965	0.48	2	0.0	0.0	0.0	1	41100
J-234	5181031.0	4084313.8	965	0.48	2	0.0	0.0	0.0	1	41100
J-235	5180432.0	4084384.8	980	0.48	2	0.0	0.0	0.0	1	41100
J-236	5182654.5	4084131.5	990	0.48	2	0.0	0.0	0.0	1	41100
J-237	5184633.5	4084606.3	975	0.27	2	0.0	0.0	0.0	1	41200
J-238	5181526.5	4084986.3	930	0.48	2	0.0	0.0	0.0	1	41100
J-239	5182153.5	4085279.0	980	0.48	2	0.0	0.0	0.0	1	41100
J-24	5187251.5	4053334.3	860	0.45	5	0.0	0.0	0.0	1	151540
J-240	5182200.5	4084556.8	990	0.48	2	0.0	0.0	0.0	1	41100
J-241	5181929.5	4084188.5	965	0.48	2	0.0	0.0	0.0	1	41100
J-242	5182454.5	4084531.0	980	0.48	2	0.0	0.0	0.0	1	41100

Northern Division KYPipe Model Node Information

Name	~X	~Y	Elv.	Item1	Item2	Item3	Item4	Item5	~Type	Meter Route
J-243	5182434.0	4084306.0	960	0.48	2	0.0	0.0	0.0	1	41100
J-244	5183607.5	4084436.3	985	0.48	2	0.0	0.0	0.0	1	41100
J-245	5181376.5	4081358.8	925	0.48	2	0.0	0.0	0.0	1	41100
J-246	5182252.5	4082526.0	960	0.48	2	0.0	0.0	0.0	1	41100
J-247	5181828.0	4082373.5	930	0.48	2	0.0	0.0	0.0	1	41100
J-248	5182089.5	4081632.0	945	0.48	2	0.0	0.0	0.0	1	41100
J-249	5182172.5	4084159.8	970	0.48	2	0.0	0.0	0.0	1	41100
J-25	5184018.0	4081696.8	953	0.27	2	0.0	0.0	0.0	1	41200
J-250	5182668.0	4085532.5	965	0.48	2	0.0	0.0	0.0	1	41100
J-251	5183227.0	4083779.3	980	0.48	2	0.0	0.0	0.0	1	41100
J-252	5183586.5	4083942.5	975	0.48	2	0.0	0.0	0.0	1	41100
J-253	5182894.5	4085542.3	965	0.48	2	0.0	0.0	0.0	1	41100
J-254	5185149.0	4086757.3	970	0.27	2	0.0	0.0	0.0	1	41200
J-255	5184966.5	4086317.3	978	0.27	2	0.0	0.0	0.0	1	41200
J-256	5185699.0	4084363.3	965	0.27	2	0.0	0.0	0.0	1	41200
J-257	5185113.0	4085917.5	982	0.27	2	0.0	0.0	0.0	1	41200
J-258	5185926.0	4084323.8	960	0.27	2	0.0	0.0	0.0	1	41200
J-259	5183378.0	4084631.8	960	0.48	2	0.0	0.0	0.0	1	41100
J-26	5181734.0	4058975.5	730	0.45	5	0.0	0.0	0.0	1	151540
J-260	5184560.0	4084524.0	980	0.27	2	0.0	0.0	0.0	1	41200
J-261	5184385.0	4084348.3	970	0.27	2	0.0	0.0	0.0	1	41200
J-262	5182612.0	4083748.0	980	0.48	2	0.0	0.0	0.0	1	41100
J-263	5182145.0	4083779.3	970	0.48	2	0.0	0.0	0.0	1	41100
J-264	5182359.5	4083766.3	980	0.48	2	0.0	0.0	0.0	1	41100
J-265	5181918.5	4083813.8	950	0.48	2	0.0	0.0	0.0	1	41100
J-266	5182108.5	4083356.8	950	0.48	2	0.0	0.0	0.0	1	41100
J-267	5182129.0	4083539.8	960	0.48	2	0.0	0.0	0.0	1	41100
J-268	5182348.5	4083593.5	960	0.48	2	0.0	0.0	0.0	1	41100
J-269	5183313.5	4085467.3	981	8.09	2	0.0	0.0	0.0	1	41100
J-27	5181017.5	4056825.3	875	0.45	5	0.0	0.0	0.0	1	151540
J-270	5184070.5	4083894.5	965	0.48	2	0.0	0.0	0.0	1	41100
J-271	5184082.0	4084179.5	970	0.48	2	0.0	0.0	0.0	1	41100
J-272	5184075.0	4083717.3	970	0.48	2	0.0	0.0	0.0	1	41100
J-273	5183953.5	4081645.5	953	0.27	2	0.0	0.0	0.0	1	41200
J-274	5182872.0	4083201.8	990	0.48	2	0.0	0.0	0.0	1	41100
J-275	5183883.0	4081580.5	953	0.27	2	0.0	0.0	0.0	1	41200
J-276	5183657.5	4081965.8	945	0.27	2	0.0	0.0	0.0	1	41200
J-277	5183434.0	4081850.3	950	0.27	2	0.0	0.0	0.0	1	41200
J-278	5182722.0	4079542.3	910	0.27	2	0.0	0.0	0.0	1	41200
J-279	5181508.0	4084248.3	965	0.48	2	0.0	0.0	0.0	1	41100
J-28	5173554.5	4042501.5	487	0.24	7	0.0	0.0	0.0	1	171739
J-280	5166801.5	4132737.3	611	0.33	1	0.0	0.0	0.0	1	60640
J-281	5181436.0	4083933.5	965	0.48	2	0.0	0.0	0.0	1	41100
J-282	5181394.0	4082943.5	945	0.48	2	0.0	0.0	0.0	1	41100
J-283	5180905.0	4083601.0	955	0.48	2	0.0	0.0	0.0	1	41100
J-284	5179663.0	4082805.5	920	0.27	2	0.0	0.0	0.0	1	41200
J-285	5179092.0	4079028.8	980	0.27	2	0.0	0.0	0.0	1	41200
J-286	5180097.0	4083936.0	960	0.48	2	0.0	0.0	0.0	1	41100
J-287	5183157.0	4080727.0	940	0.27	2	0.0	0.0	0.0	1	41200
J-288	5175532.0	4075151.8	891	0.27	2	0.0	0.0	0.0	1	41200
J-289	5179680.5	4082881.5	940	0.27	2	0.0	0.0	0.0	1	41200
J-29	5174243.0	4042278.3	505	0.24	7	0.0	0.0	0.0	1	171739
J-290	5178996.0	4079123.5	980	0.27	2	0.0	0.0	0.0	1	41200
J-291	5177119.0	4079691.8	950	0.27	2	0.0	0.0	0.0	1	41200
J-292	5177535.0	4079698.5	913	0.27	2	0.0	0.0	0.0	1	41200
J-293	5180063.0	4083859.8	960	0.48	2	0.0	0.0	0.0	1	41100
J-294	5178837.5	4083103.8	920	0.27	2	0.0	0.0	0.0	1	41200
J-295	5181144.0	4083953.5	965	0.48	2	0.0	0.0	0.0	1	41100
J-296	5176851.5	4084610.8	925	0.27	2	0.0	0.0	0.0	1	41200
J-297	5189059.5	4079560.5	958	0.62	5	0.0	0.0	0.0	1	121240
J-298	5191816.5	4079622.3	960	0.32	5	0.0	0.0	0.0	1	141440
J-299	5201299.0	4056719.5	940	0.00	5	0.0	0.0	0.0	1	141440
J-3	5236829.5	4052408.0	860	0.19	6	0.0	0.0	0.0	1	202041
J-30	5172250.0	4042431.3	490	0.24	7	0.0	0.0	0.0	1	171739
J-300	5198790.5	4057616.5	965	0.45	5	0.0	0.0	0.0	1	151540
J-301	5213506.5	4057361.8	900	0.31	6	0.0	0.0	0.0	1	141440

Northern Division KYPipe Model Node Information

Name	~X	~Y	Elv.	Item1	Item2	Item3	Item4	Item5	~Type	Meter Route
J-302	5198190.0	4057685.5	965	0.45	5	0.0	0.0	0.0	1	151540
J-303	5198511.5	4056528.8	900	0.45	5	0.0	0.0	0.0	1	151540
J-304	5182611.5	4054454.0	860	0.45	5	0.0	0.0	0.0	1	151540
J-305	5197495.5	4056192.5	920	0.45	5	0.0	0.0	0.0	1	151540
J-306	5180475.0	4056051.0	870	0.45	5	0.0	0.0	0.0	1	151540
J-307	5182631.0	4083919.3	975	0.48	2	0.0	0.0	0.0	1	41100
J-308	5177168.5	4045655.5	870	0.24	5	0.0	0.0	0.0	1	171739
J-309	5179252.0	4033308.3	567	0.24	5	0.0	0.0	0.0	1	171739
J-31	5174734.5	4042185.5	539	0.24	5	0.0	0.0	0.0	1	171739
J-310	5179302.0	4033138.8	567	0.24	5	0.0	0.0	0.0	1	171739
J-311	5178202.5	4033075.0	620	0.24	5	0.0	0.0	0.0	1	171739
J-312	5179663.5	4033635.8	545	0.24	5	0.0	0.0	0.0	1	171739
J-313	5180485.0	4032451.0	550	0.24	5	0.0	0.0	0.0	1	171739
J-314	5172779.0	4042705.5	490	0.24	7	0.0	0.0	0.0	1	171739
J-315	5175793.5	4025146.0	670	0.24	5	0.0	0.0	0.0	1	171739
J-316	5172510.0	4042930.3	510	0.24	7	0.0	0.0	0.0	1	171739
J-317	5172572.5	4042551.3	480	0.24	7	0.0	0.0	0.0	1	171739
J-318	5173001.0	4042555.5	490	0.24	7	0.0	0.0	0.0	1	171739
J-319	5171965.0	4042978.0	490	0.24	7	0.0	0.0	0.0	1	171739
J-32	5179782.5	4032113.5	567	0.24	5	0.0	0.0	0.0	1	171739
J-320	5173832.5	4042528.3	500	0.24	7	0.0	0.0	0.0	1	171739
J-321	5172904.0	4044992.8	575	0.24	5	0.0	0.0	0.0	1	171739
J-322	5173045.0	4042517.8	490	0.24	7	0.0	0.0	0.0	1	171739
J-323	5172883.0	4044259.0	600	0.24	5	0.0	0.0	0.0	1	171739
J-324	5172402.5	4046070.8	550	0.24	5	0.0	0.0	0.0	1	171739
J-325	5172190.0	4043284.5	500	0.24	7	0.0	0.0	0.0	1	171739
J-326	5174149.0	4044971.3	720	0.24	5	0.0	0.0	0.0	1	171739
J-327	5173060.0	4045709.5	580	0.24	5	0.0	0.0	0.0	1	171739
J-328	5187358.5	4088239.0	965	0.27	2	0.0	0.0	0.0	1	41200
J-329	5174949.0	4059242.0	820	0.27	2	0.0	0.0	0.0	1	41200
J-33	5190736.5	4040199.5	906	0.24	5	0.0	0.0	0.0	1	171739
J-330	5184494.0	4064792.3	895	0.45	5	0.0	0.0	0.0	1	151540
J-331	5179178.0	4073157.0	905	0.27	2	0.0	0.0	0.0	1	41200
J-332	5175681.5	4067057.5	898	0.27	2	0.0	0.0	0.0	1	41200
J-333	5175634.5	4071626.5	855	0.27	2	0.0	0.0	0.0	1	41200
J-334	5173963.0	4070737.0	780	0.27	2	0.0	0.0	0.0	1	41200
J-335	5178166.5	4082605.0	943	0.27	2	0.0	0.0	0.0	1	41200
J-336	5172909.5	4073219.0	860	0.27	2	0.0	0.0	0.0	1	41200
J-337	5174013.0	4082377.8	910	0.27	2	0.0	0.0	0.0	1	41200
J-338	5170868.0	4071983.3	850	0.27	2	0.0	0.0	0.0	1	41200
J-339	5170966.0	4071766.5	850	0.27	2	0.0	0.0	0.0	1	41200
J-34	5220395.0	4024193.0	940	0.32	5	0.0	0.0	0.0	1	141440
J-340	5170868.0	4072608.5	865	0.27	2	0.0	0.0	0.0	1	41200
J-341	5170323.0	4071611.0	800	0.27	2	0.0	0.0	0.0	1	41200
J-342	5171619.0	4072383.8	825	0.27	2	0.0	0.0	0.0	1	41200
J-343	5170710.0	4073005.5	865	0.27	2	0.0	0.0	0.0	1	41200
J-344	5169933.0	4072064.8	805	0.27	2	0.0	0.0	0.0	1	41200
J-345	5170206.0	4073515.3	860	0.27	2	0.0	0.0	0.0	1	41200
J-346	5169344.0	4072673.8	820	0.27	2	0.0	0.0	0.0	1	41200
J-347	5170802.5	4072907.0	865	0.27	2	0.0	0.0	0.0	1	41200
J-348	5172161.0	4072412.3	760	0.27	2	0.0	0.0	0.0	1	41200
J-349	5169221.5	4078074.3	910	0.27	2	0.0	0.0	0.0	1	41200
J-35	5203342.5	4055193.5	950	0.32	5	0.0	0.0	0.0	1	141440
J-350	5170865.0	4073336.0	840	0.27	2	0.0	0.0	0.0	1	41200
J-351	5160323.5	4071020.3	860	0.27	2	0.0	0.0	0.0	1	41200
J-352	5170068.5	4077988.8	900	0.27	2	0.0	0.0	0.0	1	41200
J-353	5160198.5	4069252.3	870	0.27	2	0.0	0.0	0.0	1	41200
J-354	5160146.0	4071143.8	880	0.27	2	0.0	0.0	0.0	1	41200
J-355	5166687.0	4078185.5	906	0.27	2	0.0	0.0	0.0	1	41200
J-356	5208677.5	4100645.5	890	0.42	5	0.0	0.0	0.0	1	131340
J-357	5165480.0	4079866.5	885	0.27	2	0.0	0.0	0.0	1	41200
J-358	5196144.5	4071992.3	920	0.32	5	0.0	0.0	0.0	1	141440
J-359	5197891.0	4071301.3	924	0.32	5	0.0	0.0	0.0	1	141440
J-36	5143896.5	4101432.5	865	0.41	4	0.0	0.0	0.0	1	80840
J-360	5213608.0	4080933.9	700	0.13	5	0.0	0.0	0.0	1	181840
J-361	5201492.0	4073062.3	922	0.13	5	0.0	0.0	0.0	1	181840

Northern Division KYPipe Model Node Information

Name	~X	~Y	Elv.	Item1	Item2	Item3	Item4	Item5	~Type	Meter Route
J-362	5199767.5	4058130.0	940	0.32	5	0.0	0.0	0.0	1	141440
J-363	5186197.9	4100667.9	953	2.76	1	0.0	0.0	0.0	1	101040
J-364	5202832.5	4069598.5	810	0.13	6	0.0	0.0	0.0	1	181840
J-365	5203603.5	4070288.5	900	0.13	6	0.0	0.0	0.0	1	181840
J-366	5203263.0	4069416.0	840	0.13	6	0.0	0.0	0.0	1	181840
J-367	5204909.0	4067552.8	820	0.13	6	0.0	0.0	0.0	1	181840
J-368	5202456.5	4069741.0	750	0.13	6	0.0	0.0	0.0	1	181840
J-369	5204402.0	4069329.5	890	0.13	6	0.0	0.0	0.0	1	181840
J-37	5162993.5	4123992.8	860	0.63	4	0.0	0.0	0.0	1	90940
J-370	5204689.0	4069046.8	880	0.13	6	0.0	0.0	0.0	1	181840
J-371	5207412.5	4069830.8	760	0.13	6	0.0	0.0	0.0	1	181840
J-372	5206963.5	4068632.8	800	0.13	6	0.0	0.0	0.0	1	181840
J-373	5207533.0	4066938.5	890	0.13	6	0.0	0.0	0.0	1	181840
J-374	5203300.5	4064875.0	810	0.13	6	0.0	0.0	0.0	1	181840
J-375	5202570.5	4063117.3	750	0.13	6	0.0	0.0	0.0	1	181840
J-376	5203058.0	4064688.3	830	0.13	6	0.0	0.0	0.0	1	181840
J-377	5203483.5	4065687.0	820	0.13	6	0.0	0.0	0.0	1	181840
J-378	5205649.5	4064645.0	800	0.13	6	0.0	0.0	0.0	1	181840
J-379	5206536.0	4065167.8	810	0.13	6	0.0	0.0	0.0	1	181840
J-38	5213033.0	4069505.5	800	0.31	6	0.0	0.0	0.0	1	141440
J-380	5204016.0	4069971.0	905	0.13	6	0.0	0.0	0.0	1	181840
J-381	5203776.0	4069459.5	955	0.13	6	0.0	0.0	0.0	1	181840
J-382	5203442.0	4068331.8	815	0.13	6	0.0	0.0	0.0	1	181840
J-383	5205030.0	4068915.5	870	0.13	6	0.0	0.0	0.0	1	181840
J-384	5207210.5	4069431.5	820	0.13	6	0.0	0.0	0.0	1	181840
J-385	5205596.5	4067717.3	750	0.13	6	0.0	0.0	0.0	1	181840
J-386	5207429.5	4069194.8	800	0.13	6	0.0	0.0	0.0	1	181840
J-387	5208681.5	4067737.3	840	0.13	6	0.0	0.0	0.0	1	181840
J-388	5208059.5	4068289.3	820	0.13	6	0.0	0.0	0.0	1	181840
J-389	5208491.0	4067378.8	820	0.13	6	0.0	0.0	0.0	1	181840
J-39	5216198.0	4068730.8	880	0.31	6	0.0	0.0	0.0	1	141440
J-390	5207694.5	4067248.3	860	0.13	6	0.0	0.0	0.0	1	181840
J-391	5207493.5	4067866.0	800	0.13	6	0.0	0.0	0.0	1	181840
J-392	5207141.5	4065755.3	820	0.13	6	0.0	0.0	0.0	1	181840
J-393	5204752.5	4066022.0	870	0.13	6	0.0	0.0	0.0	1	181840
J-394	5206829.0	4067596.5	830	0.13	6	0.0	0.0	0.0	1	181840
J-395	5204618.0	4066190.5	830	0.13	6	0.0	0.0	0.0	1	181840
J-396	5203742.5	4065094.3	880	0.13	6	0.0	0.0	0.0	1	181840
J-397	5204074.5	4065284.3	890	0.13	6	0.0	0.0	0.0	1	181840
J-398	5204078.0	4066425.5	780	0.13	6	0.0	0.0	0.0	1	181840
J-399	5203614.5	4066310.5	830	0.13	6	0.0	0.0	0.0	1	181840
J-4	5207623.5	4045328.8	923	0.32	5	0.0	0.0	0.0	1	141440
J-40	5218507.0	4068060.8	896	0.31	6	0.0	0.0	0.0	1	141440
J-400	5250511.5	4064755.8	965	0.19	6	0.0	0.0	0.0	1	202041
J-401	5222403.0	4090212.8	880	0.27	6	0.0	0.0	0.0	1	191941
J-402	5236813.0	4065533.5	925	0.19	6	0.0	0.0	0.0	1	202041
J-403	5232869.5	4069048.8	895	0.19	6	0.0	0.0	0.0	1	202041
J-404	5232514.5	4065018.0	840	0.19	6	0.0	0.0	0.0	1	202041
J-405	5232704.0	4069042.3	880	0.19	6	0.0	0.0	0.0	1	202041
J-406	5230938.0	4069375.3	825	0.19	6	0.0	0.0	0.0	1	202041
J-407	5230997.5	4066110.8	760	0.19	6	0.0	0.0	0.0	1	202041
J-408	5231949.0	4068209.8	880	0.19	6	0.0	0.0	0.0	1	202041
J-409	5182297.0	4088937.3	935	0.27	2	0.0	0.0	0.0	1	41200
J-41	5221754.5	4062865.0	800	0.31	6	0.0	0.0	0.0	1	141440
J-410	5230724.0	4068168.0	860	0.19	6	0.0	0.0	0.0	1	202041
J-411	5194895.5	4144584.3	870	0.76	1	0.2	0.0	0.2	1	40440
J-412	5195558.0	4146824.5	884	0.76	1	0.2	0.0	0.2	1	40440
J-413	5181000.0	4126112.0	905	0.76	1	0.2	0.0	0.2	1	40440
J-414	5185290.5	4133270.5	890	0.76	1	0.2	0.0	0.2	1	40440
J-415	5184905.0	4136777.8	889	0.76	1	0.2	0.0	0.2	1	40440
J-416	5185887.0	4139115.0	880	0.76	1	0.2	0.0	0.2	1	40440
J-417	5186293.0	4141782.8	865	0.76	1	0.2	0.0	0.2	1	40440
J-418	5184589.0	4097138.3	940	0.54	1	0.0	0.0	0.0	1	101040
J-419	5182573.0	4083052.0	965	0.48	2	0.0	0.0	0.0	1	41100
J-42	5224139.0	4058442.0	800	0.31	6	0.0	0.0	0.0	1	141440
J-420	5181591.5	4086085.8	980	0.48	2	0.0	0.0	0.0	1	41100

Northern Division KYPipe Model Node Information

Name	~X	~Y	Elv.	Item1	Item2	Item3	Item4	Item5	~Type	Meter Route
J-421	5183431.5	4086607.3	920	0.48	2	0.0	0.0	0.0	1	41100
J-422	5179224.5	4083437.3	940	0.27	2	0.0	0.0	0.0	1	41200
J-423	5183077.5	4083708.0	990	0.48	2	0.0	0.0	0.0	1	41100
J-424	5183345.0	4084855.8	985	0.48	2	0.0	0.0	0.0	1	41100
J-425	5183288.0	4084201.0	960	0.48	2	0.0	0.0	0.0	1	41100
J-426	5182286.5	4088309.0	908	0.27	2	0.0	0.0	0.0	1	41200
J-427	5181644.5	4085875.0	940	0.48	2	0.0	0.0	0.0	1	41100
J-428	5181328.5	4087461.0	970	0.27	2	0.0	0.0	0.0	1	41200
J-429	5182189.5	4084347.8	1000	0.48	2	0.0	0.0	0.0	1	41100
J-43	5222442.5	4049969.3	863	0.31	6	0.0	0.0	0.0	1	141440
J-430	5182226.5	4084878.0	960	0.48	2	0.0	0.0	0.0	1	41100
J-431	5183762.0	4083772.5	970	0.48	2	0.0	0.0	0.0	1	41100
J-432	5182228.0	4082368.0	950	0.48	2	0.0	0.0	0.0	1	41100
J-433	5181166.5	4085345.5	970	0.48	2	0.0	0.0	0.0	1	41100
J-434	5182791.0	4083457.3	980	0.48	2	0.0	0.0	0.0	1	41100
J-435	5181418.0	4084653.3	970	0.48	2	0.0	0.0	0.0	1	41100
J-436	5182408.5	4084143.8	970	0.48	2	0.0	0.0	0.0	1	41100
J-437	5181943.5	4084367.8	970	0.48	2	0.0	0.0	0.0	1	41100
J-438	5182377.5	4082730.8	960	0.48	2	0.0	0.0	0.0	1	41100
J-439	5181115.0	4088724.8	975	0.27	2	0.0	0.0	0.0	1	41200
J-44	5190923.0	4044828.3	675	0.24	5	0.0	0.0	0.0	1	171739
J-440	5181462.0	4083464.5	960	0.48	2	0.0	0.0	0.0	1	41100
J-441	5181792.0	4086244.5	960	0.48	2	0.0	0.0	0.0	1	41100
J-442	5181259.5	4085940.5	970	0.48	2	0.0	0.0	0.0	1	41100
J-443	5181831.5	4084600.3	960	0.48	2	0.0	0.0	0.0	1	41100
J-444	5176085.5	4067585.8	880	0.27	2	0.0	0.0	0.0	1	41200
J-445	5175336.0	4065974.0	890	0.27	2	0.0	0.0	0.0	1	41200
J-446	5165000.0	4074231.5	881	0.27	2	0.0	0.0	0.0	1	41200
J-447	5178139.5	4083829.5	930	0.27	2	0.0	0.0	0.0	1	41200
J-448	5174070.5	4071874.0	880	0.27	2	0.0	0.0	0.0	1	41200
J-449	5175489.5	4074864.5	900	0.27	2	0.0	0.0	0.0	1	41200
J-45	5187792.0	4049744.0	860	0.45	5	0.0	0.0	0.0	1	151540
J-450	5177488.0	4081725.5	940	0.27	2	0.0	0.0	0.0	1	41200
J-451	5177291.0	4078900.5	910	0.27	2	0.0	0.0	0.0	1	41200
J-452	5176736.5	4076469.0	900	0.27	2	0.0	0.0	0.0	1	41200
J-453	5171683.0	4070657.8	760	0.27	2	0.0	0.0	0.0	1	41200
J-454	5163781.0	4071860.3	884	0.27	2	0.0	0.0	0.0	1	41200
J-455	5185705.5	4084455.8	965	0.27	2	0.0	0.0	0.0	1	41200
J-456	5177892.5	4081033.8	930	0.27	2	0.0	0.0	0.0	1	41200
J-457	5176705.5	4077405.8	900	0.27	2	0.0	0.0	0.0	1	41200
J-458	5186884.5	4149849.5	590	0.32	3	0.0	0.0	0.0	1	50540
J-459	5186430.0	4149436.3	570	0.32	3	0.0	0.0	0.0	1	50540
J-46	5215394.0	4049216.8	903	0.31	6	0.0	0.0	0.0	1	141440
J-460	5185571.0	4151413.5	570	0.32	3	0.0	0.0	0.0	1	50540
J-461	5185986.0	4149617.3	555	0.32	3	0.0	0.0	0.0	1	50540
J-462	5185610.0	4150136.0	550	0.32	3	0.0	0.0	0.0	1	50540
J-463	5185644.0	4150065.0	555	0.32	3	0.0	0.0	0.0	1	50540
J-464	5185282.0	4150747.0	650	0.32	3	0.0	0.0	0.0	1	50540
J-465	5185758.5	4149096.5	540	0.32	3	0.0	0.0	0.0	1	50540
J-466	5185553.5	4151790.0	590	0.32	3	0.0	0.0	0.0	1	50540
J-467	5185189.5	4149026.8	535	0.32	3	0.0	0.0	0.0	1	50540
J-468	5186315.0	4147705.0	540	0.32	3	0.0	0.0	0.0	1	50540
J-469	5186110.5	4147696.5	550	0.32	3	0.0	0.0	0.0	1	50540
J-47	5212683.0	4046893.0	917	0.31	6	0.0	0.0	0.0	1	141440
J-470	5186356.5	4147372.0	545	0.32	3	0.0	0.0	0.0	1	50540
J-471	5186184.5	4147368.8	550	0.32	3	0.0	0.0	0.0	1	50540
J-472	5183745.0	4082017.8	945	0.27	2	0.0	0.0	0.0	1	41200
J-473	5181402.5	4079972.8	805	0.27	2	0.0	0.0	0.0	1	41200
J-474	5187392.5	4091386.0	961	0.27	2	0.0	0.0	0.0	1	41200
J-475	5178026.5	4082636.0	943	0.27	2	0.0	0.0	0.0	1	41200
J-476	5177443.5	4082944.0	935	0.27	2	0.0	0.0	0.0	1	41200
J-477	5170605.0	4070965.3	790	0.27	2	0.0	0.0	0.0	1	41200
J-478	5205189.0	4067216.3	760	0.13	6	0.0	0.0	0.0	1	181840
J-479	5178983.0	4078969.3	980	0.27	2	0.0	0.0	0.0	1	41200
J-48	5210644.0	4046632.0	920	0.31	6	0.0	0.0	0.0	1	141440
J-480	5185050.5	4144660.0	680	0.32	3	0.0	0.0	0.0	1	50540

Northern Division KYPipe Model Node Information

Name	~X	~Y	Elv.	Item1	Item2	Item3	Item4	Item5	~Type	Meter Route
J-481	5161000.5	4134810.0	515	0.33	1	0.0	0.0	0.0	1	60640
J-482	5159108.5	4135172.5	525	0.33	1	0.0	0.0	0.0	1	60640
J-483	5138893.5	4108593.0	878	0.63	4	0.0	0.0	0.0	1	90940
J-484	5159304.0	4135348.8	520	0.33	1	0.0	0.0	0.0	1	60640
J-485	5161014.5	4134696.0	503	0.33	1	0.0	0.0	0.0	1	60640
J-486	5177847.0	4113497.8	920	0.43	1	0.0	0.0	0.0	1	111140
J-487	5184986.5	4137314.0	875	0.76	1	0.2	0.0	0.2	1	40440
J-488	5183895.5	4137651.0	865	0.76	1	0.2	0.0	0.2	1	40440
J-489	5176354.0	4066268.0	880	0.27	2	0.0	0.0	0.0	1	41200
J-49	5191854.0	4041508.0	900	0.24	5	0.0	0.0	0.0	1	171739
J-490	5177098.5	4064016.0	830	0.27	2	0.0	0.0	0.0	1	41200
J-491	5165774.5	4073750.0	880	0.27	2	0.0	0.0	0.0	1	41200
J-492	5180660.5	4092075.0	940	0.27	2	0.0	0.0	0.0	1	41200
J-493	5182133.5	4095593.8	935	0.54	1	0.0	0.0	0.0	1	101040
J-494	5185670.0	4099163.0	925	0.54	1	0.0	0.0	0.0	1	101040
J-495	5170443.5	4073275.0	860	0.27	2	0.0	0.0	0.0	1	41200
J-496	5170855.5	4072338.0	865	0.27	2	0.0	0.0	0.0	1	41200
J-497	5160619.0	4071445.8	883	0.27	2	0.0	0.0	0.0	1	41200
J-498	5166230.5	4077554.5	905	0.27	2	0.0	0.0	0.0	1	41200
J-499	5176602.0	4083016.5	905	0.27	2	0.0	0.0	0.0	1	41200
J-5	5190575.3	4079872.6	958	0.62	5	0.0	0.0	0.0	1	121240
J-50	5191433.0	4044011.0	800	0.24	5	0.0	0.0	0.0	1	171739
J-500	5178697.5	4083078.0	930	0.27	2	0.0	0.0	0.0	1	41200
J-501	5177981.5	4069620.3	880	0.27	2	0.0	0.0	0.0	1	41200
J-502	5181449.5	4076940.0	905	0.27	2	0.0	0.0	0.0	1	41200
J-503	5176670.0	4094136.5	905	0.54	1	0.0	0.0	0.0	1	101040
J-504	5177138.0	4094822.0	905	0.54	1	0.0	0.0	0.0	1	101040
J-505	5172827.0	4081837.8	916	0.27	2	0.0	0.0	0.0	1	41200
J-506	5172669.5	4082231.8	910	0.27	2	0.0	0.0	0.0	1	41200
J-507	5178640.0	4083428.8	960	0.27	2	0.0	0.0	0.0	1	41200
J-508	5184468.0	4084568.3	985	0.27	2	0.0	0.0	0.0	1	41200
J-509	5171424.0	4068520.8	875	0.27	2	0.0	0.0	0.0	1	41200
J-51	5192121.5	4039362.0	910	0.24	5	0.0	0.0	0.0	1	171739
J-510	5174221.0	4067361.5	875	0.27	2	0.0	0.0	0.0	1	41200
J-511	5181210.0	4085655.3	960	0.48	2	0.0	0.0	0.0	1	41100
J-512	5181232.5	4084286.0	970	0.48	2	0.0	0.0	0.0	1	41100
J-513	5174672.0	4065176.8	870	0.27	2	0.0	0.0	0.0	1	41200
J-514	5174189.5	4065169.3	870	0.27	2	0.0	0.0	0.0	1	41200
J-515	5175863.5	4066185.3	880	0.27	2	0.0	0.0	0.0	1	41200
J-516	5183152.0	4082937.5	870	0.48	2	0.0	0.0	0.0	1	41100
J-517	5209440.0	4064993.0	900	0.31	6	0.0	0.0	0.0	1	141440
J-518	5183613.5	4082020.5	945	0.27	2	0.0	0.0	0.0	1	41200
J-519	5207658.5	4066599.5	890	0.13	6	0.0	0.0	0.0	1	181840
J-52	5194056.5	4039286.0	920	0.24	5	0.0	0.0	0.0	1	171739
J-520	5186307.0	4146938.8	542	0.32	3	0.0	0.0	0.0	1	50540
J-521	5186040.5	4148898.5	550	0.32	3	0.0	0.0	0.0	1	50540
J-522	5186259.0	4148650.0	540	0.32	3	0.0	0.0	0.0	1	50540
J-523	5186401.0	4147009.8	545	0.32	3	0.0	0.0	0.0	1	50540
J-524	5186576.0	4149677.8	590	0.32	3	0.0	0.0	0.0	1	50540
J-525	5163940.0	4134000.0	495	0.33	1	0.0	0.0	0.0	1	60640
J-526	5185110.5	4149123.8	546	0.32	3	0.0	0.0	0.0	1	50540
J-527	5186162.0	4147149.8	540	0.32	3	0.0	0.0	0.0	1	50540
J-528	5185685.0	4149797.5	550	0.32	3	0.0	0.0	0.0	1	50540
J-529	5170169.5	4131276.0	801	0.33	1	0.0	0.0	0.0	1	60640
J-53	5219988.5	4026705.8	936	0.32	5	0.0	0.0	0.0	1	141440
J-530	5163130.5	4134715.0	500	0.33	1	0.0	0.0	0.0	1	60640
J-531	5173372.0	4131474.3	800	0.33	1	0.0	0.0	0.0	1	60640
J-532	5159533.0	4135161.8	520	0.33	1	0.0	0.0	0.0	1	60640
J-533	5161271.5	4134850.3	500	0.33	1	0.0	0.0	0.0	1	60640
J-534	5161801.0	4135743.8	520	0.33	1	0.0	0.0	0.0	1	60640
J-535	5163183.5	4134904.5	505	0.33	1	0.0	0.0	0.0	1	60640
J-536	5164844.0	4128289.5	799	0.63	4	0.0	0.0	0.0	1	90940
J-537	5174577.5	4128078.3	860	0.33	1	0.0	0.0	0.0	1	60640
J-538	5160212.0	4134789.0	510	0.33	1	0.0	0.0	0.0	1	60640
J-539	5176742.5	4124950.3	880	0.33	1	0.0	0.0	0.0	1	60640
J-54	5218591.5	4029127.0	934	0.32	5	0.0	0.0	0.0	1	141440

Northern Division KYPipe Model Node Information

Name	~X	~Y	Elv.	Item1	Item2	Item3	Item4	Item5	~Type	Meter Route
J-540	5161567.5	4136097.5	520	0.33	1	0.0	0.0	0.0	1	60640
J-541	5152299.5	4107629.8	875	0.41	4	0.0	0.0	0.0	1	80840
J-542	5195858.5	4143737.3	865	0.76	1	0.2	0.0	0.2	1	40440
J-543	5157724.0	4107056.3	870	0.41	4	0.0	0.0	0.0	1	80840
J-544	5140552.5	4110524.3	802	0.63	4	0.0	0.0	0.0	1	90940
J-545	5147611.5	4113469.8	899	0.63	4	0.0	0.0	0.0	1	90940
J-546	5147770.0	4104373.0	855	0.41	4	0.0	0.0	0.0	1	80840
J-547	5139236.0	4099397.5	851	0.41	4	0.0	0.0	0.0	1	80840
J-548	5177035.5	4113653.0	860	0.41	4	0.0	0.0	0.0	1	80840
J-549	5163889.5	4112104.5	895	0.41	4	0.0	0.0	0.0	1	80840
J-55	5216859.0	4030784.5	946	0.32	5	0.0	0.0	0.0	1	141440
J-550	5164105.0	4111772.8	890	0.41	4	0.0	0.0	0.0	1	80840
J-551	5161722.0	4112930.8	895	0.41	4	0.0	0.0	0.0	1	80840
J-552	5163527.0	4112316.0	890	0.41	4	0.0	0.0	0.0	1	80840
J-553	5171603.0	4114566.5	900	0.41	4	0.0	0.0	0.0	1	80840
J-554	5171766.0	4114919.3	910	0.41	4	0.0	0.0	0.0	1	80840
J-555	5146111.0	4100991.0	910	0.41	4	0.0	0.0	0.0	1	80840
J-556	5146224.5	4101448.5	885	0.41	4	0.0	0.0	0.0	1	80840
J-557	5138275.0	4110025.3	880	0.63	4	0.0	0.0	0.0	1	90940
J-558	5143164.5	4112909.5	904	0.63	4	0.0	0.0	0.0	1	90940
J-559	5142993.5	4113121.3	904	0.63	4	0.0	0.0	0.0	1	90940
J-56	5212553.0	4036458.8	940	0.32	5	0.0	0.0	0.0	1	141440
J-560	5143143.5	4110943.5	856	0.63	4	0.0	0.0	0.0	1	90940
J-561	5170055.5	4115004.8	901	0.41	4	0.0	0.0	0.0	1	80840
J-562	5166481.0	4113193.8	890	0.41	4	0.0	0.0	0.0	1	80840
J-563	5175281.0	4113886.8	900	0.41	4	0.0	0.0	0.0	1	80840
J-564	5173231.0	4114283.3	895	0.41	4	0.0	0.0	0.0	1	80840
J-565	5161186.5	4113565.8	890	0.63	4	0.0	0.0	0.0	1	90940
J-566	5160847.5	4115027.0	880	0.63	4	0.0	0.0	0.0	1	90940
J-567	5203578.0	4122386.3	870	0.59	1	0.0	0.0	0.0	1	171740
J-568	5212854.5	4095634.8	810	0.42	5	0.0	0.0	0.0	1	131340
J-569	5214663.5	4100437.5	790	0.42	5	0.0	0.0	0.0	1	131340
J-57	5211630.5	4037744.8	944	0.32	5	0.0	0.0	0.0	1	141440
J-570	5186287.5	4089283.3	945	0.27	2	0.0	0.0	0.0	1	41200
J-571	5185756.0	4088361.5	953	0.27	2	0.0	0.0	0.0	1	41200
J-572	5185002.5	4088166.5	880	0.27	2	0.0	0.0	0.0	1	41200
J-573	5188544.5	4088239.3	940	0.27	2	0.0	0.0	0.0	1	41200
J-574	5182995.5	4088159.5	985	0.27	2	0.0	0.0	0.0	1	41200
J-575	5188925.5	4092307.8	940	0.27	2	0.0	0.0	0.0	1	41200
J-576	5181880.5	4088227.0	955	0.27	2	0.0	0.0	0.0	1	41200
J-577	5182618.0	4088115.0	960	0.27	2	0.0	0.0	0.0	1	41200
J-578	5176038.0	4047785.2	880	0.00	1	0.0	0.0	0.0	1	
J-579	5183289.5	4084166.0	960	0.48	2	0.0	0.0	0.0	1	41100
J-58	5196473.0	4065389.0	930	0.32	5	0.0	0.0	0.0	1	141440
J-580	5180975.5	4089365.8	960	0.27	2	0.0	0.0	0.0	1	41200
J-581	5183304.5	4088104.3	965	0.27	2	0.0	0.0	0.0	1	41200
J-582	5182655.0	4085944.8	965	0.48	2	0.0	0.0	0.0	1	41100
J-583	5183436.0	4084802.8	870	0.48	2	0.0	0.0	0.0	1	41100
J-584	5183091.0	4085168.8	985	0.48	2	0.0	0.0	0.0	1	41100
J-585	5184791.5	4085011.5	965	0.27	2	0.0	0.0	0.0	1	41200
J-586	5183403.5	4084806.5	870	0.48	2	0.0	0.0	0.0	1	41100
J-587	5184870.0	4085158.0	865	0.27	2	0.0	0.0	0.0	1	41200
J-588	5185524.5	4087164.5	960	0.27	2	0.0	0.0	0.0	1	41200
J-589	5184865.0	4085556.3	965	0.27	2	0.0	0.0	0.0	1	41200
J-59	5193173.5	4076223.8	922	0.32	5	0.0	0.0	0.0	1	141440
J-590	5182723.0	4084946.0	980	0.48	2	0.0	0.0	0.0	1	41100
J-591	5182713.5	4084754.0	985	0.48	2	0.0	0.0	0.0	1	41100
J-592	5182262.5	4085633.5	960	0.48	2	0.0	0.0	0.0	1	41100
J-593	5182491.0	4085320.5	970	0.48	2	0.0	0.0	0.0	1	41100
J-594	5181491.0	4086419.8	955	0.48	2	0.0	0.0	0.0	1	41100
J-595	5182127.5	4084912.5	985	0.48	2	0.0	0.0	0.0	1	41100
J-596	5181765.0	4085934.0	960	0.48	2	0.0	0.0	0.0	1	41100
J-597	5182145.5	4085167.3	980	0.48	2	0.0	0.0	0.0	1	41100
J-598	5182400.0	4085154.8	975	0.48	2	0.0	0.0	0.0	1	41100
J-599	5181696.0	4084392.0	980	0.48	2	0.0	0.0	0.0	1	41100
J-6	5244052.0	4058768.8	900	0.19	6	0.0	0.0	0.0	1	202041

Northern Division KYPipe Model Node Information

Name	~X	~Y	Elv.	Item1	Item2	Item3	Item4	Item5	~Type	Meter Route
J-60	5193029.0	4076638.3	922	0.32	5	0.0	0.0	0.0	1	141440
J-600	5182230.5	4083541.5	965	0.48	2	0.0	0.0	0.0	1	41100
J-601	5183888.5	4081761.5	953	0.27	2	0.0	0.0	0.0	1	41200
J-602	5182457.5	4084032.5	980	0.48	2	0.0	0.0	0.0	1	41100
J-603	5182161.0	4082011.3	945	0.48	2	0.0	0.0	0.0	1	41100
J-604	5203097.0	4065513.0	840	0.13	6	0.0	0.0	0.0	1	181840
J-605	5202477.0	4066098.0	810	0.13	6	0.0	0.0	0.0	1	181840
J-606	5206735.0	4068861.5	810	0.13	6	0.0	0.0	0.0	1	181840
J-607	5207454.0	4066277.3	880	0.13	6	0.0	0.0	0.0	1	181840
J-608	5206954.0	4066293.0	870	0.13	6	0.0	0.0	0.0	1	181840
J-609	5201132.0	4067262.3	890	0.13	6	0.0	0.0	0.0	1	181840
J-61	5190889.5	4079961.8	970	0.62	5	0.0	0.0	0.0	1	121240
J-610	5203917.0	4067276.8	820	0.13	6	0.0	0.0	0.0	1	181840
J-611	5203267.5	4067484.5	845	0.13	6	0.0	0.0	0.0	1	181840
J-612	5202618.5	4067549.5	880	0.13	6	0.0	0.0	0.0	1	181840
J-613	5203501.5	4067140.3	790	0.13	6	0.0	0.0	0.0	1	181840
J-614	5202000.0	4069449.3	880	0.13	6	0.0	0.0	0.0	1	181840
J-615	5202436.5	4068724.8	845	0.13	6	0.0	0.0	0.0	1	181840
J-616	5202612.0	4068380.8	820	0.13	6	0.0	0.0	0.0	1	181840
J-617	5172999.0	4043401.0	520	0.24	7	0.0	0.0	0.0	1	171739
J-618	5201508.0	4069257.3	800	0.13	6	0.0	0.0	0.0	1	181840
J-619	5172692.0	4042778.3	500	0.24	7	0.0	0.0	0.0	1	171739
J-62	5218564.0	4059574.8	911	0.31	6	0.0	0.0	0.0	1	141440
J-620	5172895.5	4044696.3	520	0.24	5	0.0	0.0	0.0	1	171739
J-621	5178536.0	4122582.5	910	0.33	1	0.0	0.0	0.0	1	60640
J-622	5173604.5	4042265.8	490	0.24	7	0.0	0.0	0.0	1	171739
J-623	5176863.5	4125026.8	880	0.33	1	0.0	0.0	0.0	1	60640
J-624	5178672.5	4119259.0	918	0.43	1	0.0	0.0	0.0	1	111140
J-625	5178021.5	4114383.0	895	0.43	1	0.0	0.0	0.0	1	111140
J-626	5174881.5	4069501.8	850	0.27	2	0.0	0.0	0.0	1	41200
J-627	5177047.0	4063999.0	830	0.27	2	0.0	0.0	0.0	1	41200
J-628	5195720.5	4065344.3	930	0.32	5	0.0	0.0	0.0	1	141440
J-629	5189105.0	4064364.0	917	0.45	5	0.0	0.0	0.0	1	151540
J-63	5213943.0	4061197.5	916	0.31	6	0.0	0.0	0.0	1	141440
J-630	5170272.5	4099894.5	888	0.54	1	0.0	0.0	0.0	1	101040
J-631	5175647.5	4094883.8	910	0.54	1	0.0	0.0	0.0	1	101040
J-632	5187353.0	4099299.8	940	0.54	1	0.0	0.0	0.0	1	101040
J-633	5177854.5	4110980.3	905	0.43	1	0.0	0.0	0.0	1	111140
J-634	5180003.5	4113110.8	920	0.43	1	0.0	0.0	0.0	1	111140
J-635	5181697.5	4119002.8	914	0.43	1	0.0	0.0	0.0	1	111140
J-636	5175421.5	4107731.3	880	0.43	1	0.0	0.0	0.0	1	111140
J-637	5187579.0	4080142.8	970	0.62	5	0.0	0.0	0.0	1	121240
J-638	5187180.5	4080422.0	970	0.62	5	0.0	0.0	0.0	1	121240
J-639	5196572.5	4084145.5	940	0.62	5	0.0	0.0	0.0	1	121240
J-64	5212195.5	4058357.0	920	0.31	6	0.0	0.0	0.0	1	141440
J-640	5198903.5	4089292.8	948	0.62	5	0.0	0.0	0.0	1	121240
J-641	5198726.0	4088790.3	940	0.62	5	0.0	0.0	0.0	1	121240
J-642	5197069.0	4086823.3	930	0.62	5	0.0	0.0	0.0	1	121240
J-643	5192982.5	4082690.5	965	0.62	5	0.0	0.0	0.0	1	121240
J-644	5190696.1	4079779.7	945	0.62	5	0.0	0.0	0.0	1	121240
J-645	5185772.1	4081291.3	950	0.62	5	0.0	0.0	0.0	1	121240
J-646	5188000.5	4079975.5	940	0.62	5	0.0	0.0	0.0	1	121240
J-647	5201485.5	4098341.5	910	0.42	5	0.0	0.0	0.0	1	131340
J-648	5199029.5	4089643.5	945	0.62	5	0.0	0.0	0.0	1	121240
J-649	5212182.0	4099477.5	900	0.42	5	0.0	0.0	0.0	1	131340
J-65	5210690.0	4059047.5	920	0.31	6	0.0	0.0	0.0	1	141440
J-650	5207498.0	4102291.3	750	0.42	5	0.0	0.0	0.0	1	131340
J-651	5210233.0	4098342.8	890	0.42	5	0.0	0.0	0.0	1	131340
J-652	5205508.5	4060842.3	935	0.31	6	0.0	0.0	0.0	1	141440
J-653	5211069.0	4067233.3	901	0.31	6	0.0	0.0	0.0	1	141440
J-654	5214518.0	4069333.0	750	0.31	6	0.0	0.0	0.0	1	141440
J-655	5194987.0	4073990.3	900	0.32	5	0.0	0.0	0.0	1	141440
J-656	5193682.0	4075947.5	922	0.32	5	0.0	0.0	0.0	1	141440
J-657	5198501.5	4059566.0	950	0.32	5	0.0	0.0	0.0	1	141440
J-658	5197460.0	4062071.8	910	0.32	5	0.0	0.0	0.0	1	141440
J-659	5195746.0	4070758.3	920	0.32	5	0.0	0.0	0.0	1	141440

Northern Division KYPipe Model Node Information

Name	~X	~Y	Elv.	Item1	Item2	Item3	Item4	Item5	~Type	Meter Route
J-66	5186495.5	4053442.3	864	0.45	5	0.0	0.0	0.0	1	151540
J-660	5193162.0	4078520.0	940	0.32	5	0.0	0.0	0.0	1	141440
J-661	5207690.5	4054173.3	930	0.31	6	0.0	0.0	0.0	1	141440
J-662	5216968.5	4060826.3	860	0.31	6	0.0	0.0	0.0	1	141440
J-663	5206418.5	4053242.5	950	0.31	6	0.0	0.0	0.0	1	141440
J-664	5208984.0	4056804.5	940	0.31	6	0.0	0.0	0.0	1	141440
J-665	5206726.0	4050727.3	915	0.32	5	0.0	0.0	0.0	1	141440
J-666	5208030.0	4044429.0	915	0.32	5	0.0	0.0	0.0	1	141440
J-667	5208851.0	4039447.3	922	0.32	5	0.0	0.0	0.0	1	141440
J-668	5211275.5	4037716.0	944	0.32	5	0.0	0.0	0.0	1	141440
J-669	5223411.0	4053026.3	883	0.31	6	0.0	0.0	0.0	1	141440
J-67	5182774.5	4054765.3	880	0.45	5	0.0	0.0	0.0	1	151540
J-670	5190312.5	4054482.0	903	0.45	5	0.0	0.0	0.0	1	151540
J-671	5185940.5	4053640.3	864	0.45	5	0.0	0.0	0.0	1	151540
J-672	5194248.0	4071631.5	943	0.45	5	0.0	0.0	0.0	1	151540
J-673	5179928.0	4030669.5	674	0.24	5	0.0	0.0	0.0	1	171739
J-674	5172075.5	4043128.5	490	0.24	7	0.0	0.0	0.0	1	171739
J-675	5176123.5	4023394.5	680	0.24	5	0.0	0.0	0.0	1	171739
J-676	5175948.5	4024324.3	680	0.24	5	0.0	0.0	0.0	1	171739
J-677	5171766.0	4042637.3	485	0.24	7	0.0	0.0	0.0	1	171739
J-678	5172371.0	4044785.5	520	0.24	5	0.0	0.0	0.0	1	171739
J-679	5178957.0	4034954.0	540	0.24	5	0.0	0.0	0.0	1	171739
J-68	5178084.0	4052662.8	697	0.24	5	0.0	0.0	0.0	1	171739
J-680	5188445.0	4047708.8	860	0.24	5	0.0	0.0	0.0	1	171739
J-681	5172051.5	4043812.8	500	0.24	5	0.0	0.0	0.0	1	171739
J-682	5174996.5	4041683.0	539	0.24	5	0.0	0.0	0.0	1	171739
J-683	5177413.0	4039978.5	542	0.24	5	0.0	0.0	0.0	1	171739
J-684	5198509.0	4121347.8	925	0.59	1	0.0	0.0	0.0	1	171740
J-685	5198620.0	4119174.8	914	0.59	1	0.0	0.0	0.0	1	171740
J-686	5199561.5	4122160.3	914	0.59	1	0.0	0.0	0.0	1	171740
J-687	5196660.5	4116376.0	920	0.59	1	0.0	0.0	0.0	1	171740
J-688	5198166.0	4117588.0	890	0.59	1	0.0	0.0	0.0	1	171740
J-689	5202211.5	4122577.8	890	0.59	1	0.0	0.0	0.0	1	171740
J-69	5176586.0	4048746.0	881	0.24	5	0.0	0.0	0.0	1	171739
J-690	5198328.5	4118826.3	910	0.59	1	0.0	0.0	0.0	1	171740
J-691	5194969.5	4121923.5	900	0.59	1	0.0	0.0	0.0	1	171740
J-692	5196504.0	4116022.0	914	0.59	1	0.0	0.0	0.0	1	171740
J-693	5198943.0	4120002.3	920	0.59	1	0.0	0.0	0.0	1	171740
J-694	5198730.5	4119407.8	900	0.59	1	0.0	0.0	0.0	1	171740
J-695	5183344.0	4085176.8	985	21.07	2	0.0	0.0	0.0	1	41200
J-696	5206435.0	4079381.8	882	0.13	5	0.0	0.0	0.0	1	181840
J-697	5205725.5	4069624.3	810	0.13	6	0.0	0.0	0.0	1	181840
J-698	5208457.0	4069678.3	740	0.13	6	0.0	0.0	0.0	1	181840
J-699	5208982.0	4069893.5	800	0.13	6	0.0	0.0	0.0	1	181840
J-7	5154377.5	4110162.1	910	0.41	4	0.0	0.0	0.0	1	80840
J-70	5176479.5	4046833.3	870	0.24	5	0.0	0.0	0.0	1	171739
J-700	5209013.5	4069195.3	820	0.13	6	0.0	0.0	0.0	1	181840
J-7000	5231886.5	4037051.8	921	0.66	6	0.0	0.0	0.0	1	212141
J-701	5209278.5	4067876.3	760	0.13	6	0.0	0.0	0.0	1	181840
J-702	5206641.0	4066281.5	820	0.13	6	0.0	0.0	0.0	1	181840
J-703	5207081.5	4064963.3	820	0.13	6	0.0	0.0	0.0	1	181840
J-704	5206131.5	4064213.3	760	0.13	6	0.0	0.0	0.0	1	181840
J-705	5205757.0	4065264.8	840	0.13	6	0.0	0.0	0.0	1	181840
J-706	5205145.0	4065631.5	820	0.13	6	0.0	0.0	0.0	1	181840
J-707	5205904.0	4066879.0	820	0.13	6	0.0	0.0	0.0	1	181840
J-708	5203321.0	4064360.5	780	0.13	6	0.0	0.0	0.0	1	181840
J-709	5203007.5	4063662.3	840	0.13	6	0.0	0.0	0.0	1	181840
J-71	5172725.0	4042450.3	480	0.24	7	0.0	0.0	0.0	1	171739
J-710	5203157.5	4063153.3	830	0.13	6	0.0	0.0	0.0	1	181840
J-711	5201947.5	4063765.3	790	0.13	6	0.0	0.0	0.0	1	181840
J-712	5201781.0	4064523.8	760	0.13	6	0.0	0.0	0.0	1	181840
J-713	5202317.0	4064164.0	820	0.13	6	0.0	0.0	0.0	1	181840
J-714	5201832.5	4065011.5	800	0.13	6	0.0	0.0	0.0	1	181840
J-715	5202354.0	4065210.8	810	0.13	6	0.0	0.0	0.0	1	181840
J-716	5201620.0	4065711.0	830	0.13	6	0.0	0.0	0.0	1	181840
J-717	5202871.5	4066978.0	820	0.13	6	0.0	0.0	0.0	1	181840

Northern Division KYPipe Model Node Information

Name	~X	~Y	Elv.	Item1	Item2	Item3	Item4	Item5	~Type	Meter Route
J-718	5200164.5	4066898.8	900	0.13	6	0.0	0.0	0.0	1	181840
J-719	5200715.5	4067989.3	800	0.13	6	0.0	0.0	0.0	1	181840
J-72	5177820.5	4038645.0	530	0.24	5	0.0	0.0	0.0	1	171739
J-720	5200628.5	4068373.5	730	0.13	6	0.0	0.0	0.0	1	181840
J-721	5201231.5	4068586.8	810	0.13	6	0.0	0.0	0.0	1	181840
J-722	5215662.5	4081402.5	790	0.27	6	0.0	0.0	0.0	1	191941
J-723	5216266.0	4078917.3	865	0.27	6	0.0	0.0	0.0	1	191941
J-724	5218850.0	4089235.0	837	0.27	6	0.0	0.0	0.0	1	191941
J-725	5228102.0	4085682.8	869	0.27	6	0.0	0.0	0.0	1	191941
J-726	5220880.5	4085682.8	854	0.27	6	0.0	0.0	0.0	1	191941
J-727	5226913.5	4081965.3	865	0.27	6	0.0	0.0	0.0	1	191941
J-728	5231496.5	4077628.3	902	0.27	6	0.0	0.0	0.0	1	191941
J-729	5218402.5	4076329.5	863	0.27	6	0.0	0.0	0.0	1	191941
J-73	5214328.5	4102906.3	898	0.42	5	0.0	0.0	0.0	1	131340
J-730	5213338.5	4080992.5	700	0.13	5	0.0	0.0	0.0	1	181840
J-731	5213215.5	4072366.8	877	0.27	6	0.0	0.0	0.0	1	191941
J-732	5227523.0	4076796.0	880	0.19	6	0.0	0.0	0.0	1	202041
J-733	5240884.5	4069776.0	937	0.19	6	0.0	0.0	0.0	1	202041
J-734	5250867.5	4064800.5	963	0.19	6	0.0	0.0	0.0	1	202041
J-735	5245616.5	4062537.0	910	0.19	6	0.0	0.0	0.0	1	202041
J-736	5241759.5	4060019.8	872	0.19	6	0.0	0.0	0.0	1	202041
J-737	5240320.0	4058773.5	820	0.19	6	0.0	0.0	0.0	1	202041
J-738	5242687.0	4060697.0	885	0.19	6	0.0	0.0	0.0	1	202041
J-739	5249062.0	4064711.0	965	0.19	6	0.0	0.0	0.0	1	202041
J-74	5208025.0	4091566.3	905	0.42	5	0.0	0.0	0.0	1	131340
J-740	5237838.0	4056993.8	880	0.19	6	0.0	0.0	0.0	1	202041
J-741	5243459.5	4061201.8	885	0.19	6	0.0	0.0	0.0	1	202041
J-742	5248720.0	4064721.3	970	0.19	6	0.0	0.0	0.0	1	202041
J-743	5237236.0	4047767.5	840	0.66	6	0.0	0.0	0.0	1	212141
J-744	5234049.0	4047557.3	760	0.66	6	0.0	0.0	0.0	1	212141
J-745	5224355.0	4042129.5	755	0.66	6	0.0	0.0	0.0	1	212141
J-746	5240000.0	4062461.8	900	0.19	6	0.0	0.0	0.0	1	202041
J-747	5236239.0	4066455.8	900	0.19	6	0.0	0.0	0.0	1	202041
J-748	5245789.5	4048983.0	820	0.19	6	0.0	0.0	0.0	1	202041
J-749	5177931.5	4079710.8	920	0.27	2	0.0	0.0	0.0	1	41200
J-75	5211267.5	4098188.5	895	0.42	5	0.0	0.0	0.0	1	131340
J-750	5180787.5	4090535.5	980	0.27	2	0.0	0.0	0.0	1	41200
J-751	5180674.5	4093074.5	955	0.27	2	0.0	0.0	0.0	1	41200
J-752	5170864.0	4130422.5	815	0.33	1	0.0	0.0	0.0	1	60640
J-753	5166727.0	4113248.3	890	0.41	4	0.0	0.0	0.0	1	80840
J-754	5164896.5	4112548.5	860	0.41	4	0.0	0.0	0.0	1	80840
J-755	5219894.0	4083989.3	848	0.27	6	0.0	0.0	0.0	1	191941
J-756	5185379.0	4072504.3	900	0.45	5	0.0	0.0	0.0	1	151540
J-757	5202703.0	4075785.3	915	0.13	5	0.0	0.0	0.0	1	181840
J-758	5179032.5	4107409.0	920	0.43	1	0.0	0.0	0.0	1	111140
J-759	5186260.5	4081106.2	944	0.62	5	0.0	0.0	0.0	1	121240
J-76	5213841.0	4100326.8	881	0.42	5	0.0	0.0	0.0	1	131340
J-760	5186110.9	4081210.7	944	0.62	5	0.0	0.0	0.0	1	121240
J-761	5185869.5	4103368.3	965	0.59	1	0.0	0.0	0.0	1	171740
J-762	5186332.3	4081302.5	944	0.62	5	0.0	0.0	0.0	1	121240
J-763	5207718.5	4066487.8	910	0.13	6	0.0	0.0	0.0	1	181840
J-764	5173103.9	4043973.6	600	0.24	7	0.0	0.0	0.0	1	171739
J-765	5186557.7	4079776.5	940	0.62	5	0.0	0.0	0.0	1	121240
J-766	5187752.7	4081180.2	1000	0.62	5	0.0	0.0	0.0	1	121240
J-767	5244021.7	4061439.7	910	0.19	6	0.0	0.0	0.0	1	202041
J-768	5244115.2	4061463.3	910	0.19	6	0.0	0.0	0.0	1	202041
J-769	5181244.0	4094203.5	966	0.54	1	0.0	0.0	0.0	1	101040
J-77	5214325.5	4099865.8	845	0.42	5	0.0	0.0	0.0	1	131340
J-770	5181363.0	4094438.3	966	0.54	1	0.0	0.0	0.0	1	101040
J-771	5176591.0	4113676.8	860	0.41	4	0.0	0.0	0.0	1	80840
J-772	5182680.4	4084128.2	990	0.00	6	0.0	0.0	0.0	1	41100
J-773	5174181.0	4063274.8	872	0.27	2	0.0	0.0	0.0	1	41200
J-774	5186862.4	4032315.6	800	0.24	5	0.0	0.0	0.0	1	171739
J-775	5138229.0	4096162.8	630	0.41	4	0.0	0.0	0.0	1	80840
J-776	5171026.0	4123781.0	870	0.43	1	0.0	0.0	0.0	1	111140
J-777	5140904.5	4094630.3	520	0.41	4	0.0	0.0	0.0	1	80840

Northern Division KYPipe Model Node Information

Name	~X	~Y	Elv.	Item1	Item2	Item3	Item4	Item5	~Type	Meter Route
J-778	5171947.3	4124426.9	850	0.43	1	0.0	0.0	0.0	1	111140
J-779	5212453.5	4080658.5	700	0.13	5	0.0	0.0	0.0	1	181840
J-78	5215755.5	4095886.3	790	0.42	5	0.0	0.0	0.0	1	131340
J-780	5178921.9	4121922.9	910	0.33	1	0.0	0.0	0.0	1	60640
J-781	5182699.8	4036293.1	804	0.24	5	0.0	0.0	0.0	1	171739
J-782	5180713.0	4034134.2	600	0.24	5	0.0	0.0	0.0	1	171739
J-783	5187653.4	4040306.3	938	0.24	5	0.0	0.0	0.0	1	171739
J-784	5172519.9	4042208.6	475	0.00	1	0.0	0.0	0.0	1	171739
J-785	5172979.8	4042298.9	480	0.00	1	0.0	0.0	0.0	1	171739
J-786	5207853.0	4045419.3	900	0.31	1	0.0	0.0	0.0	1	
J-787	5186068.1	4102947.8	940	0.54	1	0.0	0.0	0.0	1	101040
J-788	5182858.9	4086077.7	960	0.00	1	0.0	0.0	0.0	1	41100
J-789	5182192.3	4084396.4	980	0.00	1	0.0	0.0	0.0	1	41100
J-79	5204279.5	4091665.5	937	0.42	5	0.0	0.0	0.0	1	131340
J-790	5183799.8	4086659.5	900	0.00	1	0.0	0.0	0.0	1	41100
J-791	5182233.3	4084158.2	970	0.00	1	0.0	0.0	0.0	1	41100
J-792	5237018.8	4065467.4	925	0.00	1	0.0	0.0	0.0	1	202041
J-793	5162184.9	4136037.8	640	0.00	1	0.0	0.0	0.0	1	
J-794	5200555.4	4058481.7	953	0.00	1	0.0	0.0	0.0	1	
J-795	5185703.0	4103631.0	965	0.00	1	0.0	0.0	0.0	1	
J-796	5209178.9	4065008.0	910	0.00	1	0.0	0.0	0.0	1	
J-797	5207934.4	4045450.3	900	0.00	1	0.0	0.0	0.0	1	
J-798	5181809.0	4088349.0	960	4.86	2	0.0	0.0	0.0	1	41200
J-799	5174740.8	4042138.5	539	0.00	1	0.0	0.0	0.0	1	
J-8	5204935.5	4051992.5	943	0.32	5	0.0	0.0	0.0	1	141440
J-80	5214065.0	4100113.8	880	0.42	5	0.0	0.0	0.0	1	131340
J-800	5177573.1	4039747.2	542	0.00	1	0.0	0.0	0.0	1	
J-801	5177978.1	4037495.0	539	0.00	1	0.0	0.0	0.0	1	
J-802	5179280.7	4032999.7	567	0.00	1	0.0	0.0	0.0	1	
J-803	5179922.2	4030546.4	674	0.00	1	0.0	0.0	0.0	1	
J-804	5176573.3	4026103.3	658	0.00	1	0.0	0.0	0.0	1	
J-805	5177812.4	4038609.7	530	0.25	0	0.0	0.0	0.0	1	
J-806	5177650.4	4028208.0	730	0.00	1	0.0	0.0	0.0	1	
J-807	5175556.5	4047058.7	840	0.00	1	0.0	0.0	0.0	1	
J-808	5176436.3	4048613.3	881	0.00	1	0.0	0.0	0.0	1	
J-809	5177740.2	4053953.9	697	0.00	1	0.0	0.0	0.0	1	
J-81	5201667.0	4095607.5	934	0.42	5	0.0	0.0	0.0	1	131340
J-810	5176445.7	4055578.8	800	0.00	1	0.0	0.0	0.0	1	
J-811	5175901.5	4056541.8	640	0.00	1	0.0	0.0	0.0	1	
J-812	5174888.1	4059875.7	830	0.00	1	0.0	0.0	0.0	1	
J-813	5174418.3	4063170.0	872	0.00	1	0.0	0.0	0.0	1	
J-814	5175560.5	4067026.0	898	0.00	1	0.0	0.0	0.0	1	
J-815	5178368.6	4070450.6	800	0.00	1	0.0	0.0	0.0	1	
J-816	5180097.0	4073866.7	900	0.00	1	0.0	0.0	0.0	1	
J-817	5181654.8	4076764.3	905	0.00	1	0.0	0.0	0.0	1	
J-818	5175413.8	4047989.3	860	0.00	1	0.0	0.0	0.0	1	
J-819	5175610.3	4048106.8	860	0.00	1	0.0	0.0	0.0	1	
J-82	5198683.5	4097903.3	900	0.42	5	0.0	0.0	0.0	1	131340
J-820	5175418.7	4047871.1	860	0.00	1	0.0	0.0	0.0	1	
J-821	5175614.8	4047995.1	860	0.00	1	0.0	0.0	0.0	1	
J-822	5175618.7	4047875.1	860	0.00	1	0.0	0.0	0.0	1	
J-823	5175413.1	4048099.6	860	0.00	1	0.0	0.0	0.0	1	
J-824	5174044.5	4045736.1	800	0.00	1	0.0	0.0	0.0	1	
J-825	5205406.4	4043895.2	923	0.00	1	0.0	0.0	0.0	1	
J-826	5174309.8	4043481.4	480	0.00	1	0.0	0.0	0.0	1	
J-827	5200259.3	4044446.6	800	0.00	1	0.0	0.0	0.0	1	
J-828	5198105.3	4044479.0	700	0.00	1	0.0	0.0	0.0	1	
J-829	5178301.7	4052546.0	697	0.00	1	0.0	0.0	0.0	1	
J-83	5209101.5	4096790.0	888	0.42	5	0.0	0.0	0.0	1	131340
J-830	5192584.0	4044320.4	656	0.00	1	0.0	0.0	0.0	1	
J-832	5173980.4	4045266.9	740	0.00	1	0.0	0.0	0.0	1	
J-833	5183931.3	4081182.7	960	0.00	1	0.0	0.0	0.0	1	
J-84	5209767.0	4098188.8	887	0.42	5	0.0	0.0	0.0	1	131340
J-85	5208440.5	4091831.5	902	0.42	5	0.0	0.0	0.0	1	131340
J-86	5188649.0	4069397.8	907	0.45	5	0.0	0.0	0.0	1	151540
J-87	5191198.5	4070814.8	918	0.45	5	0.0	0.0	0.0	1	151540

Northern Division KYPipe Model Node Information

Name	~X	~Y	Elv.	Item1	Item2	Item3	Item4	Item5	~Type	Meter Route
J-88	5196150.5	4069113.3	925	0.32	5	0.0	0.0	0.0	1	141440
J-89	5188791.4	4081115.0	944	0.62	5	0.0	0.0	0.0	1	121240
J-9	5205119.5	4052788.5	968	0.32	5	0.0	0.0	0.0	1	141440
J-90	5184423.0	4068866.8	800	0.45	5	0.0	0.0	0.0	1	151540
J-91	5184534.0	4070735.3	884	0.45	5	0.0	0.0	0.0	1	151540
J-92	5185530.0	4073174.8	900	0.45	5	0.0	0.0	0.0	1	151540
J-93	5186598.0	4075038.8	920	0.45	5	0.0	0.0	0.0	1	151540
J-94	5196987.0	4084685.0	940	0.62	5	0.0	0.0	0.0	1	121240
J-946	5209576.9	3973803.4	860	0.00	1	0.0	0.0	0.0	1	
J-95	5195980.0	4083914.3	948	0.62	5	0.0	0.0	0.0	1	121240
J-957	5209879.6	3973615.7	860	0.00	1	0.0	0.0	0.0	1	
J-959	5209578.5	3973616.2	860	0.00	1	0.0	0.0	0.0	1	
J-96	5199614.5	4090489.5	948	0.42	5	0.0	0.0	0.0	1	131340
J-960	5209578.5	3973722.1	860	0.00	1	0.0	0.0	0.0	1	
J-961	5209878.4	3973720.4	860	0.00	1	0.0	0.0	0.0	1	
J-963	5209878.4	3973804.0	860	0.00	1	0.0	0.0	0.0	1	
J-967	5180013.9	4007642.8	500	0.00	1	0.0	0.0	0.0	1	
J-968	5173587.4	4019926.7	745.5	0.00	1	0.0	0.0	0.0	1	
J-97	5206390.0	4090613.5	920	0.42	5	0.0	0.0	0.0	1	131340
J-971	5173582.9	4019692.3	745.5	0.00	1	0.0	0.0	0.0	1	
J-973	5174051.6	4019519.7	745.5	0.00	1	0.0	0.0	0.0	1	
J-975	5184816.1	4006723.5	558	0.00	1	0.0	0.0	0.0	1	
J-976	5173579.5	4019519.8	745.5	0.00	1	0.0	0.0	0.0	1	
J-977	5174047.7	4019324.2	745.5	0.00	1	0.0	0.0	0.0	1	
J-978	5173579.1	4019328.9	745.5	0.00	1	0.0	0.0	0.0	1	
J-98	5203075.0	4093339.0	943	0.42	5	0.0	0.0	0.0	1	131340
J-981	5173575.9	4019117.7	745.5	0.00	1	0.0	0.0	0.0	1	
J-982	5174051.5	4019689.2	745.5	0.00	1	0.0	0.0	0.0	1	
J-983	5174048.7	4019129.1	745.5	0.00	1	0.0	0.0	0.0	1	
J-984	5186231.1	4005830.3	492	0.00	1	0.0	0.0	0.0	1	
J-985	5187477.5	4002918.9	540	0.00	1	0.0	0.0	0.0	1	
J-987	5199937.2	3986635.1	805	0.00	1	0.0	0.0	0.0	1	
J-988	5211328.4	3974326.1	840	0.00	1	0.0	0.0	0.0	1	
J-99	5201513.0	4101117.3	900	0.42	5	0.0	0.0	0.0	1	131340
J-990	5211326.4	3974479.1	826	0.00	1	0.0	0.0	0.0	1	
J-991	5210520.1	3973541.6	854	0.00	1	0.0	0.0	0.0	1	
J-992	5209642.4	3974093.2	870	0.00	1	0.0	0.0	0.0	1	
J-993	5209570.3	3974024.9	870	0.00	1	0.0	0.0	0.0	1	
OPL	5248363.0	4054606.0	900	0.19	6	0.0	0.0	0.0	1	202041
OTL	5250042.0	4061655.3	970	0.19	6	0.0	0.0	0.0	1	202041
Bromley Tank	5178800.6	4121883.8	908	1015.00	908	1000.0	0.0	-17.0	2	
Fairgrounds	5181898.8	4088923.8	971	1099.50	1065.5	1087.5	0.0	400000.0	2	
Glencoe Tank	5185238.0	4144936.0	793	820.00	793	793.0	0.0	-25.0	2	
Monterey Tank	5173174.2	4044073.5	600	651.30	600	634.5	0.0	-19.7	2	
New Columbus	5250532.6	4064869.4	980	1119.00	980	1085.0	0.0	-17.0	2	
New EST	5188729.6	4080324.3	960	1124.00	1079	1110.0	0.0	-42.0	2	
New GST	5175290.4	4047992.0	850	895.00	850	885.0	0.0	-36.0	2	
Perry St. Tank	5183420.5	4083970.3	971.5	1094.50	1061.5	1087.5	0.0	100000.0	2	
Wheatley Tank	5154441.8	4110415.5	909.5	1021.50	909.5	1014.5	0.0	-14.0	2	
Woodlake Tank#1	5209572.8	3974145.7	870	910.00	870	897.3	0.0	-113.0	2	
KRS2 Pool 3	5173332.0	4020203.0	727	730.70	1	0.0	0.0	0.0	3	
Learning Oak MM	5246077.6	4048587.8	1060	1065.00	0	0.0	0.0	0.0	3	
R-1	5179209.5	4078767.0	900	900.00	0	0.0	0.0	0.0	3	
R-2	5185248.0	4151918.5	600	850.00	0	0.0	0.0	0.0	3	
R-3	5137027.5	4109464.3	868	1040.00	868	1000.0	0.0	0.0	3	
Rockdale MM	5232209.5	4037032.1	1095	1060.00	0	0.0	0.0	0.0	3	
KRS2 HS#1	5173799.7	4019124.8	745.5	0.80	1	0.0	0.0	0.0	4	
KRS2 HS#2	5173813.3	4019324.9	745.5	0.80	1	0.0	0.0	0.0	4	
KRS2 HS#3	5173829.1	4019517.0	745.5	1.00	1	0.0	0.0	0.0	4	
KRS2 HS#4	5173820.1	4019688.4	745.5	1.00	1	0.0	0.0	0.0	4	
New Columbus Pump	5244066.0	4061456.5	910	1.00	0	0.0	0.0	0.0	4	
New PS-1	5175505.9	4048106.8	820	1.00	0	0.0	0.0	0.0	4	
New PS-2	5175509.8	4047995.5	820	1.00	1	0.0	0.0	0.0	4	
New PS-3	5175513.4	4047872.9	820	1.00	0	0.0	0.0	0.0	4	
Pump-1	5178999.2	4078759.3	874	1.00	0	0.0	0.0	0.0	4	
Pump-2	5181088.6	4094450.4	966	1.00	0	0.0	0.0	0.0	4	

Northern Division KYPipe Model Node Information

Name	~X	~Y	Elv.	Item1	Item2	Item3	Item4	Item5	~Type	Meter Route
Pump-3	5176805.6	4113267.4	860	1.00	0	0.0	0.0	0.0	4	
Woodlake#1	5209726.0	3973805.7	874.5	1.00	1	0.0	0.0	0.0	4	
Woodlake#2	5209726.0	3973720.4	874.5	0.80	1	0.0	0.0	0.0	4	
Woodlake#3	5209724.4	3973613.9	874.5	1.00	1	0.0	0.0	0.0	4	
CV-1	5240894.5	4059909.5	880	0.00	0	0.0	0.0	0.0	5	
H-1	5179344.0	4089522.3	945	0.00	0	0.0	0.0	0.0	6	41200
H-10	5185699.0	4149208.3	540	0.00	0	0.0	0.0	0.0	6	50540
H-11	5185093.0	4149177.0	540	0.00	0	0.0	0.0	0.0	6	50540
H-12	5185399.0	4149166.0	540	0.00	0	0.0	0.0	0.0	6	50540
H-13	5178934.0	4083078.3	915	0.00	0	0.0	0.0	0.0	6	41200
H-14	5173675.5	4042507.8	490	0.00	0	0.0	0.0	0.0	6	171739
H-15	5172548.5	4042245.8	475	0.00	0	0.0	0.0	0.0	6	171739
H-16	5172013.0	4042944.0	490	0.00	0	0.0	0.0	0.0	6	171739
H-17	5172763.5	4042432.0	490	0.00	0	0.0	0.0	0.0	6	171739
H-18	5173023.5	4042542.0	495	0.00	0	0.0	0.0	0.0	6	171739
H-19	5231234.0	4071481.8	865	0.00	0	0.0	0.0	0.0	6	202041
H-2	5183795.0	4086660.0	900	0.00	0	0.0	0.0	0.0	6	41100
H-20	5185204.0	4149504.0	845	0.00	0	0.0	0.0	0.0	6	50540
H-21	5186061.0	4149629.3	555	0.00	0	0.0	0.0	0.0	6	50540
H-22	5159297.5	4135263.8	520	0.00	0	0.0	0.0	0.0	6	60640
H-23	5161008.0	4134748.3	503	0.00	0	0.0	0.0	0.0	6	60640
H-24	5180889.5	4088067.3	960	0.00	0	0.0	0.0	0.0	6	41200
H-25	5183145.0	4088130.8	965	0.00	0	0.0	0.0	0.0	6	41200
H-26	5184583.5	4086301.3	940	0.00	0	0.0	0.0	0.0	6	41200
H-27	5184963.5	4086871.0	955	0.00	0	0.0	0.0	0.0	6	41200
H-28	5184783.0	4086238.0	960	0.00	0	0.0	0.0	0.0	6	41200
H-29	5182858.5	4086082.3	960	0.00	0	0.0	0.0	0.0	6	41100
H-3	5186183.5	4146951.5	540	0.00	0	0.0	0.0	0.0	6	50540
H-30	5181340.5	4087265.0	965	0.00	0	0.0	0.0	0.0	6	
H-31	5183228.0	4084071.8	950	0.00	0	0.0	0.0	0.0	6	41100
H-32	5183438.5	4084890.0	975	0.00	0	0.0	0.0	0.0	6	41100
H-33	5183801.0	4084900.0	980	0.00	0	0.0	0.0	0.0	6	41100
H-34	5185866.5	4084334.0	960	0.00	0	0.0	0.0	0.0	6	41200
H-35	5182173.5	4083777.5	970	0.00	0	0.0	0.0	0.0	6	41100
H-36	5183116.5	4083726.5	970	0.00	0	0.0	0.0	0.0	6	41100
H-37	5183640.0	4083967.8	970	0.00	0	0.0	0.0	0.0	6	41100
H-38	5184043.5	4084158.3	970	0.00	0	0.0	0.0	0.0	6	41100
H-39	5184460.5	4084548.5	980	0.00	0	0.0	0.0	0.0	6	41200
H-4	5186145.0	4147312.0	540	0.00	0	0.0	0.0	0.0	6	50540
H-40	5182721.5	4084900.5	985	0.00	0	0.0	0.0	0.0	6	41100
H-41	5182515.0	4085349.0	960	0.00	0	0.0	0.0	0.0	6	41100
H-42	5182177.0	4085972.3	920	0.00	0	0.0	0.0	0.0	6	41100
H-43	5181818.0	4086282.5	960	0.00	0	0.0	0.0	0.0	6	41100
H-44	5181355.5	4085403.8	985	0.00	0	0.0	0.0	0.0	6	41100
H-45	5181160.5	4085302.3	970	0.00	0	0.0	0.0	0.0	6	41100
H-46	5181294.0	4086140.5	980	0.00	0	0.0	0.0	0.0	6	41100
H-47	5181215.5	4085686.8	970	0.00	0	0.0	0.0	0.0	6	41100
H-48	5181599.5	4086053.5	965	0.00	0	0.0	0.0	0.0	6	41100
H-49	5181623.0	4085705.0	965	0.00	0	0.0	0.0	0.0	6	41100
H-5	5186320.5	4147659.5	540	0.00	0	0.0	0.0	0.0	6	50540
H-50	5181532.0	4085075.3	960	0.00	0	0.0	0.0	0.0	6	41100
H-51	5182698.5	4084560.3	985	0.00	0	0.0	0.0	0.0	6	41100
H-52	5182664.5	4084170.3	965	0.00	0	0.0	0.0	0.0	6	41100
H-53	5182438.5	4084353.5	985	0.00	0	0.0	0.0	0.0	6	41100
H-54	5182223.0	4084835.8	965	0.00	0	0.0	0.0	0.0	6	41100
H-55	5181498.5	4084643.0	960	0.00	0	0.0	0.0	0.0	6	41100
H-56	5182192.5	4084399.5	980	0.00	0	0.0	0.0	0.0	6	41100
H-57	5182228.5	4084158.5	980	0.00	0	0.0	0.0	0.0	6	41100
H-58	5181448.0	4084256.5	970	0.00	0	0.0	0.0	0.0	6	41100
H-59	5180530.0	4084373.3	980	0.00	0	0.0	0.0	0.0	6	41100
H-6	5186287.5	4148124.3	540	0.00	0	0.0	0.0	0.0	6	50540
H-60	5180120.5	4083999.5	960	0.00	0	0.0	0.0	0.0	6	41100
H-61	5179731.5	4083101.0	965	0.00	0	0.0	0.0	0.0	6	41200
H-62	5183238.0	4080807.3	850	0.00	0	0.0	0.0	0.0	6	
H-63	5177563.0	4079752.3	910	0.00	0	0.0	0.0	0.0	6	41200
H-64	5178745.0	4083430.3	980	0.00	0	0.0	0.0	0.0	6	41200

Northern Division KYPipe Model Node Information

Name	~X	~Y	Elv.	Item1	Item2	Item3	Item4	Item5	~Type	Meter Route
H-65	5183727.0	4081355.5	953	0.00	0	0.0	0.0	0.0	6	
H-66	5181171.0	4083951.8	965	0.00	0	0.0	0.0	0.0	6	41100
H-67	5181458.5	4083528.3	950	0.00	0	0.0	0.0	0.0	6	41100
H-68	5182111.0	4083385.8	955	0.00	0	0.0	0.0	0.0	6	41100
H-69	5182644.5	4083702.5	965	0.00	0	0.0	0.0	0.0	6	41100
H-7	5186305.5	4148886.0	540	0.00	0	0.0	0.0	0.0	6	50540
H-70	5182818.5	4083412.8	965	0.00	0	0.0	0.0	0.0	6	41100
H-71	5181850.0	4082399.3	920	0.00	0	0.0	0.0	0.0	6	41100
H-72	5182191.5	4082173.8	950	0.00	0	0.0	0.0	0.0	6	41100
H-73	5182637.5	4083084.3	970	0.00	0	0.0	0.0	0.0	6	41100
H-74	5183461.0	4081864.3	950	0.00	0	0.0	0.0	0.0	6	41200
H-75	5183210.0	4082858.0	975	0.00	0	0.0	0.0	0.0	6	41100
H-76	5183612.5	4082237.8	950	0.00	0	0.0	0.0	0.0	6	
H-77	5184005.0	4081590.3	953	0.00	0	0.0	0.0	0.0	6	41200
H-78	5174164.0	4042278.8	515	0.00	0	0.0	0.0	0.0	6	171739
H-79	5161660.0	4135009.3	490	0.00	0	0.0	0.0	0.0	6	60640
H-8	5185833.0	4148883.3	540	0.00	0	0.0	0.0	0.0	6	50540
H-80	5162027.5	4135493.8	515	0.00	0	0.0	0.0	0.0	6	60640
H-81	5161828.0	4135721.0	530	0.00	0	0.0	0.0	0.0	6	60640
H-82	5161602.0	4136045.5	520	0.00	0	0.0	0.0	0.0	6	60640
H-83	5163845.5	4134043.8	495	0.00	0	0.0	0.0	0.0	6	60640
H-84	5163277.5	4112461.5	895	0.00	0	0.0	0.0	0.0	6	80840
H-85	5162091.5	4113083.3	890	0.00	0	0.0	0.0	0.0	6	80840
H-86	5161549.5	4112841.8	894	0.00	0	0.0	0.0	0.0	6	80840
H-87	5142928.5	4100622.3	865	0.00	0	0.0	0.0	0.0	6	80840
H-88	5199998.5	4121526.3	920	0.00	0	0.0	0.0	0.0	6	171740
H-89	5237014.0	4065469.0	925	0.00	0	0.0	0.0	0.0	6	202041
H-9	5185896.0	4148116.5	540	0.00	0	0.0	0.0	0.0	6	50540
H-90	5215113.0	4093182.8	675	0.00	0	0.0	0.0	0.0	6	191941
V-1	5177597.0	4113242.8	903	0.00	0	0.0	0.0	0.0	7	
V-2	5185368.0	4144411.5	680	0.00	0	0.0	0.0	0.0	7	
V-4	5181298.2	4094310.5	966	0.00	0	0.0	0.0	0.0	7	
V-6	5179926.6	4033681.1	545	0.00	0	0.0	0.0	0.0	7	
RV-1	5174274.0	4044807.0	680	70.00	0	0.0	0.0	0.0	9	
RV-2	5164755.5	4133621.3	501	80.00	0	0.0	0.0	0.0	9	
RV-3	5185469.0	4151608.8	580	65.00	0	0.0	0.0	0.0	9	
RV-4	5201527.0	4069913.0	800	50.00	0	0.0	0.0	0.0	9	
RV-5	5180249.5	4033736.8	545	130.00	0	0.0	0.0	0.0	9	
MM-CC	5138013.3	4109003.9	868	0.00	0	0.0	0.0	0.0	10	
MM-GC	5185349.5	4151776.2	580	0.00	0	0.0	0.0	0.0	10	
MM-ON	5180815.8	4090308.1	960	0.00	0	0.0	0.0	0.0	10	
MM-OS	5184070.4	4081646.2	953	0.00	0	0.0	0.0	0.0	10	
AV-1	5178853.2	4121836.6	909	0.00	1	0.0	0.0	0.0	12	
AV-2	5154412.2	4110298.8	909.5	0.00	1	0.0	0.0	0.0	12	
AV-3	5173031.5	4044157.7	600	1.00	1	0.0	0.0	0.0	12	
AV-New GST	5175177.1	4047911.9	840	0.00	1	0.0	0.0	0.0	12	

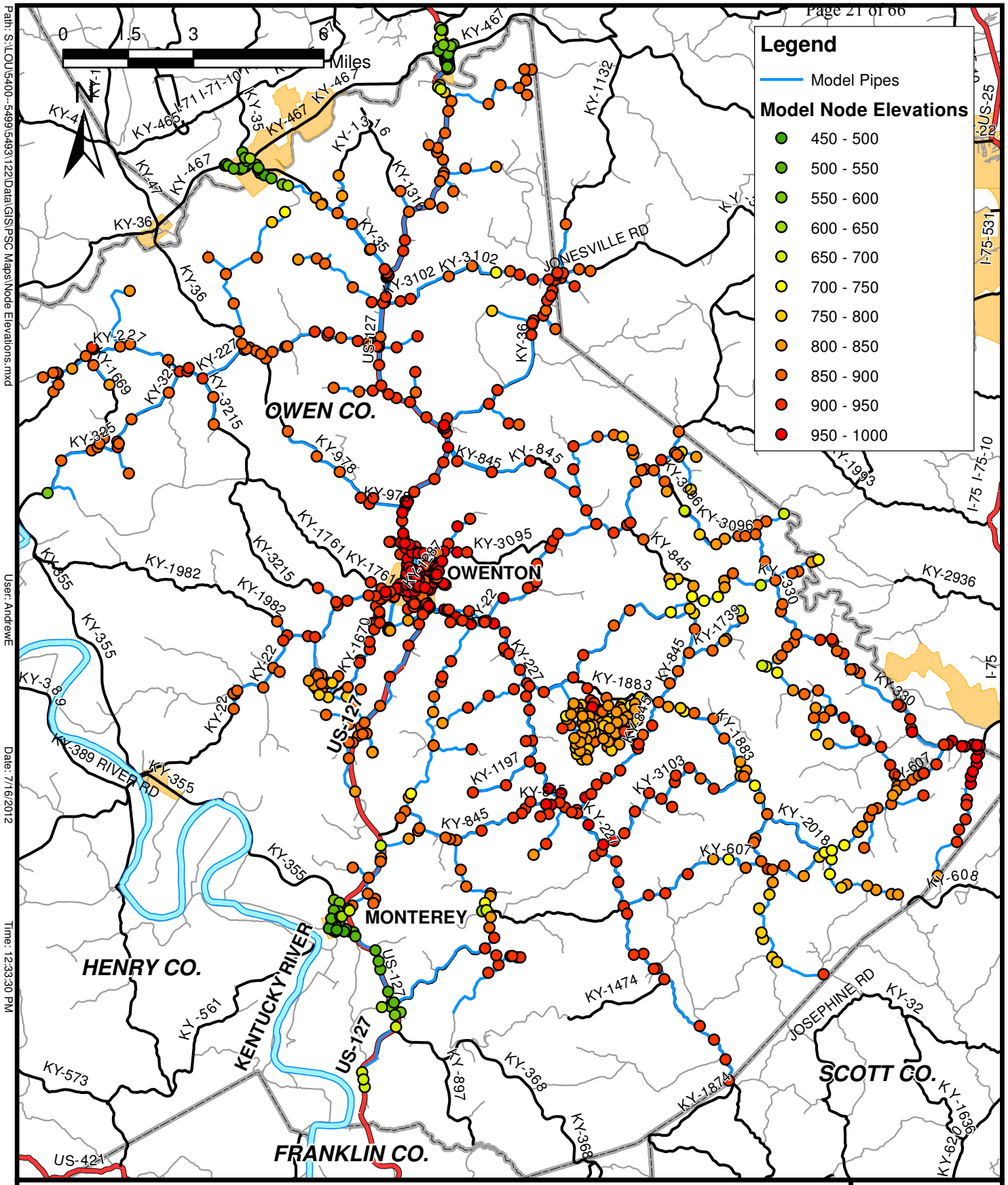

Path: S:\LOU\5400--5499\5493\122\Data\GIS\PSC Maps\Node Elevations.mxd
User: AndrewE
Date: 7/16/2012
Time: 12:33:30 PM

NORTHERN DIVISION MODEL NODE ELEVATIONS

KENTUCKY AMERICAN WATER
LEXINGTON, KENTUCKY

STRAND ASSOCIATES®

5493.122

Northern Division KYPipe Model Pipe Information

Name	Node1	Node2	Length	Diameter	Roughness
Carroll Co WD1	J-483	MM-CC	2059.38	8	112
P-1	OPL		7346.79	6	113
P-10	J-1015		1987.72	6	140
P-100	J-5		2178.48	8	134
P-1000	J-961	J-963	83.59	42	130
P-1001	J-961	Woodlake#2	152.38	42	130
P-1002	Woodlake#2	J-960	147.51	42	130
P-1003	J-957	Woodlake#3	155.26	42	130
P-1009	Woodlake#3	J-959	145.89	42	130
P-101	J-297		1832.08	6	134
P-1012	J-963	Woodlake#1	152.38	42	130
P-1015	J-981	KRS2 HS#1	224	20	130
P-1016	KRS2 HS#1	J-983	20	12	130
P-102	J-172		9088.86	6	96
P-1020	J-968	KRS2 Pool 3	376.23	42	130
P-1021	J-968	J-971	234.45	42	130
P-1022	J-976	KRS2 HS#3	249.64	20	130
P-1023	J-976	J-978	190.91	42	130
P-1024	J-978	KRS2 HS#2	234.24	20	130
P-1025	J-978	J-981	211.24	42	130
P-1026	J-977	J-973	195.48	42	130
P-1028	J-973	J-982	169.47	42	130
P-103	J-24		773.14	6	137
P-1030	KRS2 HS#3	J-973	20	12	130
P-1031	KRS2 HS#2	J-977	20	12	130
P-1032	J-967	-36	5093.81	42	130
P-1033	J-971	J-976	172.53	42	130
P-1034	J-971	KRS2 HS#4	237.28	20	130
P-1036	KRS2 HS#4	J-982	20	12	130
P-1037	J-975	-47	1683.16	42	130
P-1038	J-983	J-977	195.19	42	130
P-1039	J-984	-48	3406.24	42	130
P-104	J-27		2291.52	6	137
P-1040	J-985	-50	22538.12	42	130
P-1041	J-987	-101	17279.29	42	130
P-1042	J-988	-130	1126.44	42	130
P-1043	J-990	-129	157.77	42	130
P-1044	J-991	-131	1081.1	42	130
P-1045	J-992	CV-9	87.16	42	130
P-1047	Woodlake Tank#1	CV-14	120.84	42	130
P-105	J-27	J-306	945.39	3	137
P-106	J-28	J-622	240.99	6	118
P-107	J-28		1540.84	6	118
P-108	J-620	J-323	437.43	6	118
P-109	J-31	J-682	566.7	4	118
P-11	J-1029		3894.97	6	140
P-110	J-33		1683.89	4	137
P-111	J-34		2997.99	4	139
P-1118	J-1046	-1	15561.54	42	130
P-1119	J-983	J-1046	1235.02	42	130
P-112	J-299		1018.94	8	139
P-113	J-36		889.44	4	112

Northern Division KYPipe Model Pipe Information

Name	Node1	Node2	Length	Diameter	Roughness
P-114	J-37		5051.74	3	112
P-115	J-38		1527.43	6	140
P-116	J-39		2922.18	6	140
P-117	J-40		6429.44	6	140
P-118	J-41		2392.85	6	140
P-119	J-42		2225.31	6	140
P-12	J-100		1149.11	4	96
P-120	J-43		8498.56	6	140
P-121	J-44		975.19	6	137
P-122	J-45		2164.67	6	137
P-123	J-46		4069.06	6	140
P-124	J-47		2088.49	6	140
P-125	J-48		2977.48	6	140
P-126	J-49		1745.41	6	137
P-127	J-50		2649.1	6	137
P-128	J-51		1348.36	4	137
P-129	J-52		1002.53	4	137
P-13	J-1025		2973.37	6	140
P-130	J-53		2957.83	4	139
P-131	J-54		2693.33	4	139
P-132	J-55		8293.2	6	139
P-133	J-56		1844.07	6	139
P-134	J-57	J-668	356.16	6	139
P-135	J-58		4274.99	8	139
P-136	J-59	J-60	438.97	8	139
P-137	J-60		1932.99	8	139
P-138	J-767	New Columbus Pump	47.4	8	113
P-139	J-62		4561.58	6	140
P-14	J-1015		6919.5	6	113
P-140	J-63		4294.97	6	140
P-141	J-64		3526.6	6	140
P-142	J-65		1717.89	6	140
P-143	J-66	J-671	589.26	6	137
P-144	J-67		3318.25	6	137
P-145	J-68		4731.99	6	118
P-146	J-69		2007.46	6	118
P-147	J-70		2411.22	6	118
P-148	J-30	J-677	526.02	6	118
P-149	J-72		3891.09	4	118
P-15	J-1007		5000.8	4	113
P-150	J-61		3512.64	4	134
P-151	J-74	J-85	492.95	4	134
P-152	J-7	AV-2	140.77867	6	112
P-153	J-75		1615.29	4	134
P-154	J-76		2789.67	4	134
P-155	J-76	J-80	309.1	3	134
P-156	J-77		4575.78	3	134
P-157	J-77		2308.52	3	134
P-158	J-79		2551.92	4	134
P-159	J-79		2198.35	4	134
P-16	J-1007		1304.03	6	113
P-160	J-81		3920.22	4	134

Northern Division KYPipe Model Pipe Information

Name	Node1	Node2	Length	Diameter	Roughness
P-161	J-81		3059.71	3	134
P-162	J-84	J-651	490.79	4	134
P-163	J-75		1965.53	3	134
P-164	J-309	J-310	176.72	4	137
P-165	J-83		1551.23	4	134
P-166	J-85		5446.48	4	134
P-167	J-86		3854.85	6	137
P-168	J-87		3246.22	6	137
P-169	J-88		1834.26	8	139
P-17	J-1005		2153.19	6	113
P-170	J-89	J-766	1040.69	8	134
P-171	J-25	J-273	82.38	8	112
P-172	J-91		1936.05	4	134
P-173	J-92	J-756	687.29	4	134
P-174	J-93		2430.87	4	134
P-175	J-94		2176.77	4	134
P-176	J-95	J-639	636.03	4	134
P-177	J-97		1893.44	4	134
P-178	J-96		5035.45	4	134
P-179	J-98		2682.38	4	134
P-18	J-176	J-456	383.51	4	140
P-180	J-99		3271.73	3	134
P-181	J-358	J-19	456.63	8	139
P-182	J-102		3048.75	6	137
P-183	J-103		4561.13	6	137
P-184	J-70	J-104	1124.44	3	118
P-185	J-69		2545.2	3	118
P-186	J-106		668.63	6	118
P-187	J-154		4081.69	3	112
P-188	J-147	J-580	728.47	6	112
P-189	J-107	J-175	2182.98	3	96
P-19	J-1017	J-1026	1518.51	6	140
P-190	J-107		2425.72	3	96
P-191	J-109	J-621	441.13	6	96
P-192	J-109		3533.55	6	96
P-193	J-111		1451.93	6	96
P-194	J-111		5273.05	6	96
P-195	J-114	V-2	986.58	6	112
P-196	J-480		2808.55	6	112
P-197	J-108		1661.08	4	96
P-198	J-115		2470.76	4	96
P-199	J-115		398.9	4	96
P-2	J-1003		8559.46	8	140
P-20	J-1028		6920.39	4	140
P-200	J-108		2822.99	3	96
P-201	J-118		2738.18	4	96
P-202	J-118		2725.3	3	96
P-203	J-119		3111.17	4	96
P-204	J-119		1648.9	2	96
P-205	J-121	J-624	689.52	4	96
P-206	J-121		1991.48	4	96
P-207	J-173		5241.3	4	112

Northern Division KYPipe Model Pipe Information

Name	Node1	Node2	Length	Diameter	Roughness
P-208	J-624		2666	6	96
P-209	J-123		2183.26	3	96
P-21	J-1018		3392.13	6	113
P-210	J-123	V-1	936.61	3	112
P-211	J-127	J-565	813.81	3	112
P-212	J-127		6283.11	6	112
P-213	J-130		2163.91	6	112
P-214	J-130		2624.09	3	112
P-215	J-132	J-129	210.31	6	112
P-216	J-134	Pump-1	250	14	134
P-217	J-133		2268.77	6	112
P-218	J-133		1432.03	2	112
P-219	J-136		1997.67	6	112
P-22	J-307	J-236	213.55	6	112
P-220	J-136		2906.25	3	112
P-221	J-137		4872.32	4	112
P-222	J-137	J-36	499.06	4	112
P-223	J-140		3267.86	3	112
P-224	J-140	J-556	285.68	4	112
P-225	J-141		2543.51	6	96
P-226	J-141		2971.23	3	96
P-227	J-143		494.59	6	112
P-228	J-143		4383	3	139
P-229	J-146		3468.35	3	139
P-23	J-1027		490.71	6	113
P-230	J-506		2946.63	2	140
P-231	J-147	MM-ON	457	6	112
P-232	J-214		1393.16	6	112
P-233	J-150		1769.62	6	96
P-234	J-150		6407.94	4	96
P-235	J-152	J-153	638.58	6	96
P-236	J-150		2017.24	2	96
P-237	J-153	J-200	2470.38	6	96
P-238	J-153	J-761	215.18	6	96
P-239	J-155	J-207	653.31	4	96
P-24	J-328	J-573	1186	2	112
P-240	J-155		746.09	4	96
P-241	J-158	J-692	137.26	4	96
P-242	J-158		5248.62	3	96
P-243	J-159		2011.61	6	96
P-244	J-159		4843.98	3	96
P-245	J-161		3668.53	4	112
P-246	J-161		9675.88	2	112
P-247	J-362		1933.37	8	139
P-248	J-164	Wheatley Tank	431	6	112
P-249	J-165		5781.85	6	96
P-25	J-1012		4425.92	6	113
P-250	J-165	J-761	1154.73	6	96
P-251	J-123	J-486	311.89	6	96
P-252	J-166		9969.69	4	127
P-253	J-166		3424.53	6	96
P-254	J-323	AV-3	179.77	6	118

Northern Division KYPipe Model Pipe Information

Name	Node1	Node2	Length	Diameter	Roughness
P-255	J-198		1260.1	4	127
P-256	J-167	J-168	67	6	96
P-257	Bromley Tank	J-780	101	6	96
P-258	J-170	J-171	74.96	6	96
P-259	J-483	J-169	1042.43	6	112
P-26	New Columbus	J-400	115.61	6	113
P-260	J-124		3627	4	127
P-261	J-171	J-109	63.51	6	96
P-262	J-174		1320.6	3	112
P-263	J-621		3001.34	3	96
P-264	J-280		4200.11	3	96
P-265	J-177		1388.71	2	96
P-266	J-178	J-179	418.72	6	96
P-267	J-179	J-530	154.85	6	96
P-268	J-179	J-535	266.55	6	96
P-269	RV-2		1578.49	4	96
P-27	J-474		1974.5	1.5	112
P-270	J-182	J-413	1315.52	6	96
P-271	J-116		3893.02	3	96
P-272	J-112	J-520	141.85	6	112
P-273	J-112	H-3	298.47	6	112
P-274	J-186	H-9	1208.83	6	112
P-275	J-186	J-465	218.91	6	112
P-276	J-188	H-10	636.43	6	112
P-277	J-188	J-190	166.01	6	112
P-278	J-190	J-189	187.74	6	112
P-279	J-190	J-459	704.79	6	112
P-28	J-1019		1864.79	8	140
P-280	J-192		2996.58	4	96
P-281	J-193		2565.36	2	96
P-282	J-194	J-793	521.04	6	96
P-283	J-194	H-81	324.32	6	96
P-284	J-196	H-80	166.61	6	96
P-285	J-196		927.89	6	96
P-286	J-199		4416.44	3	112
P-287	J-199		3268.7	3	112
P-288	J-200		2724.58	6	96
P-289	J-202	J-758	1035.92	6	96
P-29	J-1030		2789.6	4	140
P-290	J-203		1738.86	6	96
P-291	J-203		1580.66	3	96
P-292	J-204		2516.83	2	96
P-293	J-206		1254.39	4	96
P-294	J-207	J-686	259.44	3	96
P-295	J-208		2056.42	2	96
P-296	J-208		6363.96	2	96
P-297	J-207		2619.5	2	96
P-298	J-209	J-688	714.63	4	96
P-299	J-209	J-212	2202.59	2	96
P-3	J-1003		5575.68	4	140
P-30	J-1002		9205.61	8	140
P-300	J-213		5166.87	2	96

Northern Division KYPipe Model Pipe Information

Name	Node1	Node2	Length	Diameter	Roughness
P-301	J-580	J-439	656	6	112
P-302	J-215	J-421	758.42	6	112
P-303	J-215	H-29	72.16	12	134
P-304	J-218		737.67	6	112
P-305	J-218	H-26	529.86	6	112
P-306	J-219		870.11	6	112
P-307	J-219	J-428	594.32	6	112
P-308	J-223	J-441	299.91	6	112
P-309	J-224	H-40	87.77	6	112
P-31	J-1023	J-1003	909.46	8	140
P-310	J-224	J-591	104.56	6	112
P-311	J-225	H-52	372.29	6	112
P-312	J-224		805.46	4	112
P-313	J-228	J-594	118.45	6	112
P-314	J-228	J-229	74.93	4	112
P-315	J-229	J-230	252.47	4	112
P-316	J-229	H-46	579.03	6	112
P-317	J-232	J-433	91.79	6	112
P-318	J-232	H-44	407.36	6	112
P-319	J-231	J-234	405.46	6	112
P-32	J-749	J-292	396.69	4	140
P-320	J-234	H-59	603.19	8	112
P-321	J-234	J-512	203.4	8	112
P-322	J-262	J-423	467.22	4	112
P-323	J-236	J-772	26.16	8	112
P-324	J-238	H-50	392.65	6	112
P-325	J-233	H-49	504.26	6	112
P-326	J-239	J-597	112.04	2	112
P-327	J-241	J-249	244.69	8	112
P-328	J-240	H-56	160.55	6	112
P-329	J-240	J-443	371.56	6	112
P-33	J-1001		6092.08	8	140
P-330	J-240	J-242	255.3	6	112
P-331	J-242	H-53	225.93	4	112
P-332	J-242	J-225	240.84	6	112
P-333	J-225	J-244	916.31	4	112
P-334	J-226	J-274	65.44	6	112
P-335	J-248	J-603	385.93	2	112
P-336	J-246		494.39	6	112
P-337	J-247		1118.4	2	112
P-338	J-603	H-72	362.99	4	112
P-339	J-249	H-57	60.85	8	112
P-34	J-750	J-492	1544.73	6	112
P-340	J-249	J-263	381.49	6	112
P-341	J-250		433.49	1	112
P-342	J-251	J-252	394.83	4	112
P-343	J-253		490.47	12	134
P-344	J-252	H-37	549.34	4	112
P-345	J-255	J-254	476.35	2	112
P-346	J-237	J-227	310.51	6	112
P-347	J-257	J-255	425.75	2	112
P-348	J-227	J-585	124.54	6	112

Northern Division KYPipe Model Pipe Information

Name	Node1	Node2	Length	Diameter	Roughness
P-349	J-256	H-34	230.41	6	112
P-35	J-751	J-143	770.59	6	112
P-350	J-259		201.17	6	112
P-351	J-260	J-257	1499.22	2	112
P-352	J-227		1105.6	4	112
P-353	J-261	H-39	235.14	4	112
P-354	J-262	H-69	341.59	6	112
P-355	J-262	J-307	172.3	6	112
P-356	J-263	H-35	214.89	4	112
P-357	J-264	J-262	253.16	4	112
P-358	J-263	J-265	229.11	2	112
P-359	J-263	J-267	240.03	6	112
P-36	J-752	J-529	1100.36	3	96
P-360	J-267	H-68	184.16	6	112
P-361	J-264	J-268	173.1	2	112
P-362	J-267	J-600	101.52	2	112
P-363	J-250	J-253	226.71	2	112
P-364	J-269		481.45	4	112
P-365	J-271	J-261	346.82	4	112
P-366	J-271	J-270	285.23	6	112
P-367	J-270	J-272	177.31	6	112
P-368	J-273	J-601	132.97	6	112
P-369	J-274	H-73	334.4	6	112
P-37	J-753	J-562	251.96	3	112
P-370	J-274		1396.4	2	112
P-371	J-472		1095.23	6	112
P-372	J-276	H-74	251.58	6	112
P-373	J-275	H-65	1125.13	8	112
P-374	J-235		593.63	8	112
P-375	J-279	J-241	425.71	8	112
P-376	J-279	J-281	322.88	4	112
P-377	J-281	H-67	469.72	4	112
P-378	J-281	H-66	292.68	4	112
P-379	J-284	J-500	1003.22	6	112
P-38	J-754		1100.59	3	112
P-380	J-284	J-285	3819.67	8	134
P-381	J-286	J-293	83.49	8	112
P-382	J-479	J-285	124.18	8	134
P-383	J-286		5115.05	12	134
P-384	J-287		1347.19	6	96
P-385	J-285	J-473	2495.91	8	134
P-386	J-451		851.01	6	140
P-387	J-289	J-284	77.99	8	134
P-388	J-290	J-479	154.8	12	134
P-389	J-290		1339.33	4	140
P-39	J-1000		3199.68	6	140
P-390	J-292	J-291	416.05	4	140
P-391	J-292	H-63	1126.4	4	140
P-392	J-289	H-13	871.81	4	112
P-393	J-293		1056.71	8	134
P-394	J-422	J-500	637.8	6	140
P-395	J-295		434.66	2	112

Northern Division KYPipe Model Pipe Information

Name	Node1	Node2	Length	Diameter	Roughness
P-396	J-273	H-77	2050.58	4	112
P-397	J-297		5312.67	4	134
P-398	J-298		1049.35	8	139
P-399	J-363	J-150	337.69	6	96
P-4	J-1018	J-737	713.64	8	140
P-40	J-2001		2262	6	140
P-400	J-64		1741.18	3	140
P-401	J-300	J-302	604.45	4	137
P-402	J-300		1130.16	4	137
P-403	J-302		1985.75	4	137
P-404	J-302		1646.72	4	137
P-405	J-304		5033.42	6	137
P-406	J-304	J-67	351.35	6	137
P-407	J-104		626.04	3	118
P-408	J-321		1355.21	6	118
P-409	J-619	J-316	237.12	6	118
P-41	J-755	J-1016	1400.43	6	140
P-410	J-309		540.65	4	137
P-411	J-310		1168.85	4	137
P-412	J-310		1913.63	4	137
P-413	J-310		1118.55	4	137
P-414	J-32		1497.33	4	137
P-415	J-71	H-17	395.04	6	118
P-416	J-321	J-620	296.62	6	118
P-417	J-314	J-619	113.41	6	118
P-418	J-619	J-617	694.31	8	118
P-419	J-620		532.39	4	118
P-42	J-409	J-426	628.34	12	134
P-420	J-622	H-78	638.65	6	118
P-421	J-316	J-325	477.38	6	118
P-422	J-319	H-16	742.41	6	118
P-423	J-28	H-14	279.49	6	118
P-424	J-318	J-314	267.93	6	118
P-425	J-318	H-18	58.65	4	118
P-426	J-768		1866.97	6	113
P-427	J-781		7413.88	6	137
P-428	J-764		614.23	8	118
P-429	J-325	J-674	193.51	6	118
P-43	New Columbus Pump	J-768	49.66	6	113
P-430	RV-1	J-326	206.41	6	118
P-431	J-326	J-321	1245.19	6	118
P-432	J-326	J-327	1315.65	6	118
P-433	J-26		7409.14	6	137
P-434	J-58		865.72	4	139
P-435	J-767		179.55	6	113
P-436	J-278		3033.94	6	96
P-437	J-331		4364.41	4	96
P-438	J-332		1196.98	4	96
P-439	J-288	J-449	290.38	2	140
P-44	J-756		1963.94	4	134
P-440	J-334		2727.98	2	140
P-441	J-334		2722.55	2	140

Northern Division KYPipe Model Pipe Information

Name	Node1	Node2	Length	Diameter	Roughness
P-442	J-335		711.82	6	140
P-443	J-335	J-475	143.39	6	140
P-444	J-337		1330.7	4	140
P-445	J-339		911.47	2	96
P-446	J-338	J-339	237.88	4	96
P-447	J-338		671.58	2	96
P-448	J-340	J-496	270.79	4	96
P-449	J-340		789.17	4	96
P-45	J-757		5848.22	6	137
P-450	J-343	J-347	135.12	4	96
P-451	J-343	J-344	1220.14	4	96
P-452	J-345	J-495	337.83	4	96
P-453	J-345	J-346	1204.64	4	96
P-454	J-347		319.32	4	96
P-455	J-347		1735.8	4	96
P-456	J-345		794.27	4	96
P-457	J-349		854.04	4	96
P-458	J-352		4524.7	4	96
P-459	J-352		3482.37	4	96
P-46	J-758		1402.8	6	96
P-460	J-351		1922.3	4	96
P-461	J-351	J-354	216.24	4	96
P-462	J-355		839.78	4	96
P-463	J-355		2104.37	2	96
P-464	J-356		2874.09	3	134
P-465	J-358		6217.04	6	137
P-466	J-359		5100.96	4	118
P-467	J-361		3148.88	6	137
P-468	Learning Oak MM	CV-3	10	6	113
P-469	Rockdale MM	CV-2	50	8	140
P-47	J-1022		6308.1	8	140
P-470	J-362	J-794	850	8	139
P-471	J-365		964.6	4	118
P-472	J-366		799.84	4	118
P-473	J-368		426.62	4	118
P-474	J-365	J-380	520.54	4	118
P-475	J-367		451.69	4	118
P-476	J-369		404.46	4	118
P-477	J-369		1621.24	4	118
P-478	J-370		1605.71	4	118
P-479	J-370	J-383	365.39	4	118
P-48	AV-1	Bromley Tank	161	6	96
P-480	J-373	J-390	349.32	4	118
P-481	J-373	J-519	361.48	4	118
P-482	J-374		314.59	4	118
P-483	J-374	J-604	669.67	4	118
P-484	J-376		468.81	4	118
P-485	J-378		648.15	4	118
P-486	J-379		1211.85	4	118
P-487	J-380		784.83	4	118
P-488	J-380	J-381	565.01	2	118
P-489	J-381	J-382	1176.17	2	118

Northern Division KYPipe Model Pipe Information

Name	Node1	Node2	Length	Diameter	Roughness
P-49	J-761	J-795	311.02	6	96
P-490	J-381		2684.76	2	118
P-491	J-383		2250.35	4	118
P-492	J-383		1413.65	2	118
P-493	J-384		516.73	4	118
P-494	J-384	J-386	322.51	2	118
P-495	J-387		638.81	4	118
P-496	J-387		1404.61	2	118
P-497	J-389	J-387	405.97	4	118
P-498	J-388	J-389	1007.57	2	118
P-499	J-390		1208.33	4	118
P-5	J-175	J-529	1083.61	3	96
P-50	J-1018		1232	8	140
P-500	J-390	J-391	649.63	2	118
P-501	J-392		801.84	4	118
P-502	J-392		906.05	2	118
P-503	J-394		1026.54	4	118
P-504	J-393		243.98	4	118
P-505	J-395	J-397	1056.73	4	118
P-506	J-395		1546.82	2	118
P-507	J-396	J-374	493.39	4	118
P-508	J-397	J-396	382.52	4	118
P-509	J-399	J-377	637.11	2	118
P-51	J-1012		4047.92	6	113
P-510	J-377	J-396	646.86	2	118
P-511	J-398	J-397	1141.26	2	118
P-512	J-400		1506.71	6	113
P-513	J-401		3864.24	6	113
P-514	J-402	H-89	216.13	6	113
P-515	J-402		4683.52	4	113
P-516	J-403		4728.51	6	113
P-517	J-403	J-405	165.63	3	113
P-518	J-405		1973.5	3	113
P-519	J-405		1275.76	3	113
P-52	J-764	Monterey Tank	122.19	8	118
P-520	J-408		2396.77	3	113
P-521	J-408		1265.27	3	113
P-522	J-409	Fairgrounds	398.47	6	112
P-523	J-425		83.31	8	112
P-524	J-411		1317.28	2	96
P-525	J-412		857.03	2	96
P-526	J-413		3661.36	6	96
P-527	J-414	J-115	719.42	4	96
P-528	J-415		550.39	4	96
P-529	J-416		2724.77	4	96
P-53	J-129		1389.66	6	112
P-530	J-417		1234.73	4	96
P-531	J-264		341.92	2	112
P-532	J-419	J-438	376.06	6	112
P-533	J-420	J-223	292.98	6	112
P-534	J-421	H-2	372.15	6	112
P-535	J-422	H-64	584.56	6	140

Northern Division KYPipe Model Pipe Information

Name	Node1	Node2	Length	Diameter	Roughness
P-536	J-423	H-36	165.61	4	112
P-537	J-583	H-33	1260.65	6	112
P-538	J-425		519.76	6	112
P-539	J-426		482.92	12	134
P-54	J-517	J-796	261.54	6	140
P-540	J-427	H-48	217.31	6	112
P-541	J-428	H-30	947.19	6	112
P-542	J-429	J-437	246.81	6	112
P-543	J-430	H-54	322.3	8	112
P-544	J-431	J-270	331.75	4	112
P-545	J-432	J-246	159.89	6	112
P-546	J-433	H-45	635.19	6	112
P-547	J-434	H-70	268.03	6	112
P-548	J-435	J-231	336.27	6	112
P-549	J-436	J-236	246.3	8	112
P-55	J-759		1154.44	6	134
P-550	J-437	J-241	179.8	6	112
P-551	J-438	J-246	239.89	6	112
P-552	J-439	J-219	687.39	6	112
P-553	J-440		527.84	2	112
P-554	J-441		798.52	6	112
P-555	J-442	H-47	289.51	6	112
P-556	J-443	H-55	416.88	6	112
P-557	J-444	J-332	665.03	4	96
P-558	J-445		1044.68	4	96
P-559	J-446		2690.1	4	96
P-56	J-762		2464.35	8	112
P-560	J-447		1520.24	6	140
P-561	J-448		1177.78	2	140
P-562	J-449		3363.69	2	140
P-563	J-450		1115.32	6	140
P-564	J-451		1636.5	8	140
P-565	J-452		1827.17	8	140
P-566	J-453		3230.54	2	140
P-567	J-454		3441.11	4	96
P-568	J-455	J-256	92.73	4	112
P-569	J-456		824.13	4	140
P-57	J-762	J-759	208.96	8	134
P-570	J-457		946.54	8	140
P-571	J-187	H-20	656.42	6	112
P-572	J-458	J-191	484.67	6	112
P-573	J-459	J-191	179.59	6	112
P-574	J-459	J-524	282.2	6	112
P-575	J-189	J-528	232.45	6	112
P-576	J-462		1278.42	6	112
P-577	J-462		888.16	2	112
P-578	J-463	J-462	78.72	6	112
P-579	J-463		1835.25	2	112
P-58	J-638	J-765	896.96	4	134
P-580	J-465	J-188	118.87	6	112
P-581	J-465	J-467	573.26	2	112
P-582	J-468	H-6	946.67	6	112

Northern Division KYPipe Model Pipe Information

Name	Node1	Node2	Length	Diameter	Roughness
P-583	J-468	J-469	204.68	3	112
P-584	J-470	H-5	335.58	6	112
P-585	J-470	J-471	172.03	2	112
P-586	J-472	J-276	101.79	6	112
P-587	J-473	J-287	1909.75	8	134
P-588	J-769	V-4	263.19	6	112
P-589	J-475		685.08	6	140
P-59	J-1005		4111.41	6	113
P-590	J-476		951.88	6	140
P-591	J-601	J-472	293.69	6	112
P-592	J-477		1516.35	2	96
P-593	J-478		1046.44	4	118
P-594	J-424	J-217	633.03	12	134
P-595	J-479	J-134	80.35541	12	134
P-596	Pump-1	R-1	210.45	16	134
P-597	RV-3	MM-GC	100	6	112
P-598	J-460		220.53	6	112
P-599	J-480	Glencoe Tank	333.66	6	112
P-6	J-1022	J-740	944.9	8	140
P-60	OTL		4430	6	113
P-600	J-481	J-538	766.65115	6	96
P-601	J-197	J-482	190.4	6	96
P-602	J-197	H-22	158	6	96
P-603	J-481	H-23	114.86	6	96
P-604	RV-2	J-525	899.16	4	96
P-605	J-487		2042.73	4	96
P-606	J-487	J-488	1141.86	4	96
P-607	J-445	J-515	568.23	1	96
P-608	J-489		2481.13	1	96
P-609	J-446	J-491	911.97	2	96
P-61	OPL		7698	6	113
P-610	J-492	J-751	999.6	6	112
P-611	J-493		2954.93	6	96
P-612	J-494		1599.06	6	96
P-613	J-495	J-343	379.02	4	96
P-614	J-496		358.05	4	96
P-615	J-497	J-351	518.04	4	96
P-616	J-498		3746.39	4	96
P-617	J-499		2747.5	6	140
P-618	J-275	J-273	95.89	8	112
P-619	J-501		2786.17	4	96
P-62	J-766	J-762	1425.71	8	134
P-620	J-502		4694.31	6	96
P-621	J-503		1283.28	3	139
P-622	J-503	J-504	830.02	3	139
P-623	J-505		5415.09	4	140
P-624	J-505	J-506	424.31	2	140
P-625	J-507		707.18	6	140
P-626	J-508	J-260	102.09	4	112
P-627	J-332	J-510	1491.8	2	96
P-628	J-510		3278.67	2	96
P-629	J-511	J-232	221.01	6	112

Northern Division KYPipe Model Pipe Information

Name	Node1	Node2	Length	Diameter	Roughness
P-63	J-2000		3634	6	140
P-630	J-512	H-58	278.07	8	112
P-631	J-513		2234.95	4	96
P-632	J-513	J-514	482.56	4	96
P-633	J-515	J-489	497.43	1	96
P-634	J-516	J-226	365.5	6	112
P-635	J-517	J-763	2279.88	6	118
P-636	J-519	J-607	381.66	4	118
P-637	J-519	J-763	126.84	6	118
P-638	J-520	J-523	117.8	6	112
P-639	J-521	H-8	248.67	6	112
P-64	J-5	J-644	152.38	8	134
P-640	J-522	H-7	545.99	6	112
P-641	J-523	J-470	364.97	6	112
P-642	J-525	H-83	600.41	6	96
P-643	J-524	H-21	593.23	6	112
P-644	J-528	J-463	270.62	6	112
P-645	J-527	H-4	293.5	6	112
P-646	J-526	H-11	367.19	6	112
P-647	J-770		1398.2	6	96
P-648	J-530	J-196	1339.29	6	96
P-649	J-531		2749.44	3	96
P-65	J-1034		4336.82	6	113
P-650	J-532	J-197	230.2321	6	96
P-651	J-533	J-481	273.97	6	96
P-652	J-534	H-82	423.86	6	96
P-653	J-535		434.46	6	96
P-654	J-536		2299.08	3	112
P-655	J-537		2210.29	4	96
P-656	J-539		8175	3	96
P-657	J-538	J-532	753.11675	6	96
P-658	J-540		811.56	6	96
P-659	J-541		5763.92	3	112
P-66	J-517		6318.63	6	140
P-660	J-411		1343.38	2	96
P-661	J-543		3323.6	3	112
P-662	J-544		1975.7	6	112
P-663	J-545		1256.07	4	112
P-664	J-546		3273.86	3	112
P-665	J-547		3424.43	4	112
P-666	J-548	V-5	445.13	3	112
P-667	J-549	J-552	419.69	3	112
P-668	J-549	J-550	395.6	2	112
P-669	J-551	H-86	265	3	112
P-67	J-1033		5184.98	6	113
P-670	J-552	H-84	736.3	3	112
P-671	J-553		1757.94	3	112
P-672	J-553	J-554	388.59	3	112
P-673	J-555		3638.55	4	112
P-674	J-556	J-555	471.37	4	112
P-675	J-132	J-557	375.99	4	112
P-676	J-558	J-133	1276.1	4	112

Northern Division KYPipe Model Pipe Information

Name	Node1	Node2	Length	Diameter	Roughness
P-677	J-558	J-559	272.17	2	112
P-678	J-560		3076.72	2	112
P-679	J-561		4000.57	3	112
P-68	J-644	J-61	265.66	8	139
P-680	J-562		1713.88	3	112
P-681	J-563		2146.7	3	112
P-682	J-564		1672.69	3	112
P-683	J-565		1534.72	3	112
P-684	J-566		3610.58	3	112
P-685	J-101		3075.44	4	134
P-686	J-23		1238.43	3	134
P-687	J-80	J-77	359.67	3	134
P-688	J-80	J-569	680.45	3	134
P-689	J-216		1714.85	6	112
P-69	J-1000		1353.28	6	140
P-690	J-571		1349.65	3	112
P-691	J-571	J-572	778.32	6	112
P-692	J-571		1607.91	2	112
P-693	J-570		2470.61	1.5	112
P-694	J-426	J-574	724.59	6	112
P-695	J-576	J-215	2289.62	12	134
P-696	J-576	J-577	745.96	2	112
P-697	J-409		1636.52	12	134
P-698	J-214	J-580	465.91	6	112
P-699	J-1046	-133	7350.27	16	130
P-7	J-1014		3028.31	6	113
P-70	J-24		3797.13	6	137
P-700	J-574	H-25	313.93	6	112
P-701	J-222	J-250	238.3	2	112
P-702	J-579	J-425	35.03	8	112
P-703	J-579	V-7	235.54	4	112
P-704	J-584	J-695	253.13	12	134
P-705	J-424		109.27	6	112
P-706	J-586	J-583	32.72	6	112
P-707	J-585		1084.63	4	112
P-708	J-585	J-587	166.21	6	112
P-709	J-254	J-588	553.94	2	112
P-71	J-1		4149.05	6	140
P-710	J-508	J-589	1064.78	1	112
P-711	J-590	J-222	359.93	2	112
P-712	J-591	H-51	253.54	6	112
P-713	J-591		2206.82	8	112
P-714	J-593		517.19	6	112
P-715	J-594	J-223	57.55	6	112
P-716	J-593	J-592	387.53	6	112
P-717	J-420		307.4	2	112
P-718	J-595	J-430	104.84	8	112
P-719	J-597	J-595	255.39	2	112
P-72	J-2		1861.37	6	140
P-720	J-597	J-598	254.81	2	112
P-721	J-437	J-599	248.69	2	112
P-722	J-368		624.46	4	118

Northern Division KYPipe Model Pipe Information

Name	Node1	Node2	Length	Diameter	Roughness
P-723	J-22		1447.13	4	118
P-724	RV-4	J-22	149.22	4	118
P-725	J-604	J-377	423.86	4	118
P-726	J-605		852.44	4	118
P-727	J-605		1061.93	4	118
P-728	J-606		748.91	4	118
P-729	J-372	J-606	323.32	2	118
P-73	J-1025		2900.08	6	140
P-730	J-607		613.14	4	118
P-731	J-607	J-608	500.25	2	118
P-732	J-609		2040.1	4	118
P-733	J-609		1802.04	2	118
P-734	J-611		692.21	2	118
P-735	J-611		451.27	2	118
P-736	J-612		667.09	2	118
P-737	J-612		633.19	2	118
P-738	J-614	J-22	525.6	4	118
P-739	J-614		966.45	2	118
P-74	J-1000		2791.42	6	140
P-740	J-615	J-616	386.18	2	118
P-741	J-615		1517.9	2	118
P-742	J-621		3132.39	3	96
P-743	J-623		3816.55	4	96
P-744	J-486		5074.13	6	96
P-745	J-121		4277.21	4	96
P-746	J-625		1014.27	4	96
P-747	J-445		3403.64	1	96
P-748	J-444	J-626	2262.89	3	96
P-749	J-330		4845.06	6	137
P-75	J-1015		2516.56	4	113
P-750	J-280	J-180	670.97	3	96
P-751	J-629		4975.46	4	137
P-752	J-418	J-494	2295.25	6	96
P-753	J-630		5451.54	3	139
P-754	J-631		4172.6	3	139
P-755	J-632		4548.52	2	96
P-756	J-633		2301.37	6	96
P-757	J-634		2916.94	3	96
P-758	J-635		9168.22	4	127
P-759	J-636		3254.67	3	96
P-76	J-2		2110.24	6	140
P-760	J-637	J-646	453.47	6	134
P-761	J-638	J-637	486.57	6	134
P-762	J-639		692.63	4	134
P-763	J-640	J-648	372.69	4	134
P-764	J-642		2609.55	4	134
P-765	J-641	J-640	532.93	4	134
P-766	J-769		20	6	112
P-767	J-643		3698.14	4	134
P-768	J-646		1139.65	6	134
P-769	J-645	J-760	348.23	4	112
P-77	J-1022		4267.82	4	140

Northern Division KYPipe Model Pipe Information

Name	Node1	Node2	Length	Diameter	Roughness
P-770	J-648	J-96	1028.56	4	134
P-771	J-647		3474.62	3	134
P-772	J-649		1932.73	4	134
P-773	J-650	J-356	2024.77	4	134
P-774	J-651		1050.44	4	134
P-775	J-652		1774.64	6	140
P-776	J-653		3084.06	6	140
P-777	J-654		1920.5	6	140
P-778	J-655		2416.92	8	139
P-779	J-656	J-59	578.69	8	139
P-78	J-1015		3079	6	113
P-780	J-657		2991.74	8	139
P-781	J-658		1614.37	8	139
P-782	J-659		1426.35	8	139
P-783	J-660		1802.97	8	139
P-784	J-661		3388.19	6	140
P-785	J-662		2085.1	6	140
P-786	J-663		1690.44	6	140
P-787	J-664		3174.23	6	140
P-788	J-665		2225.44	6	139
P-789	J-666		1039.46	6	139
P-79	J-1019		4224.71	4	140
P-790	J-667		5588.31	6	139
P-791	J-668		3491.48	6	139
P-792	J-669		2582.94	6	140
P-793	J-670		3355.77	6	137
P-794	J-671		3360.5	6	137
P-795	J-672		3427.72	6	137
P-796	J-673		7494.56	4	137
P-797	J-674	J-319	186.71	6	118
P-798	J-315	J-676	836.24	4	137
P-799	J-676	J-675	946.08	4	137
P-8	J-1016	J-1017	1762.98	6	140
P-80	J-7		782.10359	6	112
P-800	J-676	J-675	946.08	4	137
P-801	J-677		1487.23	6	118
P-802	J-678		1040.84	4	118
P-803	J-679		1672	4	118
P-804	J-680		6654.13	6	137
P-805	J-681		2035.27	4	118
P-806	J-682		3048.44	4	118
P-807	J-683		1423.28	4	118
P-808	J-684		3702.48	4	127
P-809	J-685	J-694	257.87	4	96
P-81	J-35		2144.13	6	139
P-810	J-686	J-208	678	3	96
P-811	J-687		1315	4	96
P-812	J-688	J-690	1248.87	4	96
P-813	J-689	J-567	1379.85	2	96
P-814	J-690	J-685	454.34	4	96
P-815	J-691		2966.46	4	127
P-816	J-692	J-687	387.05	4	96

Northern Division KYPipe Model Pipe Information

Name	Node1	Node2	Length	Diameter	Roughness
P-817	J-693		1341.56	4	96
P-818	J-694	J-693	631.34	4	96
P-819	J-695	J-424	321	12	134
P-82	J-4	V-18	6358.36	6	139
P-820	J-696		7936.27	6	137
P-821	J-697		1313.25	4	118
P-822	J-698		1076.28	4	118
P-823	J-699		629.72	4	118
P-824	J-700		756.77	4	118
P-825	J-701		1454.63	4	118
P-826	J-702		1687.75	2	118
P-827	J-703		601.34	4	118
P-828	J-704		715.97	4	118
P-829	J-705		1071	4	118
P-83	J-2000	J-299	673.31	8	139
P-830	J-706		659.86	4	118
P-831	J-707		1704.91	2	118
P-832	J-708		856.49	4	118
P-833	J-709		919.76	4	118
P-834	J-710	J-375	588.1	4	118
P-835	J-711		942	4	118
P-836	J-712		678.82	4	118
P-837	J-713		624.22	4	118
P-838	J-714		523.9	4	118
P-839	J-715		574.13	4	118
P-84	J-8		820.93	6	139
P-840	J-716		938.65	4	118
P-841	J-717		1826.35	2	118
P-842	J-718		1065.68	4	118
P-843	J-719		1363.85	4	118
P-844	J-720		433.11	4	118
P-845	J-721		770.98	4	118
P-846	J-722		1554.18	6	140
P-847	J-723		2859.28	6	140
P-848	J-724		6190.31	6	113
P-849	J-725		3801.1	4	113
P-85	J-8		1022.21	3	139
P-850	J-726		2331.27	6	140
P-851	J-727		4816.76	6	113
P-852	J-728		3179.96	6	113
P-853	J-729		3094.09	4	140
P-854	J-730	J-360	275.78	6	137
P-855	J-731		1876.98	6	140
P-856	J-732		2074.5	6	113
P-857	J-733		10933.04	6	113
P-858	J-734	J-400	358.8	6	113
P-859	J-735		2546.69	6	113
P-86	J-9		3453.5	6	139
P-860	J-736		1150.68	8	140
P-861	J-737		1097.15	8	140
P-862	J-738	J-741	922.78	8	140
P-863	J-739	J-742	342.15	6	113

Northern Division KYPipe Model Pipe Information

Name	Node1	Node2	Length	Diameter	Roughness
P-864	J-740	J-1020	630.64	8	140
P-865	J-741		611.12	8	140
P-866	J-742		2032.53	6	113
P-867	J-743		1185.03	4	140
P-868	J-744		3359.79	4	140
P-869	J-745		5169.67	8	140
P-87	J-9	V-14	1813.62	6	140
P-870	J-746		2632.87	6	113
P-871	J-747	J-402	1086.29	6	113
P-872	Pump-2		20	6	96
P-873	J-548		620.54	6	112
P-874	J-771	J-563	1326.73	3	112
P-875	Pump-3		618.2	6	112
P-876	J-772		703.62	8	112
P-877	J-773		4727.5	4	96
P-878	J-15		7646.37	4	137
P-879	J-1		9774.24	6	140
P-88	J-11		3778.75	6	140
P-880	J-775		977.32	4	112
P-881	J-775		3763.63	4	112
P-882	J-776		3097.95	4	127
P-883	J-776		1223.78	4	127
P-884	J-360		2673.04	6	137
P-885	J-779	J-730	945.93	6	137
P-886	J-779		4048.88	6	137
P-887	J-312	V-6	594.61	6	137
P-888	RV-5	J-782	610.56	6	137
P-889	J-780	J-170	194.72661	6	96
P-89	J-12		937.26	8	139
P-890	J-782		3364.56	6	137
P-891	J-167	CV-4	126	6	96
P-892	J-783		3604.45	6	137
P-893	AV-2	Wheatley Tank	120.22133	6	112
P-894	AV-3	Monterey Tank	165.68	6	118
P-895	J-784		609.75	4	118
P-896	J-785		2042.8	4	118
P-897	J-786	V-13	246.76	6	140
P-898	J-152	J-787	195.8	2	96
P-899	J-788	J-253	536.64	12	134
P-9	J-1010	J-1011	523.4	6	113
P-90	J-12		7309.34	4	139
P-900	J-789	J-429	48.74	6	112
P-901	J-790	J-218	848.89	6	112
P-902	J-791	J-436	175.77	8	112
P-903	J-792		2200.59	6	113
P-904	J-797	J-786	87.19	6	140
P-905	J-798	J-576	141.41	12	134
P-906	New GST	J-818	123.37	16	130
P-907	New PS-2	J-821	0.38574	16	130
P-908	J-799	J-826	1410.36	16	130
P-909	J-800	-149	3894.49	16	130
P-91	J-14	J-362	258.19	8	139

Northern Division KYPipe Model Pipe Information

Name	Node1	Node2	Length	Diameter	Roughness
P-910	J-801	-148	2290.2	16	130
P-911	J-802	-146	4721.18	16	130
P-912	J-803	-144	2646.38	16	130
P-913	J-804	-138	2644.04	16	130
P-914	J-806	-142	3447.75	16	130
P-915	J-824	-156	2037.47	16	130
P-916	J-807	AV-New GST	933.71	16	130
P-917	J-807	V-12	871.62	16	130
P-918	AV-New GST	New GST	138.81	16	130
P-919	J-578	J-808	918.94	16	130
P-92	J-14		1077.29	4	137
P-920	J-833	-181	5705.02	16	130
P-921	J-808	-159	4866.07	16	130
P-922	J-809	-164	2078.18	16	130
P-923	J-810	J-811	1106.18	16	130
P-924	J-811	-165	3511.76	16	130
P-925	J-812	-167	3334.82	16	130
P-926	J-813	-168	4076.5	16	130
P-927	J-814	-172	4431.97	16	130
P-928	J-815	-173	4071.16	16	130
P-929	J-816	-175	3357.38	16	130
P-93	J-16		1795.54	4	137
P-930	J-817	-176	5253	16	130
P-931	J-818	New PS-2	96.24	16	130
P-932	J-818	J-820	118.3	16	130
P-933	J-818	J-823	110.3	16	130
P-934	J-821	J-819	0.08625	16	130
P-935	J-821	J-822	120.13	16	130
P-936	J-819	J-578	535.08	16	130
P-937	J-820	New PS-3	94.7	16	130
P-938	J-823	New PS-1	93.05	16	130
P-939	New PS-1	J-819	104.49	16	130
P-94	J-16		2100.78	4	137
P-940	New PS-3	J-822	105.4	16	130
P-941	J-826	-154	1821.25	16	130
P-942	J-44		1911.17	6	130
P-943	J-825		2731.52	6	130
P-944	J-829	-163	1520.98	16	130
P-945	J-827		5444.33	6	130
P-946	J-828		2339.05	6	130
P-947	J-830		6299.21	6	130
P-948	J-832	J-824	473.54	16	130
P-95	J-18		2874.87	8	139
P-96	J-18		8534.4	4	139
P-97	J-19		1874.6	8	139
P-974	CENTRAL SYSTEM	J-957	406	42	130
P-98	J-19		2319.97	4	118
P-989	J-946	J-993	221.57	42	130
P-99	J-19		1808.44	6	137
P-994	J-946	J-960	81.33	42	130
P-995	J-957	J-961	104.76	42	130
P-998	J-960	J-959	105.88	42	130

Northern Division KYPipe Model Pipe Information

Name	Node1	Node2	Length	Diameter	Roughness
P-999	Woodlake#1	J-946	149.14	42	130
P-949	J-833	J-273	463.29	16	130

NORTHERN DIVISION SERVICE AREA MAP

KENTUCKY AMERICAN WATER
LEXINGTON, KENTUCKY

Legend

- Isolation Valve
- PRV
- Gate Valve
- Hydrant
- Check Valve
- Pump
- Tank
- Reservoir
- River
- Interstate
- US Highway
- KY Highway
- Local Roads

Pipe Diameter

- 3 or less
- 4
- 6
- 8
- 12
- 14
- 16
- Zone Boundaries
- County

Gallatin Co. WD Connection and MM
Glencoe Zone
Bromley Tank
Sparta Zone
Wheatley Tank
Carroll Co. Zone
Carroll Co. WD#1 Connection and MM
Central Zone
Owenton North MM
Fairgrounds Tank
Wheatley Zone
Perry St. Tank
Closed Valve
New Columbus Zone
New Columbus
Owenton WTP
Monterey Tank
Pressure Zone Boundary When Pump is Operating and Bypass Valve is Closed
Learning Oak MM (Open)
Owenton South MM
Valve Now Closed
Rockdale MM (Open)
Monterey Zone

0 1.5 3 6 Miles

STRAND ASSOCIATES®

5493.122

Path: S:\LOU\5400--5499\5493\122\Data\GIS\PSC Maps\Northern System Map.mxd User: AndrewE Date: 7/16/2012 Time: 1:43:40 PM

Northern Division KYPipe Model Meter Route Information

Northern Division Meter Usage Summary for May 2011

Meter Route	Street Name	Rate Class	Rate Description	Bill Count	Usage	Unit of Measure
40440	Beverly	1	Residential	5	20.25	1000G
40440	Brady Bay	1	Residential	1	6.00	1000G
40440	Cook	1	Residential	4	15.75	1000G
40440	Eagle Hill	1	Residential	49	167.25	1000G
40440	EAGLE HILL	1	Residential	11	37.50	1000G
40440	Hwy 127 N	1	Residential	3	15.75	1000G
40440	Hwy 127 N/Barn	1	Residential	1	6.00	1000G
40440	Hwy 127 North	1	Residential	50	211.50	1000G
40440	Hwy 127/Ruben	1	Residential	2	25.50	1000G
40440	Hwy 1316	1	Residential	4	12.00	1000G
40440	HWY 127	1	Residential	1	6.75	1000G
40440	HWY 127 NORTH	1	Residential	1	2.25	1000G
40440	O'Toole	1	Residential	1	6.00	1000G
40440	Petitt	1	Residential	10	87.00	1000G
40440	PETITT	1	Residential	1	3.75	1000G
40440	Reuben Lewis	1	Residential	1	3.00	1000G
40440	Robert	1	Residential	1	2.25	1000G
40440	Roberts	1	Residential	8	24.75	1000G
40440	Roberts Lane	1	Residential	1	3.75	1000G
40440	ROBERTS	1	Residential	1	4.50	1000G
40440	ROBERTS LANE	1	Residential	1	2.25	1000G
40440	Sara	1	Residential	1	5.25	1000G
40440	Sarah	1	Residential	1	6.75	1000G
40440	Shirley	1	Residential	3	15.00	1000G
40440	SHIRLEY	1	Residential	1	2.25	1000G
40440	True	1	Residential	1	111.75	1000G
40440	Hwy 127 North	2	Commercial	2	114.00	1000G
41100	Carter	CA	Company Account	1	339.75	1000G
41100	Beck	1	Residential	15	42.75	1000G
41100	BOTTS	1	Residential	4	9.75	1000G
41100	Carter	1	Residential	1	3.75	1000G
41100	Carter Lane	1	Residential	1	2.25	1000G
41100	Cubbage	1	Residential	2	6.00	1000G
41100	Cubbage Ave	1	Residential	7	33.75	1000G
41100	Cubbage Ave.	1	Residential	1	2.25	1000G
41100	Cubbage Avenue	1	Residential	3	9.75	1000G
41100	Cull Road	1	Residential	2	3.75	1000G
41100	East Adair	1	Residential	95	181.50	1000G
41100	East Blanton	1	Residential	4	6.75	1000G
41100	East Perry	1	Residential	11	35.25	1000G
41100	East Seminary	1	Residential	3	6.00	1000G
41100	Ellis	1	Residential	4	7.50	1000G
41100	Ford	1	Residential	10	26.25	1000G
41100	Gaines Avenue	1	Residential	4	5.25	1000G
41100	Gayle	1	Residential	4	8.25	1000G
41100	Gayle Ave	1	Residential	2	4.50	1000G
41100	GAYLE	1	Residential	16	37.50	1000G
41100	GESS ST	1	Residential	1	3.00	1000G
41100	GESS ST.	1	Residential	1	2.25	1000G
41100	Holbrook	1	Residential	1	5.25	1000G

Northern Division KYPipe Model Meter Route Information

Northern Division Meter Usage Summary for May 2011

Meter Route	Street Name	Rate Class	Rate Description	Bill Count	Usage	Unit of Measure
41100	Horizon Homes	1	Residential	30	92.25	1000G
41100	Hwy 127 N	1	Residential	1	1.50	1000G
41100	HWY 127 South	1	Residential	2	12.00	1000G
41100	Jones Hill	1	Residential	2	4.50	1000G
41100	Kelly	1	Residential	11	18.00	1000G
41100	KELLY	1	Residential	24	94.50	1000G
41100	Locust Alley	1	Residential	1	2.25	1000G
41100	Madison	1	Residential	7	14.25	1000G
41100	North Adams	1	Residential	17	57.75	1000G
41100	North Main	1	Residential	8	20.25	1000G
41100	Ransdell	1	Residential	1	9.00	1000G
41100	Robin Drive	1	Residential	16	41.25	1000G
41100	Roland	1	Residential	38	105.00	1000G
41100	Roland Ave	1	Residential	1	1.50	1000G
41100	Roland Ave.	1	Residential	20	42.00	1000G
41100	Rolling Ridge	1	Residential	19	63.75	1000G
41100	Rose Court	1	Residential	4	5.25	1000G
41100	South Madison	1	Residential	6	32.25	1000G
41100	South Main	1	Residential	27	50.00	1000G
41100	Sunset	1	Residential	13	30.00	1000G
41100	SOUTH MADISON	1	Residential	3	18.75	1000G
41100	West Adair	1	Residential	4	7.50	1000G
41100	West Perry	1	Residential	6	10.50	1000G
41100	West Seminary	1	Residential	43	133.50	1000G
41100	WEST ADAIR	1	Residential	9	24.00	1000G
41100	WEST PERRY	1	Residential	19	54.00	1000G
41100	WEST SEMINARY	1	Residential	2	8.25	1000G
41100	Adair	2	Commercial	1	9.00	1000G
41100	Beck	2	Commercial	1	7.50	1000G
41100	Duke Avenue	2	Commercial	1	1.50	1000G
41100	East Adair	2	Commercial	4	36.75	1000G
41100	East Perry	2	Commercial	1	20.25	1000G
41100	Ellis	2	Commercial	1	5.25	1000G
41100	Ellis Road	2	Commercial	1	-	1000G
41100	Gaines Village	2	Commercial	1	39.00	1000G
41100	Holbrook	2	Commercial	1	2.25	1000G
41100	Hwy 127 N	2	Commercial	5	48.75	1000G
41100	Hwy 127 North	2	Commercial	2	243.00	1000G
41100	KELLY	2	Commercial	1	5.25	1000G
41100	LOCUST ALLEY	2	Commercial	1	0.75	1000G
41100	Madison	2	Commercial	6	45.75	1000G
41100	Main	2	Commercial	1	-	1000G
41100	Main/West Perry	2	Commercial	1	-	1000G
41100	North Adams	2	Commercial	1	6.00	1000G
41100	North Main	2	Commercial	18	92.25	1000G
41100	North Thomas	2	Commercial	2	1.50	1000G
41100	NORTH THOMAS	2	Commercial	1	3.75	1000G
41100	Progress Way	2	Commercial	3	18.75	1000G
41100	PARKER ALLEY	2	Commercial	1	5.25	1000G
41100	PEACH PLAZA	2	Commercial	1	17.25	1000G

Northern Division KYPipe Model Meter Route Information

Northern Division Meter Usage Summary for May 2011

Meter Route	Street Name	Rate Class	Rate Description	Bill Count	Usage	Unit of Measure
41100	Roland	2	Commercial	6	89.25	1000G
41100	South Madison	2	Commercial	1	-	1000G
41100	South Main	2	Commercial	8	79.50	1000G
41100	West Blanton	2	Commercial	1	-	1000G
41100	West Bryant	2	Commercial	1	0.75	1000G
41100	West Perry	2	Commercial	2	4.50	1000G
41100	West Seminary	2	Commercial	17	125.25	1000G
41100	WEST BRYANT	2	Commercial	1	7.50	1000G
41100	WEST PERRY	2	Commercial	1	3.75	1000G
41100	East Blanton	4	Other Public Authority	2	6.00	1000G
41100	Madison	4	Other Public Authority	1	0.75	1000G
41100	North Thomas	4	Other Public Authority	1	5.25	1000G
41100	South Main	4	Other Public Authority	1	9.75	1000G
41100	West Bryan	4	Other Public Authority	1	3.75	1000G
41200	East Blanton	CA	Company Account	5	919.00	1000G
41200	Blanch	1	Residential	1	2.25	1000G
41200	Blanche	1	Residential	10	37.50	1000G
41200	Blanche Davis	1	Residential	1	5.25	1000G
41200	Bramblett Lane	1	Residential	3	9.00	1000G
41200	BREEZY	1	Residential	3	5.25	1000G
41200	Cecil	1	Residential	1	3.75	1000G
41200	Cecil Lane	1	Residential	2	2.25	1000G
41200	Cedar Point	1	Residential	2	3.75	1000G
41200	Charles	1	Residential	1	-	1000G
41200	Cubbage Ave	1	Residential	1	3.75	1000G
41200	Cull	1	Residential	14	48.39	1000G
41200	Cull Road	1	Residential	9	24.75	1000G
41200	Davis	1	Residential	1	10.50	1000G
41200	Davis Lake	1	Residential	48	147.00	1000G
41200	Driftwood Drive	1	Residential	1	0.75	1000G
41200	DRIFTWOOD DR	1	Residential	1	-	1000G
41200	East Adair	1	Residential	23	79.50	1000G
41200	East Adair/Hous	1	Residential	1	3.75	1000G
41200	Ellis	1	Residential	2	8.25	1000G
41200	Ellis Road	1	Residential	4	12.75	1000G
41200	Elmer Davis	1	Residential	33	60.75	1000G
41200	Elmer Davis lak	1	Residential	2	-	1000G
41200	Elmer Davis Dam	1	Residential	3	6.75	1000G
41200	Fairview	1	Residential	1	-	1000G
41200	Gratz	1	Residential	67	276.00	1000G
41200	Gratz Rd	1	Residential	1	2.25	1000G
41200	Gratz Rd.	1	Residential	5	12.75	1000G
41200	Gratz Road	1	Residential	7	33.75	1000G
41200	Green Acres	1	Residential	23	100.50	1000G
41200	Greystone Ln	1	Residential	3	8.25	1000G
41200	GRATZ	1	Residential	2	7.50	1000G
41200	GRATZ RD	1	Residential	4	11.25	1000G
41200	GRATZ RD.	1	Residential	1	0.75	1000G
41200	Harris Ridge	1	Residential	12	39.00	1000G
41200	Hide Away Hills	1	Residential	55	94.50	1000G

Northern Division KYPipe Model Meter Route Information

Northern Division Meter Usage Summary for May 2011

Meter Route	Street Name	Rate Class	Rate Description	Bill Count	Usage	Unit of Measure
41200	Hide Away HILLS	1	Residential	1	-	1000G
41200	Holbrook	1	Residential	5	12.75	1000G
41200	Hwy 127	1	Residential	3	11.25	1000G
41200	Hwy 127 N	1	Residential	1	30.00	1000G
41200	Hwy 127 S	1	Residential	43	167.00	1000G
41200	Hwy 127 South	1	Residential	2	1.50	1000G
41200	Hwy 22	1	Residential	2	3.00	1000G
41200	Hwy 22 East	1	Residential	4	2.25	1000G
41200	Hwy 22 West	1	Residential	1	-	1000G
41200	HIde Away Hills	1	Residential	1	-	1000G
41200	HIDE AWAY HILLS	1	Residential	1	9.75	1000G
41200	HWY 127 S	1	Residential	19	65.00	1000G
41200	HWY 127 South	1	Residential	16	33.75	1000G
41200	HWY 22 E	1	Residential	1	9.00	1000G
41200	HWY 22 East	1	Residential	1	3.00	1000G
41200	Jackie Lane	1	Residential	2	12.00	1000G
41200	Lake View	1	Residential	1	-	1000G
41200	Leeward	1	Residential	2	6.75	1000G
41200	North Main	1	Residential	1	-	1000G
41200	Old Sweet Owen	1	Residential	23	66.00	1000G
41200	OLD SWEET OWEN	1	Residential	1	2.25	1000G
41200	Park Ridge	1	Residential	1	1.50	1000G
41200	Rose Bourne	1	Residential	10	2.25	1000G
41200	Rose Hill	1	Residential	1	-	1000G
41200	South Main	1	Residential	1	-	1000G
41200	Squiresville	1	Residential	13	57.00	1000G
41200	Sweet Owen	1	Residential	1	-	1000G
41200	SOUTH FORK ROAD	1	Residential	1	5.25	1000G
41200	Bramblett Lane	2	Commercial	1	18.00	1000G
41200	Gratz	2	Commercial	1	6.00	1000G
41200	Gratz Road	2	Commercial	1	9.00	1000G
41200	Harris Ridge	2	Commercial	1	2.25	1000G
41200	Hwy 127 S	2	Commercial	1	1.50	1000G
41200	Hwy 127 South	2	Commercial	2	5.25	1000G
41200	HWY 127 S	2	Commercial	2	1.50	1000G
41200	HWY 127 South	2	Commercial	3	8.25	1000G
41200	HWY 22 East	2	Commercial	1	0.75	1000G
41200	South Main	2	Commercial	1	-	1000G
41200	Water Plant	2	Commercial	1	0.75	1000G
41200	Ellis	4	Other Public Authority	2	3.00	1000G
41200	Ellis Road	4	Other Public Authority	1	0.75	1000G
50540	Chapman	1	Residential	3	9.75	1000G
50540	Collins	1	Residential	9	36.75	1000G
50540	Courtney	1	Residential	2	12.00	1000G
50540	COLLINS	1	Residential	1	4.50	1000G
50540	Ethridge	1	Residential	4	12.75	1000G
50540	Grace	1	Residential	1	1.50	1000G
50540	Green	1	Residential	1	6.00	1000G
50540	Hawthorne	1	Residential	21	56.25	1000G
50540	Hawthrone	1	Residential	2	6.75	1000G

Northern Division KYPipe Model Meter Route Information

Northern Division Meter Usage Summary for May 2011

Meter Route	Street Name	Rate Class	Rate Description	Bill Count	Usage	Unit of Measure
50540	Howard	1	Residential	14	42.75	1000G
50540	Hwy 127	1	Residential	2	-	1000G
50540	Hwy 127 N	1	Residential	1	6.75	1000G
50540	Hwy 127 North	1	Residential	3	5.25	1000G
50540	HOWARD	1	Residential	2	4.50	1000G
50540	HWY 127 N	1	Residential	1	3.00	1000G
50540	HWY 127 North	1	Residential	1	1.50	1000G
50540	Main	1	Residential	31	97.50	1000G
50540	MAIN	1	Residential	2	5.25	1000G
50540	Noel	1	Residential	10	39.00	1000G
50540	North Main	1	Residential	2	4.50	1000G
50540	North Main St.	1	Residential	1	12.00	1000G
50540	NOEL	1	Residential	1	3.00	1000G
50540	Porter	1	Residential	2	9.75	1000G
50540	PORTER	1	Residential	1	3.75	1000G
50540	Railroad	1	Residential	1	1.50	1000G
50540	South Main	1	Residential	2	0.75	1000G
50540	Stephenson	1	Residential	5	10.50	1000G
50540	STEPHENSON	1	Residential	5	23.25	1000G
50540	Webster	1	Residential	4	9.75	1000G
50540	Howard	2	Commercial	1	2.25	1000G
50540	HOWARD	2	Commercial	1	-	1000G
50540	Main	2	Commercial	5	20.25	1000G
60640	Bromley-Hwy 35	1	Residential	1	18.75	1000G
60640	Cherokee	1	Residential	1	2.25	1000G
60640	CARROLL	1	Residential	2	12.75	1000G
60640	CHEROKEE	1	Residential	1	3.00	1000G
60640	Hwy 1316	1	Residential	4	18.75	1000G
60640	Hwy 35	1	Residential	42	130.00	1000G
60640	Hwy 467	1	Residential	5	27.00	1000G
60640	Hwy 467 W	1	Residential	3	9.00	1000G
60640	Hwy 467 West	1	Residential	13	28.50	1000G
60640	HWY 35	1	Residential	3	9.75	1000G
60640	HWY 467	1	Residential	7	21.00	1000G
60640	HWY 467 W	1	Residential	2	6.75	1000G
60640	HWY 467 WEST	1	Residential	5	19.50	1000G
60640	MAIN	1	Residential	1	5.25	1000G
60640	N Old Hwy 35	1	Residential	1	4.50	1000G
60640	New Lib/Sparta	1	Residential	1	2.25	1000G
60640	Old HWY 35	1	Residential	1	6.00	1000G
60640	Old Hwy 35	1	Residential	1	2.25	1000G
60640	Old Ky 35	1	Residential	1	4.50	1000G
60640	Old Sparta	1	Residential	17	77.25	1000G
60640	Old Sparta Pike	1	Residential	2	0.75	1000G
60640	Old Sparta Rd.	1	Residential	1	7.50	1000G
60640	OLD KY 35	1	Residential	1	4.50	1000G
60640	OLD SPARTA	1	Residential	3	9.75	1000G
60640	Scott	1	Residential	4	12.75	1000G
60640	Sparta Glencoe	1	Residential	2	18.00	1000G
60640	Sparta Sander	1	Residential	1	0.75	1000G

Northern Division KYPipe Model Meter Route Information

Northern Division Meter Usage Summary for May 2011

Meter Route	Street Name	Rate Class	Rate Description	Bill Count	Usage	Unit of Measure
60640	Sparta Sanders	1	Residential	7	24.00	1000G
60640	SCOTT	1	Residential	1	3.00	1000G
60640	SPARTA	1	Residential	1	1.50	1000G
60640	Hwy 35	2	Commercial	5	18.00	1000G
60640	Sparta Sander	2	Commercial	1	2.25	1000G
60640	Sparta Sanders	2	Commercial	2	1.50	1000G
80840	Ball Ridge	1	Residential	3	7.50	1000G
80840	Big Twin Creek	1	Residential	5	5.25	1000G
80840	BALL RIDGE	1	Residential	2	6.00	1000G
80840	Cull	1	Residential	15	57.75	1000G
80840	Dutch Row	1	Residential	2	5.25	1000G
80840	Hwy 227	1	Residential	20	92.25	1000G
80840	Hwy 227 N	1	Residential	7	18.75	1000G
80840	Hwy 227 North	1	Residential	27	108.00	1000G
80840	Hwy 325	1	Residential	23	83.00	1000G
80840	Hwy 36	1	Residential	2	37.50	1000G
80840	HWY 227 N	1	Residential	2	5.25	1000G
80840	HWY 325	1	Residential	2	6.00	1000G
80840	Liberty Ridge	1	Residential	2	9.00	1000G
80840	Lucky 7	1	Residential	1	28.50	1000G
80840	New Liberty	1	Residential	14	99.00	1000G
80840	New Liberty Tp	1	Residential	2	6.75	1000G
80840	New Liberty TPK	1	Residential	1	3.75	1000G
80840	Noels	1	Residential	1	6.75	1000G
80840	Old New Liberty	1	Residential	1	2.25	1000G
80840	Sharon	1	Residential	3	6.75	1000G
80840	Sharon Glass	1	Residential	5	0.75	1000G
80840	Sharon-Glass	1	Residential	1	2.25	1000G
80840	SHARON GLASS	1	Residential	9	15.75	1000G
80840	Two Mile	1	Residential	6	18.75	1000G
80840	Two Mile Creek	1	Residential	2	1.50	1000G
80840	Hwy 227	2	Commercial	3	9.00	1000G
90940	Bucks Run	1	Residential	7	27.75	1000G
90940	Butler Inn	1	Residential	4	20.25	1000G
90940	BUCKS RUN	1	Residential	1	1.50	1000G
90940	Eagle Station	1	Residential	1	9.75	1000G
90940	Hawthrone	1	Residential	1	9.00	1000G
90940	Hwy 1669	1	Residential	12	71.25	1000G
90940	Hwy 227	1	Residential	5	6.75	1000G
90940	Hwy 227 N	1	Residential	53	212.25	1000G
90940	Hwy 227 North	1	Residential	1	6.75	1000G
90940	Hwy 36	1	Residential	7	23.25	1000G
90940	HWY 227 N	1	Residential	3	8.25	1000G
90940	HWY 227/HOUSE	1	Residential	1	3.00	1000G
90940	HWY 36	1	Residential	1	4.50	1000G
90940	J S	1	Residential	4	15.00	1000G
90940	J S Lane	1	Residential	2	7.50	1000G
90940	Jewell	1	Residential	3	9.00	1000G
90940	Jewell Ave	1	Residential	1	4.50	1000G
90940	Manley	1	Residential	1	6.75	1000G

Northern Division KYPipe Model Meter Route Information

Northern Division Meter Usage Summary for May 2011

Meter Route	Street Name	Rate Class	Rate Description	Bill Count	Usage	Unit of Measure
90940	New Lib./Sparta	1	Residential	1	0.75	1000G
90940	New Lib/Sparta	1	Residential	5	12.75	1000G
90940	New Libert Spar	1	Residential	1	5.25	1000G
90940	New Liberty Spa	1	Residential	35	141.00	1000G
90940	NEW LIB./SPARTA	1	Residential	1	4.50	1000G
90940	NEW LIBERTY SP	1	Residential	1	9.75	1000G
90940	NEW LIBERTY SPA	1	Residential	1	3.00	1000G
90940	Sparta New Lib	1	Residential	1	-	1000G
90940	SPARTA/NEW LIB	1	Residential	1	-	1000G
90940	Twin Oaks	1	Residential	2	6.00	1000G
90940	Twin Oaks Ln	1	Residential	1	2.25	1000G
90940	Hwy 227	2	Commercial	3	9.00	1000G
90940	Hwy 227 N	2	Commercial	2	3.75	1000G
101040		CA	Company Account	3	99.10	1000G
101040	Hwy 127 North	CA	Company Account	1	0.75	1000G
101040	Hwy 127	1	Residential	2	4.50	1000G
101040	Hwy 127 North	1	Residential	43	207.75	1000G
101040	Hyw 127 North	1	Residential	1	3.00	1000G
101040	HIGHWAY 127	1	Residential	1	3.00	1000G
101040	HWY 127 N	1	Residential	2	10.50	1000G
101040	Lynn	1	Residential	1	2.25	1000G
101040	Old New Libert	1	Residential	1	6.75	1000G
101040	Old New Liberty	1	Residential	33	111.75	1000G
101040	OLD NEW LIBERTY	1	Residential	2	3.00	1000G
101040	Rose Hill	1	Residential	8	22.50	1000G
101040	ROSE HILL	1	Residential	1	6.75	1000G
101040	Sweet Owen	1	Residential	21	70.50	1000G
101040	Swen Owen	1	Residential	1	3.75	1000G
101040	Hwy 127 North	2	Commercial	1	2.25	1000G
111140	Hwy 127	1	Residential	1	2.25	1000G
111140	Hwy 127 N	1	Residential	62	234.00	1000G
111140	Hwy 127 North	1	Residential	5	8.25	1000G
111140	HWY 127	1	Residential	1	4.50	1000G
111140	HWY 127 N	1	Residential	2	9.75	1000G
111140	HWY 127 N LOT 8	1	Residential	1	1.50	1000G
111140	HWY 127 North	1	Residential	2	2.25	1000G
111140	Kemper	1	Residential	5	14.25	1000G
111140	Kemper Lane	1	Residential	1	24.00	1000G
111140	KEMPER	1	Residential	1	7.50	1000G
111140	Old Sparta	1	Residential	1	3.00	1000G
111140	Smith	1	Residential	6	48.75	1000G
111140	Stewart	1	Residential	14	42.00	1000G
111140	Stewart Lane	1	Residential	4	9.00	1000G
111140	Stewart Ridge	1	Residential	15	41.25	1000G
111140	STEWART RIDGE	1	Residential	2	4.50	1000G
111140	Todd	1	Residential	12	24.00	1000G
111140	Todd Ln	1	Residential	1	1.50	1000G
111140	TODD	1	Residential	1	12.00	1000G
111140	Hwy 127 N	2	Commercial	2	20.25	1000G
121240	Cardinal	1	Residential	14	27.75	1000G

Northern Division KYPipe Model Meter Route Information

Northern Division Meter Usage Summary for May 2011

Meter Route	Street Name	Rate Class	Rate Description	Bill Count	Usage	Unit of Measure
121240	Hwy 22 E	1	Residential	42	159.00	1000G
121240	Hwy 22 East	1	Residential	2	7.50	1000G
121240	HWY 22 E	1	Residential	3	6.75	1000G
121240	HWY 22 EAST	1	Residential	2	-	1000G
121240	O'Banion	1	Residential	2	8.25	1000G
121240	O'Banion Lane	1	Residential	1	4.50	1000G
121240	Platt	1	Residential	1	1.50	1000G
121240	Hwy 22 E	2	Commercial	1	7.50	1000G
121240	Hwy 22 E	4	Other Public Authority	6	387.75	1000G
131340	Agee	1	Residential	23	86.25	1000G
131340	Clifton	1	Residential	1	6.75	1000G
131340	Eagle View	1	Residential	4	13.50	1000G
131340	EAGLE VIEW	1	Residential	3	11.25	1000G
131340	EAGLE VIEW EST	1	Residential	1	7.50	1000G
131340	Fortner Ridge	1	Residential	2	8.25	1000G
131340	FORTNER	1	Residential	1	3.75	1000G
131340	Garnett	1	Residential	2	5.25	1000G
131340	Hawk View	1	Residential	1	3.00	1000G
131340	Hawkview	1	Residential	1	3.75	1000G
131340	Hidden View	1	Residential	1	3.75	1000G
131340	Hwy 22 E	1	Residential	5	24.75	1000G
131340	Hwy 22 East	1	Residential	42	160.50	1000G
131340	Hwy 422 East	1	Residential	1	2.25	1000G
131340	HWY 22 E	1	Residential	2	11.25	1000G
131340	HWY 22 E/BARN	1	Residential	1	-	1000G
131340	HWY 22 East	1	Residential	2	6.75	1000G
131340	HWY 22 EAST	1	Residential	5	17.25	1000G
131340	J Pruett	1	Residential	1	5.25	1000G
131340	J Prutte	1	Residential	3	10.50	1000G
131340	J PRUITT	1	Residential	1	5.25	1000G
131340	Jansen Trace	1	Residential	4	12.00	1000G
131340	Lyons	1	Residential	3	17.25	1000G
131340	Mount Hebron Ch	1	Residential	2	12.75	1000G
131340	Sweet Owen	1	Residential	20	69.00	1000G
131340	SWEET OWEN	1	Residential	1	2.25	1000G
141440	Backwater	1	Residential	1	3.75	1000G
141440	Backwaters	1	Residential	1	9.00	1000G
141440	Breck	1	Residential	22	42.75	1000G
141440	BRECK	1	Residential	2	5.25	1000G
141440	Dickie	1	Residential	2	3.00	1000G
141440	Georgetown	1	Residential	128	447.75	1000G
141440	Georgetown RD	1	Residential	1	1.50	1000G
141440	Georgetwon	1	Residential	1	-	1000G
141440	Goergetown	1	Residential	1	0.75	1000G
141440	Goosecreek	1	Residential	3	7.50	1000G
141440	GEORGETOWN	1	Residential	5	15.00	1000G
141440	GEORGETOWN RD	1	Residential	1	-	1000G
141440	Hammond School	1	Residential	12	27.75	1000G
141440	Hwy 227	1	Residential	2	9.75	1000G
141440	Jodie & Travis	1	Residential	1	7.50	1000G

Northern Division KYPipe Model Meter Route Information

Northern Division Meter Usage Summary for May 2011

Meter Route	Street Name	Rate Class	Rate Description	Bill Count	Usage	Unit of Measure
141440	Kincade	1	Residential	3	7.50	1000G
141440	Laura	1	Residential	1	4.50	1000G
141440	Natlee Slatin	1	Residential	1	-	1000G
141440	Natlee Swope	1	Residential	1	6.75	1000G
141440	New Columbus	1	Residential	19	60.00	1000G
141440	Old Greenup	1	Residential	10	25.50	1000G
141440	Old Teresita	1	Residential	2	7.50	1000G
141440	Old Terisita	1	Residential	1	3.75	1000G
141440	Red Oak	1	Residential	2	3.75	1000G
141440	Slantin	1	Residential	6	12.00	1000G
141440	Slantin Gate	1	Residential	1	-	1000G
141440	Slantin Pond	1	Residential	1	-	1000G
141440	Slantin White	1	Residential	1	-	1000G
141440	Slatin	1	Residential	1	9.75	1000G
141440	Swope	1	Residential	39	118.50	1000G
141440	Swope Natlee	1	Residential	2	8.25	1000G
141440	Swope Natlee E	1	Residential	2	3.75	1000G
141440	Swope Rd	1	Residential	2	0.75	1000G
141440	SWOPE	1	Residential	20	67.50	1000G
141440	SWOPE RD LOT 12	1	Residential	1	3.75	1000G
141440	Towles	1	Residential	3	9.00	1000G
141440	Georgetown	2	Commercial	5	12.75	1000G
151540	Angel	1	Residential	1	3.00	1000G
151540	Evanwood	1	Residential	4	14.25	1000G
151540	Greenup	1	Residential	44	186.00	1000G
151540	GREENUP	1	Residential	3	9.00	1000G
151540	GREENUP RD	1	Residential	1	2.25	1000G
151540	Hwy 127 South	1	Residential	1	-	1000G
151540	Hwy 22 East	1	Residential	1	0.75	1000G
151540	Hwy 330	1	Residential	14	73.50	1000G
151540	Hwy 845	1	Residential	1	-	1000G
151540	HWY 330 APT 1	1	Residential	1	5.25	1000G
151540	KENNY	1	Residential	1	3.00	1000G
151540	Lucas	1	Residential	1	2.25	1000G
151540	Lucus	1	Residential	1	2.25	1000G
151540	McDowell Branch	1	Residential	3	8.25	1000G
151540	Old Kenny	1	Residential	1	0.75	1000G
151540	Old Monterey	1	Residential	38	117.75	1000G
151540	OLD KENNY	1	Residential	1	4.50	1000G
151540	OLD MONTEREY	1	Residential	5	15.75	1000G
151540	Ridgeview	1	Residential	1	5.25	1000G
151540	Slippery Rock	1	Residential	11	68.25	1000G
151540	SLIPPERY ROCK	1	Residential	4	15.00	1000G
151540	Old Monterey	2	Commercial	1	0.75	1000G
151540	Old Monterey	4	Other Public Authority	1	3.00	1000G
171727	Red Clover	1	Residential	1	6.00	1000G
171739	Ballard	1	Residential	2	11.25	1000G
171739	Bridge	1	Residential	10	45.75	1000G
171739	Burkes	1	Residential	1	4.50	1000G
171739	Burks Lane	1	Residential	1	1.50	1000G

Northern Division KYPipe Model Meter Route Information

Northern Division Meter Usage Summary for May 2011

Meter Route	Street Name	Rate Class	Rate Description	Bill Count	Usage	Unit of Measure
171739	BALLARD	1	Residential	1	1.50	1000G
171739	BRIDGE	1	Residential	1	0.75	1000G
171739	Cedar Creek	1	Residential	2	3.75	1000G
171739	Claxon Ridge	1	Residential	23	65.00	1000G
171739	Clyde	1	Residential	1	8.25	1000G
171739	Divided Ridge	1	Residential	9	31.50	1000G
171739	Frank Clark	1	Residential	2	7.50	1000G
171739	FRANK CLARK	1	Residential	1	-	1000G
171739	Gill Branch	1	Residential	1	-	1000G
171739	Gills Branch	1	Residential	3	4.50	1000G
171739	GILL BRANCH	1	Residential	1	2.25	1000G
171739	GILLS BRANCH	1	Residential	1	2.25	1000G
171739	Herman Green	1	Residential	20	52.50	1000G
171739	High	1	Residential	8	24.75	1000G
171739	Hillcrest	1	Residential	4	3.75	1000G
171739	Hwy 127 S	1	Residential	18	42.00	1000G
171739	Hwy 127 South	1	Residential	30	96.75	1000G
171739	Hwy 355	1	Residential	3	9.75	1000G
171739	HIGH	1	Residential	1	3.75	1000G
171739	HWY 127 S	1	Residential	3	9.75	1000G
171739	HWY 127 South	1	Residential	1	3.00	1000G
171739	HWY 127 SOUTH	1	Residential	6	27.00	1000G
171739	HWY 355	1	Residential	2	0.75	1000G
171739	Karsner	1	Residential	1	0.75	1000G
171739	Lucas	1	Residential	8	33.75	1000G
171739	Monterey	1	Residential	4	10.50	1000G
171739	Monterey Pike	1	Residential	1	0.75	1000G
171739	Morgadora	1	Residential	2	6.75	1000G
171739	MORGADORA	1	Residential	1	0.75	1000G
171739	Old Frankfort	1	Residential	11	44.25	1000G
171739	OLD FRANKFORT	1	Residential	1	2.25	1000G
171739	Sawdridge	1	Residential	1	2.25	1000G
171739	Sawdridge Creek	1	Residential	1	0.75	1000G
171739	Shady	1	Residential	7	27.00	1000G
171739	SAWDRIDGE CREEK	1	Residential	1	0.75	1000G
171739	SHADY	1	Residential	1	2.25	1000G
171739	Taylor	1	Residential	18	44.25	1000G
171739	TAYLOR	1	Residential	1	0.75	1000G
171739	Wilson	1	Residential	3	12.75	1000G
171739	Worth	1	Residential	2	2.25	1000G
171739	WILSON	1	Residential	1	4.50	1000G
171739	WORTH	1	Residential	1	3.00	1000G
171739	Claxon Ridge A	2	Commercial	1	-	1000G
171739	Claxon Ridge B	2	Commercial	1	0.75	1000G
171739	Hwy 127 South	2	Commercial	1	28.50	1000G
171739	Worth	2	Commercial	1	-	1000G
171740	Ashley	1	Residential	1	3.00	1000G
171740	Brush Creek	1	Residential	1	6.75	1000G
171740	Burley	1	Residential	7	20.25	1000G
171740	BURLEY	1	Residential	4	12.75	1000G

Northern Division KYPipe Model Meter Route Information

Northern Division Meter Usage Summary for May 2011

Meter Route	Street Name	Rate Class	Rate Description	Bill Count	Usage	Unit of Measure
171740	Folsom-Jonesvil	1	Residential	1	0.75	1000G
171740	Folsom-Jonesvle	1	Residential	9	25.50	1000G
171740	FOLSOM-JONESVLE	1	Residential	1	2.25	1000G
171740	Golden Circle	1	Residential	11	35.25	1000G
171740	Grider Ridge	1	Residential	1	3.75	1000G
171740	Handy	1	Residential	12	42.00	1000G
171740	Horton	1	Residential	1	2.25	1000G
171740	Hwy 36	1	Residential	1	-	1000G
171740	Jonesville	1	Residential	92	288.75	1000G
171740	Jonesvle/Folsom	1	Residential	1	3.00	1000G
171740	JONESVILLE	1	Residential	12	47.25	1000G
171740	Kerns	1	Residential	3	8.25	1000G
171740	KERNS	1	Residential	1	1.50	1000G
171740	Long Ridge	1	Residential	2	9.00	1000G
171740	LONG RIDGE	1	Residential	1	2.25	1000G
171740	Parts	1	Residential	7	17.25	1000G
171740	Parts Lane	1	Residential	1	3.00	1000G
171740	Pilot's Dream	1	Residential	6	10.50	1000G
171740	School	1	Residential	10	22.50	1000G
171740	South Fork	1	Residential	24	71.25	1000G
171740	Stewart Ridge	1	Residential	12	48.75	1000G
171740	STEWART RIDGE	1	Residential	2	6.75	1000G
171740	Jonesville	2	Commercial	5	10.50	1000G
171740	School	2	Commercial	1	34.50	1000G
181840	Dump	1	Residential	1	-	1000G
181840	Duncan Hill	1	Residential	4	31.50	1000G
181840	Elk Lake	1	Residential	2	5.25	1000G
181840	Elk Lake Resort	1	Residential	5	15.75	1000G
181840	Guard House	1	Residential	1	0.75	1000G
181840	Hwy 330	1	Residential	17	37.50	1000G
181840	HWY 330	1	Residential	3	22.50	1000G
181840	Lake Shore	1	Residential	1	0.75	1000G
181840	Lot 10	1	Residential	1	1.50	1000G
181840	Lot 1000	1	Residential	1	-	1000G
181840	Lot 1001	1	Residential	1	2.25	1000G
181840	Lot 1003	1	Residential	1	-	1000G
181840	Lot 1006	1	Residential	1	-	1000G
181840	Lot 1009	1	Residential	1	-	1000G
181840	Lot 1013	1	Residential	1	-	1000G
181840	Lot 1014	1	Residential	1	0.75	1000G
181840	Lot 1015	1	Residential	1	-	1000G
181840	Lot 1017	1	Residential	1	0.75	1000G
181840	Lot 1018	1	Residential	1	-	1000G
181840	Lot 1019	1	Residential	1	-	1000G
181840	Lot 1025	1	Residential	1	0.75	1000G
181840	Lot 104	1	Residential	1	-	1000G
181840	Lot 1041	1	Residential	1	0.75	1000G
181840	Lot 1042	1	Residential	1	0.75	1000G
181840	Lot 1044	1	Residential	1	-	1000G
181840	Lot 1045	1	Residential	1	-	1000G

Northern Division KYPipe Model Meter Route Information

Northern Division Meter Usage Summary for May 2011

Meter Route	Street Name	Rate Class	Rate Description	Bill Count	Usage	Unit of Measure
181840	Lot 1049	1	Residential	1	6.00	1000G
181840	Lot 105	1	Residential	1	2.25	1000G
181840	Lot 1051	1	Residential	1	-	1000G
181840	Lot 1052	1	Residential	2	0.75	1000G
181840	Lot 1057	1	Residential	1	0.75	1000G
181840	Lot 1060	1	Residential	1	-	1000G
181840	Lot 1061	1	Residential	1	-	1000G
181840	Lot 1064	1	Residential	1	0.75	1000G
181840	Lot 1066	1	Residential	1	0.75	1000G
181840	Lot 1068	1	Residential	1	1.50	1000G
181840	Lot 1070	1	Residential	1	2.25	1000G
181840	Lot 1071	1	Residential	1	0.75	1000G
181840	Lot 1072	1	Residential	1	-	1000G
181840	Lot 1079	1	Residential	1	1.50	1000G
181840	Lot 108	1	Residential	1	-	1000G
181840	Lot 109	1	Residential	1	-	1000G
181840	Lot 1090	1	Residential	1	0.75	1000G
181840	Lot 11	1	Residential	1	-	1000G
181840	Lot 110	1	Residential	1	6.00	1000G
181840	Lot 111	1	Residential	1	5.25	1000G
181840	Lot 112	1	Residential	1	-	1000G
181840	Lot 113	1	Residential	1	-	1000G
181840	Lot 1142	1	Residential	1	-	1000G
181840	Lot 1146	1	Residential	3	-	1000G
181840	Lot 1147	1	Residential	1	8.25	1000G
181840	Lot 1150	1	Residential	1	0.75	1000G
181840	Lot 1154	1	Residential	1	-	1000G
181840	Lot 1155	1	Residential	1	-	1000G
181840	Lot 1158	1	Residential	1	-	1000G
181840	Lot 116	1	Residential	1	-	1000G
181840	Lot 1162	1	Residential	1	1.50	1000G
181840	Lot 1168	1	Residential	1	-	1000G
181840	Lot 1170	1	Residential	1	-	1000G
181840	Lot 1171	1	Residential	1	-	1000G
181840	Lot 1176	1	Residential	1	-	1000G
181840	Lot 1177	1	Residential	1	-	1000G
181840	Lot 1189	1	Residential	1	0.75	1000G
181840	Lot 12	1	Residential	1	-	1000G
181840	Lot 123	1	Residential	1	-	1000G
181840	Lot 125	1	Residential	1	1.50	1000G
181840	Lot 1265	1	Residential	1	0.75	1000G
181840	Lot 1280	1	Residential	1	-	1000G
181840	Lot 1285	1	Residential	1	1.50	1000G
181840	Lot 1289	1	Residential	1	4.50	1000G
181840	Lot 1313	1	Residential	1	0.75	1000G
181840	Lot 1320	1	Residential	1	0.75	1000G
181840	Lot 1323	1	Residential	1	-	1000G
181840	Lot 1325	1	Residential	1	0.75	1000G
181840	Lot 1327	1	Residential	1	-	1000G
181840	Lot 1328	1	Residential	1	-	1000G

Northern Division KYPipe Model Meter Route Information

Northern Division Meter Usage Summary for May 2011

Meter Route	Street Name	Rate Class	Rate Description	Bill Count	Usage	Unit of Measure
181840	Lot 1331	1	Residential	1	-	1000G
181840	Lot 1334	1	Residential	1	-	1000G
181840	Lot 1335	1	Residential	1	0.75	1000G
181840	Lot 1337	1	Residential	1	7.50	1000G
181840	Lot 1339	1	Residential	1	-	1000G
181840	Lot 1343 Lodge	1	Residential	1	0.75	1000G
181840	Lot 1346	1	Residential	1	-	1000G
181840	Lot 1350	1	Residential	1	-	1000G
181840	Lot 1351	1	Residential	1	-	1000G
181840	Lot 1354	1	Residential	1	-	1000G
181840	Lot 1355	1	Residential	1	2.25	1000G
181840	Lot 1357	1	Residential	1	-	1000G
181840	Lot 1372	1	Residential	1	-	1000G
181840	Lot 1376	1	Residential	1	-	1000G
181840	Lot 139	1	Residential	1	3.75	1000G
181840	Lot 1391	1	Residential	1	0.75	1000G
181840	Lot 1395	1	Residential	1	-	1000G
181840	Lot 1398	1	Residential	1	0.75	1000G
181840	Lot 14	1	Residential	1	-	1000G
181840	Lot 1400	1	Residential	1	1.50	1000G
181840	Lot 1403	1	Residential	1	-	1000G
181840	Lot 1404	1	Residential	1	-	1000G
181840	Lot 1406 & 1407	1	Residential	1	0.75	1000G
181840	Lot 1409	1	Residential	1	0.75	1000G
181840	Lot 141	1	Residential	1	4.50	1000G
181840	Lot 1411	1	Residential	1	-	1000G
181840	Lot 1412	1	Residential	1	-	1000G
181840	Lot 1415	1	Residential	1	-	1000G
181840	Lot 1416	1	Residential	1	-	1000G
181840	Lot 1418	1	Residential	1	0.75	1000G
181840	Lot 1420	1	Residential	1	-	1000G
181840	Lot 1424	1	Residential	1	0.75	1000G
181840	Lot 1426	1	Residential	1	-	1000G
181840	Lot 1427	1	Residential	1	-	1000G
181840	Lot 1428	1	Residential	1	5.25	1000G
181840	Lot 1435	1	Residential	1	-	1000G
181840	Lot 1437	1	Residential	1	-	1000G
181840	Lot 144	1	Residential	1	2.25	1000G
181840	Lot 145	1	Residential	1	0.75	1000G
181840	Lot 148	1	Residential	1	-	1000G
181840	Lot 15	1	Residential	1	2.25	1000G
181840	Lot 151	1	Residential	1	4.50	1000G
181840	Lot 1553	1	Residential	1	2.25	1000G
181840	Lot 1565	1	Residential	1	-	1000G
181840	Lot 1567	1	Residential	1	0.75	1000G
181840	Lot 1574	1	Residential	1	7.50	1000G
181840	Lot 158	1	Residential	1	3.75	1000G
181840	Lot 1584	1	Residential	1	1.50	1000G
181840	Lot 16	1	Residential	1	-	1000G
181840	Lot 160	1	Residential	1	1.50	1000G

Northern Division KYPipe Model Meter Route Information

Northern Division Meter Usage Summary for May 2011

Meter Route	Street Name	Rate Class	Rate Description	Bill Count	Usage	Unit of Measure
181840	Lot 165	1	Residential	1	2.25	1000G
181840	Lot 17	1	Residential	1	3.00	1000G
181840	Lot 171	1	Residential	1	3.75	1000G
181840	Lot 18	1	Residential	1	-	1000G
181840	Lot 190	1	Residential	1	0.75	1000G
181840	Lot 193a	1	Residential	1	-	1000G
181840	Lot 195	1	Residential	1	1.50	1000G
181840	Lot 198	1	Residential	1	-	1000G
181840	Lot 2	1	Residential	1	3.00	1000G
181840	Lot 208	1	Residential	1	2.25	1000G
181840	Lot 212	1	Residential	1	1.50	1000G
181840	Lot 216	1	Residential	1	-	1000G
181840	Lot 218	1	Residential	1	5.25	1000G
181840	Lot 23	1	Residential	1	0.75	1000G
181840	Lot 231	1	Residential	1	-	1000G
181840	Lot 24	1	Residential	1	-	1000G
181840	Lot 25	1	Residential	1	0.75	1000G
181840	Lot 273	1	Residential	1	-	1000G
181840	Lot 274	1	Residential	1	9.75	1000G
181840	Lot 28	1	Residential	1	-	1000G
181840	Lot 3	1	Residential	1	-	1000G
181840	Lot 30	1	Residential	1	-	1000G
181840	Lot 300	1	Residential	1	1.50	1000G
181840	Lot 302	1	Residential	1	-	1000G
181840	Lot 306	1	Residential	1	-	1000G
181840	Lot 311	1	Residential	1	2.25	1000G
181840	Lot 314	1	Residential	1	0.75	1000G
181840	Lot 32	1	Residential	1	-	1000G
181840	Lot 336	1	Residential	1	18.00	1000G
181840	Lot 337	1	Residential	1	-	1000G
181840	Lot 338	1	Residential	1	0.75	1000G
181840	Lot 34	1	Residential	1	4.50	1000G
181840	Lot 340	1	Residential	1	0.75	1000G
181840	Lot 342	1	Residential	1	-	1000G
181840	Lot 344	1	Residential	1	0.75	1000G
181840	Lot 349 Hillcre	1	Residential	1	4.50	1000G
181840	Lot 352	1	Residential	1	2.25	1000G
181840	Lot 36	1	Residential	1	1.50	1000G
181840	Lot 362	1	Residential	1	0.75	1000G
181840	Lot 366	1	Residential	1	2.25	1000G
181840	Lot 37	1	Residential	1	0.75	1000G
181840	Lot 371	1	Residential	1	4.50	1000G
181840	Lot 377	1	Residential	1	0.75	1000G
181840	Lot 389	1	Residential	1	-	1000G
181840	Lot 39	1	Residential	1	-	1000G
181840	Lot 390	1	Residential	1	-	1000G
181840	Lot 391	1	Residential	1	-	1000G
181840	Lot 393	1	Residential	1	0.75	1000G
181840	Lot 4	1	Residential	1	6.00	1000G
181840	Lot 400	1	Residential	1	-	1000G

Northern Division KYPipe Model Meter Route Information

Northern Division Meter Usage Summary for May 2011

Meter Route	Street Name	Rate Class	Rate Description	Bill Count	Usage	Unit of Measure
181840	Lot 405	1	Residential	1	-	1000G
181840	Lot 409	1	Residential	1	0.75	1000G
181840	Lot 411	1	Residential	1	-	1000G
181840	Lot 412	1	Residential	1	-	1000G
181840	Lot 415	1	Residential	1	-	1000G
181840	Lot 416	1	Residential	1	16.50	1000G
181840	Lot 418	1	Residential	1	-	1000G
181840	Lot 42	1	Residential	1	0.75	1000G
181840	Lot 420	1	Residential	1	-	1000G
181840	Lot 421	1	Residential	1	-	1000G
181840	Lot 424	1	Residential	1	0.75	1000G
181840	Lot 426	1	Residential	1	-	1000G
181840	Lot 427	1	Residential	1	7.50	1000G
181840	Lot 43	1	Residential	1	-	1000G
181840	Lot 44	1	Residential	1	0.75	1000G
181840	Lot 444	1	Residential	1	-	1000G
181840	Lot 446	1	Residential	1	2.25	1000G
181840	Lot 449	1	Residential	1	-	1000G
181840	Lot 45	1	Residential	1	0.75	1000G
181840	Lot 46	1	Residential	1	0.75	1000G
181840	Lot 48	1	Residential	1	6.00	1000G
181840	Lot 480	1	Residential	1	-	1000G
181840	Lot 483	1	Residential	1	1.50	1000G
181840	Lot 487	1	Residential	1	1.50	1000G
181840	Lot 49	1	Residential	1	-	1000G
181840	Lot 498	1	Residential	1	1.50	1000G
181840	Lot 50	1	Residential	1	0.75	1000G
181840	Lot 502	1	Residential	1	-	1000G
181840	Lot 517	1	Residential	1	-	1000G
181840	Lot 518	1	Residential	1	-	1000G
181840	Lot 519	1	Residential	1	-	1000G
181840	Lot 521	1	Residential	1	-	1000G
181840	Lot 524	1	Residential	1	0.75	1000G
181840	Lot 525	1	Residential	1	-	1000G
181840	Lot 53	1	Residential	1	6.75	1000G
181840	Lot 6	1	Residential	1	-	1000G
181840	Lot 600	1	Residential	1	2.25	1000G
181840	Lot 602	1	Residential	1	-	1000G
181840	Lot 603	1	Residential	1	2.25	1000G
181840	Lot 605	1	Residential	1	-	1000G
181840	Lot 607	1	Residential	1	0.75	1000G
181840	Lot 608	1	Residential	1	1.50	1000G
181840	Lot 609	1	Residential	1	1.50	1000G
181840	Lot 610	1	Residential	1	-	1000G
181840	Lot 611	1	Residential	1	2.25	1000G
181840	Lot 612	1	Residential	1	0.75	1000G
181840	Lot 614	1	Residential	1	2.25	1000G
181840	Lot 617	1	Residential	1	-	1000G
181840	Lot 618	1	Residential	1	-	1000G
181840	Lot 619	1	Residential	1	1.50	1000G

Northern Division KYPipe Model Meter Route Information

Northern Division Meter Usage Summary for May 2011

Meter Route	Street Name	Rate Class	Rate Description	Bill Count	Usage	Unit of Measure
181840	Lot 62	1	Residential	1	-	1000G
181840	Lot 621	1	Residential	1	2.25	1000G
181840	Lot 624	1	Residential	1	-	1000G
181840	Lot 627	1	Residential	1	38.25	1000G
181840	Lot 63	1	Residential	1	-	1000G
181840	Lot 641	1	Residential	1	0.75	1000G
181840	Lot 648	1	Residential	1	1.50	1000G
181840	Lot 649	1	Residential	1	1.50	1000G
181840	Lot 65	1	Residential	1	-	1000G
181840	Lot 651	1	Residential	1	-	1000G
181840	Lot 656	1	Residential	1	-	1000G
181840	Lot 658 Elk Res	1	Residential	1	-	1000G
181840	Lot 660	1	Residential	1	0.75	1000G
181840	Lot 661	1	Residential	1	0.75	1000G
181840	Lot 663	1	Residential	1	1.50	1000G
181840	Lot 665	1	Residential	1	-	1000G
181840	Lot 667	1	Residential	2	4.50	1000G
181840	Lot 669	1	Residential	1	-	1000G
181840	Lot 673	1	Residential	1	0.75	1000G
181840	Lot 677	1	Residential	1	-	1000G
181840	Lot 678	1	Residential	1	-	1000G
181840	Lot 68	1	Residential	1	0.75	1000G
181840	Lot 681	1	Residential	1	-	1000G
181840	Lot 683	1	Residential	1	-	1000G
181840	Lot 685	1	Residential	1	3.75	1000G
181840	Lot 7	1	Residential	1	1.50	1000G
181840	Lot 70	1	Residential	1	-	1000G
181840	Lot 704	1	Residential	1	1.50	1000G
181840	Lot 72	1	Residential	1	8.25	1000G
181840	Lot 74	1	Residential	1	-	1000G
181840	Lot 760	1	Residential	1	2.25	1000G
181840	Lot 765	1	Residential	1	-	1000G
181840	Lot 77	1	Residential	1	-	1000G
181840	Lot 771	1	Residential	1	-	1000G
181840	Lot 772	1	Residential	1	3.00	1000G
181840	Lot 78	1	Residential	1	0.75	1000G
181840	Lot 780	1	Residential	1	1.50	1000G
181840	Lot 781	1	Residential	1	-	1000G
181840	Lot 784	1	Residential	1	-	1000G
181840	Lot 785	1	Residential	1	0.75	1000G
181840	Lot 786	1	Residential	1	0.75	1000G
181840	Lot 789	1	Residential	1	1.50	1000G
181840	Lot 79	1	Residential	1	-	1000G
181840	Lot 792	1	Residential	1	2.25	1000G
181840	Lot 794	1	Residential	1	-	1000G
181840	Lot 797	1	Residential	1	-	1000G
181840	Lot 799	1	Residential	1	-	1000G
181840	Lot 8	1	Residential	1	1.50	1000G
181840	Lot 80	1	Residential	1	0.75	1000G
181840	Lot 800	1	Residential	1	4.50	1000G

Northern Division KYPipe Model Meter Route Information

Northern Division Meter Usage Summary for May 2011

Meter Route	Street Name	Rate Class	Rate Description	Bill Count	Usage	Unit of Measure
181840	Lot 803	1	Residential	1	-	1000G
181840	Lot 804	1	Residential	1	-	1000G
181840	Lot 812	1	Residential	1	0.75	1000G
181840	Lot 814	1	Residential	1	0.75	1000G
181840	Lot 819	1	Residential	1	-	1000G
181840	Lot 822	1	Residential	1	0.75	1000G
181840	Lot 824	1	Residential	1	2.25	1000G
181840	Lot 829	1	Residential	1	0.75	1000G
181840	Lot 833	1	Residential	1	-	1000G
181840	Lot 834	1	Residential	1	0.75	1000G
181840	Lot 835	1	Residential	1	-	1000G
181840	Lot 836	1	Residential	1	0.75	1000G
181840	Lot 837	1	Residential	1	0.75	1000G
181840	Lot 84	1	Residential	1	-	1000G
181840	Lot 841	1	Residential	1	1.50	1000G
181840	Lot 88	1	Residential	1	3.75	1000G
181840	Lot 880	1	Residential	1	-	1000G
181840	Lot 882	1	Residential	1	0.75	1000G
181840	Lot 883	1	Residential	1	-	1000G
181840	Lot 885	1	Residential	1	-	1000G
181840	Lot 887	1	Residential	1	-	1000G
181840	Lot 892	1	Residential	1	-	1000G
181840	Lot 896	1	Residential	1	1.50	1000G
181840	Lot 898	1	Residential	1	0.75	1000G
181840	Lot 90	1	Residential	1	0.75	1000G
181840	Lot 91	1	Residential	1	3.00	1000G
181840	Lot 910	1	Residential	1	1.50	1000G
181840	Lot 924	1	Residential	1	1.50	1000G
181840	Lot 940	1	Residential	1	0.75	1000G
181840	Lot 942	1	Residential	1	0.75	1000G
181840	Lot 944	1	Residential	1	-	1000G
181840	Lot 948	1	Residential	1	0.75	1000G
181840	Lot 950	1	Residential	1	-	1000G
181840	Lot 953	1	Residential	1	2.25	1000G
181840	Lot 954	1	Residential	1	-	1000G
181840	Lot 957	1	Residential	1	-	1000G
181840	Lot 965	1	Residential	1	-	1000G
181840	Lot 970	1	Residential	1	-	1000G
181840	Lot 972	1	Residential	1	-	1000G
181840	LOT 1046	1	Residential	1	0.75	1000G
181840	LOT 1058	1	Residential	1	-	1000G
181840	LOT 1059	1	Residential	1	0.75	1000G
181840	LOT 1148	1	Residential	1	3.75	1000G
181840	LOT 1332	1	Residential	1	-	1000G
181840	LOT 1399	1	Residential	1	0.75	1000G
181840	LOT 526	1	Residential	1	-	1000G
181840	LOT 662	1	Residential	1	-	1000G
181840	LOT 75	1	Residential	1	-	1000G
181840	LOT 82	1	Residential	1	-	1000G
181840	LOT 890	1	Residential	1	-	1000G

Northern Division KYPipe Model Meter Route Information

Northern Division Meter Usage Summary for May 2011

Meter Route	Street Name	Rate Class	Rate Description	Bill Count	Usage	Unit of Measure
181840	LOT 945	1	Residential	1	-	1000G
181840	Maintence Barn	1	Residential	1	-	1000G
181840	1396 Lakeshore	1	Residential	1	-	1000G
181840	LOT 644	2	Commercial	1	1.50	1000G
191941	Breck	1	Residential	9	18.75	1000G
191941	BRECK	1	Residential	2	1.50	1000G
191941	Cross Road	1	Residential	6	27.00	1000G
191941	CROSS ROAD	1	Residential	1	7.50	1000G
191941	Fortner Ridge	1	Residential	12	29.25	1000G
191941	FORTNER RIDGE	1	Residential	1	3.75	1000G
191941	Hwy 330	1	Residential	41	149.25	1000G
191941	HWY 330	1	Residential	4	14.25	1000G
191941	Keefer	1	Residential	4	10.50	1000G
191941	Morgan Creek	1	Residential	2	0.75	1000G
191941	Mussel Shoals	1	Residential	8	15.75	1000G
191941	Old Mill	1	Residential	6	14.25	1000G
191941	Owenton	1	Residential	2	3.75	1000G
191941	Sharp	1	Residential	1	3.00	1000G
191941	Tommy Reed	1	Residential	1	4.50	1000G
202041	Dog Walk	1	Residential	3	11.25	1000G
202041	Dogwalk	1	Residential	2	4.50	1000G
202041	Dudley	1	Residential	2	9.00	1000G
202041	Dudley Pike	1	Residential	5	48.75	1000G
202041	Glass	1	Residential	11	21.75	1000G
202041	Hwy 330	1	Residential	3	9.75	1000G
202041	HWY 330	1	Residential	1	1.50	1000G
202041	Leaning Oak	1	Residential	32	69.75	1000G
202041	Lee	1	Residential	4	3.75	1000G
202041	LEANING OAK	1	Residential	2	8.25	1000G
202041	LEE	1	Residential	1	0.75	1000G
202041	New Columbus	1	Residential	1	1.50	1000G
202041	New Columbus	1	Residential	47	132.00	1000G
202041	NEW COLUMBUS	1	Residential	6	22.50	1000G
202041	Owenton	1	Residential	2	4.50	1000G
202041	OWENTON	1	Residential	1	1.50	1000G
202041	Pleasant Grove	1	Residential	2	4.50	1000G
202041	Timberwood	1	Residential	1	-	1000G
202041	WILD DEER	1	Residential	1	3.75	1000G
212141	CULPEPPER	1	Residential	1	1.50	1000G
212141	Doe Run	1	Residential	1	-	1000G
212141	Fox Trail	1	Residential	1	3.75	1000G
212141	Jones	1	Residential	6	17.25	1000G
212141	Natlee-Slatin	1	Residential	7	39.00	1000G
212141	New Columbus	1	Residential	1	9.00	1000G
212141	NATLEE-SLATIN	1	Residential	1	6.00	1000G
212141	NEW COLUMBUS	1	Residential	3	1.50	1000G
212141	Pleasant Grove	1	Residential	27	66.75	1000G
212141	PLEASANT GROVE	1	Residential	3	13.50	1000G
212141	Rockdale	1	Residential	18	75.75	1000G
212141	Pleasant Grove	2	Commercial	1	3.00	1000G

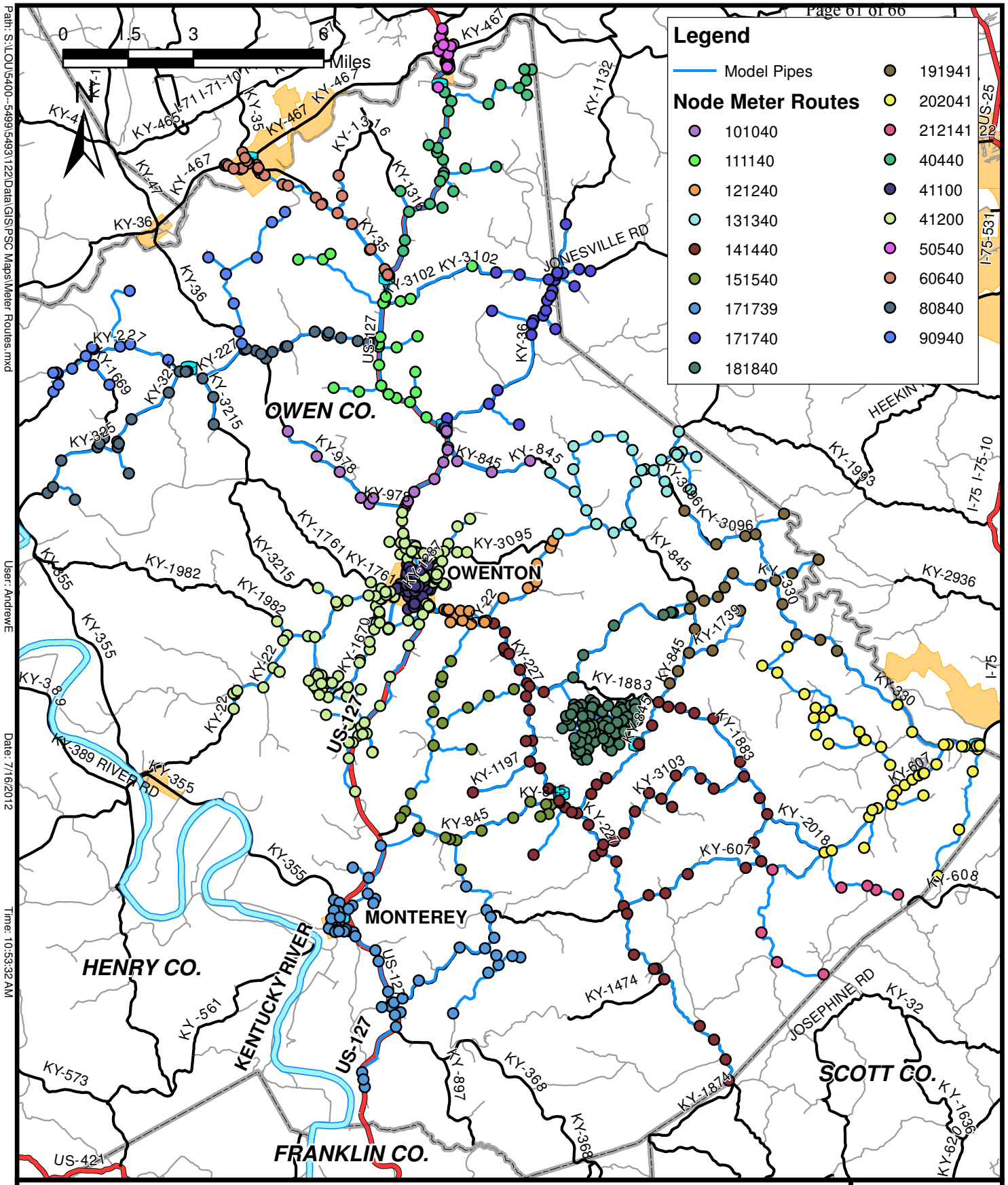

NORTHERN DIVISION MODEL
JUNCTION METER ROUTES

KENTUCKY AMERICAN WATER
LEXINGTON, KENTUCKY

STRAND ASSOCIATES®

5493.122

Path: S:\LOU\5400--5499\5493\122\Data\GIS\PSC Maps\Meter Routes.mxd
User: AndrewE
Date: 7/16/2012
Time: 10:53:32 AM

Monterey Tank

Title: Trend Viewer

Computer Name: KY1J15JMWZB30H

Date: 8/15/2011 2:11:21 PM

Status: Freeze Mode

Data Period: 1:0:0:0.0 (dd:hh:mm:ss.msecs)

Data Rate: 0:0:5:0.-89700000 (dd:hh:mm:ss.msecs)

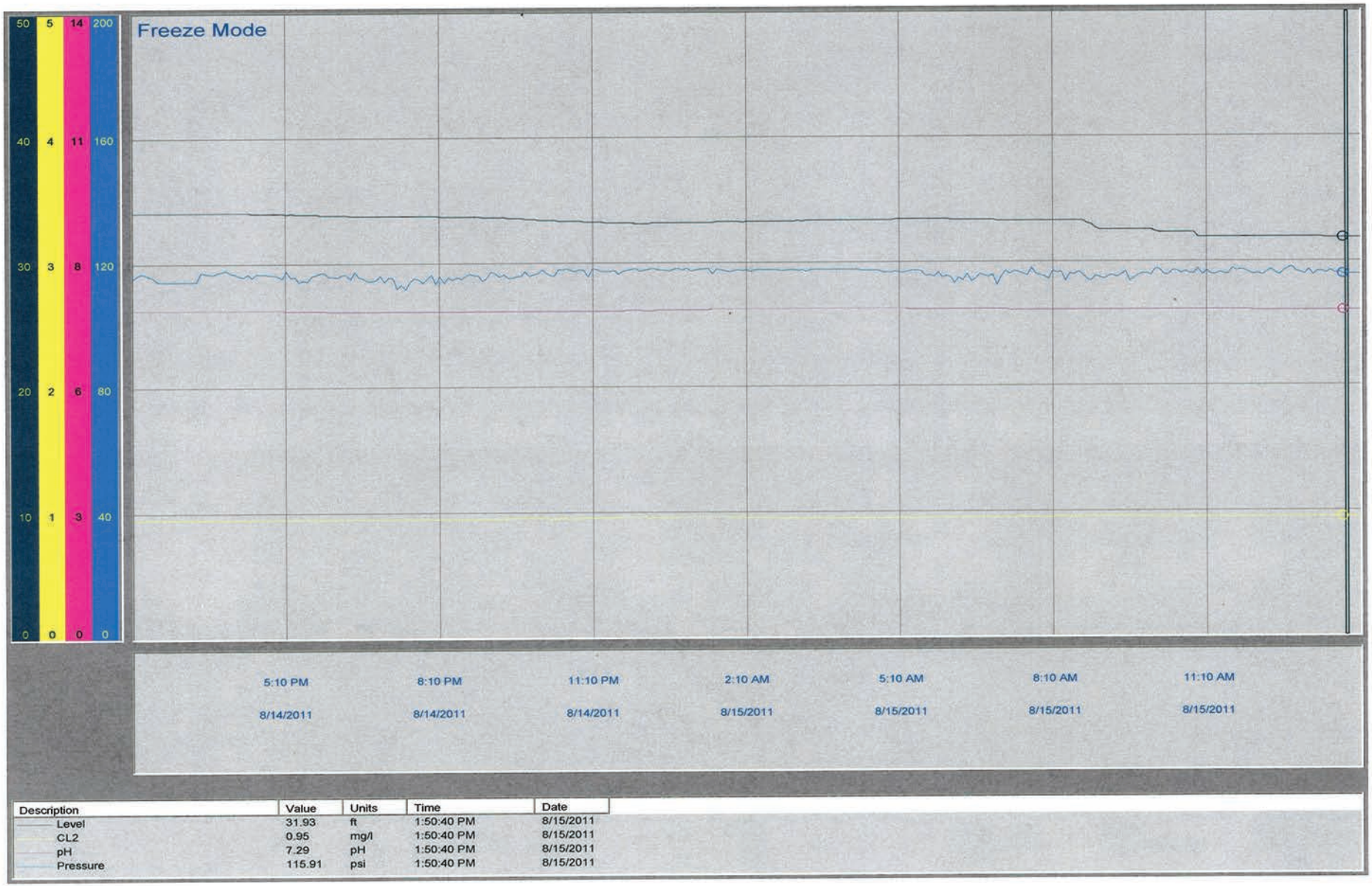

Description	Value	Units	Time	Date
Level	31.93	ft	1:50:40 PM	8/15/2011
CL2	0.95	mg/l	1:50:40 PM	8/15/2011
pH	7.29	pH	1:50:40 PM	8/15/2011
Pressure	115.91	psi	1:50:40 PM	8/15/2011

Perry Trend

Title: Trend Viewer
Computer Name: KY1J15JMWZB30H
Date: 8/15/2011 2:09:45 PM

Status: Freeze Mode
Data Period: 1:0:0:0.0 (dd:hh:mm:ss.msecs)
Data Rate: 0:0:5:0.-89700000 (dd:hh:mm:ss.msecs)

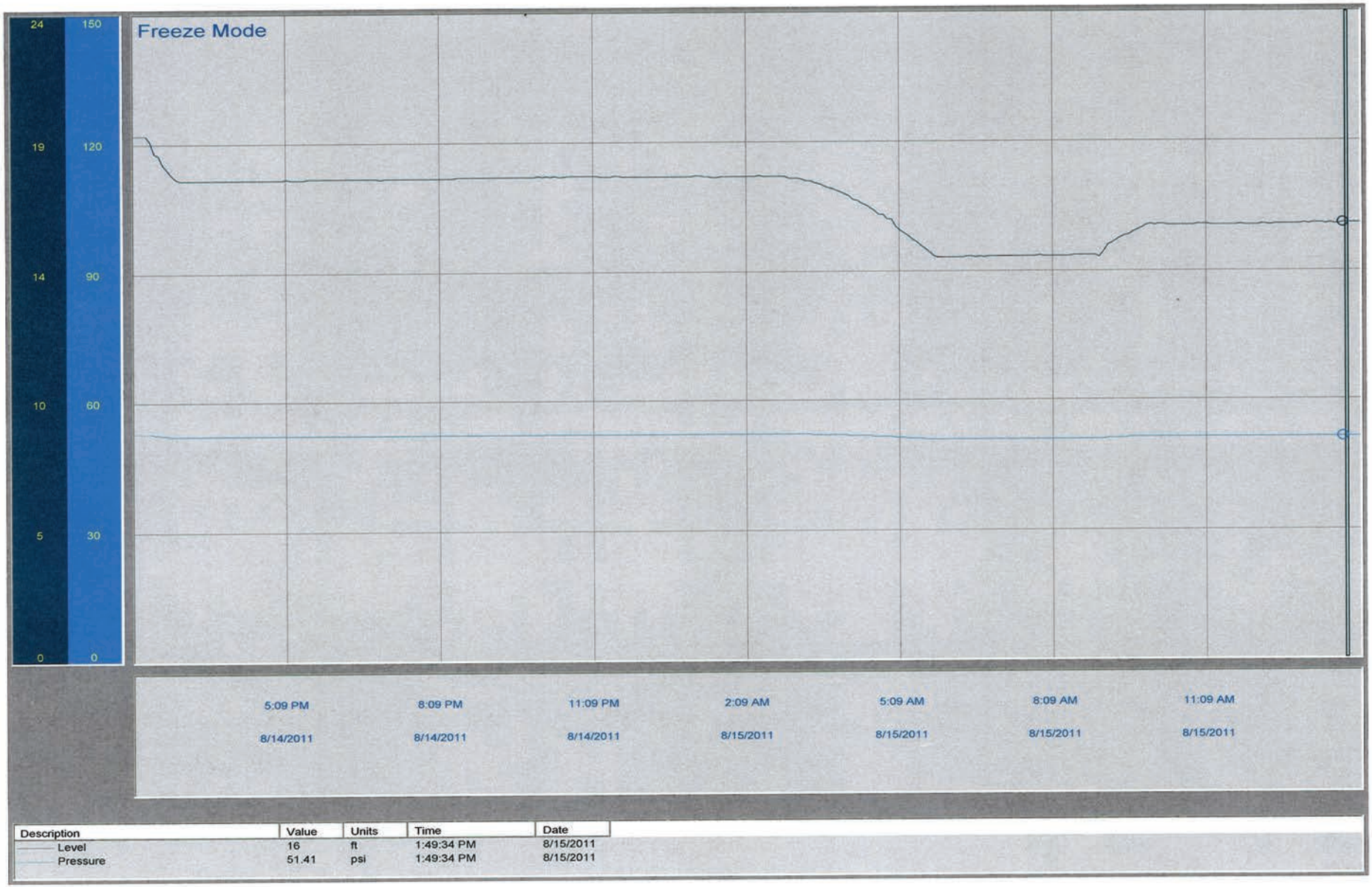

Description	Value	Units	Time	Date
Level	16	ft	1:49:34 PM	8/15/2011
Pressure	51.41	psi	1:49:34 PM	8/15/2011

Fairgrounds

Title: Trend Viewer
Computer Name: KY1J15JMWZB30H
Date: 8/15/2011 2:08:47 PM

Status: Freeze Mode
Data Period: 1:0:0:0.0 (dd:hh:mm:ss.msecs)
Data Rate: 0:0:5:0.-89700000 (dd:hh:mm:ss.msecs)

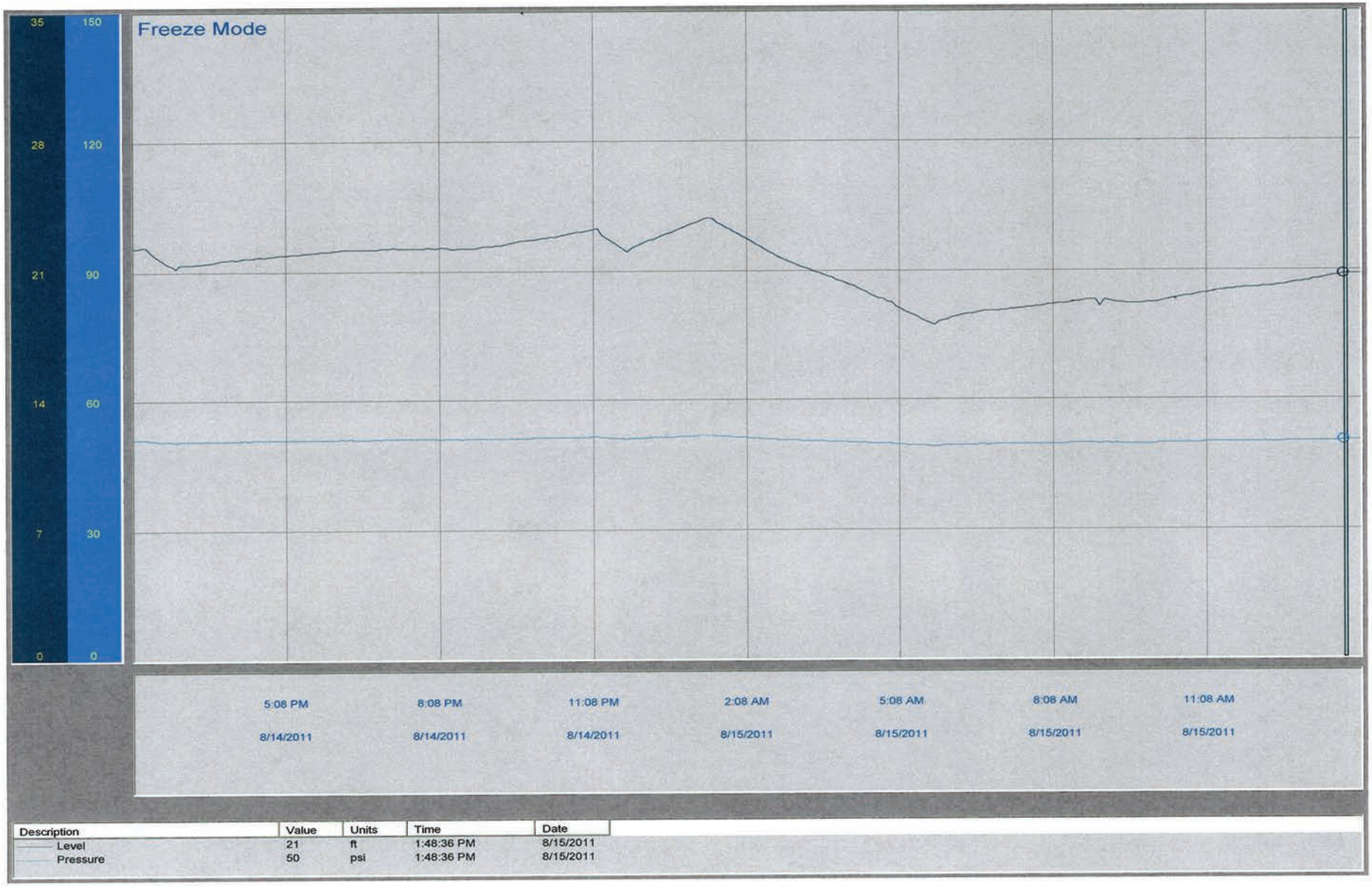

Wheatley

Title: Trend Viewer
Computer Name: KY1J15JMWZB30H
Date: 8/15/2011 2:08:15 PM

Status: Freeze Mode
Data Period: 1:0:0:0.0 (dd:hh:mm:ss.msecs)
Data Rate: 0:0:5:0.-89700000 (dd:hh:mm:ss.msecs)

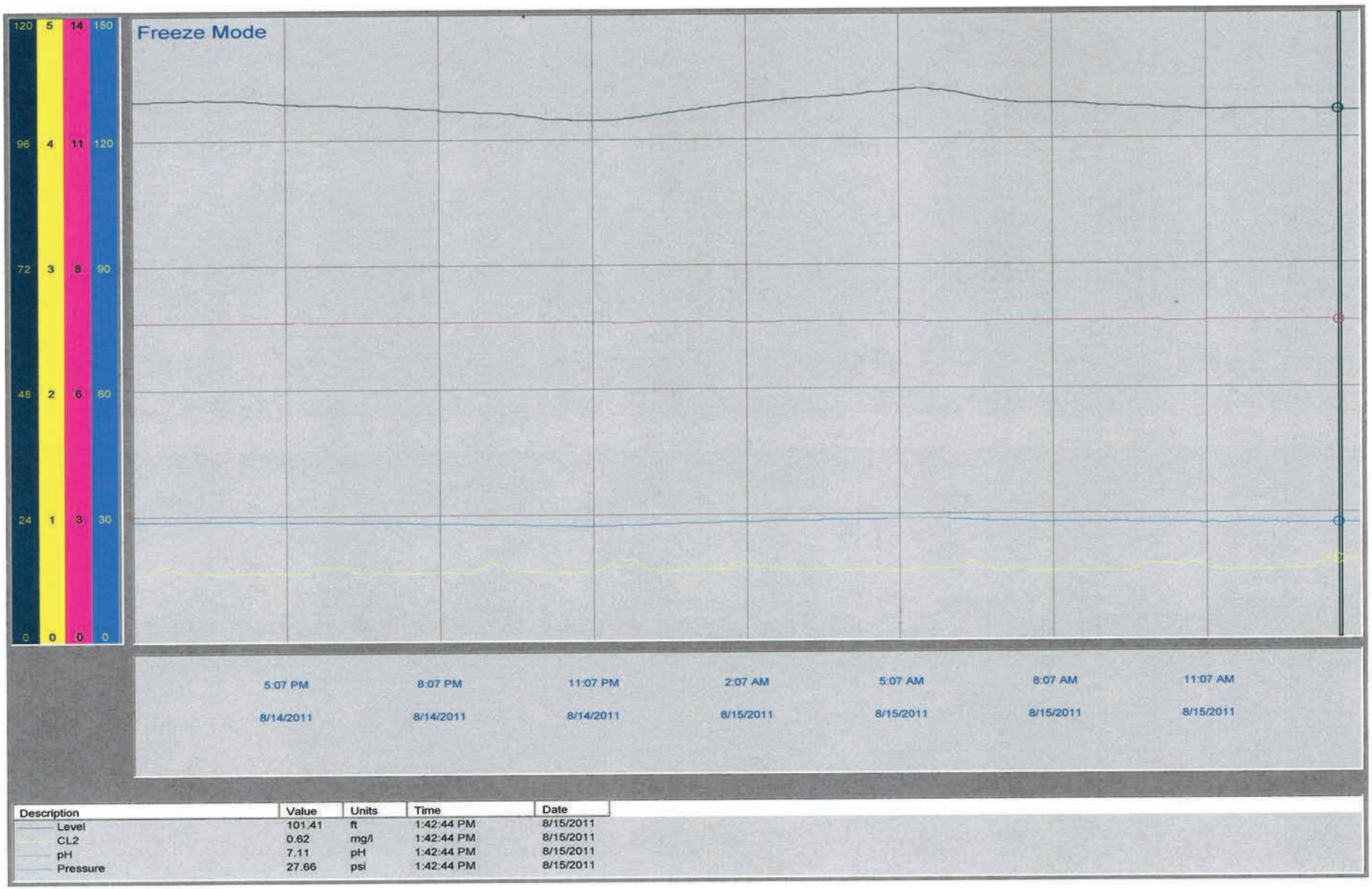

Description	Value	Units	Time	Date
Level	101.41	ft	1:42:44 PM	8/15/2011
CL2	0.62	mg/l	1:42:44 PM	8/15/2011
pH	7.11	pH	1:42:44 PM	8/15/2011
Pressure	27.66	psi	1:42:44 PM	8/15/2011

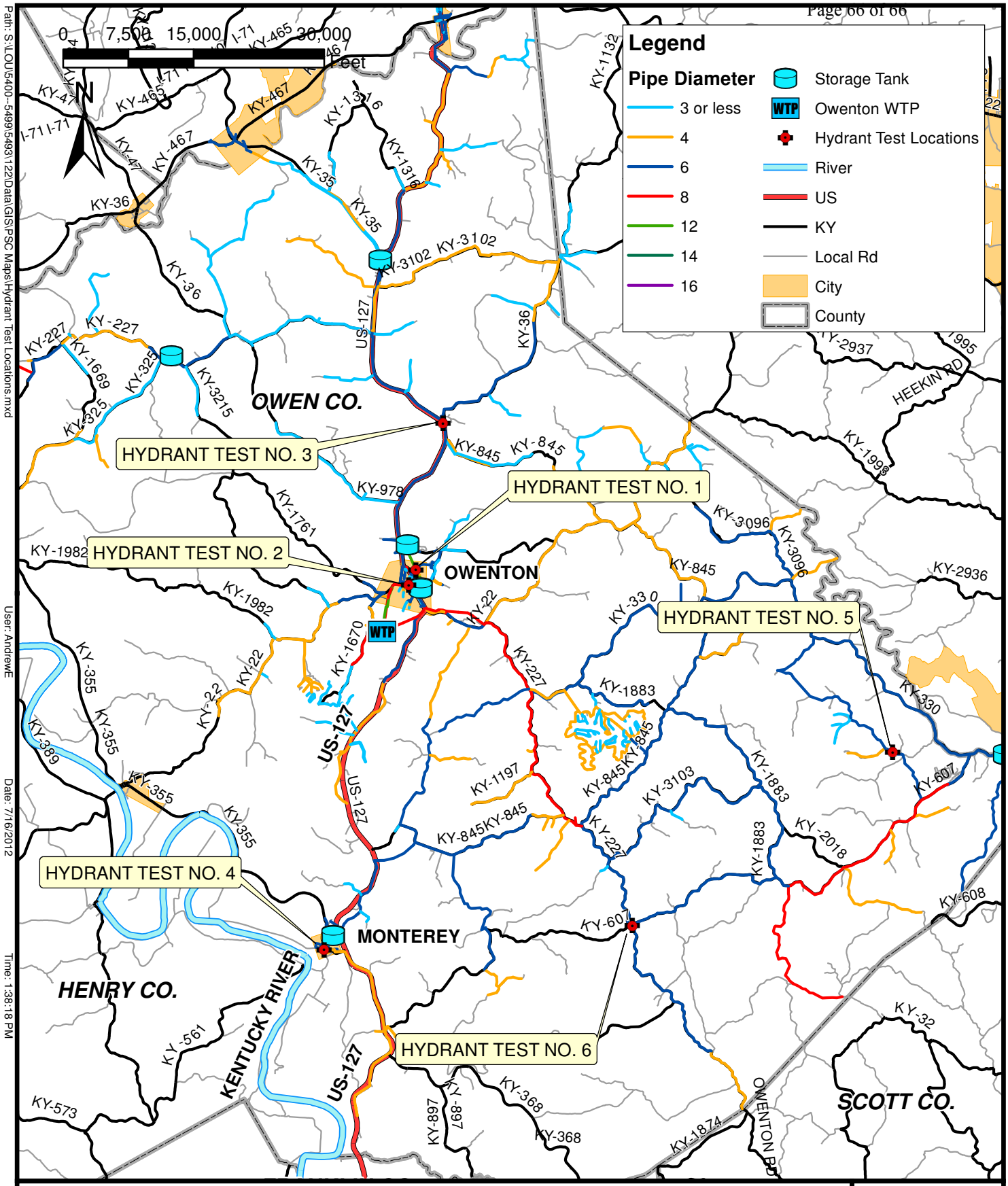

Path: S:\LOU\5400--5499\5493\122\Data\GIS\PSC Maps\Hydrant Test Locations.mxd
User: AndrewE
Date: 7/16/2012
Time: 1:38:18 PM

NORTHERN DIVISION
HYDRANT TEST LOCATIONS

KENTUCKY AMERICAN WATER
LEXINGTON, KENTUCKY

STRAND ASSOCIATES®

5493.122

KENTUCKY-AMERICAN WATER COMPANY
CASE NO. 2012-00096
COMMISSION STAFF'S FIRST REQUEST FOR INFORMATION

Witness: Lance Williams

9. Identify the persons who prepared "Engineering Feasibility Study Report for Supplying Kentucky American Water's Northern District Distribution System" and provide each person's curriculum vitae.

Response:

- Lance E. Williams, PE (see attached resume)
- Linda C. Bridwell, PE (see attached resume)
- Jason M. Hurt, PE (see attached resume)

Resume

Lance E. Williams

2300 Richmond Road
Lexington, Kentucky 40502
(859) 268-6316 (w)
(859) 321-8235 (c)
lance.williams@amwater.com

EDUCATION

May 2012 — Masters of Business Administration, Midway College

August 1990 — Bachelor's of Science Civil Engineering, West Virginia University Institute of Technology

EMPLOYMENT

June 2008 – Present — American Water, 2300 Richmond Road, Lexington, KY 40502

Director of Engineering
Kentucky and Tennessee

Responsible for the coordination of the Engineering Department for Kentucky, which includes planning, development, and implementation of all aspects of capital construction projects

Accountable for the capital budget (approximate annual budget $20 million) to within +/- 3% as well as re-forecasting monthly spend

Develop and maintain 5-year plan for maintenance, construction projects and system needs

Manage main extensions and new development, water treatment plant upgrades, new construction, and network facilities improvements

Coordinate the provision of technical assistance to all other company departments as needed and oversee the capital budget development and implementation

Develop employees into influential leaders in their profession as well as our community

October 2003 – June 2008 — CONTECH Bridge Solutions Inc., 2300 Hurstbourne Village, Suite 400, Louisville, KY 40299

KY Region Manager

Promotion of MULTI-PLATE, CON/SPAN, BEBO, and Truss Bridge System over competing products by using PowerPoint presentations and developing relationships with engineers in both municipal and private markets

Developed new specifications and standards for use with the Kentucky Transportation Cabinet for three-sided, pre-cast concrete culverts

Promotion of StormVault water quality device due to the recent EPA regulations, also responsible for local municipal approval

Estimates for materials for MULTI-PLATE, CON/SPAN, BEBO, and Truss Bridge Systems as well as construction cost for installation

Responsible for all quotes as well as profit for all projects bidding in the state of Kentucky

Developed tracking methods for scheduled meetings and projects

Conducted national training sessions on time management and client prioritization, being pro-active and not reactive and how to manage time in a reactive situation

Managed multiple projects from conception to construction; during this period updated estimates, construction coordination, trucking logistics, construction management, tracking of permits from regulatory agencies as required

Monthly reporting to corporate office about marketing and sales activity within Kentucky

Other duties include, but are not limited to the following:

- administrative reports
- contract negotiation
- public speaking/technical presentation
- preparing statement of qualification
- meetings/following up
- technical seminars
- pre-construction meetings
- installation coordination/installation consultant

October 1990 – October 2003

Howard K. Bell Consulting Engineers, Inc.
Civil/Environmental Engineering Department
Lexington, Kentucky

Marketing Director

Supervised others to meet deadlines for Statement of Qualification and Proposals

Facilitated the relationship between existing clients and potential clients while creating a business development plan for the company

Created company brochures used for marketing and education

Organized golf scrambles, tradeshow activities and other marketing promotions

Project Manager/
Project Engineer

Project Manager and Lead Design Engineer for a water treatment plant for Providence, Kentucky. The water treatment plant design included: new operations/administration building, chemical feeders, two ACTIFLO trains, disinfectant contact basin, filters, high service pump station, and a 500,000 gallon standpipe.

Project Manager and client contact during design and construction of approximately 9 miles of 12-inch ductile iron and PVC raw water line, installation of vertical turbine pumps and controls for the raw water intake, installation of vertical turbine pumps and controls for the booster pump station, and the installation of the telemetry system for the City of Lancaster, Kentucky.

Project Manager and Construction Manager for water treatment plant expansion and system improvement for Flatwoods-Canoe Run Public Service District, Sutton, West Virginia. Major work items included in contract: construction of a new presettling basin, construction of a new flocculation/sedimentation/filtration basin and replacement of high service pumps at water treatment plant.

Assistant Project Manager for South Putnam Public Service District, Scott Depot, West Virginia. Projects included the design for approximately 24,700 L.F. of 4-inch, 6-inch, and 8-inch water lines together with all necessary appurtenances, one 100,000-gallon water storage tank, one 100 gpm booster pump station.

Project Manager and Lead Design Engineer for water and wastewater utilities for the new Montgomery County Elementary School. Funding for these projects was through Rural Development. Responsibilities included coordinating present demand with future needs of the City of Mt. Sterling, liaison with all parties involved in the project, budgeting and time management.

Assistant Project Manager and Project Engineer for hazardous and non-hazardous solid waste projects. Responsibilities included budgeting, deadline and personnel management, technical, marketing and public relations decisions and extensive dealing with the Kentucky Natural Resources and Environmental Protection Cabinet (all divisions) during permitting processes. Highlighted projects included:

- Assistant Project Manager during the construction permit process for the City of Hopkinsville and Daviess and Nelson County Contained Landfills (three phase application process)

- Project Engineer for the closure of five landfills, including contract documents, construction management, QAQC of low permeability clay, and regulatory issues
- Development of Phase II Solid waste management plans for the following counties: Hancock, Daviess, Ohio, Webster, Henderson, Union, and McLean Counties
- Development of a Conceptual Plan for proposed solid waste disposal facilities for Nelson County contained and construction/demolition debris landfills
- Project Engineer for United States Post Office Underground Storage Tank (UST) removal in Ohio, Kentucky and Indiana
- RPR for water works improvements in Paintsville and Mt. Sterling, Kentucky

1985 -1990 West Virginia Highway Department

Various project management responsibilities relating to highway construction

REGISTRATIONS Professional Engineer: Kentucky and West Virginia

COMMUNITY INVOLVEMENT

1985 – Current American Society of Civil Engineers
- Member
- Volunteer for Habitat for Humanity
- Volunteer for UK Arboretum
- Vice President 2008/2009
- President 2009/2010

2000 – Current American Society of Professional Engineers
- Member
- Membership Committee
- Leadership PE Selection Committee
- MathCounts Competition Committee Chair

2008 – Current American Water Works Association
- Member
- Planning Committee for 2009 Conference

2007 – Current UK Children's Hospital
- Volunteer for Rolex Three Day Event

2010 – Current Hope Center
- Board of Directors

PROFESSIONAL AND PERSONAL REFERENCES AVAILABLE UPON REQUEST

LINDA C. BRIDWELL, PE
Kentucky American Water
(859) 268-6373
linda.bridwell@amwater.com

AMERICAN WATER – Lexington, KY

Central Division Manager Rates and Regulation, KY and TN (February 2012 to present)
Kentucky American Director Water Quality & Environmental Compliance (October 2010 - February 2012)
Kentucky American Project Delivery Manager, Water Supply (June 2008 to October 2010)
Southeast Region Project Delivery Manager (July 2004-December 2007)
Kentucky American Director of Engineering (January 1998 to July 2004, December 2007 to June 2008)
Kentucky American Director, Bluegrass Water Project (January 1999 to December 1999)
Kentucky American Engineering Manager (July 1995 to January 1998)
Kentucky American Planning Engineer (February 1990 to July 1995)
Kentucky American Distribution Supervisor (May 1989 to February 1990)

Highly experienced manager who has demonstrated the ability to lead diverse teams to plan, direct and promote infrastructure development at Kentucky American Water with full responsibility for regulatory compliance and interaction, personnel development, budgetary management, safety and environmental issues, quality control, business development, operations support, and strategic planning. Proven ability in working with teams to meet critical business objectives for over 22 years. Strong skills in developing internal and external business relationships for team success. Lead the delivery of the largest project in the history of the company at $163 million.

Highlights:

Regulatory Interaction: Presented written and/or oral testimony on at least thirteen separate cases to the Kentucky Public Service Commission and have been actively involved in rate case development. Filed written testimony with Tennessee Regulatory Authority. Completed responses to hundreds of interrogatories, assisted in development of briefs, and developed drought tariff. Have helped align business objectives to meet rate case timing and support. Responsible for four successful applications for Certificates of Convenience and Necessity with the Kentucky Public Service Commission. Successfully negotiated withdrawal permits from Division of Water and conservation program. Also presented testimony in Revenue Cabinet hearing.

Financial: Developed a procedure for capital prioritization and budget implementation, which prioritized limited funds, and maintained low rates for customers. Responsible for progressive increase in budget implementation from 85% to 103% average over five years. Assisted in acquisition of 6,600 customers in three years (7% customer growth) and involved in negotiations for water sales to five other utilities. Responsible for coordinating $163 million budget for three-year project and assisted in the acquisition and administration of $91 million in tax-exempt financing for the project.

Public Relations: Made numerous public presentations on central Kentucky water supply issues. The presentations included several controversial public meetings. Have frequently served as media spokesperson for water supply issues including during periods of restrictions. Met with Kentucky congressional delegates and state representatives to address water supply issue and served as liaison with elected officials on continued water supply issues.

Team Working: Served on contentious Fayette County Water Supply Council and helped bring final report required by the Division of Water to its successful filing. Served as Kentucky American representative to the Bluegrass Water Supply Consortium, which involved developing a regional water supply solution with ten municipal water utilities. Developed focus groups within department to address

specific challenges using formal team approach. Utilized team partnering approach for delivering new water treatment plant with three separate construction contractors, and multiple professional support teams. Strong interaction with regulatory agencies in developing permits and filings. Worked with operations team to develop training and heightened environmental compliance. Currently managing rate case request for Tennessee American Water working with Central Division Rates team and TAW personnel.

Staff Development: Improved engineers' operational knowledge through cross training program. Developed program for intra-department communications. Instigated process improvement effort within engineering team.

Project Management: Responsible for the coordination of twenty-five professional organizations involved in the construction of the new water treatment plant on the Kentucky River. Project was completed on time, and within 0.1% of budget. Coordination responsibilities included easement acquisition, legal challenges, contract administration, community relations, engineering and budget.

EDUCATION

Masters of Business Administration, Xavier University, Cincinnati, Ohio.

Master of Science in Civil Engineering, University of Kentucky, Lexington, Kentucky.

Bachelor of Science Degree in Civil Engineering. University of Kentucky, Lexington, Kentucky.

Registered Professional Engineer – Kentucky #17603

PROFESSIONAL MEMBERSHIPS

American Society of Civil Engineers: Kentucky Section Vice-President, Bluegrass Branch President
Kentucky Society of Professional Engineers: Bluegrass Chapter Director, Awards Committee Chairman
American Water Works Association
Have served since 2004 on the Kentucky Infrastructure Authority

HONORS

Appointed by Governor Patton to the Kentucky Water Resource Development Commission.
Appointed to the Kentucky Water Resources Research Institute Advisory Committee.
Received Daniel Meade Zone II Award for Outstanding Paper of American Society of Civil Engineers.
Co-recipient 2000 University of Kentucky Outstanding Young Civil Engineer
Received 2010 Kentucky Section ASCE Robert Gillim Award for service to the Civil Engineering profession
Received 2011 Lyle Sendlein Award from the Kentucky Water Resources Research Institute for Outstanding Contribution in Water Practice.
Named 2010 Women Leading Central Kentucky
Named 2011 Civil Engineering "Power List" for achievement in the profession

COMMUNITY AND CIVIC INVOLVEMENT

Central Christian Church Childcare Center Board of Directors
Girl Scout Troop 870 Leader
University of Kentucky Civil Engineering Industrial Advisory Committee Alumnus
Hospice of the Bluegrass Daniel's Care Advisory Committee

Resume

Jason M. Hurt, PE

2300 Richmond Road
Lexington, Kentucky 40502
(859) 335-3415 (w)
(859) 537-0748 (c)
jason.hurt@amwater.com

EDUCATION

May 1998 — Bachelor of Science in Civil Engineering, magna cum laude
University of Evansville, Evansville, Indiana

EMPLOYMENT

August 2011 – Present
Senior Project Engineer

June 2006 – August 2011
Engr. Project Manager

Kentucky American Water
2300 Richmond Road
Lexington, KY 40502

Responsible for the management and coordination of various capital investment projects for Kentucky American Water from project initiation through project implementation, including project planning, design, easement acquisition, permitting, bidding, construction, and start-up.

Manage Kentucky American Water's main extension and fire service installation program, including coordination with the development community for the design and installation of main extensions to serve new construction and developments.

Responsible for the design and implementation of Kentucky American Water's Main Replacement/Relocation Projects including the development of Kentucky American Water's Main Replacement Prioritization Model.

Manage and coordinate consultant services and contractor services on various capital investment projects.

Coordinate and oversee the inspection efforts for Kentucky American Water's main replacement, main relocation, and main extension programs.

May 1998 – June 2006
Project Manager

Quest Engineers, Inc.
2517 Sir Barton Way
Lexington, KY 40509

Responsible for the management of the production of all projects within the Civil/Site Department, including industrial, residential, commercial, and retail development projects.

Managed project resources, progress, critical deadlines, and budget to increase overall project efficiency and quality.

Oversaw inspection of construction projects and coordinated construction related issues.

Performed full range of Civil/Site design, including project plan and specification preparation, permitting and bidding.

REGISTRATIONS

Registered Professional Engineer with the Commonwealth of Kentucky

COMMUNITY INVOLVEMENT

1994 – Current

American Society of Civil Engineers

- Member
- Student Chapter Officer 1997/1998
- Secretary of Local Chapter 2011/2012
- Vice President of local Chapter 2012/2013

2009 – Current

United Way of the Bluegrass

- Employee Campaign Committee Member 2009-2012
- Employee Campaign Committee Chair 2011
- 'Get On Board' Graduate 2012

PROFESSIONAL AND PERSONAL REFERENCES AVAILABLE UPON REQUEST

KENTUCKY-AMERICAN WATER COMPANY
CASE NO. 2012-00096
COMMISSION STAFF'S FIRST REQUEST FOR INFORMATION

Witness: Keith Cartier

10. Provide the current water withdrawal permit for the Kentucky River Station II ("KRS II") water treatment plant.

Response:

Please see the attached.

ERNIE FLETCHER
GOVERNOR

ENVIRONMENTAL AND PUBLIC PROTECTION CABINET
DEPARTMENT FOR ENVIRONMENTAL PROTECTION
DIVISION OF WATER
14 REILLY ROAD
FRANKFORT, KENTUCKY 40601
www.kentucky.gov

Teresa J. Hill
SECRETARY

January 10, 2007

Dillard Griffin
Kentucky American Water Co
2300 Richmond Rd.
Lexington, KY 40502

Water Withdrawal Permit: #1572
Activity ID Number: APE20060038

Dear Mr. Griffin:

Thank you for your application for a revised water withdrawal permit. This letter accompanies permit #1572 which authorizes withdrawals from the Kentucky River at river mile 47.8 (pool 3) located in Franklin County with geographic coordinates of latitude 38° 21' 22.16" longitude 84° 52' 29.89".

In accordance with this permit, water withdrawals are limited to the following rates from the specified location:

Jan. <=6.0 MGD (MA)	**April <=6.0 MGD (MA)**	**July <=20.0 MGD (MA)**	**Oct. <=6.0 MGD (MA)**
Feb. <=6.0 MGD (MA)	**May <=6.0 MGD (MA)**	**Aug. <=20.0 MGD (MA)**	**Nov. <=6.0 MGD (MA)**
March <=6.0 MGD (MA)	**June <=20.0 MGD (MA)**	**Sept. <=6.0 MGD (MA)**	**Dec. <=6.0 MGD (MA)**

Please refer to the enclosed permit which specifies all conditions associated with this withdrawal, including monitoring and compliance requirements.

The issuance of this permit does not release you from the obligation of obtaining any and all other permits that may be required by this Division or other regulatory agencies.

If you have any questions, please contact Chris Yeary or Rita Hockensmith at (502) 564-3410.

Issued this 10th day of January 2007.

By: _____
Peter T. Goodmann, Manager
Watershed Management Branch
Division of Water

PTG:cy
Enclosure
cc: Frankfort Regional Office

Permit to Withdraw Public Water
KY American Water Co
Facility Requirements
Permit Number:1572
Activity ID No.: APE20060038

Limitation Requirements:

Condition No.	Item ID	Parameter	Condition
L-1	GACT200 (1572 Kentucky River)	Withdrawal	Withdrawal <= 6.0 MGD (MA) shall be allowed from the location specified in the Narrative Requirements below. [KRS 151.170] This requirement is applicable during the following months: January. Statistical basis: Daily maximum (MX).
L-2	GACT200 (1572 Kentucky River)	Withdrawal	Withdrawal <= 6.0 MGD (MA) shall be allowed from the location specified in the Narrative Requirements below. [KRS 151.170] This requirement is applicable during the following months: February. Statistical basis: Daily maximum (MX).
L-3	GACT200 (1572 Kentucky River)	Withdrawal	Withdrawal <= 6.0 MGD (MA) shall be allowed from the location specified in the Narrative Requirements below. [KRS 151.170] This requirement is applicable during the following months: March. Statistical basis: Daily maximum (MX).
L-4	GACT200 (1572 Kentucky River)	Withdrawal	Withdrawal <= 6.0 MGD (MA) shall be allowed from the location specified in the Narrative Requirements below. [KRS 151.170] This requirement is applicable during the following months: April. Statistical basis: Daily maximum (MX).
L-5	GACT200 (1572 Kentucky River)	Withdrawal	Withdrawal <= 6.0 MGD (MA) shall be allowed from the location specified in the Narrative Requirements below. [KRS 151.170] This requirement is applicable during the following months: May. Statistical basis: Daily maximum (MX).
L-6	GACT200 (1572 Kentucky River)	Withdrawal	Withdrawal <= 20.0 MGD (MA) shall be allowed from the location specified in the Narrative Requirements below. [KRS 151.170] This requirement is applicable during the following months: June. Statistical basis: Daily maximum (MX).
L-7	GACT200 (1572 Kentucky River)	Withdrawal	Withdrawal <= 20.0 MGD (MA) shall be allowed from the location specified in the Narrative Requirements below. [KRS 151.170] This requirement is applicable during the following months: July. Statistical basis: Daily maximum (MX).
L-8	GACT200 (1572 Kentucky River)	Withdrawal	Withdrawal <= 20.0 MGD (MA) shall be allowed from the location specified in the Narrative Requirements below. [KRS 151.170] This requirement is applicable during the following months: August. Statistical basis: Daily maximum (MX).

Permit to Withdraw Public Water
KY American Water Co
Facility Requirements
Permit Number:1572
Activity ID No.: APE20060038

Limitation Requirements:

Condition No.	Item ID	Parameter	Condition
L-9	GACT200 (1572 Kentucky River)	Withdrawal	Withdrawal <= 6.0 MGD (MA) shall be allowed from the location specified in the Narrative Requirements below. [KRS 151.170] This requirement is applicable during the following months: September. Statistical basis: Daily maximum (MX).
L-10	GACT200 (1572 Kentucky River)	Withdrawal	Withdrawal <= 6.0 MGD (MA) shall be allowed from the location specified in the Narrative Requirements below. [KRS 151.170] This requirement is applicable during the following months: October. Statistical basis: Daily maximum (MX).
L-11	GACT200 (1572 Kentucky River)	Withdrawal	Withdrawal <= 6.0 MGD (MA) shall be allowed from the location specified in the Narrative Requirements below. [KRS 151.170] This requirement is applicable during the following months: November. Statistical basis: Daily maximum (MX).
L-12	GACT200 (1572 Kentucky River)	Withdrawal	Withdrawal <= 6.0 MGD (MA) shall be allowed from the location specified in the Narrative Requirements below. [KRS 151.170] This requirement is applicable during the following months: December. Statistical basis: Daily maximum (MX).

Monitoring Requirements:

Condition No.	Item ID	Parameter	Condition
M-1	GACT200 (1572 Kentucky River)	Withdrawal	The permittee shall measure Withdrawal monitored by meter or other approved method daily as described in the Narrative Requirements below. [401 KAR 4:010 Section 3] This requirement is applicable during the following months: January. Statistical basis: Daily maximum (MX).
M-2	GACT200 (1572 Kentucky River)	Withdrawal	The permittee shall measure Withdrawal monitored by meter or other approved method daily as described in the Narrative Requirements below. [401 KAR 4:010 Section 3] This requirement is applicable during the following months: February. Statistical basis: Daily maximum (MX).

Monitoring Requirements:

Condition No.	Item ID	Parameter	Condition
M-3	GACT200 (1572 Kentucky River)	Withdrawal	The permittee shall measure Withdrawal monitored by meter or other approved method daily as described in the Narrative Requirements below. [401 KAR 4:010 Section 3] This requirement is applicable during the following months: March. Statistical basis: Daily maximum (MX).
M-4	GACT200 (1572 Kentucky River)	Withdrawal	The permittee shall measure Withdrawal monitored by meter or other approved method daily as described in the Narrative Requirements below. [401 KAR 4:010 Section 3] This requirement is applicable during the following months: April. Statistical basis: Daily maximum (MX).
M-5	GACT200 (1572 Kentucky River)	Withdrawal	The permittee shall measure Withdrawal monitored by meter or other approved method daily as described in the Narrative Requirements below. [401 KAR 4:010 Section 3] This requirement is applicable during the following months: May. Statistical basis: Daily maximum (MX).
M-6	GACT200 (1572 Kentucky River)	Withdrawal	The permittee shall measure Withdrawal monitored by meter or other approved method daily as described in the Narrative Requirements below. [401 KAR 4:010 Section 3] This requirement is applicable during the following months: June. Statistical basis: Daily maximum (MX).
M-7	GACT200 (1572 Kentucky River)	Withdrawal	The permittee shall measure Withdrawal monitored by meter or other approved method daily as described in the Narrative Requirements below. [401 KAR 4:010 Section 3] This requirement is applicable during the following months: July. Statistical basis: Daily maximum (MX).
M-8	GACT200 (1572 Kentucky River)	Withdrawal	The permittee shall measure Withdrawal monitored by meter or other approved method daily as described in the Narrative Requirements below. [401 KAR 4:010 Section 3] This requirement is applicable during the following months: August. Statistical basis: Daily maximum (MX).
M-9	GACT200 (1572 Kentucky River)	Withdrawal	The permittee shall measure Withdrawal monitored by meter or other approved method daily as described in the Narrative Requirements below. [401 KAR 4:010 Section 3] This requirement is applicable during the following months: September. Statistical basis: Daily maximum (MX).

03/08/07 21:14 FAX 502 564 9639 DEP DOW Watershed 005
KAW_R_PSCDR1#10_072312
Page 5 of 8

Permit to Withdraw Public Water
KY American Water Co
Facility Requirements
Permit Number:1572
Activity ID No.: APE20060038

Monitoring Requirements:

Condition No.	Item ID	Parameter	Condition
M-10	GACT200 (1572 Kentucky River)	Withdrawal	The permittee shall measure Withdrawal monitored by meter or other approved method daily as described in the Narrative Requirements below. [401 KAR 4:010 Section 3] This requirement is applicable during the following months: October. Statistical basis: Daily maximum (MX).
M-11	GACT200 (1572 Kentucky River)	Withdrawal	The permittee shall measure Withdrawal monitored by meter or other approved method daily as described in the Narrative Requirements below. [401 KAR 4:010 Section 3] This requirement is applicable during the following months: November. Statistical basis: Daily maximum (MX).
M-12	GACT200 (1572 Kentucky River)	Withdrawal	The permittee shall measure Withdrawal monitored by meter or other approved method daily as described in the Narrative Requirements below. [401 KAR 4:010 Section 3] This requirement is applicable during the following months: December. Statistical basis: Daily maximum (MX).

Record-Keeping Requirements:

Withdrawal:

Condition No.	Item ID	Condition
R-1	GACT200 (1572 Kentucky River)	The permittee shall perform Withdrawal recordkeeping by reporting water withdrawals daily on forms supplied by the Cabinet. [401 KAR 4:010 Section 2]

Permit to Withdraw Public Water
KY American Water Co
Facility Requirements
Permit Number:1572
Activity ID No.: APE20060038

Submittal/Action Requirements:

Condition No.	Item ID	Condition
S-1	GACT200 (1572 Kentucky River)	The permittee shall submit water withdrawal reporting forms: Due monthly, by the 15th of the month. [401 KAR 4:010 Section 2]

Narrative Requirements:

Condition No.	Item ID	Condition
T-1	GACT200 (1572 Kentucky River)	The Environmental and Public Protection Cabinet authorizes the above named party to withdraw Public Water of the Commonwealth of Kentucky. This permit has been issued under provisions of KRS Chapter 151.125, 151.140, and 151.150 and regulations promulgated with respect to the withdrawal of public waters. Issuance of this permit does not relieve the permittee from the responsibility of obtaining any other permits or licenses required by this Cabinet, or other state, federal, or local agencies. Withdrawals are restricted to the stated quantities, times, and locations specified above. This permit represents a limited right of use and does not vest ownership nor absolute right to withdrawal or use of Public Water, nor does it guarantee that requested amounts will be available for use at all times. In times of drought or emergency, the Cabinet my temporarily alter the conditions of the permit. Any violation of the Water Resources Act of 1966 as amended is subject to penalties as set forth in KRS 151.990 and other applicable provisions of law. [KRS 151]
T-2	GACT200 (1572 Kentucky River)	Monitoring equipment shall be calibrated annually according to the manufacturer's recommendations and a record kept to include date of calibration, calculations for percent error, and adjustments made either to the equipment or to the use of the data obtained from the equipment. Records shall be maintained and updated annually and shall be made available upon request for review by the Cabinet. [401 KAR 4:010 Section 2]
T-3	GACT200 (1572 Kentucky River)	If average monthly withdrawal amounts begin to exceed permitted amounts, or if there is any change in the location of the withdrawal site, you must contact this office immediately and request a revision. [KRS 151.170]
T-4	GACT200 (1572 Kentucky River)	The location of the authorized withdrawal is from the Kentucky River at river mile 47.8 (pool 3) in Franklin County, with coordinates: latitude 38° 21' 22.16", longitude 84° 52' 29.89". [KRS 151.170]

Permit to Withdraw Public Water
KY American Water Co
Facility Requirements
Permit Number:1572
Activity ID No.: APE20060038

Narrative Requirements:

Condition No.	Item ID	Condition
T-5	GACT200 (1572 Kentucky River)	Kentucky-American Water Company shall notify the Cabinet whenever a Drought Management Phase is declared, beginning with the Advisory phase. [401 KAR 4:010 Section 2]
T-6	GACT200 (1572 Kentucky River)	As approved, the permittee shall monitor water withdrawals by meter. [401 KAR 4:010 Section 2]
T-7	GACT200 (1572 Kentucky River)	The issue date for water withdrawal permit #1572 is January 2007. The effective date for water withdrawal permit #1572 will be June 2010. [401 KAR 4:010 Section 2]
T-8	GACT200 (1572 Kentucky River)	Quarterly progress reports shall be due thirty (30) days after the end of each calendar quarter following the issuance date of the permit. A project schedule may be amended and the permit's effective date extended up to one (1) year if the permittee demonstrates that circumstances beyond the control of the permittee have caused an unavoidable delay in the completion of the project. This water withdrawal permit shall expire and become void if the holder of the permit fails to: (a) Adhere to the project schedule as submitted at the time of permit issuance or as amended by request according to 401 KAR 4:010 Section 2 subsection 4; (b) Comply with the interim reporting requirements; or (c) Commence withdrawals within six (6) months after the permit effective date, including any extensions granted under 401 KAR 4:010 Section 2 subsection 4. . [401 KAR 4:010 Section 2]

KENTUCKY-AMERICAN WATER COMPANY
CASE NO. 2012-00096
COMMISSION STAFF'S FIRST REQUEST FOR INFORMATION

Witness: Linda C. Bridwell/Lance E. Williams

11. State the daily amount of water that Kentucky-American may withdraw from Pool 3 of the Kentucky River for KRS II.

Response:

The current Kentucky Division of Water Withdrawal Permit allows for the withdrawal of 20 mgd during the months of June, July, and August; and 6 mgd during the remaining months of the year. However, this does not limit the withdrawal from the Kentucky River to a maximum of 20 mgd for a single day. The Kentucky Division of Water generally permits withdrawals based on actual production of the plant, and will only consider requests for increased withdrawal amounts based on actual withdrawals above the permitted amount by 15% or more, for more than 30 days on average.

The existing raw water pumps at KRS II are rated for 30 mgd, so KAW could pull up to 30 mgd as long as the monthly average does not exceed the stated permitted amount of 20 mgd. KRS II has a rated capacity of 20 mgd and is capable of being safely operated at flows up to 24 mgd.

KENTUCKY-AMERICAN WATER COMPANY
CASE NO. 2012-00096
COMMISSION STAFF'S FIRST REQUEST FOR INFORMATION

Witness: Lance Williams

12.

a. State the average flow rate of water that is being treated through KRS II during summer months since KRS II began operation.
b. State the average flow rate of water that is being treated through KRS II during non-summer months since KRS II began operation.
c. State the highest flow rate of that water that can presently be treated through KRS II during summer months.
d. State the highest flow rate of that water that can presently be treated through KRS II during non-summer months.

Response:

a) The average flow rate of water that is being treated through KRS II during summer months (June, July, August) since KRS II began operation is 9.7 mgd.

b) The average flow rate of water that is being treated through KRS II during non-summer months (January, February, March, April, May, September, October, November, December) since KRS II began operation is 5.7 mgd.

c) KRS II has a rated capacity of 20 mgd and is capable of being safely operated at flows up to 24 mgd. The ability of KRS II to operate at 24 mgd is due to its pumping and filtration capacity. KRS II has five filters and with all filters in service, KRS II could produce 25 mgd. The pumps at KRS II are also sized to reliably produce 24 mgd with one unit out of service.

d) KRS II has a rated capacity of 20 mgd and is capable of being safely operated at flows up to 24 mgd. The ability of KRS II to operate at 24 mgd is due to its pumping and filtration capacity. KRS II has five filters and with all filters in service, KRS II could produce 25 mgd. The pumps at KRS II are also sized to reliably produce 24 mgd with one unit out of service.

KENTUCKY-AMERICAN WATER COMPANY
CASE NO. 2012-00096
COMMISSION STAFF'S FIRST REQUEST FOR INFORMATION

Witness: Linda C. Bridwell/Lance Williams

13. State whether supplying the Northern Division through KRS II will require Kentucky-American to seek revisions to its current water withdrawal permit for KRS II. If revisions will be required, explain why revisions will be required and describe the revisions that Kentucky-American will seek.

Response:

No, KAW does not believe that supplying the Northern Division through KRS II will require KAW to seek revisions to its current water withdrawal permit.

KENTUCKY-AMERICAN WATER COMPANY
CASE NO. 2012-00096
COMMISSION STAFF'S FIRST REQUEST FOR INFORMATION

Witness: Linda Bridwell

14. State whether supplying the Northern Division through KRS II will affect water availability to Kentucky-American's Central Division in drought or heavy use periods. If water availability to Kentucky-American's Central Division in drought or heavy use periods will be affected, describe how water availability will be affected.

Response:

The revised demand projections are attached to the response to the Attorney General's first data request, Item 29 filed in this case on July 23, 2012. The current demand projections without the Northern Division connection identify a projected average day demand in 2015 of 41.30 mgd that grows to 46.34 mgd by 2030. These projections are slightly lower than the projections in Case No. 2007-00134. The current maximum day demands with a 95% confidence interval and drought average day demands are slightly higher than in Case No. 2007-00134, however. This is due to an increase in the summer average demand over the last ten years, and an increase in the peak day/average day actual ratios in the last five years.

With regard to a drought period, the addition of supplying the Northern Division through KRS II could potentially affect the availability of water during a drought of record by increasing the overall system demands to be supplied by 2%. This is a manageable increase to overall system demands, however, and the immediate cost savings to all KAW customers, in addition to the reduced risk to the Northern Division customers, outweighs the incremental potential risk of reduced water availability during a drought of record or other extreme drought periods.

KRS II has a rated capacity of 20 mgd and is capable of being safely operated at flows up to 24 mgd. The ability of KRS II to operate at 24 mgd is due to its pumping and filtration capacity. KRS II has five filters and with all filters in service, KRS II could produce 25 mgd. The pumps at KRS II are also sized to reliably produce 24 mgd with one unit out of service.

The Kentucky Division of Water generally permits withdrawals based on actual production of the plant, and will only consider requests for increased withdrawal amounts based on actual withdrawals above the permitted amount by 15% or more, for more than 30 days on average.

With regard to heavy use periods, KAW has projected that KRS II will need to be expanded sometime between 2025 and 2030 to meet peak day demands without the addition of supplying the Northern Division through KRS II. KAW has, on occasion, operated its plants in excess of the rated plant capacities and still met all water quality standards and concurrently exceeded EPA Safe Drinking Water Partnership standards while reviewing the appropriate timing for additional plant capacity. The addition of supplying the Northern Division through KRS II would not potentially affect the availability of water during a heavy demand period, but may potentially cause the need for the plant to be expanded a year or two sooner than previously expected. The immediate cost savings to all KAW customers, in addition to the reduced risk to the Northern

KENTUCKY-AMERICAN WATER COMPANY
CASE NO. 2012-00096
COMMISSION STAFF'S FIRST REQUEST FOR INFORMATION

Division customers, are benefits that outweigh the possibility that KRS II would need to be expanded slightly sooner.

KENTUCKY-AMERICAN WATER COMPANY
CASE NO. 2012-00096
COMMISSION STAFF'S FIRST REQUEST FOR INFORMATION

Witness: Keith Cartier / Lance Williams

15. Provide for each year from January 1, 2006 to December 31, 2011, in total gallons and as a percentage of total water produced and purchased, the Northern Division's:

    a. Unaccounted-for water; and
    b. Non-revenue water.

Response:

a.

	2006	2007	2008	2009	2010	2011
Unaccounted-For Water 1,000 Gallons	98,590	60,680	85,964	87,600	64,986	148,005
Unaccounted-For Water %	33.5%	22.0%	28.3%	29.8%	19.9%	38.7%

b.

	2006	2007	2008	2009	2010	2011
NRW 1,000 Gallons	111,938	74,906	112,957	101,598	81,148	166,148
NRW %	38.1%	27.1%	37.2%	34.6%	24.9%	43.4%

KENTUCKY-AMERICAN WATER COMPANY
CASE NO. 2012-00096
COMMISSION STAFF'S FIRST REQUEST FOR INFORMATION

Witness: Lance Williams

16. Provide a schedule showing the ages of the components of the Northern Division's water distribution system.

Response:

See below the map and table that shows the approximate age of the components of the Northern Division's water distribution system.

Calibration Group	Description	Approximate Installed Year
0	Owenton Area	1940s
1	Owenton Area and North of the North MM	1960s
2	South of the South MM, Elk Lake and Monterey Area	1960s
3	Owenton Area and South of the South MM	1980s
4	North and South MM Areas	1990s
5	Owenton Area	2000s
6	North of the North MM	2000s
7	South of the South MM	2000s
8	Rockdale MM Service Area	2000s
9	New Columbus Tank Service Area	2000s

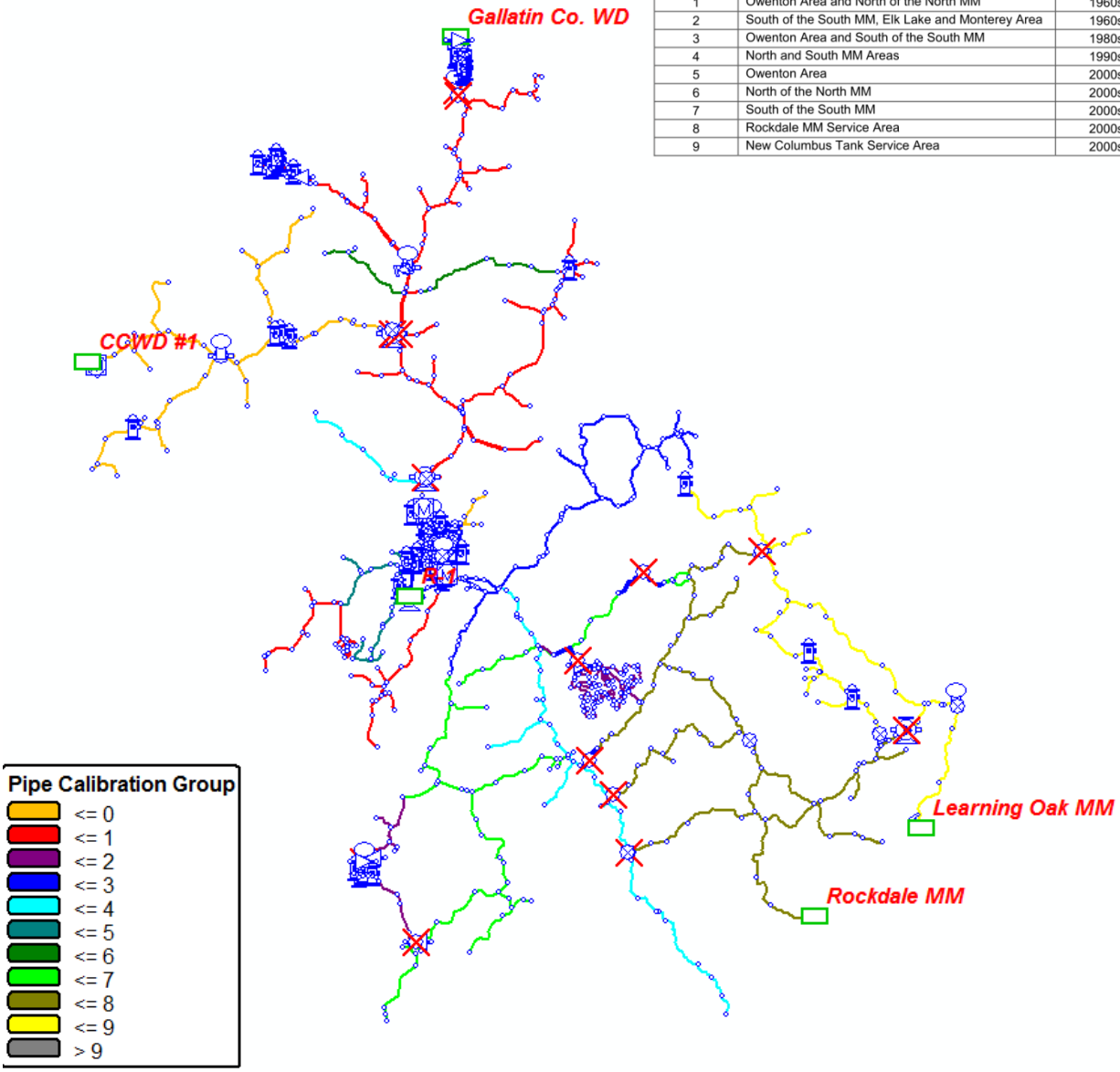

KENTUCKY-AMERICAN WATER COMPANY
CASE NO. 2012-00096
COMMISSION STAFF'S FIRST REQUEST FOR INFORMATION

Witness: Lance Williams

17. Refer to "Engineering Feasibility Study Report for Supplying Kentucky American Water's Northern District Distribution System" at 5. For each capital improvement project listed, provide all work papers, studies, reports, notes, correspondence and preliminary estimates that were used to derive the estimated cost of the improvement.

Response:

Please see the attached documents from Strand Associates Inc.:

- Owenton, Kentucky, Water Treatment Plant Improvements dated April 4, 2012.
- Owenton Water Treatment Plant Chemical Feed System Improvements and Chlorine Scrubber Budgetary Opinion of Probable Cost and Design Summary, dated August 29, 2008.

STRAND ASSOCIATES®

Strand Associates, Inc.®
Waterfront Plaza
325 West Main Street, Suite 710
Louisville, KY 40202
(P) 502-583-7020
(F) 502-583-7026

April 4, 2012

Mr. Jason Hurt, P.E.
Kentucky American Water
2300 Richmond Road
Lexington, KY 40502

Re: Owenton, Kentucky, Water Treatment Plant Improvements

Dear Jason,

This letter is in response to your request to provide preliminary capital costs for several Kentucky American Water (KAW) identified improvements to the Owenton intake and water treatment plant. The following is our understanding of the desired improvements.

1. Chemical Bulk Storage Improvements: These improvements were designed to bring chemical storage and feed facilities to American Water standards and improve delivery access by bulk chemical suppliers. The improvements include a new chemical feed building that houses bulk liquid chemicals, access road improvements, and a chlorine scrubber. Strand Associates, Inc.® provided preliminary design for these improvements in 2008.

2. Chemical Pretreatment Reliability Improvements: These improvements are intended to address a lack of redundancy in the existing sedimentation- related process. KAW desires a full capacity process to provide treatment when the existing process is taken out of service. The improvements include horizontal shaft flocculators and a sedimentation process utilizing plate settlers in a package metal tank.

3. Sludge Handling Improvements: These improvements are intended to improve treatment of solids residuals from sedimentation and filtration processes. KAW desires a gravity sludge thickener and belt filter press.

4. Filter Redundancy Improvements: These improvements are intended to improve redundancy of the filtration process. KAW desires two additional filters of equal size as the existing filters.

5. Emergency Power Reliability Improvements: These improvements are intended to provide backup power to both treatment plant and intake facilities. KAW desires a standby generator at both locations.

6. SCADA Improvements: These improvements are intended to improve the efficiency of operations and update antiquated equipment controls. KAW desires supervisory control and data acquisition (SCADA) graphics and controls of various existing and new equipment.

7. Raw Water Intake Improvements: These improvements are intended to provide a more reliable source water supply than the existing intake on Severn Creek. KAW desires a new intake on

Strand Associates, Inc.

the Kentucky River near its existing intake on Severn Creek. New raw water pumps, permanganate feed system, and security improvements are also included.

8. New Storage Tank: These improvements are intended to stabilize system pressures and meet KAW's need for additional usable storage. It will also allow for the Fairgrounds tank to be taken out of service for required maintenance. KAW desires the tank to be a new 1-million-gallon elevated storage tank.

The following table provides a preliminary opinion of probable cost in second quarter 2012 dollars. Each improvement includes construction and engineering costs and contingency.

Capital Improvement Description	Cost
Chemical Bulk Storage Improvements	$2,100,000
Pretreatment Reliability Improvements	$1,200,000
Sludge Handling Improvements	$1,800,000
Filter Reliability Improvements	$1,700,000
Emergency Power Reliability Improvements	$600,000
SCADA Improvements	$300,000
Raw Water Intake Improvements	$1,400,000
New Storage Tank	$2,300,000
Total	**$11,400,000**

Where possible, several improvement costs were based on recent projects of similar size. However, several other costs included published cost curves based on similarly sized treatment capacity. The intake improvement costs were based primarily on the City of Owenton's budgeted cost of the project as developed by MSE Inc. and reflected in 2012 dollars utilizing Engineering News Record's construction indices. The chemical bulk feed and intake improvements had some level of detailed design associated with them. Total capital costs could change significantly as the projects are further defined and KAW's preferences evolve.

Sincerely,

STRAND ASSOCIATES, INC.®

Christopher J. Keil, P.E.

c: Lance Williams, Kentucky American Water

STRAND
ASSOCIATES, INC.®
ENGINEERS

Waterfront Plaza
Suite 710
325 West Main Street
Louisville, KY 40202
Phone: 502-583-7020
Fax: 502-583-7026

Office Locations

Madison, WI
Joliet, IL
Louisville, KY
Lexington, KY
Mobile, AL
Columbus, IN
Columbus, OH
Indianapolis, IN
Milwaukee, WI
Cincinnati, OH

www.strand.com

August 29, 2008

Jason Hurt, P.E., Project Manager
Kentucky American Water
2300 Richmond Road
Lexington, KY 40502

Re: Owenton Water Treatment Plant Chemical Feed System Improvements and Chlorine Scrubber
Budgetary Opinion of Probable Cost and Design Summary

Strand Associates, Inc. was retained by Kentucky American Water (KAW) to develop a set of 70 percent drawings and opinion of probable cost for improvements to the Owenton Water Treatment Plant. This letter provides a summary of the design improvements and associated cost. The actual drawings of the design improvements will be provided by September 15, 2008 as established by Amendment No. 1.

Please note that if construction occurs far beyond the date of this letter, costs will need to be reevaluated because of the price volatility in the construction industry. The cost opinion discussed in this letter is based on the following items:

- September 2006 Preliminary Engineering Report (PER).
- Requested changes in scope as indicated in Amendment No. 1.
- Proposed Design Criteria letter dated July 9, 2008.
- Powder Activated Carbon Feed Evaluation dated July 9, 2008.
- Site Plan and Building Plan Review meeting on August 4, 2008.
- Additional correspondence with KAW.

As requested, the budgetary cost opinion was broken into four main categories:

1. Access Road Improvements.
2. Chemical Building.
3. Chlorine Scrubber.
4. Existing Building Improvements.

Although listed separately, these costs were developed with the intent of a single construction contract. The enclosed table is a summary of the August 2008 budgetary cost opinion.

In addition, KAW requested that budgetary equipment cost be provided for a new liquid sodium permanganate chemical feed system. This is also discussed in this letter.

STRAND ASSOCIATES, INC.® ENGINEERS

Access Road Improvements

The purpose of the access road improvements is to accommodate the large trucks that deliver chemicals to the treatment plant. According to the chemical supplier, the chemical delivery truck has an approximate load weight of 80,000 pounds and is approximately 80 feet long in length (WB-65).

The enclosed Overall Site Plan shows the proposed improvements. These improvements were designed to allow chemical delivery trucks to pull forward next to the chemical building and backup next to the clearwell before leaving the plant site.

The following list of items was included in the design.

- Remove existing retaining wall.
- Relocate 14-inch DI river water main.
- Remove and replace existing fence.
- Fill and regrade to widen access road.
- Cut and regrade for new pavement access near clearwell.
- Install new pavement (1.5-inch bituminous surface, 3-inch bituminous base, 9-inch DGA)
- Repave existing pavement (remove and replace existing 1.5-inch bituminous surface).
- Provide new guardrail along widened access road.
- Relocate existing light poles to accommodate widened access road.
- Provide drainage improvements including bituminous curb along widened access road, two new headwalls on existing culverts, and new riprap

These improvements, as designed, will also require a construction easement along the west property line.

STRAND ASSOCIATES, INC.® ENGINEERS

Chemical Feed Improvements

The purpose of the chemical feed improvements is to provide a structure to house chemical storage and feed equipment for ferric chloride, caustic soda, hydrofluorosilicic acid, corrosion inhibitor, and sulfuric acid.

The enclosed Building Plan and Sections display the chemical building layout and some structural details.

The chemical building improvements include:

- Five chemical systems with bulk tanks, day tanks, level sensors, drum and tote scales, transfer pumps, and metering pumps.
- Five rooms with separate chemical containment areas with chemical resistant coating (five total).
- Separate HVAC equipment for each room.
- Fire protection (sprinkler system).
- Fiberglass grating.
- Fiberglass doors with windows (five total).
- Coiling overhead doors (three total).
- Brick and block masonry walls.
- Pre-cast plank ceiling.
- Gable roof with preengineered roof truss and prefinished metal roof system.
- Parking/loading area to provide access for chemical truck delivery.
- Pressure reducing valve for sprinkler system and process water.

The chemical building site work includes:

- Parking/loading area (1.5-inch bituminous surface, 3-inch bituminous base, 9-inch DGA)

- Cut and regrade for new building.
- Replace and remove fence.
- Ductile iron pipe (six inch) to chemical building for fire protection.
- Two concrete encased PVC containment pipes with flexible PE chemical carrier pipe for yard piping and each chemical system (ten total).
- One access manhole with H20 loading access hatch for each chemical system to assist in future replacement of chemical tubing (five total).
- Single PVC chemical piping in existing building to each application point (five total)

Additional miscellaneous work includes the demolition of existing chemical equipment and tanks in the existing building.

Chlorine Scrubber

KAW has requested that the new emergency chlorine gas scrubber system be an Emergency Gas Scrubber (EGS)–FOC5 as manufactured by PURAFIL. KAW has requested that the chlorine scrubber be designed for the release of the contents of one 150 pound chlorine gas cylinder based on the requirements of Section II.D.9, Gas Scrubbers, in the T-9 American Water Systems Engineering Standards.

Chlorine scrubber improvements include:

- New chlorine scrubber installed outside existing building on equipment base.
- Fiberglass piping between the chlorine scrubber and the existing chlorine room through the ammonia room.
- Related electric and controls.

Miscellaneous Existing Building Improvements

Improvements to the existing activated carbon feed system, loading dock, and filter effluent pipe were also requested by KAW.

STRAND ASSOCIATES, INC.® ENGINEERS

These improvements include:

- Demolition and replacement of existing dust collector.
- New loading dock ramp.
- Electric pallet truck (6,000-lb capacity).
- Removal of existing 16-inch DI tee and vertical header and replace with PVC.
- Construction of new concrete curb around clearwell access.

Liquid Sodium Permanganate Feed System

KAW requested Strand Associates to provide an equipment cost opinion for a liquid sodium permanganate chemical feed system without a new building. The sodium permanganate chemical feed system equipment cost includes:

- A peristaltic chemical metering pump for approximately $3,100.
- A drum scale for approximately $2,400.

Possible Cost Savings

At the request of KAW, the following is a list of items that could be evaluated for their potential cost savings for the project.

- The five chemical access manholes could be eliminated. Each chemical system has two containment pipes and two carrier pipes running from the new chemical building to the existing building. Therefore, if there is a break in a chemical carrier pipe, there is already an installed spare pipe that can be used. Another option is smaller access sumps similar to those used for pulling electrical wire.
- Each chemical containment pipe is encased in concrete. While this provides added protection to the pipe, it may not be necessary.
- A single wythe insulated block exterior on the chemical building could be used in lieu of brick and block construction.
- An asphalt shingled roof on the chemical building could be constructed in lieu of a seam metal roof.

STRAND ASSOCIATES, INC.
ENGINEERS

Jason Hurt, P.E., Project Manager
Kentucky American Water
Page 6
August 29, 2008

- A membrane roofing material over the flat precast roof plank on the chemical building could be constructed in lieu of a truss roof.
- Epoxy-coated steel doors in the chemical building could be provided in lieu of fiberglass doors.
- The bulk storage tanks are specialty tanks that will allow the tank to completely drain. There are tanks without this feature that are available. There may also be a wider range of sizes of tanks available that may help to reduce building height.

We would be happy to consider and incorporate these and other low cost options into the design documents by amendment to our agreement.

If you have any questions or concerns regarding the information provided in this letter, please feel free to give me a call.

Sincerely,

STRAND ASSOCIATES, INC.

Tobias J. Parker, P.E.

Enclosure(s)

c/enc.: Chris Keil, P.E.
Brian Hackman, P.E.

SUMMARY OF CONSTRUCTION COST OPINION FOR THIRD QUARTER 2008

Description	Access Road Improvements	Chemical Building	Chlorine Scrubber	Misc. Existing Building Improvements
Bulk Chemical Delivery Road Improvements	$160,000			
Proposed Chemical Building		$845,000		
Chlorine Scrubber			$84,000	
PAC feed Dust Collector				$10,000
Loading Dock Improvements				$12,000
New 16-inch PVC Filter Effluent Pipe				$20,000
SUBTOTAL	**$160,000**	**$845,000**	**$84,000**	**$40,000**
General Conditions (8%)	$12,800	$67,600	$6,700	$3,200
SUBTOTAL	**$172,800**	**$912,600**	**$90,700**	**$43,200**
Contingency (15%)	$28,000	$148,000	$15,000	$7,000
Construction Cost Opinion (Third Quarter 2008)	**$200,000**	**$1,060,000**	**$110,000**	**$50,000**
Total Construction Cost Opinion (Third Quarter 2008)				**$1,420,000**

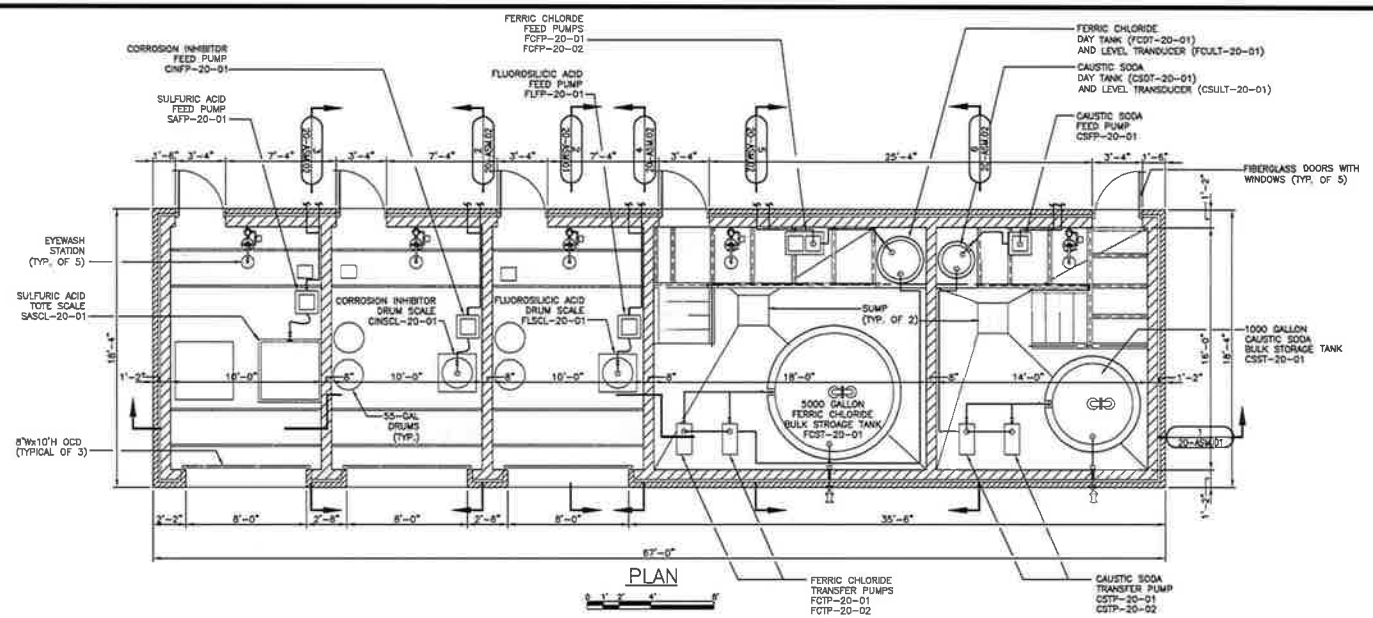

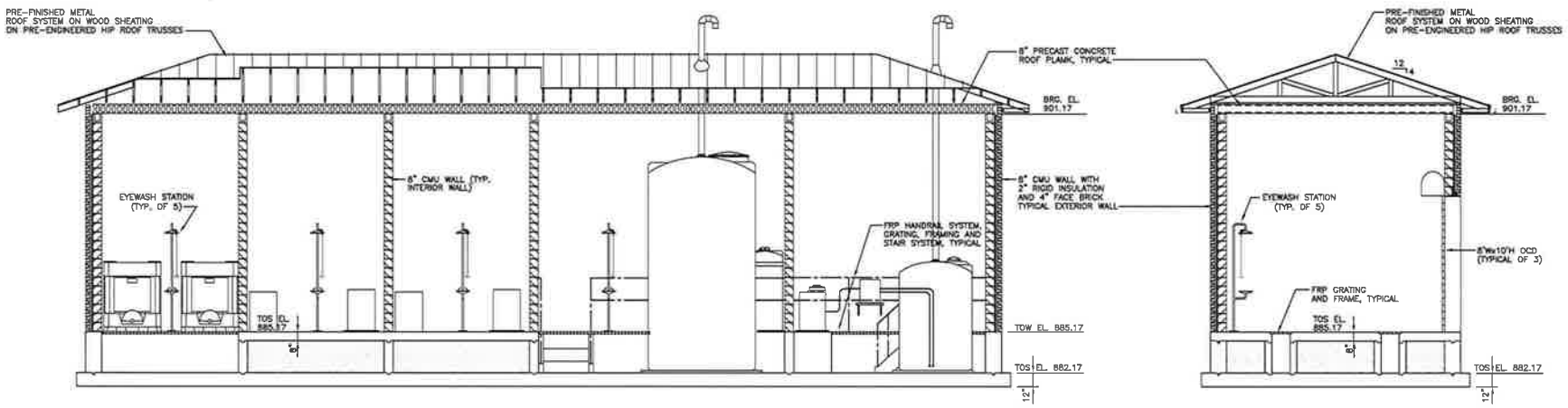

NOT FOR CONSTRUCTION

NO.	REVISIONS	DATE:

DATE: 9/08 DES BY: DJP CHK BY: CJK
RECORD DRAWING
BY: DATE: CONTRACTOR:

CHEMICAL BUILDING
PLAN AND SECTION
OWEN COUNTY WATER TREATMENT PLANT
CHEMICAL FEED SYSTEM IMPROVEMENTS
KENTUCKY AMERICAN WATER
OWENTON, KENTUCKY

STRAND ASSOCIATES, INC. ENGINEERS

SHEET XXX
20-ASM.01
JOB NO. 5493.107

File: S:\LOU\5400--5499\5493\107\Acad\20-ASM.01.dwg Time: Aug 29, 2008 - 1:47pm

KAW_R_PSCDR1#17_072312

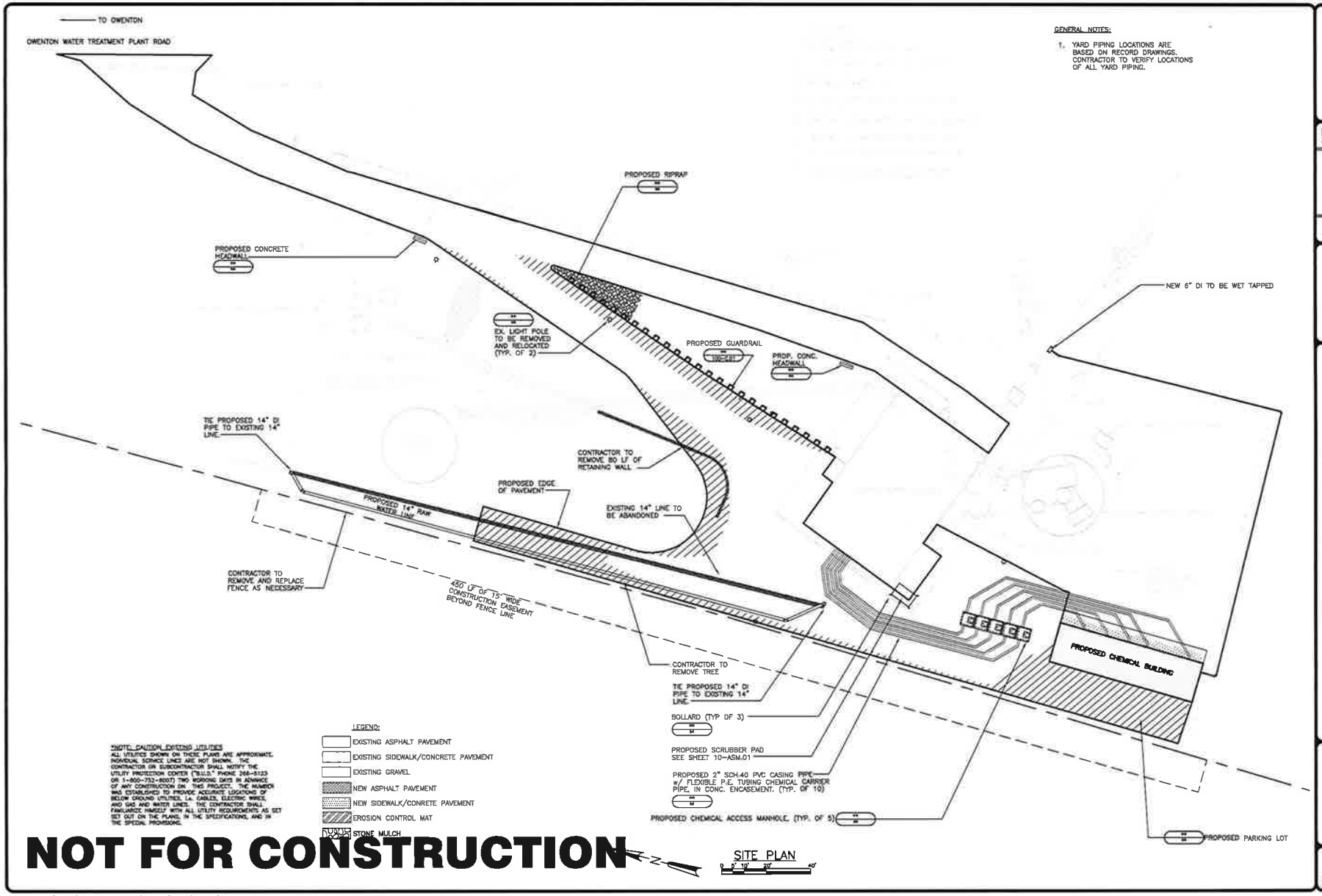

NO. | REVISIONS | DATE:

DATE: 9/08
DES BY: FJP CHK BY: CJK
RECORD DRAWING
BY:
DATE:
CONTRACTOR:

OVERALL SITE PLAN

OWEN COUNTY WATER TREATMENT PLANT
CHEMICAL FEED SYSTEM IMPROVEMENTS
KENTUCKY AMERICAN WATER
OWENTON, KENTUCKY

BTRANS ASSOCIATES, INC. ENGINEERS

SHEET 6
05-C.01
JOB NO. 5493.107

File: S:\LOU\5400--5499\5493\107\Acad\05-C.01.dwg Time: Aug 29, 2008 - 1:45pm

KAW_R_PSCDR1#17_072312

KENTUCKY-AMERICAN WATER COMPANY
CASE NO. 2012-00096
COMMISSION STAFF'S FIRST REQUEST FOR INFORMATION

Witness: Lance Williams / Keith Cartier

18. Provide all correspondence between Kentucky-American and KDOW since January 1, 2005 regarding the Owenton Water Treatment Plant.

Response:

Correspondence for this time period is included in the Attachment. The Attachment does not include routine compliance submittals due to the fact that it is submitted electronically and is therefore not in a readable format. As with all of its discovery responses, KAW has endeavored to identify and produce all documents within its care, custody and control that are responsive to this request. To the extent that process identifies further responsive documents, KAW, will, of course, supplement this response.

ERNIE FLETCHER
GOVERNOR

ENVIRONMENTAL AND PUBLIC PROTECTION CABINET
DEPARTMENT FOR ENVIRONMENTAL PROTECTION
DIVISION OF WATER
14 REILLY ROAD
FRANKFORT, KENTUCKY 40601
www.kentucky.gov

LAJUANA S. WILCHER
SECRETARY

August 30, 2006

Mr. Richard Buchanan
Kentucky American Northern Division
102 North Main St.
Owenton, KY 40359

Water Withdrawal Permit: **#0863**
Activity ID Number: **APE20060006**

Dear Mr. Buchanan:

Thank you for your application for a revised water withdrawal permit. This letter accompanies permit #0863 which authorizes withdrawals from mile 0.5 of Severn Creek located in Owen County with geographic coordinates of latitude 38° 28' 05.40" longitude 84° 55' 01.53".

In accordance with this permit, water withdrawals are limited to the following rates from the specified location:

Jan. <=0.800 MGD (MA)	**April <=0.800 MGD (MA)**	**July <=0.900 MGD (MA)**	**Oct. <=0.900 MGD (MA)**
Feb. <=0.800 MGD (MA)	**May <=0.900 MGD (MA)**	**Aug. <=0.900 MGD (MA)**	**Nov. <=0.800 MGD (MA)**
March <=0.800 MGD (MA)	**June <=0.900 MGD (MA)**	**Sept. <=0.900 MGD (MA)**	**Dec. <=0.800 MGD (MA)**

Please refer to the enclosed permit which specifies all conditions associated with this withdrawal, including monitoring and compliance requirements.

The issuance of this permit does not release you from the obligation of obtaining any and all other permits that may be required by this Division or other regulatory agencies.

If you have any questions, please contact Chris Yeary or Rita Hockensmith at (502) 564-3410.

Issued this 30th day of August 2006.

By: _____
Peter T. Goodmann, Manager
Watershed Management Branch
Division of Water

PTG:cy
Enclosure
cc: Florence Regional Office

Revised Permit to Withdraw Public Water

Kentucky American Northern Division
Subject Item Inventory
Permit Number:0863
Activity ID No.: APE20060006

Subject Item Inventory:

ID	Designation	Description
AIOO34054		
STRC5	Intake Severn Creek	WR: intake at mile 0.5 of Severn Creek

Subject Item Groups:

ID	Description	Components
GACT15	SURFACE: mile 0.5 of Severn Creek	STRC5 WR: intake at mile 0.5 of Severn Creek

KEY

ACTV = Activity	AIOO = Agency Interest
AREA = Area	COMB = Combustion
EQPT = Equipment	MNPT = Monitoring Point
PERS = Personnel	PORT = Transport
STOR = Storage	STRC = Structure
TRMT = Treatment	

Revised Permit to Withdraw Public Water
Kentucky American Northern Division
Facility Requirements
Permit Number:0863
Activity ID No.: APE20060006

GACT15 (0863 Severn Creek) SURFACE: mile 0.5 of Severn Creek:

Limitation Requirements:

Condition No.	Parameter	Condition
L-1	Withdrawal	Withdrawal <= 0.800 MGD (MA) shall be allowed from the location specified in the Narrative Requirements below. [KRS 151.170] This requirement is applicable during the following months: January. Statistical basis: Daily maximum (MX).
L-2	Withdrawal	Withdrawal <= 0.800 MGD (MA) shall be allowed from the location specified in the Narrative Requirements below. [KRS 151.170] This requirement is applicable during the following months: February. Statistical basis: Daily maximum (MX).
L-3	Withdrawal	Withdrawal <= 0.800 MGD (MA) shall be allowed from the location specified in the Narrative Requirements below. [KRS 151.170] This requirement is applicable during the following months: March. Statistical basis: Daily maximum (MX).
L-4	Withdrawal	Withdrawal <= 0.800 MGD (MA) shall be allowed from the location specified in the Narrative Requirements below. [KRS 151.170] This requirement is applicable during the following months: April. Statistical basis: Daily maximum (MX).
L-5	Withdrawal	Withdrawal <= 0.900 MGD (MA) shall be allowed from the location specified in the Narrative Requirements below. [KRS 151.170] This requirement is applicable during the following months: May. Statistical basis: Daily maximum (MX).
L-6	Withdrawal	Withdrawal <= 0.900 MGD (MA) shall be allowed from the location specified in the Narrative Requirements below. [KRS 151.170] This requirement is applicable during the following months: June. Statistical basis: Daily maximum (MX).
L-7	Withdrawal	Withdrawal <= 0.900 MGD (MA) shall be allowed from the location specified in the Narrative Requirements below. [KRS 151.170] This requirement is applicable during the following months: July. Statistical basis: Daily maximum (MX).
L-8	Withdrawal	Withdrawal <= 0.900 MGD (MA) shall be allowed from the location specified in the Narrative Requirements below. [KRS 151.170] This requirement is applicable during the following months: August. Statistical basis: Daily maximum (MX).
L-9	Withdrawal	Withdrawal <= 0.900 MGD (MA) shall be allowed from the location specified in the Narrative Requirements below. [KRS 151.170] This requirement is applicable during the following months: September. Statistical basis: Daily maximum (MX).
L-10	Withdrawal	Withdrawal <= 0.900 MGD (MA) shall be allowed from the location specified in the Narrative Requirements below. [KRS 151.170] This requirement is applicable during the following months: October. Statistical basis: Daily maximum (MX).
L-11	Withdrawal	Withdrawal <= 0.800 MGD (MA) shall be allowed from the location specified in the Narrative Requirements below. [KRS 151.170] This requirement is applicable during the following months: November. Statistical basis: Daily maximum (MX).

Revised Permit to Withdraw Public Water
Kentucky American Northern Division
Facility Requirements
Permit Number:0863
Activity ID No.: APE20060006

FACT15 (continued):

Limitation Requirements:

Condition No.	Parameter	Condition
L-12	Withdrawal	Withdrawal <= 0.800 MGD (MA) shall be allowed from the location specified in the Narrative Requirements below. [KRS 151.170] This requirement is applicable during the following months: December. Statistical basis: Daily maximum (MX).

Monitoring Requirements:

Condition No.	Parameter	Condition
M-1	Withdrawal	The permittee shall measure Withdrawal monitored by meter or other approved method daily as described in the Narrative Requirements below. [401 KAR 4:010 Section 3] This requirement is applicable during the following months: January. Statistical basis: Daily maximum (MX).
M-2	Withdrawal	The permittee shall measure Withdrawal monitored by meter or other approved method daily as described in the Narrative Requirements below. [401 KAR 4:010 Section 3] This requirement is applicable during the following months: February. Statistical basis: Daily maximum (MX).
M-3	Withdrawal	The permittee shall measure Withdrawal monitored by meter or other approved method daily as described in the Narrative Requirements below. [401 KAR 4:010 Section 3] This requirement is applicable during the following months: March. Statistical basis: Daily maximum (MX).
M-4	Withdrawal	The permittee shall measure Withdrawal monitored by meter or other approved method daily as described in the Narrative Requirements below. [401 KAR 4:010 Section 3] This requirement is applicable during the following months: April. Statistical basis: Daily maximum (MX).
M-5	Withdrawal	The permittee shall measure Withdrawal monitored by meter or other approved method daily as described in the Narrative Requirements below. [401 KAR 4:010 Section 3] This requirement is applicable during the following months: May. Statistical basis: Daily maximum (MX).
M-6	Withdrawal	The permittee shall measure Withdrawal monitored by meter or other approved method daily as described in the Narrative Requirements below. [401 KAR 4:010 Section 3] This requirement is applicable during the following months: June. Statistical basis: Daily maximum (MX).

Revised Permit to Withdraw Public Water
Kentucky American Northern Division
Facility Requirements
Permit Number:0863
Activity ID No.: APE20060006

GACT15 (continued):

Monitoring Requirements:

Condition No.	Parameter	Condition
M-7	Withdrawal	The permittee shall measure Withdrawal monitored by meter or other approved method daily as described in the Narrative Requirements below. [401 KAR 4:010 Section 3] This requirement is applicable during the following months: July. Statistical basis: Daily maximum (MX).
M-8	Withdrawal	The permittee shall measure Withdrawal monitored by meter or other approved method daily as described in the Narrative Requirements below. [401 KAR 4:010 Section 3] This requirement is applicable during the following months: August. Statistical basis: Daily maximum (MX).
M-9	Withdrawal	The permittee shall measure Withdrawal monitored by meter or other approved method daily as described in the Narrative Requirements below. [401 KAR 4:010 Section 3] This requirement is applicable during the following months: September. Statistical basis: Daily maximum (MX).
M-10	Withdrawal	The permittee shall measure Withdrawal monitored by meter or other approved method daily as described in the Narrative Requirements below. [401 KAR 4:010 Section 3] This requirement is applicable during the following months: October. Statistical basis: Daily maximum (MX).
M-11	Withdrawal	The permittee shall measure Withdrawal monitored by meter or other approved method daily as described in the Narrative Requirements below. [401 KAR 4:010 Section 3] This requirement is applicable during the following months: November. Statistical basis: Daily maximum (MX).
M-12	Withdrawal	The permittee shall measure Withdrawal monitored by meter or other approved method daily as described in the Narrative Requirements below. [401 KAR 4:010 Section 3] This requirement is applicable during the following months: December. Statistical basis: Daily maximum (MX).

Record-Keeping Requirements:

Withdrawal:

Condition No.	Condition
R-1	The permittee shall perform Withdrawal recordkeeping by reporting water withdrawals daily on forms supplied by the Cabinet. [401 KAR 4:010 Section 2]

Revised Permit to Withdraw Public Water
Kentucky American Northern Division
Facility Requirements
Permit Number:0863
Activity ID No.: APE20060006

GACT15 (continued):

Submittal/Action Requirements:

Condition No.	Condition
S-1	The permittee shall submit water withdrawal reporting forms: Due monthly, by the 15th of the month. [401 KAR 4:010 Section 2]

Narrative Requirements:

Condition No.	Condition
T-1	The Environmental and Public Protection Cabinet authorizes the above named party to withdraw Public Water of the Commonwealth of Kentucky. This permit has been issued under provisions of KRS Chapter 151.125, 151.140, and 151.150 and regulations promulgated with respect to the withdrawal of public waters. Issuance of this permit does not relieve the permittee from the responsibility of obtaining any other permits or licenses required by this Cabinet, or other state, federal, or local agencies. Withdrawals are restricted to the stated quantities, times, and locations specified above. This permit represents a limited right of use and does not vest ownership nor absolute right to withdrawal or use of Public Water, nor does it guarantee that requested amounts will be available for use at all times. In times of drought or emergency, the Cabinet my temporarily alter the conditions of the permit. Any violation of the Water Resources Act of 1966 as amended is subject to penalties as set forth in KRS 151.990 and other applicable provisions of law. [KRS 151]
T-2	Monitoring equipment shall be calibrated annually according to the manufacturer's recommendations and a record kept to include date of calibration, calculations for percent error, and adjustments made either to the equipment or to the use of the data obtained from the equipment. Records shall be maintained and updated annually and shall be made available upon request for review by the Cabinet. [401 KAR 4:010 Section 2]
T-3	If average monthly withdrawal amounts begin to exceed permitted amounts, or if there is any change in the location of the withdrawal site, you must contact this office immediately and request a revision. [KRS 151.170]
T-4	The location of the authorized withdrawal is from mile 0.5 of Severn Creek in Owen County, with coordinates: latitude 38° 28' 05.40", longitude 84° 55' 01.53". . [KRS 151.170]
T-5	Kentucky American Water - Northern Division shall notify the Cabinet whenever a Drought Management Phase is declared, beginning with the Advisory phase. [401 KAR 4:010 Section 2]
T-6	As approved, the permittee shall monitor water withdrawals with a Badger meter. [401 KAR 4:010 Section 2]

Revised Permit to Withdraw Public Water
Kentucky American Northern Division
Facility Requirements
Permit Number:0863
Activity ID No.: APE20060006

GACT15 (continued):

Narrative Requirements:

Condition No.	Condition
T-7	Kentucky American Water - Northern Division is prohibited from reducing flows below the intake in Severn Creek to a rate of 0.4 cubic feet per second. [401 KAR 4:200 Section 3]

ERNIE FLETCHER
GOVERNOR

ENVIRONMENTAL AND PUBLIC PROTECTION CABINET
DEPARTMENT FOR ENVIRONMENTAL PROTECTION
DIVISION OF WATER
14 REILLY ROAD
FRANKFORT, KENTUCKY 40601
www.kentucky.gov

LAJUANA S. WILCHER
SECRETARY

August 29, 2006

Mr. Richard Buchanan
Kentucky American Northern Division
102 North Main St.
Owenton, KY 40359

Water Withdrawal Permit: **#0874**
Activity ID Number: **APE20060005**

Dear Mr. Buchanan:

Thank you for your application for a revised water withdrawal permit. This letter accompanies permit #0874 which authorizes withdrawals from Lower Thomas Lake, mile 6.3 of the North Fork of Severn Creek, located in Owen County with geographic coordinates of latitude 38° 31' 23.35" longitude 84° 50' 58.75".

In accordance with this permit, water withdrawals are limited to the following rates from the specified location:

Jan. <=0.800 MGD (MA)	**April <=0.800 MGD (MA)**	**July <=0.900 MGD (MA)**	**Oct. <=0.900 MGD (MA)**
Feb. <=0.800 MGD (MA)	**May <=0.850 MGD (MA)**	**Aug. <=0.900 MGD (MA)**	**Nov. <=0.800 MGD (MA)**
March <=0.800 MGD (MA)	**June <=0.850 MGD (MA)**	**Sept. <=0.900 MGD (MA)**	**Dec. <=0.800 MGD (MA)**

Please refer to the enclosed permit which specifies all conditions associated with this withdrawal, including monitoring and compliance requirements.

The issuance of this permit does not release you from the obligation of obtaining any and all other permits that may be required by this Division or other regulatory agencies.

If you have any questions, please contact Chris Yeary or Rita Hockensmith at (502) 564-3410.

Issued this 29th day of August 2006.

By: _____
Peter T. Goodmann, Manager
Watershed Management Branch
Division of Water

PTG:cy
Enclosure
cc: Florence Regional Office

Revised Permit to Withdraw Public Water

Kentucky American Northern Division
Subject Item Inventory
Permit Number:0874
Activity ID No.: APE20060005

Subject Item Inventory:

ID	Designation	Description
AIOO34054		
STRC4	Intake Thomas Lake	WR: intake at 6.3 of the North Fork of Severn Creek

Subject Item Groups:

ID	Description	Components
GACT14	SURFACE: mile 6.3 of North Fork of Severn Cr	STRC4 WR: intake at 6.3 of the North Fork of Severn Creek

KEY

ACTV = Activity	AIOO = Agency Interest
AREA = Area	COMB = Combustion
EQPT = Equipment	MNPT = Monitoring Point
PERS = Personnel	PORT = Transport
STOR = Storage	STRC = Structure
TRMT = Treatment	

Revised Permit to Withdraw Public Water

Kentucky American Northern Division
Facility Requirements
Permit Number:0874
Activity ID No.: APE20060005

Limitation Requirements:

Condition No.	Item ID	Parameter	Condition
L-1	GACT14 (0874 Thomas Lake)	Withdrawal	Withdrawal <= 0.800 MGD (MA) shall be allowed from the location specified in the Narrative Requirements below. [KRS 151.170] This requirement is applicable during the following months: January. Statistical basis: Daily maximum (MX).
L-2	GACT14 (0874 Thomas Lake)	Withdrawal	Withdrawal <= 0.800 MGD (MA) shall be allowed from the location specified in the Narrative Requirements below. [KRS 151.170] This requirement is applicable during the following months: February. Statistical basis: Daily maximum (MX).
L-3	GACT14 (0874 Thomas Lake)	Withdrawal	Withdrawal <= 0.800 MGD (MA) shall be allowed from the location specified in the Narrative Requirements below. [KRS 151.170] This requirement is applicable during the following months: March. Statistical basis: Daily maximum (MX).
L-4	GACT14 (0874 Thomas Lake)	Withdrawal	Withdrawal <= 0.800 MGD (MA) shall be allowed from the location specified in the Narrative Requirements below. [KRS 151.170] This requirement is applicable during the following months: April. Statistical basis: Daily maximum (MX).
L-5	GACT14 (0874 Thomas Lake)	Withdrawal	Withdrawal <= 0.850 MGD (MA) shall be allowed from the location specified in the Narrative Requirements below. [KRS 151.170] This requirement is applicable during the following months: May. Statistical basis: Daily maximum (MX).
L-6	GACT14 (0874 Thomas Lake)	Withdrawal	Withdrawal <= 0.850 MGD (MA) shall be allowed from the location specified in the Narrative Requirements below. [KRS 151.170] This requirement is applicable during the following months: June. Statistical basis: Daily maximum (MX).
L-7	GACT14 (0874 Thomas Lake)	Withdrawal	Withdrawal <= 0.900 MGD (MA) shall be allowed from the location specified in the Narrative Requirements below. [KRS 151.170] This requirement is applicable during the following months: July. Statistical basis: Daily maximum (MX).
L-8	GACT14 (0874 Thomas Lake)	Withdrawal	Withdrawal <= 0.900 MGD (MA) shall be allowed from the location specified in the Narrative Requirements below. [KRS 151.170] This requirement is applicable during the following months: August. Statistical basis: Daily maximum (MX).

Revised Permit to Withdraw Public Water

Kentucky American Northern Division
Facility Requirements
Permit Number:0874
Activity ID No.: APE20060005

Limitation Requirements:

Condition No.	Item ID	Parameter	Condition
L-9	GACT14 (0874 Thomas Lake)	Withdrawal	Withdrawal <= 0.900 MGD (MA) shall be allowed from the location specified in the Narrative Requirements below. [KRS 151.170] This requirement is applicable during the following months: September. Statistical basis: Daily maximum (MX).
L-10	GACT14 (0874 Thomas Lake)	Withdrawal	Withdrawal <= 0.900 MGD (MA) shall be allowed from the location specified in the Narrative Requirements below. [KRS 151.170] This requirement is applicable during the following months: October. Statistical basis: Daily maximum (MX).
L-11	GACT14 (0874 Thomas Lake)	Withdrawal	Withdrawal <= 0.800 MGD (MA) shall be allowed from the location specified in the Narrative Requirements below. [KRS 151.170] This requirement is applicable during the following months: November. Statistical basis: Daily maximum (MX).
L-12	GACT14 (0874 Thomas Lake)	Withdrawal	Withdrawal <= 0.800 MGD (MA) shall be allowed from the location specified in the Narrative Requirements below. [KRS 151.170] This requirement is applicable during the following months: December. Statistical basis: Daily maximum (MX).

Monitoring Requirements:

Condition No.	Item ID	Parameter	Condition
M-1	GACT14 (0874 Thomas Lake)	Withdrawal	The permittee shall measure Withdrawal monitored by meter or other approved method daily as described in the Narrative Requirements below. [401 KAR 4:010 Section 3] This requirement is applicable during the following months: January. Statistical basis: Daily maximum (MX).
M-2	GACT14 (0874 Thomas Lake)	Withdrawal	The permittee shall measure Withdrawal monitored by meter or other approved method daily as described in the Narrative Requirements below. [401 KAR 4:010 Section 3] This requirement is applicable during the following months: February. Statistical basis: Daily maximum (MX).

Revised Permit to Withdraw Public Water

Kentucky American Northern Division
Facility Requirements
Permit Number:0874
Activity ID No.: APE20060005

Monitoring Requirements:

Condition No.	Item ID	Parameter	Condition
M-3	GACT14 (0874 Thomas Lake)	Withdrawal	The permittee shall measure Withdrawal monitored by meter or other approved method daily as described in the Narrative Requirements below. [401 KAR 4:010 Section 3] This requirement is applicable during the following months: March. Statistical basis: Daily maximum (MX).
M-4	GACT14 (0874 Thomas Lake)	Withdrawal	The permittee shall measure Withdrawal monitored by meter or other approved method daily as described in the Narrative Requirements below. [401 KAR 4:010 Section 3] This requirement is applicable during the following months: April. Statistical basis: Daily maximum (MX).
M-5	GACT14 (0874 Thomas Lake)	Withdrawal	The permittee shall measure Withdrawal monitored by meter or other approved method daily as described in the Narrative Requirements below. [401 KAR 4:010 Section 3] This requirement is applicable during the following months: May. Statistical basis: Daily maximum (MX).
M-6	GACT14 (0874 Thomas Lake)	Withdrawal	The permittee shall measure Withdrawal monitored by meter or other approved method daily as described in the Narrative Requirements below. [401 KAR 4:010 Section 3] This requirement is applicable during the following months: June. Statistical basis: Daily maximum (MX).
M-7	GACT14 (0874 Thomas Lake)	Withdrawal	The permittee shall measure Withdrawal monitored by meter or other approved method daily as described in the Narrative Requirements below. [401 KAR 4:010 Section 3] This requirement is applicable during the following months: July. Statistical basis: Daily maximum (MX).
M-8	GACT14 (0874 Thomas Lake)	Withdrawal	The permittee shall measure Withdrawal monitored by meter or other approved method daily as described in the Narrative Requirements below. [401 KAR 4:010 Section 3] This requirement is applicable during the following months: August. Statistical basis: Daily maximum (MX).
M-9	GACT14 (0874 Thomas Lake)	Withdrawal	The permittee shall measure Withdrawal monitored by meter or other approved method daily as described in the Narrative Requirements below. [401 KAR 4:010 Section 3] This requirement is applicable during the following months: September. Statistical basis: Daily maximum (MX).

Revised Permit to Withdraw Public Water
Kentucky American Northern Division
Facility Requirements
Permit Number:0874
Activity ID No.: APE20060005

Monitoring Requirements:

Condition No.	Item ID	Parameter	Condition
M-10	GACT14 (0874 Thomas Lake)	Withdrawal	The permittee shall measure Withdrawal monitored by meter or other approved method daily as described in the Narrative Requirements below. [401 KAR 4:010 Section 3] This requirement is applicable during the following months: October. Statistical basis: Daily maximum (MX).
M-11	GACT14 (0874 Thomas Lake)	Withdrawal	The permittee shall measure Withdrawal monitored by meter or other approved method daily as described in the Narrative Requirements below. [401 KAR 4:010 Section 3] This requirement is applicable during the following months: November. Statistical basis: Daily maximum (MX).
M-12	GACT14 (0874 Thomas Lake)	Withdrawal	The permittee shall measure Withdrawal monitored by meter or other approved method daily as described in the Narrative Requirements below. [401 KAR 4:010 Section 3] This requirement is applicable during the following months: December. Statistical basis: Daily maximum (MX).

Record-Keeping Requirements:

Withdrawal:

Condition No.	Item ID	Condition
R-1	GACT14 (0874 Thomas Lake)	The permittee shall perform Withdrawal recordkeeping by reporting water withdrawals daily on forms supplied by the Cabinet. [401 KAR 4:010 Section 2]

Revised Permit to Withdraw Public Water

Kentucky American Northern Division
Facility Requirements
Permit Number:0874
Activity ID No.: APE20060005

Submittal/Action Requirements:

Condition No.	Item ID	Condition
S-1	GACT14 (0874 Thomas Lake)	The permittee shall submit water withdrawal reporting forms: Due monthly, by the 15th of the month. [401 KAR 4:010 Section 2]

Narrative Requirements:

Condition No.	Item ID	Condition
T-1	GACT14 (0874 Thomas Lake)	The Environmental and Public Protection Cabinet authorizes the above named party to withdraw Public Water of the Commonwealth of Kentucky. This permit has been issued under provisions of KRS Chapter 151.125, 151.140, and 151.150 and regulations promulgated with respect to the withdrawal of public waters. Issuance of this permit does not relieve the permittee from the responsibility of obtaining any other permits or licenses required by this Cabinet, or other state, federal, or local agencies. Withdrawals are restricted to the stated quantities, times, and locations specified above. This permit represents a limited right of use and does not vest ownership nor absolute right to withdrawal or use of Public Water, nor does it guarantee that requested amounts will be available for use at all times. In times of drought or emergency, the Cabinet my temporarily alter the conditions of the permit. Any violation of the Water Resources Act of 1966 as amended is subject to penalties as set forth in KRS 151.990 and other applicable provisions of law. [KRS 151]
T-2	GACT14 (0874 Thomas Lake)	Monitoring equipment shall be calibrated annually according to the manufacturer's recommendations and a record kept to include date of calibration, calculations for percent error, and adjustments made either to the equipment or to the use of the data obtained from the equipment. Records shall be maintained and updated annually and shall be made available upon request for review by the Cabinet. [401 KAR 4:010 Section 2]
T-3	GACT14 (0874 Thomas Lake)	If average monthly withdrawal amounts begin to exceed permitted amounts, or if there is any change in the location of the withdrawal site, you must contact this office immediately and request a revision. [KRS 151.170]
T-4	GACT14 (0874 Thomas Lake)	The location of the authorized withdrawal is from Lower Thomas Lake, mile 6.3 of the North Fork of Severn Creek, in Owen County, with coordinates: latitude 38° 31' 23.35", longitude 84° 50' 58.75". . [KRS 151.170]

Revised Permit to Withdraw Public Water

Kentucky American Northern Division
Facility Requirements
Permit Number:0874
Activity ID No.: APE20060005

Narrative Requirements:

Condition No.	Item ID	Condition
T-5	GACT14 (0874 Thomas Lake)	Kentucky American Water - Northern Division shall notify the Cabinet whenever a Drought Management Phase is declared, beginning with the Advisory phase. [401 KAR 4:010 Section 2]
T-6	GACT14 (0874 Thomas Lake)	As approved, the permittee shall monitor water withdrawals with a Badger PMT-C-LO-LOSS Flow Tube. [401 KAR 4:010 Section 2]

Ernie Fletcher
Governor

Teresa J. Hill, Secretary
Environmental and Public
Protection Cabinet

Timothy J. LeDonne
Commissioner
Department of Public Protection

Commonwealth of Kentucky
Public Service Commission
211 Sower Blvd.
P.O. Box 615
Frankfort, Kentucky 40602-0615
Telephone: (502) 564-3940
Fax: (502) 564-1582
psc.ky.gov

Mark David Goss
Chairman

John W. Clay
Commissioner

August 15, 2007

Carol Tudor
Senior Specialist
Kentucky-American Water Company Northern District
102 North Main Street
Owenton, KY 40359

RE: Periodic Regulatory Compliance Inspection

Dear Ms. Tudor:

On August 8, 2007, Joe Greenwell conducted a periodic regulatory compliance inspection of the Kentucky-American Water Company Northern District serving Gallatin, Grant, and Owen Counties in Kentucky. A copy of the report of that inspection is attached for your review. There were no deficiencies documented during the periodic inspection. The previous inspection of this facility was conducted on December 5, 2006. During that periodic inspection, no deficiencies were documented.

Please review the attached inspection report. If you have any questions or need additional information, please contact me at (502) 564-3940. We appreciate your continued interest in the safe operation of your facility.

Sincerely,

George W. Wakim, P.E., Manager
Water & Sewer Branch
Engineering Division

Attachment: KAWCND-080807 Inspection Report
C: Nick Rowe, President, Kentucky-American Water Company
Julie Roney, Supervisor, DOW

COMMONWEALTH OF KENTUCKY
PUBLIC SERVICE COMMISSION

UTILITY INSPECTION REPORT

Report Date: 8/13/2007

Report Number: KAWCND-080807

BRIEF

Inspector:	Joe Greenwell
Inspection Date:	8/8/2007
Type of Inspection:	Periodic Regulatory Compliance Inspection
Type of Facility:	Purchaser and Distribution Facility
Name of Utility:	KAWCND
Location of Facility:	102 North Main Street, Owenton, KY 40359; Attention: Carol Tudor, Senior Specialist
Purpose of Inspection:	Periodic inspection of utility facilities and management practices to verify compliance with PSC regulations
Applicable Regulations	KRS 278 and 807 KAR Chapter 5

INSPECTION

Description of Utility:	Water treatment plant with a capacity of 1.44 million gallons
Number of Customers:	3700
Area of Operation:	Gallatin, Grant, and Owen Counties
Supply Source:	Sebern Creek and Thomas Lake (Purchase from City of Georgetown, Carroll County Water District, and Gallatin County)
Distribution Description:	Average daily consumption of 675,000 gallons; 250 miles of distribution line (PVC, AC, and DI); total storage capacity of 1,743,000 gallons.
Workforce Summary:	11 employees: 5 office; 6 field
Utility Reps in Insp:	Carol Tudor and Marshall Gibson
Date of Last Inspection:	12/5/2006
DTR from Last Insp:	0
DTRs not Cleared:	0

Summary of items and facilities Inspected:

Records including, but not limited to, pressure charts; meter testing, reading, and history; flushing; service interruptions; complaints; facilities inspections and procedures; operation and maintenance manual; facilities maintenance; safety guidelines; a copy of a water shortage response plan; and the service area map, etc.; Fairgrounds Water Storage Facility (400,000 gal.); Perry Street Water Storage Facility (100,000 gal.); high service pumps in the treatment plant; low service pumps; and the pipe gallery.

COMMONWEALTH OF KENTUCKY
PUBLIC SERVICE COMMISSION

UTILITY INSPECTION REPORT

Report Date: 8/13/2007

Report Number: KAWCND-080807

FINDINGS

RECOMMENDATIONS

ADDITIONAL INSPECTOR COMMENTS

The district was given a copy of the water utility inspection quick reference, the water utility inspection checklist, the Public Service Commission's water loss monthly report, the water utility inspection procedures outline, the general outline for inspection plans, and the new edition of the laws affecting public utilities.

The Perry Street Water Storage Facility has been inspected, refurbished, and painted. The Fairgrounds Water Storage Facility is scheduled for painting in Fall 2009 due to not wanting to take it out of service because of drought conditions in the area.

Kentucky-American Water Company - Northern District (KAWCND) is part of Kentucky-American Water Company - Central District (KAWCCD). The Northern District's quarterly meter reports are combined with the Central District's quarterly meter reports. Although the Northern District has been calculating its water loss, (which for 2006 was approximately 43 percent) its figures were combined with the Central District in Kentucky-American's annual report which was 14.9 percent. (See attachment.) Water loss through July 2007 was 5.7 percent.

KAWCND has installed a GPS mapping system for its valves, SCADA, and telemetry systems. KAWCND hopes to have one tariff for all of its operations by the end of the year.

KAWCND was given a sample copy of a water loss prevention/leak detection plan.

A follow-up inspection will be conducted within 6 months.

Submitted by

Joe Greenwell

Joe Greenwell
Utility Regulatory and Safety Investigator III

Utility Type: Investor-Owned Water Companies Period: 1/1/2006

Kentucky-American Water Company aka Kentucky American Water

- Water Statistics

15800 Kentucky-American Water Company aka Kentucky American Water Water Statistics (Ref Pg. 35)		
	Gallons (Omit 000`s)	**Percent**
1.Water Produced, Purchased and Distributed:		
2. Water Produced	15,542,842	
3. Water Purchased	75,995	
4.Total Produced and Purchased	**15,618,837**	
6.Water Sales:		
7. Residential	6,143,291	
8. Commercial	4,066,490	
9. Industrial	738,084	
10. Bulk Loading Stations	1,400	
11. Resale	388,879	
12. Other Sales	1,389,073	
13.Total Water Sales	**12,727,217**	
15.Other Water Used:		
16. Utility/water treatment plant		
17. Wastewater plant		
18 System flushing		
19. Fire department		
20. Other	557,667	
21. Total Other Water Used	**557,667**	
23. Water Loss		
24. Tank Overflows		
25. Line Breaks		
26. Line Leaks		
27. Other	2,333,953	
28. Total Line Loss	**2,333,953**	
Note Line 13 + Line 21 + Line 28 Must equal Line 4		
Water Loss Percentage		
33. Line 28 divided by Line 4		**14.9432**

MICROBIAL (*TURBIDITY*) AREA-WIDE OPTIMIZATION PROGRAM

For a water system to be recognized, the system must:

1) Submit a letter of commitment outlining system goals to DWCTA and post system goals at the facility.
2) Fill out the MOR AWOP page, and submit electronically to the appropriate DWCTA contact. (If a system does not have e-mail, they can either mail a disc or contact the appropriate DWCTA Staff and arrange for them to pick up the data)

Sedimentation Performance Criteria**

		Sampling Location			Daily Maximum	
Raw Water Turbidity	Turbidity Goal (% time <NTU)	Individual Basin (Y/N)	Combined Basin (Y/N)	Sampling Frequency	All Readings (Y/N)	4 Hour Readings (Y/N)
>10 NTU (annual average)	95% <2.0 NTU	Y	N	4-hour*	N	Y
<10 NTU (annual average)	95% <1.0 NTU	Y	N	4-hour*	N	Y

*Set a schedule for individual basins 4-hr readings, this should coincide with the individual and CFE 4-hr readings.
**Sedimentation performance criteria will be determined on an individual basis based, on design criteria.

Filtration Performance Criteria**

	Sampling Location			Daily Maximum		
Turbidity Goal (% time <NTU)	Individual Filters (IFE) (Y/N)	Combined Filter (CFE) (Y/N)	Frequency of Measurement	All Readings (Y/N)	4-Hour Readings (Y/N)	Maximum Filtered Water Reading
95% <	Y	Y (if available)	4-hour*	N	Y	0.30 NTU

*Set a schedule for individual filter & CFE 4-hour readings from the on-line monitors; this should coincide with the sedimentation basin readings.
**If DOW has approved the use of on on-line CFE for 4-hour compliance turbidity reporting, AWOP sampling must coincide with the previously approved schedule.

Filter Backwash Optimization Goals

Backwash Initiated At	Turbidity 15 Minutes After Return to Service
0.10 NTU	0.10 NTU

Contacts:

ENERGY AND ENVIROMENT CABINET
DEPARTMENT FOR ENVIRONMENTAL PROTECTION
Division of Water

Recognizes

Kentucky-American Water Company
Northern District - KY0940430

For meeting the Area-Wide Optimization Program goals for both settled and filtered water in 2010 and being considered a "totally optimized plant" for turbidity/microbial removal

Julie W. Roney
Coordinator, Drinking Water Program

Director, Division of Water

KENTUCKY
AMERICAN WATER

Kentucky American Water
2300 Richmond Road
Lexington, KY 40502
www.amwater.com

P 859-268-6373
F 859-268-6374

August 8, 2011

Mr. Ronnie Thompson
Division of Water Surface Water Permits Branch
200 Fair Oaks Lane
Fourth Floor
Frankfort, KY 40601

RE: KPDES No. KYG640069
AI ID 34054
Northern Division Water Treatment Plant
Owen County, Kentucky

Dear Mr. Thompson,

Attached is a copy of the Best Management Practices Plan as required by the permit. Please let me know if there are any questions or concerns.

Please don't hesitate to contact me if there are any questions or concerns.

Sincerely,

Linda Bridwell

Linda Bridwell, PE
Director – Water Quality and Environmental Compliance

C: Mr. Michael Moler, Production Manager, KAW
Mr. Kevin Kruchinski, North Division Superintendent, KAW
Mr. David Shehee, Water Quality Supervisor, KAW

BEST MANAGEMENT PRACTICES PLAN

For

KENTUCKY AMERICAN WATER
NORTHERN DIVISION WATER TREATMENT PLANT
OWENTON, KENTUCKY

JULY 2011

BEST MANAGEMENT PRACTICES PLAN

TABLE OF CONTENTS

1. INTRODUCTION
2. BMP COMMITTEE
3. BMP POLICY STATEMENT
4. RELEASE IDENTIFICATION AND ASSESSMENT
5. GOOD HOUSEKEEPING
6. PREVENTATIVE MAINTENANCE
7. INSPECTIONS AND RECORDS
8. SECURITY
9. EMPLOYEE TRAINING
10. RECORDKEEPING AND REPORTING
11. PLAN EVALUATION
12. PLAN REEVALUATION

ATTACHMENT A

American Water Environmental Policy

ATTACHMENT B

BMP Committee

ATTACHMENT C

Source Risk Assessment Inventory List

ATTACHMENT D

BMP Site Drawing

1. INTRODUCTION

Kentucky American Water (KAW) provides water in Central Kentucky to Lexington, and nine surrounding counties. In order to do that, KAW operates four water treatment facilities. In 2005, KAW purchased the Owenton Water Treatment Plant (Owenton WTP). This is a facility that with a rated capacity of 1.0 million gallons per day. The facility is located at 220 Water Plant Road, Owenton, 40359. The facility withdraws water from the Severn Creek and delivers water into Owenton and surrounding Owen County, Gallatin County, and Grant County.

On May 2, 2011 the Kentucky Energy and Environment Cabinet granted KAW a Kentucky Pollutant Discharge Elimination System General Permit for wastewater discharges associated with drinking water production from water treatment plants in Permit number KYG640069. One of the conditions of the permit was that a Best Management Practices Plan be developed and submitted to the Cabinet Division of Water within 90 days, and implemented within 180 days. This plan has been developed in response to that permit.

2. BEST MANAGEMENT PRACTICES COMMITTEE

A BMP Committee has been established to effectively develop and implement the BMP Plans. The committee will include at least two representatives of the production supervisory team, and one supervisory from Water Quality and Environmental Compliance. The Committee may draw from other internal and external resources to develop and implement the plan at any time.

The BMP Committee will meet no less than once per calendar year to carry out the primary functions listed below, or more frequently as needed.

- The BMP Committee will advise site management, which has overall responsibility and accountability for the plan, on technical matters. The BMP Committee will assist site management in implementation, to update and maintain the plan
- The BMP Committee will evaluate the BMP Plan relative to the safe handling and identification of toxic substances and hazardous materials used at the site. The committee will also review potential spill sources and communicate updates/changes to KAW management
- The BMP Committee is responsible for the overview of procedures, practices and training, developed or provided by either internal or external personnel. These include:
    - o Incident reporting procedures
    - o BMP inspections and record keeping procedures
    - o Personnel training programs
    - o Incident response and review
    - o Clean-up, disposal and notification procedures
    - o Good housekeeping, security practices and preventative maintenance measures
- The BMP Committee will review all environmental incidents to determine the need for revision or corrections to this plan, and will assist in any interdepartmental coordination of the plan.
- The BMP Committee will meet as necessary, but at least annually. Additional meetings will be held in case of any reportable spill or other incident, to discuss changes or improvements to the BMP Plan, and/or changes in the use of toxic substances or hazardous materials at the Owenton WTP.

The current committee members are listed in Attachment B.

3. BMP POLICY STATEMENT

The Best Management Practices Plan for the Owenton WTP is developed to heighten management and employee awareness of potential pollution causing spill situation, and develop practices to reduce their risk of occurrence.

The BMP for the Owenton WTP addresses all toxic pollutants and hazardous substances used at the site. The BMP is an umbrella document that includes the Stormwater Pollution Prevention Plan and Spill Prevention Control and Countermeasure plans for the plant.

American Water has adopted an Environmental Policy, which is included in Attachment A. This Policy clearly states the Business Objective making environmental management a fundamental part of our business. Within that policy, American Water commits to 1) Ensuring compliance with all relevant environmental laws, regulations, and standards; 2) Sustaining the environment through responsible business practices which promote environmental stewardship with a holistic approach to the prevention of pollution; and 3) Ensuring effective and efficient use of natural resources, including energy. Clearly the development and implementation of the BMP is within the scope and the intention of the Environmental Policy.

4. RELEASE IDENTIFICATION AND ASSESSMENT

Sources of toxic substances and hazardous materials used at the Owenton WTP are identified and evaluated in the BMP. These sources are identified in Attachment C. Each source is evaluated for its potential risk of discharge to receiving waters.

Each point source is evaluated for its risk to the environment, its potential flow path if spilled, secondary containment features, the proposed action to contain or control the spill, and current or recommended measures for reducing the risk of release to the environment via various BMP controls.

Toxic substances and hazardous material locations at Owenton WTP are shown on the site BMP drawing. Contaminant locations shown on the drawing are identified according to the worksheets.

An evaluation of each stored material at the site is given in Attachment C. For all of the assessments, the potential risk to the environment was considered to be very low. Chemicals used in the treatment process have been designed to prevent spills or potential contaminants as part of the treatment design.

Site inspections, good housekeeping, and maintenance of equipment and systems are described in more detail later in this plan. The practices are also important in reducing the potential for leaks or spills of toxic substances and hazardous materials to the environment.

5. GOOD HOUSEKEEPING

The following procedures are pursuant to good housekeeping, to lessen the risk of a spill or pollution-causing incident:

All containers of hazardous materials/waste are sealed/closed and are labeled and managed according to all applicable laws and regulations.

All dry chemicals in opened or punctured bags are stored in a temporary containment area until the chemical is fully used. Bags storing dry chemicals will be

stored on pallets to prevent any interaction with liquids on the floor and to facilitate inspection and good housekeeping.

Drums, bags, or other containers will be stored according to container limitations and arranged to facilitate inspection for leaks or spills.

Walkways and pathways will be maintained free of obstruction.

Spilled liquids shall be controlled immediately to prevent run-off into storm water drains, natural waterways, or ground water.

Horizontal surfaces will be vacuumed or swept to control dry (solid) spills.

All new or used oil storage areas will be clearly marked and maintained in covered drums or containers, and stored in designated areas. All containers are clearly labeled indicating the contents.

Storage areas are inspected at least weekly for leaks, spills, and/or degrading containers. Containers are inspected at least quarterly to ensure the expiration date has not been exceeded.

Returnable containers are returned to the vendor when empty. For containers with removable liners, the liners are removed, classified, and then disposed properly; the containers may then be used for other purposes, recycled, or disposed. All other containers are triple rinsed; these containers may then be reused, recycled, or disposed.

6. PREVENTATIVE MAINTENANCE

Owenton WTP has a variety of audit and site assessment practices to assist with the detection of potential problems. These practices are standard operating procedures to ensure proper operation and maintenance of the Owenton WTP equipment and materials, and prevention of a spill or pollution-causing incident at the plant. These include but are not limited to:

Equipment check every shift with physical sign-off at each equipment site within the plant

Chemical deliveries occur only in the designated chemical area under the supervision of plant personnel.

Plant supervisors and maintenance staff inspect all equipment at least once per week and equipment is maintained per the manufacturers' recommendations within a computer maintenance system.

Plant staff and environmental compliance staff perform quarterly inspections

For additional information, refer to the Owenton WTP SOP Manual located at the plant.

7. INSPECTIONS

Monitoring controls are on all equipment with alarms for releases detected within the containment areas. During each eight hour shift, the plant will be physically observed by the plant operator in its entirety to look for potential leaks within chemical feed

systems. This includes both in contained storage areas and around piping throughout the plant. Once per week, a maintenance inspection will occur as part of preventative maintenance schedule and in the event that an operator notices a problem during his/her shift. Once per quarter, a walk-thru will take place with at least two people including the Director of Water Quality/Environmental Compliance, the Production Manager and the Plant Supervisor. Once annually the BMP committee will do an inspection as part of the annual plan review process. Other audits, site assessments, and inspections will take place on a scheduled basis to ensure environmental compliance and to avoid any spill or pollution causing incidents.

8. PLANT SECURITY

The Owenton WTP plant has at least one employee on site 20 hours per day, seven days per week, and 365 days per year. The plant is enclosed within a fenced perimeter. Employees may only gain access to the plant site with an electronic security badge, and access within the plant is further limited with an electronic locking system.

Adequate lighting is available around the site to assist in the detection of a breach of security including vandals. Chemical deliveries are not accepted at night to eliminate the risk for an external spill that would require additional lighting for clean-up.

Further details regarding security are available to regulatory agencies on an as needed basis and are not provided in this document.

9. EMPLOYEE TRAINING

Training programs are essential for providing employees with a complete understanding of operating procedures, as well as the BMP plan and its objectives. Training sessions for chemical processes focus on notification and immediate response to spills.

Training is given to all new operators on the standard operating procedures, and periodically refreshed thereafter. The specific training on the BMP for the operators occurs at the implementation of the BMP and at any revision to the BMP. All employees receive general overview training.

10. RECORDKEEPING AND REPORTING

Recordkeeping is critical to maintaining records that are pertinent to actual or potential environmental releases, and are important in evaluating root cause analysis when problems do arise.

Logs of shift inspections are located throughout the plant at each equipment area. Training records and other inspection records are kept at the plant as required. Maintenance records are maintained through a computerized system implemented in 2011. Incident records will be maintained at the plant by incident, including internal correspondence, formal agency notifications and responses, and investigation reports.

The BMP plan will be updated periodically and correspondence and reports relating specifically to the BMP plan will be kept with the BMP plan at the plant. It will be the plant supervisor's responsibility to establish and maintain the BMP plan file and updated records.

11. PLAN EVALUATION

The BMP plan has been developed in coordination with the Northern Division superintendent, the Production Manager, the Director of Water Quality and Environmental Compliance, and the Water Quality Supervisor. The plan's effectiveness will be evaluated based on permit compliance with the discharge permit, and containment of any spills that prevent the discharge into the environment. Because the plant is fairly new, it is not anticipated that the BMP plan implementation will result in a reduction of expenses at the plant.

12. PLAN REEVALUATION

At a minimum, the plan will be reevaluated annually as part of the annual inspection process and committee meeting. Additionally, it the plan should be re-evaluated following a plant expansion, a significant change in the nature or quantity of pollutants discharged, following significant treatment modifications, following a revision to the existing permit, new legislation approved at a local, state or federal level that is related to BMPs, or any incident that resulted in a release to the environment. The amended plan will be subsequently filed with the Kentucky Division of Water.

ATTACHMENT A

AMERICAN WATER ENVIRONMENTAL POLICY

AMERICAN WATER

Title: **Environmental Policy**

Functional Area: **Operations – Service Delivery – General**

Policy Number: **ops_svd_gen_po_01_environmntal_2008_05_30.doc**

SCOPE

This policy applies to all personnel and all functional areas within American Water Works Company, Inc. and its controlled subsidiaries (together "American Water" or the "Company") including all regulated and non-regulated business.

POLICY STATEMENT

Business Objective:

As a company that provides water and wastewater utility services to customers in the United States and Canada, American Water contributes to, and relies on, the quality of the physical environment, making environmental management á fundamental part of our business. As such, it is imperative that each operating unit within American Water carry out its operations in a manner that limits the impact that American Water has on the environment. The objective of this policy is to clearly outline the roles and responsibilities of the different operating units to support this effort. American Water commits to:

1. *Ensuring compliance with all relevant environmental laws, regulations, and standards.*
   1.1. The requirements of all environmental laws, regulations, and standards pertaining to each operation or activity must be clearly understood and implemented. In addition, compliance with these requirements must be monitored and reported on a regular basis. Compliance with all new standards will be met by the required date as set by applicable regulations and regulatory agencies.
2. *Sustaining the environment through responsible business practices which promote environmental stewardship with a holistic approach to the prevention of pollution.*
   2.1. American Water operations and investments strive to promote environmental stewardship on American Water's owned land, where our operations, activities, or practices could impact the environment, and in our business offerings.
   2.2. American Water will expect and encourage similar standards to our own from our partners, suppliers, agents, and contractors.
   2.3. We will discuss our environmental performance and the implementation of this policy with our stakeholders.
3. *Ensuring effective and efficient use of natural resources, including energy.*
   3.1. Natural resources include water, energy, and land. Use of energy can contribute to climate change through the emission of greenhouse gases which could have serious implications for us and our customers, as it could affect the availability and quality of water resources. By working to achieve a high level of energy efficiency, promoting renewable energy generation, and utilizing transport in a sustainable manner, American Water can help to ensure that our contribution to climate change is minimized.
   3.2. Projects for capital investments strive to minimize the impact on resource consumption including water use, selection of environmentally compatible materials, waste

AMERICAN WATER

production, and energy efficiency for both the construction of the facilities and within the facility itself.

3.3. Sustainable water resource management is a central element of our business as well as our environmental strategy. This management includes watershed protection and partnering with communities in protection activities, development of sustainable water resources, and demand management programs including reducing leakage and promoting water conservation and use efficiency with our customers.

3.4. Land resources are used both for the development of our operations and for the management of the wastes produced during our activities. Effective waste management is therefore essential. Recycling, reuse, incineration, or biodegradation with energy recovery are encouraged in our operating strategies.

Statement:

Given the above commitments, each operating unit is responsible for identifying and managing its environmental impacts in a systematic way through the implementation of an Environmental Management Plan that includes:

1. Establishing responsibility for environmental management within the business unit;
2. Establishing a register of applicable Federal, state, and local environmental requirements;
3. Establishing environmental objectives and training to meet regulatory requirements and enhance environmental stewardship;
4. Monitoring and reporting on performance and taking corrective action where necessary;
5. Establishing an internal audit mechanism; and
6. Undertaking an annual management review to ensure performance is continually improved.

For drinking water and wastewater systems, Environmental Management Plans are developed at the system level, but include specific facility level information regarding sampling requirements and the person(s) who will be responsible for ensuring required sampling occurs. Environmental Management Plans are also developed at other operating centers as needed. Environmental Management Plan Templates are posted on the American Water Intranet.

MONITORING

The State / American Water Enterprises Group Presidents or their designee are accountable for ensuring that the environmental management plans have been developed and are being implemented at all drinking water systems, wastewater systems, and, as needed, operating centers, and that the plans have been reviewed and updated at a minimum of once per year.

The Environmental Program Leads will be responsible for maintaining the Environmental Management Plans and reporting that each plan has been reviewed and updated at a minimum of once per year. However, each functional area is responsible for providing updates to the Environmental Management Plan highlighting new requirements / responsibilities, reporting progress against goals and indicting any changes in responsible parties.

REPORTING/METRICS

The Environmental Program Leads will certify annually that the operating unit has developed and is implementing appropriate Environmental Management Plans and that the plans have been reviewed within the past year.

AMERICAN WATER

Every American Water employee is responsible to immediately report incidents of non-compliance with the Environmental Management Plan through the Ethics Hotline (877 207-4888). This includes, but is not limited to, failure to perform required sampling, notification of non-compliance from a regulatory agency, or an event that could have a substantial impact on public health or the environment. These issues must be elevated to appropriate management at the utility subsidiary and Corporate levels.

CONSEQUENCE OF NON-COMPLIANCE

Any employee who violates or circumvents this policy may be subject to disciplinary action up to and including termination.

WAIVER

No waivers will be granted under this policy.

REFERENCES

US Environmental Protection Agency
Canada Environmental Assessment Agency

DEFINITIONS

None

REVIEW/UPDATE

Review no later than three (3) years from approval / last review.

Approved by: Service Company Board

Original Adopted:	May 30, 2008
Revised Adopted:	Not applicable
Date of Last Review:	Not applicable
Effective Date:	May 30, 2008
Prepared By:	Innovation & Environmental Stewardship

Disclaimer

American Water reserves the right to change, revise or discontinue this Policy for any reason whatsoever. No employee, manager or other agent of American Water, other than the Service Company Board (and, if applicable, the executive having authority to approve this policy) has the authority to enter into any agreement contrary to this Policy.

This Policy supersedes and voids all previous policies and practices, which may be inconsistent in any way with that stated herein.

ATTACHMENT B

BEST MANAGEMENT PRACTICE PLAN COMMITTEE

Owenton Water Treatment Plant
Best Management Practices Plan Committee

1. Linda Bridwell, Director of Water Quality and Environmental Compliance (Chair)
   2300 Richmond Road
   Lexington, KY 40502
   859-268-6373
   Linda.bridwell@amwater.com

2. Michael Moler, Production Manager
   2300 Richmond Road
   Lexington, KY 40502
   859-335-3418
   Michael.moler@amwater.com

3. Kevin Kruchinski, Northern Division Superintendent
   16035 S US 127
   Owenton, KY 40359
   502-484-8373
   Rkevin.kruchinski@amwater.com

Other Technical Resources:

David Shehee, Water Quality Supervisor
2300 Richmond Road
Lexington, KY 40502
859-335-3660
David.shehee@amwater.com

ATTACHMENT C

SOURCE RISK ASSESSMENT INVENTORY LIST

RELEASE POTENTIAL IDENTIFICATION AND ASSESSMENT WORKSHEET												
Steps 1 and 2		IDENTIFICATION AND ASSESSMENT FOR CURRENT RELEASES				IDENTIFICATION AND ASSESSMENT FOR POTENTIAL RELEASES						
		Steps 1 and 2	Step 3	Step 4	Step 5	Steps 1 and 2	Step 3				Step 4	Step 5
Process	Pollutants	Current Amount Released	Priority Based on Pollutant Toxicity	Priority Based on Pollutant Receptors	Priority Based on Current Amount Released	Potential Amount Released	Priority Based on Pollutant Toxicity	Current Controls	Confidence Rating of Controls	Priority Based on Potential Amount Released	Prirrioty Based on Potential Pollutant Receptors	Priority Based on Potential Release
Chemical Delivery	Chlorine	None	High	Low	Low	150lb cylinder	High	Cylinders are unloaded and moved individually	High	Medium	High	Low
	Fluoride	None	Medium	Low	Low	55 gallon drum	Medium	Drums are unloaded individually into a contained area.	High	Medium	High	Low
	Ferric Chloride Polymer	None	Medium	Low	Low	3,000 gallons	Medium	Truck tanker has vaccuum feed into tank.	Medium	Medium	High	Low
	Carbon	None	Low	Low	Low	45 lb bags	Low	Unloaded individually into contained area	High	Low	High	Low
	Coagulant Polymer	None	Low	Low	Low	55 gallons	Low	Individual drums unloaded	High	Low	Low	Low
	Caustic Soda	None	High	Low	Low	55 gallon	High	Individual drums unloaded	High	Medium	High	Low
	Sodium Thiosulfate	None	Medium	Low	Low	15 gallon container	Low	Containers unloaded individually.	High	Low	Low	Low
	Copper Sulfate	None	Low	Low	Low	5 gallon container	Low	Containers unloaded individually.	High	Low	Low	Low
	Sulfuric acid	None	Medium	Low	Low	55 gallon drum	Medium	Drums are unloaded individually.	Medium	Medium	Low	Low
Water Treatment	Chlorine	None	High	Low	Low	150 lb cylinder	High	Alarm in room that is isolated from rest of plant.	Medium	High	High	Low
	Fluoride	None	Medium	Low	Low	55 gallon drum	Medium	Alert that feed system is not working.	Medium	High	High	Low
	Ferric Chloride Polymer	None	Medium	Low	Low	3,000 gallons	Medium	Alert that feed system is not working.	Medium	High	High	Low
	Carbon	None	Low	Low	Low	45 lb	Low	Alert that feed system is not working.	Medium	High	High	Low
	Coagulant Polymer	None	Low	Low	Low	55 gallon	Low	Alert that feed system is not working.	Medium	Low	Low	Low
	Caustic Soda	None	High	Low	Low	55 gallon	High	Alert that feed system is not working.	Medium	High	High	Low
	Sodium Thiosulfate	None	Medium	Low	Low	15 gallon	Low	Only applied by operator	High	Low	Low	Low
	Copper Sulfate	None	Low	Low	Low	5 gallon	Low	Only applied by operator	High	Low	Low	Low
	Sulfuric acid	None	Low	Low	Low	55 gallon	Low	Alert that feed system is not working.	Low	High	High	Low
Process residuals dewatering	Total Suspended Solids	<50 mg/l	Low	Low	Low	>50 mg/l	Low	Grab sampling, discharge can be terminated to allow for further treatment	High	Medium	Low	Low

KAW_R_PSCDR1#18_072312
Page 39 of 275

	Residual Chlorine	<0.019 mg/l	High	Medium	Low	>0.019 mg/l	Low	Grab sampling, increase dechlorination chemical if too high	High	Medium	Low	Low

KAW_R_PSCDR1#18_072312
Page 40 of 275

ATTACHMENT D

BMP SITE DRAWINGS

NOTE

PROPOSED LOCATIONS BASED ON EXISTING RECORD DRAWINGS.

PLANTING SCHEDULE

BOTANICAL NAME	COMMON NAME	QUANT.	SIZE	COND.
ACER RUBRUM	RED MAPLE	3	2"	B&B
QUERCUS RUBRA	RED OAK	5	2"	B&B
FRAXIUS PENNSYLVANICA SUMMIT	GREEN ASH	5	2"	B&B
CORNUS FLORIDA	DOGWOOD	11	5'-6'	B&B
CERCIS CARADENSIS	REDBUD	3	5'-6'	B&B
EUONYMOUS ALATUS COMPACTIA	BURNING BUSH	30	36"	CONT.
FORSYTHIA INTERMEDIA	FORSYTHIA	50	36"	CONT.
PRIMUS NIGRA	AUSTRIAN PINE	9	6"	B&B

PROPOSED ACCESS ROAD PAVEMENT &
PROPOSED LOCATION OF NEW CHEMICAL BUILDING
OWENTON WATER TREAMENT PLANT CHEMICAL FEED SYSTEM IMPROVEMENTS
AND CHLORINE SCRUBBER
KENTUCKY AMERICAN WATER
OWENTON, KENTUCKY

STRAND ASSOCIATES, INC.® ENGINEERS

FIGURE 1
5493.107

File: S:\05\451--500\492

OWENTON WATER TREATMENT PLANT
SITE DRAWING BMP-1

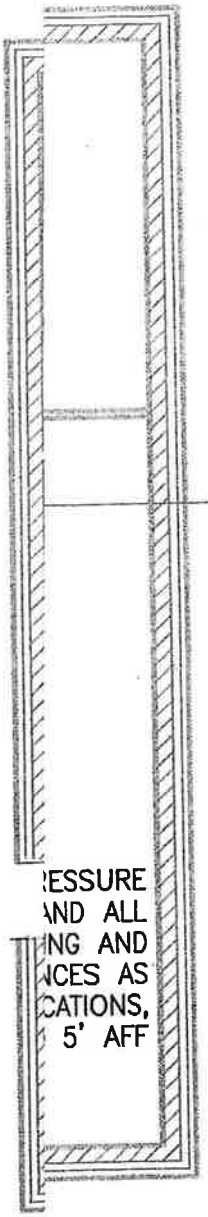
APPROXIMATE LOCATION
OF CONTROL PANEL
ESSURE
ND ALL
NG AND
NCES AS
CATIONS,
5' AFF

EATMENT

NG -2

QUENTON WATER TREATMENT
SITE DRAWING BMP-3

CHANGE IN OWNERSHIP CERTIFICATION

Facility Name	NPDES No.
Kentucky American Water - Northern Division WTP	KYG64
Previous Name (if changed)	County
Owenton City Water Works	Owen

I hereby certify that I will assume ownership and all responsibility for meeting the permit conditions of the Commonwealth of Kentucky relating to water quality at the permitted facility listed above on the effective date indicated.

Name of New Owner or Authorized Representative	Kentucky - American Water Company
Company Name	Kentucky - American Water Company
Address of New Owner (Street, City, State, Zip Code)	2300 Richmond Road, Lexington, Kentucky, 40502
Telephone No. of Owner/Authorized Representative	(859) 268 - 6339
Location Address of Facility	102 Main Street, Owenton, Kentucky 40359
Effective Date of Transfer	9/15/05
Previous Owner Name	Owenton Water Works

Indicate the address where the Discharge Monitoring Report (DMR) forms should be sent. (**Complete only if different from owner name and address listed above.**) These DMR forms are preprinted with permit limitations and mailed out each quarter (semi-annually for individual residences).

Alternate DMR Mailing Name	Marshall Gibson
Alternate DMR Mailing Address	102 Main Street Owenton, Kentucky 40359

Signature of New Owner or Authorized Representative	Date
Vice-President	11/11/05

Acknowledged before me this 11th day of November, 2005

Notary Public Patricia Ballard Commission Expires: January 28, 2008

Notary Seal

Questions on completing this form? Contact the KPDES Branch at (502) 564-3410.

Complete and return this form to: Division of Water, KPDES Branch
Frankfort Office Park
14 Reilly Road
Frankfort, KY 40601

CHANGE IN OWNERSHIP CERTIFICATION

Facility Name	NPDES No.
Kentucky American Water - Northern Division WTP	#0874
Previous Name (if changed)	County
Owenton City Water Works	Owen

I hereby certify that I will assume ownership and all responsibility for meeting the permit conditions of the Commonwealth of Kentucky relating to water quality at the permitted facility listed above on the effective date indicated.

Name of New Owner or Authorized Representative	Kentucky - American Water Company
Company Name	Kentucky - American Water Company
Address of New Owner (Street, City, State, Zip Code)	2300 Richmond Road, Lexington, Kentucky, 40502
Telephone No. of Owner/Authorized Representative	(859) 268 - 6339
Location Address of Facility	102 Main Street, Owenton, Kentucky 40359
Effective Date of Transfer	9/15/05
Previous Owner Name	Owenton Water Works

Indicate the address where the Discharge Monitoring Report (DMR) forms should be sent. **(Complete only if different from owner name and address listed above.)** These DMR forms are preprinted with permit limitations and mailed out each quarter (semi-annually for individual residences).

Alternate DMR Mailing Name	NA
Alternate DMR Mailing Address	NA

Signature of New Owner or Authorized Representative	Date
Vice-President	11/11/05

Acknowledged before me this 11th day of November, 2005

Notary Public Patricia S. Ballard Commission Expires: Jan. 28, 2008

Notary Seal

Questions on completing this form? Contact the KPDES Branch at (502) 564-3410.

Complete and return this form to: Division of Water, KPDES Branch
Frankfort Office Park
14 Reilly Road
Frankfort, KY 40601

Kentucky American Water

April 12, 2006

Rita Hockensmith
Water Quantity Management Section
Division of Water
14 Reilly Road
Frankfort, KY 40601-1190

Re: Water Withdrawal Permits for KAW Northern Division
Permits #0863 and #0874

Dear Ms. Hockensmith:

Pursuant to your letter of March 13, 2006, enclosed are the applications regarding the revisions to the above-referenced permits due to the change in ownership from the City of Owenton to Kentucky-American Water Company.

As we discussed, our copies of the USGS maps referenced on page seven are not very good copies. Would it be possible for you to attach the originals from your files to these revised permit applications? If this is not appropriate, we can forward to you completely new maps.

Operational questions regarding the application may be answered by David Shehee (phone 859-608-5776) and administrative questions about the forms may be answered by me. Please do not hesitate to call me at 859-268-6339.

Thank you for your cooperation.

Sincerely,

Herb Miller

Herbert A. Miller, Jr.
Vice-President and Corporate Counsel
2300 Richmond Road
Lexington, KY 40502

cc: D. Griffin
R. Buchanan
D. Shehee ✓

RWE GROUP

APPLICATION FOR A PERMIT TO WITHDRAW WATER

Natural Resources and Environmental Protection Cabinet

14 Reilly Road **Division of Water** Frankfort, KY 40601

Action Desired (check one): __ New Permit
__X__ Revision to Permit __874__ Number

Division Use Only
Permit No. _____

Applicant Information

Kentucky American Water – Northern Division
Name of Person or Organization Requesting Permit (This name will be on any permit resulting from this application.)

220 Water Plant Drive	Owenton	KY	40359
Street Address	City	State	Zip Code

Standard Industrial Classification (SIC) Code __4941__

Permit Request

Why is this new permit /permit revision necessary? Kentucky American Water – Northern Division (PWSID 0940430) purchased Owenton Water (PWSID 0940337) September 15, 2005.

If facility uses multiple sources of water, **complete one application form for each water source.**
If multiple sources are used, is this application for a primary __ __ or secondary __X__ source? (check one)

Date proposed water withdrawals would begin __2006__
If facility constructed __X__ or proposed _____ ?

Amount of water facility wishes to withdraw on an average operational day in each month.
Give amounts the facility expects to use **in gallons per day**:

Jan. 800,000	April 800,000	July 900,000	Oct. 900,000
Feb. 800,000	May 850,000	Aug. 900,000	Nov. 800,000
Mar. 800,000	June 850,000	Sept. 900,000	Dec. 800,000

Maximum Daily Pumping Rate: 1.44 MGD

Please provide some detail regarding the proposed withdrawal amounts and the pumping schedule.
Pumpage rates have increased steadily since the last permit application.

Please accurately complete the sections of this application that pertain to your source(s). Questions about this application or the water withdrawal permitting program may be addressed to the Water Quantity Management Section of the Division of Water at (502) 564-3410.

THIS PAGE TO BE COMPETED BY **SURFACE WATER APPLICANTS** ONLY.

Source of Water

Location of Intake

Owen (County) | 38°31'23.35" (Latitude) | 84°50'58.75" (Longitude)

Type of Source (check one) Stream _____ Impoundment __X__ Spring _____

Name of Water Source Thomas Lake

Stream Mile (if known) 6.3 of the North Fork of Severn Creek

Describe Location if Stream Mile Is Unknown _____

Water Supply Availability

Does this facility have access to records of stream flow? Yes _____ No __X__

If yes, how long has flow data been collected? _____

Method or device for recording flow? _____

Describe data records. _____

Impoundment (Complete only if withdrawal is from an impoundment.)

NOTE: If the applicant shown on Page 1 does not own the impoundment, proof of permission to withdraw must be attached to this application. SEE EXHIBIT A FROM KAW-OWENTON ASSET PURCHASE AGREEMENT 5/17/05.

Severn Creek (Name of Impounded Stream (if applicable)) | Thomas Lake (Name of Impoundment) | 70,000,000 (Approximate Impoundment Volume)

City of Owenton
Name and Address of Impoundment Owner

Stream construction permit or dams inventory number (if known)_____ Date Constructed _____

How was volume determined? Estimated

Impoundment Drainage Area Wooded area

If appearance is important, give maximum amount of drawdown permissible. _____

Withdrawal Statistics

Is pump portable? Yes _____ No __X__ Rated Capacity of Pump _____

Provide elevation of each intake structure (in feet above mean sea level) _____

Depth of water over intake at normal pool or average flows _____ (if applicable)

Minimum depth of water (over intake) required for operation _____ (if applicable)

THIS PAGE TO BE COMPLETED BY **GROUNDWATER APPLICANTS** ONLY.

Source of Water

If the water source for this withdrawal is a well or field of wells, complete the following table (attach extra sheets if necessary). Number of wells _____
If the source is a spring, complete **Spring-fed Sources**, page 7.
If the source is not a well or a spring, attach a detailed description of the source and method of withdrawal.

County: _____ Certified Well Driller (if drilled since 1985) _____

Well ID	EXAMPLE Well #1				
Latitude Longitude	37°31'22" N 85°32'19" W				
AKGWA # (if known)	0001-1038				
Status*	A				
Existing or Proposed	existing				
Well Diameter	10"				
Well Depth	120'				
Casing Depth	80'				
Screened Interval	80' - 100'				
Screen Diameter	8"				
Elevation of Well	650'				
Static Water Level	60'				
Pump Type & Location	submersible				
Pump Capacity	100 gpm				
Average Daily Withdrawal	70,000 gpd				
Metered Y/N	yes				
Type of Meter	Johnson				
Use of Water	heat/cool				
Date of Well Construction	June 1996				
Log Available Y/N	yes				
Drilling Method	air rotary				
Well Development Method	surging				

*Status: A = Active; I = Inactive; P = Plugged; D = Dry

THIS PAGE TO BE COMPLETED FOR **SPRING-FED SOURCES** ONLY.

pring-Fed Sources AKGWA # _____ (if known)

Spring Characteristics County: _____ (if known)

Spring Name: _____

Spring Owner: _____

Address: _____

City: _____ State: _____ Zip Code: _____

Intake Location: Latitude _____ Longitude _____

Describe Intake: _____

Spring Type: Seep _____ Gravity _____ Bluehole (artesian) _____

Is this spring the headwaters of a surface stream? Yes _____ No _____

If yes, what is the name of the stream? _____

Type of flow: Perennial _____ Seasonal _____ Intermittent _____

Spring discharges from: Cave ____ Rock ____ Fracture ____ Soil ____ Alluvium ____

Mine Adit ____ Other ____

Spring discharges into: Stream ____ Pond or Lake ____ Sinkhole ____ Other _____

Name of stream, pond, or lake _____

Average Discharge (in cubic feet per second or gallons per day) _____

How was flow determined? Measured _____ Type of Meter: _____

Estimated _____ Describe Calculations: _____

Have any water (dye) traces been run to this site? Yes _____ No _____

If yes, complete the following.

Name of Person Conducting Trace: _____

Address: _____

City: State: _____ Zip Code: _____

Date of Trace: _____ Trace #: _____

Are there other users of this spring? Yes ____ No ____ If yes, give names, amounts, and type of use:

_____

_____

THIS PAGE IS TO BE COMPLETED BY BOTH **SURFACE AND GROUNDWATER APPLICANTS.**

Other Intakes and Back-up Water Sources

Other water withdrawal permits held by this facility (give water withdrawal permit numbers):

Applying for Severn Creek (existing permit 0863).

Other, non-permitted intakes (give location and explanation):

Public Water Supply Information (Complete only if the applicant is a public water supplier.)

Number of People Served 8,181 Number of Connections Served 3,446

Water Treatment Plant Capacity 1.44 MGD Current Average Production 800,000 GPD

Finished Water Storage Capability (number, type, and capacity):

12, Tanks, 2,026,000 gallons of storage

List the approximate percentage of water distributed to each of the following:

Residential	64 %	Public/Institutional	7 %
Industrial	2 %	Other	19 %
Commercial	6 %	Sold to other water suppliers	2 %

If water is to be sold to other water systems or suppliers, list them:*

1. Peaks Mill Water District
   Name of Supplier
   310 Perkins Lane
   Address
   Mount Sterling, Kentucky 40353
   2,670
   Gallons per day Sold

3. _____
   Name of Supplier
   _____
   Address
   _____
   _____
   Gallons per day Sold

If additional water is purchased from other water systems, list them:*

1. Gallatin County Water District
   Name of Supplier
   4500 Highway 455
   Address
   Sparta, KY 41086
   18,121
   Gallons per day Sold

2. Carroll County Water District #1
   Name of Supplier
   205 Main Cross Street P.O. Box 350
   Address
   Ghent, KY 41045
   49,226
   Gallons per day Sold

3. Georgetown Municipal Water Service
   Name of Supplier
   P.O. Box 640
   Address
   Georgetown, KY 40324
   98,770
   Gallons per day Purchased

4. _____
   Name of Supplier
   _____
   Address
   _____
   _____
   Gallons per day purchased

THIS PAGE TO BE COMPLETED BY **ALL APPLICANTS.**

Siting

Attach a U.S. Geological Survey 71/2 minute quadrangle map, or a legible photocopy of the portion of the map containing this site. USGS maps can be obtained from the Kentucky Geological Survey, 228 Mines and Minerals Resource Building, UK, Lexington, KY, 40506 (phone 859-257-5500). Mark the map with the following information, where available:

a. Surface intake or wells
b. Pumping sites
c. Raw water storage facilities
d. Water treatment plants
e. Wastewater discharge site(s)
f. Dams and reservoirs
g. Service Boundaries
h. Back-up water supply intakes

Give name of map quadrangle: _____

Water Transfer from Intake to Discharge

In the area below, sketch and label a map of the proposed water intake(s) and transfer of water at the permit site. (Sketch map may be drawn by hand and/or attached.) SEE EXHIBIT B ATTACHED. UNCHANGED.

Include the following:

a. Location of water intake site(s)
b. Location of pump(s) and metering device(s)
c. Course and direction of flow at the site (do not show flow inside of buildings)
d. Course and amount of water being recycled
e. Location of the discharge site(s) and average amount of water being discharged

THIS PAGE TO BE COMPLETED BY **ALL APPLICANTS**.

Water Use Information

Purposes for which the water is to be used:

Residential, Commercial, Industrial, Public

Major products or services, and production rate (if applicable):

Does this facility have an emergency response plan for drought or other shortage? Yes X No ____

If yes, summarize the plan or attach a full description. ____

Storage Information

Raw (untreated) water storage capability, specify storage ponds or tanks and city the capacity of each.

Discharge Information

Discharge to city sewer? Yes X No ____

If no, give name of stream receiving discharge. ____

River mile or latitude/longitude. ____ County Owen

Average amount of water returned (gallons per day) ____

If this amount varies from average withdrawal, explain why. ____

Method used to estimate discharge rate: Weir

Discharge permit numbers: KY 0028312 ____ ____

Irrigation Information (Complete only if withdrawal is being used for maintaining grasses or other plants.)

Number of acres being irrigated: ____

The average rate of application (for example, 2 inches per acre per week, May through August):

____ per ____ per ____, ____ through ____.

Inches or gallons (circle one) | area | time (day, week) | month | month

Ownership Change

Reason for Ownership Change: Water plant purchased by Kentucky American Water

Owenton Water Works
Print Seller Name

Dave Totten - Mayor - City of Owenton
Signature of Seller

Kentucky American Water Co.
Print Purchaser Name

Vice-President
Signature of Purchaser

Reporting of Water Withdrawals

KRS 151.160 requires that permit holders report actual water withdrawals.

Provide the name and address of the contact person to be in charge of reporting actual withdrawals to the Division.

Richard Buchanan — Contact Person
Production Supervisor — Title

102 North Main Street, Owenton, KY 40359 — Address

(502) 484 - 5118 — Telephone

How is withdrawal measured? (check one) Meter X Other (describe) _____

List the make and model of meter: Badger PMT-C-LO-LOSS Flow Tube 14 x 6.958 x 12

Age of meter 13 years Date of most recent calibration July 2005

Explain calculations for estimating daily withdrawal amounts. _____

Application Verification

Kentucky-American Water Company by Herbert A. Miller, Jr.
Name of Person or Organizational Representative Requesting Permit

Title Vice President

Signature Herbert A. Miller, Jr. Date 4/12/07

If application is prepared by a consultant or other person independent of the facility requesting permit, provide contact information below.

Name of consulting company or other organization

Address

Telephone

If approved, who do you wish the permit be mailed to? Consultant ____ Applicant X

Mail completed application to:

Watershed Management Branch
Kentucky Division of Water
14 Reilly Road
Frankfort, Kentucky 40601

~~Seller's customers. Within the week prior to the Closing Date, Buyer's meter readers,~~ accompanied at the Seller's election, by Seller's meter readers, will read all customer meters and provide copies of those meter readings to Seller. Seller will bill all customers for water service as reflected in the final meter reading. Seller will, after satisfaction of all routine customary expenses of Seller through the Closing Date use any monies received from these billings in addition to all monies from all accounts receivable from prior billings for the payment of any other of the Seller's liabilities remaining at the closing. Buyer will be entitled to all revenue from ~~water services provided by Buyer on and after the Closing Date~~.

8. **OPERATION OF UPPER AND LOWER THOMAS LAKES.** Seller now owns and shall continue to own after the Closing Date all land and structures which directly impound the water in Upper and Lower Thomas Lakes ("the Lakes"), but grants to Buyer access to and the right to use the Lakes as a source of supply at no cost to Buyer which access and right include the right to pump water into and withdraw water from the Lakes and the right to increase or decrease the level of water in the Lakes. Seller agrees to maintain the structures which impound the Lakes, including the dam, in a safe and operational manner and in compliance with all applicable governmental requirements. Seller further agrees to maintain the land surrounding the Lakes in like fashion and agrees not to take or allow any action that would cause any pollution or detrimental effect on the quality of the water in the Lakes.

~~9. **OFFICE IN OWENTON**. Buyer agrees to maintain an office in Owenton for~~ walk-in customer service purposes as long as is economically ~~praeticable~~ at the discretion of the Buyer but for at least 10 years after the Closing Date.

10. **GRANT REPAYMENT**. In the event that any grant existing at the date of ~~closing is later required to be repaid, Seller assumes all liability for such repayment.~~

OWENTON HYDRAULIC SCHEMATIC
RAW WATER SYSTEM
RIVER INTAKE (NOW KAWC)

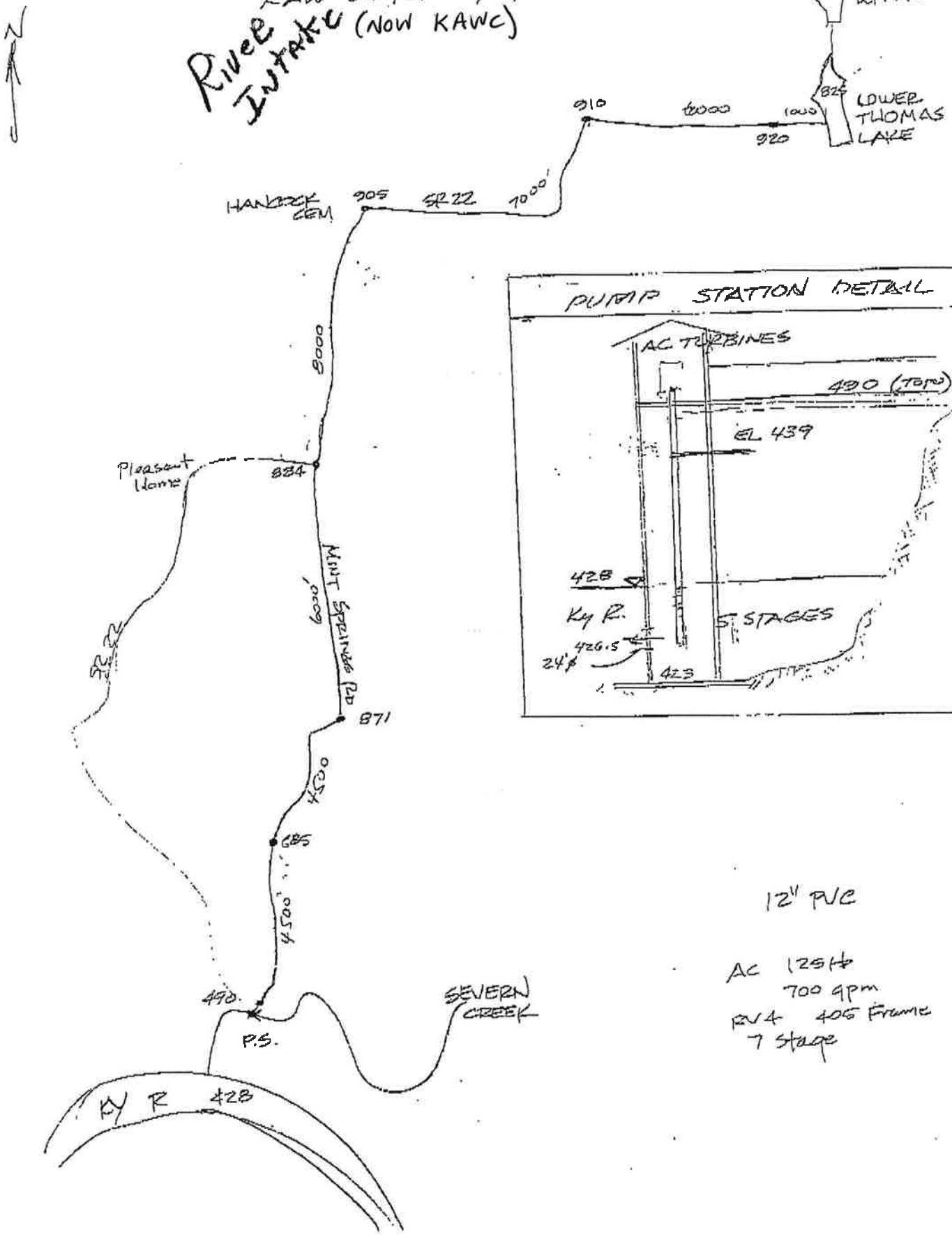

APPLICATION FOR A PERMIT TO WITHDRAW WATER

Natural Resources and Environmental Protection Cabinet

14 Reilly Road **Division of Water** Frankfort, KY 40601

Action Desired (check one): __ New Permit
__X__ Revision to Permit __863__
Number

Division Use Only
Permit No. _____

Applicant Information

Kentucky American Water – Northern Division
Name of Person or Organization Requesting Permit (This name will be on any permit resulting from this application.)

220 Water Plant Drive	Owenton	KY	40359
Street Address	City	State	Zip Code

Standard Industrial Classification (SIC) Code _____

Permit Request

Why is this new permit /permit revision necessary? Kentucky American Water – Northern Division (PWSID 0940430) purchased Owenton Water (PWSID 0940337) September 15, 2005.

If facility uses multiple sources of water, **complete one application form for each water source.**
If multiple sources are used, is this application for a primary __X__ or secondary ____ source? (check one)

Date proposed water withdrawals would begin __2006__
If facility constructed __X__ or proposed _____ ?

Amount of water facility wishes to withdraw on an average operational day in each month.
Give amounts the facility expects to use **in gallons per day**:

Jan. 800,000	April 800,000	July 900,000	Oct. 900,000
Feb. 800,000	May 900,000	Aug. 900,000	Nov. 800,000
Mar. 800,000	June 900,000	Sept. 900,000	Dec. 800,000

Maximum Daily Pumping Rate: 1.44 MGD

Please provide some detail regarding the proposed withdrawal amounts and the pumping schedule.
Pumpage rates have increased steadily since the last permit application. Water is pumped from Severn Creek into the lower Thomas Lake continuously.

Please accurately complete the sections of this application that pertain to your source(s). Questions about this application or the water withdrawal permitting program may be addressed to the Water Quantity Management Section of the Division of Water at (502) 564-3410.

THIS PAGE TO BE COMPETED BY **SURFACE WATER APPLICANTS** ONLY.

ource of Water

Location of Intake

Owen (County) | 38°28'05.40" (Latitude) | 84°55'01.53" (Longitude)

Type of Source (check one) Stream ___X___ Impoundment _____ Spring _____

Name of Water Source Severn Creek

Stream Mile (if known) 0.55L

Describe Location if Stream Mile Is Unknown _____

Water Supply Availability

Does this facility have access to records of stream flow? Yes _____ No ___X___

If yes, how long has flow data been collected? _____

Method or device for recording flow? _____

Describe data records. _____

Impoundment (Complete only if withdrawal is from an impoundment.)

NOTE: If the applicant shown on Page 1 does not own the impoundment, proof of permission to withdraw must be attached to this application.

Name of Impounded Stream (if applicable) | Name of Impoundment | Approximate Impoundment Volume

Name and Address of Impoundment Owner

Stream construction permit or dams inventory number (if known)_____ Date Constructed _____

How was volume determined? _____

Impoundment Drainage Area _____

If appearance is important, give maximum amount of drawdown permissible. _____

Withdrawal Statistics

Is pump portable? Yes _____ No ___X___ Rated Capacity of Pump 700 GPM

Provide elevation of each intake structure (in feet above mean sea level) EXHIBIT B ATTACHED

Depth of water over intake at normal pool or average flows _____ (if applicable)

Minimum depth of water (over intake) required for operation _____ (if applicable)

THIS PAGE TO BE COMPLETED BY **GROUNDWATER APPLICANTS** ONLY.

Source of Water

If the water source for this withdrawal is a well or field of wells, complete the following table (attach extra sheets if necessary). Number of wells _____
If the source is a spring, complete **Spring-fed Sources**, page 7.
If the source is not a well or a spring, attach a detailed description of the source and method of withdrawal.

County: _____ Certified Well Driller (if drilled since 1985) _____

Well ID	EXAMPLE Well #1				
Latitude Longitude	37°31'22" N 85°32'19" W				
AKGWA # (if known)	0001-1038				
Status*	A				
Existing or Proposed	existing				
Well Diameter	10"				
Well Depth	120'				
Casing Depth	80'				
`creened Interval	80' - 100'				
Screen Diameter	8"				
Elevation of Well	650'				
Static Water Level	60'				
Pump Type & Location	submersible				
Pump Capacity	100 gpm				
Average Daily Withdrawal	70,000 gpd				
Metered Y/N	yes				
Type of Meter	Johnson				
Use of Water	heat/cool				
Date of Well Construction	June 1996				
Log Available Y/N	yes				
Drilling Method	air rotary				
ell Development Method	surging				

*Status: A = Active; I = Inactive; P = Plugged; D = Dry

THIS PAGE TO BE COMPLETED FOR **SPRING-FED SOURCES** ONLY.

pring-Fed Sources AKGWA # _____ (if known)

Spring Characteristics County: _____ (if known)

Spring Name: _____

Spring Owner: _____

Address: _____

City: _____ State: _____ Zip Code: _____

Intake Location: Latitude _____ Longitude _____

Describe Intake: _____

Spring Type: Seep _____ Gravity _____ Bluehole (artesian) _____

Is this spring the headwaters of a surface stream? Yes _____ No _____

If yes, what is the name of the stream? _____

Type of flow: Perennial _____ Seasonal _____ Intermittent _____

Spring discharges from: Cave _____ Rock _____ Fracture _____ Soil _____ Alluvium _____

Mine Adit _____ Other _____

Spring discharges into: Stream _____ Pond or Lake _____ Sinkhole _____ Other _____

Name of stream, pond, or lake _____

Average Discharge (in cubic feet per second or gallons per day) _____

How was flow determined? Measured _____ Type of Meter: _____

Estimated _____ Describe Calculations: _____

Have any water (dye) traces been run to this site? Yes _____ No _____

If yes, complete the following.

Name of Person Conducting Trace: _____

Address: _____

City: State: _____ Zip Code: _____

Date of Trace: _____ Trace #: _____

Are there other users of this spring? Yes _____ No _____ If yes, give names, amounts, and type of use:

_____

_____

THIS PAGE IS TO BE COMPLETED BY BOTH **SURFACE AND GROUNDWATER APPLICANTS.**

Other Intakes and Back-up Water Sources

Other water withdrawal permits held by this facility (give water withdrawal permit numbers):

Applying for Thomas Lake (existing permit 0874).

Other, non-permitted intakes (give location and explanation):

Public Water Supply Information (Complete only if the applicant is a public water supplier.)

Number of People Served 8,181 Number of Connections Served 3,446

Water Treatment Plant Capacity 1.44 MGD Current Average Production 800,000 GPD

Finished Water Storage Capability (number, type, and capacity):

12, Tanks, 2,026,000 gallons of storage

List the approximate percentage of water distributed to each of the following:

Residential	64 %	Public/Institutional	7 %
Industrial	2 %	Other	19 %
Commercial	6 %	Sold to other water suppliers	2 %

If water is to be sold to other water systems or suppliers, list them:*

1. Peaks Mill Water District
   Name of Supplier
   310 Perkins Lane
   Address
   Mount Sterling, Kentucky 40353
   2,670
   Gallons per day Sold

3. _____
   Name of Supplier
   _____
   Address
   _____
   _____
   Gallons per day Sold

If additional water is purchased from other water systems, list them:*

1. Gallatin County Water District
   Name of Supplier
   4500 Highway 455
   Address
   Sparta, KY 41086
   18,121
   Gallons per day Sold

2. Carroll County Water District #1
   Name of Supplier
   205 Main Cross Street P.O. Box 350
   Address
   Ghent, KY 41045
   49,226
   Gallons per day Sold

3. Georgetown Municipal Water Service
   Name of Supplier
   P.O. Box 640
   Address
   Georgetown, KY 40324
   98,770
   Gallons per day Purchased

4. _____
   Name of Supplier
   _____
   Address
   _____
   _____
   Gallons per day purchased

THIS PAGE TO BE COMPLETED BY **ALL APPLICANTS.**

Siting

Attach a U.S. Geological Survey 71/2 minute quadrangle map, or a legible photocopy of the portion of the map containing this site. USGS maps can be obtained from the Kentucky Geological Survey, 228 Mines and Minerals Resource Building, UK, Lexington, KY, 40506 (phone 859-257-5500). Mark the map with the following information, where available:

a. Surface intake or wells
b. Pumping sites
c. Raw water storage facilities
d. Water treatment plants
e. Wastewater discharge site(s)
f. Dams and reservoirs
g. Service Boundaries
h. Back-up water supply intakes

Give name of map quadrangle: _____

Water Transfer from Intake to Discharge

In the area below, sketch and label a map of the proposed water intake(s) and transfer of water at the permit site. (Sketch map may be drawn by hand and/or attached.) SEE EXHIBIT B ATTACHED UNCHANGED.

Include the following:

a. Location of water intake site(s)
b. Location of pump(s) and metering device(s)
c. Course and direction of flow at the site (do not show flow inside of buildings)
d. Course and amount of water being recycled
e. Location of the discharge site(s) and average amount of water being discharged

THIS PAGE TO BE COMPLETED BY **ALL APPLICANTS**.

ter Use Information

Purposes for which the water is to be used:

Residential, Commercial, Industrial, Public

Major products or services, and production rate (if applicable):

Does this facility have an emergency response plan for drought or other shortage? Yes __X__ No ____

If yes, summarize the plan or attach a full description. _____

Storage Information

Raw (untreated) water storage capability, specify storage ponds or tanks and city the capacity of each.

Lower Thomas Lake – 7 days supply

Discharge Information

Discharge to city sewer? Yes __X__ No ____

If no, give name of stream receiving discharge. _____

River mile or latitude/longitude. _____ County Owen

Average amount of water returned (gallons per day) _____

If this amount varies from average withdrawal, explain why. _____

Method used to estimate discharge rate: Weir

Discharge permit numbers: KY 0028312 _____ _____

Irrigation Information (Complete only if withdrawal is being used for maintaining grasses or other plants.)

Number of acres being irrigated: _____

The average rate of application (for example, 2 inches per acre per week, May through August):

_____ per _____ per _____, _____ through _____.

Inches or gallons (circle one) | area | time (day, week) | month | month

Ownership Change

Reason for Ownership Change: Water plant purchased by Kentucky American Water

Owenton Water Works
Print Seller Name

Dave Wolter - Mayor, City of Owenton
Signature of Seller

Kentucky American Water Co.
Print Purchaser Name

Kenneth R. Miller, Vice President
Signature of Purchaser

Reporting of Water Withdrawals

KRS 151.160 requires that permit holders report actual water withdrawals.

Provide the name and address of the contact person to be in charge of reporting actual withdrawals to the Division.

Richard Buchanan — Contact Person
Production Supervisor — Title

102 North Main Street, Owenton, KY 40359 — Address

(502) 484 - 5118 — Telephone

How is withdrawal measured? (check one) Meter ___ Other (describe) By pump rate

List the make and model of meter: _____

Age of meter _____ Date of most recent calibration _____

Explain calculations for estimating daily withdrawal amounts. Withdrawals are calculated by pump rate.

Application Verification

Kentucky - American Water Company by Herbert A. Miller, Jr.
Name of Person or Organizational Representative Requesting Permit

Title Vice - President

Signature Herbert A. Miller, Jr. Date 4/17/08

If application is prepared by a consultant or other person independent of the facility requesting permit, provide contact information below.

Name of consulting company or other organization

Address

Telephone

If approved, who do you wish the permit be mailed to? ___ Consultant X Applicant

Mail completed application to: Watershed Management Branch
Kentucky Division of Water
14 Reilly Road
Frankfort, Kentucky 40601

OWENTON HYDRAULIC SCHEMATIC

RAW WATER SYSTEM

River Intake (NOW KAWC)

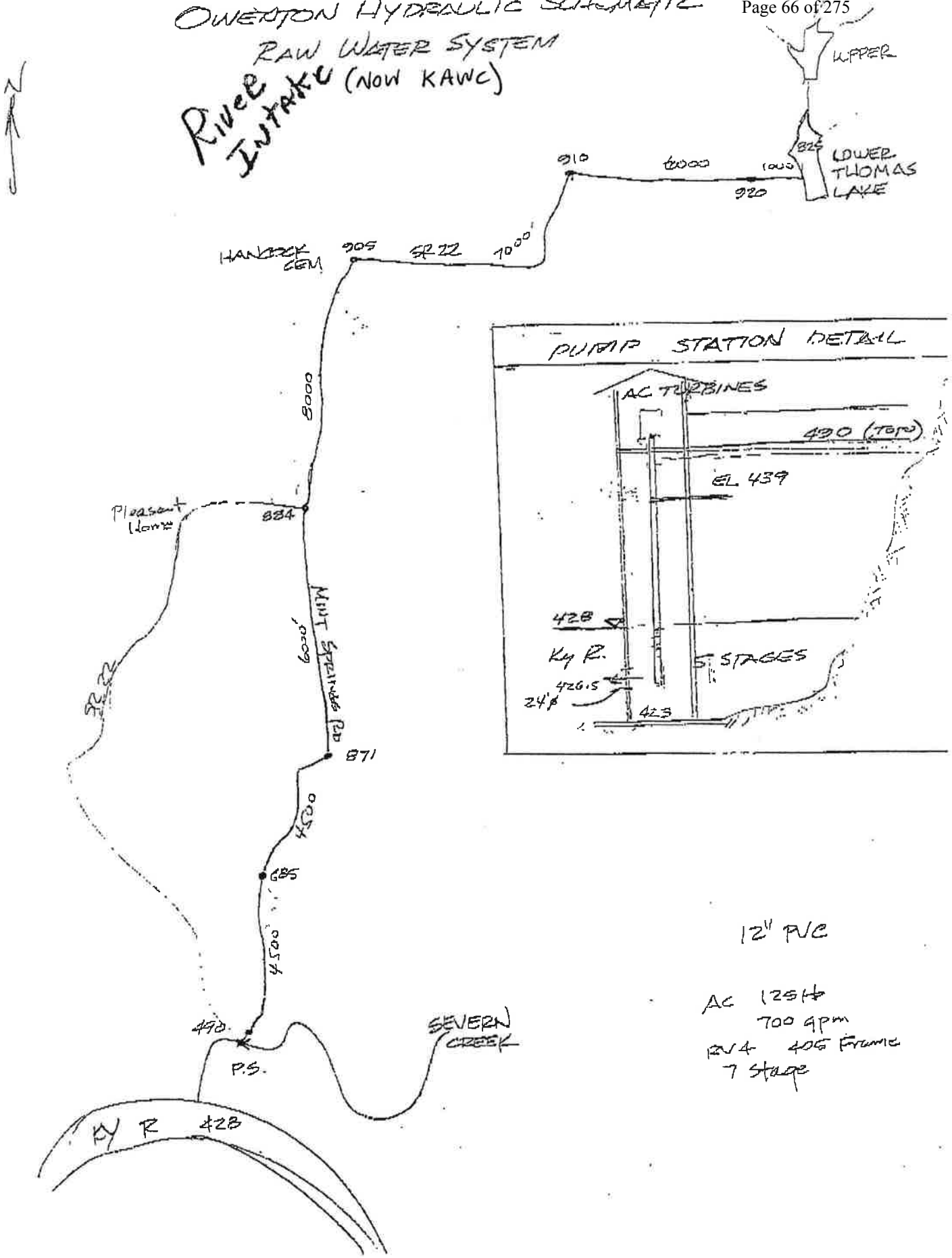

RE: 2,4-D Owenton
Chitti, Brian (EPPC DEP DOW) to: David.Shehee 05/24/2007 11:05 AM

The Division is currently following the 401KAR 8:400 Section 1 (7)(d) regulation. This requires PWSs to submit written requests for reductions in monitoring. PWSs can not change their schedules until they have submitted the request and receive an approval for a reduction in monitoring. This allows us to track changes and edit our database accordingly.

I have placed your letter in the mail.

Brian Chitti

-----Original Message-----
From: David.Shehee@amwater.com [mailto:David.Shehee@amwater.com]
Sent: Thursday, May 24, 2007 10:17 AM
To: Chitti, Brian (EPPC DEP DOW)
Subject: RE: 2,4-D Owenton

Thanks Brian,

I have been having network problems so I didn't get to this E-mail prior to
sending mine.

Regards,

David B. Shehee
Water Quality Supervisor
Kentucky American Water
6300 Cedarcreek Lane
Lexington, Kentucky 40515
(859) 335-3660 office
(859) 335-3388 fax
david.shehee@amwater.com

"Chitti, Brian (EPPC DEP DOW)" <Brian.Chitti@ky.gov>

To <David.Shehee@amwater.com>

cc

05/24/2007 09:29 AM

Subject RE: 2,4-D Owenton

Mr. Shehee,

I have found your request for reduced monitoring to annual. We will use Lora's email correspondence below for the approval for annual monitoring for 2,4-D at the Northern Division, since I can not find an approval letter in the files. You can disregard the Detection Letter I sent on May 8, 2007. You should be sampling for 2,4-D in the 3rd quarter annually, until such time that you have 3 annual samples without a detection and you submit a written request for further reduction in monitoring.

I will send a letter to this affect through the mail. I will also set the Northern Division up with an annual schedule for 2,4-D in the 3rd qtr in the database so this will not happen again if you happen to have another detection.

Brian Chitti

-----Original Message-----
From: Chitti, Brian (EPPC DEP DOW)
Sent: Thursday, May 24, 2007 8:47 AM
To: 'David.Shehee@amwater.com'
Subject: RE: 2,4-D Owenton

Mr. Shehee,

I am working on a response.

Do you happen to have any mail correspondence for Northern Division, such as a request for reduced monitoring for 2,4-D or a letter from DOW saying the Northern Division is on an annual schedule for 2,4-D?

I am having trouble locating such letters. When did the Northern Division form from the previous Owenton and Tri-Valley?

If the Northern Division is currently on an annual schedule from the DOW, then we may be able to disregard the letter I sent on May 8, 2007. Systems can be on an annual schedule for SOCs and have detections and not have to go to quarterly monitoring.

I will need to look harder and see what I can find before I can give you a definite response to this issue.

Respectfully,

Brian Chitti

-----Original Message-----
From: David.Shehee@amwater.com [mailto:David.Shehee@amwater.com]
Sent: Wednesday, May 23, 2007 12:00 PM
To: Chitti, Brian (EPPC DEP DOW)
Subject: Fw: 2,4-D Owenton

Brian,

I recently received the attached correspondence from you regarding a 2,4-D
detection July 12, 2006, in our Northern Division (KY0940430). I have attached an E-mail chain I had with Lora Gowins regarding a previous detect
for this constituent and associated annual sampling. I am also forwarding
another E-mail chain from Lora outlining an approach for detections of constituents below the MCL when you are already performing special monitoring for that constituent. Basically, you have to sample in the quarter of the highest detect and not perform quarterly monitoring for the
new detect. Because both detects were in the third quarter (original detection 08/04/04 of 0.0006 mg/L) we must continue to sample annually for
2007-2009 with no detections. Please let me know if I have misunderstood Lora and the regulations.

(See attached file: State 24D Letter for Northern 05070001.pdf)

Regards,

David B. Shehee
Water Quality Supervisor
Kentucky American Water
6300 Cedarcreek Lane
Lexington, Kentucky 40515
(859) 335-3660 office
(859) 335-3388 fax
david.shehee@amwater.com
----- Forwarded by David Shehee/KAWC/AWWSC on 05/23/2007 11:55 AM -----

	"Gowins, Lora (EPPC DEP DOW)" <lora.gowins@ky.g	
To	ov>	"'dshehee@kawc.com'" <dshehee@kawc.com>, "Gowins, Lora
	11/29/2005 10:39 AM	(EPPC DEP DOW)" <lora.gowins@ky.gov>
cc		"Roney, Julie (EPPC DEP DOW)"

<Julie.Roney@ky.gov>,

SCarr@kawc.com

Subject

RE: 2,4-D Owenton

David, if you have 4 consecutive quarters of 2,4-D monitoring, and all results are reliably and consistently below the MCL, then you may return to
reduced monitoring. (annual)

-----Original Message-----
From: dshehee@kawc.com [mailto:dshehee@kawc.com]
Sent: Tuesday, November 01, 2005 12:17 PM
To: lora.gowins@ky.gov
Cc: julie.roney@ky.gov; SCarr@kawc.com
Subject: 2,4-D Owenton

Lora,

We have completed 4 quarters of sampling for 2,4-D for Owenton Water Works
as of August 2005. We sent a letter in August requesting to go back to annual sampling in October. I know your staff is short, so I wanted some direction on what to do until we receive a letter from the State. Should we
proceed with quarterly sampling until we hear from your office?

I will take your response as direction for all special sampling.

Thanks for your help with this matter.

David Shehee
Water Quality Specialist
Kentucky American Water
6300 Cedarcreek Lane
Lexington, KY 40515
Phone (859) 335-3660
Fax (859) 263-3137
dshehee@kawc.com

RE: 2,4-D Owenton

Chitti, Brian (EPPC DEP DOW) to: David.Shehee 05/24/2007 09:29 AM

History: This message has been replied to and forwarded.

Mr. Shehee,

I have found your request for reduced monitoring to annual. We will use Lora's email correspondence below for the approval for annual monitoring for 2,4-D at the Northern Division, since I can not find an approval letter in the files. You can disregard the Detection Letter I sent on May 8, 2007. You should be sampling for 2,4-D in the 3rd quarter annually, until such time that you have 3 annual samples without a detection and you submit a written request for further reduction in monitoring.

I will send a letter to this affect through the mail. I will also set the Northern Division up with an annual schedule for 2,4-D in the 3rd qtr in the database so this will not happen again if you happen to have another detection.

Brian Chitti

-----Original Message-----
From: Chitti, Brian (EPPC DEP DOW)
Sent: Thursday, May 24, 2007 8:47 AM
To: 'David.Shehee@amwater.com'
Subject: RE: 2,4-D Owenton

Mr. Shehee,

I am working on a response.

Do you happen to have any mail correspondence for Northern Division, such as a request for reduced monitoring for 2,4-D or a letter from DOW saying the Northern Division is on an annual schedule for 2,4-D?

I am having trouble locating such letters. When did the Northern Division form from the previous Owenton and Tri-Valley?

If the Northern Division is currently on an annual schedule from the DOW, then we may be able to disregard the letter I sent on May 8, 2007. Systems can be on an annual schedule for SOCs and have detections and not have to go to quarterly monitoring.

I will need to look harder and see what I can find before I can give you a definite response to this issue.

Respectfully,

Brian Chitti

-----Original Message-----
From: David.Shehee@amwater.com [mailto:David.Shehee@amwater.com]
Sent: Wednesday, May 23, 2007 12:00 PM
To: Chitti, Brian (EPPC DEP DOW)

RE: 2,4-D Owenton

Chitti, Brian (EPPC DEP DOW) to: David.Shehee 05/24/2007 08:46 AM

History: This message has been replied to.

Mr. Shehee,

I am working on a response.

Do you happen to have any mail correspondence for Northern Division, such as a request for reduced monitoring for 2,4-D or a letter from DOW saying the Northern Division is on an annual schedule for 2,4-D?

I am having trouble locating such letters. When did the Northern Division form from the previous Owenton and Tri-Valley?

If the Northern Division is currently on an annual schedule from the DOW, then we may be able to disregard the letter I sent on May 8, 2007. Systems can be on an annual schedule for SOCs and have detections and not have to go to quarterly monitoring.

I will need to look harder and see what I can find before I can give you a definite response to this issue.

Respectfully,

Brian Chitti

-----Original Message-----
From: David.Shehee@amwater.com [mailto:David.Shehee@amwater.com]
Sent: Wednesday, May 23, 2007 12:00 PM
To: Chitti, Brian (EPPC DEP DOW)
Subject: Fw: 2,4-D Owenton

Brian,

I recently received the attached correspondence from you regarding a 2,4-D
detection July 12, 2006, in our Northern Division (KY0940430). I have attached an E-mail chain I had with Lora Gowins regarding a previous detect
for this constituent and associated annual sampling. I am also forwarding
another E-mail chain from Lora outlining an approach for detections of constituents below the MCL when you are already performing special monitoring for that constituent. Basically, you have to sample in the quarter of the highest detect and not perform quarterly monitoring for the
new detect. Because both detects were in the third quarter (original detection 08/04/04 of 0.0006 mg/L) we must continue to sample annually for
2007-2009 with no detections. Please let me know if I have misunderstood Lora and the regulations.

(See attached file: State 24D Letter for Northern 05070001.pdf)

Regards,

David B. Shehee
Water Quality Supervisor
Kentucky American Water
6300 Cedarcreek Lane
Lexington, Kentucky 40515
(859) 335-3660 office
(859) 335-3388 fax
david.shehee@amwater.com
----- Forwarded by David Shehee/KAWC/AWWSC on 05/23/2007 11:55 AM -----

	"Gowins, Lora (EPPC DEP DOW)" <lora.gowins@ky.gov>	
To		"'dshehee@kawc.com'" <dshehee@kawc.com>, "Gowins, Lora (EPPC DEP DOW)" <lora.gowins@ky.gov>
	11/29/2005 10:39 AM	
cc		"Roney, Julie (EPPC DEP DOW)" <Julie.Roney@ky.gov>, SCarr@kawc.com
Subject		RE: 2,4-D Owenton

David, if you have 4 consecutive quarters of 2,4-D monitoring, and all results are reliably and consistently below the MCL, then you may return to
reduced monitoring. (annual)

-----Original Message-----
From: dshehee@kawc.com [mailto:dshehee@kawc.com]

Sent: Tuesday, November 01, 2005 12:17 PM
To: lora.gowins@ky.gov
Cc: julie.roney@ky.gov; SCarr@kawc.com
Subject: 2,4-D Owenton

Lora,

We have completed 4 quarters of sampling for 2,4-D for Owenton Water Works
as of August 2005. We sent a letter in August requesting to go back to annual sampling in October. I know your staff is short, so I wanted some direction on what to do until we receive a letter from the State. Should we
proceed with quarterly sampling until we hear from your office?

I will take your response as direction for all special sampling.

Thanks for your help with this matter.

David Shehee
Water Quality Specialist
Kentucky American Water
6300 Cedarcreek Lane
Lexington, KY 40515
Phone (859) 335-3660
Fax (859) 263-3137
dshehee@kawc.com

RE: SOCs
Chitti, Brian \(EPPC DEP DOW\) to: David.Shehee 03/30/2007 01:17 PM

David,

I will start researching your historical data and send a response letter back to you soon. I will print your letter and put it in the files with my research and response.

Brian Chitti
Environmental Technologist II
Division of Water
Drinking Water Branch

-----Original Message-----
From: David.Shehee@amwater.com [mailto:David.Shehee@amwater.com]
Sent: Friday, March 30, 2007 12:43 PM
To: Chitti, Brian (EPPC DEP DOW)
Subject: SOCs

Brian,

We typically have sent these letters in hard copy, but I wasn't sure if they would be found because we now send the data in electronically. Please see the attached letter showing our completion of required monitoring for di(2-ethylhexyl)phthalate for our Northern Division (KY0940430). If you would prefer me to send in a hard copy of the letter, please let me know and I will.

(See attached file: Phthalate Owenton completion request 032607.doc)

Regards,
(Embedded image moved to file: pic19793.jpg)

Letter rescinding January 2006 TOC violation
Cleland, Mark \(EPPC DEP DENF\) to: dshehee 04/21/2006 11:20 AM

<<DENFNOV041006rescind_let.rtf>>

Hi David,

I received Lora's e-mail about the letter rescinding the 01/06 TOC violation for Kentucky American Northern Division. Attached is a copy of the letter that should be mailed today rescinding the violation. You should receive the original at the beginning or middle of next week.

Please contact me if you have any questions.

Sincerely,

Mark

Mark J. Cleland, M.P.A., R.E.H.S.
Environmental Enforcement Specialist III
Kentucky Department for Environmental Protection
Division of Enforcement

(502) 564-2150, ext. 174

DENFNOV041006rescind_let.rtf

RE: PN for Kentucky American Water Northern Division
Cleland, Mark \(EPPC DEP DENF\) to: dshehee 04/10/2006 03:35 PM

Hi David,

I received the PN information you faxed. I will forward a copy to Maxine Goebel to address the initial NOV and a copy to Stacee Hans for content review. Please contact me if you have any questions.

Sincerely,

Mark

Mark J. Cleland, M.P.A., R.E.H.S.
Environmental Enforcement Specialist III
Kentucky Department for Environmental Protection
Division of Enforcement
(502) 564-2150, ext. 174

-----Original Message-----
From: dshehee@kawc.com [mailto:dshehee@kawc.com]
Sent: Monday, April 10, 2006 2:58 PM
To: Cleland, Mark (EPPC DEP DENF)
Subject: RE: PN for Kentucky American Water Northern Division

Thanks Mark. You should receive something in the next few minutes.

David Shehee
Water Quality Supervisor
Kentucky American Water
6300 Cedarcreek Lane
Lexington, KY 40515
Phone (859) 335-3660
Fax (859) 335-3388
dshehee@kawc.com

"Cleland, Mark \(EPPC DEP DENF\)" <Mark.Cleland@ky.gov>

To: "Cleland, Mark \(EPPC DEP DENF\)" <Mark.Cleland@ky.gov>, <dshehee@kawc.com>
cc:
Subject: RE: PN for Kentucky American Water Northern Division

04/10/2006 02:09 PM

Hi David,

The FAX number is 502-564-9710. Sorry about the error in my previous

message.

Sincerely,

Mark

Mark J. Cleland, M.P.A., R.E.H.S.
Environmental Enforcement Specialist III
Kentucky Department for Environmental Protection
Division of Enforcement
(502) 564-2150, ext. 174

-----Original Message-----
From: Cleland, Mark (EPPC DEP DENF)
Sent: Monday, April 10, 2006 2:05 PM
To: 'dshehee@kawc.com'
Subject: RE: PN for Kentucky American Water Northern Division

Hi David,

That will be fine. You can also fax it to me at (502) 564-9701. Either way will work. I will e-mail you when I receive it.

Sincerely,

Mark

Mark J. Cleland, M.P.A., R.E.H.S.
Environmental Enforcement Specialist III
Kentucky Department for Environmental Protection
Division of Enforcement
(502) 564-2150, ext. 174

-----Original Message-----
From: dshehee@kawc.com [mailto:dshehee@kawc.com]
Sent: Monday, April 10, 2006 1:57 PM
To: Cleland, Mark (EPPC DEP DENF)
Cc: Goebel, Maxine (EPPC DEP DENF)
Subject: RE: PN for Kentucky American Water Northern Division

It is due to the State today. Can I E-mail the notification and Certification to you that I sent?

Thanks,

David Shehee
Water Quality Supervisor
Kentucky American Water
6300 Cedarcreek Lane
Lexington, KY 40515
Phone (859) 335-3660
Fax (859) 335-3388
dshehee@kawc.com

"Cleland, Mark

\(EPPC DEP DENF\)" <Maxine.Goebel@ky.gov>
<Mark.Cleland@ky.gov>

04/10/2006 01:54 PM

To: <dshehee@kawc.com>
cc: "Goebel, Maxine
Subject: RE: PN for Kentucky American Water Northern Division

Hi David,

Maxine is out sick today. Unfortunately, I will need to speak with Maxine before I can determine whether or not we have received it. I will get back to you on this as soon as I can.

Sincerely,

Mark

Mark J. Cleland, M.P.A., R.E.H.S.
Environmental Enforcement Specialist III
Kentucky Department for Environmental Protection
Division of Enforcement
(502) 564-2150, ext. 174

-----Original Message-----
From: dshehee@kawc.com [mailto:dshehee@kawc.com]
Sent: Monday, April 10, 2006 1:03 PM
To: Cleland, Mark (EPPC DEP DENF)
Subject: Fw: PN for Kentucky American Water Northern Division

Mark,

I haven't heard from Maxine on this and I wanted to forward it to you in case she is out. I just want to make sure your office has received our PN Certification.

Thanks,

David Shehee
Water Quality Supervisor
Kentucky American Water
6300 Cedarcreek Lane
Lexington, KY 40515
Phone (859) 335-3660
Fax (859) 335-3388
dshehee@kawc.com
----- Forwarded by David Shehee/KAWC/AWWSC on 04/10/2006 01:03 PM -----

David Shehee

To: maxine.goebel@ky.gov

04/10/2006 09:48 AM

cc:

Subject: PN for Kentucky American Water Northern Division

Maxine,

I called this morning, but just wanted to follow up with an E-mail to make sure you received our PN for the Glencoe area in our Northern Division. Please note that the PWSID number listed on the cover letter was incorrect as it was for the former Owenton Water. The correct PWSID number is listed on the PN Certification as 0940430.

Could you respond to this E-mail letting me know that you have received the Certification and that everything is in order?

Thanks,

David Shehee
Water Quality Supervisor
Kentucky American Water
6300 Cedarcreek Lane
Lexington, KY 40515
Phone (859) 335-3660
Fax (859) 335-3388
dshehee@kawc.com

RE: PN for Kentucky American Water Northern Division

Cleland, Mark \(EPPC DEP DENF\) to: Cleland, Mark \(EPPC DEP DENF\), dshehee 04/10/2006 02:10 PM

Hi David,

The FAX number is 502-564-9710. Sorry about the error in my previous message.

Sincerely,

Mark

Mark J. Cleland, M.P.A., R.E.H.S.
Environmental Enforcement Specialist III
Kentucky Department for Environmental Protection
Division of Enforcement
(502) 564-2150, ext. 174

-----Original Message-----
From: Cleland, Mark (EPPC DEP DENF)
Sent: Monday, April 10, 2006 2:05 PM
To: 'dshehee@kawc.com'
Subject: RE: PN for Kentucky American Water Northern Division

Hi David,

That will be fine. You can also fax it to me at (502) 564-9701. Either way will work. I will e-mail you when I receive it.

Sincerely,

Mark

Mark J. Cleland, M.P.A., R.E.H.S.
Environmental Enforcement Specialist III
Kentucky Department for Environmental Protection
Division of Enforcement
(502) 564-2150, ext. 174

-----Original Message-----
From: dshehee@kawc.com [mailto:dshehee@kawc.com]
Sent: Monday, April 10, 2006 1:57 PM
To: Cleland, Mark (EPPC DEP DENF)
Cc: Goebel, Maxine (EPPC DEP DENF)
Subject: RE: PN for Kentucky American Water Northern Division

It is due to the State today. Can I E-mail the notification and Certification to you that I sent?

Thanks,

David Shehee
Water Quality Supervisor
Kentucky American Water

6300 Cedarcreek Lane
Lexington, KY 40515
Phone (859) 335-3660
Fax (859) 335-3388
dshehee@kawc.com

"Cleland, Mark \(EPPC DEP DENF\)" <Mark.Cleland@ky.gov>

To: <dshehee@kawc.com>
cc: "Goebel, Maxine \(EPPC DEP DENF\)" <Maxine.Goebel@ky.gov>
Subject: RE: PN for Kentucky American Water Northern Division

04/10/2006 01:54 PM

Hi David,

Maxine is out sick today. Unfortunately, I will need to speak with Maxine before I can determine whether or not we have received it. I will get back to you on this as soon as I can.

Sincerely,

Mark

Mark J. Cleland, M.P.A., R.E.H.S.
Environmental Enforcement Specialist III
Kentucky Department for Environmental Protection
Division of Enforcement
(502) 564-2150, ext. 174

-----Original Message-----
From: dshehee@kawc.com [mailto:dshehee@kawc.com]
Sent: Monday, April 10, 2006 1:03 PM
To: Cleland, Mark (EPPC DEP DENF)
Subject: Fw: PN for Kentucky American Water Northern Division

Mark,

I haven't heard from Maxine on this and I wanted to forward it to you in case she is out. I just want to make sure your office has received our PN Certification.

Thanks,

David Shehee
Water Quality Supervisor
Kentucky American Water
6300 Cedarcreek Lane
Lexington, KY 40515
Phone (859) 335-3660

FW: Permit Applications for Kentucky American Water Northern Division

Hockensmith, Rita \(EPPC DEP DOW\) to: dshehee 04/13/2006 09:47 AM

Cc: hmiller, rbuchana, bridwell

History: This message has been forwarded.

Mr. Shehee,

I made a couple of corrections on the applications. I highlighted them in yellow. Also, Bill Caldwell, Supervisor for Water Quantity Section and Chris Yeary, permit writer, had a couple of suggestions, which are listed below.

- We would like to see intake elevations for each permit.
- Do not revise withdrawal rates at this time. (We can issue an interim authorization for increased withdrawals until it is more certain when your intake will be moved to the Kentucky River.)

If you need anything else, please let me know.

Thank you.

Rita Hockensmith
Division of Water
Watershed Management Branch
14 Reilly Road
Frankfort, KY 40601
502-564-3410
Rita.Hockensmith@ky.gov

-----Original Message-----
From: dshehee@kawc.com [mailto:dshehee@kawc.com]
Sent: Wednesday, April 12, 2006 3:58 PM
To: Hockensmith, Rita (EPPC DEP DOW)
Cc: hmiller@kawc.com; rbuchana@kawc.com; bridwell@kawc.com
Subject: Permit Applications for Kentucky American Water Northern Division

Rita,

Please review these permit applications and let us know if they satisfy your needs. As we discussed, we would like to use the maps and diagrams previously submitted.

Because we will need to get the signature of the mayor of Owenton, we may not be able to get the final copy out until Monday (Friday is a holiday for Kentucky American). We will wait to hear from you to include your comments prior to sending out.

(See attached file: Thomas Lake Permit Application.doc)(See attached file: Severn Creek Permit Application.doc)

Thank you for all of your help,

David Shehee
Water Quality Supervisor
Kentucky American Water
6300 Cedarcreek Lane

Lexington, KY 40515
Phone (859) 335-3660
Fax (859) 335-3388

dshehee@kawc.com

Thomas Lake Permit Application.doc

Severn Creek Permit Application.doc

RE: Owenton Plant Data
Julie.Roney to: dshehee 08/15/2005 08:49 AM

For August 8, the free chlorine residual in the settled water was "NA" and the residual at the BOF was very low. Any problems that day?

-----Original Message-----
From: dshehee@kawc.com [mailto:dshehee@kawc.com]
Sent: Friday, August 12, 2005 11:45 AM
To: julie.roney@ky.gov
Subject: Fw: Owenton Plant Data

David Shehee
Water Quality Specialist
Kentucky American Water
6300 Cedarcreek Lane
Lexington, KY 40515
Phone (859) 335-3660
Fax (859) 263-3137
dshehee@kawc.com
----- Forwarded by David Shehee/KAWC/AWWSC on 08/12/2005 11:46 AM -----

Dorothy Johnson

To: David Shehee/KAWC/AWWSC@AWW

08/11/2005 01:09 PM

cc:

Subject: Owenton Plant Data

(See attached file: Owenton Micro & related data through August 2005.xls)

RE: Dioxin Waiver Request
Lageman, Arianna (EEC) to: David.Shehee 12/17/2010 09:55 AM
Cc: "Roney, Julie (EEC)"

History: This message has been replied to and forwarded.

David,

Kentucky requires any public water system serving a population greater than 10,000 to sample for dioxin. This means that Plants A, B, and C (KY0340250) are all required to monitor for dioxin twice per three year period. The Owenton facility (KY0940430) is not located within one mile of a known dioxin source nor does it serve a population greater than 10,000 and therefore it is not required to test for dioxin. Once a plant receives a waiver for dioxin they will not have to test again unless the population changes or a known source of contamination is found to be influencing the source water.

Let me know if you have any questions.

Thank you,

Arianna Lageman

Compliance and Technical Assistance Branch
Division of Water
200 Fair Oaks Lane, 4th Floor
Frankfort, KY 40601
Phone: (502) 564-3410 Ext. 4818
Fax: (502) 564-2741
Drinking Water Watch Website: http://dep.gateway.ky.gov/DWW/

-----Original Message-----
From: David.Shehee@amwater.com [mailto:David.Shehee@amwater.com]
Sent: Wednesday, December 15, 2010 2:04 PM
To: Roney, Julie (EEC)
Subject: Dioxin Waiver Request

Julie,

Please see the attached request for a dioxin waiver for our Northern Division. Owenton had one when we purchased them.

Any reason we couldn't get a waiver for our Central Division as well? I don't expect we will see any dioxin at our facilities as it is unlikely that PCBs were burned in the KY River watershed. If you think we can get it approved, let me know and I will generate a letter.

Did you get a chance to correct the chemical name of the ferric/polymer blend for our Northern Division?

(See attached file: Dioxin Waiver Request 2010.pdf)

David

****

David B. Shehee
Supervisor, Water Quality and Environmental Compliance Kentucky American Water 2300 Richmond Road Lexington, Kentucky 40502
(859) 335-3660 Office
(859) 335-3388 Fax
david.shehee@amwater.com
www.kentuckyamwater.com

RE: Owenton
lora.gowins to: dshehee
Cc: Donna.Marlin
10/27/2005 03:20 PM

Yes, please continue to submit reports under Owenton's PWSID number.

-----Original Message-----
From: dshehee@kawc.com [mailto:dshehee@kawc.com]
Sent: Tuesday, October 25, 2005 3:42 PM
To: donna.marlin@ky.gov; lora.gowins@ky.gov
Subject: Owenton

Donna/Lora,

We have not received confirmation on the change of ownership for Owenton at this time. How would you like for us to proceed with compliance reports for October? I would assume we would report them under Owenton's old PWSID. Is that correct?

Thanks for your help,

David Shehee
Water Quality Specialist
Kentucky American Water
6300 Cedarcreek Lane
Lexington, KY 40515
Phone (859) 335-3660
Fax (859) 263-3137
dshehee@kawc.com

RE: Owenton
lora.gowins to: dshehee
Cc: Julie.Roney
10/14/2005 04:04 PM

Owenton was issued an NOV on 6/1/05 for failure to submit lead & copper results for 2004 and also for failure to submit VOCs for the 2002 - 2004 monitoring period. I see no other more recent violations for Owenton in SDWIS/State.

-----Original Message-----
From: dshehee@kawc.com [mailto:dshehee@kawc.com]
Sent: Friday, October 14, 2005 2:51 PM
To: lora.gowins@ky.gov
Subject: Fw: Owenton

Wasn't sure if you got this. Any news on this?

David Shehee
Water Quality Specialist
Kentucky American Water
6300 Cedarcreek Lane
Lexington, KY 40515
Phone (859) 335-3660
Fax (859) 263-3137
dshehee@kawc.com
----- Forwarded by David Shehee/KAWC/AWWSC on 10/14/2005 02:52 PM -----

David Shehee
10/11/2005 12:16 PM

To: julie.roney@ky.gov, laura.gowins@ky.gov
cc: donna.marlin@ky.gov
Subject: Owenton

Julie/Laura,

I wanted to check the status on any violations Owenton Water Works will be issued, but have not received to date. It is my intention to keep their current PWSID number until those violations have been received.

Thanks,

David Shehee
Water Quality Specialist
Kentucky American Water
6300 Cedarcreek Lane
Lexington, KY 40515
Phone (859) 335-3660
Fax (859) 263-3137
dshehee@kawc.com

Re: TOCs
Patrick Vowell to: David Shehee 01/03/2008 04:48 PM
This message is digitally signed.

History: This message has been forwarded.

David,

Off the top of my head, I don't think we have any situations like that. Let me check into things a little more, and get back to you with a definitive answer.

Thank you,
Patrick Vowell
Chemistry Manager
American Water
1115 South Illinois Street
Belleville, IL 62220
Office (618) 239-0521
Cell (618) 435-7875
Fax (618)235-6349

********** Internet E-mail Confidentiality Disclaimer **********

This e-mail message may contain privileged or confidential information. If you are not the intended recipient, you may not disclose, use, disseminate, distribute, copy or rely upon this message or attachment in any way. If you received this e-mail message in error, please return by forwarding the message and its attachments to the sender.

American Water, its subsidiaries and affiliates, does not accept liability for any errors, omissions, corruption or virus in the contents of this message or any attachments that arise as a result of e-mail transmission.
David Shehee/KAWC/AWWSC

David Shehee/KAWC/AWWSC
01/03/2008 15:27

To Patrick Vowell/BELLAB/AWWSC@AWW
cc
Subject TOCs

Patrick,

We are going to be sending our TOCs for our Central and Northern Divisions to Belleville for compliance in 2008. One problem that we have always been concerned about is that we have two different sources in each Division and there can be a blend of each source as well. We have always handled this by running both sources and calculating the percentage of each for the TOC, alkalinity, etc. for compliance. I am wondering how you currently handle this situation for existing facilities that have this same issue.

Thanks,

David B. Shehee
Water Quality Supervisor
Kentucky American Water

FW: New TOC Site of our Northern Division

Pike, Jerry \(EPPC DEP DOW\) to: dshehee, djohnson 01/10/2007 09:35 AM

Oops I left you guys off...

-----Original Message-----
From: Pike, Jerry (EPPC DEP DOW)
Sent: Wednesday, January 10, 2007 9:33 AM
To: Chitti, Brian (EPPC DEP DOW)
Cc: Hall, Frank (EPPC DEP DOW)
Subject: FW: New TOC Site of our Northern Division

Forwarding....

-----Original Message-----
From: dshehee@kawc.com [mailto:dshehee@kawc.com]
Sent: Wednesday, January 10, 2007 9:30 AM
To: Pike, Jerry (EPPC DEP DOW)
Cc: djohnson@kawc.com
Subject: New TOC Site of our Northern Division

Jerry,

I need to have a third raw water TOC site added to our Sample Site Database
for our Northern Division. This new site is necessary in the event that we
blend Thomas Lake and Severn Creek water coming into the plant. Can you add
this site to our plan for me?

(See attached file: TOC-NEW SITE-01102007.xls)

Thanks,

David Shehee
Water Quality Supervisor
Kentucky American Water
6300 Cedarcreek Lane
Lexington, KY 40515
Phone (859) 335-3660
Fax (859) 335-3388
dshehee@kawc.com

TOC-NEW SITE-01102007.xls

RE: Change Forms
Ritter, Todd (EPPC DEP DOW) to: 'dshehee@kawc.com' 01/20/2006 01:25 PM

David,

All of Owenton's plant information, etc. has been moved to KY American Northern Div. (0940430). Is the system still purchasing any water from other systems?
Owenton is no longer a system so all results sent in should be for 0940430 henceforth. I am getting ready to add the sampling sites. Sorry for the time delay but it's been very busy.

Thanks,
Todd

-----Original Message-----
From: dshehee@kawc.com [mailto:dshehee@kawc.com]
Sent: Friday, December 16, 2005 3:01 PM
To: Ritter, Todd (EPPC DEP DOW)
Subject: Change Forms

Todd,

All of the lead and copper sites being changed are Tier 3C. I put that on the attached forms.

(See attached file: TOC-NEW SITES-102005.xls)(See attached file: BACTE-NEW SITES-102005.xls)(See attached file: LCR-NEW SITES-102005.xls)

David Shehee
Water Quality Supervisor
Kentucky American Water
6300 Cedarcreek Lane
Lexington, KY 40515
Phone (859) 335-3660
Fax (859) 263-3137
dshehee@kawc.com

Rpt_Select PWS for Sampling Points

Ritter, Todd (EPPC DEP DOW) to: 'dshehee@kawc.com' 09/16/2005 01:28 PM

Rpt_Select PWS for Sampling Points.rtf

RE: KAWC/Northern Division
Roney, Julie (EEC) to: David.Shehee 12/02/2010 04:05 PM
History: This message has been replied to.

Thanks!!

-----Original Message-----
From: David.Shehee@amwater.com [mailto:David.Shehee@amwater.com]
Sent: Thursday, December 02, 2010 4:00 PM
To: Roney, Julie (EEC)
Subject: Re: KAWC/Northern Division

Julie,

The attached letter was mailed to Noah Taylor and Jeff Malsi on September 29. Not sure why it isn't in your system.

(See attached file: Sanitary Survey Response 2010.pdf)

David

****
David B. Shehee
Supervisor, Water Quality and Environmental Compliance Kentucky American Water
2300 Richmond Road Lexington, Kentucky 40502
(859) 335-3660 Office
(859) 335-3388 Fax
david.shehee@amwater.com
www.kentuckyamwater.com

"Roney, Julie (EEC)" <Julie.Roney@ky.gov> 12/02/2010 03:21 PM

To <dshehee@kawc.com>
cc
Subject KAWC/Northern Division

(Embedded image moved to file: pic20362.gif) Hey, you're late in getting DOW a response to the non-significant deficiencies found during the Northern Division's sanitary survey. The survey was conducted on June 29 and July 9-11, letter mailed ~August 12 and the 90 day deadline for the response was November 10.

Julie W. Roney
Drinking Water Coordinator
KY Division of Water
502/564-3410

KAWC/Northern Division
Roney, Julie (EEC) to: dshehee 12/02/2010 03:21 PM

History: This message has been replied to.

Hey, you're late in getting DOW a response to the non-significant deficiencies found during the Northern Division's sanitary survey. The survey was conducted on June 29 and July 9-11, letter mailed ~August 12 and the 90 day deadline for the response was November 10.

Julie W. Roney
Drinking Water Coordinator
KY Division of Water
502/564-3410

RE: Jar test report
Roney, Julie (EEC) to: David.Shehee 11/24/2010 07:36 AM
History: This message has been replied to.

OK, I'll get an approval letter out today.

-----Original Message-----
From: David.Shehee@amwater.com [mailto:David.Shehee@amwater.com]
Sent: Tuesday, November 23, 2010 1:13 PM
To: Roney, Julie (EEC)
Subject: RE: Jar test report

I am sorry Julie. It is the 1100.

David

****
David B. Shehee
Supervisor, Water Quality and Environmental Compliance
Kentucky American Water
2300 Richmond Road
Lexington, Kentucky 40502
(859) 335-3660 Office
(859) 335-3388 Fax
david.shehee@amwater.com
www.kentuckyamwater.com

	"Roney, Julie (EEC)" <Julie.Roney@ky.gov>	
To		<David.Shehee@amwater.com>
cc		
	11/23/2010 10:43 AM	
Subject		RE: Jar test report

David, which of the Ferri+Plus 1000 Series' products are you proposing to use? As you can see below, the 1000 Series are NSF-certified to different maximum dosages.

Ferri+Plus 1005	Coagulation & Flocculation	251mg/L
Ferri+Plus 1010	Coagulation & Flocculation	253mg/L
Ferri+Plus 1020	Coagulation & Flocculation	255mg/L
Ferri+Plus 1050	Coagulation & Flocculation	263mg/L
Ferri+Plus 1075	Coagulation & Flocculation	267mg/L
Ferri+Plus 1100	Coagulation & Flocculation	200mg/L
Ferri+Plus 1125	Coagulation & Flocculation	160mg/L
Ferri+Plus 1150	Coagulation & Flocculation	133mg/L
Ferri+Plus 1200	Coagulation & Flocculation	100mg/L
Ferri+Plus 1300	Coagulation & Flocculation	67mg/L
Ferri+Plus 1400	Coagulation & Flocculation	50mg/L

-----Original Message-----
From: David.Shehee@amwater.com [mailto:David.Shehee@amwater.com]
Sent: Monday, November 22, 2010 6:04 PM
To: Roney, Julie (EEC)
Subject: Fw: Jar test report

Julie,

We would like to perform a plant trial of PVS Chemicals' ferric chloride/polymer blend at our Northern Division plant. If all goes well, we would switch to this chemical in 2011 in our ND plant.

Let me know if you have any concerns.

Thanks,

David

****
David B. Shehee
Supervisor, Water Quality and Environmental Compliance Kentucky American Water 2300 Richmond Road Lexington, Kentucky 40502
(859) 335-3660 Office
(859) 335-3388 Fax
david.shehee@amwater.com
www.kentuckyamwater.com
----- Forwarded by David Shehee/KAWC/AWWSC on 11/22/2010 06:02 PM -----

"Bennett, Jim"

<jbennett@pvschem

icals.com>

To

"David.Shehee@amwater.com"

	11/18/2010 04:11 PM	<David.Shehee@amwater.com>
cc		"Gonzalez, Jose (Internet)" <tl1000jcky@aol.com>
Subject		FW: Jar test report

David,

The MSDS and spec sheet are attached.

Jim

From: Jose M. Gonzalez [mailto:tl1000jcky@aol.com]
Sent: Thursday, November 18, 2010 2:46 PM
To: Bennett, Jim
Subject: Re: Jar test report

I don't think so but here it is along with the spec sheet.

Jose M. Gonzalez
Director, Technical Service
PVS Technologies
Phone: 607-859-2543
Cell: 313-510-6238
Fax: 607-859-2543

-----Original Message-----
From: Bennett, Jim <jbennett@pvschemicals.com>
To: Gonzalez, Jose (Internet) (Internet) <tl1000jcky@aol.com>
Sent: Thu, Nov 18, 2010 2:32 pm
Subject: FW: Jar test report

Is the Ferri Plus MSDS available on the PVS website?

From: David.Shehee@amwater.com [mailto:David.Shehee@amwater.com]
Sent: Thursday, November 18, 2010 9:43 AM

To: Bennett, Jim
Subject: Re: Jar test report

Please send me a copy of the MSDS for this product.

Thanks.

> From: "Bennett, Jim" [jbennett@pvschemicals.com]
> Sent: 11/17/2010 05:32 PM EST
> To: David Shehee
> Cc: "Gonzalez, Jose (Internet)" <tl1000jcky@aol.com>
> Subject: Jar test report

David,

Here is Jose's report. Please call or email if you have questions or would like to schedule a plant trial.

Best regards,

Jim
(See attached file: Ferri+Plus1000SeriesMSDS.pdf)(See attached file: Ferri
+Plus1000SeriesSpecs.pdf)

RE: Polymer Trial

Roney, Julie (EEC) to: David.Shehee 06/23/2009 08:40 AM

History: This message has been replied to.

Go ahead. I'll get a letter out today. It's NSF-approved to a max dosage of 3 mg/L.

-----Original Message-----
From: David.Shehee@amwater.com [mailto:David.Shehee@amwater.com]
Sent: Monday, June 22, 2009 4:46 PM
To: Roney, Julie (EEC)
Subject: Polymer Trial

Julie,

I would like to do a plant trial with Cedarchem's CedarFloc 551 anionic polymer. Attached is the MSDS sheet. It is an NSF approved emulsion polymer. If successful, we would likely change to this in a month or so.

(See attached file: CEDARFLOC 551 MSDS.doc)

Please let me know if you have any concerns.

David

****
David B. Shehee
Supervisor, Water Quality and Environmental Compliance
Kentucky American Water
2300 Richmond Road
Lexington, Kentucky 40502
(859) 335-3660 Office
(859) 335-3388 Fax
david.shehee@amwater.com
www.kentuckyamwater.com

RE: HPC Data for Owenton

Roney, Julie (EEC) to: David.Shehee
Cc: "DeKoster, Don (EEC)"

06/30/2008 07:51 AM

Start sending it to Don DeKoster at Don.DeKoster@ky.gov. Northern Division is officially his system.

-----Original Message-----
From: David.Shehee@amwater.com [mailto:David.Shehee@amwater.com]
Sent: Friday, June 27, 2008 9:07 AM
To: Roney, Julie (EEC)
Subject: HPC Data for Owenton

Julie,

Will I continue sending this to you in the future or is there someone else
who will be looking at this going forward?

(See attached file: Owenton Micro & related data-updated.xls)

Thanks,

David

****
David B. Shehee
Water Quality Supervisor
Kentucky American Water
6300 Cedarcreek Lane
Lexington, Kentucky 40515
(859) 335-3660 office
(859) 335-3388 fax
david.shehee@amwater.com
www.kawc.com
www.bluegrasswater.com

RE: Catfloc

Roney, Julie (EPPC DEP DOW) to: David.Shehee 11/28/2007 08:15 AM

Here's the letter dated 11/19 for the Nalco Catfloc LS product.

Julie W. Roney, Supervisor
Technical Assistance and Outreach
Drinking Water Branch
Division of Water
502/564-3410, extension 535
502/564-9899 (fax)
-----Original Message-----
From: David.Shehee@amwater.com [mailto:David.Shehee@amwater.com]
Sent: Tuesday, November 27, 2007 12:43 PM
To: Roney, Julie (EPPC DEP DOW)
Subject: Catfloc

Hey Julie,

I hope you had a great Thanksgiving. I wanted to let you know that the new
letter you sent regarding the Catfloc still said TL. I just crossed out the
TL and wrote LS, so you don't need to send out a new letter if you don't
want to.

Cordially Yours,

David B. Shehee
Water Quality Supervisor
Kentucky American Water
6300 Cedarcreek Lane
Lexington, Kentucky 40515
(859) 335-3660 office
(859) 335-3388 fax
david.shehee@amwater.com
www.kawc.com
www.bluegrasswater.com

KAWCNDNalcoLSNov07.doc

RE: Catfloc
Roney, Julie (EPPC DEP DOW) to: David.Shehee 11/19/2007 11:42 AM
History: This message has been replied to.

I'll revise the letter.

Julie W. Roney, Supervisor
Technical Assistance and Outreach
Drinking Water Branch
Division of Water
502/564-3410, extension 535
502/564-9899 (fax)
-----Original Message-----
From: David.Shehee@amwater.com [mailto:David.Shehee@amwater.com]
Sent: Monday, November 19, 2007 10:24 AM
To: Roney, Julie (EPPC DEP DOW)
Subject: Catfloc

Julie,

I told you the wrong Catfloc for Northern Division. It isn't Catfloc TL, it
is Catfloc LS. I don't think it is a big deal, but wanted to let you know.

Thanks,

David B. Shehee
Water Quality Supervisor
Kentucky American Water
6300 Cedarcreek Lane
Lexington, Kentucky 40515
(859) 335-3660 office
(859) 335-3388 fax
david.shehee@amwater.com
www.kawc.com
www.bluegrasswater.com

RE: Catfloc TL

Roney, Julie (EPPC DEP DOW) to: David.Shehee 11/09/2007 02:50 PM

Go ahead and start the trial. I'll get a letter out as soon as I can.

Julie W. Roney, Supervisor
Technical Assistance and Outreach
Drinking Water Branch
Division of Water
502/564-3410, extension 535
502/564-9899 (fax)

-----Original Message-----
From: David.Shehee@amwater.com [mailto:David.Shehee@amwater.com]
Sent: Friday, November 09, 2007 2:32 PM
To: Roney, Julie (EPPC DEP DOW)
Subject: Catfloc TL

Hey Julie,

I got your voice message. Thanks for the information about the model and the Catfloc.

I want to try the Catfloc TL in an attempt to get our filters to come back
in better up there. We would only be dosing a small amount to the filter backwash water at this time.

Thanks,

David B. Shehee
Water Quality Supervisor
Kentucky American Water
6300 Cedarcreek Lane
Lexington, Kentucky 40515
(859) 335-3660 office
(859) 335-3388 fax
david.shehee@amwater.com
www.kawc.com
www.bluegrasswater.com

RE: Sulfuric Acid
Roney, Julie (EPPC DEP DOW) to: 'dshehee@kawc.com' 01/20/2006 09:24 AM

They don't have 50% on the NSF web site. If they can provide documentation that the 50% is NSF approved, I can accept that.

-----Original Message-----
From: dshehee@kawc.com [mailto:dshehee@kawc.com]
Sent: Friday, January 20, 2006 9:14 AM
To: Julie.Roney@ky.gov
Subject: RE: Sulfuric Acid

Julie,

I talked with them yesterday and they told me that had 50% sulfuric. Contact information is as follows. I will follow up with them today to make sure I didn't make a mistake.

Georgetown, Kentucky
110 Carley Drive
Georgetown, KY 40324
(502) 863-2874
(800) 876-2874
Fax: (502) 863-2903
E-Mail: mid-south.georgetown@brenntag.com

Back to Map

David Shehee
Water Quality Supervisor
Kentucky American Water
6300 Cedarcreek Lane
Lexington, KY 40515
Phone (859) 335-3660
Fax (859) 335-3388
dshehee@kawc.com

"Roney, Julie (EPPC DEP DOW)" <Julie.Roney@ky.gov>
01/20/2006 09:09

To: "'dshehee@kawc.com'" <dshehee@kawc.com>
cc:
Subject: RE: Sulfuric Acid

AM

Brenntag only carries 38.5% and 93% sulfuric.

-----Original Message-----
From: dshehee@kawc.com [mailto:dshehee@kawc.com]
Sent: Thursday, January 19, 2006 5:16 PM
To: Julie.Roney@ky.gov
Subject: RE: Sulfuric Acid

Julie,

Looks like it will be Brenntag Mid South 50% NSF approved Sulfuric Acid. To make sure we take care of any manganese, I would also like to move the point of caustic addition to prior to the filters with your permission.

Thanks Julie,

David Shehee
Water Quality Supervisor
Kentucky American Water
6300 Cedarcreek Lane
Lexington, KY 40515
Phone (859) 335-3660
Fax (859) 335-3388
dshehee@kawc.com

"Roney, Julie (EPPC DEP DOW)" <Julie.Roney@ky.gov>

To: "'dshehee@kawc.com'" <dshehee@kawc.com>

cc:

Subject: RE: Sulfuric Acid

01/11/2006 02:04 PM

That would do.

Also, DWB is doing the 2 EPA webcasts on 1/17 (Overview of the Stage 2 and LT2 Rules) and 1/26 (Implementing Stage 2 and LT2) here in Frankfort. I have room for about 30 people and am offering this to some of the surrounding water systems, especially those that will go in Schedules 1 and 2. Let me know if you and any others would be interested in attending. They are free and I can try to get CEUs for them.

-----Original Message-----
From: dshehee@kawc.com [mailto:dshehee@kawc.com]
Sent: Wednesday, January 11, 2006 1:31 PM
To: Julie.Roney@ky.gov
Subject: RE: Sulfuric Acid

I am assuming on the sulfuric acid, an E-mail with the vendor and the strength (50%) would suffice?

David Shehee
Water Quality Supervisor
Kentucky American Water
6300 Cedarcreek Lane
Lexington, KY 40515
Phone (859) 335-3660
Fax (859) 335-3388
dshehee@kawc.com

"Roney, Julie (EPPC DEP DOW)" <Julie.Roney@ky.gov>

01/11/2006 01:27 PM

To: "'dshehee@kawc.com'" <dshehee@kawc.com>
cc: "DeKoster, Don (EPPC DEP DOW)" <Don.DeKoster@ky.gov>
Subject: RE: Sulfuric Acid

On Owenton, are you requesting to look at each clearwell independent of each
other? According to our C-T form, there are 3 zones: the clarifier, the filters and the combined clearwells. Zone 1 doesn't apply unless you are feeding pre-chlorine. Zone 2 is for the top-of-filter chlorine application and Zone 3 for the pre-clearwell feed point. Right now Owenton, if not feeding pre-chlorine, should be taking a bottom of filter for Zone 2 and a plant tap for Zone 3. If you can sample after the basement clearwell and would want to look at each clearwell independent of each other, we can revise the C-T form to reflect that.

On a totally unrelated issue, who is over the Distribution System now? Fred
White? and who is over the Company as a whole? is Nick still there or would I contact someone else (this is AWWA related).

-----Original Message-----
From: dshehee@kawc.com [mailto:dshehee@kawc.com]
Sent: Tuesday, January 10, 2006 3:40 PM
To: julie.roney@ky.gov
Subject: Sulfuric Acid

Julie,

I have done extensive jar testing and I would like to do a plant trial with sulfuric acid in Owenton to see if we can depress the pH to a lower level for better TOC removal. If successful, it is likely that we would move our point of caustic addition to after the clarifier, but prior to the filters to improve manganese removal.

One other thing. I was looking at their CT calculations and they are writing down the chlorine at the bottom of the filters (per your guidance). The only trouble with this is that we add very little chlorine on top of the filter, but add our main volume of chlorine in the main after the flow from the two filters comes together, but prior to the clearwell. Therefore, we are losing quite a bit of CT value in our basement clearwell. I would like your permission to have them check the chlorine in the basement clearwell (as close to application as feasible) and write down that value for the CT calculation.

I am happy to discuss. Thanks for your help Julie.

David Shehee
Water Quality Supervisor
Kentucky American Water
6300 Cedarcreek Lane
Lexington, KY 40515
Phone (859) 335-3660
Fax (859) 335-3388
dshehee@kawc.com

RE: Sulfuric Acid
Roney, Julie (EPPC DEP DOW) to: 'dshehee@kawc.com' 01/20/2006 09:09 AM

Brenntag only carries 38.5% and 93% sulfuric.

-----Original Message-----
From: dshehee@kawc.com [mailto:dshehee@kawc.com]
Sent: Thursday, January 19, 2006 5:16 PM
To: Julie.Roney@ky.gov
Subject: RE: Sulfuric Acid

Julie,

Looks like it will be Brenntag Mid South 50% NSF approved Sulfuric Acid. To make sure we take care of any manganese, I would also like to move the point of caustic addition to prior to the filters with your permission.

Thanks Julie,

David Shehee
Water Quality Supervisor
Kentucky American Water
6300 Cedarcreek Lane
Lexington, KY 40515
Phone (859) 335-3660
Fax (859) 335-3388
dshehee@kawc.com

"Roney, Julie (EPPC DEP DOW)" <Julie.Roney@ky.gov>
To: "'dshehee@kawc.com'" <dshehee@kawc.com>
cc:
Subject: RE: Sulfuric Acid
01/11/2006 02:04 PM

That would do.

Also, DWB is doing the 2 EPA webcasts on 1/17 (Overview of the Stage 2 and LT2 Rules) and 1/26 (Implementing Stage 2 and LT2) here in Frankfort. I have room for about 30 people and am offering this to some of the

surrounding water systems, especially those that will go in Schedules 1 and 2. Let me know if you and any others would be interested in attending. They are free and I can try to get CEUs for them.

-----Original Message-----
From: dshehee@kawc.com [mailto:dshehee@kawc.com]
Sent: Wednesday, January 11, 2006 1:31 PM
To: Julie.Roney@ky.gov
Subject: RE: Sulfuric Acid

I am assuming on the sulfuric acid, an E-mail with the vendor and the strength (50%) would suffice?

David Shehee
Water Quality Supervisor
Kentucky American Water
6300 Cedarcreek Lane
Lexington, KY 40515
Phone (859) 335-3660
Fax (859) 335-3388
dshehee@kawc.com

"Roney, Julie (EPPC DEP DOW)" <Julie.Roney@ky.gov>

To: "'dshehee@kawc.com'" <dshehee@kawc.com>
cc: "DeKoster, Don (EPPC DEP DOW)" <Don.DeKoster@ky.gov>
Subject: RE: Sulfuric Acid

01/11/2006 01:27 PM

On Owenton, are you requesting to look at each clearwell independent of each other? According to our C-T form, there are 3 zones: the clarifier, the filters and the combined clearwells. Zone 1 doesn't apply unless you are feeding pre-chlorine. Zone 2 is for the top-of-filter chlorine application and Zone 3 for the pre-clearwell feed point. Right now Owenton, if not feeding pre-chlorine, should be taking a bottom of filter for Zone 2 and a plant tap for Zone 3. If you can sample after the basement clearwell and would want to look at each clearwell independent of each other, we can revise the C-T form to reflect that.

On a totally unrelated issue, who is over the Distribution System now? Fred White? and who is over the Company as a whole? is Nick still there or

would I contact someone else (this is AWWA related).

-----Original Message-----
From: dshehee@kawc.com [mailto:dshehee@kawc.com]
Sent: Tuesday, January 10, 2006 3:40 PM
To: julie.roney@ky.gov
Subject: Sulfuric Acid

Julie,

I have done extensive jar testing and I would like to do a plant trial with sulfuric acid in Owenton to see if we can depress the pH to a lower level for better TOC removal. If successful, it is likely that we would move our point of caustic addition to after the clarifier, but prior to the filters to improve manganese removal.

One other thing. I was looking at their CT calculations and they are writing down the chlorine at the bottom of the filters (per your guidance). The only trouble with this is that we add very little chlorine on top of the filter, but add our main volume of chlorine in the main after the flow from the two filters comes together, but prior to the clearwell. Therefore, we are losing quite a bit of CT value in our basement clearwell. I would like your permission to have them check the chlorine in the basement clearwell (as close to application as feasible) and write down that value for the CT calculation.

I am happy to discuss. Thanks for your help Julie.

David Shehee
Water Quality Supervisor
Kentucky American Water
6300 Cedarcreek Lane
Lexington, KY 40515
Phone (859) 335-3660
Fax (859) 335-3388
dshehee@kawc.com

RE: Grandfathering Crypto Data
Roney, Julie (EPPC DEP DOW) to: 'dshehee@kawc.com' 01/19/2006 08:47 AM

I talked to Lora and we'll look into what was submitted in 2000.

-----Original Message-----
From: dshehee@kawc.com [mailto:dshehee@kawc.com]
Sent: Thursday, January 19, 2006 8:34 AM
To: Julie.Roney@ky.gov
Subject: RE: Grandfathering Crypto Data

Julie,

Those populations should have been corrected in SDWIS. Jan did a census in 2000 with all systems combined and the population was 8,181. I have attached a letter that I sent to the State to get the population corrected to 8181, although I believe Jan had sent in these requests previously as well. I believe the numbers you are using are using the standard multiplier. The census was approved by the State as the official population for the combined systems.

(See attached file: Owenton Closing letter to DOW.doc)

Thanks again for your help on this.

David Shehee
Water Quality Supervisor
Kentucky American Water
6300 Cedarcreek Lane
Lexington, KY 40515
Phone (859) 335-3660
Fax (859) 335-3388
dshehee@kawc.com

"Roney, Julie (EPPC DEP DOW)" <Julie.Roney@ky.gov>
To: "'dshehee@kawc.com'" <dshehee@kawc.com>
cc:
Subject: RE: Grandfathering Crypto Data
01/19/2006 08:23 AM

Once the 2 systems are combined their population, according to our database,
becomes over 10,000 and thus they fall into Schedule 3 (Owenton = 4084 and Tri-Village = 8001 to equal 12085)

-----Original Message-----
From: dshehee@kawc.com [mailto:dshehee@kawc.com]
Sent: Wednesday, January 18, 2006 1:18 PM
To: Julie.Roney@ky.gov
Subject: RE: Grandfathering Crypto Data

That will be fine. I believe Belleville is heading all of this up.

On Owenton/TriVillage, will they be Schedule 4 when combined into one PWSID? They still will be under 10K.

David Shehee
Water Quality Supervisor
Kentucky American Water
6300 Cedarcreek Lane
Lexington, KY 40515
Phone (859) 335-3660
Fax (859) 335-3388
dshehee@kawc.com

"Roney, Julie (EPPC DEP DOW)" <Julie.Roney@ky.gov> 01/18/2006 10:41 AM

To: "'dshehee@kawc.com'" <dshehee@kawc.com>
cc:
Subject: RE: Grandfathering Crypto Data

I may try to get with all the larger water systems that may try to grandfather and make sure the data, etc will be accepted.

Owenton/TriVillage are on schedule 4.

-----Original Message-----
From: dshehee@kawc.com [mailto:dshehee@kawc.com]
Sent: Wednesday, January 18, 2006 10:29 AM
To: Julie.Roney@ky.gov
Subject: Re: Grandfathering Crypto Data

Yes. We have already performed our 2 years of raw water monitoring through Belleville.

By the way, can you give me the time frame for compliance for our Northern Division (i.e., Owenton/TriVillage)?

Thanks,

David Shehee
Water Quality Supervisor
Kentucky American Water
6300 Cedarcreek Lane
Lexington, KY 40515
Phone (859) 335-3660
Fax (859) 335-3388
dshehee@kawc.com

"Roney, Julie (EPPC DEP DOW)" <Julie.Roney@ky.gov>

To: "'dshehee@kawc.com'" <dshehee@kawc.com>

cc:

Subject: Grandfathering Crypto Data

01/18/2006 10:03 AM

Will KAWC be grandfathering any Crypto data?

Julie W. Roney, Supervisor
Technical Assistance and Outreach
Drinking Water Branch
Division of Water
14 Reilly Road
Frankfort, KY 40601
502/564-3410, ext. 535

RE: Grandfathering Crypto Data
Roney, Julie (EPPC DEP DOW) to: 'dshehee@kawc.com' 01/19/2006 08:22 AM

Once the 2 systems are combined their population, according to our database, becomes over 10,000 and thus they fall into Schedule 3 (Owenton = 4084 and Tri-Village = 8001 to equal 12085)

-----Original Message-----
From: dshehee@kawc.com [mailto:dshehee@kawc.com]
Sent: Wednesday, January 18, 2006 1:18 PM
To: Julie.Roney@ky.gov
Subject: RE: Grandfathering Crypto Data

That will be fine. I believe Belleville is heading all of this up.

On Owenton/TriVillage, will they be Schedule 4 when combined into one PWSID? They still will be under 10K.

David Shehee
Water Quality Supervisor
Kentucky American Water
6300 Cedarcreek Lane
Lexington, KY 40515
Phone (859) 335-3660
Fax (859) 335-3388
dshehee@kawc.com

"Roney, Julie (EPPC DEP DOW)" <Julie.Roney@ky.gov>
01/18/2006 10:41 AM

To: "'dshehee@kawc.com'" <dshehee@kawc.com>
cc:
Subject: RE: Grandfathering Crypto Data

I may try to get with all the larger water systems that may try to grandfather and make sure the data, etc will be accepted.

Owenton/TriVillage are on schedule 4.

-----Original Message-----

From: dshehee@kawc.com [mailto:dshehee@kawc.com]
Sent: Wednesday, January 18, 2006 10:29 AM
To: Julie.Roney@ky.gov
Subject: Re: Grandfathering Crypto Data

Yes. We have already performed our 2 years of raw water monitoring through Belleville.

By the way, can you give me the time frame for compliance for our Northern Division (i.e., Owenton/TriVillage)?

Thanks,

David Shehee
Water Quality Supervisor
Kentucky American Water
6300 Cedarcreek Lane
Lexington, KY 40515
Phone (859) 335-3660
Fax (859) 335-3388
dshehee@kawc.com

"Roney, Julie (EPPC DEP DOW)" <Julie.Roney@ky.gov> 01/18/2006 10:03 AM

To: "'dshehee@kawc.com'" <dshehee@kawc.com>
cc:
Subject: Grandfathering Crypto Data

Will KAWC be grandfathering any Crypto data?

Julie W. Roney, Supervisor
Technical Assistance and Outreach
Drinking Water Branch
Division of Water
14 Reilly Road
Frankfort, KY 40601
502/564-3410, ext. 535

RE: Sulfuric Acid
Roney, Julie (EPPC DEP DOW) to: 'dshehee@kawc.com' 01/11/2006 02:02 PM

That would do.

Also, DWB is doing the 2 EPA webcasts on 1/17 (Overview of the Stage 2 and LT2 Rules) and 1/26 (Implementing Stage 2 and LT2) here in Frankfort. I have room for about 30 people and am offering this to some of the surrounding water systems, especially those that will go in Schedules 1 and 2. Let me know if you and any others would be interested in attending. They are free and I can try to get CEUs for them.

-----Original Message-----
From: dshehee@kawc.com [mailto:dshehee@kawc.com]
Sent: Wednesday, January 11, 2006 1:31 PM
To: Julie.Roney@ky.gov
Subject: RE: Sulfuric Acid

I am assuming on the sulfuric acid, an E-mail with the vendor and the strength (50%) would suffice?

David Shehee
Water Quality Supervisor
Kentucky American Water
6300 Cedarcreek Lane
Lexington, KY 40515
Phone (859) 335-3660
Fax (859) 335-3388
dshehee@kawc.com

"Roney, Julie (EPPC DEP DOW)" <Julie.Roney@ky.gov>
01/11/2006 01:27 PM

To: "'dshehee@kawc.com'" <dshehee@kawc.com>
cc: "DeKoster, Don (EPPC DEP DOW)" <Don.DeKoster@ky.gov>
Subject: RE: Sulfuric Acid

On Owenton, are you requesting to look at each clearwell independent of each
other? According to our C-T form, there are 3 zones: the clarifier, the

filters and the combined clearwells. Zone 1 doesn't apply unless you are feeding pre-chlorine. Zone 2 is for the top-of-filter chlorine application and Zone 3 for the pre-clearwell feed point. Right now Owenton, if not feeding pre-chlorine, should be taking a bottom of filter for Zone 2 and a plant tap for Zone 3. If you can sample after the basement clearwell and would want to look at each clearwell independent of each other, we can revise the C-T form to reflect that.

On a totally unrelated issue, who is over the Distribution System now? Fred
White? and who is over the Company as a whole? is Nick still there or would I contact someone else (this is AWWA related).

-----Original Message-----
From: dshehee@kawc.com [mailto:dshehee@kawc.com]
Sent: Tuesday, January 10, 2006 3:40 PM
To: julie.roney@ky.gov
Subject: Sulfuric Acid

Julie,

I have done extensive jar testing and I would like to do a plant trial with sulfuric acid in Owenton to see if we can depress the pH to a lower level for better TOC removal. If successful, it is likely that we would move our point of caustic addition to after the clarifier, but prior to the filters to improve manganese removal.

One other thing. I was looking at their CT calculations and they are writing down the chlorine at the bottom of the filters (per your guidance). The only trouble with this is that we add very little chlorine on top of the filter, but add our main volume of chlorine in the main after the flow from the two filters comes together, but prior to the clearwell. Therefore, we are losing quite a bit of CT value in our basement clearwell. I would like your permission to have them check the chlorine in the basement clearwell (as close to application as feasible) and write down that value for the CT calculation.

I am happy to discuss. Thanks for your help Julie.

David Shehee
Water Quality Supervisor
Kentucky American Water
6300 Cedarcreek Lane
Lexington, KY 40515
Phone (859) 335-3660
Fax (859) 335-3388
dshehee@kawc.com

RE: Ferric Trial
Roney, Julie \(EPPC DEP DOW\) to: David.Shehee 04/30/2007 12:33 PM

I'm here.

Julie W. Roney, Supervisor
Technical Assistance and Outreach
Drinking Water Branch
Division of Water
502/564-3410, extension 535
502/564-9899 (fax)

-----Original Message-----
From: David.Shehee@amwater.com [mailto:David.Shehee@amwater.com]
Sent: Monday, April 30, 2007 12:30 PM
To: Roney, Julie (EPPC DEP DOW)
Subject: RE: Ferric Trial

Thanks. I plan on calling you around 1 if you will be in. I would like to
discuss the CTs for the new plant.
(Embedded image moved to file: pic18300.jpg)

"Roney, Julie \(EPPC DEP DOW\)" <Julie.Roney@ky.gov> 04/30/2007 12:29 PM

To: <David.Shehee@amwater.com>
cc:
Subject: RE: Ferric Trial

It's in the mail.

Julie W. Roney, Supervisor
Technical Assistance and Outreach
Drinking Water Branch
Division of Water
502/564-3410, extension 535
502/564-9899 (fax)

-----Original Message-----
From: David.Shehee@amwater.com [mailto:David.Shehee@amwater.com]

Sent: Monday, April 30, 2007 11:21 AM
To: Roney, Julie (EPPC DEP DOW)
Subject: Ferric Trial

Julie,

I would like to do a plant trial with Applied Specialties NSF approved AS2814 Ferric Chloride/polymer blend at our Northern Division treatment plant. Attached is the MSDS. It is likely later that I also will do a plant
trial with Naclo's PolEZ 675 anionic polymer (also attached with the NSF approval). Could you give an approval for these?

(See attached file: Pol EZ 675 NSF.pdf)(See attached file: AS-2814N.pdf)
(See attached file: MSDSPOLEZ675.pdf)

Thanks,
(Embedded image moved to file: pic10133.jpg)

RE: Ferric Trial

Roney, Julie \(EPPC DEP DOW\) to: David.Shehee 04/30/2007 12:28 PM

It's in the mail.

Julie W. Roney, Supervisor
Technical Assistance and Outreach
Drinking Water Branch
Division of Water
502/564-3410, extension 535
502/564-9899 (fax)

-----Original Message-----
From: David.Shehee@amwater.com [mailto:David.Shehee@amwater.com]
Sent: Monday, April 30, 2007 11:21 AM
To: Roney, Julie (EPPC DEP DOW)
Subject: Ferric Trial

Julie,

I would like to do a plant trial with Applied Specialties NSF approved AS2814 Ferric Chloride/polymer blend at our Northern Division treatment plant. Attached is the MSDS. It is likely later that I also will do a plant
trial with Naclo's PolEZ 675 anionic polymer (also attached with the NSF approval). Could you give an approval for these?

(See attached file: Pol EZ 675 NSF.pdf)(See attached file: AS-2814N.pdf)
(See attached file: MSDSPOLEZ675.pdf)

Thanks,
(Embedded image moved to file: pic10133.jpg)

DelPac 2020 at Northern Division
Roney, Julie \(EPPC DEP DOW\) to: dshehee 12/21/2006 07:41 AM

I will get an approval letter out today.

Julie W. Roney, Supervisor
Technical Assistance and Outreach
Drinking Water Branch
502/564-3410, extension 535
502/564-9899 (fax)

RE: Owenton HPC Data
Roney, Julie \(EPPC DEP DOW\) to: dshehee 09/01/2006 11:35 AM

To-date we haven't. I will discuss internally.

Julie W. Roney, Supervisor
Technical Assistance and Outreach
Drinking Water Branch
502/564-3410, extension 535
502/564-9899 (fax)

-----Original Message-----
From: dshehee@kawc.com [mailto:dshehee@kawc.com]
Sent: Friday, September 01, 2006 10:03 AM
To: Roney, Julie (EPPC DEP DOW)
Subject: RE: Owenton HPC Data

Julie,

Julie,

Are there any instances where you look at a system and determine that it no
longer is necessary?

Thanks as always for your help.

David Shehee
Water Quality Supervisor
Kentucky American Water
6300 Cedarcreek Lane
Lexington, KY 40515
Phone (859) 335-3660
Fax (859) 335-3388
dshehee@kawc.com

"Roney, Julie \(EPPC DEP DOW\)" <Julie.Roney@ky.gov> 09/01/2006 09:49 AM

To: <dshehee@kawc.com>
cc:
Subject: RE: Owenton HPC Data

The HPC monitoring is part of DWB's protocol for delaying pre-chlorination to the top of the filters. We don't tend to allow anyone to stop the monitoring but reduce it from weekly to monthly to quarterly.

Julie W. Roney, Supervisor
Technical Assistance and Outreach
Drinking Water Branch
502/564-3410, extension 535
502/564-9899 (fax)
-----Original Message-----
From: dshehee@kawc.com [mailto:dshehee@kawc.com]
Sent: Friday, September 01, 2006 9:19 AM
To: Roney, Julie (EPPC DEP DOW)
Subject: Fw: Owenton HPC Data

Julie,

Please find the attached HPC data for our Northern Division. I was wondering if there was any way that you would consider letting us discontinue this monitoring? We have several years of supporting data now
that all show that there are minimal HPCs. It really would help us with reducing the number of trips personnel make from Owenton to Lexington.

Thanks,

David Shehee
Water Quality Supervisor
Kentucky American Water
6300 Cedarcreek Lane
Lexington, KY 40515
Phone (859) 335-3660
Fax (859) 335-3388
dshehee@kawc.com
----- Forwarded by David Shehee/KAWC/AWWSC on 09/01/2006 09:18 AM -----

Dorothy Johnson

09/01/2006 08:16 AM

To: David Shehee/KAWC/AWWSC@AWW
cc:
Subject: Owenton HPC Data

(See attached file: Owenton Micro & related data-updated.xls)

RE: Owenton HPC Data
Roney, Julie \(EPPC DEP DOW\) to: dshehee 09/01/2006 09:57 AM

The HPC monitoring is part of DWB's protocol for delaying pre-chlorination to the top of the filters. We don't tend to allow anyone to stop the monitoring but reduce it from weekly to monthly to quarterly.

Julie W. Roney, Supervisor
Technical Assistance and Outreach
Drinking Water Branch
502/564-3410, extension 535
502/564-9899 (fax)
-----Original Message-----
From: dshehee@kawc.com [mailto:dshehee@kawc.com]
Sent: Friday, September 01, 2006 9:19 AM
To: Roney, Julie (EPPC DEP DOW)
Subject: Fw: Owenton HPC Data

Julie,

Please find the attached HPC data for our Northern Division. I was wondering if there was any way that you would consider letting us discontinue this monitoring? We have several years of supporting data now
that all show that there are minimal HPCs. It really would help us with reducing the number of trips personnel make from Owenton to Lexington.

Thanks,

David Shehee
Water Quality Supervisor
Kentucky American Water
6300 Cedarcreek Lane
Lexington, KY 40515
Phone (859) 335-3660
Fax (859) 335-3388
dshehee@kawc.com
----- Forwarded by David Shehee/KAWC/AWWSC on 09/01/2006 09:18 AM -----

Dorothy Johnson

To: David Shehee/KAWC/AWWSC@AWW

09/01/2006 08:16 AM

cc:

Subject: Owenton HPC Data

(See attached file: Owenton Micro & related data-updated.xls)

RE: Raw Water Sampling
Roney, Julie \(EPPC DEP DOW\) to: dshehee 05/30/2006 10:30 AM

David, we are checking on what we need on the new KAWC Pool 3 plant in terms of new source water monitoring.

For the Crypto sampling for LT2 for the Pool 3 KAWC plant, could you or Rich provide a larger map with land uses designated on it? If there is a feel for relocating this proposed intake up or down stream, I will need land uses within that relocation range as well.

For the Owenton intake with its 2 withdrawal elevations, would both intakes be used all the time or would it be managed more like a reservoir situation with alternating between the 2 levels looking for the better quality water. This may be difficult to answer but I am trying to determine at what depth it would be best to sample.

-----Original Message-----
From: dshehee@kawc.com [mailto:dshehee@kawc.com]
Sent: Tuesday, May 30, 2006 8:57 AM
To: Roney, Julie (EPPC DEP DOW)
Cc: Marlin, Donna (EPPC DEP DOW); Riley, Mike (Justice)
Subject: RE: Raw Water Sampling

Julie,

Yes, that is the sampling I was referring to in my E-mail. Have you heard
anything back on this?

David Shehee
Water Quality Supervisor
Kentucky American Water
6300 Cedarcreek Lane
Lexington, KY 40515
Phone (859) 335-3660
Fax (859) 335-3388
dshehee@kawc.com

"Roney, Julie \(EPPC DEP DOW\)" <Julie.Roney@ky.gov> 05/24/2006 07:45 AM

To: <dshehee@kawc.com>
cc: "Riley, Mike \(Justice\)" <Mike.Riley@ky.gov>, "Marlin, Donna \(EPPC DEP DOW\)" <Donna.Marlin@ky.gov>
Subject: RE: Raw Water Sampling

RE: Chemicals for Northern Division
Roney, Julie \(EPPC DEP DOW\) to: dshehee 05/01/2006 02:19 PM
Cc: "Amawi, Shafiq \(EPPC DEP DOW\)"

What percent caustic and is the fluoride HFS or a dry chemical?

I don't know if anyone approves wastewater chemicals but I'll forward to Faclities Construction just in case. Shafiq, does anyone in your branch do chemical approvals for WWTPs?

From: dshehee@kawc.com [mailto:dshehee@kawc.com]
Sent: Mon 5/1/2006 1:25 PM
To: Roney, Julie (EPPC DEP DOW)
Cc: rbuchana@kawc.com
Subject: Chemicals for Northern Division

Julie,

We are going to change our provider for the following chemicals in our Northern Division.

Caustic
Fluoride
Coagulant Aid

We will be using Univar for these going forward. All are NSF approved. The coagulant aid is 1849A, which is what they were using prior to the switch to Nalco, which has not been working as well.

Also, our SO2 for the WWTP will now be provided by Univar as well.

Thanks,

David Shehee
Water Quality Supervisor
Kentucky American Water
6300 Cedarcreek Lane
Lexington, KY 40515
Phone (859) 335-3660
Fax (859) 335-3388
dshehee@kawc.com

RE: Sternpac 70
Roney, Julie \(EPPC DEP DOW\) to: **dshehee** 03/23/2006 12:00 PM

That's ok, but I would double check with the manufacturer as to it's quality after it's been sitting for several years. The shelf-life of those PACls is fairly short.

Julie W. Roney, Supervisor
Technical Assistance and Outreach
KY Drinking Water Branch
502/564-3410
502/564-9899 (fax)
-----Original Message-----
From: dshehee@kawc.com [mailto:dshehee@kawc.com]
Sent: Monday, March 20, 2006 9:34 AM
To: Roney, Julie (EPPC DEP DOW)
Subject: Sternpac 70

Julie,

We have some older drums of SternPac 70 at our Northern Division plant from
where Jan did a trial a few years ago. I would like your permission to feed
it in our rapid mix to get rid of it. As you know, we currently feed ferric
chloride so it shouldn't be a problem.

Thanks,

David Shehee
Water Quality Supervisor
Kentucky American Water
6300 Cedarcreek Lane
Lexington, KY 40515
Phone (859) 335-3660
Fax (859) 335-3388
dshehee@kawc.com

RE: Revised Page 1 for KY0940430
Vaughn, Amber (EPPC DEP DOW) to: David.Shehee 06/07/2007 10:21 AM

David,
Got it and looks good. Thanks.

Amber Vaughn

-----Original Message-----
From: David.Shehee@amwater.com [mailto:David.Shehee@amwater.com]
Sent: Thursday, June 07, 2007 9:51 AM
To: Vaughn, Amber (EPPC DEP DOW)
Subject: Revised Page 1 for KY0940430

Hey Amber,

I received your phone message yesterday. Instead of faxing, I decided to scan the page and e-mail it to you. Let me know if there is anything else I
need to do.

(See attached file: Revised Pg 1 April MOR Northern Division to State 0607070001.pdf)

Sorry for the inconvenience,

David B. Shehee
Water Quality Supervisor
Kentucky American Water
6300 Cedarcreek Lane
Lexington, Kentucky 40515
(859) 335-3660 office
(859) 335-3388 fax
david.shehee@amwater.com

Changes of Ownership

Workman, Ann (EPPC DEP DOW) to: 'dshehee@kawc.com' 01/25/2006 01:51 PM

Mr. Shehee: In clearing our backlog of KPDES changes of ownership I have recently discovered your request of November 15, 2005 for the City of Owenton. We are in receipt of a change for the water treatment plant, a letter for Drinking Water referencing the change of ownership forms, however, there do not appear to be any forms. We are also in receipt of two changes of ownership referencing the numbers 0863 and 0874. These are not KPDES permit numbers, could you please inform me of your intention of these forms. Also, is there a change of address to the sewage treatment plant KPDES No. KY0038212? Thank you for your assistance in this matter.

Ann S. Workman
KPDES Branch
Inventory and Data Management Section
Division of Water
Phone: 502/564-3410 Ext. 528
E-mail: ann.workman@ky.gov

ENVIRONMENTAL AND PUBLIC PROTECTION CABINET
DEPARTMENT FOR ENVIRONMENTAL PROTECTION

Ernie Fletcher
Governor

Division of Water
14 Reilly Road
Frankfort, Kentucky 40601-1190
www.kentucky.gov

Teresa J. Hill
Secretary

April 30, 2007

Mr. David Shehee
KAWC/Northern Division
6300 Cedar Creek Lane
Lexington, Kentucky 40515

RE: PWSID #0940430
Chemical Change

Dear Mr. Shehee:

This is to authorize the KAWC/Northern Division water treatment plant's use of the Applied Specialties' ferric chloride polymer blend AS2814 and Nalco's polyacrylamide POL-E-Z 675 for coagulation purposes. The products are NSF-approved to maximum dosages of 263 and 3.5 mg/L, respectively.

If you have any questions, I can be reached at 502/564-2225, extension535.

Sincerely,

Julie W. Roney

Julie W. Roney, Supervisor
Technical Assistance and Outreach
Drinking Water Branch
Division of Water

PUBLIC WATER SYSTEM FLUORIDATION ROUTINE INSPECTION

CHS ORAL HEALTH PROGRAM

PWSID#: 0940430
Contact Name: BOBBY OBANION 502 484-9077
Owner Name:
Address: KY AMERICAN WATER CO
Facility Name: TRI-VILLAGE WD
Other Information: KY AMERICAN WATER CO,OWENTON,KY,40359

GENERAL

PWS ID: 0940430
CERTIFICATION #: MARTY OLSON 20376
WATER SOURCE: Surface Water
FLUORIDATION TYPE: Acid
SERVICE CONNECTIONS: 4190
POPULATION SERVED: 10894
AVG PRODUCTION: 850,000
FLOW RATE (gpm): 760
DESIGN CAPACITY: 1.4 MGPD
Inspector ID: 4
Inspection date: 11/04/10

Items

CHEMICAL TREATMENT:

FLUOROSILIC ACID: X

a) CHEMICAL USED::
CHLORINE: X

ACTIVATED CARBON: X

FERRIC CHLORIDE: X

SULFURIC ACID: X

OTHERS: X

CAUSTIC
POLYMER
SODIUM PERMANGANATE

PLANT SAFETY EQUIPMENT:

b) SYPHON BREAKERS:
RATING: SATISFACTORY

c) VENTILATION:
RATING: SATISFACTORY

d) STORAGE:
RATING: SATISFACTORY

e) METHOD OF MEASUREMENT:
Type Of Measurement: Scales

RATING: SATISFACTORY

OPERATOR SAFETY EQUIPMENTS:

f) RESPIRATOR:
RATING: SATISFACTORY

g) FACE SHEILD:
RATING: SATISFACTORY

h) GLOVES:
RATING: SATISFACTORY

I) APRON:
RATING: SATISFACTORY

LABORATORY AND RECORDS:

j) TESTER:
TESTER BRANDS: HACH ION

RATING: SATISFACTORY

K) ADEQUATE REAGENT SUPPLY:
RATING: SATISFACTORY

l) REAGENT UP TO DATE:
RATING: SATISFACTORY

m) MONTHLY OPERATING REPORTS:
RATING: SATISFACTORY

n) HOUSEKEEPING:
RATING: SATISFACTORY

DISTRIBUTION:

o) MASTER METER:
RATING: SATISFACTORY

p) POINT OF INJECTION:
RATING: SATISFACTORY

q) CHEMICAL FEEDER:
RATING: SATISFACTORY

FEEDER'S BRAND: UNI DOSE

MASTER FLEX
FEEDER SIZE: *

PERISTOLIC

ON SITE OBSERVATION:

r) FLUORIDE READINGS:
RATING: SATISFACTORY

PRIVATE LABS: State Lab

AMERICAN WATER - CENTRAL

(1) SPLIT:
RATING: SATISFACTORY

INSP: 0.96

PLANT: 1.12

Additional Comments: 1

PLANT IN COMPLIANCE ALL YEAR. SAMPLES SENT IN ON TIME.
WELL RUN PLANT.
VERY PROFESSIONAL PLANT.

BOB, MURPHY
DH-35 (5/03)

PUBLIC WATER SYSTEM FLUORIDATION ROUTINE INSPECTION

CHS ORAL HEALTH PROGRAM

[redacted]: 0940430
[redacted] Name: BOBBY OBANION 502 484-9077
[redacted] Name:
Address: KY AMERICAN WATER CO
Facility Name: TRI-VILLAGE WD
Other Information: KY AMERICAN WATER CO,OWENTON,KY,40359

GENERAL

PWS ID: 0940430
CERTIFICATION #: BOBBY OBANION 1358
WATER SOURCE: Surface Water
FLUORIDATION TYPE: Acid
SERVICE CONNECTIONS: 4140
POPULATION SERVED: 10764
AVG PRODUCTION: 700,000
FLOW RATE (gpm): 750
DESIGN CAPACITY: 1.4 MGPD
Inspector ID: 4
Inspection date: 05/08/09

Items

CHEMICAL TREATMENT:

FLUOROSILIC ACID: X

a) CHEMICAL USED::

CHLORINE: X

ACTIVATED CARBON: X

FERRIC CHLORIDE: X

SULFURIC ACID: X

OTHERS: X

CAUSTIC
POLYMER
SODIUM PERMANGANATE

PLANT SAFETY EQUIPMENT:

b) SYPHON BREAKERS:
RATING: SATISFACTORY

c) VENTILATION:
RATING: SATISFACTORY

d) STORAGE:
RATING: SATISFACTORY

e) METHOD OF MEASUREMENT:
Type Of Measurement: Scales

RATING: SATISFACTORY

OPERATOR SAFETY EQUIPMENTS:

f) RESPIRATOR:
RATING: SATISFACTORY

g) FACE SHEILD:
RATING: SATISFACTORY

h) GLOVES:
RATING: SATISFACTORY

I) APRON:
RATING: SATISFACTORY

LABORATORY AND RECORDS:

j) TESTER:
TESTER BRANDS: HACH ION

RATING: SATISFACTORY

K) ADEQUATE REAGENT SUPPLY:
RATING: SATISFACTORY

l) REAGENT UP TO DATE:
RATING: SATISFACTORY

m) MONTHLY OPERATING REPORTS:
RATING: SATISFACTORY

n) HOUSEKEEPING:
RATING: SATISFACTORY

DISTRIBUTION:

o) MASTER METER:
RATING: SATISFACTORY

p) POINT OF INJECTION:
RATING: SATISFACTORY

q) CHEMICAL FEEDER:
RATING: SATISFACTORY

FEEDER SIZE: PERISTOLIC

ON SITE OBSERVATION:

r) FLUORIDE READINGS:
RATING: SATISFACTORY

(1) SPLIT:
RATING: SATISFACTORY

INSP: 0.98

PLANT: 1.05

Additional Comments: 1

PLANT IN COMPLIANCE ALL YEAR. SAMPLES SENT IN ON TIME.
WELL RUN PLANT.
VERY PROFESSIONAL PLANT.

Recommendations and Notes

BOB, MURPHY
DH-35 (5/03)

Brenntag Mid-South, Inc.

1405 Highway 136 W • P.O. BOX 20
Henderson, Kentucky 42419-0020

Received
DEC 07 2007
SSC-Mailroom

BRENNTAG

INVOICE#: BMS396348 INV DATE: 11/29/07 *** PAGE 1 OF 1 ***
DUE DATE: 12/29/07

SOLD TO:
AMERICAN SHARED WATER SERVICE
FBO KY AMER WATER (OWENTON)
PO BOX 5610
CHERRY HILL NJ 08034

SHIP TO:
KY AMERICAN WATER COMPANY
OWENTON WATER PLANT
220 WATER PLANT LANE
OWENTON KY 40359

FEDERAL ID #.: 610504545 DATE SHIPPED: 11/29/07 TERMS . . : NET 30 DAYS
B/L #. . . . : 929894-00 SHIP WHS: 40 SALESPRSN: 404
CUSTOMER # .: 520451 SHIP VIA: OUR TRUCK - PKG
CUSTOMER PO#: 15103665 FOB . . : DELIVERED
TAX EX# : 40590

UNITS SHIPPED	PROD #	WGT/GAL	TOTAL QTY	UNIT PRICE	EXTENDED
** DO NOT MAIL CONTAINER DEPOSIT CREDIT MEMOS **					
10.0000	195561	9.760	485.0000#	1.1700	567.45
48.5000 # PAIL		SOD PERMANGANATE 20% NSF CARUSOL		8> F/S	

50 141748

OV 10214100

QUESTIONS, CALL 502-863-2874

****
* REMIT TO ADDRESS: *
* BRENNTAG MID-SOUTH, INC *
* 3796 RELIABLE PARKWAY *
* CHICAGO IL 60686-0037 *
****

MERCHANDISE	567.45
PAID ON OR PRIOR TO 12/29/07 INVOICE TOTAL	567.45
PAID AFTER 12/29/07 INVOICE TOTAL	573.12

Original Document

*** ALL SALES SUBJECT TO AND GOVERNED BY THE TERMS AND CONDITIONS SET FORTH ON THE REVERSE SIDE ***

Brenntag Mid-South, Inc.

1405 Highway 136 W • P.O. BOX 20
Henderson, Kentucky 42419-0020

BRENNTAG [redacted]

Received
NOV 16 2007
-Mailroom

50141748

INVOICE#: BMS386601 INV DATE: 11/07/07 *** PAGE 1 OF 1 ***
DUE DATE: 12/07/07

SOLD TO:
AMERICAN SHARED WATER SERVICE
FBO KY AMER WATER (OWENTON)
PO BOX 5610
CHERRY HILL NJ 08034

SHIP TO:
KY AMERICAN WATER COMPANY
OWENTON WATER PLANT
220 WATER PLANT LANE
OWENTON KY 40359

FEDERAL ID #: 610504545 DATE SHIPPED: 11/07/07 TERMS . . : NET 30 DAYS
B/L #. . . . : 922805-00 SHIP WHS: 40 SALESPRSN: 404
CUSTOMER # . : 520451 SHIP VIA: OUR TRUCK - PKG
CUSTOMER PO#: 15103665 FOB . . : DELIVERED
TAX EX# : 40590

UNITS SHIPPED	PROD #	WGT/GAL	TOTAL QTY	UNIT PRICE	EXTENDED
** DO NOT MAIL CONTAINER DEPOSIT CREDIT MEMOS **					
10.0000	195561	9.760	485.0000#	1.1700	567.45
48.5000 # PAIL			SOD PERMANGANATE 20% NSF CARUSOL 7> F/S		

Rec
10211247

QUESTIONS, CALL 502-863-2874

****
* REMIT TO ADDRESS: *
* BRENNTAG MID-SOUTH, INC *
* 3796 RELIABLE PARKWAY *
* CHICAGO IL 60686-0037 *
****

MERCHANDISE 567.45

PAID ON OR PRIOR TO 12/07/07 INVOICE TOTAL 567.45

PAID AFTER 12/07/07 INVOICE TOTAL 573.12

Original Document

Atlanta, GA	Columbus, OH	Indianapolis, IN	Miami, FL	St. Albans, WV
Bartonville, IL	Georgetown, KY	Kansas City, MO	Nashville, TN	St. Louis, MO
Calvert City, KY	Greeneville, TN	Kennesaw, GA	Nitro, WV	Tampa, FL
Chattanooga, TN	Henderson, KY	Louisville, KY	Orlando, FL	Terre Haute, IN
Clearwater, FL	Huntsville, AL	Memphis, TN	Springfield, MO	Valdosta, GA

*** ALL SALES SUBJECT TO AND GOVERNED BY THE TERMS AND CONDITIONS SET FORTH ON THE REVERSE SIDE ***

Brenntag Mid-South, Inc.

1405 Highway 136 W • P.O. BOX 20
Henderson, Kentucky 42419-0020

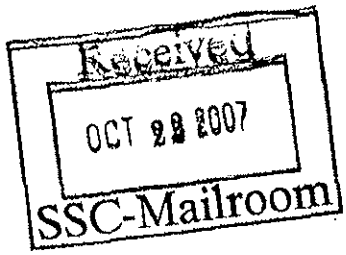

BRENNTAG

5014748

A12SPEC01

INVOICE#: BMS375043 INV DATE: 10/17/07 *** PAGE 1 OF 1 ***
DUE DATE: 11/16/07

SOLD TO:
AMERICAN SHARED WATER SERVICE
FBO KY AMER WATER (OWENTON)
PO BOX 5610
CHERRY HILL NJ 08034

SHIP TO:
KY AMERICAN WATER COMPANY
OWENTON WATER PLANT
220 WATER PLANT LANE
OWENTON KY 40359

FEDERAL ID #: 610504545 DATE SHIPPED: 10/17/07 TERMS . . : NET 30 DAYS
B/L #. . . . : 908150-00 SHIP WHS: 40 SALESPRSN: 404
CUSTOMER # . : 520451 SHIP VIA: OUR TRUCK - PKG
CUSTOMER PO#: VERBAL - DAVID SHEHEE FOB . . : DELIVERED
TAX EX# : 40590

UNITS SHIPPED	PROD #	WGT/GAL	TOTAL QTY	UNIT PRICE	EXTENDED
** DO NOT MAIL CONTAINER DEPOSIT CREDIT MEMOS **					
5.0000	195561	9.760	242.5000#	1.1700	283.73
48.5000 # PAIL		SOD PERMANGANATE 20% NSF CARUSOL		6> F/S	

QUESTIONS, CALL 502-863-2874

****
* REMIT TO ADDRESS: *
* BRENNTAG MID-SOUTH, INC *
* 3796 RELIABLE PARKWAY *
* CHICAGO IL 60686-0037 *
************************************ MERCHANDISE 283.73

PAID ON OR PRIOR TO 11/16/07 INVOICE TOTAL 283.73

PAID AFTER 11/16/07 INVOICE TOTAL 286.57

Original Document

Atlanta, GA	Columbus, OH	Indianapolis, IN	Miami, FL	St. Albans, WV
Bartonville, IL	Georgetown, KY	Kansas City, MO	Nashville, TN	St. Louis, MO
Calvert City, KY	Greeneville, TN	Kennesaw, GA	Nitro, WV	Tampa, FL
Chattanooga, TN	Henderson, KY	Louisville, KY	Orlando, FL	Terre Haute, IN
Clearwater, FL	Huntsville, AL	Memphis, TN	Springfield, MO	Valdosta, GA

*** ALL SALES SUBJECT TO AND GOVERNED BY THE TERMS AND CONDITIONS SET FORTH ON THE REVERSE SIDE ***

KENTUCKY
AMERICAN WATER

Kentucky American Water
2300 Richmond Road
Lexington, KY 40502
www.amwater.com

P 859-268-6373
F 859-268-6374

Ms. Rita Hockensmith
Water Quantity Management Section
Watershed Management Branch
Division of Water
Kentucky Energy and Environment Cabinet
200 Fair Oaks Lane, 4th Floor
Frankfort, KY 40601

RE: Revision Application Withdrawal Permit #0863 (AI 34054)

September 27, 2011

Dear Ms. Hockensmith:

Attached is a copy of a permit application for a revision to Kentucky American Water's Withdrawal Permit #0863 for the Owenton Water Treatment Plant. Due to steady growth, our demands have increased over the last few years. As you noted in your August 30, 2011 letter, the withdrawals have regularly exceeded the permit amounts.

We believe the attached permit application represents a request for permit limits in keeping with our actual use. Please let me know if there are any questions or concerns. My e-mail address is Linda.bridwell@amwater.com or my telephone number is 859-268-6373.

Sincerely,

Linda C. Bridwell

Linda C. Bridwell, PE
Director Water Quality and Environmental Compliance

C: R. Kevin Kruchinski
David Shehee

APPLICATION FOR A PERMIT TO WITHDRAW WATER

Natural Resources and Environmental Protection Cabinet

200 Fair Oaks **Division of Water** Frankfort, KY 40601

Action Desired (check one): ____ New Permit
__X__ Revision to Permit __0863__
Number

Division Use Only
Permit No. _____

Applicant Information

Kentucky-American Water Company
Name of Person or Organization Requesting Permit (This name will be on any permit resulting from this application.)

2300 Richmond Road | Lexington | KY | 40502
Street Address | City | State | Zip Code

Standard Industrial Classification (SIC) Code __4941__

Permit Request

Why is this new permit /permit revision necessary? To provide source of supply to a existing water treatment plant serving Owen County by Kentucky American Water.

If facility uses multiple sources of water, **complete one application form for each water source.**
If multiple sources are used, is this application for a primary __X__ or secondary _____ source? (check one)

Date proposed water withdrawals would begin _____.
If facility constructed _____ or proposed ____?

Amount of water facility wishes to withdraw on an average operational day in each month.
Give amounts the facility expects to use **in gallons per day**:

Jan. 1,100,00	April 1,100,000	July 1,200,000	Oct. 1,200,000
Feb. 1,100,000	May 1,100,000	Aug. 1,200,000	Nov. 1,200,000
Mar. 1,100,000	June 1,200,000	Sept. 1,200,000	Dec. 1,200,000

Maximum Daily Pumping Rate: 1,440,000

Please provide some detail regarding the proposed withdrawal amounts and the pumping schedule.

Water Treatment Plant provides water to City of Owenton and surrounding Owen County. Typically, withdrawals from would be 850,000 gallons per day to 1,000,000 gallons per day depending on weather which greatly influences customer demands.

Please accurately complete the sections of this application that pertain to your source(s). Questions about this application or the water withdrawal permitting program may be addressed to the Water Quantity Management ection of the Division of Water at (502) 564-3410.

THIS PAGE TO BE COMPETED BY **SURFACE WATER APPLICANTS** ONLY.

Source of Water

Location of Intake

Owen (County) N38° 28' 05.40" (Latitude) W84° 55' 01.53" (Longitude)

Type of Source (check one) Stream ___X___ Impoundment _____ Spring _____.

Name of Water Source Severn Creek

Stream Mile (if known) 0.5 mile

Describe Location if Stream Mile Is Unknown _____

Water Supply Availability

Does this facility have access to records of stream flow? Yes ___ No _X_.

If yes, how long has flow data been collected? _____

Method or device for recording flow? _____

Describe data records. _____

ıpoundment (Complete only if withdrawal is from an impoundment.)

NOTE: If the applicant shown on Page 1 does not own the impoundment, proof of permission to withdraw must be attached to this application.

Name of Impounded Stream (if applicable) | Name of Impoundment | Approximate Impoundment Volume

Name and Address of Impoundment Owner

Stream construction permit or dams inventory number (if known)_____ Date Constructed _____

How was volume determined? _____

Impoundment Drainage Area _____

If appearance is important, give maximum amount of drawdown permissible. _____

Withdrawal Statistics

Is pump portable? Yes _____ No _X_ Rated Capacity of Pump 1 at 850 gpm, 1 at 700 gpm

Provide elevation of each intake structure (in feet above mean sea level) 423 feet approximately

Depth of water over intake at normal pool or average flows 443 feet (if applicable)

Minimum depth of water (over intake) required for operation 5+ feet (if applicable)

THIS PAGE TO BE COMPLETED BY **GROUNDWATER APPLICANTS** ONLY.

Source of Water

If the water source for this withdrawal is a well or field of wells, complete the following table (attach extra sheets if necessary). Number of wells _____
If the source is a spring, complete **Spring-fed Sources**, page 7.
If the source is not a well or a spring, attach a detailed description of the source and method of withdrawal.

County: _____ Certified Well Driller (if drilled since 1985) _____

Well ID	EXAMPLE Well #1				
Latitude Longitude	37°31'22" N 85°32'19" W				
AKGWA # (if known)	0001-1038				
Status*	A				
Existing or Proposed	existing				
Well Diameter	10"				
Well Depth	120'				
Casing Depth	80'				
Screened Interval	80' - 100'				
Screen Diameter	8"				
Elevation of Well	650'				
Static Water Level	60'				
Pump Type & Location	submersible				
Pump Capacity	100 gpm				
Average Daily Withdrawal	70,000 gpd				
Metered Y/N	yes				
Type of Meter	Johnson				
Use of Water	heat/cool				
Date of Well Construction	June 1996				
Log Available Y/N	yes				
Drilling Method	air rotary				
Well Development Method	surging				

*Status: A = Active; I = Inactive; P = Plugged; D = Dry

THIS PAGE TO BE COMPLETED FOR **SPRING-FED SOURCES** ONLY.

Spring-Fed Sources AKGWA # _____ (if known)

Spring Characteristics County: _____ (if known)

Spring Name: _____

Spring Owner: _____

Address: _____

City: _____ State: _____ Zip Code: _____

Intake Location: Latitude _____ Longitude _____

Describe Intake: _____

Spring Type: Seep _____ Gravity _____ Bluehole (artesian) _____

Is this spring the headwaters of a surface stream? Yes _____ No _____

If yes, what is the name of the stream? _____

Type of flow: Perennial _____ Seasonal _____ Intermittent _____

Spring discharges from: Cave ____ Rock ____ Fracture ____ Soil ____ Alluvium ____

Mine Adit ____ Other ____

Spring discharges into: Stream ____ Pond or Lake ____ Sinkhole ____ Other _____

Name of stream, pond, or lake _____

Average Discharge (in cubic feet per second or gallons per day) _____

How was flow determined? Measured _____ Type of Meter: _____

Estimated _____ Describe Calculations: _____

Have any water (dye) traces been run to this site? Yes _____ No _____

If yes, complete the following.

Name of Person Conducting Trace: _____

Address: _____

City: State: _____ Zip Code: _____

Date of Trace: _____ Trace #: _____

Are there other users of this spring? Yes ____ No ____ If yes, give names, amounts, and type of use:

_____

_____

THIS PAGE IS TO BE COMPLETED BY BOTH **SURFACE AND GROUNDWATER APPLICANTS.**

Other Intakes and Back-up Water Sources

Other water withdrawal permits held by this facility (give water withdrawal permit numbers):

0874

Other, non-permitted intakes (give location and explanation):

Public Water Supply Information (Complete only if the applicant is a public water supplier.)

Number of People Served 9,500 Number of Connections Served 3,916

Water Treatment Plant Capacity 1.44 MGD Current Average Production 929,800 gpd

Finished Water Storage Capability (number, type, and capacity): 9 standpipes, 2 elevated storage tanks, 1.74 mg total

List the approximate percentage of water distributed to each of the following:

Residential	44.58 %	Public/Institutional	1.28 %
Industrial	0 (with comm.)%	Other	49.46 %
Commercial	4.54 %	Sold to other water suppliers	0.15 %

If water is to be sold to other water systems or suppliers, list them:*

1. Peaks Mill Water District
Name of Supplier

7165 US 127 N.,
Address

Frankfort, KY 40601

1,600 gpd
Gallons per day Sold

3.
Name of Supplier

Address

Gallons per day Sold

2.
Name of Supplier

Address

Gallons per day Sold

4.
Name of Supplier

Address

Gallons per day Sold

If additional water is purchased from other water systems, list them:*

1. Georgetown Municipal Water and Sewer Service
Name of Supplier

125 West Clinton Street
Address

Georgetown, KY 40324

37, 400
Gallons per day Purchased
Additional system listed in attachment 1.

2. Carroll County Water District
Name of Supplier

P.O. Box 350
Address

Ghent, KY 41045

62,100
Gallons per day purchased

THIS PAGE TO BE COMPLETED BY **ALL APPLICANTS.**

Siting

Attach a U.S. Geological Survey 71/2 minute quadrangle map, or a legible photocopy of the portion of the map containing this site. USGS maps can be obtained from the Kentucky Geological Survey, 228 Mines and Minerals Resource Building, UK, Lexington, KY, 40506 (phone 859-257-5500). Mark the map with the following information, where available:

a. Surface intake or wells
b. Pumping sites
c. Raw water storage facilities
d. Water treatment plants
e. Wastewater discharge site(s)
f. Dams and reservoirs
g. Service Boundaries
h. Back-up water supply intakes

Give name of map quadrangle: Gratz (See attachment 2)

Water Transfer from Intake to Discharge

In the area below, sketch and label a map of the proposed water intake(s) and transfer of water at the permit site. (Sketch map may be drawn by hand and/or attached.)

Include the following:

a. Location of water intake site(s)
b. Location of pump(s) and metering device(s)
c. Course and direction of flow at the site (do not show flow inside of buildings)
d. Course and amount of water being recycled
e. Location of the discharge site(s) and average amount of water being discharged

See Attachment 3.

THIS PAGE TO BE COMPLETED BY **ALL APPLICANTS**.

er Use Information

Purposes for which the water is to be used:

Public Drinking Water Supply

Major products or services, and production rate (if applicable):

Does this facility have an emergency response plan for drought or other shortage? Yes X No ____

If yes, summarize the plan or attach a full description. Incorporated into similar plan for Central Division of Kentucky American Water, it restricts customers through 5 phases as necessary depending on flow and demands.

Storage Information

Raw (untreated) water storage capability, specify storage ponds or tanks and city the capacity of each.

n/a

Discharge Information

Discharge to city sewer? Yes _____ No X .

If no, give name of stream receiving discharge. Unnamed tributary of North Severn Creek

River mile or latitude/longitude. N 38.52183/W 84.849451 County Owen

Average amount of water returned (gallons per day) 50,000 gpd.

If this amount varies from average withdrawal, explain why. Water sold to customers, discharge only for in plant

Method used to estimate discharge rate: Estimated based on similar plants operated by Company.

Discharge permit numbers: KYG640069 _____ _____ _____

Irrigation Information (Complete only if withdrawal is being used for maintaining grasses or other plants.)

Number of acres being irrigated: _____

The average rate of application (for example, 2 inches per acre per week, May through August):

_____ per _____ per _____, _____ through _____.
Inches or gallons (circle one) | area | time (day, week) | month | month

Ownership Change

Reason for Ownership Change: _____

_____ _____
Print Seller Name | Print Purchaser Name

_____ _____
Signature of Seller | Signature of Purchaser

Reporting of Water Withdrawals

KRS 151.160 requires that permit holders report actual water withdrawals.

Provide the name and address of the contact person to be in charge of reporting actual withdrawals to the Division.

David Shehee — Contact Person
Water Quality Supervisor — Title

2300 Richmond Road, Lexington, KY 40502 — Address

859-335-3660 — Telephone

How is withdrawal measured? (check one) Meter X Other (describe) _____

List the make and model of meter: Badger Mag meter

Age of meter 10+ years Date of most recent calibration 4+ years

Explain calculations for estimating daily withdrawal amounts. Based on withdrawals for last year that have increased above current permitted amount.

Application Verification

Linda C. Bridwell, P.E. - Kentucky American Water
Name of Person or Organizational Representative Requesting Permit

Title Director Water Quality and Environmental Compliance

Signature Linda C. Bridwell Date 9/29/11

If application is prepared by a consultant or other person independent of the facility requesting permit, provide contact information below.

Name of consulting company or other organization

Address

Telephone

If approved, who do you wish the permit be mailed to? Consultant _____ Applicant X

Mail completed application to:

Watershed Management Branch
Kentucky Division of Water
200 Fair Oaks
4th Floor
Frankfort, Kentucky 40601

Attachment 1 – Additional Water Purchaser

3. Gallatin County Water District
4500 Highway 455
Sparta, KY 41086
29,400 gallons per day purchased

Clay Lick
Lowderbush
Gratz
(BM 484)
Intake Site
Clements Bottom
Mile 36
Spring Branch
HENRY CO
OWEN CO
KENTUCKY RIVER
Bottom
Mile 40
OWEN CO

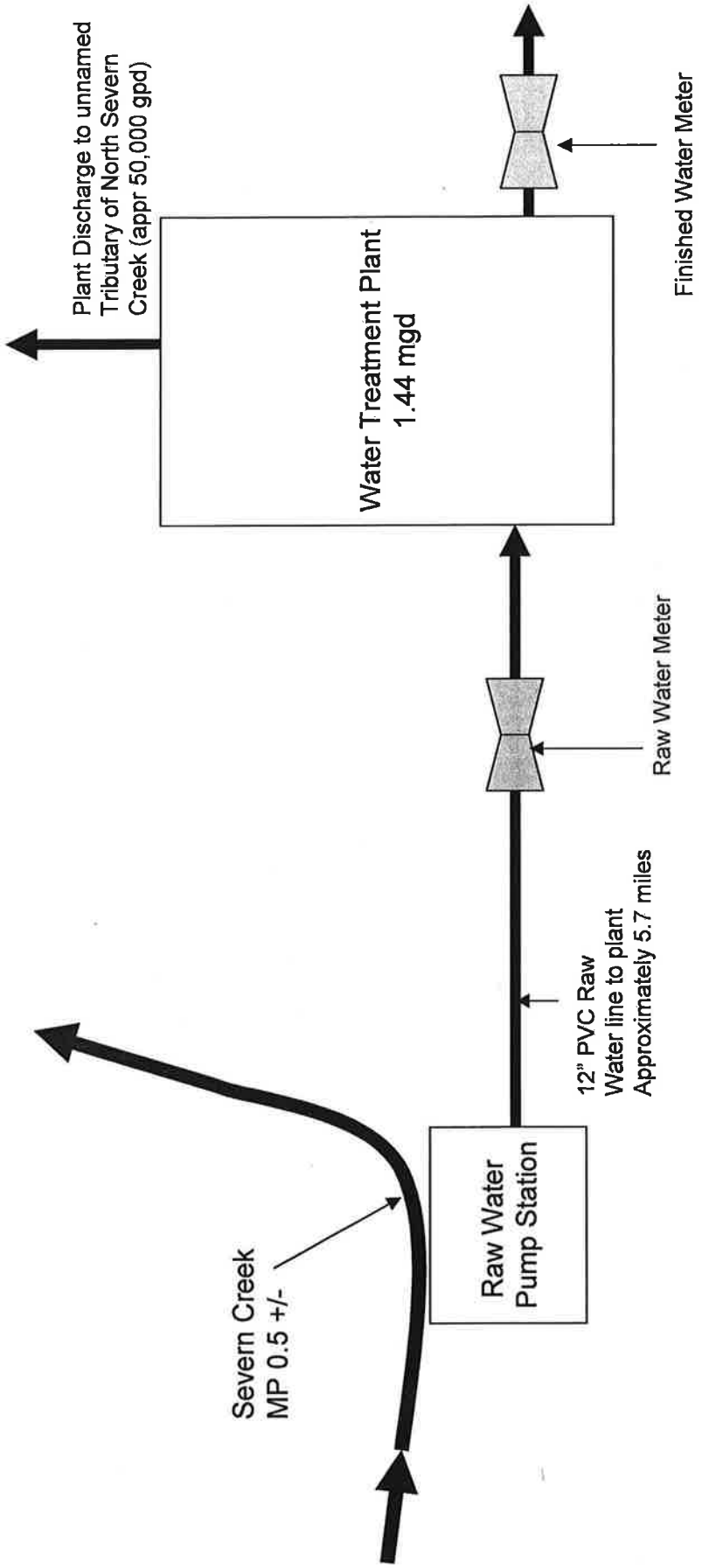

Not to Scale

Attachment 3

KENTUCKY
AMERICAN WATER

2300 Richmond Rd
Lexington, KY 40502
kawc.com

P (859) 335-3660
F (859) 335-3388

June 26, 2008

Julie Roney
Division of Water
14 Reilly Road
Frankfort, KY 40601

Dear Ms. Roney,

Kentucky American Water's – Northern Division (KY0940430) did some preliminary E-coli testing for their two source waters, Thomas Lake and Severn Creek, and found that Cryptosporidium testing would be required to meet LT2 sampling and analysis requirements. Consequently, rather than submitting E-coli information, I have included Intent to Grandfather Notices for both source waters.

If you have any questions or concerns with this information, you may reach me at david.shehee@amwater.com or (859) 335-3660.

Sincerely,

David Shehee
Water Quality Supervisor

cc: WQ Files

Long Term 2 Enhanced Surface Water Treatment Rule

Intent to Grandfather - Notice for Kentucky American Water – Northern Division's Severn Creek

Public Water Systems (PWSs) that will submit grandfathered data for the LT2 Rule must first submit a notice that they intend to submit previously collected monitoring results. This notice must specify the number of previously collected results that the system will submit, the dates of the first and last sample, and whether they will collect additional source water monitoring samples to meet the requirements of the rule. If a PWS plans to collect additional samples, it must also submit a monitoring schedule. Submitting this form satisfies the requirement to submit a notice of intent to grandfather.

Submit this information no later than 3 months prior to the month that the PWS is required to start monitoring.

PWS Information	
PWS Name: Kentucky American Water – Northern Division	PWS ID: KY0940430
PWS Address: 2300 Richmond Road, Lexington, KY 40502	
Email Address: david.shehee@amwater.com	
Water Treatment Plant Name: Kentucky American Water – Northern Division WTP	
Water System Facility ID: 0940430TPA	
Grandfathered Data Information	
Number of previously collected sample results that will be submitted: 24	
Date of first sample: 03/12/07	
Date of last sample: 02/09/09	
Will you be collecting additional source water monitoring samples to meet the requirements of your plant? ☐ YES ☒ NO If yes, you must also submit a monitoring schedule that is required for your plant.	
Signature: David Shehee	Date: June 10, 2008
Name (print) David Shehee	Phone: 859-335-3660

This notice may be submitted using one of the following options:

- **Through the LT2/Stage 2 Data Collection and Tracking system available at http://www.epa.gov/safewater/disinfection/lt2**
- **As an email attachment and sent to stage2mdbp@epa.gov**
- **By mail or fax to the following:** **LT2ESWTR and Stage 2 DBPR P.O. Box 98Dayton, OH 45401**

  FAX: (937)-586-6557

Long Term 2 Enhanced Surface Water Treatment Rule

Intent to Grandfather – Notice for Kentucky American Water – Northern Division's Thomas Lake

Public Water Systems (PWSs) that will submit grandfathered data for the LT2 Rule must first submit a notice that they intend to submit previously collected monitoring results. This notice must specify the number of previously collected results that the system will submit, the dates of the first and last sample, and whether they will collect additional source water monitoring samples to meet the requirements of the rule. If a PWS plans to collect additional samples, it must also submit a monitoring schedule. Submitting this form satisfies the requirement to submit a notice of intent to grandfather.

Submit this information no later than 3 months prior to the month that the PWS is required to start monitoring.

PWS Information	
PWS Name: Kentucky American Water – Northern Division	PWS ID: KY0940430
PWS Address: 2300 Richmond Road, Lexington, KY 40502	
Email Address: david.shehee@amwater.com	
Water Treatment Plant Name: Kentucky American Water – Northern Division WTP	
Water System Facility ID: 0940430TPA	
Grandfathered Data Information	
Number of previously collected sample results that will be submitted: 24	
Date of first sample: 03/12/07	
Date of last sample: 02/09/09	
Will you be collecting additional source water monitoring samples to meet the requirements of your plant? ☐ YES ☒ NO If yes, you must also submit a monitoring schedule that is required for your plant.	
Signature: David Shehee	Date: June 10, 2008
Name (print) David Shehee	Phone: 859-335-3660

This notice may be submitted using one of the following options:

- **Through the LT2/Stage 2 Data Collection and Tracking system available at http://www.epa.gov/safewater/disinfection/lt2**
- **As an email attachment and sent to stage2mdbp@epa.gov**
- **By mail or fax to the following:**

LT2ESWTR and Stage 2 DBPR
P.O. Box 98Dayton, OH
45401

FAX: (937)-586-6557

Bobby O
RECEIVED 6-18-2011

Historical Inspection

PUBLIC WATER SYSTEM FLUORIDATION ROUTINE INSPECTION

CHS ORAL HEALTH PROGRAM

PWSID#: 0940430
Contact Name: BOBBY OBANION 502 484-9077
Owner Name:
Address: KY AMERICAN WATER CO
Facility Name: TRI-VILLAGE WD
Other Information: KY AMERICAN WATER CO,OWENTON,KY,40359

GENERAL

PWS ID: 0940430
CERTIFICATION #: BOBBY OBANION 20465
WATER SOURCE: Surface Water
FLUORIDATION TYPE: Acid
SERVICE CONNECTIONS: 4000
POPULATION SERVED: 10400
AVG PRODUCTION: 1 MGPD
FLOW RATE (gpm): 780
DESIGN CAPACITY: 1.4 MGPD
Inspector ID: 4
Inspection date: 06/02/11

Items

CHEMICAL TREATMENT:

FLUOROSILIC ACID: X

a) CHEMICAL USED::

CHLORINE: X

ACTIVATED CARBON: X

FERRIC CHLORIDE: X

SULFURIC ACID: X

OTHERS: X

CAUSTIC
POLYMER
SODIUM PERMANGANATE

PLANT SAFETY EQUIPMENT:

b) SYPHON BREAKERS:
RATING: SATISFACTORY

c) VENTILATION:
RATING: SATISFACTORY

d) STORAGE:
RATING: SATISFACTORY

e) METHOD OF MEASUREMENT:
Type Of Measurement: Scales

RATING: SATISFACTORY

OPERATOR SAFETY EQUIPMENTS:

f) RESPIRATOR:
RATING: SATISFACTORY

g) FACE SHEILD:
RATING: SATISFACTORY

h) GLOVES:
RATING: SATISFACTORY

I) APRON:
RATING: SATISFACTORY

LABORATORY AND RECORDS:

j) TESTER:
TESTER BRANDS: HACH ION

RATING: SATISFACTORY

K) ADEQUATE REAGENT SUPPLY:
RATING: SATISFACTORY

l) REAGENT UP TO DATE:
RATING: SATISFACTORY

m) MONTHLY OPERATING REPORTS:
RATING: SATISFACTORY

n) HOUSEKEEPING:
RATING: SATISFACTORY

DISTRIBUTION:

o) MASTER METER:
RATING: SATISFACTORY

p) POINT OF INJECTION:
RATING: SATISFACTORY

q) CHEMICAL FEEDER:
RATING: SATISFACTORY

FEEDER'S BRAND: UNI DOSE

MASTER FLEX

FEEDER SIZE: OK

PERISTOLIC
MASTERFLEX

ON SITE OBSERVATION:

r) FLUORIDE READINGS:
RATING: SATISFACTORY

PRIVATE LABS: State Lab

IN HOUSE
AMERICAN WATER - CENTRAL

(1) SPLIT:
RATING: SATISFACTORY

INSP: 0.91

PLANT: 0.97

Additional Comments: 1

PLANT IN COMPLIANCE ALL YEAR. SAMPLES SENT IN ON TIME.
WELL RUN PLANT.
VERY PROFESSIONAL PLANT.

BOB, MURPHY
DH-35 (5/03)

STEVEN L. BESHEAR
GOVERNOR

LEONARD K. PETERS
SECRETARY

ENERGY AND ENVIRONMENT CABINET
DEPARTMENT FOR ENVIRONMENTAL PROTECTION
Division of Water
8020 Veterans Memorial Dr Ste 110
Florence, KY 41042
www.kentucky.gov

June 30, 2008

KY American Water Co
102 Main Street
Owenton, Kentucky 40359

RE: Owenton Water Plant – 34054
PWSID No. KY0940430 &
Permit No.: KYG640069
Owen County, Kentucky
Activity ID: CIN20080002

Mr. Buchanan:

Attached for your information and records are copies of the inspection reports for the inspections performed at Kentucky American Northern Division on June 25, 2008.

If you have any questions or comments concerning this inspection, please contact the Florence Regional Office at: (859) 525-4923.

Sincerely,

Jeffrey R. Malsi

Jeffrey R. Malsi
Environmental Inspector
Florence Regional Office
Division of Water

JRM
Enclosure:

ENVIRONMENTAL AND PUBLIC PROTECTION CABINET
KENTUCKY DEPARTMENT FOR ENVIRONMENTAL PROTECTION
DIVISION OF WATER

Routine Surface Inspection

Site/Permit ID: KY0940430	Division: **Water**		Regional Office: Florence
Site Name: KY American Water - N. Division		Program: **Drinking Water**	
Site Address: 220 Water Plant Lane			
City: Owenton	State: KY	Zip: 40359	County: Owen
Inspection Type: Routine Surface	Purpose:		Not/Com #:
Inspection Date: 6/25/08	Time: Start 10:35 AM End 4:00 PM		
Latitude:	Longitude:		
Coordinate Collection Method:			Revision Code: 022406

Drinking Water Data

Plant Name: Owenton	Contact Name: Rick Buchanan	
Phone No.:	Fax No:	Email Address:

I. Administrative Requirements

Comments:

I. Compliance Status - No violations observed

II. Operator Certification/Accreditation Requirements

Operator in Charge or on duty.

Operator Name	Plant Certification #	Distribution Certification #
Terry Kincaid	1526	3470

Comments:

II. Compliance Status - No violations observed

III. Record Keeping Requirements

Comments:

III. Compliance Status - No violations observed

IV. Reporting Requirements

Comments:

IV. Compliance Status - No violations observed

V. Operation & Maintenance/Performance Requirements
Plant Type: ☒ C ☐ N ☐ P Service Connections:3053 Population Served:10,075
Average Production MGD: .89 Max. Production MGD: 1.0 Design Capacity MGD: 1.4
Source:Severn Creek

RATING CODES: S1=No Violations Observed; S2=No Violations Obs-but impending viol trends obs; U1=Out of Compliance-No action taken; U2= Out of Comp-LOW non-recurrent Adm. or O & M; U3= Out of Compliance-NOV; NA = Not Applicable; NE = Not Evaluated. **(Add additional comments if U1-U3.)**

	RATING	Equipment / Inspection Data	☐ Checking block means item is present:
CHEMICAL & PHYSICAL TREATMENT	S1	a) Intakes, pumps, piping ☒	# Of Levels1 # Pumps2 Max pump.650
	NA	b) Aeration ☐	
	S1	c) Rapid mix ☒	Type: Mechanical paddle If other:
	S1	d) Flocculation ☒	# of Stages # of Trains Variable Speed
	S1	e) Sedimentation ☒	Type: Up flow # of trains:
	S1	f) Chemical feed coagulation	Ferric/Lime/Polymer
	S1	g) Carbon Feed: ☒	Feed Site1: Rapid mix Feed Site 2:
	S1	h) Filters & controls	Dual Media Filter to Waste ☒
	S1	i) Filters / size sq.ft each./ rate	# 2 Size196 Filtration Rate:700
	S1	j) Automatic analyzers:	Chlorine: ☒ Turbidity: ☒ Each filter: ☒ pH: ☒
	S1	k) Chemical storage:	Dry on pallets? ☐ Chemical containment: ☒
	S1	l) Clearwell / screened vents	Size:50,000 Baffling:☒ Locked ☐ Screened ☐
	S1	m) Pumps # and size in gpm	High Service2 @ 100 Backwash 0 @ 0
SITE DATA	S1	n) Site Data: Owenton	Cl. Free:1.48 Total: 1.77 pH: 7.9 :
	S1	o) Site Data: Wheatley	Cl. Free:0.70 Total: 0.77 pH: 7.43
	S1	p) Site Data: Beechwood	Cl. Free:1.67 Total: 1.94 pH: 7.76
	S2	q) Site Data: Sparta	Cl. Free:0.21 Total: 0.33 pH: 7.70
DISINFECTION	S1	r) Disinfection Pre: ☐ Post: ☒	Pre Type: Post type: Chlorine gas
	S1	s) Automatic chlorinator ☒	Automatic changeover ☒ Proper Fan ☒
	S1	t) Separate room & ventilation	Crash Bar ☒ Alarm ☒
	S1	u) Safety equipment	SCBA ☒ Ammonia ☒ Detector ☒
LABORATORY & RECORDS	S2	v) Laboratory equipment	Adequate Space ☒ Equipment ☐ Lighting : ☐
	S1	(1) Turbidimeter ☒	Type: Hach Last calibrated:
	S1	(2) Adequate reagent supply	☒ Yes ☐ No
	S1	(3) Chlorine Test Kit ☒	Type: Hach DPD DPD reagent up-to-date: ☐ Y ☐ N
	S1	w) Monthly operating reports	☒ Daily Record Sheet ☒ Agreement: ☐
	S1	x) Housekeeping	
DISTRIBUTION	S1	y) Master meter ; Recorder	Raw: ☒ Finished:☒ ; Raw: ☒ Finished: ☒
	S1	z) Blowoffs / hydrants; flushing	Flushing Schedule:☒ Blowoffs on deadends:☒
	S1	aa) Water storage:	# of Tanks 12 Total Storage: 1/959,000
	S1	bb) Booster pumps / chlorinators	Booster pumps: ☒ Booster chlorinators: ☒
PLANT ON SITE OBSERVATION	S1	cc) Plant Data:	Cl free: 1.89 total: 2.18 pH: 7.87 CFE
	S1	dd) Turbidity	Raw: Settled: Combined Filter:0.037
	S1	ee) Bacteriological monitoring	Samples per mo.12 Records: ☒
	S1	ff) No cross-connections observed	None observed: ☒ Observed: ☐ Program: ☐
	S1	gg) Wastewater discharge	KPDES Is sizing adequate? ☒ Yes ☐ N0

Comments: Service connection number was provided by facility. Population served was determined by multiplying service connections by a factor of 3.3. Average and maximum production figures were determined from 2008 MOR data.

Free chlorine testing in Sparta was performed several times over a 15 minute period of time before reaching compliance. Area may need additional flushing to maintain chlorine levels.

Water in Glencoe, KY is provided by KY American who purchases the water from Gallatin County Water. Test results are; Free chlorine residual = 0.68, Total chlorine = 0.71, pH = 7.32.

Several bottles of chemical reagent were found in the laboratory that were past the expiration date. The laboratory had sufficent reagents, that were not expired to perform the required testing. The operator was advised to rotate reagent stocks and monitor chemicals for expiration dates.

V. **Compliance Status** - No violations obs-but impending viol trends obs

VI. Discharge/Emission Compliance

Comments: Facility has a KPDES permit to discharge filter backwash water.

VI. **Compliance Status** - No violations observed

VII. Monitoring/Analyses Evaluation

Comments:

VII. **Compliance Status** - No violations observed

VIII. Environmental /Health Impact

Work Site Hazard Assessment : ☐ ATTACHED ☒ REVIEWED

Comments:

VIII. **Compliance Status** – No violations observed

IX. Documentation

- ☒ Samples taken by DEP
- ☐ Samples taken by outside source
- ☐ Instrument readings taken by DEP regional office
- ☐ Photographs obtained by DEP
- ☒ Copies of records obtained by DEP
- ☐ Other documentation

Inspector: Jeffrey R. Malsi	Title: Environmental Inspector III	Date: 6/25/2008

Signature:

Jeffrey R. Malsi

Overall Compliance Status
☐ No violations observed
☒ No violations observed, but impending violation trends observed
☐ Out of Compliance- No action taken
☐ Out of Compliance LOW non-recurrent administrative or O & M
☐ Out of Compliance - NOV

Comments: Laboratory chemicals need more careful monitoring and the Town of Sparta may need additional flushing.

Delivery Method: Regular Mail	Cert. Mail #:

Environmental and Public Protection Cabinet
Department for Environmental Protection
Division of Water
Wastewater Inspection Report

AI ID: 34054 **AI Type:** WATER-Public Water System (2213)
AI Name: Kentucky American Northern Division
AI Address: 220 Water Plant Dr
City: Owenton, **State:** Kentucky **Zip:** 40359
County: Owen **Regional Office:** Florence Regional Office
Site Contact: Rick Buchanan
Title: Operations Supervisor
Inspection Type: WW CSI-DW Plant KYG64
Activity #: CIN20080002
Inspection Start Date: June 25, 2008 **Time:** 12:15 PM **End Date:** June 25, 2008 **Time:** 12:30 PM
Site/Permit ID: KYG640069

Lead DEP Investigator: Jeff Malsi
Persons Interviewed: Rich Buchanan

General Comments: This facility is a Drinking Water Treatment plant with a permit to discharge filter backwash water. The facility was in compliance with the current permit conditions.
Overall Compliance Status: No Violations Observed

Investigation Results

SI: AIOO34054
SI Description:
Inspector Comment:

SI: GINS1 KPDES Drinking Water
SI Description:
Inspector Comment:

Requirement: Does the facility hold the proper KPDES permit?. [401 KAR 5:055 Section 1]
Compliance Status: No Violations observed
Comment:

Requirement: Are records relating to sampling/analysis, including equipment calibration logs, maintenance records, strip chart recordings, chains of custody, laboratory bench sheets, maintained for a period of at least (3) years?. [401 KAR 5:065 Section 1(10)]
Compliance Status: No Violations observed
Comment:

Requirement: Is discharge being monitored for the parameters specified in the KPDES permit within the required timeframes?Is discharge being monitored at the outfall(s) specified in the permit?. [401 KAR 5:065 Section 1(1)(a)]
Compliance Status: No Violations observed
Comment:

Requirement: Are Discharge Monitoring Reports (DMRs) being submitted by the intervals specified in the KPDES permit?Do the DMRs indicate KPDES Permit violations?. [401 KAR 5:065 Section 1(1)(a)]
Compliance Status: No Violations observed
Comment:

Requirement: Is the facility in compliance with the reporting requirements for spills, bypasses and other releases to the environment?. [401 KAR 5:015 Section 2]
Compliance Status: No Violations observed
Comment:

Requirement: Is the facility being properly operated and maintained as specified in 401 KAR 5:065? This

includes:(a) proper operation and maintenance of all facilities, systems of treatment and control, and related appurtenances which are installed or used by the permittee to achieve compliance with permit conditions;(b) proper operation and maintenance also includes adequate laboratory controls, and appropriate quality assurance procedures;(c) this provision also requires the operation of back-up or auxiliary facilities or similar systems which are installed by a permittee only when the operation is necessary to achieve compliance with the conditions of the permit;(d) is the cleaning frequency of lagoons adequate to ensure compliance with the facility permit?. [401 KAR 5:065 Section 1(5)]
Compliance Status: No Violations observed
Comment:

Requirement: Have pollutants entered the waters of the Commonwealth?. [KRS 224.70-110]
Compliance Status: No Violations observed
Comment:

Requirement: Have surface waters been aesthetically or otherwise degraded?. [401 KAR 5:031 Section 2(1)]
Compliance Status: No Violations observed
Comment:

Requirement: Is the permittee in compliance with the terms of the General KPDES Permit for Wastewater Discharges Associated with Drinking Water Plant Activities?. [401 KAR 5:065 Section 1(1)(a)]
Compliance Status: No Violations observed
Comment:

Documentation

- ☐ **Photos taken**
- ☒ **Documents obtained from facility**
- ☐ **Samples taken by outside source**
- ☐ **Request for Submission of Documents**
- ☐ **Record of visual determination of opacity**
- ☐ **Samples taken by DEP**
- ☐ **Regional office instrument readings taken**
- ☐ **Other documentation**

Inspector: Jeffrey R. Malsi

Date: 6/30/2008

Delivery Method: US Mail

Steven L. Beshear
Governor

Leonard K. Peters
Secretary
Energy and Environment Cabinet

Commonwealth of Kentucky
Public Service Commission
211 Sower Blvd.
P.O. Box 615
Frankfort, Kentucky 40602-0615
Telephone: (502) 564-3940
Fax: (502) 564-3460
psc.ky.gov

David L. Armstrong
Chairman

James W. Gardner
Vice Chairman

Charles R. Borders
Commissioner

July 25, 2011

Mr. Kevin Kruchinski, Manager
Kentucky-American Water Company Northern Division
102 North Main Street
Owenton, KY 40359

Ms. Cheryl Norton, President
Kentucky-American Water Company Northern Division
102 North Main Street
Owenton, KY 40359

PERIODIC REGULATORY COMPLIANCE WATER UTILITY INSPECTION

On July 20, 2011, Commission Staff Member Jimmy Adcock inspected the facilities and records of Kentucky-American Water Company Northern Division. A copy of the report of this inspection is enclosed.

Based on Mr. Adcock's findings, no deficiencies are noted during this inspection. The previous inspection was conducted on May 26, 2010 and no deficiencies were noted then.

If you have any questions or wish further assistance, please contact me at (502) 564-3940, extension 409. We appreciate your continued interest in the safe operation of your utility.

GEORGE W. WAKIM, P.E., MANAGER
WATER & SEWER BRANCH, ENGINEERING DIVISION

Attachment: KAWCND-072011 Inspection Report
C: Ms. Julie Roney, DOW, EEC

COMMONWEALTH OF KENTUCKY

PUBLIC SERVICE COMMISSION

UTILITY INSPECTION REPORT

Report Date: 7/22/2011

Report Number: KAWCND-072011

BRIEF

Inspector:	Jim R. Adcock
Inspection Date:	July 20, 2011
Type of Inspection:	Periodic Regulatory Compliance Inspection
Type of Facility:	Purchaser and Distribution Facility
Name of Utility:	Kentucky-American Water Company Northern Division
Location of Facility:	102 North Main Street, Owenton, KY 40359 Attention: Kevin Kruchinski, Operations Superintendent
Purpose of Inspection:	Periodic inspection of utility facilities operation and maintenance practices to verify compliance with PSC regulations
Applicable Regulations:	KRS Chapter 278 and 807 KAR Chapter 5

INSPECTION

Description of Utility:	Water treatment plant with a capacity of 1.44 million gallons
Number of Customers:	3,859
Area of Operation:	Gallatin, Grant, and Owen Counties
Supply Source:	Severn Creek and Thomas Lake (purchase from city of Georgetown, Carroll County Water District, and Gallatin County)
Distribution Description:	Average daily consumption of 752,460 gallons; 250 miles of distribution line (PVC, AC, and DI); total storage capacity of 1,157,000 gallons
Workforce Summary:	15 employees
Utility Reps in Insp:	Kevin Kruchinski, Operations Superintendent; Linda Bridwell, PE, Manager of Project Delivery Water Supply; Michael Moler, Manager of Production; and David Shehee, Supervisor, Water Quality and Environmental Compliance
Date of Last Inspection:	May 26, 2010
DTR from Last Insp:	0
DTRs not Cleared:	0

Summary of items and facilities Inspected:
Records including, but not limited to, pressure charts; meter testing, reading and history; flushing; service interruptions; complaints; facilities inspections and procedures; operation and maintenance manual; facilities maintenance; safety guidelines; a copy of a water shortage response plan; and the service area map, etc.; Perry Street tank (100,000 gal.); and the Fairgrounds tank (400,000 gal.). During this periodic regulatory compliance inspection, it was not possible to review every record relating to all Commission requirements. Therefore, in some instances the results contained in this report are indicative of those items inspected and reviewed on a sample basis.

COMMONWEALTH OF KENTUCKY

PUBLIC SERVICE COMMISSION

UTILITY INSPECTION REPORT

Report Date: 7/22/2011

Report Number: KAWCND-072011

FINDINGS

RECOMMENDATIONS

Pursuant to its water sales contract with Georgetown Municipal Water & Sewer Service (seller), the district (purchaser) should request Georgetown Municipal Water & Sewer Service to test or calibrate the four-inch Rockdale and the three-inch Leaning Oak master meters that are owned by Georgetown Municipal Water & Sewer Service. Kentucky-American Water Company Northern Division is unaware of how long it has been since the master meters were tested.

ADDITIONAL INSPECTOR COMMENTS

Kentucky-American Water Company Northern Division (KAWCND) is part of Kentucky-American Water Company. Customers in the Northern Division area were formerly served by Tri-Village Water District, Elk Lake Shores Subdivision, and the City of Owenton.

The Northern Division (3,859 connections) and the Central Division (Kentucky-American Water –116,616 connections) are not physically connected; however management explained that the only percentage of water loss that could be provided was consolidated with the Central Division. Therefore, Kentucky-American Water Company reported to the Public Service Commission a 10.89 percent water loss on their 2010 annual report.

KAWCND has radio read meters in its system for all their customers. The utility has been working on a GPS mapping system for its valves and fire hydrants.

Rick Buchanan, Operations Supervisor; and Carol Tudor, Senior Specialist, have retired from the utility. Kevin Kruchinski is the district's new Operations Superintendent.

For the second consecutive year, KAWCND received the U. S. Environmental Protection Agency's Area-Wide Optimization Program award for 2010 from the Kentucky Energy and Environment Cabinet. This distinction recognizes facilities that reduce the amount of turbidity (or cloudiness) in the water to levels well below what is required by state and federal regulations. Because bacteria and viruses can attach themselves to dirt, the primary source of turbidity in water, the removal of particles, is a critical component of protecting consumers from waterborne diseases.

A periodic regulatory compliance inspection will be conducted within a year.

Submitted by

Jim R. Adcock

Jim R. Adcock
Utility Regulatory and Safety Investigator III

STEVEN L. BESHEAR
GOVERNOR

LEONARD K. PETERS
SECRETARY

ENERGY AND ENVIRONMENT CABINET
DEPARTMENT FOR ENVIRONMENTAL PROTECTION
Division of Water
8020 Veterans Memorial Dr Ste 110
Florence, KY 41042
www.kentucky.gov

June 30, 2008

KY American Water Co
102 Main Street
Owenton, Kentucky 40359

RE: Owenton Water Plant – 34054
PWSID No. KY0940430 &
Permit No.: KYG640069
Owen County, Kentucky
Activity ID: CIN20080002

Mr. Buchanan:

Attached for your information and records are copies of the inspection reports for the inspections performed at Kentucky American Northern Division on June 25, 2008.

If you have any questions or comments concerning this inspection, please contact the Florence Regional Office at: (859) 525-4923.

Sincerely,

Jeffrey R. Malsi

Jeffrey R. Malsi
Environmental Inspector
Florence Regional Office
Division of Water

JRM
Enclosure:

ENVIRONMENTAL AND PUBLIC PROTECTION CABINET
KENTUCKY DEPARTMENT FOR ENVIRONMENTAL PROTECTION
DIVISION OF WATER
Routine Surface Inspection

Site/Permit ID: KY0940430	Division: **Water**		Regional Office: Florence
Site Name: KY American Water - N. Division		Program: **Drinking Water**	
Site Address: 220 Water Plant Lane			
City: Owenton	State: KY	Zip: 40359	County: Owen
Inspection Type: Routine Surface	Purpose:		Not/Com #:
Inspection Date: 6/25/08	Time: Start 10:35 AM End 4:00 PM		
Latitude:	Longitude:		
Coordinate Collection Method:			Revision Code: 022406

Drinking Water Data

Plant Name: Owenton	Contact Name: Rick Buchanan	
Phone No.:	Fax No:	Email Address:

I. Administrative Requirements

Comments:

I. Compliance Status - No violations observed

II. Operator Certification/Accreditation Requirements

Operator in Charge or on duty.

Operator Name	Plant Certification #	Distribution Certification #
Terry Kincaid	1526	3470

Comments:

II. Compliance Status - No violations observed

III. Record Keeping Requirements

Comments:

III. Compliance Status - No violations observed

IV. Reporting Requirements

Comments:

IV. Compliance Status - No violations observed

Called Jeff Mals to correct to 8,181.

V. Operation & Maintenance/Performance Requirements
Plant Type: ☒ C ☐ N ☐ P Service Connections:3053 Population Served:10,075
Average Production MGD: .89 Max. Production MGD: 1.0 Design Capacity MGD: 1.4
Source:Severn Creek

RATING CODES: S1=No Violations Observed; S2=No Violations Obs-but impending viol trends obs; U1=Out of Compliance-No action taken; U2= Out of Comp-LOW non-recurrent Adm. or O & M; U3= Out of Compliance-NOV; NA = Not Applicable; NE = Not Evaluated. **(Add additional comments if U1-U3.)**

	RATING	Equipment / Inspection Data	☐ Checking block means item is present:
CHEMICAL & PHYSICAL TREATMENT	S1	a) Intakes, pumps, piping ☒	# Of Levels1 # Pumps2 Max pump.650
	NA	b) Aeration ☐	
	S1	c) Rapid mix ☒	Type: Mechanical paddle If other:
	S1	d) Flocculation ☒	# of Stages # of Trains Variable Speed
	S1	e) Sedimentation ☒	Type: Up flow # of trains:
	S1	f) Chemical feed coagulation	Ferric/Lime/Polymer
	S1	g) Carbon Feed: ☒	Feed Site1: Rapid mix Feed Site 2:
	S1	h) Filters & controls	Dual Media Filter to Waste ☒
	S1	i) Filters / size sq.ft each./ rate	# 2 Size196 Filtration Rate:700
	S1	j) Automatic analyzers:	Chlorine: ☒ Turbidity: ☒ Each filter: ☒ pH: ☒
	S1	k) Chemical storage:	Dry on pallets? ☐ Chemical containment: ☒
	S1	l) Clearwell / screened vents	Size:50,000 Baffling:☒ Locked ☐ Screened ☐
	S1	m) Pumps # and size in gpm	High Service2 @ 100 Backwash 0 @ 0
SITE DATA	S1	n) Site Data: Owenton	Cl. Free:1.48 Total: 1.77 pH: 7.9 :
	S1	o) Site Data: Wheatley	Cl. Free:0.70 Total: 0.77 pH: 7.43
	S1	p) Site Data: Beechwood	Cl. Free:1.67 Total: 1.94 pH: 7.76
	S2	q) Site Data: Sparta	Cl. Free:0.21 Total: 0.33 pH: 7.70
DISINFECTION	S1	r) Disinfection Pre: ☐ Post: ☒	Pre Type: Post type: Chlorine gas
	S1	s) Automatic chlorinator ☒	Automatic changeover ☒ Proper Fan ☒
	S1	t) Separate room & ventilation	Crash Bar ☒ Alarm ☒
	S1	u) Safety equipment	SCBA ☒ Ammonia ☒ Detector ☒
LABORATORY & RECORDS	S2	v) Laboratory equipment	Adequate Space ☒ Equipment ☐ Lighting : ☐
	S1	(1) Turbidimeter ☒	Type: Hach Last calibrated:
	S1	(2) Adequate reagent supply	☒ Yes ☐ No
	S1	(3) Chlorine Test Kit ☒	Type: Hach DPD DPD reagent up-to-date: ☐ Y ☐ N
	S1	w) Monthly operating reports	☒ Daily Record Sheet ☒ Agreement: ☐
	S1	x) Housekeeping	
DISTRIBUTION	S1	y) Master meter ; Recorder	Raw: ☒ Finished:☒ ; Raw: ☒ Finished: ☒
	S1	z) Blowoffs / hydrants; flushing	Flushing Schedule:☒ Blowoffs on deadends:☒
	S1	aa) Water storage:	# of Tanks 12 Total Storage: 1/959,000
	S1	bb) Booster pumps / chlorinators	Booster pumps: ☒ Booster chlorinators: ☒
PLANT ON SITE OBSERVATION	S1	cc) Plant Data:	Cl free: 1.89 total: 2.18 pH: 7.87 CFE
	S1	dd) Turbidity	Raw: Settled: Combined Filter:0.037
	S1	ee) Bacteriological monitoring	Samples per mo.12 Records: ☒
	S1	ff) No cross-connections observed	None observed: ☒ Observed: ☐ Program: ☐
	S1	gg) Wastewater discharge	KPDES Is sizing adequate? ☒ Yes ☐ N0

Comments: Service connection number was provided by facility. Population served was determined by multiplying service connections by a factor of 3.3. Average and maximum production figures were determined from 2008 MOR data.

Free chlorine testing in Sparta was performed several times over a 15 minute period of time before reaching compliance. Area may need additional flushing to maintain chlorine levels. > tank turnover?

Water in Glencoe, KY is provided by KY American who purchases the water from Gallatin County Water. Test results are; Free chlorine residual = 0.68, Total chlorine = 0.71, pH = 7.32.

Several bottles of chemical reagent were found in the laboratory that were past the expiration date. The laboratory had sufficent reagents, that were not expired to perform the required testing. The operator was advised to rotate reagent stocks and monitor chemicals for expiration dates. > corrected

V. Compliance Status - No violations obs-but impending viol trends obs

VI. Discharge/Emission Compliance

Comments: Facility has a KPDES permit to discharge filter backwash water.

VI. Compliance Status - No violations observed

VII. Monitoring/Analyses Evaluation

Comments:

VII. Compliance Status - No violations observed

VIII. Environmental /Health Impact

Work Site Hazard Assessment : ☐ ATTACHED ☒ REVIEWED

Comments:

VIII. Compliance Status – No violations observed

IX. Documentation

- ☒ Samples taken by DEP
- ☐ Samples taken by outside source
- ☐ Instrument readings taken by DEP regional office
- ☐ Photographs obtained by DEP
- ☒ Copies of records obtained by DEP
- ☐ Other documentation

Inspector: Jeffrey R. Malsi	Title: Environmental Inspector III	Date: 6/25/2008

Signature:

Jeffrey R. Malsi

Overall Compliance Status
☐ No violations observed
☒ No violations observed, but impending violation trends observed
☐ Out of Compliance- No action taken
☐ Out of Compliance LOW non-recurrent administrative or O & M
☐ Out of Compliance - NOV

Comments: Laboratory chemicals need more careful monitoring and the Town of Sparta may need additional flushing.

Delivery Method: Regular Mail	Cert. Mail #:

Environmental and Public Protection Cabinet
Department for Environmental Protection
Division of Water
Wastewater Inspection Report

AI ID: 34054 **AI Type:** WATER-Public Water System (2213)
AI Name: Kentucky American Northern Division
AI Address: 220 Water Plant Dr
City: Owenton, **State:** Kentucky **Zip:** 40359
County: Owen **Regional Office:** Florence Regional Office
Site Contact: Rick Buchanan
Title: Operations Supervisor
Inspection Type: WW CSI-DW Plant KYG64
Activity #: CIN20080002
Inspection Start Date: June 25, 2008 **Time:** 12:15 PM **End Date:** June 25, 2008 **Time:** 12:30 PM
Site/Permit ID: KYG640069

Lead DEP Investigator: Jeff Malsi
Persons Interviewed: Rich Buchanan

General Comments: This facility is a Drinking Water Treatment plant with a permit to discharge filter backwash water. The facility was in compliance with the current permit conditions.
Overall Compliance Status: No Violations Observed

Investigation Results

SI: AIOO34054
SI Description:
Inspector Comment:

SI: GINS1 KPDES Drinking Water
SI Description:
Inspector Comment:

Requirement: Does the facility hold the proper KPDES permit?. [401 KAR 5:055 Section 1]
Compliance Status: No Violations observed
Comment:

Requirement: Are records relating to sampling/analysis, including equipment calibration logs, maintenance records, strip chart recordings, chains of custody, laboratory bench sheets, maintained for a period of at least (3) years?. [401 KAR 5:065 Section 1(10)]
Compliance Status: No Violations observed
Comment:

Requirement: Is discharge being monitored for the parameters specified in the KPDES permit within the required timeframes?Is discharge being monitored at the outfall(s) specified in the permit?. [401 KAR 5:065 Section 1(1)(a)]
Compliance Status: No Violations observed
Comment:

Requirement: Are Discharge Monitoring Reports (DMRs) being submitted by the intervals specified in the KPDES permit?Do the DMRs indicate KPDES Permit violations?. [401 KAR 5:065 Section 1(1)(a)]
Compliance Status: No Violations observed
Comment:

Requirement: Is the facility in compliance with the reporting requirements for spills, bypasses and other releases to the environment?. [401 KAR 5:015 Section 2]
Compliance Status: No Violations observed
Comment:

Requirement: Is the facility being properly operated and maintained as specified in 401 KAR 5:065? This

includes:(a) proper operation and maintenance of all facilities, systems of treatment and control, and related appurtenances which are installed or used by the permittee to achieve compliance with permit conditions;(b) proper operation and maintenance also includes adequate laboratory controls, and appropriate quality assurance procedures;(c) this provision also requires the operation of back-up or auxiliary facilities or similar systems which are installed by a permittee only when the operation is necessary to achieve compliance with the conditions of the permit;(d) is the cleaning frequency of lagoons adequate to ensure compliance with the facility permit?. [401 KAR 5:065 Section 1(5)]
Compliance Status: No Violations observed
Comment:

Requirement: Have pollutants entered the waters of the Commonwealth?. [KRS 224.70-110]
Compliance Status: No Violations observed
Comment:

Requirement: Have surface waters been aesthetically or otherwise degraded?. [401 KAR 5:031 Section 2(1)]
Compliance Status: No Violations observed
Comment:

Requirement: Is the permittee in compliance with the terms of the General KPDES Permit for Wastewater Discharges Associated with Drinking Water Plant Activities?. [401 KAR 5:065 Section 1(1)(a)]
Compliance Status: No Violations observed
Comment:

Documentation

- ☐ Photos taken
- ☒ Documents obtained from facility
- ☐ Samples taken by outside source
- ☐ Request for Submission of Documents
- ☐ Record of visual determination of opacity
- ☐ Samples taken by DEP
- ☐ Regional office instrument readings taken
- ☐ Other documentation

Inspector: Jeffrey R. Malsi

Date: 6/30/2008

Delivery Method: US Mail

ENVIRONMENTAL AND PUBLIC PROTECTION CABINET
DEPARTMENT FOR ENVIRONMENTAL PROTECTION

Ernie Fletcher
Governor

Division of Water
14 Reilly Road
Frankfort, Kentucky 40601-1190
www.kentucky.gov

LaJuana S. Wilcher
Secretary

February 17, 2006

Mr. David Shehee
Owenton Water Treatment Plant
c/o Kentucky-American Water Company
6300 Cedar Creek Lane
Lexington, Kentucky 40515

RE: PWSID #0940430
Chemical Change

Dear Mr. Shehee:

This is to authorize the Owenton water treatment plant's use of the Brenntag 38% sulfuric acid for pH adjustment. The product is NSF-approved to a maximum dosage of 121 mg/L. It is recommended that the caustic feed point after the Claricone be located such to provide sufficient mix time in order to raise the pH to precipitate out the manganese prior to filtration.

If you have any questions, I can be reached at 502/564-2225, extension535.

Sincerely,

Julie W. Roney

Julie W. Roney, Supervisor
Technical Assistance and Outreach
Drinking Water Branch
Division of Water

C: Florence Regional Office
Drinking Water Files

ENVIRONMENTAL AND PUBLIC PROTECTION CABINET
DEPARTMENT FOR ENVIRONMENTAL PROTECTION

Ernie Fletcher
Governor

Division of Water
14 Reilly Road
Frankfort, Kentucky 40601-1190
www.kentucky.gov

Teresa J. Hill
Secretary

November 20, 2007

Mr. David Shehee
Kentucky-American Water/Northern Division
6300 Cedar Creek Road
Lexington, Kentucky 40515

RE: PWSID# KY0940430
Disinfection Change Monitoring

Dear Mr. Shehee:

The Drinking Water Branch (DWB) has received Kentucky-American/Northern Division's request to evaluate the current heterotrophic plate count (HPC) monitoring that occurs due to the pre-chlorination point change from the rapid mix to the top of the filters. Monitoring now occurs quarterly.

The DWB agrees that the Kentucky-American/Northern Division's results continue to show little to no HPC growth through the filters. However, the guidance for a change in pre-chlorination includes HPC monitoring at a frequency that indicates little to no biological growth in the filters and adequate inactivation credit (C-T). As long as a water plant continues to provide disinfection at the top of the filters only for pre-chlorination, HPC monitoring will continue with the least frequent schedule being quarterly.

If you have any questions, contact Don DeKoster at 502/429-7122.

Sincerely,

Julie W. Roney

Julie W. Roney, Supervisor
Technical Assistance and Outreach
Drinking Water Branch
Division of Water

November 19, 2007

Mr. David Shehee
KAWC/Northern Division
6300 Cedar Creek Lane
Lexington, Kentucky 40515

RE: PWSID #0940430
Chemical Change

Dear Mr. Shehee:

This is to authorize the KAWC/Northern Division water treatment plant's use of the Nalco polyDADMAC polymer Catfloc LS as a filtration aid. The product is NSF-approved to a maximum dosage of 100 mg/L.

If you have any questions, I can be reached at 502/564-8158, extension 535.

Sincerely,

E-Signed by Roney, Julie
VERIFY authenticity with ApproveIt
Julie W. Roney

Julie W. Roney, Supervisor
Technical Assistance and Outreach
Drinking Water Branch
Division of Water

ENVIRONMENTAL AND PUBLIC PROTECTION CABINET
DEPARTMENT FOR ENVIRONMENTAL PROTECTION

Ernie Fletcher
Governor

Division of Water
14 Reilly Road
Frankfort, Kentucky 40601-1190
www.kentucky.gov

Teresa J. Hill
Secretary

November 9, 2007

Mr. David Shehee
KAWC/Northern Division
6300 Cedar Creek Lane
Lexington, Kentucky 40515

RE: PWSID #0940430
Chemical Change

Dear Mr. Shehee: LS

This is to authorize the KAWC/Northern Division water treatment plant's use of the Nalco polyDADMAC polymer Catfloc TL as a filtration aid. The product is NSF-approved to a maximum dosage of 50 mg/L.

If you have any questions, I can be reached at 502/564-8158, extension 535.

Sincerely,

Julie W. Roney

Julie W. Roney, Supervisor
Technical Assistance and Outreach
Drinking Water Branch
Division of Water

ERNIE FLETCHER
GOVERNOR

ENVIRONMENTAL AND PUBLIC PROTECTION CABINET
DEPARTMENT FOR ENVIRONMENTAL PROTECTION
DIVISION OF WATER
14 REILLY ROAD
FRANKFORT, KENTUCKY 40601
www.kentucky.gov

TERESA J. HILL
SECRETARY

January 8, 2007

Mr. David Shehee
Kentucky-American Water Company
6300 Cedar Creek Lane
Lexington, Kentucky 40515

RE: PWSID #KY0940430
Proposed Disinfection Change

Dear Mr. Shehee:

The Drinking Water Branch (DWB) has received Kentucky-American/Northern Division's request to begin the application of chloramines as a post-disinfectant. The proposal was made on the behalf of the Northern Division by Strand Associates. The following was submitted: 12 months of C-T data, a description of the chemical feed points and a description of impact of changing post-disinfectants.

The 12 months of C-T data was used to calculate a disinfection benchmark. Any proposed changes in disinfection are not to lower C-Ts below this mark. The benchmark was set in November 2005 with a monthly average of 1.64 log inactivation. As the ammonia is to be applied to the suction side of the high service pumps, after the 2 clearwells, no impact will be seen on C-T inactivation.

The DWB **approves** the application of chloramines at the Northern Division water treatment plant as proposed with the following stipulations:

1. The Northern Division shall follow the attached "Protocol—Use of Chloramines for Disinfection".
2. Install a downstream on-line chlorine/chloramine analyzer to assist in optimizing chloramine speciation.
3. Pursuant to the Minor Revisions to the Lead and Copper Rule (LCR) Section 141.86(d)(vii), any water system subject to reduced monitoring that changes any water treatment shall inform the state of such. In addition, the State may require the water system to resume standard LCR monitoring, increase water quality parameter sampling or re-evaluate its corrosion control treatment

given the proposed changes in water quality. As recent studies have indicated a potential link between the application of chloramines and elevated blood levels in children, the Northern Division shall resume standard LCR monitoring 6 months after chloramination has begun.

a. Standard monitoring for lead and copper for the Northern Division shall be 40 samples in each of two consecutive six-month monitoring periods. With the merger of Tri-Village Water District and the city of Owenton and the combining of the LCR sites from each water system, it is also required that the Northern Division submit a new LCR sampling plan. This plan should be submitted to the DWB to the attention of Todd Ritter. Following the two six-month periods, the Northern Division may apply for reduced monitoring.
b. In addition, water quality samples shall be collected twice at three sites during each of the six-month monitoring periods. Water quality parameters shall include total chlorine residual, ammonia, in addition to pH, alkalinity, calcium, conductivity and water temperature. Following the two six-month periods, water quality parameters will be set for the Northern Division.

4. Notify both the DWB and the Florence Regional Office upon start-up of the chloramine application. If the application is to be seasonal, notification to the same should be provided when application is stopped.

If you have any questions, please contact either Don DeKoster at 502/429-7122 or Julie W. Roney at 502/564-2225, extension 535.

Sincerely,

Donna S. Marlin, Manager
Drinking Water Branch
Division of Water

C: Florence Regional Office
Drinking Water Files

KENTUCKY DIVISION OF WATER

PROTOCOL

Use of Chloramines for Disinfection

The use of chloramination has been shown to reduce the formation of disinfection by-products (DBP) in water distribution systems and increase chlorine residual stability. Since 1998, the various DBP regulatory packages have lowered by-product maximum contaminant levels, added new contaminants and proposed individual monitoring site compliance. Chloramination is one means of meeting these more stringent requirements.

The following is the protocol adopted by the Kentucky Division of Water's Drinking Water Branch (DWB) for those systems considering a change to chloramination.

Education

- Both the public and water system personnel shall be educated on the use and consequences of chloramination.

- Water system personnel shall receive training on the safe handling of a new, potentially hazardous chemical, including chemical reactions, personal protective equipment, unloading procedures, leak detection and spill/leak response. In addition, training on new feed equipment, process control procedures (testing) and disposal of chloraminated waters will be necessary. Both water treatment and distribution personnel should be involved in this training.

- The public education campaign should begin at least 6 months prior to start-up. The public includes the affected water system customers as well as any public water systems to which water is sold or from which water is bought. Various types of media should be used—television, radio, newspaper, direct billing, pamphlets, etc. Typically the written information is in a "Question and Answer" format and should provide information on any changes in perceived water quality (such as tastes or odors), why the change is occurring and how to contact the system for further information. Meetings with consecutive systems to discuss the disinfection change and any water quality issues (including the blending of waters with different disinfectants) are advised.

- There are segments of the public that are more susceptible to chloramination, primarily due to the possible presence of free ammonia in the finished water. These segments include:

Dialysis clinics	Pet and fish stores
Hospitals	Restaurants with live fish
Doctors	Aquaculture facilities
Schools/Universities	Manufacturing facilities
Medial laboratories	Commercial laboratories

More detailed information can be provided to these groups.

Examples of educational materials can be found in the American Water Works Association Research Foundation (AWWARF) publication entitled Optimizing Chloramine Treatment (1993) or from utilities currently practicing chloramination.

Design

- Chloramines can be formed in various ways within the water treatment plant. Due to concerns with meeting disinfection C-Ts, the DWB is highly recommending post-chloramination instead of pre-chloramination or the use of pre-formed chloramines. This would involve adding chlorine in the process before ammonia. There is also the concern that chloramines are a proven weaker disinfectant and may not be sufficient to function as the primary disinfectant.

- Post-chloramination can be accomplished either in the clearwell or by feeding the ammonia after the high service pumps. It is advisable to feed the chlorine a sufficient distance prior to the ammonia to improve mixing and provide a process control or monitoring point. The ammonia should also be added in such a way to obtain adequate mixing and thus facilitate the reaction between the 2 chemicals.

- Ammoniated feed water is corrosive to most metals and some elastomeric products. Therefore the feed equipment, piping and joint material shall be compatible with ammonia.

- There are 3 forms of ammonia commonly used in water treatment: anhydrous, aqueous and ammonium sulfate. Each form has unique safety and design issues. These should be addressed with the consulting engineering firm. Information on the anhydrous ammonia feed systems can be found in the American National Standard Safety Requirements for the Storage and Handling of Anhydrous Ammonia (CGA G2.1) from the American National Standard Institute. The Compressed Gas Association is another good resource of information on gaseous ammonia. Manufacturers of aqueous ammonia and ammonia sulfate can provide Material Safety Data Sheets, product information and feed requirements.

- Safety is a primary issue when feeding ammonia, particularly anhydrous forms. The Environmental Protection Agency (EPA) considers anhydrous ammonia an extremely hazardous substance in that it can very quickly cause permanent injury or death. The appropriate leak detection and personal protective equipment should be made available for the selected form of ammonia.

- The design of ammonia feed systems should also take into account the environmental concerns associated with ammonia. Ammonia is toxic to fish: therefore, chloraminated water should not be discharged into any body of water. Leaks or releases of product can be detrimental to equipment and structures.

- The blending of chloraminated and non-chloraminated (free chlorine) waters within the distribution system is discouraged. Blending of the 2 waters can result in the loss of or very low chlorine residuals. This is due to the free chlorine pushing the chloraminated water near or to the point of breakpoint chlorination.

Process Control and Monitoring

Process control and monitoring are applicable to both the water treatment plant and the distribution system.

Water Treatment Plant

- Within the water treatment plant, a monitoring scheme shall be established to assure that the chloramination process is complete and within set water quality goals. In-plant testing should include:

Raw Water:	pH, free ammonia
Prior to Ammoniation:	pH, free chlorine, total chlorine, free ammonia, temperature, flow
Post-ammoniation: (typically done at the plant tap)	pH, free chlorine, total chlorine, free ammonia, temperature, chloramine speciation

- This testing should be done at least once a shift. pH and chlorine residuals can be done more frequently.

- Once a month the plant tap should be monitored for nitrites. This should be done at least weekly in warm water conditions (temperatures above 12 degrees C).

- Feed rates should be verified at least daily and any time there is a change in plant flow rates. Bulk chemical volumes should be monitored daily to verify usage and assist in ordering.

Distribution System

- Due to concerns with nitrification and chloramine decay with in the distribution system, a monitoring scheme shall be developed and implemented at the onset of chloramination. It is advisable to conduct at least one round of monitoring prior to chloramination in order to establish a baseline.

- Monitoring points shall include tanks and low flow areas, at a minimum. The water quality parameters shall include total chlorine, free chlorine, free ammonia, nitrite, nitrate (only if nitrite is detected), pH, temperature, total coliform and heterotrophic plate count (HPC) bacteria. If there is significant free chlorine residual, a chloramines speciation should be done. The monitoring is to be conducted at least monthly, with more frequent monitoring in the warm water months.

- A decrease or loss of total chlorine residual, coupled with a decrease in free ammonia and increases in nitrite and HPC, indicates nitrification. Nitrification occurs in dark environments that contain warm, stagnant (low flow) water. Typically this occurs in water storage tanks that have low turnover rates or low demand. Nitrification can also occur in distribution mains in areas of low flow and/or demand such as rural areas or areas just under development. Nitrification can be controlled by flushing, shock chlorination of the affected tank or area, a return to free chlorination at the water plant and controlling ammonia and pH levels in the distributed water.

- Prior to conducting any system-wide distribution flushing, the water system should return to free chlorination to avoid the disposal issues of chloraminated waters as well as to "shock" the system with a more potent disinfectant. Chloramines have been shown to be effective against biofilm bacteria. When flushing, however, the biofilm is scoured, freeing the bacteria into the

water column. Free chlorine can then more readily provide the necessary disinfection. Customers, including consecutive systems, should be notified of the change in disinfection. It is recommended that the system remain on free chlorine for at least 2 weeks or for 1 week before and after the actual flushing.

- Both the water quality monitoring scheme for the water treatment plant and the distribution system shall be provided to the DWB for review prior to beginning chloramination.

Research

Changes in Blood Lead Levels Associated with Use of Chloramines in Water Treatment Systems

Marie Lynn Miranda, Dohyeong Kim, Andrew P. Hull, Christopher J. Paul, and M. Alicia Overstreet Galeano

Nicholas School of the Environment and Earth Sciences, Duke University, Durham, North Carolina, USA

Abstract

Background: More municipal water treatment plants are using chloramines as a disinfectant in order to reduce carcinogenic by-products. In some instances, this has coincided with an increase in lead levels in drinking water in those systems. Lead in drinking water can be a significant health risk.

Objectives: We sought to test the potential effect of switching to chloramines for disinfection in water treatment systems on childhood blood lead levels using data from Wayne County, located in the central Coastal Plain of North Carolina.

Methods: We constructed a unified geographic information system (GIS) that links blood lead screening data with age of housing, drinking water source, and census data for 7,270 records. The data were analyzed using both exploratory methods and more formal multivariate techniques.

Results: The analysis indicates that the change to chloramine disinfection may lead to an increase in blood lead levels, the impact of which is progressively mitigated in newer housing.

Conclusions: Introducing chloramines to reduce carcinogenic by-products may increase exposure to lead in drinking water. Our research provides guidance on adjustments in the local childhood lead poisoning prevention program that should accompany changes in water treatment. As similar research is conducted in other areas, and the underlying environmental chemistry is clarified, water treatment strategies can be optimized across the multiple objectives that municipalities face in providing high quality drinking water to local residents.

Key words: blood lead levels, chloramines, GIS, lead risk, water quality. *Environ Health Perspect* 115:221–225 (2007) . doi:10.1289/ehp.9432 available via *http://dx.doi.org/* [Online 7 November 2006]

Address correspondence to M.L. Miranda, Nicholas School of the Environment and Earth Sciences, Duke University, Box 90328, Levine Science Research Center Room A134, Durham, NC 27708 USA. Telephone: (919) 613-8023. Fax: (919) 684-3227. E-mail: mmiranda@duke.edu

We thank A. Bauer, J. Davis, S. Edwards, E. Norman, and T. Ward for their work on this project. We also thank the Wayne County GIS Department for facilitating this analysis by providing access to tax parcel and water district shapefiles.

This research was made possible by funding from the Centers for Disease Control and Prevention (through a subcontract with the North Carolina Department of Environment and Natural Resources) and the National Institute of Environmental Health Sciences Superfund Basic Research Program (3 P42 ES010356-07) .

The authors declare they have no competing financial interests.

Received 18 June 2006 ; accepted 7 November 2006.

The full version of this article is available for free in HTML or PDF formats.

Changes in Blood Lead Levels Associated with Use of Chloramines in Water Treatment Systems

Marie Lynn Miranda, Dohyeong Kim, Andrew P. Hull, Christopher J. Paul, and M. Alicia Overstreet Galeano

Nicholas School of the Environment and Earth Sciences, Duke University, Durham, North Carolina, USA

BACKGROUND: More municipal water treatment plants are using chloramines as a disinfectant in order to reduce carcinogenic by-products. In some instances, this has coincided with an increase in lead levels in drinking water in those systems. Lead in drinking water can be a significant health risk.

OBJECTIVES: We sought to test the potential effect of switching to chloramines for disinfection in water treatment systems on childhood blood lead levels using data from Wayne County, located in the central Coastal Plain of North Carolina.

METHODS: We constructed a unified geographic information system (GIS) that links blood lead screening data with age of housing, drinking water source, and census data for 7,270 records. The data were analyzed using both exploratory methods and more formal multivariate techniques.

RESULTS: The analysis indicates that the change to chloramine disinfection may lead to an increase in blood lead levels, the impact of which is progressively mitigated in newer housing.

CONCLUSIONS: Introducing chloramines to reduce carcinogenic by-products may increase exposure to lead in drinking water. Our research provides guidance on adjustments in the local childhood lead poisoning prevention program that should accompany changes in water treatment. As similar research is conducted in other areas, and the underlying environmental chemistry is clarified, water treatment strategies can be optimized across the multiple objectives that municipalities face in providing high quality drinking water to local residents.

KEY WORDS: blood lead levels, chloramines, GIS, lead risk, water quality. *Environ Health Perspect* 115:221–225 (2007). doi:10.1289/ehp.9432 available via *http://dx.doi.org/* [Online 7 November 2006]

Exposure to lead has long been recognized as hazardous to human health (Pueschel et al. 1996). Until the 1970s, concerns about lead poisoning primarily focused on acute exposures resulting in convulsions, paralysis, anemia, and gastrointestinal problems (International Program on Chemical Safety 1995). There is now recognition of significant asymptomatic health effects at levels much lower than those previously considered safe, particularly for children (Bellinger 1995; Canfield et al. 2003a, 2003b; Gardella 2001; Huseman et al. 1992; Lanphear et al. 2000; Needleman and Gatsonis 1990; Needleman et al. 1990, 1996; Schwartz 1994; Schwartz et al. 1986).

Environmental lead exposure occurs through ingestion or inhalation of lead particles (Davidson and Rabinowitz 1991). Most childhood lead uptake in the United States results from exposure to deteriorating lead paint in household dust and soil and to lead in soil from historic deposition from mobile sources (Davidson and Rabinowitz 1991; Mielke and Reagan 1998), although drinking water can be a source of chronic exposure (Maas et al. 2005a; Raab et al. 1987; Sherlock et al. 1984; Thomas et al. 1979). Although drinking water is not the primary route of exposure for most children, the U.S. Environmental Protection Agency (EPA 1994) has estimated that 14–20% of total childhood lead exposure in the United States is from drinking water (U.S. EPA 1994).

In 1991, the U.S. EPA (1991) set a maximum contaminant level goal for lead in drinking water of zero and an action level of 15 ppb. Although water supplies themselves can be contaminated with lead, most lead in drinking water comes from residential plumbing (Davidson and Rabinowitz 1991). Lead piping was uncommon after the 1930s, but lead soldering was common and legal until 1986, and some plumbing fixtures today still contain lead (Maas and Patch 2004; Safe Drinking Water Act Amendments of 1986; Troesken and Beeson 2003). Lead is soluble in water, and this solubility is markedly increased by high water softness and acidity (Davidson and Rabinowitz 1991; Gaines 1913; Raab et al. 1993).

Drinking water preparation can differ significantly across water systems, depending on the type and quality of source water, and is intended to protect the public from microbial pathogens, prevent dental caries, reduce harmful disinfection by-products, and reduce metal contamination from pipes (U.S. EPA 1999). To achieve these goals, drinking water treatment systems generally process water using a number of additives, including fluoride, disinfectants (historically primarily chlorine), coagulants to precipitate fine solids, and anticorrosivity agents to reduce leaching of metals from plumbing into the water (Durham Department of Water Management 2004; Edwards and Dudi 2004; Edwards et al. 1999; Schock 1980, 1989). The corrosivity of water can be highly sensitive to small fluctuations in pH, alkalinity, temperature, oxidation potential, and concentrations of individual chemical species (Edwards and Dudi 2004; Edwards et al. 1999; Schock 1980, 1989; Schock et al. 2001; Vasquez et al. 2006).

Trihalomethanes, by-products of chlorine-based disinfection processes, have long been recognized as carcinogenic, neurotoxic, and teratogenic (Cotruvo 1981; Maxwell et al. 1991). Concerned over the enduring presence of these chlorination by-products, in 1998 the U.S. EPA published its *Stage I Disinfection By-products Rule*, requiring water treatment systems to reduce the formation of these disinfection by-products (U.S. EPA 1998a). Exceedances of the U.S. EPA trihalomethane standard (U.S. EPA 1998a) have led an increasing number of municipal water treatment facilities to switch from chlorine to chloramine use.

Chloramines alter water chemistry and often must be accompanied by other changes to water treatment (U.S. EPA 1999). Several recent studies provided evidence that the introduction of chloramines to water systems with lead-containing pipes, fixtures, or solder may increase the amount of dissolved lead in water because of changes in water chemistry; interactions with additives such as coagulants or fluoridation agents may remove lead dioxide scales originally formed during decades of chlorine-based disinfection (Edwards and Dudi 2004; Maas et al. 2005b; Schock 1990; Schock et al. 2001; Switzer et al. 2006). This leaching might be managed to some extent by the addition of anticorrosivity agents during the water treatment process; however, the details of all the related environmental chemistry are not fully understood and are highly dependent on the particular chemical interactions found in each water treatment and distribution system

Address correspondence to M.L. Miranda, Nicholas School of the Environment and Earth Sciences, Duke University, Box 90328, Levine Science Research Center Room A134, Durham, NC 27708 USA. Telephone: (919) 613-8023. Fax: (919) 684-3227. E-mail: mmiranda@duke.edu

We thank A. Bauer, J. Davis, S. Edwards, E. Norman, and T. Ward for their work on this project. We also thank the Wayne County GIS Department for facilitating this analysis by providing access to tax parcel and water district shapefiles.

This research was made possible by funding from the Centers for Disease Control and Prevention (through a subcontract with the North Carolina Department of Environment and Natural Resources) and the National Institute of Environmental Health Sciences Superfund Basic Research Program (3 P42 ES010356-07).

The authors declare they have no competing financial interests.

Received 18 June 2006; accepted 7 November 2006.

water treatment system boundary, census, and geocoded blood lead surveillance data. The tax parcel data obtained from the Wayne County GIS Department in 2005 contained information on the year the house was built, owner name and address, sale price and date, heated square feet, and physical address of residential tax parcels. The attribute data within the tax parcel dataset were used to geocode blood lead surveillance data, as well as to determine the year built for houses where screened children resided. Potable service districts data were downloaded from the Wayne County GIS spatial data explorer (Wayne County GIS Department 2006). This dataset contains basic data for each of the water systems within Wayne County, including district name, number, and land area.

Blood lead surveillance data were obtained from the North Carolina Childhood Lead Poisoning Prevention Program, which maintains a statewide registry of all blood lead screens conducted on North Carolina children under the age of 6 years. These data include 18,284 records for Wayne County (11,556 children) with test date, test result, child's name, and child's home address. The latter two fields were used to geocode the 1999–2003 surveillance data to the tax parcel data allowing us to create a GIS with 13,231 geocoded records (8,607 children). This GIS linked the blood lead screening data with age of housing, drinking water source, and census data for 7,270 records (U.S. Census Bureau 2000). For children who were screened more than once during this time period, we selected the record with the highest reported BLL for each child at each parcel with the earliest screening date. We were able to successfully geocode 72.4% of records (74.5% of children) in the surveillance data for 1999–2003, with many of the nongeocoded records in the rural areas of the county, in mobile home parks, or receiving mail at a post office box.

We analyzed the data using both exploratory methods and more formal multivariate techniques. Because the distribution of blood lead screens is skewed toward the origin, we used the natural logarithm of the BLL as our dependent variable. In addition, because some residential parcels had more than one linked blood lead screen (e.g., different tenants/owners or multiple siblings from the same family), we used cluster analysis to ensure that we properly weighted the contribution of any one residence to the analysis. We classified each blood lead screen according to whether the drinking water source used chloramines in the disinfection process with a binary (0/1) variable (Table 2).

Previous research indicates that BLLs are typically related to the year the child's residence was built and demographic variables such as household income and percent African-American race (Lanphear et al. 1998; Miranda et al. 2002; Pirkle et al. 1998; Roberts et al. 2003; Sargent et al. 1995); therefore, we included these variables in the analysis as well. Our general approach for specifying a parcel level model follows the methods established previously (Miranda et al. 2002).

Results

Exploratory graphical analysis reveals some interesting relationships. Figure 2 shows mean BLLs over time differentiated by drinking water source (WWS or GWS) and highlights the point in time when the GWS switched to chloramines for water disinfection. For both sources of drinking water, mean BLLs increased between the January 1999–February 2000 and the March 2000–December 2000 time periods.

A two sample t-test assuming equal variances revealed that the mean BLL was significantly higher ($p < 0.00001$) for children residing in residential tax parcels whose water source relied on chloramines for disinfection (mean BLL = 4.93 μg/dL) compared with those whose water source did not rely on chloramines (mean BLL = 4.19 μg/dL). This may, of course, result solely from artifacts such as the GWS serving more of the older housing stock or the GWS serving more homes in less well-maintained areas.

Exploratory graphical analysis was designed to look at differences in BLLs across age classes of homes. Figure 3 shows mean BLL by test year, differentiating between GWS and WWS. These figures are broken out by age of housing categories (pre-1926, 1926–1950, 1951–1975, after 1975). The mean BLLs are virtually indistinguishable across the different water treatment systems for housing built after 1950. This is consistent with empirical observations that older age classes of homes are more likely to contain lead pipes or lead-containing fixtures or solder (Safe Drinking Water Act Amendments of 1986; Troesken and Beeson 2003; U.S. EPA 1991).

Although the exploratory analysis provides insights regarding variables of interest, the question of whether the switch to chloramines by the GWS affected BLLs in children must be explored using multivariate analysis. We used log-linear cluster analysis of blood lead screens, with explanatory variables that included year built; census measures of income and percent African American; three dummy variables for seasons when the blood samples were taken (winter as reference) to control for any potential effect of seasonal variation in BLLs; a dummy variable indicating whether chloramines were being used by the water treatment system that served the home residence of the child at the time of the blood lead screen; and interactive terms that combined year built with the chloramine-use variable. The interactive terms were incorporated in two ways. First, we constructed an interactive variable (year built × chloramines)

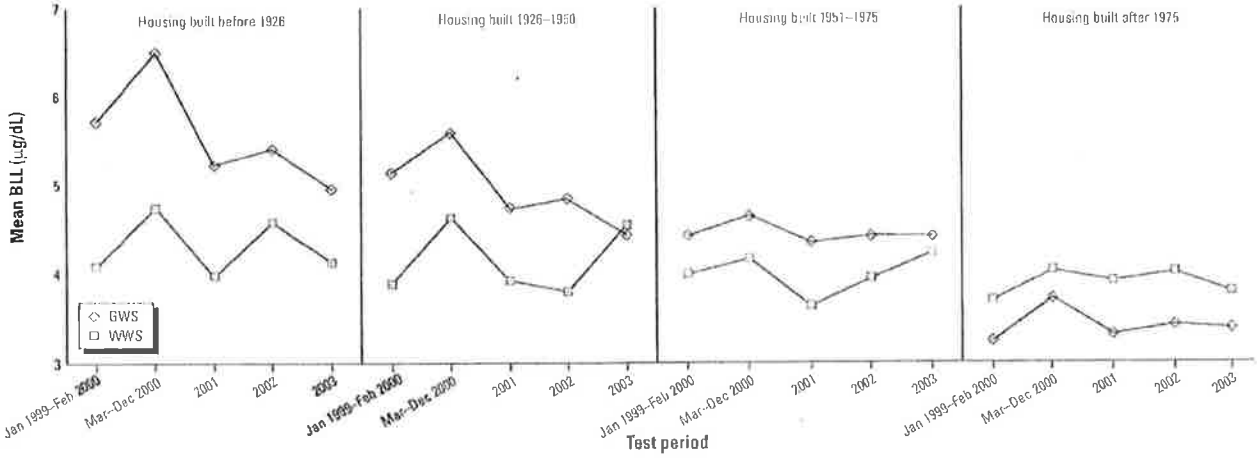

Figure 3. Mean BLLs by test period, by age of housing.

programs typically target children living in the highest risk housing, based, in many cases, on age of housing. However, because Wayne County screens such a high proportion of young children, this concern is somewhat mitigated. In spite of targeted screening efforts, the distribution of age of housing where sampled children resided differs by < 2 percentage points from the distribution for the whole county. Third, some environmental chemists hypothesize that the dissolution of lead from pipes into water after switching to chloramines is a transient process, because a new coating may eventually develop on the inside of pipes, effectively creating a new barrier between the water and the lead source. This temporal dimension is unexplored in the current analysis. Fourth, we did not analyze lead in water directly and thus can only indirectly suggest that the increase in BLLs after the switch to chloramines was caused by an increase in lead in drinking water. We are currently working with the State of North Carolina to identify houses to sample for lead in water based on a geographic sampling design; we will analyze these data when they become available.

In the present study we directly analyzed the effects of changes in water treatment options on BLLs. This study provides important policy guidance to communities that may be balancing trihalomethane exceedances against possible increases in lead in drinking water. As similar research is conducted in other areas, and the underlying environmental chemistry is clarified, water treatment strategies can be optimized across the multiple objectives that municipalities face in providing high-quality drinking water to local residents.

References

Bellinger DC. 1995. Interpreting the literature on lead and child development: the neglected role of the "experimental system." Neurotoxicol Teratol 17(3):201–212.

Canfield RL, Henderson CR, Cory-Slechta DA, Cox C, Jusko TA, Lanphear BP. 2003a. Intellectual impairment in children with blood lead concentrations below 10 μg per deciliter. N Engl J Med 348(16):1517–1526.

Canfield RL, Kreher DA, Cornwell C, Henderson CR Jr. 2003b. Low-level lead exposure, executive functioning, and learning in early childhood. Child Neuropsychol 9(1):35–53.

CDC (Centers for Disease Control and Prevention). 2004. Blood lead levels in residents of homes with elevated lead in tap water—District of Columbia, 2004. MMWR Morb Mortal Wkly Rep 53(12):268–270.

Cotruvo JA, 1981. THMs in drinking water. Environ Sci Technol 15(3):768–774.

Davidson CI, Rabinowitz M. 1991. Lead in the environment: from sources to human receptors. In: Human Lead Exposure (Needleman HL, ed). Boca Raton, FL:CRC Press.

Durham Department of Water Management. 2004. Tap Into Quality: Water Quality Report 2004. Durham, NC:Durham Department of Water Management.

Edwards M, Dudi A. 2004. Role of chlorine and chloramine in corrosion of lead-bearing plumbing materials. J Am Water Works Assoc 96(10):69–81.

Edwards M, Jacobs S, Dodrill D. 1999. Desktop guidance for mitigating PB and Cu corrosion by-products. J Am Water Works Assoc 91(5):66–77.

Gaines RH. 1913. The corrosion of lead. J Ind Eng Chem 5(9):766–768.

Gardella C. 2001. Lead exposure in pregnancy: a review of the literature and argument for routine prenatal screening. Obstet Gynecol Surv 56(4):231–238.

Huseman CA, Varma MM, Angle CR. 1992. Neuroendocrine effects of toxic and low blood lead levels in children. Pediatrics 90(2):186–189.

International Programme on Chemical Safety. 1995. Inorganic Lead. Environmental Health Criteria 165. Geneva:World Health Organization.

Krieger N, Chen JT, Waterman PD, Soobader MJ, Subramanian SV, Carson R. 2003. Choosing area based socioeconomic measures to monitor social inequalities in low birth weight and childhood lead poisoning: The Public Health Disparities Geocoding Project (US). J Epidemiol Community Health 57(3):186–199.

Lanphear BP, Byrd RS, Auinger P, Schaffer SJ. 1998. Community characteristics associated with elevated blood lead levels in children. Pediatrics 101(2):264–271.

Lanphear BP, Dietrich K, Auinger P, Cox C. 2000. Cognitive deficits associated with blood lead concentrations < 10 μg/dL in US children and adolescents. Public Health Rep 115(6):521–529.

Lin NH, Torrents A, Davis AP, Zeinoli M, Taylor FA. 1997. Lead corrosion control from lead, copper-lead solder, and brass coupons in drinking water employing free and combined chlorine. J Environ Sci Health Part A Toxic Hazard Subst Environ Eng A32(4):865–884.

Maas RP, Patch SC. 2001. Update on research findings and regulatory/legal activities regarding tapwater lead exposure from traditional leaded-brass and "no-lead" type plumbing parts. J N Engl Water Works Assoc 115(2):99–111.

Maas RP, Patch SC, Morgan DM, Pandolfo TJ. 2005a. Reducing lead exposure from drinking water: recent history and current status. Public Health Rep 120(3):316–321.

Maas RP, Patch SC, Smith A-M. 2005b. Effects of Flourides and Chloramine on Lead Leaching from Leaded-brass Surfaces. Asheville, NC:Environmental Quality Institute.

Maxwell NI, Burmaster DE, Ozonoff D. 1991. Trihalomethanes and maximum contaminant levels. The significance of inhalation and dermal exposures to chloroform in household water. Regul Toxicol Pharmacol 14(3):297–312.

Mielke HW, Reagan PL. 1998. Soil is an important pathway of human lead exposure. Environ Health Perspect 106(suppl 1):217–229.

Miranda ML, Dolinoy DC, Overstreet MA. 2002. Mapping for prevention: GIS models for directing childhood lead poisoning prevention programs. Environ Health Perspect 110:947–953.

Miranda ML, Silva JM, Overstreet Galeano MA, Brown JP, Campbell DS, Coley E, et al. 2005. Building geographic information system capacity in local health departments: lessons from a North Carolina project. Am J Public Health 95(12):2180–2185.

Needleman HL, Gatsonis CA. 1990. Low-level lead exposure and the IQ of children. A meta-analysis of modern studies. JAMA 263(5):673–678.

Needleman HL, Riess JA, Tobin MJ, Biesecker GE, Greenhouse JB. 1996. Bone lead levels and delinquent behavior. JAMA 275(5):363–369.

Needleman HL, Schell A, Bellinger DC, Leviton A, Allred EN. 1990. The long-term effects of exposure to low doses of lead in childhood. An 11-year follow-up report. N Engl J Med 322(2):83–88.

Pirkle JL, Kaufmann RB, Brody DJ, Hickman T, Gunter EW, Paschal DC. 1998. Exposure of the U.S. population to lead, 1991–1994. Environ Health Perspect 106:745–750.

Pueschel SM, Linakis JG, Anderson A. 1996. A historical perspective. In: Lead Poisoning in Childhood (Pueschel SM, Linakis JG, Anderson AC, eds). Baltimore, MD:Paul H Brookes Publishing.

Raab GM, Laxen DPH, Anderson N, Davis S, Heaps M, Fulton M. 1993. The influence of pH and household plumbing on water lead concentration. Environ Geochem Health 15(4):191–200.

Raab GM, Laxen DPH, Fulton M. 1987. Lead from dust and water as exposure sources for children. Environ Geochem Health 9(3–4):80–85.

Reissman DB, Staley F, Curtis GB, Kaufmann RB. 2001. Use of geographic information system technology to aid health department decision making about childhood lead poisoning prevention activities. Environ Health Perspect 109:89–94.

Renner R. 2004. Plumbing the depths of D.C.'s drinking water crisis. Environ Sci Technol 38(12):224A–227A.

Renner R. 2005. Chloramines again linked to lead in drinking water. Environ Sci Technol 39(15):314A. Available: http://pubs.acs.org/subscribe/journals/esthag-a/39/i15/html/060105news3.html [accessed 14 December 2006].

Renner R. 2006. Lead in water linked to coagulant. Environ Sci Technol 40(17):5164–5165.

Roberts JR, Hulsey TC, Curtis GB, Reigart JR. 2003. Using geographic information systems to assess risk for elevated blood lead levels in children. Public Health Rep 118(3):221–229.

Rushton G. 2003. Public health, GIS, and spatial analytic tools. Annu Rev Public Health 24:43–56.

Safe Drinking Water Act Amendments of 1986. 1986. Public Law 99–339.

Sargent JD, Brown MJ, Freeman JL, Bailey A, Goodman D, Freeman DH Jr. 1995. Childhood lead poisoning in Massachusetts communities: its association with sociodemographic and housing characteristics. Am J Public Health 85(4):528–534.

Schock MR. 1980. Response of lead solubility to dissolved carbonate in drinking water. J Am Water Works Assoc 72(2):695–704.

Schock MR. 1989. Understanding corrosion control strategies for lead. J Am Water Works Assoc 81(7):88–100.

Schock MR. 1990. Causes of temporal variability of lead in domestic plumbing systems. Environ Monit Assess 15(1):59–82.

Schock MR, Harmon SM, Swertfeger J, Lohmann R. 2001. Tetravalent lead: a hitherto unrecognized control of tap water lead contamination. In: Water Quality Technology Conference, 11 November 2001, Nashville, TN. Denver, CO:American Water Works Association, 2270–2291.

Schwartz J. 1994. Low-level lead exposure and children's IQ: a meta-analysis and search for a threshold. Environ Res 65(1):42–55.

Schwartz J, Angle C, Pitcher H. 1986. Relationship between childhood blood lead levels and stature. Pediatrics 77(3):281–288.

Sherlock JC, Ashby D, Delves HT, Forbes GI, Moore MR, Patterson WJ, et al. 1984. Reduction in exposure to lead from drinking water and its effect on blood lead concentrations. Hum Toxicol 3(5):383–392.

Switzer JA, Balasubramanian VV, Boonsalee S, Kulp EA, Bohannan EW. 2006. Evidence that monochloramine disinfectant could lead to elevated Pb levels in drinking water. Environ Sci Technol 40(10):3384–3387.

Thomas HF, Elwood PC, Welshy E, St Leger AS. 1979. Relationship of blood lead in women and children to domestic water lead. Nature 282(5740):712–713.

Tiemann M. 2005. Lead in Drinking Water. Washington, DC, Issues and Broader Regulatory Implications. Washington, DC:Congressional Research Service.

Troesken W, Beeson P. 2003. The significance of lead water mains in American cities. In: Health and Labor Force Participation over the Life Cycle (Costa D, ed). Chicago:University of Chicago Press.

U.S. Census Bureau. 2000. Census 2000, Summary File 3. Available: http://factfinder.census.gov [accessed 8 March 2006].

U.S. EPA. 1991. Lead and copper rule (LCR). Fed Reg 56:26460–26564.

U.S. EPA. 1994. Lead Leaching from Submersible Well Pumps: Environmental Fact Sheet. EPA747-F-94-001. Washington, DC:U.S. Environmental Protection Agency.

U.S. EPA. 1998a. Stage 1 Disinfectants and Disinfection Byproducts Rule. EPA 815-F-98-010. Washington, DC:U.S. Environmental Protection Agency. Available: http://www.epa.gov/safewater/mdbp/dbp1.html [accessed 12 December 2006].

U.S. EPA (U.S. Environmental Protection Agency). 1998b. National primary drinking water regulations: interim enhanced surface water treatment. Fed Reg 63(241):69477–69521.

U.S. EPA. 1999. Microbial and Disinfection Byproducts Rules Simultaneous Compliance Guidance Manual. EPA 815-R-99-015. Washington, DC:U.S. Environmental Protection Agency. Available: http://www.epa.gov/safewater/mdbp/simult.pdf [accessed 12 December 2006].

Vasquez FA, Heaviside R, Tang Z, Taylor JS. 2006. Effect of free chlorine and chloramines on lead release in a distribution system. J Am Water Works Assoc 98(2):144–154.

Vine MF, Degnan D, Hanchette C. 1997. Geographic information systems: their use in environmental epidemiology research. Environ Health Perspect 105:598–605.

Wayne County GIS Department. 2006. Spatial Data Explorer: Potable Water Service Districts Layer. Available: http://maps.waynegov.com/viewer.htm [accessed 8 March 2006].

Environmental Science & Technology Online News
http://pubs.acs.org/subscribe/journals/esthag-w/2005/jun/science/rr_chloramines.html

Science News – June 29, 2005

Chloramines again linked to lead in drinking water

High blood lead levels discovered in two boys this spring are being linked to drinking water in Greenville, N.C. Local public health authorities are advising pregnant women, infants, and young children to avoid tap water, and state officials are evaluating drinking water throughout the state.

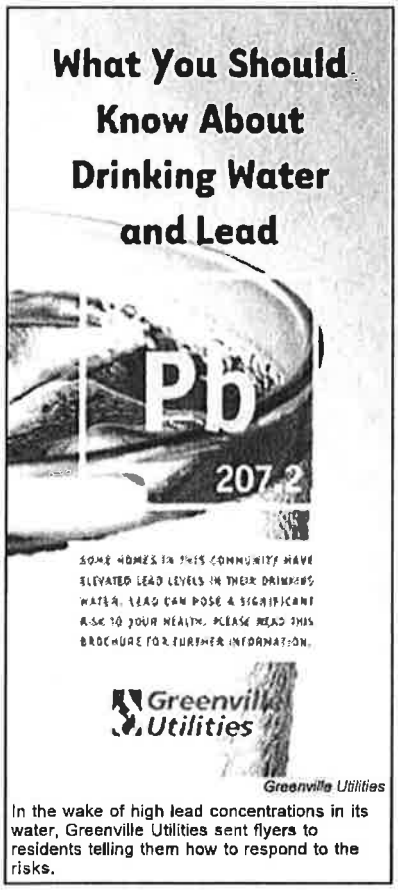

In the wake of high lead concentrations in its water, Greenville Utilities sent flyers to residents telling them how to respond to the risks.

The episode is being compared to Washington, D.C.'s recent problems with lead in drinking water (*Environ. Sci. Technol.* **2004**, *38*, 224A–227A). Utilities in both cities had switched from free chlorine disinfectant to chloramines in the past few years to comply with the U.S. EPA's 1998 disinfectants and disinfection byproducts rule. However, unlike Washington, Greenville lacks lead pipes, and the utility has used a polyphosphate corrosion inhibitor for years. The inhibitor should have created a protective film on plumbing.

Lead solder in the home is being blamed for the boy with the highest blood lead levels of 20 milligrams per decaliter (mg/dL). His home's tap water contained 400 parts per billion (ppb) total lead, according to Ed Norman, an epidemiologist with the North Carolina Department of Environment and Natural Resources. The Centers for Disease Control and Prevention lists 10 mg/dL as the minimum blood lead level of concern; 20 mg/dL is considered lead poisoning.

Corrosion expert Marc Edwards at Virginia Polytechnic Institute and State University says that the release of lead due to corrosion of solder and brass is consistent with his experimental results involving chloramines. "For certain brasses and solders, the corrosion can be extensive, although it is difficult to predict," he says. Edwards's results were recently published (*J.*

Am. Water Works Assoc. **2004**, *96*, 69–81). The effectiveness of different corrosion inhibitors in the face of changing disinfection practices is still not resolved, he says.

But Richard Maas of the Environmental Quality Institute at the University of North Carolina, Asheville, says that the corrosion is due to a combination of chloramines, excess ammonia, and fluorosilicic acid, which is commonly used to fluoridate water supplies. His findings, yet to be peer-reviewed, are described in a technical report released June 13 by his institute.

The Greenville treatment plant began adding chloramines into its distribution pipes in December 2002 and switched from free chlorine to ozone as its primary disinfectant in August 2003. Under the reduced sampling requirements of EPA's 1991 lead and copper rule, utilities must test household drinking water for lead in some of the homes they serve every three years, says Greenville water treatment plant manager Barrett Lasater. A problem emerged during the scheduled tap-water sampling in the summer of 2004, when about 25% of the samples exceeded EPA's 15 ppb total lead action level. As a result, the district switched to orthophosphate inhibitor in August 2004, anticipating that the additive would quickly reduce lead levels. Thus, the increased lead levels puzzle Lasater, who says that several bench-scale pilot studies did not find that chloramines increased lead corrosion.

The confusion may be frustrating, but it's understandable, says Edwards. "We barely understand the effects of chloramines on plumbing." —REBECCA RENNER

Copyright © 2005 American Chemical Society

Environmental Science & Technology Online News
http://pubs.acs.org/subscribe/journals/esthag-w/2006/may/science/rr_mislead.html

Science News –May 31, 2006

Mis-lead

Water utility managers and public-health officials may be getting the wrong message about what happened during Washington, D.C.'s drinking-water crisis.

At water conferences across the U.S., scientists and engineers are talking about lessons learned from the record levels of lead in Washington, D.C., drinking water that caused panic in the city in 2004. Government agencies describe the lack of harm from the incident; this has prompted many water and public-health professionals to argue that the D.C. experience shows that lead in drinking water is not a health threat. As a result, some experts now question the need for complex and costly technologies to control corrosion and keep lead levels low.

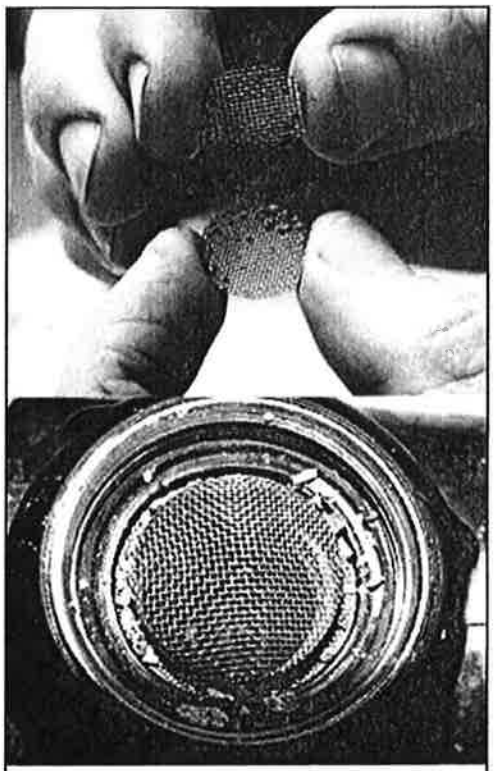

Christopher Strock
Not just lead pipes: particles of lead solder in drinking water caused elevated blood lead in Greenville, NC.

But are the water experts being misled? An extensive 2-year investigation by Virginia Polytechnic and State University corrosion engineer Marc Edwards, who initially identified the severity of the D.C. problem, and further *ES&T* reporting reveal that the federal and local agencies charged with overseeing the D.C. water system used flawed science to try to quiet public concerns.

Lessons in lead

In March 2004, John Morrow, director of the Public Health Department in Pitt County, N.C., had a mystery on his hands. His office had identified a 1-year-old child in Greenville with elevated blood lead levels, but extensive investigations in the boy's home and the nearby environment failed to turn up a contamination source. Then, a water sample taken as part of an unrelated investigation revealed high levels of lead in the family's drinking water. As the child's blood lead level climbed above 20 micrograms/deciliter (μg/dL)—two times the Centers for Disease Control and Prevention (CDC) level of concern for children under 6 years old—Morrow turned to experts in D.C. for advice.

Just 3 months earlier, D.C. residents had learned from a *Washington Post* story that hazardous levels of lead had been present in their drinking water for several years. The problem was caused by a switch from free chlorine to chloramine disinfectant in order to meet new U.S. EPA regulations. D.C. officials pointed to old lead pipes called service lines, which bring water to homes, as the source of the lead.

Like D.C., Greenville's water provider, Greenville Utilities, had switched from free chlorine to chloramines for disinfection in 2002. The switch seemed to be related to the elevated lead levels. But none of Greenville's 565 miles of water pipes contained lead.

Faced with what appeared to be a similar problem, Morrow found materials on the web from Tee Guidotti, health adviser to D.C. Water and Sewer Authority (WASA), the capital's water provider, and director of occupational medicine and toxicology at George Washington University. Guidotti downplayed the role of water. "These all indicated to me that drinking water lead and blood lead are not correlated," says Morrow.

Indeed, on March 31, 2004, D.C. Department of Health (DOH) interim chief medical officer Daniel Lucey told the *Washington Post*, "We are not seeing any widespread lead toxicity attributable to the water in D.C." Lucey's comments were prompted by a preliminary CDC study that concluded blood lead levels had not risen appreciably as a result of D.C.'s tainted water, even in homes where concentrations were unusually high—300 parts per billion (ppb) or more. Meanwhile, sampling data from local schools and day-care facilities suggested that drinking-water lead concentrations in these places were not extraordinarily high. On the basis of these findings, many accepted the statements of agency experts, that the "D.C. lead crisis" was much ado about nothing and that "drinking water is at most a minor source of lead for children" (The *Washington Post*, May 9, 2004, p B1).

But a careful investigation of the D.C. studies gives a different picture. The crucial assumption that the lead service lines were the only major source of the toxic metal, along with the surveys for lead in blood and in drinking water at D.C. schools and apartments, is deeply flawed and misleading, say experts familiar with the work.

The change in disinfectant did cause mineral scales inside D.C. lead service lines to dissolve, says corrosion expert Michael Schock with EPA's Office of Research and Development. However, the more-corrosive water also eroded lead solder, which sent particles down the pipes, and leached the metal from brass plumbing in homes. He points out that brass faucet bodies and necks, shutoff valves, water meters, and other plumbing components usually contain lead, even if the brass is labeled lead-free. That is because Congress defined in the 1996 Safe Drinking Water Act amendments that "lead-free" plumbing pipes and components could have up to 8% lead.

Edwards can document at least two children in one D.C. family whose high blood levels are due to exposure from drinking water [web (see graph below). And in Greenville, particles of lead solder were eventually identified as the source of the contamination for the 1-year-old boy and another child with

elevated blood lead levels.

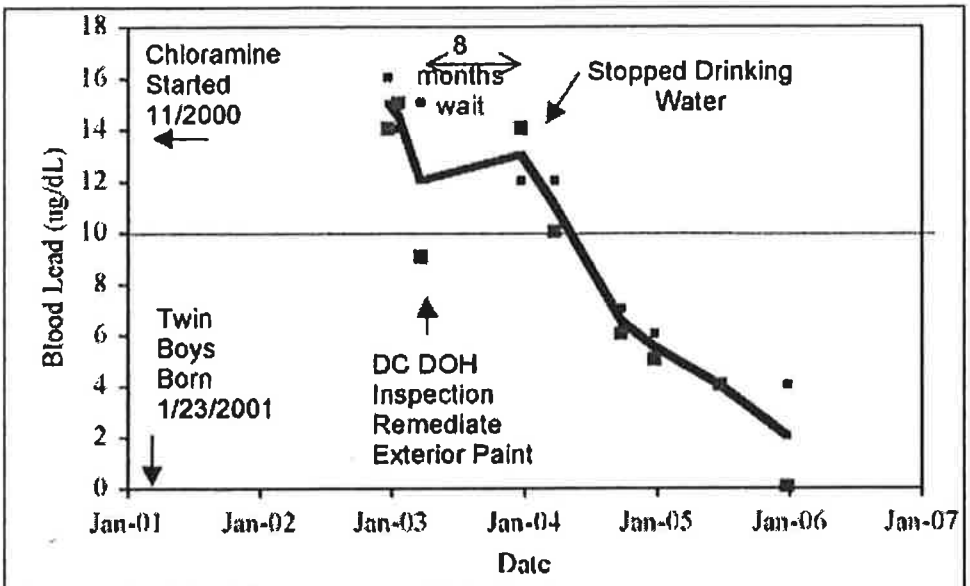

Blood lead data for twin boys born in 2000. After the levels were found to be higher than CDC's level of concern, DOH inspected their home for lead paint and found only a remote exterior door as an admittedly unlikely source. However, painting the door failed to bring down the boys' blood lead levels. But when they stopped drinking tap water and it was no longer used in cooking their meals, the boys' blood lead levels declined rapidly.

However, misconceptions from the D.C. lead crisis persist, even as other water utilities switch from chlorine to chloramines disinfection to comply with EPA's Stage 2 Disinfectants and Disinfection Byproducts Rule. Experts warn that problems with lead in water—and perhaps further cases of elevated blood lead levels—could be avoided if scientists, regulators, engineers, and public-health officials fully realized the true lessons of the D.C. lead crisis.

Lead service lines are the source

Early on, officials in D.C. decided to focus on lead service pipes as the only significant source of contamination. Through numerous Freedom of Information Act requests, Edwards has pieced together a partial chronology of the discussions that focused attention on the lead service lines. Despite repeated requests, officials at DOH and WASA declined to speak to *ES&T* for this article.

From the start, some at DOH expressed the hope that the data supported a focus only on lead service lines, because this would limit the problem. Of the about 123,000 residences in D.C., only about 23,000 are estimated to have lead service lines.

On February 8, 2004, James Collier, DOH's water-quality division director, emailed his colleagues: "I believe that if we can get away from old lead-soldered copper plumbing and isolate on the lead service lines, we can calm down all of the public except for the 23,000. If we stay with the old copper lead-solder plumbing, we have 123,000. Just make sure that the data supports this because we can not afford to be very wrong."

A day later, WASA mailed an information letter on the lead crisis, which emphasized the problem of lead service lines, briefly mentioned solder, and ignored brass plumbing components. But within the agencies involved, a very different discussion was taking place.

On Feburary 12, EPA Region environmental scientist Lisa Donahue emailed agency colleagues: "We continue to miss a 'teachable moment' by maintaining the emphasis on the service lines as a perceived sole source of lead contamination. The first draw [sic] samples that put WASA into this situation came from plumbing containing brass faucets, fixtures, and valves. Until the water has been tested below 15 ppb, shouldn't those high risk populations be particularly cautious? If the water is corrosive, the brass will leach lead."

At that time, Donahue suggested that future public information letters warn pregnant women and children in all homes that tested above 15 ppb—EPA's action level—not to drink the water. This would have expanded the city's focus to homes without lead service lines.

Donahue's language was never accepted. And throughout the crisis, DOH focused its public-health intervention efforts almost exclusively on those homes with lead service lines.

Schock was the corrosion expert on the technical evaluation work group assembled to advise authorities on the crisis. In response to questions about the source of the lead, he replied on March 22, 2004, "What I find hard to believe is why, with the known contamination potential from leaded brasses currently being certified by NSF [for plumbing standards] and sold, plus some old solder around, does there seem to be so much effort to just focus on the service lines?"

Richard Rogers, chief of EPA's Region 3 drinking-water branch, replied, "This is being driven as much by public relations and politicians as by what makes sense most other ways."

Indeed, later data published by WASA showed that 15% of the homes with very high (above 150 ppb) lead did not have lead service lines. But only residents with lead pipes received the special health warnings, bottled water, and filters from WASA.

D.C. schools and apartments

On April 29, DOH and WASA released the results of sampling for lead in D.C. public schools. Only 4% of the 1976 water samples tested from 130 schools had lead levels above 20 ppb, the action level specified by the 1988 Lead Contamination Control Act, which covers drinking water in schools and day-care centers.

Given the high levels of lead in drinking water at the time, experts say that these results were surprisingly low and had the effect of reassuring people. But there are strong reasons to think that the sampling strategy was flawed. For instance, a neighboring utility that used the same water source as D.C., but which has extremely good lead-corrosion control, did not have a single home sample above the EPA action limit. Yet 23.5% of the water taps in schools served by this utility were more than 20 ppb, says Edwards.

The school sampling was ordered by EPA Region 3 administrator Donald Welsh, who added that "Sampling must follow EPA protocol." The agency's protocol for sampling schools calls for first-draw samples to be taken after the water has been in contact with pipes for 8–12 hours. But a very different protocol was followed in D.C. schools. The day before sampling, staff were directed to remove the aerators and flush all of the drinking-water lines in the entire building from top to bottom. After letting the water sit overnight, they were directed to slowly fill sample bottles.

"If I did not want to find a lead problem where a serious problem existed, this is the protocol I would write," Edwards says. Because these schools do not have lead service lines, the principal source of lead leaching would be from solder or brass. EPA's own literature notes that particles trapped in the aerators serve as a key source of lead and that flushing sediments from the lines can reduce lead exposure.

Collecting the water slowly minimizes the chance of mobilizing lead particles.

Edwards has followed the standard EPA protocol and the modified one used in D.C. schools to sample for lead in buildings that do not have lead service lines. The modified approach decreases lead levels in faucets with aerators by 2–3 times the values from the EPA protocol; in some situations the decrease is as much as 200 times. Edwards and his students have been unable to get permission to collect samples in D.C. schools using the standard EPA protocol.

A consulting engineer familiar with sampling in schools agrees with Edwards that the D.C. procedure was odd. "They flushed the devil out of those schools," the expert says. A Region 3 EPA official who spoke on condition of anonymity tells *ES&T* that the sampling was not meant to reflect what children were being exposed to at the time. "That study was designed to look at exposure in the future, not exposure in the past."

Another scientist sums up these criticisms: "The survey of lead in D.C. school drinking water was unlikely to reveal both the actual previous situation to which children and teachers were really exposed, not to mention the worst-case scenario, which is the intention of the law." The same modified protocol was eventually used by WASA to assess problems with lead in D.C. apartments—and found relatively low levels of lead. This observation was used to justify WASA and DOH's exclusive focus on homes with lead service lines.

CDC's survey

When asked to list some of the most important lessons from the D.C. lead crisis, Guidotti says that "Drinking water is a minor contributor to lead exposure, but takes on huge significance because people become worried when they hear that drinking water, which they depend upon, may be contaminated." Guidotti has emphasized this point many times when he has spoken at scientific meetings throughout the country (see PowerPoint presentation).

Everyone agrees that any exposure to lead is detrimental to children, and a growing number of studies quantitatively assess the effect of low-level exposure to lead, says John Rosen, a pediatrician and national expert on lead poisoning at Montefiore Medical Center. Last year, a study by Bruce Lanphear at Cincinnati Children's Hospital Medical Center and colleagues associated a drop of almost 4 IQ points with blood lead increase from 2.4 to 10 μg [already defined on first use for web] of lead per dL of blood (*Environ. Health Perspect.* **2005**, *113*, 894–899). This study is consistent with other reports, say experts.

In the midst of the lead crisis, EPA's Office of Water asked the agency's National Center for Environmental Assessment (NCEA) to evaluate the effects of lead in drinking water on children's blood lead levels with an exposure model. In March 2004, NCEA delivered its assessment [130KB PDF]: The blood lead levels of infants up to 1 year in age who drink formula made with tap water "are sensitive to drinking water lead concentrations." The model predicted that infants' blood lead levels would increase to approximately 6 μg/dL for a water lead concentration of 50 ppb, for 11 μg/dL at 100 ppb, and to a dangerous 20.8 μg/dL for a concentration of 200 ppb.

However, Guidotti, Wasa and DC DOH have frequently noted in presentations that when CDC measured blood lead levels in the residents of approximately 98 homes with drinking-water lead of more than 300 ppb, the study did not find elevated blood lead levels.

But Mary Jean Brown, head of CDC's lead poisoning prevention branch and the principal author of the study, doesn't agree with this analysis. She tells *ES&T* that up to a year separates collection of the water samples and the blood samples. "This study does not say that 300 ppb lead in drinking water is safe," says Brown.

As Edwards points out, many of those tested by CDC had been notified that their water contained lead at more than 20 times the EPA action limit months before their blood was drawn. It is likely that many began drinking bottled water or using water filters. Since the half-life for lead in the blood is about a month, this was more than enough time for blood lead levels to drop, he adds.

When asked by *ES&T*, Guidotti agrees that the CDC study is not conclusive. "This was an ecological study, and ecological studies are weak at proving associations," he admits. "All of D.C. was intensely aware of the lead problem—not just through newspaper reports but through public meetings and announcements in churches. People rapidly started using filters or bottled water," he says. "It is a major misinterpretation of the data to say that this study shows that 300 ppb in drinking water is not associated with an increase in blood lead levels."

Brown tells *ES&T* that she intends to look into the issue of the study's interpretation and seek ways to clarify its significance. "If misinterpretation is widespread, we'll have to do something, because that's not what this study is saying."

Brown may have to work quickly. Catherine Karr, director of the Northwest Pediatric Environmental Health Specialty Unit at the University of Washington, has recently been investigating lead in Seattle schools' drinking water. According to Karr, CDC's study is "very influential because it is one of the only studies that presents data on water lead and blood lead." She was surprised to learn from *ES&T* about the study's limitations. "The study is misleading," she says. "They could have made the sampling gap [between exposure and measurement] clear by just adding one small sentence saying that there was a sampling gap. Why didn't they do that?"

"At a minimum, it seems easy to understand how otherwise responsible public-health officials believed that the takeaway lesson of Washington, D.C., is that more than 300 ppb lead in drinking water did not significantly elevate blood lead or otherwise harm the public," says Edwards. "It may take years to correct this mistaken belief," he adds.

Russian roulette

The Greenville incident illustrates that under some circumstances, the corrosivity of drinking water can be altered so that it aggressively attacks lead solder. Pieces of solder from the water pipes can then detach sporadically and contaminate the water. This is difficult to monitor because multiple samples can be collected from a tap with relatively low lead, but occasionally a sample can be collected that contains more than 15,000 ppb—as much lead as could be consumed in paint chips. Edwards terms this disconcerting problem "Russian roulette" and says that it explains sampling data collected by EPA and his own research group in D.C., Greenville, and other locations.

"I would like to know how common it is for lead in drinking water to elevate blood lead levels," says Morrow. "We've tried to get parents to bring in their kids. We've tried to get doctors to test all 1- and 2-year-olds. But we've only tested about 45% of the kids, so we just don't know."

Neither Edwards nor any of the experts contacted for this story claim that drinking water is the major source of lead for children nationally. Public-health experts are much more concerned about chips and dust from leaded paint, says Brown. But Edwards has assembled enough evidence to indicate that lead in water can sometimes be a key source of elevated lead in children's blood. And that may be the real lesson of the D.C. water crisis. —REBECCA RENNER

Copyright © 2007 American Chemical Society

Environmental Science & Technology Online News
http://pubs.acs.org/subscribe/journals/esthag-w/2006/aug/science/rr_lead.html

Science News –August 2, 2006

Lead in water linked to coagulant

It's not just chloramines. Coagulants used in drinking-water facilities can create lead problems too.

High levels of lead in drinking water that poisoned a child in Durham, N.C., probably resulted from a change in the coagulant used to remove organic matter, says a corrosion scientist who tested the Durham water. The incident raises the specter of similar undetected problems in other parts of the U.S., says Marc Edwards, a corrosion engineer at Virginia Polytechnic Institute and State University. This case is especially vexing because Durham's routine water-quality monitoring, which is required by the U.S. EPA's Lead and Copper Rule, failed to detect the problem in 2004.

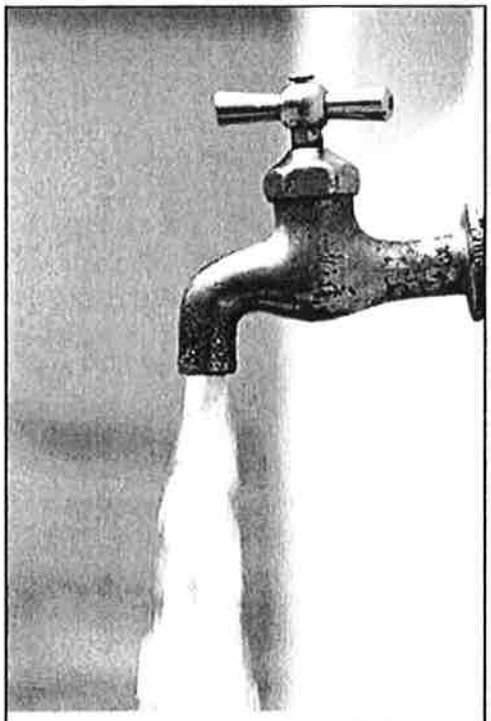

Jupiterimages
Routine monitoring missed Durham, N.C.'s lead problem.

Since the 2004 Washington, D.C., lead crisis [316KB PDF]drew attention to lead in drinking water, a few cities that were once meeting the EPA action limit have developed problems. Durham joins Greenville, N.C., and Stafford, Va., on the list of cities where water-treatment changes enacted to reduce disinfection byproducts have unexpectedly raised lead levels. Until now, the prime suspect for these cases was a switch from free chlorine to chloramines for secondary disinfection—the established cause of D.C.'s problem.

Besides switching to chloramines, all three cities changed from alum or another nonchloride coagulant

to ferric chloride to better remove organic matter and further reduce disinfection byproducts. This change increased the ratio of chloride to sulfate in the drinking water. When this ratio is >~0.58, galvanic corrosion occurs and erodes particles of solder, according to Edwards. This process takes place even when other aspects of the water chemistry—such as pH, alkalinity, and the use of a phosphate-based corrosion inhibitor—should prevent lead contamination of water, he says.

The chloride-to-sulfate ratio was first reported as an important factor in water corrosion in 1983 by scientists in the U.K. Edwards cited their work in a 1999 publication that indicated the ratio could be important at U.S. utilities. A 2005 American Water Works Association report [1.3MB PDF] made passing mention of the ratio. Even so, most corrosion scientists and utilities managers contacted by *ES&T* were unaware of the issue.

In Durham, a doctor spotted the child's elevated blood lead level, >20 μg/dL, during a routine examination this spring. Public-health officials linked the boy's poisoning to drinking water after they found >800 ppb of lead in tap water and no other source of lead in his mother's apartment, according to Durham County health officer Marc Meyer.

Paint, dust, or soil—not water—are generally considered major sources of lead exposure. Lead solder, banned in the mid-1980s, could potentially be a significant source of lead in drinking water, according to Mary Jean Brown, head of the U.S. Centers for Disease Control and Prevention's lead poisoning prevention branch. However, aging processes are thought to deposit various films or scales on top of the solder that protect it from corrosion. "If the aging process does not protect against this, then it would be new," she says.

Plant managers say that the problem is new. After the switch to ferric chloride, Stafford plant manager Harry Critzer watched lead levels climb. After coagulants were changed, the lead levels quickly dropped below the action limit.

Greenville had a similar experience. "We switched to ferric chloride at about the same time as we switched to chloramines," says Greenville plant manager Barrett Lasater. "At first, we thought it was a dissolved-lead problem, so we changed our corrosion inhibitor, but this didn't have much of an effect. EPA, the state regulators, and other consultants didn't know what it was. There is no literature. There are no guidelines."

Most corrosion controls focus on soluble-lead leaching, but this is different. It's about physical processes. "Because these are particles, it means that flow rate is important; the aerator is important," Lasater adds.

Aerators on or off, a seemingly minor detail, could explain why the Durham health department found a problem that the water company missed. The health department sampled with the aerators on. The water company took them off. Although the aerator on/off issue was highlighted in a previous *ES&T* article about sampling in Washington, D.C., schools, where EPA Region 3 agreed to an "aerators off" sampling protocol, disagreement about how to sample still exists. "We want to get a real-world sample that reflects what people are drinking," says Meyer, who advocates leaving the aerators on.

A Region 4 EPA spokesperson tells *ES&T* that the water utility sampled correctly and that the health department's procedure "differed from what's required by regulation," but the spokesperson declined to explain the results. EPA's proposed revisions to the Lead and Copper Rule, released on July 6, are silent on specific sampling issues. The proposals would require utilities to consult with state regulators when contemplating a treatment change that might lead to corrosion.

But on July 26, EPA Office of Water assistant administrator Benjamin Grumbles, in a letter to a Durham, N.C., newspaper, wrote, "The U.S. Environmental Protection Agency does not have stated

guidelines concerning the removal of faucet aerators before testing for lead in drinking water. We were unaware that water-treatment facilities may be making such a recommendation. Since this matter came to our attention, we have begun looking into it to determine whether we need to provide supplemental guidance on the issue. We hope to make that determination soon."

Lasater, who switched coagulant a few months ago, is waiting to see whether the change solves Greenville's lead problem, and Durham's water company is also expected to stop using ferric chloride. North Carolina's experiences have raised awareness of water as a source of elevated blood lead, says Meyer. In Greenville, it took a year to determine that water was responsible for high lead levels in children. In Durham, it took a month. "Prior to Greenville, we didn't sample water when we investigated a home. Now, it's routine," he says. —REBECCA RENNER

Copyright © 2006 American Chemical Society

ERNIE FLETCHER
GOVERNOR

ENVIRONMENTAL AND PUBLIC PROTECTION CABINET
DEPARTMENT FOR ENVIRONMENTAL PROTECTION
DIVISION OF WATER
14 REILLY ROAD
FRANKFORT, KENTUCKY 40601
www.kentucky.gov

TERESA J. HILL
SECRETARY

May 24, 2007

David Shehee
Kentucky American Northern Division
6300 Cedar Creek Ln
Lexington, KY 40515

RE: PWSID# KY0940430
Reduced Monitoring

Dear Mr. Shehee:

Please disregard the letter that was dated May 8, 2006 in which the Division of Water was alerting Kentucky American Northern Division of a recent detection and their need to increase monitoring. The May 8th letter was sent in error and thus the increase to quarterly monitoring is not required.

Required SOC monitoring and status:

A sample on 08/04/2004 from Kentucky American Northern Division (Owenton Water Works) KY0940430 had a detection of 0.0006 mg/L for 2,4-D. Four quarters of monitoring was preformed and Lora Gowins, in an email dated November 2005, approved your system for annual monitoring of 2,4-D in the 3rd quarter. Your system's monitoring schedule has been updated in our database to reflect this third quarter annual monitoring requirement.

Kentucky American Northern Division has since had a detection for 2,4-D on July 12, 2006. This will extend your systems requirement to perform annual monitoring for an extra year. Systems which have three (3) consecutive annual samples, with no detection of a contaminant, may request a further reduction in monitoring.

This may not reflect the entire Synthetic Organic Chemical testing your system is required.

If you have any questions or need further assistance please contact Brian Chitti at (502) 564-3410 ext. 555.

Sincerely,

Brian M. Chitti

Brian Chitti, Compliance Officer
Drinking Water Branch
Division of Water

Drinking Water Files
Frankfort Regional Office

ERNIE FLETCHER
GOVERNOR

ENVIRONMENTAL AND PUBLIC PROTECTION CABINET
DEPARTMENT FOR ENVIRONMENTAL PROTECTION
DIVISION OF WATER
14 REILLY ROAD
FRANKFORT, KENTUCKY 40601
www.kentucky.gov

TERESA J. HILL
SECRETARY

May 8, 2007

David Shehee
Kentucky American Northern Division
6300 Cedar Creek LN
Lexington KY, 40515

RE: PWSID# KY0940430
SOC Detection

Dear Mr. Shehee:

This letter is to inform you of your compliance status as it relates to the required SOC monitoring and reporting requirements. During a recent review of your analytical data, a sample dated July 12, 2006 was reported with a detection of 0.0003 mg/L for 2,4-D. The detection limit for 2,4-D is 0.00022 mg/L.

In accordance to 401 KAR 8:400 Section 1(7), your system is required to begin quarterly monitoring for 2,4-D. Kentucky American Northern Division will be eligible to submit a written request for a reduction in monitoring for 2,4-D after four (4) quarters of monitoring have been reported with all results reliably and consistently below the maximum contaminant level. The monitoring schedule for 2,4-D can not be reduced until Kentucky American Northern Division requests and receives a written approval from the Division of Water.

If you have any questions or need further assistance please contact Brian Chitti at (502) 564-3410 ext. 555.

Sincerely,

Brian M. Chitti

Brian M. Chitti, Compliance Officer
Drinking Water Branch
Division of Water

Drinking Water Files

wqfile

Kentucky American Water

September 16, 2005

Ms. Donna Marlin
Kentucky Department for Environmental Protection
Division of Water, Drinking Water Branch
14 Reilly Road
Frankfort, Kentucky 40601

Subject: Kentucky American Water's Purchase of Owenton City Water Works

Dear Ms Marlin:

This correspondence is to notify you of the purchase of Owenton City Water Works (PWSID 09040337) by Kentucky American Water September 15, 2005. As you know, many changes are necessary as we bring Owenton Water Works into the Kentucky American Water System.

One of the first changes we would like to make is to merge the PWSID number for Owenton Water Works into our existing Northern Division PWSID 0940430. We will work with your compliance staff to ensure sampling site plans for Kentucky American Water's Northern Division, including the newly acquired Owenton Water Works, are revised accordingly.

We also would like to have the population currently in SDWIS for the TriVillage and Owenton system corrected to reflect the census-based population compiled and submitted by Kentucky American Water and approved by the Division of Water in 2000. The correct population for the combined Kentucky American Northern Division system, including the former Elk Lake, Owenton, and Kentucky American's TriVillage system is 8,181.

Thank you for your assistance in making these changes. Please notify me if there are additional actions needed at this time. You may reach me at dshehee@kawc.com, or (859) 335-3660.

Sincerely,

David Shehee
Water Quality Specialist

cc: Nick Rowe
Rick Buchanan
Dillard Griffin
Marshall Gibson
WQ File

RWE GROUP

ENVIRONMENTAL AND PUBLIC PROTECTION CABINET
DEPARTMENT FOR ENVIRONMENTAL PROTECTION

Ernie Fletcher
Governor

Frankfort Office Park
14 Reilly Road
Frankfort, Kentucky 40601
www.kentucky.gov

LaJuana S. Wilcher
Secretary

March 28, 2006

David Shehee
Kentucky American Water
2300 Richmond Rd.
Lexington, KY 40502

Dear Mr. Shehee,

At the March 2006 meeting of the Kentucky Board of Certification of Drinking Water Treatment and Water Distribution System Operators your training request was reviewed.

Course Title	Approval Status	Hours & Type	DCA Event ID #
Laboratory Training	Approved	5.5 drinking water	4066

The roster was attached to your request. The hours will be added to the attendee's electronic training database. Please refer to the DCA Event ID number in future correspondence regarding this course.

If you have any questions or need additional information, please contact the Division of Compliance Assistance, Operator Certification at (502) 564-0323.

Sincerely,

Lisa Butler

Lisa Butler
Program Coordinator
Operator Certification

ENVIRONMENTAL AND PUBLIC PROTECTION CABINET
DEPARTMENT FOR ENVIRONMENTAL PROTECTION

Ernie Fletcher
Governor

Division of Water
14 Reilly Road
Frankfort, Kentucky 40601-1190
www.kentucky.gov

LaJuana S. Wilcher
Secretary

February 17, 2006

Mr. David Shehee
Owenton Water Treatment Plant
c/o Kentucky-American Water Company
6300 Cedar Creek Lane
Lexington, Kentucky 40515

RE: PWSID #0940430
Chemical Change

Dear Mr. Shehee:

This is to authorize the Owenton water treatment plant's use of the Brenntag 38% sulfuric acid for pH adjustment. The product is NSF-approved to a maximum dosage of 121 mg/L. It is recommended that the caustic feed point after the Claricone be located such to provide sufficient mix time in order to raise the pH to precipitate out the manganese prior to filtration.

If you have any questions, I can be reached at 502/564-2225, extension535.

Sincerely,

Julie W. Roney

Julie W. Roney, Supervisor
Technical Assistance and Outreach
Drinking Water Branch
Division of Water

C: Florence Regional Office
Drinking Water Files

ENVIRONMENTAL AND PUBLIC PROTECTION CABINET
DEPARTMENT FOR ENVIRONMENTAL PROTECTION

Ernie Fletcher
Governor

Division of Water
14 Reilly Road
Frankfort, Kentucky 40601-1190
www.kentucky.gov

LaJuana S. Wilcher
Secretary

January 31, 2006

Mr. David Shehee
Owenton Water Treatment Plant
c/o Kentucky-American Water Company
6300 Cedar Creek Lane
Lexington, Kentucky 40515

RE: PWSID #0940430
Chemical Change

Dear Mr. Shehee:

This is to authorize the Owenton water treatment plant's use of the Nalco polymer 7766 for coagulation and sludge blanket maintenance. The product is NSF-approved to a maximum dosage of 1 mg/L.

If you have any questions, I can be reached at 502/564-2225, extension535.

Sincerely,

Julie W. Roney

Julie W. Roney, Supervisor
Technical Assistance and Outreach
Drinking Water Branch
Division of Water

C: Frankfort Regional Office
Drinking Water Files

ENVIRONMENTAL AND PUBLIC PROTECTION CABINET
DEPARTMENT FOR ENVIRONMENTAL PROTECTION

Ernie Fletcher
Governor

Division of Water
14 Reilly Road
Frankfort, Kentucky 40601-1190
www.kentucky.gov

LaJuana S. Wilcher
Secretary

January 31, 2006

Mr. David Shehee
Owenton Water Treatment Plant
c/o Kentucky-American Water Company
6300 Cedar Creek Lane
Lexington, Kentucky 40515

RE: PWSID #0940430
Chemical Change

Dear Mr. Shehee:

This is to authorize the Owenton water treatment plant's use of the Nalco polymer 7766 for coagulation and sludge blanket maintenance. The product is NSF-approved to a maximum dosage of 1 mg/L.

If you have any questions, I can be reached at 502/564-2225, extension535.

Sincerely,

Julie W. Roney

Julie W. Roney, Supervisor
Technical Assistance and Outreach
Drinking Water Branch
Division of Water

C: Frankfort Regional Office
Drinking Water Files

Kentucky American Water

November 15, 2005

Mr. Tina Bailey
Kentucky Department for Environmental Protection
Division of Water, KPDES Branch
14 Reilly Road
Frankfort, Kentucky 40601

Subject: Kentucky American Water's Purchase of Owenton City Water Works

Dear Ms Bailey:

Kentucky American Water purchased Owenton City Water Works (PWSID 0940337) water and wastewater plants September 15, 2005. Enclosed are the required Change of Ownership forms to transfer their permits to Kentucky American Water.

Thank you for your assistance in making these changes. Please notify me if there are additional actions required. You may reach me at dshehee@kawc.com, or (859) 335-3660.

Sincerely,

David Shehee
Water Quality Supervisor

cc: Nick Rowe
Rick Buchanan
Dillard Griffin
Herb Miller
Marshall Gibson
WQ File

CHANGE IN OWNERSHIP CERTIFICATION

Facility Name	NPDES No.
Kentucky American Water - Northern Division STP	KY0028312
Previous Name (if changed)	County
Owenton City Water Works	Owen

I hereby certify that I will assume ownership and all responsibility for meeting the permit conditions of the Commonwealth of Kentucky relating to water quality at the permitted facility listed above on the effective date indicated.

Name of New Owner or Authorized Representative	Kentucky - American Water Company
Company Name	Kentucky - American Water Company
Address of New Owner (Street, City, State, Zip Code)	2300 Richmond Road, Lexington, Kentucky, 40502
Telephone No. of Owner/Authorized Representative	(859) 268 - 6339
Location Address of Facility	102 Main Street, Owenton, Kentucky 40359
Effective Date of Transfer	9/15/05
Previous Owner Name	Owenton Water Works

Indicate the address where the Discharge Monitoring Report (DMR) forms should be sent. **(Complete only if different from owner name and address listed above.)** These DMR forms are preprinted with permit limitations and mailed out each quarter (semi-annually for individual residences).

Alternate DMR Mailing Name	Marshall Gibson
Alternate DMR Mailing Address	102 Main Street Owenton, Kentucky 40359

Signature of New Owner or Authorized Representative	Date
Stuart A. Mills, Vice-President	11/11/05

Acknowledged before me this 11th day of November, 2005

Notary Public Patricia Ballard Commission Expires: Jan. 28, 2008

Notary Seal

Questions on completing this form? Contact the KPDES Branch at (502) 564-3410.

Complete and return this form to: Division of Water, KPDES Branch
Frankfort Office Park
14 Reilly Road
Frankfort, KY 40601

CHANGE IN OWNERSHIP CERTIFICATION

Facility Name	NPDES No.
Kentucky American Water - Northern Division WTP	#0863
Previous Name (if changed)	County
Owenton City Water Works	Owen

I hereby certify that I will assume ownership and all responsibility for meeting the permit conditions of the Commonwealth of Kentucky relating to water quality at the permitted facility listed above on the effective date indicated.

Name of New Owner or Authorized Representative	Kentucky - American Water Company
Company Name	Kentucky - American Water Company
Address of New Owner (Street, City, State, Zip Code)	2300 Richmond Road, Lexington, Kentucky, 40502
Telephone No. of Owner/Authorized Representative	(859) 268 - 6339
Location Address of Facility	102 Main Street, Owenton, Kentucky 40359
Effective Date of Transfer	9/15/05
Previous Owner Name	Owenton Water Works

Indicate the address where the Discharge Monitoring Report (DMR) forms should be sent. **(Complete only if different from owner name and address listed above.)** These DMR forms are preprinted with permit limitations and mailed out each quarter (semi-annually for individual residences).

Alternate DMR Mailing Name	NA
Alternate DMR Mailing Address	NA

Signature of New Owner or Authorized Representative	Date
Vice-President	11/11/05

Acknowledged before me this 11th day of November, 2005

Notary Public Patricia Ballard Commission Expires: Jan. 28, 2008

Notary Seal

Questions on completing this form? Contact the KPDES Branch at (502) 564-3410.

Complete and return this form to: Division of Water, KPDES Branch
Frankfort Office Park
14 Reilly Road
Frankfort, KY 40601

Steven L. Beshear
Governor

ENERGY AND ENVIRONMENT CABINET

Department for Environmental Protection
Division of Water
200 Fair Oaks Lane
4th Floor
Frankfort, Kentucky 40601
Phone: (502) 564-3410
Fax: (502) 564-2741
www.water.ky.gov

Leonard K. Peters
Secretary

R. Bruce Scott
Commissioner

October 26, 2010

David Shehee
Kentucky American Northern Division
6300 Cedarcreek Lane
Lexington, KY 40515

RE: PWSID# KY0940430
Reduced Monitoring

Dear Mr. Shehee:

A review of our records indicates the following compliance status.

Required SOC monitoring and status:

A sample on 8/4/2004 from Kentucky American Northern Division had a detection of 0.0006 mg/L for 2,4-D. Your system was required to complete three (3) consecutive annual samples of monitoring for 2,4-D with all results below the detect level. These were taken on 8/3/2010; 8/11/2009; and 8/14/2008.

Based on these results permission is granted to return to regular group monitoring for 2,4-D. 2,4-D must be sampled in two (2) consecutive quarters every three (3) year cycle beginning 01/01/2011.

This may not reflect the entire Synthetic Organic Chemical testing your system is required.

If you have any questions or need further assistance please contact Arianna Lageman at (502) 564-3410 ext. 4818 or at Arianna.Lageman@ky.gov.

Sincerely,

Arianna P. Lageman
Compliance Officer
Division of Water

ERNIE FLETCHER
GOVERNOR

ENVIRONMENTAL AND PUBLIC PROTECTION CABINET
DEPARTMENT FOR ENVIRONMENTAL PROTECTION
DIVISION OF WATER
14 REILLY ROAD
FRANKFORT, KENTUCKY 40601
www.kentucky.gov

TERESA J. HILL
SECRETARY

April 12, 2007

David Shehee
Kentucky American Northern Division
6300 Cedar Creek Ln
Lexington, KY 40515

RE: PWSID# KY0940430
Reduced Monitoring

Dear Mr. Shehee:

A review of our records indicates the following compliance status.

Required SOC monitoring and status:

A sample on February 03, 2003 from Kentucky American Northern Division (previously Owenton City Water Works) had a detection of .0015 mg/L for Di(2-Ethylhexyl)Phthalate. Your system was required to do four (4) consecutive quarters of monitoring for Di(2-Ethylhexyl)Phthalate with all results reliably and consistently below the maximum contaminant level. These were taken on 05/05/2003; 08/04/2003; 12/30/2003; & 02/02/2004. Kentucky American Northern Division has subsequently taken three annual samples on 03/16/2005; 02/08/2006 & 02/23/2006; and 02/19/2007.

Based on these results permission is granted to return to the regular monitoring schedule for Di(2-Ethylhexyl)Phthalate. Di(2-Ethylhexyl)Phthalate can be sampled on the regular SOC monitoring cycle. Regular monitoring for SOCs is two quarterly samples in one calendar year of a three year compliance period.

This may not reflect the entire Synthetic Organic Chemical testing your system is required.

If you have any questions or need further assistance please contact Brian Chitti at (502) 564-3410 ext. 555.

Sincerely,

Brian M. Chitti

Brian M. Chitti, Compliance Officer
Drinking Water Branch
Division of Water

Drinking Water Files
Florence Regional Office

ERNIE FLETCHER
GOVERNOR

ENVIRONMENTAL AND PUBLIC PROTECTION CABINET
DEPARTMENT FOR ENVIRONMENTAL PROTECTION
DIVISION OF WATER
14 REILLY ROAD
FRANKFORT, KENTUCKY 40601
www.kentucky.gov

TERESA J. HILL
SECRETARY

May 8, 2007

David Shehee
Kentucky American Northern Division
6300 Cedar Creek LN
Lexington KY, 40515

RE: PWSID# KY0940430
SOC Detection

Dear Mr. Shehee:

This letter is to inform you of your compliance status as it relates to the required SOC monitoring and reporting requirements. During a recent review of your analytical data, a sample dated July 12, 2006 was reported with a detection of 0.0003 mg/L for 2,4-D. The detection limit for 2,4-D is 0.00022 mg/L.

In accordance to 401 KAR 8:400 Section 1(7), your system is required to begin quarterly monitoring for 2,4-D. Kentucky American Northern Division will be eligible to submit a written request for a reduction in monitoring for 2,4-D after four (4) quarters of monitoring have been reported with all results reliably and consistently below the maximum contaminant level. The monitoring schedule for 2,4-D can not be reduced until Kentucky American Northern Division requests and receives a written approval from the Division of Water.

If you have any questions or need further assistance please contact Brian Chitti at (502) 564-3410 ext. 555.

Sincerely,

Brian M. Chitti

Brian M. Chitti, Compliance Officer
Drinking Water Branch
Division of Water

Drinking Water Files

ERNIE FLETCHER
GOVERNOR

ENVIRONMENTAL AND PUBLIC PROTECTION CABINET
DEPARTMENT FOR ENVIRONMENTAL PROTECTION
DIVISION OF WATER
14 REILLY ROAD
FRANKFORT, KENTUCKY 40601
www.kentucky.gov

TERESA J. HILL
SECRETARY

May 24, 2007

David Shehee
Kentucky American Northern Division
6300 Cedar Creek Ln
Lexington, KY 40515

RE: PWSID# KY0940430
Reduced Monitoring

Dear Mr. Shehee:

Please disregard the letter that was dated May 8, 2006 in which the Division of Water was alerting Kentucky American Northern Division of a recent detection and their need to increase monitoring. The May 8th letter was sent in error and thus the increase to quarterly monitoring is not required.

Required SOC monitoring and status:

A sample on 08/04/2004 from Kentucky American Northern Division (Owenton Water Works) KY0940430 had a detection of 0.0006 mg/L for 2,4-D. Four quarters of monitoring was preformed and Lora Gowins, in an email dated November 2005, approved your system for annual monitoring of 2,4-D in the 3rd quarter. Your system's monitoring schedule has been updated in our database to reflect this third quarter annual monitoring requirement.

Kentucky American Northern Division has since had a detection for 2,4-D on July 12, 2006. This will extend your systems requirement to perform annual monitoring for an extra year. Systems which have three (3) consecutive annual samples, with no detection of a contaminant, may request a further reduction in monitoring.

This may not reflect the entire Synthetic Organic Chemical testing your system is required.

If you have any questions or need further assistance please contact Brian Chitti at (502) 564-3410 ext. 555.

Sincerely,

Brian M. Chitti

Brian Chitti, Compliance Officer
Drinking Water Branch
Division of Water

Drinking Water Files
Frankfort Regional Office

ENVIRONMENTAL AND PUBLIC PROTECTION CABINET
DEPARTMENT FOR ENVIRONMENTAL PROTECTION

Ernie Fletcher
Governor

Division of Water
14 Reilly Road
Frankfort, Kentucky 40601-1190
www.kentucky.gov

Teresa J. Hill
Secretary

November 9, 2007

Mr. David Shehee
KAWC/Northern Division
6300 Cedar Creek Lane
Lexington, Kentucky 40515

RE: PWSID #0940430
Chemical Change

Dear Mr. Shehee:

This is to authorize the KAWC/Northern Division water treatment plant's use of the Nalco polyDADMAC polymer Catfloc TL as a filtration aid. The product is NSF-approved to a maximum dosage of 50 mg/L.

If you have any questions, I can be reached at 502/564-8158, extension 535.

Sincerely,

Julie W. Roney

Julie W. Roney, Supervisor
Technical Assistance and Outreach
Drinking Water Branch
Division of Water

ENVIRONMENTAL AND PUBLIC PROTECTION CABINET
DEPARTMENT FOR ENVIRONMENTAL PROTECTION

Ernie Fletcher
Governor

Division of Water
14 Reilly Road
Frankfort, Kentucky 40601-1190
www.kentucky.gov

Teresa J. Hill
Secretary

April 30, 2007

Mr. David Shehee
KAWC/Northern Division
6300 Cedar Creek Lane
Lexington, Kentucky 40515

RE: PWSID #0940430
Chemical Change

Dear Mr. Shehee:

This is to authorize the KAWC/Northern Division water treatment plant's use of the Applied Specialties' ferric chloride polymer blend AS2814 and Nalco's polyacrylamide POL-E-Z 675 for coagulation purposes. The products are NSF-approved to maximum dosages of 263 and 3.5 mg/L, respectively.

If you have any questions, I can be reached at 502/564-2225, extension535.

Sincerely,

Julie W. Roney

Julie W. Roney, Supervisor
Technical Assistance and Outreach
Drinking Water Branch
Division of Water

ERNIE FLETCHER
GOVERNOR

ENVIRONMENTAL AND PUBLIC PROTECTION CABINET
DEPARTMENT FOR ENVIRONMENTAL PROTECTION
DIVISION OF WATER
14 REILLY ROAD
FRANKFORT, KENTUCKY 40601
www.kentucky.gov

TERESA J. HILL
SECRETARY

December 21, 2006

Mr. David Shehee
KAWC/Northern Division
6300 Cedar Creek Lane
Lexington, Kentucky 40515

RE: PWSID #0940430
Chemical Change

Dear Mr. Shehee:

This is to authorize the KAWC/Northern Division water treatment plant's use of the Delta Chemical polyaluminum chloride DelPac 2020 for coagulation and filter aid purposes. The product is NSF-approved to a maximum dosage of 250 mg/L.

If you have any questions, I can be reached at 502/564-2225, extension535.

Sincerely,

Julie W. Roney

Julie W. Roney, Supervisor
Technical Assistance and Outreach
Drinking Water Branch
Division of Water

C: Florence Regional Office
Drinking Water Files

ERNIE FLETCHER
GOVERNOR

ENVIRONMENTAL AND PUBLIC PROTECTION CABINET
DEPARTMENT FOR ENVIRONMENTAL PROTECTION
DIVISION OF WATER
14 REILLY ROAD
FRANKFORT, KENTUCKY 40601
www.kentucky.gov

TERESA J. HILL
SECRETARY

May 24, 2007

David Shehee
Kentucky American Northern Division
6300 Cedar Creek Ln
Lexington, KY 40515

RE: PWSID# KY0940430
Reduced Monitoring

Dear Mr. Shehee:

Please disregard the letter that was dated May 8, 2006 in which the Division of Water was alerting Kentucky American Northern Division of a recent detection and their need to increase monitoring. The May 8th letter was sent in error and thus the increase to quarterly monitoring is not required.

Required SOC monitoring and status:

A sample on 08/04/2004 from Kentucky American Northern Division (Owenton Water Works) KY0940430 had a detection of 0.0006 mg/L for 2,4-D. Four quarters of monitoring was preformed and Lora Gowins, in an email dated November 2005, approved your system for annual monitoring of 2,4-D in the 3rd quarter. Your system's monitoring schedule has been updated in our database to reflect this third quarter annual monitoring requirement.

Kentucky American Northern Division has since had a detection for 2,4-D on July 12, 2006. This will extend your systems requirement to perform annual monitoring for an extra year. Systems which have three (3) consecutive annual samples, with no detection of a contaminant, may request a further reduction in monitoring.

This may not reflect the entire Synthetic Organic Chemical testing your system is required.

If you have any questions or need further assistance please contact Brian Chitti at (502) 564-3410 ext. 555.

Sincerely,

Brian M. Chitti

Brian Chitti, Compliance Officer
Drinking Water Branch
Division of Water

Drinking Water Files
Frankfort Regional Office

ERNIE FLETCHER
GOVERNOR

ENVIRONMENTAL AND PUBLIC PROTECTION CABINET
DEPARTMENT FOR ENVIRONMENTAL PROTECTION
DIVISION OF WATER
14 REILLY ROAD
FRANKFORT, KENTUCKY 40601
www.kentucky.gov

TERESA J. HILL
SECRETARY

May 8, 2007

David Shehee
Kentucky American Northern Division
6300 Cedar Creek LN
Lexington KY, 40515

RE: PWSID# KY0940430
SOC Detection

Dear Mr. Shehee:

This letter is to inform you of your compliance status as it relates to the required SOC monitoring and reporting requirements. During a recent review of your analytical data, a sample dated July 12, 2006 was reported with a detection of 0.0003 mg/L for 2,4-D. The detection limit for 2,4-D is 0.00022 mg/L.

In accordance to 401 KAR 8:400 Section 1(7), your system is required to begin quarterly monitoring for 2,4-D. Kentucky American Northern Division will be eligible to submit a written request for a reduction in monitoring for 2,4-D after four (4) quarters of monitoring have been reported with all results reliably and consistently below the maximum contaminant level. The monitoring schedule for 2,4-D can not be reduced until Kentucky American Northern Division requests and receives a written approval from the Division of Water.

If you have any questions or need further assistance please contact Brian Chitti at (502) 564-3410 ext. 555.

Sincerely,

Brian M. Chitti

Brian M. Chitti, Compliance Officer
Drinking Water Branch
Division of Water

Drinking Water Files

STEVEN L. BESHEAR
GOVERNOR

LEONARD K. PETERS
SECRETARY

ENERGY AND ENVIRONMENT CABINET
DEPARTMENT FOR ENVIRONMENTAL PROTECTION
DIVISION OF WATER
200 FAIR OAKS LANE, 4TH FLOOR
FRANKFORT KENTUCKY 40601
www.kentucky.gov

August 12, 2010

Mr. David Shehee
Kentucky American Northern Division
6300 Cedarcreek Lane
Lexington, KY 40515

RE: AI: 34054
PWSID: KY0940430
Drinking Water Sanitary Survey

Dear Mr. Shehee:

The Division of Water conducted a Surface Water Producer Sanitary Survey (attached) of the Kentucky American Northern Division on June 29 and August 9, 10 and 11, 2010. A Capacity Development assessment was done as part of the survey.

Non Significant (written response within 90 days must address deficiencies as resolved or provide a corrective action plan; November 11, 2010)

- There are no day tanks associated with bulk liquid treatment chemical processes.
- There is no secondary containment for the treatment chemical processes.
- The overflow piping does not extend greater than 10 feet from the base of the following distribution storage tanks: Sparta, Bromley, Wheatley, Monterey, Hessler, Fairgrounds, Perry Street, and Long Ridge.
- The screen was missing from Hessler tank overflow piping.

The Division Recommends:

- System should inspect and paint the Fairgrounds tank.
- System should make the Emergency Response Plan available to all staff.
- System should install flow meters on the filters.

All deficiency responses should be sent to the attention of Noah Taylor, Compliance and Technical Assistance Branch, Division of Water, 200 Fair Oaks Lane, 4th Floor, Frankfort, KY 40601 (phone 502/564-8158, extension 4978).

Assistance with the "Managerial and Financial Assessment" section of the sanitary survey for Kentucky American Northern Division can be obtained by contacting Brooke Gray in the Water Infrastructure Branch at 502/564-8158, extension 4843.

If you have any questions regarding the "Technical Inspection" portion, contact Jeff Malsi in the Florence Regional Office at (859) 525-4923.

Sincerely,

Noah Taylor
Environmental Technologist III
Division of Water

C: Florence Regional Office

KENTUCKY DEPARTMENT FOR ENVIRONMENTAL PROTECTION
DIVISION OF WATER

Drinking Water Sanitary Survey

Managerial and Financial Assessment of Surface Water & Groundwater Systems

PWS ID: KY0940430
Agency Interest Number: 34054
AI Name: Kentucky American Northern Division
County: Owen
Regional Office: Florence
Capacity Development Inspection Date(s): 6/29/10

SYSTEM CONTACT INFORMATION			
Full Name: David Shehee	Title: Water Quality Supervisor	E-Mail Address: david.shehee@amwater.com	
Phone Number: (859) 335—3360 Ext.	FAX Number: (859) 335—3388		
Mailing Address: 2300 Richmond Rd. Physical Address of Office: 102 N. Main St., Owenton, KY	City: Lexington	State: KY	Zip Code: 40502

WATER TREATMENT PLANT INFORMATION		
Plant Contact Person: Rick Buchanan	Phone Number: (859) 537—0740 Ext.	
Physical Street Address: 102 N. Main St.	City: Owenton	
Plant Type: C (community)	Plant Class: III (500,000-3,000,000 gpd)	Plant Capacity: 1.44 MGD 1,000 GPM

DISTRIBUTION SYSTEM INFORMATION	
Distribution Contact Person: Rick Buchanan	Phone Number: (859) 537—0740 Ext.
Distribution Class: IID-Pop. 1500-15,000	System Service Connections (meters): 3446
System Population Served Calculated: 10235	System Population Served Reported: 8181
Meters Served Outside Your System: 0	Consecutive Systems Population Served Calculated: N/A

WATER PURCHASED, SOLD, & EMERGENCY CONNECTIONS

WATER PURCHASED FROM: ☐ Not Applicable			Number of Master Meters	Amount Monthly (average)	Amount Available by Contract (monthly)
SYSTEM NAME	PWS ID #	AI #			
CARROLL CO WATER DISTRICT #1	KY0210066	694	1	1,602,890	2,250,000
GALLATIN COUNTY WATER DISTRICT	KY0390130	33880	1	674,333	1,500,000
GEORGETOWN MUNICIPAL WATER SERVICE	KY1050157	3906	2	0	1,500,000

WATER SOLD TO: ☒ Not Applicable			Number of Master Meters	Amount Monthly (average)	Amount Available by Contract (monthly)
SYSTEM NAME	PWS ID #	AI #			

COMMENTS:					

I. OPERATOR COMPLIANCE

Are operators cross-trained (by shift, by plant, with distribution, with maintenance, etc)?	Yes ☒ No ☐ N/A ☐
Do you have contingency plans for replacing retiring system personnel?	Yes ☒ No ☐ N/A ☐
Who provides training/technical assistance for license renewal? (✓ all that apply): ☒ AWWA ☐ DCA ☐ DOW ☒ KRWA ☒ KWWOA ☐ RCAP ☒ Other In-House	
What type of training is typically obtained? (✓ all that apply): ☒ REGULATIONS ☒ SAFETY ☒ UMI ☒ WATER QUALITY	
Does the system pay for registration, lodging and meals?	Yes ☒ No ☐ N/A ☐
Does the system allow operators to attend training on company time?	Yes ☒ No ☐ N/A ☐

	Water Treatment Plant	Distribution System
Length of each shift:	8 or 16 hours	8 hours
Number of operators per shift:	1	1
How are weekends covered?	In schedule	On-call
How are holidays covered?	In schedule	On-call

Do operators leave the water plant property while the plant is producing water?	Yes ☐ No ☒ N/A ☐
How long are the operators typically away from the plant? N/A	
What duties are they performing when they are away from the plant? N/A	

OPERATOR CERTIFICATION

Is the system staffed with appropriately certified operators? (Verify certification with DCA.) Yes ☒ No ☐ N/A ☐

LICENSEE NAME	LICENSEE AI #	LICENSE ID	LICENSE TYPE
Richard A. Buchanan	32511	1704	DW Treatment IVA
Terry Kincaid	31671	1526	DW Treatment IIIA
Terry Kincaid	31671	3470	DW Distribution IID
Bobby E. Obanion	30954	20465	DW Treatment IVA
David B. Clifton	32503	1703	DW Treatment IIIA
David B. Clifton	32503	3686	DW Distribution IIID
Martin E. Olson	107580	20376	DW Treatment IIIA
			DW CHOOSE ONE CHOOSE ONE
			DW CHOOSE ONE CHOOSE ONE
			DW CHOOSE ONE CHOOSE ONE
			DW CHOOSE ONE CHOOSE ONE
			DW CHOOSE ONE CHOOSE ONE
			DW CHOOSE ONE CHOOSE ONE

			DW CHOOSE ONE CHOOSE ONE
			DW CHOOSE ONE CHOOSE ONE
COMMENTS:			

II. MONITORING, REPORTING & DATA VERIFICATION

(Part A must be completed for all water systems. Part B must be completed for groundwater systems only.)

PART A
(Complete for all water systems.)

REPORTING ITEM – Information gathered from DWW	RETENTION TIME			
Bacteriological – 9 per month (See DWW)	5 Years	Yes ☒	No ☐	N/A ☐
Chlorine/Chloramines – Free chlorine monthly with BACTs, daily for MORs, residual chlorine monthly	10 Years	Yes ☒	No ☐	N/A ☐
C-T Profiling Data	See if doing/min 1 year	Yes ☒	No ☐	N/A ☐
Individual Filter Turbidity Data (Other than MOR)	3 Years	Yes ☒	No ☐	N/A ☐
MORs – Monthly (Turbidity Analysis)	1 Year	Yes ☒	No ☐	N/A ☐
Lead & Copper – 20 every 3 years (June to September)	12 Years	Yes ☒	No ☐	N/A ☐
Nitrate – Annually	10 Years	Yes ☒	No ☐	N/A ☐
Nitrite – 1 sample in the 1st 3 years of the 9 year compliance cycle	10 Years	Yes ☒	No ☐	N/A ☐
Secondary/Corrosivity – Annually	10 Years	Yes ☒	No ☐	N/A ☐
Sodium – annually; can be with SECs	10 Years	Yes ☒	No ☐	N/A ☐
IOCs (Inorganic Chemicals) – Annually	10 Years	Yes ☒	No ☐	N/A ☐
SOCs (Synthetic Organic Compounds) – >3300, 2 quarterly samples in 12 consecutive months in 3 years.	10 Years	Yes ☒	No ☐	N/A ☐
VOCs (Volatile Organic Chemicals) – Annually	10 Years	Yes ☒	No ☐	N/A ☐
TOCs (Total Organic Carbon) – Monthly, Raw TOC/Alkalinity & CFE TOC	10 Years	Yes ☒	No ☐	N/A ☐
TTHMs & HAA's 4 per quarter (see DWW)	10 Years	Yes ☒	No ☐	N/A ☐
Asbestos – 1 sample in the 1st 3 years of the 9 year compliance cycle (SOC) *Check for Waiver (only purchasers can have waiver)*	Begin 2011/2013	Yes ☒	No ☐	N/A ☐
RADs (Radionuclides) – Every 6 years	See if conducting	Yes ☒	No ☐	N/A ☐
LT2 Cryptosporidium and E.coli Plan – 3 years after bin classification (see rule - first one is April 2009)	3 Years	Yes ☒	No ☐	N/A ☐
LT2 Source Water Monitoring Avoidance	3 Years	Yes ☒	No ☐	N/A ☐
LT2 Toolbox Treatment Monitoring Results	3 Years	Yes ☒	No ☐	N/A ☐
Stage 2 IDSE Sampling Plan or 40/30 Certification	10 years	Yes ☒	No ☐	N/A ☐
Stage 2 IDSE Report	10 years	Yes ☒	No ☐	N/A ☐
Bromate (Only used on systems treating with Ozone)	10 Years	Yes ☐	No ☐	N/A ☒
Chlorine Dioxide	10 Years	Yes ☐	No ☐	N/A ☒
Chlorite (Only used on systems treating with Chlorine Dioxide)	10 Years	Yes ☐	No ☐	N/A ☒

Dioxin – w/SOCs if required *Check for Waiver*	10 Years	Yes ☐	No ☐	N/A ☒
Data Summaries (if actual data not retained)	12 Years	Yes ☐	No ☐	N/A ☒
NOVs (Notices of Violation)	10 Years	Yes ☒	No ☐	N/A ☐
Sanitary Surveys (every 3 years)	10 Years	Yes ☒	No ☐	N/A ☐
CCR (Consumer Confidence Report) – Annually by July 1 (by April 1 to consecutive systems)	Current one on file	Yes ☒	No ☐	N/A ☐
Does the system maintain a current sampling plan for BacTs?	Date updated 11/12/09	Yes ☒	No ☐	N/A ☐
Does the system maintain a current sampling plan for LCR?	Date updated 11/12/09	Yes ☒	No ☐	N/A ☐
Does the system maintain a current sampling plan for DBPs?	Date updated 11/12/09	Yes ☒	No ☐	N/A ☐
Does the system have an up-to-date map of distribution assets? (Map shall show a minimum of all line sizes, cutoff valves, fire hydrants, flush hydrants, tanks, booster pumps, chlorination stations, connections to emergency or alternative sources, wholesale customer master meters, & the type of piping material in the distribution system and its location.)	Date updated 2006	Yes ☒	No ☐	N/A ☐

PART B *(Complete for groundwater systems only.)* ☒ Not Applicable				
GWR Corrective Action	10 years	Yes ☐	No ☐	N/A ☐
GWR Public Notices	3 years	Yes ☐	No ☐	N/A ☐
GWR Fecal-positive invalidation	5 years	Yes ☐	No ☐	N/A ☐
GWR State-specified minimum disinfectant residual	10 years	Yes ☐	No ☐	N/A ☐
GWR Lowest daily disinfectant residual level	5 years	Yes ☐	No ☐	N/A ☐
GWR Date and duration of time less than minimum daily disinfectant residual level	5 years	Yes ☐	No ☐	N/A ☐
GWR Records of state-specific compliance requirements for membrane filtration and alternative treatment	5 years	Yes ☐	No ☐	N/A ☐

Does the system maintain compliance records as required? (answer for both Parts A & B)	Yes ☐	No ☐	N/A ☐
COMMENTS: System purchases from Gallatin Co. and Carroll Co. groundwater systems, both of which operate under triggered monitoring. System notifies these groundwater systems if there are high monitoring results, and the groundwater systems will proceed with triggered monitoring.			

III. MANAGEMENT & OPERATIONS

What professional organizations does the water system belong to? KRWA, AWWA, KWWOA			
Is the system subject to Public Service Commission regulations?	Yes ☒	No ☐	N/A ☐
Does the system attend Water Management Council meetings of the Area Development District?	Yes ☐	No ☒	N/A ☐
Does the system have a governing entity? If not, explain: KAWC Board of Directors	Yes ☒	No ☐	N/A ☐
How often does this body meet? Monthly			
Do operators attend these meetings?	Yes ☐	No ☒	N/A ☐
Is the governing entity provided with documented information regarding technical, managerial, and financial operations of the water system? (Inspect)	Yes ☒	No ☐	N/A ☐

Is the governing entity familiar with water treatment?	Yes ☒	No ☐	N/A ☐
Does the system offer continuing education opportunities for members of the governing entity?	Yes ☒	No ☐	N/A ☐
Does the governing entity visit the water plant? How often? CHOOSE ONE N/A	Yes ☐	No ☒	N/A ☐
Does the system have regular staff meetings? How often? Weekly (Every 2 weeks) Who is involved? Management	Yes ☒	No ☐	N/A ☐
Does the system have a documented strategic plan (mission statement, goals and objectives)? (Inspect)	Yes ☒	No ☐	N/A ☐
Does the system have a defined organizational structure?	Yes ☒	No ☐	N/A ☐
Does the system have a documented description of each job classification with minimum position qualifications? (Inspect)	Yes ☒	No ☐	N/A ☐
Does the system have documented policies and procedures governing human resource management (such as an employee handbook)?	Yes ☒	No ☐	N/A ☐
Does the system periodically review its insurance coverage is in place for liability, property, automobiles, directors, and officers?	Yes ☒	No ☐	N/A ☐
Does the system have a documented policy for delegation of authority such as signing agreements, contracts, resolutions, easements, etc.?	Yes ☒	No ☐	N/A ☐
Does the system have a documented procurement policy for purchasing supplies?	Yes ☒	No ☐	N/A ☐
Does the system have available under a current contract, retainer or other similar arrangement for professional services including engineering, accounting, and legal counsel?	Yes ☒	No ☐	N/A ☐
Does the system have an asset management program?	Yes ☒	No ☐	N/A ☐
Does the system have a documented preventive maintenance program?	Yes ☒	No ☐	N/A ☐
Does the system have a capital improvement plan? (Inspect) How many years does the plan cover? 5, 10, and 20 year.	Yes ☒	No ☐	N/A ☐
Does the system have a documented policy governing water main extensions? (Inspect)	Yes ☒	No ☐	N/A ☐
Are chemicals inventoried? If so, how? Physically, every month.	Yes ☒	No ☐	N/A ☐
Are distribution materials inventoried? If so, how? Annually	Yes ☒	No ☐	N/A ☐
Is there a bid process for chemicals, pipe, or large item purchases?	Yes ☒	No ☐	N/A ☐
Does the system have rules and regulations governing the provision of service? (Inspect)	Yes ☒	No ☐	N/A ☐
Does the system make available in a public place the rules, rates, and regulations? (Inspect)	Yes ☒	No ☐	N/A ☐
Does the system provide 24-hour service response for customers?	Yes ☒	No ☐	N/A ☐
Does the system notify customers prior to performing scheduled maintenance?	Yes ☒	No ☐	N/A ☐
Does the system log customer complaints and track resolution?	Yes ☒	No ☐	N/A ☐
Does the system provide any educational activities to the public? Who is responsible for providing this? Operators and Lexington Office staff What types of educational activities are done? School tours, Open houses, Science fairs.	Yes ☒	No ☐	N/A ☐
Does the system have sufficient O & M manuals? (Inspect) (O & M manuals shall include: a detailed design of the plant, daily operating procedures, a schedule of testing requirements designating who is responsible for the tests, and safety procedures for operation of the facility – including storage and inventory requirements for materials and supplies.) How are the operators made aware of O & M procedures? On the job training and annual training	Yes ☒	No ☐	N/A ☐

Has the system received any NOVs for MCLs in the last 3 years? If yes, answer the following:	Yes ☐	No ☒	N/A ☐
If more than one NOV, were any for the same contaminant?	Yes ☐	No ☐	N/A ☒
Was a public notice issued when required?	Yes ☐	No ☐	N/A ☒
What remedial measures did the system take to prevent future occurrences of these violations? N/A			
Does the system maintain a break log for water main failures? (Inspect)	Yes ☒	No ☐	N/A ☐
Is the system operating at or above 85% of its Rated Design Capacity or using at or above 85% of water available through purchase contracts? (see COW)	Yes ☐	No ☒	N/A ☐
Plant is currently operating at 78% (gpd) and 56.5% (gpm) of its Rated Design Capacity.			
If system's average daily demand (including volume of water specified through contracts) exceeds 85% of total available capacity (including both plant capacity and water available through purchase contracts), does system have a plan for obtaining additional capacity, including cost and timeframes to address the needed additional capacity?	Yes ☐	No ☐	N/A ☒
If applicable, describe plan for obtaining additional capacity: N/A			
COMMENTS: Descriptions of job classifications with minimum position requirements are given to each employee when hired. The company intranet is used to distribute the employee handbook. Policy for delegation of authority is documented electronically. Rules and regulations governing the provision of service are given in a tariff and made available on the internet. The main Lexington office has a group called Government Affairs that participates in PSC training and also provides training for its top 25 customers. Educational information is also provided in the CCR.			

IV. FINANCIAL

Does the system prepare an annual operating budget? (Provide summary)	Yes ☒	No ☐	N/A ☐
Does the system prepare an annual capital budget? (Inspect)	Yes ☒	No ☐	N/A ☐
Who prepares the budget? American Water, Kentucky American, and Kentucky American Northern.			
Do the operators have input into the budget?	Yes ☒	No ☐	N/A ☐
Are training and license funds built into the budget?	Yes ☒	No ☐	N/A ☐
Does the governing entity review and approve the budget?	Yes ☒	No ☐	N/A ☐
Does the system prepare regular monthly reports to show variances between budgeted and actual revenue and expenses? (Inspect)	Yes ☒	No ☐	N/A ☐
Does the system maintain its financial records utilizing the Kentucky Uniform System of Accounting or a comparable system? (Inspect)	Yes ☒	No ☐	N/A ☐
Are financial statements audited by a CPA as required? (Inspect) (Water districts, special districts – i.e. regional water commissions, and cities have specific requirements.)	Yes ☒	No ☐	N/A ☐
If audit is completed, does the governing entity receive and review the audit report?	Yes ☒	No ☐	N/A ☐
Does the system employ a method for depreciation of system assets?	Yes ☒	No ☐	N/A ☐
Is the system operating at a retained earnings surplus? (Retained earnings is the net income that is available at the end of the year and available for transfer.)	Yes ☒	No ☐	N/A ☐
Is the current debt-to-equity ratio below 1.0? (The debt-to equity ratio for any given year is computed by dividing total liabilities by total equity.)	Yes ☒	No ☐	N/A ☐
Does the water system meet a debt coverage ratio needed for bond ordinances, loan agreements, and bond requirements? A typical value is 1.2. (Debt coverage ratio is computed by dividing cash available for debt service (net income with annual interest, depreciation, amortization, and other non-cash items added back) by debt service requirements for the year.)	Yes ☒	No ☐	N/A ☐
Does the water system revenue go to meet other expenses (i.e., electric, sewer or garbage)?	Yes ☐	No ☐	N/A ☒
Is there a documented policy for delinquent accounts?	Yes ☒	No ☐	N/A ☐
What is it? Customer receives letter after 10 days of delinquency; Water is shut off after an average of			

23 days.			
For accounts payable, has the system kept payments less than 45 days past due over the last 12 months?	Yes ☒	No ☐	N/A ☐
Does the system write-off bad debt annually?	Yes ☒	No ☐	N/A ☐
Where does the system typically go for financial assistance? American Water			
Does the system have any long-term debts?	Yes ☒	No ☐	N/A ☐
Is the system current on all debt service payments (if applicable)?	Yes ☒	No ☐	N/A ☐
Is the system meeting reserve account requirements (if applicable)?	Yes ☒	No ☐	N/A ☐
Is there an approved* rate structure in place? (Provide copy of rate sheet.) (*Approved by governing entity/PSC as applicable.)	Yes ☐	No ☒	N/A ☐
What are the dates of the system's last 2 rate increases? 12/07 and 6/09			
Does the system perform a review annually to determine if the rates fully cover the expenses?	Yes ☒	No ☐	N/A ☐
Are long-term needs built into rate increases?	Yes ☒	No ☐	N/A ☐
Do rates promote conservation in time of drought?	Yes ☐	No ☒	N/A ☐

COST OF WATER PRODUCED, PURCHASED AND SOLD

Does the system calculate the cost to produce water?		Yes ☒	No ☐ N/A ☐
Producers	How much does it cost your system to produce 1,000 gallons of water?	$0.40	N/A ☐
Purchasers	What is the highest wholesale price you pay per 1,000 gallons of water?	$1.66	N/A ☐
	What is the lowest wholesale price you pay per 1,000 gallons of water?	$1.40	N/A ☐
Sellers	What is your highest wholesale price which you charge per 1,000 gallons of water?	$_____	N/A ☒
	What is your lowest wholesale price which you charge per 1,000 gallons of water?	$_____	N/A ☒
Does the system track water loss on a monthly basis?		Yes ☒	No ☐ N/A ☐
What was the water loss for the past year? 11% (Report water loss in gallons, as a dollar value, and as a percentage of total water produced/purchased.)			

COMMENTS: Perform variance analyses on budget monthly. All generated revenue goes to one account that is shared with wastewater and other utilities.

V. SECURITY

Does the system have a documented safety policy?	Yes ☒	No ☐	N/A ☐
Does the system provide regular safety training to its employees?	Yes ☒	No ☐	N/A ☐
Is the utility a member of the Local Emergency Planning Council?	Yes ☒	No ☐	N/A ☐
Does the system have an updated emergency response plan that is reviewed annually? (Inspect)	Yes ☒	No ☐	N/A ☐
Does the emergency response plan include a plan for responding to water shortages and loss of service?	Yes ☒	No ☐	N/A ☐
Is the Emergency Response Plan exercised?	Yes ☐	No ☒	N/A ☐
How is the Emergency Response Plan communicated to all employees? Only management is responsible for implementation of the Emergency Response Plan..			
Are there safeguards on water plant operations when operators may be doing work outside on the plant grounds?	Yes ☒	No ☐	N/A ☐
What types of safeguards? SCADA and alarms.			
Does the plant ever disable the telemetry/SCADA system and run on manual?	Yes ☐	No ☒	N/A ☐
Has the system developed procedures for securing computer/SCADA usage?	Yes ☒	No ☐	N/A ☐

Are backup copies of O & M manuals maintained in a location other than the water plant?	Yes ☒	No ☐	N/A ☐
Is the raw water, treatment, distribution, and purchased water source equipped with emergency standby power generation or is there a secondary source of power? (e.g. contracts in place with suppliers for emergency generators or dual electrical feed)	Yes ☐	No ☒	N/A ☐
Are backup emergency generators exercised regularly?	Yes ☐	No ☐	N/A ☒
Is other backup equipment exercised regularly?	Yes ☒	No ☐	N/A ☐
Have arrangements been made with outside contractors, other utilities, etc. to provide needed emergency equipment?	Yes ☒	No ☐	N/A ☐
If the system has an inactive water plant, is the plant exercised to maintain preparedness for emergencies? How often? N/A How is the plant disinfected prior to bringing it back on line? N/A	Yes ☐	No ☐	N/A ☒
Is equipment shared with the wastewater plant? If so, how is the equipment disinfected prior to use at the water plant? N/A	Yes ☐	No ☒	N/A ☐

COMMENTS: System is planning to exercise the Emergency Response Plan in fall 2010. Recommend that the Emergency Response Plan is communicated to all employees and not only management. Water treatment plant is not on SCADA system. Backup equipment is a diesel raw water pump and is exercised monthly.

DOCUMENTATION (✓ all that apply)
☐ Photographs obtained by DEP
☒ Copies of records obtained by DEP
☐ Other documentation

OVERALL COMPLIANCE STATUS		
☒ No Violations Observed		
☐ No Violations Observed – Advisory Action Taken (impending trends)		
☐ Out of Compliance – Verbal Notice Given (non-recurrent deficiency noted or violation corrected at time of inspection)		
☐ Out of Compliance – Verbal Notice Given (recurrent deficiency noted)		
CDPM: Brooke Gray	Title: Environmental Technologist III	Date: 6/29/10

Drinking Water Sanitary Survey

TECHNICAL INSPECTION OF SURFACE WATER PLANT AND DISTRIBUTION SYSTEM OPERATIONS

PWS ID: KY0940430
Agency Interest Number: 34054
AI Name: Kentucky American Northern Division
County: Owen
Regional Office: Florence
WTP Latitude: %%:ai_latitude_mf%% WTP Longitude: %%:ai_longitude_mf%%
CTAB Inspection Date(s): 8/9,10 & 11/2010

TREATMENT PROCESS SUMMARY	
Primary Source: Severn Creek - backwater of KY River Secondary Source: Thomas Lake	Maximum Pumping Rate: 1000 GPM Filter Design Rate (gpm/ft^2): 700
Pre-sedimentation Size: NA	Aeration: N/A
Sedimentation (Primary): Claricone Sedimentation 2: 1)CHOOSE ONE 2)CHOOSE ONE	
Filter (Primary): High Rate/Sand Anthracite Filter 2 (if 2 different filter types): 1)CHOOSE ONE 2)CHOOSE ONE	
Total Clear Well Size (gallons): 285,000	Total Distribution Storage Capacity (gallons): 1,696,000
Does each component of the WTP meet 10 State Standards or has each been approved by the Division of Water? Yes ☒ No ☐	
COMMENTS: Distribution Storage capacity does not include the Glencoe tank which is out of service permanently.	

CHEMICALS SUMMARY	
Pre-Disinfection/Treatment: Chlorine Gas Post-Disinfection: Chlorine Gas	Primary Coagulant: Ferric/Lime/Polymer Secondary Coagulant (Name): Polyaluminum Chlorides/Sulfates
Filter Aid Name: NA	Corrosion Control: N/A
Taste and Odor: Potassium Permanganate	Softening: N/A
Iron and Manganese Removal: Sodium Permanganate	Fluoride Supplement: Hydrofluosilicic Acid
COMMENTS: Sodium permanganate is used at the Severn Creek intake and Potassium Permanganate is used at the Thomas Lake intake.	

PLANT SCHEMATIC *(OPTIONAL)*	
Include a plant schematic indicating the following details. ***Place an "X" in the box to indicate this item is included on the schematic.***	
☐ Source water type/location	☐ Major unit processes (including baffling factors and volumes)
☐ Flow measurement locations	☐ Chemical injection locations

PWS ID Number: KY0940430 **Agency Interest Number:** 34054

☐ Piping Flexibility (including # of raw and finished water mains)	☐ Waste handling

I. SOURCE

SOURCE				
SOURCE NAME	WATER WITHDRAWAL NUMBER	PERMITTED AMOUNT (MGD)	IS CAPACITY ADEQUATE?	ARE THERE WATER QUALITY ISSUES?
Severn Creek	0863	0.8/0.9	Yes ☒ No ☐	Yes ☐ No ☒
Lower Thomas Lake	0874	08/0.9	Yes ☒ No ☐	Yes ☒ No ☐

Upstream land uses (✓ all that apply):
☒ Farmland ☒ Industry ☐ Logging ☐ Mining ☐ Oil and Gas ☒ Recreation ☒ Residential ☐ Other _____

Upstream discharges within 5 miles (✓ all that apply):
☒ Farmland ☒ Industry ☐ Logging ☐ Mining ☐ Oil and Gas ☒ Recreation ☒ Residential
☐ Water/Wastewater Discharge ☐ Other _____

Is there a source water protection plan in place? (Call ADD if no one at plant knows.)	Yes ☒ No ☐
Are there any sources of Cryptosporidium in the watershed? Describe the sources: _____	Yes ☐ No ☒
Is the system drought-vulnerable? (Has the system ever been on water conservation or dealt with a dwindling water source during warm weather?)	Yes ☒ No ☐
Does the system perform both source and finished water quality monitoring as required?	Yes ☒ No ☐

What type of water quality monitoring is done on the source water (✓ all that apply):
☒Alkalinity ☒BacTs ☒Hardness ☒Iron ☒Manganese ☒pH ☒Temperature ☒Turbidity ☐None

If multiple sources are available, is the one in use the "best" in terms of both water quality and quantity?	Yes ☒ No ☐
Are there any factors that have limited the capacity of raw water source(s) with in the last 10 years?	Yes ☒ No ☐
If the capacity of a raw source has been limited within the past 10 years, have the contributing factors already been successfully addressed? If not, explain: _____	Yes ☒ No ☐
Are there any unaddressed factors that have reduced the quality of raw water source(s) in the last 10 years?	Yes ☐ No ☒
If the quality of the raw water source(s) has been reduced within the past 10 years, have the contributing factors already been successfully addressed? If not, explain: _____	Yes ☐ No ☐
Are there any unaddressed factors that have limited the water available for purchase from contracted source(s) in the last 10 years?	Yes ☐ No ☒
If water available for purchase through contracted source(s) has been limited within the past 10 years, have the contributing factors already been successfully addressed? If not, explain: _____	Yes ☐ No ☐

COMMENTS:

INTAKE STRUCTURE					
Location	**Type**	**Number of Inlets**	**Screen Size**	**Is Flooding a Problem?**	**Is Silt Build-up a Problem?**
Severn Creek	Fixed	2	1/4 inch	Yes ☐ No ☒	Yes ☐ No ☒
Lower Thomas	Fixed	2		Yes ☐ No ☒	Yes ☐ No ☒
	CHOOSE ONE			Yes ☐ No ☐	Yes ☐ No ☐
	CHOOSE ONE			Yes ☐ No ☐	Yes ☐ No ☐

Number of raw water mains: 1 which are pumped ☒ or gravity fed ☐
Is raw water flow measured? Yes ☒ No ☐ If yes, when was the meter last calibrated? 9/2006
List any chemicals fed at the source: Potassium Permanganate at Thomas Lake and Sodium Permanganant at Severn Creek.
If source is a reservoir, is it aerated? Yes ☐ No ☒
List depths of intake levels (normal pool): 25 feet
Screens are: stationary ☒ or mechanical ☐
Is screen clogging a problem? Yes ☐ No ☒ How are screens cleaned? _____
Are Zebra mussels a problem? Yes ☐ No ☒ If yes, list actions taken: _____
How often are the submerged portions of the intake inspected? Annually When was the date of the last inspection? Severn Creek was 6/2010
COMMENTS:

II. TREATMENT/PUMPS

PRE-SEDIMENTATION Not Applicable			
CAPACITY (gallons)	FLEXIBILITY TO BYPASS	CHEMICAL FEED CAPABILITY	LIST CHEMICALS FED
	Yes ☐ No ☐	Yes ☐ No ☐	
	Yes ☐ No ☐	Yes ☐ No ☐	
Are treatment chemicals fed at the inlet to the pre-sedimentation basin? Yes ☐ No ☐ If so, is the chemical fed: all the time ☐ or intermittently ☐?			
Is algae growth a problem? Yes ☐ No ☐			
How often are the pre-sedimentation basin(s) cleaned? _____			
COMMENTS:			

AERATION Not Applicable		
TYPE	CAPACITY (gallons)	REASON FOR AERATION
COMMENTS:		

RAPID MIX Inspected			
TYPE	NUMBER	VOLUME (gallons)	PHYSICAL CONDITION
Mechanical Mixer	1	750	Good

List chemicals in the order they are fed at the rapid mix: Carbon, Ferric Chloride, Surfuric Acid	
Is adequate mixing of chemicals taking place?	Yes ☒ No ☐
Are there flow splits after the rapid mix?	Yes ☐ No ☒
If so, is the flow distribution even?	Yes ☒ No ☐
COMMENTS:	

FLOCCULATION BASINS Inspected				
TYPE	TRAINS / STAGES	VARIABLE SPEED DRIVE	VOLUME (gallons)	PHYSICAL CONDITION
Hydraulic	1 Single	Yes ☐ No ☒	71,800	Good
		Yes ☐ No ☐		

List any chemicals fed in the flocculation process: None	
What is the size and appearance of the floc? Size OK & Appearance OK	
How often are flocculation basins cleaned? 1/year	
Are the flocculation speeds tapered (decreased) through the flocculation stages?	Yes ☐ No ☒
Are there flow splits after flocculation?	Yes ☐ No ☒
Is flow distribution even?	Yes ☒ No ☐
COMMENTS: Uses Claricone for both floculation and sedimentation.	

SEDIMENTATION BASINS CHOOSE ONE					
TYPE	TRAINS / STAGES	VOLUME (gallons)	SQ. FT. AREA PER BASIN	% WITH TUBE SETTLERS	PHYSICAL CONDITION
Claricone	1 1	71,800		0	Good

List any chemicals fed in the sedimentation process: Chlorine is fed into discharge weir of Claricone.	
What is the sedimentation turbidity goal? <=2.0 NTU	
What is the overflow rate of the basins? NA	
If system has an Actiflo process, what is the rise rate? NA	
How often are the basins cleaned? 1/year	
How often is sludge removed from the basins? Daily Sludge removal is: Mechanical ☐ or Manual ☒ What was the sludge depth at the time of this inspection? Not Inspected	
What was the settled water turbidity at the time of this inspection? 0.632	
Is there evidence of short-circuiting (flow or density currents)?	Yes ☐ No ☒
Is baffling present in the basins?	Yes ☐ No ☒
If yes, describe the baffling: _____	
If multiple sedimentation basins, describe the piping from the basins to the filters: NA	
Is there evidence of floc carryover to the filters?	Yes ☐ No ☒

PWS ID Number: KY0940430 **Agency Interest Number:** 34054

COMMENTS: Uses Claricone for both floculation and sedimentation.

FILTERS
Total Number of Filters: 2
Plant flow rate divided by total square footage of filters in service at the time of inspection.

TYPE	MEDIA TYPE	FILTER RATE (at insp.)	FILTER CONTROL	SURFACE WASH TYPE	FILTER TO WASTE	FILTER AREA	PHYSICAL CONDITION
Conventional	Dual Media	No flow meter	None	Rotary	Yes ☒ No ☐	196 sq ft	Fair
					Yes ☐ No ☐		

List any chemicals fed in the filtration process: Chlorine fed at discharge of Claricone immediately before the filters. The only controls are for the opening and closing of the filter influent valves and the filter effluent valves.

What is the filtered water turbidity goal? <0.1 NTU		
Does this apply to the combined filter effluent?	Yes ☒	No ☐
To individual filter effluents?	Yes ☒	No ☐
What criteria are used for filter backwash? Visual rise in filter water level.		
What is the backwash rate in gallons per minute? 2000 to 6000		
Is filter backwash rate ramped up and down?	Yes ☒	No ☐
Is backwash flow rate measured?	Yes ☒	No ☐
Are filters ever bumped?	Yes ☐	No ☒
Is air scouring used?	Yes ☐	No ☒
What was the CFE turbidity at time of inspection? 0.057		
Are individual filters monitored for turbidity?	Yes ☒	No ☐
Is this turbidity continuously recorded?	Yes ☒	No ☐
Can this data be retrieved in usable form from storage (tape or CDs)?	Yes ☒	No ☐
Is filter to waste (rewash) present?	Yes ☒	No ☐
Is it used?	Yes ☒	No ☐
Can turbidity be measured while filtering to waste?	Yes ☒	No ☐
Are flows adjusted on remaining in-service filters during a backwash?	Yes ☐	No ☒

COMMENTS: Filter flow rate can not be measured.

MEMBRANE FILTRATION Not Applicable

What type of membrane filtration is used? _		
The membrane filtration process is PRESSURE ☐ or VACUUM ☐ driven.		
What is the designed membrane flux (flow per unit of membrane area)? _____		
Are pre-filters used ahead of the membranes?	Yes ☐	No ☐
Describe the direct integrity testing procedure. _____		
Describe how membrane breaks are isolated and repaired. _____		
How are the membranes "backwashed"? _____		
What type of chemical cleaning is used? _____		

How is this waste handled? _____
Have there been any operational or maintenance issues with the membranes? Yes ☐ No ☐
If yes, explain: _____
COMMENTS:

RESIDUALS HANDLING		
What percent of plant production is used for in-plant processes (backwash, chemical feed, sanitary)? 14 %		
How are spent backwash water and other liquid residuals handled? Sent to settling basins		
If applicable, is the spent backwash holding tank/lagoon volume adequate?	Yes ☒	No ☐
Does the plant discharge water from this tank/lagoon back to a body of water?	Yes ☒	No ☐
Does the plant have a KPDES discharge permit? If so, what is the permit number? KYG640069	Yes ☒	No ☐
Is the discharge meeting permit requirements?	Yes ☒	No ☐
Is the discharge point upstream of the intake?	Yes ☐	No ☒
If yes, how far upstream is the discharge point from the intake? _____		
Is spent backwash water recycled?	Yes ☐	No ☒
Is the spent backwash water recycled: as a "slug" ☐ or as a constant flow ☐?		
What percent of the flow is recycled? _____ %		
Are chemical feed rates adjusted during recycling?	Yes ☐	No ☐
Are raw water flows adjusted during recycling?	Yes ☐	No ☐
Are all recordkeeping requirements of the *Filter Backwash Rule* being followed?	Yes ☐	No ☐
How are solid residuals handled? Taken to WWTP		
COMMENTS:		

CHEMICAL FEED EQUIPMENT

CHEMICAL NAME	PURPOSE	FEEDER TYPE	FEED POINT	NUMBER & CONDITION
KMnO4	Taste Odor	Volumetric	Intake	1 Good
Ferric Chloride	Coagulation	Volumetric	Quick/Flash Mix	1 Good
Caustic Soda	pH Adjustment	Volumetric	Clearwell	1 Good
Powdered Activated Carbon	Taste Odor	Volumetric	Quick/Flash Mix	1 Good
Lime	Alkalinity	Volumetric	Quick/Flash Mix	1 Good
Polymer	Filter Aid	Volumetric	Pre-Flocculation	1 Good
Hydrofluosilicic Acid	Dental Health	Volumetric	Clearwell	1 Good
Copper Sulfate	Algae Control	Manual	Source	1 Good
Sulfuric Acid	pH Adjustment	Volumetric	Quick/Flash Mix	1 Good
Sodium Permanganate	Taste Odor	Volumetric	Intake	1 Good

How are chemical feeders calibrated? Graduated cylinder		
How often are chemical feeders calibrated? Daily		
Are chemical dosages calculated?	Yes ☒	No ☐

How often are dosages calculated? Daily		
Are chemicals NSF or United Laboratories certified (as approved by DOW)?	Yes ☒	No ☐
Do the bulk liquid feed systems have day tanks?	Yes ☐	No ☒
Are there at least two feeders provided for essential processes (such as coagulation and disinfection)?	Yes ☐	No ☒
Are spare parts available?	Yes ☒	No ☐
Is there enough storage for at least a 30-day supply of chemicals used?	Yes ☒	No ☐
Are there containment areas around the chemicals in case of spills or leaks?	Yes ☐	No ☒
Are in-plant water supplies protected from back-flow? (Cross connections)	Yes ☒	No ☐
Does a certified tester test backflow prevention devices?	Yes ☒	No ☐
What is the testing frequency? Irregular Last Tested: _____		
COMMENTS: Potassium Permanganate is fed at intake from Thomas Lake and Sodium Permanganate at intake from Severn Creek. Ferric Chloride does not have a day tank. The chemical is pumped directly from the bulk tanks. Drums of Sulfuric acid, including the online drum, are kept outside of the building in parking lot. Five gallon containers of Sodium Permanganate are also stored outside on parking lot. Neither chemical is covered or has secondary containment.		

GAS CHLORINE SAFETY: Inspected		
Is the chlorine room enclosed and separate from other operating areas?	Yes ☒	No ☐
Is there a working exhaust fan in the chlorine room?	Yes ☒	No ☐
Does it provide one complete air change per minute?	Yes ☐	No ☐
Does it exhaust from floor level?	Yes ☒	No ☐
Is intake air near the ceiling?	Yes ☒	No ☐
Is there an external audible and visual alarm?	Yes ☒	No ☐
Are switches located outside the chlorine room?	Yes ☒	No ☐
Are chlorine tanks secured?	Yes ☒	No ☐
Are the scales operational?	Yes ☒	No ☐
Is automatic switchover of chlorine cylinders provided?	Yes ☒	No ☐
Is there a shatterproof viewing window in chlorine room?	Yes ☒	No ☐
Is there a crash bar on the door of the chlorine room?	Yes ☒	No ☐
Does the door of the chlorine room open out and to the exterior of the building?	Yes ☒	No ☐
Is there a SCBA unit meeting NIOSH standards out side the chlorine room?	Yes ☒	No ☐
Are personnel trained to use the SCBA?	Yes ☒	No ☐
Is the "buddy system" practiced when changing or moving chlorine cylinders?	Yes ☒	No ☐
Is there a chlorine tank repair kit?	Yes ☒	No ☐
Are personnel trained and certified to use the kits?	Yes ☒	No ☐
Is ammonia available for chlorine leak detection?	Yes ☒	No ☐
Is a lock-out/tag-out system used for electrical repairs?	Yes ☒	No ☐
COMMENTS:		

CHLORINE DIOXIDE SAFETY: Not Applicable

Many materials will catch fire and burn violently when in contact with chlorite.

Is sodium chlorite stored in a separate room?	Yes ☐	No ☐
Is sodium chlorite stored away from organic material?	Yes ☐	No ☐
COMMENTS:		

GAS (ANHYDROUS) AMMONIA SAFETY: Not Applicable		
Is the ammonia room enclosed and separate from other operating areas?	Yes ☐	No ☐
Is there a working exhaust fan in the ammonia room?	Yes ☐	No ☐
If there is a working exhaust fan, does it provide one complete air change per minute?	Yes ☐	No ☐
Does the exhaust fan exhaust from ceiling level?	Yes ☐	No ☐
Is intake air near the floor?	Yes ☐	No ☐
Are switches located outside the ammonia room?	Yes ☐	No ☐
Are ammonia tanks secured?	Yes ☐	No ☐
Is there a shatterproof viewing window in ammonia room?	Yes ☐	No ☐
Is there a crash bar on the door of the ammonia room?	Yes ☐	No ☐
Does the ammonia room door open out and to the exterior of the building?	Yes ☐	No ☐
Is there a SCBA unit meeting NIOSH standards out side the ammonia room?	Yes ☐	No ☐
Are personnel trained to use the SCBA?	Yes ☐	No ☐
Is leak detection provided?	Yes ☐	No ☐
If leak detection is provided, is there an external audible and visual alarm?	Yes ☐	No ☐
How are ammonia leaks detected? ___		
Is a lock-out/tag-out system used for electrical repairs?	Yes ☐	No ☐
COMMENTS:		

DISINFECTION			
TYPE	APPLICATION POINT	REDUNDANCY AVAILABLE	FEEDER TYPE
Chlorine Gas	Pre-Filter	Yes ☒ No ☐	Chlorinator
Chlorine Gas	Clearwell	Yes ☒ No ☐	Chlorinator
		Yes ☐ No ☐	
What is the means used to measure disinfectant chemical usage? scales			
How is the disinfectant residual monitored? on line meter and lab test every two hours.			
Is there an on-line, recording chlorine analyzer on the plant tap (for systems serving >3,300)?		Yes ☒	No ☐
Are C-Ts calculated daily?		Yes ☒	No ☐
COMMENTS:			

CLEARWELLS			
VOLUME (gallons)	BAFFLING TYPE	DISINFECTANT RESIDUAL	
		TOTAL	FREE
Basement 50,000	0.1		

Above Ground 225,000	0.5		

List chemicals in the order in which they are fed into the clearwell: Chlorine, Caustic Soda, Hydrofluosilic Acid

If multiple clearwells, are they:
☒ in series (one following the other) OR ☐ parallel (side by side and not connected)

Are hatches secured? Yes ☒ No ☐

Are vents screened? Yes ☒ No ☐

How often are clear wells cleaned? has been over 5 years

COMMENTS: The chemicals entering at the clearwell are all pumped in through the clearwell hatch at the same time. The baffling information was copied from a CT Profile conducted on March 17, 2000.

WATER PLANT PUMPS
(Low service/raw water, high service/finished water and backwash)

FLOW STREAM	LOCATION	NUMBER OF PUMPS	CAPACITY (gpm)	PUMP TYPE	FLOW CONTROL METHOD
Primary Raw Water	Severn Creek	2	1000	Vertical Turbine	Telemetry
Secondary Raw Source	Lower Thomas lake	2	600	Centrifugal	Manual
Finished Water	Low Service	2	1000	Vertical Turbine	Automatic
Finished Water	High Service	2	1000	Vertical Turbine	Automatic

Are documented maintenance and pumping records maintained for all distribution pumping stations? (minimum of pump run times, pump testing, maintenance log) Yes ☒ No ☐

Do all pumping facilities have the ability to meet demand with one pump out of service during peak demand? Yes ☒ No ☐

COMMENTS:

WATER PLANT ON-LINE INSTRUMENTATION

TYPE	FLOW STREAM (Location)	MANUFACTURER	LAST CALIBRATION DATE
Flow	Raw Water	Allen Bradley	6/20/2010
Flow	EPTDS	Honeywell	6/20/2010
Level	Clearwell	Allen Bradley	6/20/2010
pH	Settled Water	Hach	6/20/2010
Turbidity	Settled Water	Hach	6/20/2010
Turbidity	Individual Filter Effluent	Hach	6/20/2010
Chlorine	Tap	Hach	6/20/2010
pH	Tap	Hach	6/20/2010

COMMENTS:

LABORATORY (PLANT)			
PARAMETERS TESTED	FREQUENCY	EQUIPMENT USED	CALIBRATION METHOD
Hardness	Daily	Titration	
Alkalinity	Daily	Titration	
Iron	Daily	Hach DR4000	Standards/ Buffers
Manganese	Daily	Hach DR4000	Standards/ Buffers
Flouride	Daily	Hach Ion 4 meter	Standards/ Buffers
Chlorine	Continuous	Hach CL17	Hach Company
Turbidity	Continuous	Hach 2100N	Hach Company
pH	Continuous	Hach Ion 4 meter	Hach Company

Is laboratory space and lighting adequate?	Yes ☒	No ☐
Are analyses conducted according to approved EPA methods?	Yes ☒	No ☐
Does the lab have SOPs for sample collection, analysis, and reporting?	Yes ☒	No ☐
Are daily log sheets used to record day-to-day operations, testing, etc?	Yes ☒	No ☐
If daily log sheet are used, are they: on the computer ☒ or hand-written ☒		
COMMENTS:		

IN-PLANT SAMPLING (for example, top and bottom of filters)				
SITE	CHLORINE		pH	TURBIDITY
	FREE	TOTAL		
Filter #1 Effluent				0.071
Filter #2 Effluent				0.085
Finished Water	1.78		7.42	0.067
Settled Water				0.632
Rapid Mix Effluent			6.69	
COMMENTS:				

III. DISTRIBUTION SYSTEM/FINISHED WATER STORAGE

DISTRIBUTION STORAGE FACILITIES: Inspected							
LOCATION	VOLUME (gal)	TANK TYPE	OVERFLOW		LAST CLEANED/	TELEMETRY	% TURNOVER
			SCREEN/	> 10' FROM			

PWS ID Number: KY0940430 **Agency Interest Number:** 34054

			FLAPPER	TANK	INSPECTED		(Per Day)
Perry Street	100,000	Elevated	Yes☒ No☐	Yes☐ No☒	3/2006	Yes☒ No☐	
Fair Grounds	400,000	Elevated	Yes☒ No☐	Yes☐ No☒	3/2006	Yes☒ No☐	
Bromely	177,000	Standpipe	Yes☒ No☐	Yes☒ No☐	3/2006	Yes☒ No☐	
Long Ridge	100,000	Standpipe	Yes☒ No☐	Yes☐ No☒	3/2006	Yes☒ No☐	Empty
Wheatley	186,000	Standpipe	Yes☒ No☐	Yes☐ No☒	3/2006	Yes☒ No☐	
Sparta	50,000	Elevated	Yes☒ No☐	Yes☐ No☒	3/2006	Yes☒ No☐	
Glencoe	100,000	Ground	Yes☐ No☐	Yes☐ No☐	Out of Service	Yes☐ No☐	Empty
Monterey	117,000	Standpipe	Yes☒ No☐	Yes☐ No☒	3/2006	Yes☒ No☐	
Hesler	237,000	Standpipe	Yes☐ No☒	Yes☐ No☒	3/2006	Yes☒ No☐	Empty
Elk Lake	100,000	Ground	Yes☐ No☐	Yes☐ No☒	3/2006	Yes☐ No☐	Empty
New Columbus	229,000	Standpipe	Yes☒ No☐	Yes☐ No☒		Yes☒ No☐	Empty
			Yes☐ No☐	Yes☐ No☐		Yes☐ No☐	

Are all storage tanks equipped with hatches, covers, screens, vandal guards and locks and all tank sites fenced for security?	Yes ☒	No ☐
Are all hatches, screens, and overflows on the storage tanks checked at least monthly?	Yes ☒	No ☐
Is there corrosion protection in the tanks?	Yes ☐	No ☒
Are all storage tanks professionally inspected at least every 5 years (including interior, coating systems, & piping)?	Yes ☒	No ☐

How often are tanks: Inspected? 5 years Cleaned? 5 years

COMMENTS: The Glencoe tank has been shut off and out of service for several years.

The Elk Lake tank was not put back into service after the last inspection.

The Sparta tank's overflow is at the top of the tank, is covered with hardware cloth having large openings and only extends approximately one foot away from the side of the tank.

The standpipes at Bromley, Wheatley, Monterey, and Hessler have had the lower halves of the overflow pipes removed and screening has been placed over the cut ends of the pipe. The screening requires frequent maintainance to remain in place. The screen was observed missing on the Hessler tank. Water overflowing these tanks falls directly next to the tanks onto piles of rock at the base of the tanks not at the required, as per Ten State Standards, 10 foot distance.

The New Columbus standpipe has a duckbill style flapper on the over flow pipe which ends approximately ten feet plus, from the ground on the side of the tank. The New Columbus standpipe was constructed in 2003 was reported to be empty.

The Long Ridge Standpipe's overflow pipe ends at the base of the tank.

The end of the overflow pipe at the Fairgrounds tower was approximately only four to five feet from base of the tower. This tower is very rusty and needs repainting.

The overflow pipe on the Perry St. (Downtown) tower ends in a duckbill style flapper half of the way up on one of the tower's legs. Telemetry has been installed on all of the tanks.

The water district management was advised that the storage tank overflows do not meet Ten State Standards.

DISTRIBUTION BOOSTER PUMPS AND/OR BOOSTER DISINFECTION FACILITIES: Inspected

LOCATION	Pump = P Disinfection = D	NUMBER & CAPACITY OF PUMPS (gpm)	DISINFECTION TYPE	AUXILIARY POWER
Long Ridge	P ☐ D ☒	@	Chlorine Gas	Yes ☐ No ☒

New Liberty	P ☒ D ☐	2 @ 225		Yes ☐ No ☒
Hessler	P ☐ D ☒	@	Chlorine Gas	Yes ☐ No ☒
New Columbus	P ☒ D ☐	2 @ 225		Yes ☐ No ☒
Hwy 22	P ☐ D ☒	@	Chlorine Gas	Yes ☐ No ☒
Rockdale	P ☐ D ☒	@	Chlorine Gas	Yes ☐ No ☒
Green's Farm	P ☒ D ☐	2 @ 225		Yes ☐ No ☒
	P ☐ D ☐	@		Yes ☐ No ☐
	P ☐ D ☐	@		Yes ☐ No ☐
	P ☐ D ☐	@		Yes ☐ No ☐

Does a certified distribution operator oversee distribution activities?	Yes ☒ No ☐
Does the system have standard specifications for design and construction of the distribution system?	Yes ☒ No ☐
Does the system prohibit new connections where pressure on the discharge side of the meter will be <30 psi?	Yes ☒ No ☐
Is the system able to meet minimum pressure requirements of DOW and/or other regulating authority?	Yes ☒ No ☐
Does the system have a documented leak detection program?	Yes ☒ No ☐
If there are separate distribution system areas, are they interconnected with each other?	Yes ☒ No ☐
If they are not interconnected, how many separate areas are there? 1	
What prevents these systems from being interconnected? Glencoe is supplied by the Gallatin County Water feed. Topography makes it cost prohibitive to interconnect.	
How many pressure zones are there? 4	
What is the range of distribution pressures? 30 to 120 psi	
Do any distribution areas require reduced pressure valves?	Yes ☒ No ☐
What piping materials are included in the distribution system? AC, PVC, cast iron, steel and Galvanzed	
Does the system have a program for flushing water mains?	Yes ☒ No ☒
Describe the process for sterilizing new mains/main breaks: As per Ten State Standards	
What types of on-line instrumentation are located at booster or pump stations and tanks? SCADA	
Does the system have a documented program for exercising distribution system valves?	Yes ☒ No ☐
Does the system have a documented program for regular testing of water meters including raw water, distributed and customer?	Yes ☒ No ☐
Is there a water meter replacement program?	Yes ☒ No ☐
Are there main break/emergency notification procedures?	Yes ☒ No ☐
Does the system have a documented procedure for issuing a boil water advisory and a consumer advisory? The procedure shall identify when (how soon after the occurrence) and how the system shall notify the affected health department, to whom that notification shall be made both during and after normal business hours, and procedures for issuing the advisory to the public. The public notification shall include instructions for the public (including how to properly boil water) and an explanation of steps being taken to correct the problem.	Yes ☒ No ☐
Describe how the decision is made to issue a Boil Water Advisory: As per KRS	
Does the system have a cross-connection control program?	Yes ☒ No ☐
If yes, is the cross-connection control program documented in writing?	Yes ☒ No ☐
If the cross-connection control program is not documented in writing, describe the process for finding and eliminating cross connections: _____	
Does a certified tester test the backflow prevention devices on a regular basis?	Yes ☒ No ☒

PWS ID Number: KY0940430 **Agency Interest Number:** 34054

Has a calibrated hydraulic model been developed for the system?	Yes ☒ No ☐
COMMENTS: The disinfection booster stations at Hessler and Rockdale are not in use and the chlorine tanks have been removed. The water system manager reported that none of the pressure booster stations are being used.	

DISTRIBUTION SAMPLING

SITE	CHLORINE		pH	TURBIDITY	OTHER
	FREE	TOTAL			
Sparta City Hall	0.80	0.59	7.08		Gallatin County
Owen Electric Office	0.52	0.73	7.00		
New Liberty FD	0.53	0.61	7.31		Carroll Co Feed
KAWC Owenton Office	1.56	1.83	7.45		
Monterey Market	1.55	1.84	6.98		
Beechwood Assemble of God Church	1.27	1.55	7.23		
Glencoe General Store	0.88	0.96	7.49		Gallatin Co Feed

Is the system maintaining the required chlorine (.2 mg/l) / chloramine (.5 mg/l) residuals in the distribution system?	Yes ☒ No ☐
COMMENTS:	

MAINTENANCE

Is plant housekeeping adequate?	Yes ☒ No ☐
Is distribution storage housekeeping adequate?	Yes ☒ No ☐
Are adequate supplies of spare parts kept on hand?	Yes ☒ No ☐
Are needed tools available?	Yes ☒ No ☐
What is the general condition of operating equipment? Good	
If not, is preventive maintenance performed?	Yes ☒ No ☐
COMMENTS:	

DOCUMENTATION (✓ all that apply)

☒ Samples taken by DEP	☐ Photographs obtained by DEP
☐ Samples taken by outside source	☐ Copies of records obtained by DEP
☐ Instrument readings taken by DEP regional office	☐ Other documentation

OVERALL TECHNICAL COMPLIANCE STATUS

☐ No Violations Observed
☒ No Violations Observed - Advisory Action Taken (Impending trends)
☐ Out of Compliance – Verbal notice given (Non-recurrent deficiency noted or violation corrected at time of inspection.)

PWS ID Number: KY0940430 **Agency Interest Number:** 34054

☐ Warning Notice Issued		
☐ Notice of Violation Issued		
INSPECTOR: Jeffrey R. Malsi	TITLE: Environmental Inspector III	DATE:

KENTUCKY
AMERICAN WATER

2300 Richmond Road
Lexington, KY 40502
www.amwater.com

P (859) 335-3660
F (859) 335-3388

September 29, 2010

Department for Environmental Protection
Division of Water, 4th Floor
Attn: Noah Taylor
200 Fair Oaks Lane
Frankfort, KY 40601

Dear Mr. Taylor:

Kentucky American Water received non significant comments and recommendations based upon the June 29, and August 9, 10, and 11, 2010, Sanitary Survey. Please find responses to the comments and recommendations.

Non Significant Comments

C. There are no day tanks associated with bulk liquid treatment chemical processes.
   A. Kentucky American Water is evaluating additional capital expenditures at this facility in light of the new water treatment plant that is being built on pool 3 of the Kentucky River. Kentucky American Water will continue working closely with the Kentucky Division of Water during this process.

C. There is no secondary containment for the treatment chemical processes.
   A. Kentucky American Water has installed secondary containment for the primary coagulant feed.

C. The overflow piping does not extend greater than 10 feet from the base of the following distribution storage tanks: Sparta, Wheatley, Monterey, Hessler, Fairgrounds, Perry Street, and Long Ridge.
   A. Kentucky American Water is not familiar with this requirement. According to Section 7.0.7. "Overflow" of 10 States Standards, the overflow should be brought to 12 to 24 inches above the ground surface.

KENTUCKY
AMERICAN WATER

2300 Richmond Road
Lexington, KY 40502
www.amwater.com

P (859) 335-3660
F (859) 335-3388

Internal engineering standards for American Water only specify at least an 8 foot distance from the overflow to the ground surface.

C. The screen was missing from Hessler tank overflow piping.
   A. The Hessler tank has been out of service for approximately 3 years. Kentucky American Water will install a bladder valve over the overflow in case this tank is placed into service in the future.

Recommendations

R. System should inspect and paint the Fairgrounds tank.
   A. Kentucky American Water (KAW) purchased Owenton Water in September 2005 and immediately began investing heavily in the infrastructure of the utility, including inspecting and painting Perry Street and Sparta tanks. Kentucky American Water (KAW) had the tank Fairgrounds tank inspected in 2006 by Tank Industry Consultants, Inc. (TIC), as a precursor to painting the tank. For the first time since ownership transition, KAW had to take the tank out of service briefly to allow the inspection. Pressure dropped significantly and unexpectedly in areas of the Northern Division. By 2008, a contract had been executed and the contractor was ready to begin work on the tank. To allow the work to occur, KAW planned to operate the supply plant at its maximum output in an effort to offset the pressure drop previously encountered. Pressure nevertheless again dropped significantly, and KAW determined that the work should not be continued. KAW is therefore fully aware of the need for service, has continued to evaluate alternative solutions, and will address the tank maintenance issue in some fashion. However, the planned painting work cannot be completed under current conditions.

R. System should make the Emergency Response Plan available to all staff.
   A. Kentucky American Water has made the Emergency Response Plan available to all staff.

KENTUCKY AMERICAN WATER
125
YEARS

KENTUCKY
AMERICAN WATER

2300 Richmond Road
Lexington, KY 40502
www.amwater.com

P (859) 335-3660
F (859) 335-3388

R. System should install flow meters on the filters.
   A. Kentucky American Water is evaluating whether to invest additional capital expenditures in this facility in light of the new water treatment plant that is being built on pool 3 of the Kentucky River. Kentucky American Water will continue working closely with the Kentucky Division of Water during this process.

If you have questions or need additional information, you may contact me at david.shehee@amwater.com or (859) 335-3660.

Sincerely,

David Shehee

David Shehee
Supervisor, Water Quality and Environmental Compliance

Enclosures

cc: KAW Compliance Files
Jeff Malsi, KDOW Florence Office
Rick Buchanan

KENTUCKY AMERICAN WATER 125 YEARS

STEVEN L. BESHEAR
GOVERNOR

ENERGY AND ENVIRONMENT CABINET
DEPARTMENT FOR ENVIRONMENTAL PROTECTION
DIVISION OF WATER
200 FAIR OAKS LANE
FRANKFORT, KENTUCKY 40601
www.kentucky.gov

LEONARD K. PETERS
SECRETARY

FACT SHEET

KENTUCKY POLLUTANT DISCHARGE ELIMINATION SYSTEM GENERAL PERMIT TO DISCHARGE TREATED WASTEWATER INTO WATERS OF THE COMMONWEALTH

KPDES No.: KYG640000 **Permit Writer:** Ronnie Thompson **Date:** December 22, 2009
AI No.: 35050

1. SYNOPSIS

a. Introduction

The Kentucky Division of Water is renewing the Kentucky Pollutant Discharge Elimination System (KPDES) general permit that authorizes the discharge of pollutants in filter backwash water and other wastewaters associated with drinking water production from municipal, private, state and federal Water Treatment Plants (WTPs). WTPs fall under the Standard Industrial Classification Code (SIC Code) 4941 - Water Supply Systems, except irrigation.

This general permit, referred to as KYG64, will replace all previous versions of KYG64 issued by the Division of Water. The conditions and requirements contained herein shall supersede the conditions and requirements contained in all previous versions of this permit.

This general permit contains numerous changes to the previous permit. The most significant changes from the September 2004 version of KYG64 include:

1. An exclusion of eligibility for discharges to a Cold Water Aquatic Habitat or within five miles and upstream of an existing drinking water intake.

2. An exclusion of eligibility for discharges to a water impaired for turbidity, or impaired for sedimentation/siltation with an approved Total Maximum Daily Load.

3. An exclusion of eligibility for WTPs that do not use conventional treatment.

4. The addition of effluent limitations for Total Residual Chlorine and conditional effluent limitations for Total Recoverable Iron and Total Phosphorus.

5. The addition of conditional effluent monitoring for Total Recoverable Aluminum.

DRAFT

6. Additional requirements to address antidegradation concerns for new facilities or expanded facilities discharging to a High Quality water.

7. The addition of a requirement for the permittee to develop and implement a Best Management Practices plan.

8. A requirement to identify discharge locations by placement of an informational marker.

9. The addition of definitions of some of the terms used in this general permit.

10. The addition of a provision to address significant process changes.

b. Description of Operation

WTPs treat surface or ground water to provide finished drinking water to consumers. Treatment of intake water may include screening, pre-sedimentation, flocculation, sedimentation, filtration, clarification and disinfection.

Wastewater is produced when water filters are periodically backwashed with finished drinking water to remove collected material. Backwashing is necessary in order to prevent the filters from clogging which would result in reduced filtering capacity and poor efficiency. Other wastewater generated by WTPs may include clarifier or sedimentation basin wastewater and wash water.

c. Production Capacity

WTP capacity varies from small private plants to large municipal plants producing millions of gallons of finished drinking water per day. Generally, the amount of wastewater produced is directly proportional to the production rate of the plant. Typically, WTPs do not operate at full production capacity.

d. Description of Treatment

Treatment of produced wastewater varies depending on the capacity of the WTP, the raw water source, geography and other site-specific conditions. The most common form of wastewater treatment is sedimentation. In this case, wastewater is directed to basins or holding ponds designed to allow sufficient detention time for suspended material to settle out before discharge. Sedimentation also allows time for chlorine, which is present in finished drinking water, to dissipate.

Any type of treatment produces sludge, which is typically dried and sent to a landfill or land applied. Some WTPs may also recycle a portion of their wastewater.

WTP discharges may occur on an intermittent basis or as is sometimes the case with treatment lagoon overflows, on a continual basis.

e. Selected Definitions

Cold Water Aquatic Habitat means a surface water and associated substrate that are able to support indigenous aquatic life or self-sustaining or reproducing trout populations on a year-round basis.

Conventional Treatment means raw water treatment consisting of coagulation, flocculation, sedimentation, gravity filtration and disinfection.

Daily Maximum is the highest of the discharge values measured on any one day during a calendar month. When only one sample is taken during a calendar month, the daily maximum is equivalent to the monthly average.

Exceptional Water is generally a unique water of the Commonwealth. The term may include waters that contain a fish community that is rated as "excellent" by the Index of Biotic Integrity; waters that contain a macroinvertebrate community that is rated as "excellent" by the Macroinvertebrate Bioassessment Index; or waters that are in the Cabinet's reference reach network. The term automatically includes those waters identified as an Outstanding State Resource Water.

Existing Facilities are facilities that are already discharging on the effective date of this permit.

Expanded Facilities are facilities that increase pollutant loading to the stream or increase their design capacity over levels approved prior to the effective date of this general permit.

Facility means an activity with a point source discharge that is subject to regulation under the KPDES program.

Grab Sample is a single portion of effluent taken in an instant when all constituents of an effluent have an equal chance of inclusion.

High Quality Water means a surface water not listed as an outstanding state resource water, an exceptional water or as an impaired water.

Impaired Water means a surface water that is not fully supporting its designated uses.

Instantaneous means a measurement taken at the time of sampling.

Monthly Average is the sum of all discharge values measured during a calendar month, divided by the number of discharges measured during that month. When only one sample is taken during a calendar month, the monthly average is equivalent to the daily maximum.

Nutrients mean phosphorus and nitrogen.

New Facilities are facilities that do not have an active KPDES individual or general permit on the effective date of this permit.

KPDES No.: KYG640000

Outstanding State Resource Water is generally a unique water of the Commonwealth. The term may include waters that are part of a relatively undisturbed watershed that can provide basic scientific data and possess outstanding water quality characteristics; waters that support a diverse or unique native aquatic flora or fauna; waters that provide exceptional aesthetic or ecological value; waters that are part of a unique geological or historical area; or waters that possess physical or chemical characteristics that provide an unusual aquatic habitat within a physiographic region. The term automatically includes waters identified under the Kentucky Wild Rivers Act, the Kentucky Nature Preserves Act, the Federal Wild and Scenic Rivers Act and waters that support endangered or threatened species.

Surface Water means waters having well-defined banks and beds, either constantly or intermittently flowing; lakes and impounded waters; marshes and wetlands; and any subterranean waters flowing in well-defined channels and having a demonstrable hydrologic connection with the surface. Lagoons used for waste treatment and effluent ditches that are situated on property owned, leased, or under valid easement by a permitted discharger are not considered to be surface waters of the Commonwealth.

Total Maximum Daily Load is a calculation of the maximum amount of a pollutant that a water body can receive and still meet water quality standards, and is an allocation of that amount to the source of the pollutant.

Turbidity is the presence of suspended particulates, including sand, silt, clay, finely divided organic or inorganic matter, plankton or other microscopic organisms, or elements that optically interfere with the clarity of liquid.

Warm Water Aquatic Habitat means a surface water and associated substrate capable of supporting indigenous warm water aquatic life.

Water Treatment Plant is that portion of the water supply system that is designed to alter either the physical, chemical or bacteriological quality of the water before entry into the water distribution system.

f. Area of Coverage

The Commonwealth of Kentucky.

g. Eligible Discharges

Pursuant to authority in KRS 224, this permit is applicable to all necessary discharges created as a result of drinking water production from water treatment plants that use conventional treatment. These discharges are referred to herein as "filter backwash water, clarifier or sedimentation basin wastewater and wash water."

h. Limitations on Coverage

This permit does not authorize discharges from:

1. Facilities discharging directly into a surface water designated as a Cold Water Aquatic Habitat (CAH) or as an Outstanding State Resource Water (OSRW) as listed in 401 KAR 10:026, Section 5.

2. Facilities discharging directly into a surface water categorized as an Outstanding National Resource Water (ONRW) or as an Exceptional Water (EW) as listed in 401 KAR 10:030, Section 1.

3. Facilities discharging within five miles and upstream of an existing drinking water intake.

4. Facilities discharging directly into a surface water listed in the most recent Integrated Report to Congress on Water Quality in Kentucky (303(d) and 305(b) report) as impaired for turbidity or impaired for silt/sediment and for which an approved Total Maximum Daily Load (TMDL) has been developed.

5. Facilities that the Division of Water determines have a discharge that is more appropriately addressed by an individual permit.

Surface water designations and categorizations are available at:
http://www.lrc.state.ky.us/kar/title401.htm

The 303(d) and the 305(b) Integrated Reports are available at:
http://www.water.ky.gov/sw/tmdl/303d.htm and
http://www.water.ky.gov/sw/swmonitor/305b.htm

Those TMDLs approved by EPA are available at:
http://www/water.ky.gov/sw/tmdl/approved+tmdls.htm

i. Permitting Action

Reissuance of a KPDES general permit for discharges from water treatment plants that use conventional treatment.

j. Receiving Waters

This permit authorizes discharges to waters that are:

1. Classified as Warmwater Aquatic Habitat, Primary/Secondary Contact Recreation and Domestic Water Supply as listed in 401 KAR 10:026, Section 5.

2. Categorized as Impaired, if the impairment is not for turbidity, or categorized as Impaired if the impairment is not for silt/sediment with an approved Total Maximum Daily Load.

3. Categorized as High Quality as listed in 401 KAR 10:030, Section 1, provided the discharge complies with the additional controls as specified in this general permit for new facilities or expanding facilities.

KPDES No.: KYG640000
AI No.: 35050
Fact Sheet Page 6

2. REPORTED DISCHARGE AND PROPOSED LIMITS

Description of Discharge – Filter backwash water, clarifier or sedimentation basin wastewater and wash water.

Effluent Characteristics	Reported Discharge Monthly Average	Reported Discharge Daily Maximum	Proposed Limits Monthly Average	Proposed Limits Daily Maximum	Applicable Water Quality Criteria and/or Effluent Guidelines
Flow (MGD)	Variable	Variable	Report	Report	401 KAR 5:065, Section 2(3)
Total Suspended Solids (mg/l)	Variable	Variable	30	50	401 KAR 5:080, Section 2(3)
Total Residual Chlorine (mg/l)	Variable	Variable	0.011	0.019	401 KAR 10:031, Section 4(k)
Total Recoverable Aluminum (mg/l)	Variable	Variable	Report	Report	401 KAR 5:065, Section 2(3)
Total Recoverable Iron (mg/l)	Variable	Variable	Report	Report	401 KAR 5:065, Section 2(3)
Total Phosphorus (mg/l) 1/	Variable	Variable	Report	Report	401 KAR 5:065, Section 2(3)
Total Phosphorus (mg/l) 2/	Variable	Variable	1.0	2.0	401 KAR 5:080, Section 2(3)
pH (standard units)	Variable	Variable	6.0	9.0	401 KAR 10:031, Section 4

The data in the Reported Discharge columns varies depending on the quality of the intake water, the frequency of backwashing, treatment options and other variables.

Monitoring for total Recoverable Aluminum is only required if aluminum-based coagulants are used.

Monitoring for Total Recoverable Iron is only required if iron-based coagulants are used.

1/ Monitoring for Total Phosphorus is only required if phosphates are used in the distribution system.

2/ Total Phosphorus limitations apply only to facilities discharging directly into a surface water impaired for nutrients.

KPDES No.: KYG640000

3. METHODOLOGY USED IN DETERMINING LIMITATIONS

a. Description of Discharge

Filter backwash water, clarifier or sedimentation basin wastewater and wash water.

b. Effluent Characteristics

The primary pollutant of concern in WTP discharges is typically suspended solids. WTP discharges also have the potential to contain chlorine, aluminum, iron and phosphorus. In addition to flow rate and pH, these pollutants are included in this general permit.

c. Pertinent Factors

General permits are appropriate when the wastewater characteristics of an industry as a whole are similar and can be addressed by a single set of permit conditions. Discharges from WTPs that use something other than conventional treatment, such as Reverse Osmosis, were not considered during limitation development and are therefore not eligible for coverage under this general permit.

Discharges that contain contaminated storm water or process wastewater not related to drinking water production were also not considered during limitation development. These types of wastewater may introduce pollutants not addressed by this general permit and are therefore not eligible for coverage under this general permit.

Discharges from WTPs are not a point source category addressed by Title 40 of the Code of Federal Regulations (40 CFR) for which the Environmental Protection Agency (EPA) has developed effluent guidelines and standards.

The previous version of this general permit states, "upon issuance of a new general permit, the permittee will have coverage automatically renewed. A new NOI or other notification is not necessary." However, because of significant changes to the new permit and the need for additional information, a new NOI will be required from all facilities, new or existing, in order to obtain coverage under this general permit.

d. Monitoring Requirements

Flow shall be monitored once per month instantaneously.

Total Suspended Solids, Total Residual Chlorine and pH shall be monitored once per month by grab sample.

If required, Total Recoverable Aluminum or Total Recoverable Iron shall be monitored once per month by grab sample.

If required, Total Phosphorous shall be monitored once per month by grab sample. Total Phosphorous shall be monitored once per week by grab sample for discharges directly into the Ohio River.

e. Justification of Limits

The Kentucky Administrative Regulations (KARs) cited below have been duly promulgated pursuant to the requirements of Chapter 224 of the Kentucky Revised Statutes (KRSs).

Flow, Total Recoverable Aluminum and Total Recoverable Iron
The monitoring requirements for these parameters are consistent with the requirements of 40 CFR 122.43 as incorporated by reference in 401 KAR 5:065, Section 2(3).

Total Suspended Solids
The limits for this parameter are consistent with the requirements of 40 CFR 125.3(c)(2) as incorporated by reference in 401 KAR 5:080, Section 2(3). The limits are representative of the Division of Water's "Best Professional Judgment" (BPJ) determination of the "Best Conventional Pollutant Control Technology" (BCT) requirements for these pollutants. The EPA Guidance Document, "Interim BPCTA For Municipal and Industrial Water Treatment Plants" was used in establishing these BPJ limitations.

Total Residual Chlorine and pH
The limits for these parameters are consistent with the requirements of 401 KAR 10:031, Section 4.

Total Phosphorus
There is the potential for this parameter to be present in WTP discharges. Because of the state of hypoxia that exists within portions of the Gulf of Mexico, the Environmental Protection Agency (EPA) is concerned with the discharge of this pollutant upstream from the mouth of the Mississippi River. The monitoring requirements for this parameter are consistent with the requirements of 40 CFR 122.43 as incorporated by reference 401 KAR 5:065, Section 2(3). The limits for this parameter are consistent with the requirements of 40 CFR 125.3(c)(2) as incorporated by reference in 401 KAR 5:080, Section 2(3). The limits are representative of the Division of Water's "Best Professional Judgment" (BPJ) determination of the "Best Conventional Pollutant Control Technology" (BCT) requirements for these pollutants.

4. PERMIT APPLICATION REQUIREMENTS

a. NOI Submittal Required

Upon issuance of this general permit, a new Notice of Intent (NOI) will be required for all existing facilities with either permitted or unpermitted discharges. After issuance of this general permit, a new NOI is required for any new facilities proposing to discharge.

The owner or operator of a facility that requires coverage under this general permit shall submit Form NOI-WTP and a United States Geological Survey (USGS) 7.5-minute quadrangle topographic map, or copy, with the facility and discharge location(s) clearly marked. Form NOI-WTP requires the following (see form for details):

Permittee Information
General Facility Information
Discharge Description
Discharge Monitoring Report (DMR) Information
Certification

b. NOI Submittal Deadlines

An application for an existing discharge presently covered under the expired general permit must be received by the Division of Water within thirty (30) days of the effective date of this permit.

An application for a new discharge must be received by the Division of Water at least one hundred and eighty (180) days before the proposed discharge is due to commence.

c. Where to Submit an NOI

Completed NOI forms should be sent to the address below:

Kentucky Division of Water
Surface Water Permits Branch
200 Fair Oaks Lane
Frankfort, Kentucky 40601

If, based upon the review of the NOI the Division of Water determines that additional controls or requirements beyond those contained in this general permit are necessary to protect water quality, then the applicant shall be required to obtain an individual permit.

5. AUTHORIZATION TO DISCHARGE

The permittee is authorized to discharge under the terms and conditions of this general permit upon written notification of coverage by the Division of Water. Until then, facilities with coverage under the expired general permit may continue to operate under the terms and conditions of that permit.

6. ANTIDEGRADATION

In the decision rendered by the United States Court of Appeals for the Sixth Circuit in Kentucky Waterways Alliance, et al. v. Johnson, et al., the court remanded to EPA its approval of certain sections of Kentucky's Antidegradation Policy Implementation Methodology as codified in 401 KAR 10:030.

The Energy and Environment Cabinet (EEC) has recently revised 401 KAR 10:030 to establish new procedures for the implementation of antidegradation requirements in general permits. In lieu of performing an alternatives analysis and socioeconomic demonstration, the new procedure enables the Division of Water, acting on the behalf of EEC, to establish additional analyses, control measures, or other conditions to satisfy antidegradation requirements.

The new procedures require the Division of Water to describe in the Fact Sheet how the general permit complies with the antidegradation requirements and to notify the public of facilities granted coverage under the general permit via the Division of Water web page. The public notification shall include the facility name, location and receiving water.

In regards to antidegradation and the lowering of water quality, WTPs are not a net contributor of pollutants to water resources. Because they remove pollutants from source water and increase the quality to drinking water standards, WTP discharges do not contain a greater volume of pollutants than were originally present in the source water.

Accordingly, discharges from the facilities potentially covered by this permit are inherently different from a discharge of process water from a typical industrial facility. However, when these pollutants are collected over time from large volumes of water and are then discharged through small volumes of finished water, the concentration of a pollutant can increase.

Therefore, for new facilities or expanding facilities discharging to High Quality Waters (waters otherwise requiring an antidegradation review), the Division of Water has determined to include within this general permit, additional protective measures such that compliance with these measures results in no significant degradation in the receiving water due to the permitted activity.

These additional protective measures include:

a. Additional Analysis

The permittee shall assure that the discharge does not cause a permanent increase in the long-term average of the total suspended solids concentration of the receiving stream. This requirement applies whether the WTP withdraws water from the same stream receiving the discharge, or whether the WTP withdraws water from another source. The facility may use existing data or perform monitoring and analysis to demonstrate compliance with this requirement.

b. Control Measures

The permittee shall take measures to prevent WTP discharges from containing any residual chlorine by dechlorinating all wastewater prior to discharge. This permit does not stipulate the method of dechlorination. However, if chemical means of dechlorination are used, it is important to observe proper dosing. Significant overdosing must be avoided because excess sulfite can react with oxygen to form sulfates, reducing dissolved oxygen levels in the receiving stream.

The permittee shall take measures to prevent WTP discharges from mobilizing and carrying sediment into surface waters through soil erosion. This requirement applies to areas beyond the monitoring location. The type of erosion control measures used should be based on site-specific conditions and may include the use of energy dissipation devices or rock lined discharge channels.

c. Other Conditions

The permittee shall, to the extent possible, minimize the frequency, volume and duration of discharge. This requirement may address water conservation, intake water quality or excluding storm water from entering into the wastewater treatment system.

The permittee shall perform visual inspections of all wastewater treatment components on a daily basis. This requirement is to prevent untreated or insufficiently treated effluent from reaching a surface water. Typical inspections should include an examination of all pipes, valves, pumps, basins, ponds, tanks, equipment, supports and foundations.

In addition, coverage under this permit is not available for discharges to waters impaired for turbidity, or impaired for sedimentation/siltation with an approved Total Maximum Daily Load.

These requirements clarify the Division of Water's expectation of facilities to meet all applicable antidegradation requirements. The goal of these requirements is to prevent any lowering of water quality of waters of the Commonwealth categorized as High Quality.

If, based upon the review of the NOI the Division of Water determines that additional controls or requirements beyond those contained in this general permit are necessary to meet antidegradation requirements, then the applicant shall be required to obtain an individual permit.

The conditions of 401 KAR 10:029, Section 1 has been satisfied by this permit action. Existing facilities that received coverage under previous versions of this permit and are not expanding are not subject to antidegradation implementation procedures. For new facilities or expanding facilities, this reissued general permit is consistent with the requirements of 401 KAR 10:030, Section 1.

7. PROPOSED COMPLIANCE SCHEDULE FOR ATTAINING EFFLUENT LIMITATIONS

The permittee shall comply with the effluent limitations by the effective date of the permit.

8. PROPOSED SPECIAL CONDITIONS WHICH WILL HAVE A SIGNIFICANT IMPACT ON THE DISCHARGE

Pursuant to 401 KAR 5:065, Section 2(10), a BMP requirement shall be included: to control or abate the discharge of pollutants from ancillary areas containing toxic or hazardous substances or those substances which could result in an environmental emergency; where numeric effluent limitations are infeasible; or to carry out the purposes and intent of KRS 224.

9. PROCESS CHANGES

Discharges authorized by this permit shall remain consistent with those described on the approved NOI. Any significant changes to the facility or modifications to the treatment process that change the chemical or physical properties of the wastewater discharge must be reported to the Division of Water by way of submitting an updated NOI-WTP form. After reviewing the updated NOI, the Division of Water may require the permittee to submit an application for an individual permit.

10. PERMIT TRANSFERS

When the owner or operator of a facility covered under this permit changes, the new owner or operator must submit a Change of Ownership form at least 48 hours before the change to transfer coverage under this general permit. Coverage cannot be transferred from a facility at one physical location to a facility at another physical location.

11. PERMIT TERMINATIONS

In the event of an elimination of all wastewater discharges authorized by this permit, the owner or operator must submit a Notice of Termination (Form NOT-WTP) in order to terminate coverage under this permit and nullify its requirements.

12. PERMIT DURATION

Five (5) years. This general permit expires on the date indicated on the signature page. However, coverage under an expired general permit continues in effect until the Division of Water issues a new general permit.

13. PERMIT INFORMATION

The application, draft permit and fact sheet, public notice, comments received and additional information are available by writing the Division of Water at 200 Fair Oaks Lane, Frankfort, Kentucky 40601.

14. REFERENCES AND CITED DOCUMENTS

All material and documents referenced or cited in this fact sheet are parts of the permit information as described above and are readily available at the Division of Water Central Office. Information regarding these materials may be obtained from the person listed below.

15. CONTACT INFORMATION

For further information, contact the individual identified on the Public Notice or the Permit Writer – Ronnie Thompson at (502) 564-8158, extension 4896 or e-mail Ronnie.Thompson@ky.gov.

16. PUBLIC NOTICE INFORMATION

Please refer to the attached Public Notice for details regarding the procedures for a final permit decision, deadline for comments, and other information required by 401 KAR 5:075, Section 4(2)(e).

KPDES

KENTUCKY POLLUTANT DISCHARGE ELIMINATION SYSTEM

PERMIT

PERMIT NO.: KYG640000
AI NO.: 35050

AUTHORIZATION TO DISCHARGE UNDER THE KENTUCKY POLLUTANT DISCHARGE ELIMINATION SYSTEM

Pursuant to Authority in KRS 224,

Any municipal, private, state or federally owned Water Treatment Plant using conventional treatment

is authorized to discharge from a facility located

Within one of the 120 counties of the Commonwealth of Kentucky

to receiving waters named

Any of the eligible Waters of the Commonwealth that comprise the Mississippi and Ohio River basins and sub-basins, within the political and geographical boundaries of Kentucky.

in accordance with effluent limitations, monitoring requirements, and other conditions set forth in PARTS I, II, III, IV and V hereof. The permit consists of this cover sheet, PART I 2 pages, PART II 2 pages, PART III 2 pages, PART IV 2 pages and PART V 3 pages.

This permit shall become effective on

This permit and the authorization to discharge shall expire at midnight,

Date Signed

Sandra L. Gruzesky, Director
Division of Water

PART I – GENERAL INFORMATION

A. Selected Definitions

Cold Water Aquatic Habitat means a surface water and associated substrate that are able to support indigenous aquatic life or self-sustaining or reproducing trout populations on a year-round basis.

Conventional Treatment means raw water treatment consisting of coagulation, flocculation, sedimentation, gravity filtration and disinfection.

Daily Maximum is the highest of the discharge values measured on any one day during a calendar month. When only one sample is taken during a calendar month, the daily maximum is equivalent to the monthly average.

Exceptional Water is generally a unique water of the Commonwealth. The term may include waters that contain a fish community that is rated as "excellent" by the Index of Biotic Integrity; waters that contain a macroinvertebrate community that is rated as "excellent" by the Macroinvertebrate Bioassessment Index; or waters that are in the Cabinet's reference reach network. The term automatically includes those waters identified as an Outstanding State Resource Water.

Existing Facilities are facilities that are already discharging on the effective date of this permit.

Expanded Facilities are facilities that increase pollutant loading to the stream or increase their design capacity over levels approved prior to the effective date of this general permit.

Facility means an activity with a point source discharge that is subject to regulation under the KPDES program.

Grab Sample is a single portion of effluent taken in an instant when all constituents of an effluent have an equal chance of inclusion.

High Quality Water means a surface water not listed as an outstanding state resource water, an exceptional water or as an impaired water.

Impaired Water means a surface water that is not fully supporting its designated uses.

Instantaneous means a measurement taken at the time of sampling.

Monthly Average is the sum of all discharge values measured during a calendar month, divided by the number of discharges measured during that month. When only one sample is taken during a calendar month, the monthly average is equivalent to the daily maximum.

Nutrients mean phosphorus and nitrogen.

New Facilities are facilities that do not have an active KPDES individual or general permit on the effective date of this permit.

Outstanding State Resource Water is generally a unique water of the Commonwealth. The term may include waters that are part of a relatively undisturbed watershed that can provide basic scientific data and possess outstanding water quality characteristics; waters that support a diverse or unique native aquatic flora or fauna; waters that provide exceptional aesthetic or ecological value; waters that are part of a unique geological or historical area; or waters that possess physical or chemical characteristics that provide an unusual aquatic habitat within a physiographic region. The term automatically includes waters identified under the Kentucky Wild Rivers Act, the Kentucky Nature Preserves Act, the Federal Wild and Scenic Rivers Act and waters that support endangered or threatened species.

Surface Water means waters having well-defined banks and beds, either constantly or intermittently flowing; lakes and impounded waters; marshes and wetlands; and any subterranean waters flowing in well-defined channels and having a demonstrable hydrologic connection with the surface. Lagoons used for waste treatment and effluent ditches that are situated on property owned, leased, or under valid easement by a permitted discharger are not considered to be surface waters of the Commonwealth.

Total Maximum Daily Load is a calculation of the maximum amount of a pollutant that a water body can receive and still meet water quality standards, and is an allocation of that amount to the source of the pollutant.

Turbidity is the presence of suspended particulates, including sand, silt, clay, finely divided organic or inorganic matter, plankton or other microscopic organisms, or elements that optically interfere with the clarity of liquid.

Warm Water Aquatic Habitat means a surface water and associated substrate capable of supporting indigenous warm water aquatic life.

Water Treatment Plant is that portion of the water supply system that is designed to alter either the physical, chemical or bacteriological quality of the water before entry into the water distribution system.

B. Eligible Discharges

Pursuant to authority in KRS 224, this permit is applicable to all necessary discharges created as a result of drinking water production from water treatment plants that use conventional treatment. These discharges are referred to herein as filter backwash water, clarifier or sedimentation basin wastewater and wash water.

C. Limitations on Coverage

This permit does not authorize discharges from:

1. Facilities discharging directly into a surface water designated as a Cold Water Aquatic Habitat (CAH) or as an Outstanding State Resource Water (OSRW) as listed in 401 KAR 10:026, Section 5.

2. Facilities discharging directly into a surface water categorized as an Outstanding National Resource Water (ONRW) or as an Exceptional Water (EW) as listed in 401 KAR 10:030, Section 1.

3. Facilities discharging within five miles and upstream of an existing drinking water intake.

4. Facilities discharging directly into a surface water listed in the most recent Integrated Report to Congress on Water Quality in Kentucky (303(d)and 305(b) report) as impaired for turbidity or impaired for silt/sediment and for which an approved Total Maximum Daily Load (TMDL) has been developed.

5. Facilities that the Division of Water determines have a discharge that is more appropriately addressed by an individual permit.

D. Permitting Action

Reissuance of a KPDES general permit for discharges from water treatment plants that use conventional treatment.

PART II
Page II-1
Permit No.: KYG640000
AI No.: 35050

PART II A - EFFLUENT LIMITATIONS AND MONITORING REQUIREMENTS

During the period beginning on the effective date of this permit and lasting through the term of this permit, the permittee is authorized to discharge filter backwash water, clarifier or sedimentation basin wastewater and wash water from any outfall identified on the NOI.

Such discharges shall be limited and monitored by the permittee as specified below:

EFFLUENT CHARACTERISTICS	DISCHARGE LIMITATIONS (lbs/day)		DISCHARGE LIMITATIONS Other Units(Specify)		MONITORING REQUIREMENTS	
	Monthly Avg.	Daily Max.	Monthly Avg.	Daily Max.	Measurement Frequency	Sample Type
Flow (MGD)	Report	Report	N/A	N/A	1/Month	Instantaneous
Total Suspended Solids	N/A	N/A	30 mg/l	50 mg/l	1/Month	Grab
Total Residual Chlorine	N/A	N/A	0.011 mg/l	0.019 mg/l	1/Month	Grab
TR Aluminum (mg/l) (see Note 1)	N/A	N/A	Report	Report	1/Month	Grab
TR Iron (mg/l) (see Note 2)	N/A	N/A	Report	Report	1/Month	Grab
Total Phosphorus (see Note 3)						
(see Note 4)	N/A	N/A	Report	Report	1/Month	Grab
(see Note 5, then 4)	N/A	N/A	1.0 mg/l	2.0 mg/l	1/Month	Grab
pH (standard units)	N/A	N/A	6.0 (min)	9.0 (max)	1/Month	Grab

The abbreviation N/A means Not Applicable. The abbreviation TR means Total Recoverable.

There shall be no discharge of floating solids or visible foam or sheen in other than trace amounts.

Samples shall be taken at the nearest accessible point prior to discharge or to mixing with the receiving waters or waste streams from other outfalls.

Samples and measurements shall be representative of the volume and nature of the monitored discharge. Grab samples shall be a single effluent portion collected at the period most representative of the total discharge.

Notes:

1 Monitoring for Total Recoverable Aluminum is only required if aluminum-based coagulants are used.
2 Monitoring for Total Recoverable Iron is only required if iron-based coagulants are used.
3 Monitoring for Total Phosphorus is only required if phosphates are used in the distribution system.
4 Increase measurement frequency to 1/Week for facilities discharging directly into the Ohio River.
5 Limitations apply only to facilities discharging directly into a surface water impaired for nutrients.

PART II B – ADDITIONAL ANALYSIS, CONTROL MEASURES AND OTHER CONDITIONS

The following requirements apply only to new facilities or expanding facilities discharging directly into a surface water categorized as a High Quality Water.

A. Additional Analysis

The permittee shall assure that the discharge does not cause a permanent increase in the long-term average of the total suspended solids concentration of the receiving stream. This requirement applies whether the WTP withdraws water from the same stream receiving the discharge, or whether the WTP withdraws water from another source. The facility may use existing data or perform monitoring and analysis to demonstrate compliance with this requirement. This requirement is in addition to the Total Suspended Solids monitoring that must be performed by all facilities.

B. Control Measures

The permittee shall take measures to prevent WTP discharges from containing any residual chlorine by dechlorinating all wastewater prior to discharge. This permit does not stipulate the method of dechlorination. However, if chemical means of dechlorination are used, it is important to observe proper dosing. Significant overdosing must be avoided because excess sulfite can react with oxygen to form sulfates, reducing dissolved oxygen levels in the receiving stream. This requirement is in addition to the Total Residual Chlorine monitoring that must be performed by all facilities.

The permittee shall take measures to prevent WTP discharges from mobilizing and carrying sediment into surface waters through soil erosion. This requirement applies to areas beyond the monitoring location. The type of erosion control measures used should be based on site-specific conditions and may include the use of energy dissipation devices or rock lined discharge channels.

C. Other Conditions

The permittee shall, to the extent possible, minimize the frequency, volume and duration of discharge. This requirement may address water conservation, intake water quality or excluding storm water from entering into the wastewater treatment system.

The permittee shall perform visual inspections of all wastewater treatment components on a daily basis. This requirement is to prevent untreated or insufficiently treated effluent from reaching a surface water. Typical inspections should include an examination of all pipes, valves, pumps, basins, ponds, tanks, equipment, supports and foundations.

The implementation of these requirements shall be documented by the permittee in the facility's Best Management Practices plan and are in addition to standard Best Management Pratices that apply to all facilities.

(See PART V, SECTION B. SPECIFIC CONDITIONS, 2. New or Expanding Discharges to a High Quality Water)

PART III – PERMIT APPLICATION REQUIREMENTS

The owner or operator of a facility that requires coverage under this general permit shall submit Form NOI-WTP and a United States Geological Survey (USGS) 7.5-minute quadrangle topographic map, or copy, with the facility and discharge location(s) clearly marked.

A. NOI Content

Form NOI-WTP requires the following information:

SECTION I – PERMITTEE INFORMATION

- Applicant Name
- Mailing address
- City, State, Zip Code
- Contact Name
- Contact Phone Number

SECTION II – GENERAL FACILITY INFORMATION

- WTP Name
- Physical Address
- City, State, Zip Code
- County
- WTP Latitude
- WTP Longitude
- Design Capacity
- Average Production
- WTP Raw Water Intake Source
- Permitted Withdrawal Volume
- WTP Type
- Raw Water Additives
- Finished Water Additives

SECTION III – DISCHARGE DESCRIPTION

- Wastewater Type
- Wastewater Flow Rate
- Number of Outfalls
- Outfall Latitude
- Outfall Longitude
- Wastewater Treatment
- Receiving Water Body
- Nearest downstream public water supply
- Distance to nearest downstream public water supply
- Stream Segment Use Designation
- Stream Segment Antidegradation Categorization

SECTION IV – DISCHARGE MONITORING REPORT (DMR) INFORMATION

- Mailing Name
- Mailing Address
- City, State, Zip Code
- DMR Contact Name
- Contact Phone Number

SECTION V - CERTIFICATION

The NOI contains a statement certifying the information provided is correct and accurate. Following the certification statement is a signature block for the authorized agent, including the agent's name, official title, telephone number and date.

ATTACHMENT

The NOI contains a requirement to attach a USGS 7.5-minute quadrangle map or copy with the site and the discharge location(s) clearly marked.

B. NOI Submittal Deadlines

An application for an existing discharge presently covered under the expired general permit must be received by the Division of Water within thirty (30) days of the effective date of this permit.

An application for a new discharge must be received by the Division of Water at least one hundred and eighty (180) days before the proposed discharge is due to commence.

C. Where to Submit an NOI

Completed NOI forms should be sent to the address below:

Kentucky Division of Water
Surface Water Permits Branch
200 Fair Oaks Lane
Frankfort, Kentucky 40601

If, based upon the review of the NOI the Division of Water determines that additional controls or requirements beyond those contained in this general permit are necessary to protect water quality, then the applicant shall be required to obtain an individual permit.

PART IV - OTHER REQUIREMENTS

A. Reporting of Monitoring Results

Monitoring results obtained during each monitoring period must be reported on a preprinted Discharge Monitoring Report (DMR) Form that will be mailed to you. The completed DMR for each monitoring period must be sent to the Division of Water at the address listed below (with a copy to the appropriate Regional Office) postmarked no later than the 28th day of the month following the monitoring period for which monitoring results were obtained.

Energy and Environment Cabinet
Department for Environmental Protection
Division of Water/Surface Water Permits Branch
200 Fair Oaks Lane
Frankfort, Kentucky 40601

A list of Division of Water Regional Offices and the counties that they serve is included as Attachment A.

If the permittee monitors any pollutant more frequently than required by this permit, then the permittee must include the results of that monitoring in the calculation and reporting of any data submitted to the Division of Water on the DMRs.

B. Reopener Clause

This permit shall be modified, or alternatively revoked and reissued, to comply with any applicable effluent standard or limitation issued or approved under 401 KAR 5:050 through 5:086, if the effluent standard or limitation so issued or approved:

1. Contains different conditions or is otherwise more stringent than any effluent limitation in the permit; or

2. Controls any pollutant not limited in the permit.

The permit as modified or reissued under this paragraph shall also contain any other requirements of KRS Chapter 224 when applicable.

C. Schedule of Compliance

The permittee shall achieve compliance with all the requirements of this general permit upon written notification of coverage by the Division of Water.

E. Standard Conditions

This permit has been issued under the provisions of KRS Chapter 224 and regulations promulgated pursuant thereto. Issuance of this permit does not relieve the permittee from the responsibility of obtaining any other permits or licenses required by this Cabinet and other state, federal, and local agencies.

It is the responsibility of the permittee to demonstrate compliance with permit parameter limitations by utilization of sufficiently sensitive analytical methods.

The permittee is also advised that all KPDES permit conditions in KPDES Regulation 401 KAR 5:065, Section 1 will apply to all discharges authorized by this permit.

F. Process Changes

Discharges authorized by this permit shall remain consistent with the approved NOI. Any significant changes to the facility or modifications to the treatment process that change the chemical or physical properties of the wastewater discharge must be reported to the Division of Water by way of submitting an updated NOI-WTP form. After reviewing the updated NOI, the Division of Water may require the permittee to submit an application for an individual permit.

G. Permit Transfers

When the owner or operator of a facility covered under this permit changes, the new owner or operator must submit a Change of Ownership form at least 48 hours before the change to transfer coverage under this general permit. Coverage cannot be transferred from a facility at one physical location to a facility at another physical location.

H. Permit Terminations

In the event of an elimination of all wastewater discharges authorized by this permit, the owner or operator must submit a Notice of Termination (Form NOT-WTP) in order to terminate coverage under this permit and nullify its requirements.

PART V
Page V-1
Permit No.: KYG640000
AI No.: 35050

PART V - BEST MANAGEMENT PRACTICES

SECTION A. GENERAL CONDITIONS

1. Applicability

These conditions apply to all permittees who use, manufacture, store, handle, or discharge any pollutant listed as: (1) toxic under Section 307(a)(1) of the Clean Water Act; (2) oil, as defined in Section 311(a)(1) of the Act; (3) any pollutant listed as hazardous under Section 311 of the Act; or (4) is defined as a pollutant pursuant to KRS 224.01-010(35) and who have ancillary manufacturing operations which could result in (1) the release of a hazardous substance, pollutant, or contaminant, or (2) an environmental emergency, as defined in KRS 224.01-400, as amended, or any regulation promulgated pursuant thereto (hereinafter, the "BMP pollutants"). These operations include material storage areas; plant site runoff; in-plant transfer, process and material handling areas; loading and unloading operations, and sludge and waste disposal areas.

2. BMP Plan

The permittee shall develop and implement a Best Management Practices (BMP) plan consistent with 401 KAR 5:065, Section 2(10) pursuant to KRS 224.70-110, which prevents or minimizes the potential for the release of "BMP pollutants" from ancillary activities through plant site runoff; spillage or leaks, sludge or waste disposal; or drainage from raw material storage. A Best Management Practices (BMP) plan will be prepared by the permittee unless the permittee can demonstrate through the submission of a BMP outline that the elements and intent of the BMP have been fulfilled through the use of existing plans such as the Spill Prevention Control and Countermeasure (SPCC) plans, contingency plans, and other applicable documents.

3. Implementation

The plan shall be developed and submitted to the Division of Water within 90 days of the written notification of coverage under this general permit. Implementation shall be within 180 days of that submission. Modifications to the plan as a result of ineffectiveness or operational changes to the facility shall be submitted to the Division of Water and implemented as soon as possible.

4. General Requirements

The BMP plan shall:

a. Be documented in narrative form, and shall include any necessary plot plans, drawings, or maps.

b. Establish specific objectives for the control of toxic and hazardous pollutants.

   (1) Each facility component or system shall be examined for its potential for causing a release of "BMP pollutants" due to equipment failure, improper operation, natural phenomena such as rain or snowfall, etc.

   (2) Where experience indicates a reasonable potential for equipment failure (e.g., a tank overflow or leakage), natural condition (e.g., precipitation), or other circumstances which could result in a release of "BMP pollutants," the plan should include a prediction of the direction, rate of flow, and total quantity of the pollutants which could be released from the facility as result of each condition or circumstance.

c. Establish specific Best Management Practices to meet the objectives identified under paragraph b of this section, addressing each component or system capable of causing a release of "BMP pollutants."

d. Include any special conditions established in Section B.

e. Be reviewed by plant engineering staff and the plant manager.

5. Specific Requirements

The plan shall be consistent with the general guidance contained in the publication entitled "NPDES Best Management Practices Guidance Document," and shall include the following baseline BMPs as a minimum.

a. BMP Committee
b. Reporting of BMP Incidents
c. Risk Identification and Assessment
d. Employee Training
e. Inspections and Records
f. Preventive Maintenance
g. Good Housekeeping
h. Materials Compatibility
i. Security
j. Materials Inventory

6. SPCC Plans

The BMP plan may reflect requirements for Spill Prevention Control and Countermeasure (SPCC) plans under Section 311 of the Act and 40 CFR Part 151, and may incorporate any part of such plans into the BMP plan by reference.

7. Hazardous Waste Management

The permittee shall assure the proper management of solid and hazardous waste in accordance with the regulations promulgated under the Solid Waste Disposal Act, as amended by the Resource Conservation and Recovery Act of 1978 (RCRA) (40 U.S.C. 6901 et seq.) Management practices required under RCRA regulations shall be referenced in the BMP plan.

8. Documentation

The permittee shall maintain a description of the BMP plan at the facility and shall make the plan available upon request to NREPC personnel. Initial copies and modifications thereof shall be sent to the following addresses (with a copy to the appropriate Regional Office) when required by Section 3:

Energy and Environment Cabinet
Department for Environmental Protection
Division of Water/Surface Water Permits Branch
200 Fair Oaks Lane
Frankfort, Kentucky 40601

A list of Division of Water Regional Offices and the counties that they serve is included as Attachment A.

9. BMP Plan Modification

The permittee shall amend the BMP plan whenever there is a change in the facility or change in the operation of the facility that materially increases the potential for the ancillary activities to result in the release of "BMP pollutants."

PART V
Page V-3
Permit No.: KYG640000
AI No.: 35050

10. Modification for Ineffectiveness

If the BMP plan proves to be ineffective in achieving the general objective of preventing the release of "BMP pollutants," then the specific objectives and requirements under paragraphs b and c of Section 4, the permit, and/or the BMP plan shall be subject to modification to incorporate revised BMP requirements. If at any time following the issuance of this permit the BMP plan is found to be inadequate pursuant to a state or federal site inspection or plan review, the plan shall be modified to incorporate such changes necessary to resolve the concerns.

SECTION B. SPECIFIC CONDITIONS

1. Periodically Discharged Wastewaters Not Specifically Covered By Effluent Conditions

The permittee shall include in this BMP plan procedures and controls necessary for the handling of periodically discharged wastewaters such as intake screen backwash, meter calibration, fire protection, hydrostatic testing water, line flushing, etc.

2. New or Expanding Discharges to a High Quality Water

The following requirement applies only to new facilities or expanding facilities discharging directly into a surface water categorized as a High Quality Water:

The permittee shall include documentation in this BMP plan demonstrating the implementation of the requirements of PART II B – ADDITIONAL ANALYSIS, CONTROL MEASURES AND OTHER REQUIREMENTS.

Bowling Green Regional Office 1508 Westen Avenue Bowling Green, Kentucky 42104 (270) 746-7475 Allen, Barren, Butler, Edmonson, Grayson, Hart, Logan, Ohio, Simpson, Warren	London Regional Office 875 South Main Street London, Kentucky 40741 (606) 330-2080 Bell, Clay, Harlan, Jackson, Knox, Laurel, Leslie, McCreary, Owsley, Rockcastle, Whitley
Columbia Regional Office 2751 Campbellsville Road Columbia, Kentucky 42728 (270) 384-4734 Adair, Boyle, Casey, Clinton, Cumberland, Green, Larue, Lincoln, Marion, Metcalfe, Monroe, Nelson, Pulaski, Russell, Taylor, Washington, Wayne	Louisville Regional Office 9116 Leesgate Road Louisville, Kentucky 40222-5084 (502) 429-7122 Breckinridge, Bullitt, Hardin, Jefferson, Meade, Oldham, Shelby, Spencer
Florence Regional Office 8020 Veterans Memorial Drive, Suite 110 Florence, Kentucky 41042 (859) 525-4923 Boone, Bracken, Campbell, Carroll, Gallatin, Grant, Henry, Kenton, Owen, Pendleton, Trimble	Madisonville Regional Office Madisonville State Office Building 625 Hospital Drive Madisonville, Kentucky 42431-1683 (270) 824-7529 Caldwell, Christian, Crittenden, Daviess, Hancock, Henderson, Hopkins, McLean, Muhlenberg, Todd, Union, Webster
Frankfort Regional Office 643 Teton Trail, Suite B Frankfort, Kentucky 40601 (502) 564-3358 Anderson, Bourbon, Clark, Estill, Fayette, Franklin, Garrard, Harrison, Jessamine, Madison, Mercer, Montgomery, Nicholas, Powell, Robertson, Scott, Woodford	Morehead Regional Office 525 Hecks Plaza Drive Morehead, Kentucky 40351 (606) 783-8655 Bath, Boyd, Carter, Elliott, Fleming, Greenup, Lawrence, Lewis, Mason, Menifee, Morgan, Rowan
Hazard Regional Office 233 Birch Street, Suite 1 Hazard, Kentucky 41701 (606) 435-6022 Breathitt, Floyd, Johnson, Knott, Lee, Letcher, Magoffin, Martin, Perry, Pike, Wolfe	Paducah Regional Office 130 Eagle Nest Drive Paducah, Kentucky 42003 (270) 898-8468 Ballard, Calloway, Carlisle, Fulton, Graves, Hickman, Livingston, Lyon, Marshall, McCracken, Trigg

ERNIE FLETCHER
GOVERNOR

ENVIRONMENTAL AND PUBLIC PROTECTION CABINET
DEPARTMENT FOR ENVIRONMENTAL PROTECTION
DIVISION OF WATER
14 REILLY ROAD
FRANKFORT, KENTUCKY 40601
www.kentucky.gov

TERESA J. HILL
SECRETARY

May 8, 2007

David Shehee
Kentucky American Northern Division
6300 Cedar Creek LN
Lexington KY, 40515

RE: PWSID# KY0940430
SOC Detection

Dear Mr. Shehee:

This letter is to inform you of your compliance status as it relates to the required SOC monitoring and reporting requirements. During a recent review of your analytical data, a sample dated July 12, 2006 was reported with a detection of 0.0003 mg/L for 2,4-D. The detection limit for 2,4-D is 0.00022 mg/L.

In accordance to 401 KAR 8:400 Section 1(7), your system is required to begin quarterly monitoring for 2,4-D. Kentucky American Northern Division will be eligible to submit a written request for a reduction in monitoring for 2,4-D after four (4) quarters of monitoring have been reported with all results reliably and consistently below the maximum contaminant level. The monitoring schedule for 2,4-D can not be reduced until Kentucky American Northern Division requests and receives a written approval from the Division of Water.

If you have any questions or need further assistance please contact Brian Chitti at (502) 564-3410 ext. 555.

Sincerely,

Brian M. Chitti

Brian M. Chitti, Compliance Officer
Drinking Water Branch
Division of Water

Drinking Water Files

KENTUCKY-AMERICAN WATER COMPANY
CASE NO. 2012-00096
COMMISSION STAFF'S FIRST REQUEST FOR INFORMATION

Witness: Keith Cartier / Lance Williams

19. Provide each notice of violation that KDOW has issued against the Owenton Water Treatment Plant since Kentucky-American's acquisition of the plant.

Response:

KAW has not been issued a notice of violation since acquiring the plant in 2005.

KENTUCKY-AMERICAN WATER COMPANY
CASE NO. 2012-00096
COMMISSION STAFF'S FIRST REQUEST FOR INFORMATION

Witness: Keith Cartier / Lance Williams

20.

a. State whether Kentucky-American has a systematic water loss prevention and leak detection plan for the Northern Division.

b. If yes:
   (1) State when this plan was developed;
   (2) State when Kentucky-American implemented this plan;
   (3) State the level of the Northern Division's unaccounted for and non-revenue water when the plan was initially implemented; and
   (4) State the number of Kentucky-American employees who are devoted to water loss prevention efforts for the Northern Division.

Response:

a. Kentucky American does have a comprehensive and strategic water loss prevention plan that encompasses all KAW service areas including the Northern Division.

b.

(1) Kentucky American Water has performed non revenue water monitoring activities such as leak detection since the late 1980's, and those activities have evolved over time. Specifically tracking and grouping activities in a more formal structure began about 2005. A Commission ordered study (performed by Gannett Fleming) served to refine components of the plan, and Kentucky American Water has been reporting progress on implementing recommendations from that study monthly since 2010. Components include leak detection, right-of-way and creek crossing inspections, flushing monitoring, completion of service orders for zero consumption and consumption on inactive accounts. Although the Gannett study indicated sub-meter zones were not practical in the Central Division, Kentucky American Water recently analyzed their applicability in the Northern Division and is proceeding with monitoring those zones to better focus non-revenue water activities in that area.

(2) It is difficult to provide a precise time frame during which leak detection began. The more formal grouping of activities began occurring in 2005.

(3) Please refer to PSC DR #15. Separate calculations for Northern Division were not calculated prior to recent requests from the Commission, as non-revenue water and unaccounted-for-water were calculated and reported on a consolidated Kentucky American Water basis.

KENTUCKY-AMERICAN WATER COMPANY
CASE NO. 2012-00096
COMMISSION STAFF'S FIRST REQUEST FOR INFORMATION

(4) The Northern Division field staff is comprised of four positions that address all field requirements including meter reading, service order completion, distribution maintenance, water quality sampling and leak detection. None are specifically dedicated to non-revenue water activities. Central Division supervisory personnel occasionally provide additional leak detection support when additional expertise may be required.

KENTUCKY-AMERICAN WATER COMPANY
CASE NO. 2012-00096
COMMISSION STAFF'S FIRST REQUEST FOR INFORMATION

Witness: Keith Cartier / Lance Williams

21. State the required average daily production required of the Owenton Water Treatment Plant if unaccounted-for water loss in the Northern Division is reduced to 15 percent.

Response:

Assuming an unaccounted-for water loss of fifteen percent and based on system delivery for 2011, average daily production would have been 735,662 gallons.

KENTUCKY-AMERICAN WATER COMPANY
CASE NO. 2012-00096
COMMISSION STAFF'S FIRST REQUEST FOR INFORMATION

Witness: Lance Williams

22. Describe the effect on the need for the proposed facilities if unaccounted-for water loss within the Northern Division is reduced to 15 percent.

Response:

None. The need for the proposed project is driven by the inadequacies and lack of redundancy of the Owenton Water Treatment Plant and raw water intake, which would not be addressed with a reduction of the unaccounted-for water loss within the Northern Division to 15 percent.

KENTUCKY-AMERICAN WATER COMPANY
CASE NO. 2012-00096
COMMISSION STAFF'S FIRST REQUEST FOR INFORMATION

Witness: Lance Williams/Linda Bridwell

23. State the estimated salvage value of the Owenton Water Treatment Plant when decommissioned. Show all calculations, state all assumptions, and provide all work papers that were used to produce this estimate.

Response:

It is premature for KAW to determine the estimated salvage value of the Owenton Water Treatment Plant when decommissioned because KAW is still evaluating the potential uses for the Plant after the Northern Division connection is complete. KAW is considering whether the facilities could be utilized for KAW's own use(s), as well as a potential sale or donation of the facilities.

KENTUCKY-AMERICAN WATER COMPANY
CASE NO. 2012-00096
COMMISSION STAFF'S FIRST REQUEST FOR INFORMATION

Witness: Lance Williams/Linda Bridwell

24. State the expected cost of decommissioning the Owenton Water Treatment Plant. Show all calculations, state all assumptions, and provide all work papers that were used to produce this estimate.

Response:

It is premature for KAW to determine the expected cost of decommissioning the Owenton Water Treatment Plant because KAW is still evaluating the potential uses for the Plant after the Northern Division connection is complete. KAW is considering whether the facilities could be utilized for KAW's own use(s), as well as a potential sale or donation of the facilities.

KENTUCKY-AMERICAN WATER COMPANY
CASE NO. 2012-00096
COMMISSION STAFF'S FIRST REQUEST FOR INFORMATION

Witness: Lance Williams / Keith Cartier

25. State whether, upon completion of the proposed facilities, any portions of the Owenton Water Treatment Plant will remain in service or be retained for emergency operations. If yes, identify the existing facilities to be retained and explain how each facility will be used.

Response:

Although KAW does not expect or plan for the Owenton Water Treatment Plant to remain in service or be retained for emergency operations, it is premature for KAW to make a final determination on that issue. KAW is still evaluating the potential uses for the Plant after the Northern Division connection is complete. KAW is considering whether the facilities could be utilized for KAW's own use(s), as well as a potential sale or donation of the facilities.

KENTUCKY-AMERICAN WATER COMPANY
CASE NO. 2012-00096
COMMISSION STAFF'S FIRST REQUEST FOR INFORMATION

Witness: Lance Williams

26. State whether any hazardous material or other materials with special disposal requirements will result from the decommissioning of the Owenton Water Treatment Plant. If yes, identify the materials and the special disposal requirements.

Response:

It is premature for KAW to determine whether any hazardous material or other materials with special disposal requirements will result from decommissioning the Owenton Water Treatment Plant because KAW is still evaluating the potential uses for the Plant after the Northern Division connection is complete. KAW is considering whether the facilities could be utilized for KAW's own use(s), as well as a potential sale or donation of the facilities. Having said that, if the plant is decommissioned, KAW does not expect any special disposal requirements, but an environmental assessment has not been completed.

KENTUCKY-AMERICAN WATER COMPANY
CASE NO. 2012-00096
COMMISSION STAFF'S FIRST REQUEST FOR INFORMATION

Witness: Lance Williams

27. Provide the projected maximum daily demand for the Northern Division for each year from 2013 until 2032.

Response:

The projected maximum daily demands through 2025 are listed below. There are no projections beyond 2025.

2013 – 1.83 mgd
2014 – 1.84 mgd
2015 – 1.85 mgd
2016 – 1.88 mgd
2017 – 1.90 mgd
2018 – 1.93 mgd
2019 – 1.95 mgd
2020 – 1.98 mgd
2021 – 2.00 mgd
2022 – 2.01 mgd
2023 – 2.03 mgd
2024 – 2.05 mgd
2025 – 2.07 mgd

KENTUCKY-AMERICAN WATER COMPANY
CASE NO. 2012-00096
COMMISSION STAFF'S FIRST REQUEST FOR INFORMATION

Witness: Keith Cartier / Lance Williams

28. State for each year for the period from January 1, 2006 through December 31, 2011 Kentucky-American's total annual purchases from each water supplier for the Northern Division.

Response:

Water Supplier	Year	Total Annual Purchase (gallons)
Gallatin County Water District	2006	7,240,716
	2007	6,453,600
	2008	7,712,000
	2009	7,838,233
	2010	8,936,000
	2011	10,185,000
Carroll County Water District #1	2006	17,116,227
	2007	19,996,290
	2008	20,594,820
	2009	19,159,047
	2010	19,919,705
	2011	21,092,444
Georgetown Municipal Water & Sewer Service	2006	22,314,456
	2007	760,000
	2008	0
	2009	0
	2010	0
	2011	13,794,000

KENTUCKY-AMERICAN WATER COMPANY
CASE NO. 2012-00096
COMMISSION STAFF'S FIRST REQUEST FOR INFORMATION

Witness: Keith Cartier / Lance Williams

29. Refer to Direct Testimony of Lance E. Williams at 2. Mr. Williams states that small areas of the Northern Division "cannot hydraulically be served from the [Owenton] treatment plant."
    a. State the number of customers who presently cannot be hydraulically served from the Owenton Water Treatment Plant.
    b. State whether the proposed facilities will enable Kentucky-American to hydraulically serve these areas without purchasing water from other water suppliers. Explain.
    c. State whether Kentucky-American intends to continue purchases from other water suppliers once the proposed facilities are constructed. Explain.

Response:

a. Although not an exact match, areas that have been segregated to be served through purchased water contracts are the Glencoe, Wheatley and New Columbus areas. Based upon May 2012 sales data, there are approximately 143 customers in the Glencoe area (Gallatin Co Water District), 313 in the Wheatley area (Carroll County Water District), and 225 in the New Columbus area (Georgetown Municipal).

b. The proposed facilities will enable service to the New Columbus area currently served through the Georgetown connection. Additional analysis is required to determine whether the Glencoe and Wheatley areas can be served.

c. In the short term, purchases will continue for the Glencoe and Wheatley areas. Purchases from Georgetown Municipal are expected to be discontinued, although the connection will likely be maintained for emergency purposes.

KENTUCKY-AMERICAN WATER COMPANY
CASE NO. 2012-00096
COMMISSION STAFF'S FIRST REQUEST FOR INFORMATION

Witness: Lance Williams/Linda Bridwell

30. Refer to Direct Testimony of Lance E. Williams at 3; "Engineering Feasibility Study Report for Supplying Kentucky American Water's Northern District Distribution System" at 1.
    a. Define the term "redundancy."
    b. Identify the statutes or administrative regulations that require redundancy in a water treatment or distribution system.
    c. Describe how redundancy can be employed in a surface water treatment plant.
    d. State whether Kentucky-American's reliance on a single 16-inch water transmission from KRS II to the Northern Division would meet the requirement of redundancy. Explain.
    e. Assume a disruption at KRS II or a rupture in the proposed 16-inch water transmission main from KRS II to the Northern Division. Describe how Kentucky-American would provide water service during the disruption. Identify the number of customers whom Kentucky-American would not be able to serve through alternative means.
    f. State whether the requirement of redundancy would require Kentucky-American to continue to operate the Owenton Water Treatment Plant, but construct a connection from KRS II to the Northern Division. Explain.

Response:

a) Redundancy is the provision of necessary components in a system which allows the system to function as designed with any single component out of service.

b) 401 KAR 8:020, Section 6 incorporates the water plant design criteria set forth in the Recommended Standards for Water Works (2003 edition) which is published by the Great Lakes-Upper Mississippi River Board of State Public Health and Environmental Managers. Those recommended standards include redundancy. Additionally, 807 KAR 5:066, Section 4(4) requires a minimum storage capacity equal to the average daily consumption.

c) Redundancy for surface water treatment plants can be employed by examining each component of the treatment cycle and evaluating single points of failure that would prohibit the treatment plant from functioning as designed. Redundant and readily replaceable components can be utilized to address these single points of failure.

d) In addition to the proposed 16-inch transmission main from KRS II to the Northern Division, a new 300,000 gallon elevated storage tank will be constructed north of Monterey, and a new 600,000 gallon elevated storage tank will be constructed outside of Owenton. All 3 of these components, in addition to KRS II and the existing distribution system storage tanks, will provide redundancy to the Northern Division.

KENTUCKY-AMERICAN WATER COMPANY
CASE NO. 2012-00096
COMMISSION STAFF'S FIRST REQUEST FOR INFORMATION

In the event that a main break occurs in the 16-inch transmission main, KRS II will supply points south of the main break while the storage tanks will provide temporary supply to the remaining parts of the system. The 16-inch main is a readily replaceable component which can relatively easily be repaired and/or replaced.

e) KAW would provide service during a disruption to the 16-inch main as described in part d of this question. KAW would provide service during a disruption to KRS II by utilizing storage within the KAW distribution system storage tanks. KAW would also be capable of utilizing existing connections with Georgetown Municipal, Carroll County, and Gallatin County to supply many areas outside of Owenton as needed. Given the built-in reliability and redundancy of KRS II and the fact that the 16-inch main is easily replaceable, KAW anticipates that service can be maintained to all of our customers in the Northern Division during a disruption.

f) No, the redundancy of the Northern Division Connection is explained in part d of this question.

KENTUCKY-AMERICAN WATER COMPANY
CASE NO. 2012-00096
COMMISSION STAFF'S FIRST REQUEST FOR INFORMATION

Witness: Keith Cartier / Lance Williams

31.

a. List and describe all disruptions in service or service degradations (e.g., boiled water advisories) that the Northern Division has experienced since January 1, 2006 due to the lack of redundancy in its treatment process. The description should include the date of the disruption, its length, and the actions taken to resolve the disruption.

b. For each disruption listed in Item 31(a), state whether Kentucky-American was required to notify KDOW of the disruption. If notification was required, provide a copy of the notification.

c. For each disruption listed in Item 31(a), state whether Kentucky-American was required to notify the Commission of the disruption. If notification was required, provide a copy of the notification.

Response:

a. To date, the Northern Division has not experienced any disruptions or service degradations attributable to a lack of redundancy in its treatment process.

b. Not applicable.

c. Not applicable.

KENTUCKY-AMERICAN WATER COMPANY
CASE NO. 2012-00096
COMMISSION STAFF'S FIRST REQUEST FOR INFORMATION

Witness: Keith Cartier / Lance Williams

32. Refer to Direct Testimony of Lance E. Williams at 4; "Engineering Feasibility Study Report for Supplying Kentucky American Water's Northern District Distribution System" at 2.
    a. Define or describe "minor treatment upsets" with the claricone.
    b. State for each year from January 1, 2006 to December 31, 2011 the number of times that a "minor treatment upset" with the claricone required the Northern Division to rely solely on its storage capacity.

Response:

a. A minor treatment upset can be described as an event in which the clarifier effluent is not meeting treatment parameters, requiring an intervention by plant operators to address the issue. Upsets may result from a change in source water quality, a mechanical failure with the influent, drain, and, or waste valves, or a chemical reaction problem as a result of coagulant or polymer feeds.

b. Minor treatment upsets are not logged if they do not impact compliance or if they are resolved during the normal course of an operator's shift. Claricone treatment upsets recorded in the operator's daily log included:

	# Recorded
2006	0
2007	1
2008	4
2009	2
2010	3
2011	1

None of the instances impacted compliance, with the system needs supplied by storage capacity.

KENTUCKY-AMERICAN WATER COMPANY
CASE NO. 2012-00096
COMMISSION STAFF'S FIRST REQUEST FOR INFORMATION

Witness: Lance Williams / Keith Cartier

33.

a. State the number of Northern Division customers who would be unserved or under-served if the claricone at the Owenton Water Treatment Plant is out of service for more than a few hours.
b. State the total number of customers presently within the Northern Division.

Response:

a. If the claricone were down for an estimated 8 to 12 hour period, and the plant were unable to produce water, the number of customers impacted would vary depending on the system demand, the duration of the downtime and the location of the customer. Approximately 681 customers currently served by purchased water would remain in service. All other customers would begin experiencing issues depending on where they are in the system, the level of water in the tanks supporting their specific locations and the customer demand for water at the time of the service interruption.

b. At end of May 2012, the Northern Division had 3,862 service connections.

KENTUCKY-AMERICAN WATER COMPANY
CASE NO. 2012-00096
COMMISSION STAFF'S FIRST REQUEST FOR INFORMATION

Witness: Keith Cartier/Lance E. Williams

34. Refer to Direct Testimony of Lance E. Williams at 4; "Engineering Feasibility Study Report for Supplying Kentucky American Water's Northern District Distribution System" at 2.
    a. List the chemicals used in the treatment process at the Owenton Treatment Plant.
    b. List the chemicals used in the treatment process at KRS II.
    c. Describe the size of each chemical storage facility presently available at the Owenton Water Treatment Plant and state the amount of chemicals that each can hold.
    d. Provide the invoices for all chemical purchases for the Owenton Water Treatment Plant for the period between January 1, 2006 and December 31, 2011.
    e. For each chemical listed in Item 34(a), state the purchase size that constitutes a bulk purchase.
    f. Provide an estimate of the annual savings in chemical expense if modifications were made to the Owenton Water Treatment Plant to enable bulk chemical purchases. State all assumptions, show all calculations, and provide the work papers used to derive this estimate.
    g. Identify the changes or modifications to the Owenton Water Treatment Plant to enable bulk purchases of chemicals.

Response:

a) Chemicals used at the Owenton Water Treatment Plant include: chlorine, sodium hydroxide, ferric polymer blend, polymer, fluoride, sodium thiosulfate, carbon, sodium permanganate, sulfuric acid, and copper sulfate.

b) Chemicals used at KRS II include: chlorine, sodium hydroxide, aqueous ammonia, polyaluminum chloride, polymer, fluoride, sodium thiosulfate, carbon, potassium permanganate, zinc orthophosphate, sludge polymer, and sodium chloride.

c) For ferric polymer, there is a 4200-gallon bulk storage tank. There is a 55-gallon capacity carbon slurry tank to which carbon is added. Carbon is supplied in 45-pound bags. There are no other chemical storage facilities. Instead, five gallon jugs of sodium permanganate are brought in as needed. All other chemicals are handled in 55 gallon drums and brought in as needed. The chlorine room has limited capacity for 150-pound cylinders.

d) Chemical invoices are attached.

e) Typical bulk size is 4,000 gallons, although carbon can be delivered in 1,000 pound super sacks and chlorine is handled by 2,000 pound cylinders.

KENTUCKY-AMERICAN WATER COMPANY
CASE NO. 2012-00096
COMMISSION STAFF'S FIRST REQUEST FOR INFORMATION

f) Although the primary objectives of the Chemical Bulk Storage Improvements Project are to allow for more efficient, safe, and secure storage of treatment chemicals, the project will also allow for savings in the bulk purchase of chemicals. The savings are primarily attributable to the bulk purchase of Sodium Hydroxide. An estimate for these annual savings is detailed below. The estimate is based on the current vendor prices.

Chemical	Amount (lbs.)	Current Cost per lb.	Bulk Cost per lb.	Savings for Bulk Purchase
Sodium Hydroxide 30%	96237	$0.20	$0.10	$9,623.70
Sodium Hydroxide 50%	43901	$0.22	$0.16	$2,634.06
			TOTAL ANNUAL SAVINGS:	**$12,258**

g) Refer to the improvements noted in the Strand Associates, Inc. letter dated August 29, 2008 that is attached to the response to Staff Item No. 1.

Brenntag Mid-South, Inc.

1405 Highway 136 W • P.O. BOX 20
Henderson, Kentucky 42419-0020

BRENNTAG [redacted]

5014174852
NSX
NFR

AMT 2283.30

INVOICE#: BMS133278 INV DATE: 12/14/11 *** PAGE 1 OF 1 ***
DUE DATE: 1/28/12

SOLD TO:
AMERICAN SHARED WATER SERVICE
FBO KY AMER WATER (OWENTON)
PO BOX 5610
CHERRY HILL NJ 08034

SHIP TO:
KY AMERICAN WATER COMPANY
OWENTON WATER PLANT
220 WATER PLANT LANE
OWENTON KY 40359

FEDERAL ID #: 610504545 DATE SHIPPED: 12/14/11
B/L #. . . .: 884075-00 ✓
CUSTOMER # .: 520451
CUSTOMER PO#: 15153297 ov# 1035496 3

TERMS . : NET 45 DAYS
SHIP WHS: 40 SALESPRSN: 404
SHIP VIA: OUR TRUCK - PKG
FOB . . : DELIVERED
TAX EX# : 40590

UNITS SHIPPED	PROD #	WGT/GAL	TOTAL QTY	UNIT PRICE	EXTENDED
59.0000	902206	1.000	2655.0000#	.8600	2,283.30
45.0000 # BAG			CARBON ACTIV AQUA NUCHAR >A F/S		

RECEIVED
DEC 27 2011
SSC-MAILROOM

QUESTIONS, CALL 502-863-2874

****
* REMIT TO ADDRESS: *
* BRENNTAG MID-SOUTH, INC *
* 3796 RELIABLE PARKWAY *
* CHICAGO IL 60686-0037 *
****

MERCHANDISE 2,283.30

PAID ON OR PRIOR TO 1/28/12 INVOICE TOTAL 2,283.30

PAID AFTER 1/28/12 INVOICE TOTAL ~~2,328.97~~

Original Document

Atlanta, GA · Bartonville, IL · Calvert City, KY · Chattanooga, TN · Clearwater, FL · Columbus, OH · Georgetown, KY · Greeneville, TN · Henderson, KY · Huntsville, AL · Indianapolis, IN · Kansas City, MO · Kennesaw, GA · Louisville, KY · Memphis, TN · Miami, FL · Nitro, WV · Orlando, FL · Springfield, MO · St. Albans, WV · St. Louis, MO · Tampa, FL · Terre Haute, IN · Valdosta, GA

*** ALL SALES SUBJECT TO AND GOVERNED BY THE TERMS AND CONDITIONS SET FORTH ON THE REVERSE SIDE ***

Brenntag Mid-South, Inc.

1405 Highway 136 W • P.O. BOX 20
Henderson, Kentucky 42419-0020

BRENNTAG

50141748
NSX

INVOICE#: BMS122270 INV DATE: 11/22/11 *** PAGE 1 OF 1 ***
DUE DATE: 1/06/12

SOLD TO:
AMERICAN SHARED WATER SERVICE
FBO KY AMER WATER (OWENTON)
PO BOX 5610
CHERRY HILL NJ 08034

SHIP TO:
KY AMERICAN WATER COMPANY
OWENTON WATER PLANT
220 WATER PLANT LANE
OWENTON KY 40359

FEDERAL ID #: 610504545 DATE SHIPPED: 11/22/11 TERMS . : NET 45 DAYS
B/L #. .. ...: 870518-00-- - SHIP WHS: 40 SALESPRSN: 404
CUSTOMER # .: 520451 SHIP VIA: OUR TRUCK - PKG
CUSTOMER PO#: 15153297 FOB . . : DELIVERED
TAX EX# : 40590

UNITS SHIPPED	PROD #	WGT/GAL	TOTAL QTY	UNIT PRICE	EXTENDED
60.0000	902206	1.000	2700.0000#	.8600	2,322.00
45.0000 # BAG			CARBON ACTIV AQUA NUCHAR >A F/S		

10352763 OV

QUESTIONS, CALL 502-863-2874

****
* REMIT TO ADDRESS: *
* BRENNTAG MID-SOUTH, INC *
* 3796 RELIABLE PARKWAY *
* CHICAGO IL 60686-0037 *
****

MERCHANDISE 2,322.00

Received
DEC 02 2011
SSC-Mailroom

PAID ON OR PRIOR TO 1/06/12 INVOICE TOTAL 2,322.00

PAID AFTER 1/06/12 INVOICE TOTAL 2,368.44

Original Document

Atlanta, GA
Bartonville, IL
Calvert City, KY
Chattanooga, TN
Clearwater, FL
Columbus, OH
Georgetown, KY
Greeneville, TN
Henderson, KY
Huntsville, AL
Indianapolis, IN
Kansas City, MO
Kennesaw, GA
Louisville, KY
Memphis, TN
Miami, FL
Nitro, WV
Orlando, FL
Springfield, MO
St. Albans, WV
St. Louis, MO
Tampa, FL
Terre Haute, IN
Valdosta, GA

*** ALL SALES SUBJECT TO AND GOVERNED BY THE TERMS AND CONDITIONS SET FORTH ON THE REVERSE SIDE ***

Brenntag Mid-South, Inc.

1405 Highway 136 W • P.O. BOX 20
Henderson, Kentucky 42419-0020

BRENNTAG

5014174 8sc
NSX
NFR

Amt 2322.00

INVOICE#: BMS111506 INV DATE: 11/02/11 *** PAGE 1 OF 1 ***
DUE DATE: 12/17/11

SOLD TO:
AMERICAN SHARED WATER SERVICE
FBO KY AMER WATER (OWENTON)
PO BOX 5610
CHERRY HILL NJ 08034

SHIP TO:
KY AMERICAN WATER COMPANY
OWENTON WATER PLANT
220 WATER PLANT LANE
OWENTON KY 40359

FEDERAL ID #: 610504545 DATE SHIPPED: 11/02/11 TERMS . : NET 45 DAYS
B/L #. . . . .: 855407-00 ✓ SHIP WHS: 40 SALESPRSN: 404
CUSTOMER # .: 520451 SHIP VIA: OUR TRUCK - PKG
CUSTOMER PO#: 15153297 ov# 10357007 FOB . . : DELIVERED
TAX EX# : 40590

UNITS SHIPPED	PROD #	WGT/GAL	TOTAL QTY	UNIT PRICE	EXTENDED
60.0000	902206	1.000	2700.0000#	.8600	2,322.00
45.0000 # BAG			CARBON ACTIV AQUA NUCHAR >A F/S		

Received
NOV - 7 2011
SSC-Mailroom

QUESTIONS, CALL 502-863-2874

REMIT TO ADDRESS:
BRENNTAG MID-SOUTH, INC
3796 RELIABLE PARKWAY
CHICAGO IL 60686-0037

MERCHANDISE 2,322.00

PAID ON OR PRIOR TO 12/17/11 INVOICE TOTAL 2,322.00

PAID AFTER 12/17/11 INVOICE TOTAL ~~2,368.44~~

Original Document

Atlanta, GA	Columbus, OH	Indianapolis, IN	Miami, FL	St. Louis, MO
Bartonville, IL	Georgetown, KY	Kansas City, MO	Nitro, WV	Tampa, FL
Calvert City, KY	Greeneville, TN	Kennesaw, GA	Orlando, FL	Terre Haute, IN
Chattanooga, TN	Henderson, KY	Louisville, KY	Springfield, MO	Valdosta, GA
Clearwater, FL	Huntsville, AL	Memphis, TN	St. Albans, WV	

*** ALL SALES SUBJECT TO AND GOVERNED BY THE TERMS AND CONDITIONS SET FORTH ON THE REVERSE SIDE ***

Brenntag Mid-South, Inc.
1405 Highway 136 W • P.O. BOX 20
Henderson, Kentucky 42419-0020

BRENNTAG

50141748 SL
NSX

AMT 2322.00

INVOICE#: BMS099374 INV DATE: 10/10/11 *** PAGE 1 OF 1 ***
DUE DATE: 11/24/11

SOLD TO:
AMERICAN SHARED WATER SERVICE
FBO KY AMER WATER (OWENTON)
PO BOX 5610
CHERRY HILL NJ 08034

SHIP TO:
KY AMERICAN WATER COMPANY
OWENTON WATER PLANT
220 WATER PLANT LANE
OWENTON KY 40359

FEDERAL ID #: 610504545 DATE SHIPPED: 10/10/11
B/L #. . . . .: 838427-00 ✓
CUSTOMER # .: 520451
CUSTOMER PO#: 15153297 OV# 10348780

TERMS . : NET 45 DAYS
SHIP WHS: 40 SALESPRSN: 404
SHIP VIA: OUR TRUCK - PKG
FOB . . : DELIVERED
TAX EX# : 40590

UNITS SHIPPED	PROD #	WGT/GAL	TOTAL QTY	UNIT PRICE	EXTENDED
60.0000	902206	1.000	2700.0000#	.8600	2,322.00
45.0000 # BAG			CARBON ACTIV AQUA NUCHAR	>X F/S	

{{{ GS ROBINS PRODUCT NUMBER 400000080-FB45 }}}

RECEIVED
OCT 17 2011
SSC-MAILROOM

QUESTIONS, CALL 502-863-2874

****
* REMIT TO ADDRESS: *
* BRENNTAG MID-SOUTH, INC *
* 3796 RELIABLE PARKWAY *
* CHICAGO IL 60686-0037 *
********** MERCHANDISE 2,322.00

PAID ON OR PRIOR TO 11/24/11 INVOICE TOTAL 2,322.00

PAID AFTER 11/24/11 INVOICE TOTAL ~~2,368.44~~

Original Document

Atlanta, GA	Columbus, OH	Indianapolis, IN	Miami, FL	St. Louis, MO
Bartonville, IL	Georgetown, KY	Kansas City, MO	Nitro, WV	Tampa, FL
Calvert City, KY	Greeneville, TN	Kennesaw, GA	Orlando, FL	Terre Haute, IN
Chattanooga, TN	Henderson, KY	Louisville, KY	Springfield, MO	Valdosta, GA
Clearwater, FL	Huntsville, AL	Memphis, TN	St. Albans, WV	

*** ALL SALES SUBJECT TO AND GOVERNED BY THE TERMS AND CONDITIONS SET FORTH ON THE REVERSE SIDE ***

Brenntag Mid-South, Inc.
1405 Highway 136 W • P.O. BOX 20
Henderson, Kentucky 42419-0020

5014 1748 DC
$ 2322.00
NSY

BRENNTAG

INVOICE#: BMS085670 INV DATE: 9/16/11 *** PAGE 1 OF 1 ***
DUE DATE: 10/31/11

SOLD TO:
AMERICAN SHARED WATER SERVICE
FBO KY AMER WATER (OWENTON)
PO BOX 5610
CHERRY HILL NJ 08034

SHIP TO:
KY AMERICAN WATER COMPANY
OWENTON WATER PLANT
220 WATER PLANT LANE
OWENTON KY 40359

FEDERAL ID #: 610504545 DATE SHIPPED: 9/16/11 TERMS . : NET 45 DAYS
B/L #. . . . .: 820787-00 SHIP WHS: 40 SALESPRSN: 404
CUSTOMER # .: 520451 SHIP VIA: OUR TRUCK - PKG
CUSTOMER PO#: 15153297 FOB . . : DELIVERED
TAX EX# : 40590

UNITS SHIPPED	PROD #	WGT/GAL	TOTAL QTY	UNIT PRICE	EXTENDED
60.0000	902206	1.000	2700.0000#	.8600	2,322.00
45.0000 # BAG			CARBON ACTIV AQUA NUCHAR >X F/S		

OV# 10346565

RECEIVED
SEP 26 2011
SSC-MAILROOM

QUESTIONS, CALL 502-863-2874

****
* REMIT TO ADDRESS: *
* BRENNTAG MID-SOUTH, INC *
* 3796 RELIABLE PARKWAY *
* CHICAGO IL 60686-0037 *
****

MERCHANDISE 2,322.00

PAID ON OR PRIOR TO 10/31/11 INVOICE TOTAL 2,322.00

PAID AFTER 10/31/11 INVOICE TOTAL 2,368.44

Original Document

Atlanta, GA
Bartonville, IL
Calvert City, KY
Chattanooga, TN
Clearwater, FL
Columbus, OH
Georgetown, KY
Greeneville, TN
Henderson, KY
Huntsville, AL
Indianapolis, IN
Kansas City, MO
Kennesaw, GA
Louisville, KY
Memphis, TN
Miami, FL
Nitro, WV
Orlando, FL
Springfield, MO
St. Albans, WV
St. Louis, MO
Tampa, FL
Terre Haute, IN
Valdosta, GA

*** ALL SALES SUBJECT TO AND GOVERNED BY THE TERMS AND CONDITIONS SET FORTH ON THE REVERSE SIDE ***

Brenntag Mid-South, Inc.

1405 Highway 136 W • P.O. BOX 20
Henderson, Kentucky 42419-0020

BRENNTAG

50141748
DC
$ 2322.00
NJ4

INVOICE#: BMS071349 INV DATE: 8/19/11 *** PAGE 1 OF 1 ***
DUE DATE: 10/03/11

SOLD TO:
AMERICAN SHARED WATER SERVICE
FBO KY AMER WATER (OWENTON)
PO BOX 5610
CHERRY HILL NJ 08034

SHIP TO:
KY AMERICAN WATER COMPANY
OWENTON WATER PLANT
220 WATER PLANT LANE
OWENTON KY 40359

FEDERAL ID #: 610504545 DATE SHIPPED: 8/19/11 TERMS . : NET 45 DAYS
B/L #. . . .: 802155-00 SHIP WHS: . . 24 SALESPRSN: 404
CUSTOMER #. .: 520451 SHIP VIA: OUR TRUCK - PKG
CUSTOMER PO#: 15153297 FOB . . : DELIVERED
TAX EX# : 40590

UNITS SHIPPED	PROD #	WGT/GAL	TOTAL QTY	UNIT PRICE	EXTENDED
60.0000	902206	1.000	2700.0000#	.8600	2,322.00
45.0000 # BAG			CARBON ACTIV AQUA NUCHAR >X F/S		

{{{ GS ROBINS PRODUCT NUMBER 400000080-FB45 }}}

OVH
1034361O

RECEIVED
AUG 31 2011
SSC-MAILROOM

QUESTIONS, CALL 502-863-2874

****
* REMIT TO ADDRESS: *
* BRENNTAG MID-SOUTH, INC *
* 3796 RELIABLE PARKWAY *
* CHICAGO IL 60686-0037 *
****

MERCHANDISE 2,322.00

PAID ON OR PRIOR TO 10/03/11 INVOICE TOTAL 2,322.00

PAID AFTER 10/03/11 INVOICE TOTAL 2,368.44

Original Document

Atlanta, GA	Columbus, OH	Indianapolis, IN	Miami, FL	St. Louis, MO
Bartonville, IL	Georgetown, KY	Kansas City, MO	Nitro, WV	Tampa, FL
Calvert City, KY	Greeneville, TN	Kennesaw, GA	Orlando, FL	Terre Haute, IN
Chattanooga, TN	Henderson, KY	Louisville, KY	Springfield, MO	Valdosta, GA
Clearwater, FL	Huntsville, AL	Memphis, TN	St. Albans, WV	

*** ALL SALES SUBJECT TO AND GOVERNED BY THE TERMS AND CONDITIONS SET FORTH ON THE REVERSE SIDE ***

Brenntag Mid-South, Inc.

1405 Highway 136 W • P.O. BOX 20
Henderson, Kentucky 42419-0020

RECEIVED
AUG 15 2011
SSC-MAILROOM

BRENNTAG

50141748
DC
$ 2322.00
NJX

INVOICE#: BMS060986 INV DATE: 8/01/11 *** PAGE 1 OF 1 ***
DUE DATE: 9/15/11

SOLD TO:
AMERICAN SHARED WATER SERVICE
FBO KY AMER WATER (OWENTON)
PO BOX 5610
CHERRY HILL NJ 08034

SHIP TO:
KY AMERICAN WATER COMPANY
OWENTON WATER PLANT
220 WATER PLANT LANE
OWENTON KY 40359

FEDERAL ID #: 610504545 DATE SHIPPED: 8/01/11
B/L #. . . . : 787972-00
CUSTOMER # . : 520451
CUSTOMER PO#: 15153297

TERMS . : NET 45 DAYS
SHIP WHS: 20 SALESPRSN: 404
SHIP VIA: CC - PKG
FOB . . : PREPAID
TAX EX# : 40590

UNITS SHIPPED	PROD #	WGT/GAL	TOTAL QTY	UNIT PRICE	EXTENDED
60.0000	902206	1.000	2700.0000#	.8600	2,322.00
45.0000 # BAG			CARBON ACTIV AQUA NUCHAR 3X F/S		

OVH
10341835

QUESTIONS, CALL 502-863-2874

****
* REMIT TO ADDRESS: *
* BRENNTAG MID-SOUTH, INC *
* 3796 RELIABLE PARKWAY *
* CHICAGO IL 60686-0037 *
****

MERCHANDISE	2,322.00
PAID ON OR PRIOR TO 9/15/11 INVOICE TOTAL	2,322.00
PAID AFTER 9/15/11 INVOICE TOTAL	2,368.44

Original Document

Atlanta, GA	Columbus, OH	Indianapolis, IN	Miami, FL	St. Louis, MO
Bartonville, IL	Georgetown, KY	Kansas City, MO	Nitro, WV	Tampa, FL
Calvert City, KY	Greeneville, TN	Kennesaw, GA	Orlando, FL	Terre Haute, IN
Chattanooga, TN	Henderson, KY	Louisville, KY	Springfield, MO	Valdosta, GA
Clearwater, FL	Huntsville, AL	Memphis, TN	St. Albans, WV	

*** ALL SALES SUBJECT TO AND GOVERNED BY THE TERMS AND CONDITIONS SET FORTH ON THE REVERSE SIDE ***

126 Chouteau Avenue, St. Louis MO 63102
2627 Route 121 NW, Decatur IL 62824
2241 East Bennett, Springfield MO 65804

www.gsrobins.com

GS ROBINS
Distribution Service Solutions

3000 Ellington Road, Quincy IL 62301
2955 Chrysler Road, Kansas City KS 66115
2214 N Fares Avenue, Evansville IN 47711

314-621-5155 FAX 314-621-1216

Customer Number
4442-05

17004330
MP

INVOICE

Date	Invoice #
07/08/2011	213495
Date Shipped	Order #
07/08/2011	199288

SOLD TO
American Water - KY - Owenton
PO Box 5626
Cherry Hill , NJ 08034-
USA

SHIP TO
American Water - KY - Owenton
220 Waterplant Rd
Owenton , KY 40359-
USA

$2461.32

Customer PO #	FOB Remark	Freight Terms
15153297		Prepaid and Allowed

Terms	Due Date	Ship Via	Sales ID	Division
Net 30 Days	08/07/2011	ADM	vgp	12

Units	Package	Product Name	Total Quantity	Unit Price	Amount
60.00	45.0 lb Bag	Carbon Activated Powdered, Aqua N 400000080-FB45 Lot No: HVNE27W001	2,700.0000/lb	0.8600 /lb	2,322.00
		Sales Tax @ 6.00%			139.32

10339055

Received
JUL 18 2011
Mailroom

Total Amount Due: 2,461.32

Remit To:
GS Robins and Co
Dept Number 26543
PO Box 790100
St Louis MO 63179-0100

126 Chouteau Avenue, St Louis MO 63102
2627 Route 121 NW, Decatur IL 62824
2241 East Bennett, Springfield MO 65804

www.gsrobins.com

GS ROBINS
Distribution Service Solutions

3000 Ellington Road, Quincy IL 62301
2955 Chrysler Road, Kansas City KS 66115
2214 N Fares Avenue, Evansville IN 47711

314-621-5155 FAX 314-621-1216

Customer Number
4442-05

17004330
SX 139.32

INVOICE

Date	Invoice #
06/21/2011	212406
Date Shipped	Order #
06/21/2011	198085

SOLD TO
American Water - KY - Owenton
PO Box 5626
Cherry Hill , NJ 08034-
USA

SHIP TO
American Water - KY - Owenton
220 Waterplant Rd
Owenton , KY 40359-
USA

Customer PO #	FOB Remark	Freight Terms
15153297		Prepaid and Allowed

Terms	Due Date	Ship Via	Sales ID	Division
Net 30 Days	07/21/2011	ADM	vgp	12

Units	Package	Product Name	Total Quantity	Unit Price	Amount
60.00	45.0 lb Bag	Carbon Activated Powdered, Aqua 400000080-FB45 Lot No: HVNE27W001	2,700.0000/lb	0.8600 /lb	2,322.00

Sales Tax @ 6.00% SX 139.32

10337316 OV

RECEIVED
JUN 30 2011
SSC-MAILROOM

Total Amount Due: 2,461.32

Remit To:
GS Robins and Co
Dept Number 26543
PO Box 790100
St Louis MO 63179-0100

126 Chouteau Avenue, St. Louis MO 63102
2627 Route 121 NW, Decatur IL 62824
2241 East Bennett, Springfield MO 65804
www.gsrobins.com

GS ROBINS
Distribution Service Solutions

3000 Ellington Road, Quincy IL 62301
2955 Chrysler Road, Kansas City KS 66115
2214 N Fares Avenue, Evansville IN 47711

314-621-5155 FAX 314-621-1216

Customer Number
4442-05

136 Oc omni-chem

17004330
SX 139.32 LQ

INVOICE

Date	Invoice #
05/31/2011	210921
Date Shipped	**Order #**
05/31/2011	197019

SOLD TO
American Water - KY - Owenton
PO Box 5626
Cherry Hill , NJ 08034-
USA

SHIP TO
American Water - KY - Owenton
220 Waterplant Rd
Owenton , KY 40359-
USA

Customer PO #	FOB Remark	Freight Terms
15153297	Destination	Prepaid and Allowed

Terms	Due Date	Ship Via	Sales ID	Division
Net 30 Days	06/30/2011	ADM	vgp	12

Units	Package	Product Name	Total Quantity	Unit Price	Amount
60.00	45.0 lb Bag	Carbon Activated Powdered, Aqua N 400000080-FB45 Lot No: HVNC23W001	2,700.0000/lb	0.8600 /lb	2,322.00

Sales Tax @ 6.00% SX 139.32

10335821 OV

RECEIVED
JUN - 9 2011
SSC-MAILROOM

Total Amount Due: 2,461.32

Remit To:
GS Robins and Co
Dept Number 26543
PO Box 790100
St Louis MO 63179-0100

126 Chouteau Avenue, St. Louis MO 63102
2627 Route 121 NW, Decatur IL 62824
2241 East Bennett, Springfield MO 65804

www.gsrobins.com

GS ROBINS
Distribution Service Solutions

3000 Ellington Road, Quincy IL 62301
2955 Chrysler Road, Kansas City KS 66115
2214 N Fares Avenue, Evansville IN 47711

314-621-5155 FAX 314-621-1216

Customer Number
4442-05

136 Oc omni-chem

17004336
SX 139.32 DR

INVOICE

Date	Invoice #
05/12/2011	209686
Date Shipped	**Order #**
05/12/2011	195962

SOLD TO
American Water - KY - Owenton
PO Box 5626
Cherry Hill , NJ 08034-
USA

SHIP TO
American Water - KY - Owenton
220 Waterplant Rd
Owenton , KY 40359-
USA

Customer PO #	FOB Remark	Freight Terms
15153297		Prepaid and Allowed

Terms	Due Date	Ship Via	Sales ID	Division
Net 30 Days	06/11/2011	ADM	vgp	12

Units	Package	Product Name	Total Quantity	Unit Price	Amount
60.00	45.0 lb Bag	Carbon Activated Powdered, Aqua N 400000080-FB45 Lot No: HVNB07W005	2,700.0000/lb	0.8600 /lb	2,322.00

Sales Tax @ 6.00% SX 139.32

10333233 OV

RECEIVED
JUN - 1 2011
SSC-MAILROOM

Total Amount Due: 2,461.32

Remit To:
GS Robins and Co
Dept Number 26543
PO Box 790100
St Louis MO 63179-0100

126 Chouteau Avenue, St. Louis MO 63102
2627 Route 121 NW, Decatur IL 62824
2241 East Bennett, Springfield MO 65804

www.gsrobins.com

GS ROBINS
Distribution Service Solutions

3000 Ellington Road, Quincy IL 62301
2955 Chrysler Road, Kansas City KS 66115
2214 N Fares Avenue, Evansville IN 47711

314-621-5155 FAX 314-621-1216

Customer Number
4442-05

136 Oc omni-chem

17004330
SX 69.66

NACD VERIFIED RESPONSIBLE DISTRIBUTION

INVOICE

Date	Invoice #
04/26/2011	208481
Date Shipped	Order #
04/26/2011	194578

SOLD TO
American Water - KY - Owenton
PO Box 5626
Cherry Hill , NJ 08034-
USA

SHIP TO
American Water - KY - Owenton
220 Waterplant Rd
Owenton , KY 40359-
USA

A12Supv05

Customer PO #	FOB Remark	Freight Terms
15153297		Prepaid and Allowed

Terms	Due Date	Ship Via	Sales ID	Division
Net 30 Days	05/26/2011	ADM	vgp	12

Units	Package	Product Name	Total Quantity	Unit Price	Amount
30.00	45.0 lb Bag	Carbon Activated Powdered, Aqua I 400000080-FB45 Lot No: HVNB07W005	1,350.0000/lb	0.8600 /lb	1,161.00
		Sales Tax @ 6.00%			SX 69.66

NEED REC Doc #

Received
MAY - 2 2011
SSC-Mailroom

Total Amount Due: 1,230.66

Remit To:
GS Robins and Co
Dept Number 26543
PO Box 790100
St Louis MO 63179-0100

126 Chouteau Avenue, St. Louis MO 63102
2627 Route 121 NW, Decatur IL 62824
2241 East Bennett, Springfield MO 65804

www.gsrobins.com

GS ROBINS
Distribution Service Solutions

3000 Ellington Road, Quincy IL 62301
2955 Chrysler Road, Kansas City KS 66115
2214 N Fares Avenue, Evansville IN 47711

314-621-5155 FAX 314-621-1216

Customer Number
4442-05

136 Oc omni-chem

INVOICE

Date	Invoice #
04/07/2011	207108
Date Shipped	Order #
04/07/2011	193323

17004330
SX 69.66

SOLD TO
American Water - KY - Owenton
PO Box 5626
Cherry Hill , NJ 08034-
USA

SHIP TO
American Water - KY - Owenton
220 Waterplant Rd
Owenton , KY 40359-
USA

Customer PO #	FOB Remark	Freight Terms
15153297		Prepaid and Allowed

Terms	Due Date	Ship Via	Sales ID	Division
Net 30 Days	05/07/2011	ADM	vgp	12

Units	Package	Product Name	Total Quantity	Unit Price	Amount
30.00	45.0 lb Bag	Carbon Activated Powdered, Aqua N 400000080-FB45 Lot No: HVNB07W005	1,350.0000/lb	0.8600 /lb	1,161.00
		Sales Tax @ 6.00%			SX -69.66

10330191 OV

RECEIVED
APR 18 2011
SSC-MAILROOM

Total Amount Due: 1,230.66

Remit To:
GS Robins and Co
Dept Number 26543
PO Box 790100
St Louis MO 63179-0100

126 Chouteau Avenue, St. Louis MO 63102
2627 Route 121 NW, Decatur IL 62824
2241 East Bennett, Springfield MO 65804

GS ROBINS
Distribution Service Solutions

3000 Ellington Road, Quincy IL 62301
2955 Chrysler Road, Kansas City KS 66115
2214 N Fares Avenue, Evansville IN 47711

www.gsrobins.com

314-621-5155 FAX 314-621-1216

INVOICE

Customer Number
4442-05

136 Oc omni-chem

17004336
SX 69.66

Date	Invoice #
03/31/2011	206528
Date Shipped	**Order #**
03/31/2011	192841

SOLD TO
American Water - KY - Owenton
PO Box 5626
Cherry Hill , NJ 08034-
USA

SHIP TO
American Water - KY - Owenton
220 Waterplant Rd
Owenton , KY 40359-
USA

Customer PO #	FOB Remark	Freight Terms
15153297		Prepaid and Allowed

Terms	Due Date	Ship Via	Sales ID	Division
Net 30 Days	04/30/2011	ADM	vgp	12

Units	Package	Product Name	Total Quantity	Unit Price	Amount
30.00	45.0 lb Bag	Carbon Activated Powdered, Aqua f 400000080-FB45 Lot No: HVNB07W005	1,350.0000/lb	0.8600 /lb	1,161.00

Sales Tax @ 6.00% SX 69.66

10329577 OV

RECEIVED
APR - 4 2011
SSC-MAILROOM

Total Amount Due: 1,230.66

Remit To:
GS Robins and Co
Dept Number 26543
PO Box 790100
St Louis MO 63179-0100

126 Chouteau Avenue, St. Louis MO 63102
2627 Route 121 NW, Decatur IL 62824
2241 East Bennett, Springfield MO 65804

www.gsrobins.com

GS ROBINS
Distribution Service Solutions

3000 Ellington Road, Quincy IL 62301
2955 Chrysler Road, Kansas City KS 66115
2214 N Fares Avenue, Evansville IN 47711

314-621-5155 FAX 314-621-1216

Customer Number
4442-05

136 Oc omni-chem

17004330
GX 69.66

INVOICE

Date	Invoice #
03/21/2011	205671
Date Shipped	**Order #**
03/21/2011	192097

SOLD TO
American Water - KY - Owenton
PO Box 5626
Cherry Hill , NJ 08034-
USA

SHIP TO
American Water - KY - Owenton
220 Waterplant Rd
Owenton , KY 40359-
USA

Customer PO #	FOB Remark	Freight Terms
15153297		Prepaid and Allowed

Terms	Due Date	Ship Via	Sales ID	Division
Net 30 Days	04/20/2011	ADM	vgp	12

Units	Package	Product Name	Total Quantity	Unit Price	Amount
30.00	45.0 lb Bag	Carbon Activated Powdered, Aqua N 400000080-FB45 Lot No: HVNB07W005	1,350.0000/lb	0.8600 /lb	1,161.00

Sales Tax @ 6.00% GX 69.66

10328918 OV

RECEIVED
MAR 28 2011
SSC-MAILROOM

Total Amount Due: 1,230.66

Remit To:
GS Robins and Co
Dept Number 26543
PO Box 790100
St Louis MO 63179-0100

126 Chouteau Avenue, St. Louis MO 63102
2627 Route 121 NW, Decatur IL 62824
2241 East Bennett, Springfield MO 65804

GS ROBINS
Distribution Service Solutions

3000 Ellington Road, Quincy IL 62301
2955 Chrysler Road, Kansas City KS 66115
2214 N Fares Avenue, Evansville IN 47711

www.gsrobins.com

314-621-5155 FAX 314-621-1216

Customer Number
4442-05

136 Oc omni-chem

17004330
SX 69.66 AP

INVOICE

Date	Invoice #
03/07/2011	204698
Date Shipped	Order #
03/07/2011	191067

SOLD TO
American Water - KY - Owenton
PO Box 5626
Cherry Hill , NJ 08034-
USA

SHIP TO
American Water - KY - Owenton
220 Waterplant Rd
Owenton , KY 40359-
USA

Customer PO #	FOB Remark	Freight Terms
15153297		Prepaid and Allowed

Terms	Due Date	Ship Via	Sales ID	Division
Net 30 Days	04/06/2011	ADM	vgp	12

Units	Package	Product Name	Total Quantity	Unit Price	Amount
30.00	45.0 lb Bag	Carbon Activated Powdered, Aqua N 400000080-FB45 Lot No: HVNB07W005	1,350.0000/lb	0.8600 /lb	1,161.00
		Sales Tax @ 6.00%			SX 69.66

1032 7199 OV

Received
MAR 21 2011
SSC-Mailroom

Total Amount Due: 1,230.66

Remit-To:
GS Robins and Co
Dept Number 26543
PO Box 790100
St Louis MO 63179-0100

126 Chouteau Avenue, St. Louis MO 63102
2627 Route 121 NW, Decatur IL 62824
2241 East Bennett, Springfield MO 65804

GS ROBINS
Distribution Service Solutions

3000 Ellington Road, Quincy IL 62301
2955 Chrysler Road, Kansas City KS 66115
2214 N Fares Avenue, Evansville IN 47711

www.gsrobins.com

314-621-5155 FAX 314-621-1216

17004330 mp

Customer Number
4442-05

136 Oc omni-chem

RECEIVED
MAR 07 2011

SSC-MAILROOM

NACD Responsible Distribution Process

INVOICE

Date	Invoice #
02/15/2011	203300
Date Shipped	Order #
02/15/2011	189422

SOLD TO
American Water - KY - Owenton
PO Box 5626
Cherry Hill , NJ 08034-
USA

SHIP TO
American Water - KY - Owenton
220 Waterplant Rd
Owenton , KY 40359-
USA

DOC 103259448

Customer PO #	FOB Remark	Freight Terms
15153297		Prepaid and Allowed

Terms	Due Date	Ship Via	Sales ID	Division
Net 30 Days	03/17/2011	ADM	vgp	12

Units	Package	Product Name	Total Quantity	Unit Price	Amount
20.00	45.0 lb Bag	Carbon Activated Powdered, Aqua N 400000080-FB45 Lot No: HVML23W001	900.0000/lb	0.8600 /lb	774.00
10.00	45.0 lb Bag	Carbon Activated Powdered, Aqua N 400000080-FB45 Lot No: HVNB07W005	450.0000/lb	0.8600 /lb	387.00
		Sales Tax @ 6.00%			69.66

Total Amount Due: 1,230.66

Remit To:
GS Robins and Co
Dept Number 26543
PO Box 790100
St Louis MO 63179-0100

126 Chouteau Avenue, St. Louis MO 63102
2627 Route 121 NW, Decatur IL 62824
2241 East Bennett, Springfield MO 65804

GS ROBINS
Distribution Service Solutions

3000 Ellington Road, Quincy IL 62301
2955 Chrysler Road, Kansas City KS 66115
2214 N Fares Avenue, Evansville IN 47711

www.gsrobins.com
314-621-5155 FAX 314-621-1216

17004330
mp

Customer Number
4442-05

136
Oc
omni-chem

SSC-MAILROOM
MAR 07 2011
RECEIVED

NACD Responsible Distribution Process

INVOICE

Date	Invoice #
02/07/2011	202534
Date Shipped	Order #
02/07/2011	188928

SOLD TO
American Water - KY - Owenton
PO Box 5626
Cherry Hill , NJ 08034-
USA

SHIP TO
American Water - KY - Owenton
220 Waterplant Rd
Owenton , KY 40359-
USA

DOC 10325107

Customer PO #	FOB Remark	Freight Terms
15153297		Prepaid and Allowed

Terms	Due Date	Ship Via	Sales ID	Division
Net 30 Days	03/09/2011	ADM	vgp	12

Units	Package	Product Name	Total Quantity	Unit Price	Amount
30.00	45.0 lb Bag	Carbon Activated Powdered, Aqua I 400000080-FB45 Lot No: HVML23W001	1,350.0000/lb	0.8600 /lb	1,161.00
		Sales Tax @ 6.00%			69.66

Total Amount Due: 1,230.66

Remit To:
GS Robins and Co
Dept Number 26543
PO Box 790100
St Louis MO 63179-0100

126 Chouteau Avenue, St. Louis MO 63102
2627 Route 121 NW, Decatur IL 62824
2241 East Bennett, Springfield MO 65804

www.gsrobins.com

GS ROBINS
Distribution Service Solutions

3000 Ellington Road, Quincy IL 62301
2955 Chrysler Road, Kansas City KS 66115
2214 N Fares Avenue, Evansville IN 47711

314-621-5155 FAX 314-621-1216

* Co 12

Customer Number
4442-05

136 Oc omni-chem

V# 17004330
omw

NACD Responsible Distribution Process

INVOICE

Date	Invoice #
01/17/2011	201066
Date Shipped	Order #
01/17/2011	187613

SOLD TO
American Water - KY - Owenton
PO Box 5626
Cherry Hill , NJ 08034-
USA

SHIP TO
American Water - KY - Owenton
220 Waterplant Rd
Owenton , KY 40359-
USA

TAX $69.66

Rec Doc # 10323629 - SX Total $1,230.66

Customer PO #	FOB Remark	Freight Terms
15153297		Prepaid and Allowed

Terms	Due Date	Ship Via	Sales ID	Division
Net 30 Days	02/16/2011	ADM	vgp	12

Units	Package	Product Name	Total Quantity	Unit Price	Amount
30.00	45.0 lb Bag	Carbon Activated Powdered, Aqua N 400000080-FB45 Lot No: HVMJ06W001	1,350.0000/lb	0.8600 /lb	1,161.00

Sales Tax @ 6.00% 69.66

RECEIVED
FEB 7 2011
SSC-MAILROOM

Total Amount Due: 1,230.66

Remit To:
GS Robins and Co
Dept Number 26543
PO Box 790100
St Louis MO 63179-0100

UNIVAR

PO BOX 34325
SEATTLE WA 98124-1325

www.univarusa.com

ORIGINAL INVOICE

UNIVAR CINCINNATI
4600 DUES DRIVE
CINCINNATI OH 45246
513-714-5264

Page 1 OF 1

1701O165 SX

2 1 138 1 MB 0 326 87747S11 XRX
590994
KENTUCKY AMERICAN WATER
PO BOX 5610
CHERRY HILL NJ 08034-0510

CUST NO /SHIP TO

590994 001
OWENTON WATER PLANT
220 WATER PLANT LANE
OWENTON KY 40359

A12SVPV05

CI874102 11/29/06

INVOICE NO	INV DATE	ORDER NO	CUSTOMER P.O. NUMBER	FREIGHT TERMS	FOB
CI 874102	11/29/06	595173	15078975	PREPAID (HDR FRT	DELIVERED
SHIP DATE	TAX EXEMPT NO	SALES REP	WAREHOUSE LOCATION	ON TIME DELIVERY	
11/29/06		CHARLIE MILLER	C NC INATI	JNIVAR USA C	
			SALES DEPARTMENT	ENTERED BY	
			INDUSTRIAL CHEMICAL	SHELLEY STEVENS	

PRODUCT DESCRIPTION	TAX	QUANTITY ORDERED	QUANTITY SHIPPED B O	BILLING QTY/ UNIT PRICE	EXTENDED AMOUNT
749200 CAUSTIC SODA 30% 591 LB DR UNIVAR NSFDIAPH SOLN EPOLY DR LOT # CI116876270	Y	12 00 DR	12 00 DR	7092 00 0 1400 LB	992 88
644207 UNIVAR PACKAGE DELIVERY 1 EA EA CHARGE SPCL CHG **** **** NA	Y	1 00 EA	1 00 EA	1.00 0 0000 EA	0 00
**********					
* RECENT RISING FUEL COSTS HAVE MADE IT NECESSARY FOR *					
* US TO ADD A TEMPORARY FUEL SURCHARGE TO *					
* EACH DELIVERY THIS ISEFFECTIVE MARCH 1, 2000 WE *					
* WILL CONTINUE TO MONITOR THE SITUATION AND ADJUST AS *					
* CIRCUMSTANCES DICTATE WE APPRECIATE YOUR *					
* UNDERSTANDING AND VALUEYOUR BUSINESS *					
**********					
				12-04-06 IN 0029	
10175714 CV QUANTITY ISSUE (Rec'd 7572#)					
TERMS NET 30				MERCHANDISE SALES TAX INVOICE TOTAL	992 88 59 57 1052 45

Buyer agrees that all orders or purchases are subject to Univar's Standard Terms and Conditions of Sale as of the date of shipment available at www.univarusa.com/salesterms. All sales and orders are expressly limited to such terms which may be updated from time to time. No other terms and conditions apply to any purchase or order unless agreed to in writing by both parties.

PLEASE DETACH HERE AND RETURN BOTTOM PORTION WITH YOUR PAYMENT

UNIVAR

CUST NO /SHIP TO

INVOICE NO	INVOICE DATE	AMOUNT DUE	AMOUNT PAID
CI-874102	11/29/06	1052 45	

590994
KENTUCKY AMERICAN WATER
PO BOX 5610
CHERRY HILL NJ 08034-0510

REMIT TO

UNIVAR USA INC
13009 COLLECTIONS CTR DR
CHICAGO IL 60693

PLEASE USE REVERSE SIDE FOR DETAILING DEDUCTIONS OR PAYMENT DISCREPANCIES

VMASTMT

UNIVAR

P O BOX 34325
SEATTLE WA 98124-1325

www univarusa com

ORIGINAL INVOICE

UNIVAR CINCINNATI
4600 DUES DRIVE
CINCINNATI OH 45246
513-714-5264

Page 1 OF 1

17010165
SX

12-20

7

CUST NO /SHIP TO

590994 001
OWENTON WATER PLANT
220 WATER PLANT LANE
OWENTON KY 40359

2 1 120 1 MB 0 326 88981S11 XRX
590994
KENTUCKY AMERICAN WATER
PO BOX 5610
CHERRY HILL NJ 08034-0510

CI877206 12/20/06

INVOICE NO	INV DATE	ORDER NO	CUSTOMER PO NUMBER	FREIGHT TERMS	FOB
CI 877206	12/20/06	598906	15078975 15078975	PREPAID (HDR FRT	DELIVERED
				WAREHOUSE LOCATION: CINCINNATI	ON TIME DELIVERY: UNIVAR USA INC
SHIP DATE: 12/20/06	TAX EXEMPT NO	SALES REP: CHARLIE MILLER		SALES DEPARTMENT: INDUSTRIAL CHEMICAL	ENTERED BY: LARA HAMILTON

PRODUCT DESCRIPTION	TAX	QUANTITY ORDERED	QUANTITY SHIPPED B O	BILLING QTY/ UNIT PRICE	EXTENDED AMOUNT
749200 CAUSTIC SODA 30% 591 LB DR UNIVAR NSFDIAPH SOLN EPOLY DR LOT # CI116876271	Y	14 00 DR	14 00 DR	8274 00 0.1400 LB	1158 36
644207 UNIVAR PACKAGE DELIVERY 1 EA EA CHARGE SPCL CHG **** **** NA	Y	1 00 EA	1 00 EA	1.00 0 0000 EA	0 00

****
* RECENT RISING FUEL COSTS HAVE MADE IT NECESSARY FOR *
* US TO ADD A TEMPORARY FUEL SURCHARGE TO *
* EACH DELIVERY THIS ISEFFECTIVE MARCH 1, 2000 WE *
* WILL CONTINUE TO MONITOR THE SITUATION AND ADJUST AS *
* CIRCUMSTANCES DICTATE WE APPRECIATE YOUR *
* UNDERSTANDING AND VALUEYOUR BUSINESS *
****

10177505 OV

MERCHANDISE	1158 36
SALES TAX	69 50
INVOICE TOTAL	1227 86

TERMS NET 30

Buyer agrees that all orders or purchases a e subject to Univar's Standard Terms and Cond tions of Sale s of the date of shipment a ailable at www univarusa com/salesterms All sales and orders ar expressly limited to such terms which may be updated from time to time No other te ms and conditions apply to any purch se or o der unless agreed to in writing by both parties

PLEASE DETACH HERE AND RETURN BOTTOM PORTION WITH YOUR PAYMENT

UNIVAR

CUST NO./SHIP TO

INVOICE NO	INVOICE DATE	AMOUNT DUE	AMOUNT PAID
CI-877206	12/20/06	1227 86	

590994
KENTUCKY AMERICAN WATER
PO BOX 5610
CHERRY HILL NJ 08034-0510

REMIT TO

UNIVAR USA INC
13009 COLLECTIONS CTR DR
CHICAGO IL 60693

PLEASE USE REVERSE SIDE FOR DETAILING DEDUCTIONS OR PAYMENT DISCREPANCIES

UNIVAR

PO BOX 34325
SEATTLE WA 98124-1325

www.univarusa.com

ORIGINAL INVOICE

UNIVAR CINCINNATI
4600 DUES DRIVE
CINCINNATI OH 45246
513-714-5264

16-07 RCV 0031

Page 1 OF 1

17010165
SX

CUST NO /SHIP TO

590994 001
OWENTON WATER PLANT
220 WATER PLANT LANE
OWENTON KY 40359

2 1 148 1 MB 0 326 90348S11 XRX
590994
KENTUCKY AMERICAN WATER
PO BOX 5610
CHERRY HILL NJ 08034-0510

CI879603 1/10/07

INVOICE NO	INV DATE	ORDER NO	CUSTOMER P.O. NUMBER	FREIGHT TERMS	FOB
CI 879603	01/10/07	600461	15078975 15078975	PREPAID (HDR FRT	DELIVERED
SHIP DATE	TAX EXEMPT NO	SALES REP		WAREHOUSE LOCATION	ON TIME DELIVERY
01/10/07		CHARLIE MILLER		CINCINNATI	UNIVAR USA INC
				SALE DEPARTMENT	ENTERED BY
				INDUSTRIAL CHEMICAL	SANDE ADCOCK

PRODUCT DESCRIPTION	TAX	QUANTITY ORDERED	QUANTITY SHIPPED B O	BILLING QTY/ UNIT PRICE	EXTENDED AMOUNT
749200 CAUSTIC SODA 30% 591 LB DR UNIVAR NSFDIAPH SOLN EPOLY DR LOT # CI126876272	Y	10 00 DR	10 00 DR	5910 00 0 1400 LB	827 40
644207 UNIVAR PACKAGE DELIVERY 1 EA EA CHARGE SPCL CHG **** **** NA	Y	1 00 EA	1 00 EA	1 00 0 0000 EA	0 00

****
* RECENT RISING FUEL COSTS HAVE MADE IT NECESSARY FOR *
* US TO ADD A TEMPORARY FUEL SURCHARGE TO *
* EACH DELIVERY THIS ISEFFECTIVE MARCH 1, 2000 WE *
* WILL CONTINUE TO MONITOR THE SITUATION AND ADJUST AS *
* CIRCUMSTANCES DICTATE WE APPRECIATE YOUR *
* UNDERSTANDING AND VALUEYOUR BUSINESS *
****

10179546 OV

MERCHANDISE	827 40
SALES TAX	49 64
INVOICE TOTAL	877 04

TERMS NET 30

Buyer agrees that all orders or purchases are subject to Univar's Standard Terms and Conditions of Sale as of the date of shipment available at www.univarusa.com/salesterms. All sales and orders are expressly limited to such terms which may be [illegible] unless agreed to in writing by both parties.

PLEASE DETACH HERE AND RETURN BOTTOM PORTION WITH YOUR PAYMENT

UNIVAR

CUST NO /SHIP TO

INVOICE NO	INVOICE DATE	AMOUNT DUE	AMOUNT PAID
CI-879603	01/10/07	877 04	

590994
KENTUCKY AMERICAN WATER
PO BOX 5610
CHERRY HILL NJ 08034-0510

REMIT TO

UNIVAR USA INC
13009 COLLECTIONS CTR DR
CHICAGO IL 60693

PLEASE USE REVERSE SIDE FOR DETAILING DEDUCTIONS OR PAYMENT DISCREPANCIES

UNIVAR

P O BOX 34325
SEATTLE WA 98124 1325

www univarusa com

ORIGINAL INVOICE

UNIVAR CINCINNATI
4600 DUES DRIVE
CINCINNATI OH 45246
513-714-5264

Page 1 OF 1

590994
KENTUCKY AMERICAN WATER
PO BOX 5600
CHERRY HILL NJ 08034-0590

17010165 SX

CUST NO /SHIP TO

590994 001
OWENTON WATER PLANT
220 WATER PLANT LANE
OWENTON KY 40359

CI856789 8/9/06

INVOICE NO	INV DATE	ORDER NO	CUSTOMER PO NUMBER
CI 856789	08/09/06	577427	15078969

15078969

SHIP DATE	PAYMENT NO	SALES REP
08/09/06		CHARLIE MILLER

FREIGHT TERMS	FOB
PREPAID (HDR FRT	DELIVERED
WAREHOUSE LOCATION	SO TIME DELIVERY
CINCINNATI	UNIVAR USA INC
SALES DEPARTMENT	ENTERED BY
INDUSTRIAL CHEMICAL	SHELLEY STEVENS

PRODUCT DESCRIPTION	TAX	QUANTITY ORDERED	QUANTITY SHIPPED B O	PRICE QTY UNIT PRICE	EXTENDED AMOUNT
749200 CAUSTIC SODA 30% 591 LB DR UNIVAR NSFDIAPH SOLN EPOLY DR LOT # CI076872782	Y	6 00 DR	6 00 DR	3546 00 0 1400 LB	496 44
644207 UNIVAR PACKAGE DELIVERY 1 EA EA CHARGE SPCL CHG **** **** NA	Y	1 00 EA	1 00 EA	1 00 0 0000 EA	0 00

****
* RECENT RISING FUEL COSTS HAVE MADE IT NECESSARY FOR *
* US TO ADD A TEMPORARY FUEL SURCHARGE TO *
* EACH DELIVERY THIS ISEFFECTIVE MARCH 1, 2000 WE *
* WILL CONTINUE TO MONITOR THE SITUATION AND ADJUST AS *
* CIRCUMSTANCES DICTATE WE APPRECIATE YOUR *
* UNDERSTANDING AND VALUEYOUR BUSINESS *
****

Received
AUG 14 2006
Sharod Services Center

10163653 OV
UNIT PRICE PROBLEM

TERMS NET 30

MERCHANDISE	496 44
SALES TAX	29 79
INVOICE TOTAL	526 23

Buyer agrees that all orders or purchases are subject to Univar's Standard Terms and Conditions of Sale as of the date of shipment available at www univarusa com/salesterms Allsales and orders are expressly limited to such terms which may be updated from time to time No other terms and conditions apply to any purchase or order unless agreed to in writing by both parties

PLEASE DETACH HERE AND RETURN BOTTOM PORTION WITH YOUR PAYMENT

UNIVAR

CUST NO /SHIP TO

INVOICE NO	INVOICE DATE	AMOUNT DUE	AMOUNT PAID
CI 856789	08/09/06	526 23	

590994
KENTUCKY AMERICAN WATER
PO BOX 5600
CHERRY HILL NJ 08034-0590

REMIT TO

UNIVAR USA INC
13009 COLLECTIONS CTR DR
CHICAGO IL 60693

PLEASE USE REVERSE SIDE FOR DETAILING DEDUCTIONS OR PAYMENT DISCREPANCIES

2 1 162 1 MB 0 326 80996S11 XRX

UNIVAR

P O BOX 34325
SEATTLE WA 98124-1325

www univarusa com

ORIGINAL INVOICE

UNIVAR CINCINNATI
4600 DUES DRIVE
CINCINNATI OH 45246
513-714-5264

Page 1 OF 1

17010165 SX

590994
KENTUCKY AMERICAN WATER
PO BOX 5610
CHERRY HILL NJ 08034-0510

CUST NO /SHIP TO

590994 001
OWENTON WATER PLANT
220 WATER PLANT LANE
OWENTON KY 40359

CI867271 10/11/06

INVOICE NO	INV DATE	ORDER NO	CUSTOMER P.O. NUMBER	FREIGHT TERMS	FOB
CI 867271	10/11/06	588105	15078969 15078969	PREPAID (HDR FRT	DELIVERED
				WAREHOUSE LOCATION: CINCINNATI	ON TIME DELIVERY: UNIVAR USA INC
SHIP DATE: 10/11/06	TAX EXEMPT NO	SALES REP: CHARLIE MILLER		SALES DEPARTMENT: INDUSTRIAL CHEMICAL	ENTERED BY: SHELLEY STEVENS

PRODUCT DESCRIPTION	TAX	QUANTITY ORDERED	QUANTITY SHIPPED B O	BILLING QTY/ UNIT PRICE	EXTENDED AMOUNT
701089 CAUSTIC SODA 50% 680 LB DR UNIVAR NSF SOLN EPOLY DR LOT # CI106875271 PO# 15078969	Y	8 00 DR	8 00 DR	5440 00 0 1800 LB	979 20
644207 UNIVAR PACKAGE DELIVERY 1 EA EA CHARGE SPCL CHG **** **** NA	Y	1 00 EA	1 00 EA	1 00 0 0000 EA	0 00

****
* RECENT RISING FUEL COSTS HAVE MADE IT NECESSARY FOR *
* US TO ADD A TEMPORARY FUEL SURCHARGE TO *
* EACH DELIVERY THIS ISEFFECTIVE MARCH 1, 2000 WE *
* WILL CONTINUE TO MONITOR THE SITUATION AND ADJUST AS *
* CIRCUMSTANCES DICTATE WE APPRECIATE YOUR *
* UNDERSTANDING AND VALUEYOUR BUSINESS. *
****

10170046 OV

MERCHANDISE	979 20
SALES TAX	58 75
INVOICE TOTAL	1037 95

TERMS NET 30

Buyer agrees that all orders or purchases are subject to Univar's Standard Terms and Co d tions of Sale s of the date of shipment available at www univarusa com/salesterms All sales and orders e xp s ly l mited to uch terms wl ich m y b pd led i tr ex time No ob r terms and conditions apply to any purchase or orde unless agreed to l writing by both parties

PLEASE DETACH HERE AND RETURN BOTTOM PORTION WITH YOUR PAYMENT

UNIVAR

CUST NO /SHIP TO

INVOICE NO	INVOICE DATE	AMOUNT DUE	AMOUNT PAID
CI-867271	10/11/06	1037 95	

Received
OCT 16 2006
Sas ed Services Center

590994
KENTUCKY AMERICAN WATER
PO BOX 5610
CHERRY HILL NJ 08034-0510

REMIT TO

UNIVAR USA INC
13009 COLLECTIONS CTR DR
CHICAGO IL 60693

PLEASE USE REVERSE SIDE FOR DETAILING DEDUCTIONS OR PAYMENT DISCREPANCIES

2 1 119 1 MB 0 326 84824S11 XRX

UNIVAR

P O BOX 34325
SEATTLE WA 98124-1325

www univarusa com

ORIGINAL INVOICE

UNIVAR CINCINNATI
4600 DUES DRIVE
CINCINNATI OH 45246
513-714-5264

Page 1 OF 1

1701016S SX

Received
SEP 25 2006
Shared Services Center

2 1 132 1 MB 0 326 83196S11 XRx
590994
KENTUCKY AMERICAN WATER
PO BOX 5610
CHERRY HILL NJ 08034-0510

CUST NO /SHIP TO

590994 001
OWENTON WATER PLANT
220 WATER PLANT LANE
OWENTON KY 40359

CI863141 9/15/06

INVOICE NO	INV DATE	ORDER NO	CUSTOMER P O NUMBER	FREIGHT TERMS	FOB
CI 863141	09/15/06	584126	15078969 15078969	PREPAID (HDR FRT	DELIVERED
				WAREHOUSE LOCATION: CINCINNATI	ON TIME DELIVERY: UNIVAR USA INC
SHIP DATE: 09/15/06	TAX EXEMPT NO	SALES REP: CHARLIE MILLER		SALES DEPARTMENT: INDUSTRIAL CHEMICAL	ENTERED BY: SHELLEY STEVENS

PRODUCT DESCRIPTION	TAX	QUANTITY ORDERED	QUANTITY SHIPPED B O	BILLING QTY/ UNIT PRICE	EXTENDED AMOUNT
701089 CAUSTIC SODA 50% 680 LB DR 200 MG/L UNIVAR NSF SOLN EPOLY DR LOT # CI096873554 PO# 15078969	Y	5 00 DR	5 00 DR	3400 00 0 1800 LB	612 00
644207 UNIVAR PACKAGE DELIVERY 1 EA EA CHARGE SPCL CHG **** **** NA	Y	1 00 EA	1 00 EA	1 00 0 0000 EA	0 00

****
* RECENT RISING FUEL COSTS HAVE MADE IT NECESSARY FOR *
* US TO ADD A TEMPORARY FUEL SURCHARGE TO *
* EACH DELIVERY THIS ISEFFECTIVE MARCH 1, 2000 WE *
* WILL CONTINUE TO MONITOR THE SITUATION AND ADJUST AS *
* CIRCUMSTANCES DICTATE WE APPRECIATE YOUR *
* UNDERSTANDING AND VALUEYOUR BUSINESS. *
****

10167491 OV

TERMS NET 30

MERCHANDISE	612 00
SALES TAX	36 72
INVOICE TOTAL	648 72

Buyer agree that all orders or purchases are subject to Univar's Standard Terms and Conditions of Sale as of the date of shipment a ailable at www univarusa com/salesterms All sales and orders are expressly limited to such terms wh ch may be pdated from t me to time No other terms and conditions apply to any purchase or order unless ag eed to n writing by both parties

PLEASE DETACH HERE AND RETURN BOTTOM PORTION WITH YOUR PAYMENT

UNIVAR

CUST NO /SHIP TO

INVOICE NO	INVOICE DATE	AMOUNT DUE	AMOUNT PAID
CI 863141	09/15/06	648 72	

590994
KENTUCKY AMERICAN WATER
PO BOX 5610
CHERRY HILL NJ 08034-0510

REMIT TO

UNIVAR USA INC
13009 COLLECTIONS CTR DR
CHICAGO IL 60693

PLEASE USE REVERSE SIDE FOR DETAILING DEDUCTIONS OR PAYMENT DISCREPANCIES

YWBSTM1

UNIVAR

P O BOX 34325
SEATTLE WA 98124 1325

www univarusa com

ORIGINAL INVOICE

UNIVAR CINCINNATI
4600 DUES DRIVE
CINCINNATI OH 45246
513-714-5264

17010165

Received SX
AUG 30 2006

CUST NO /SHIP TO

2 1 110 1 MB 0 326 81930S11 XRX
590994
KENTUCKY AMERICAN WATER
PO BOX 5610
CHERRY HILL NJ 08034-0510

590994 001
OWENTON WATER PLANT
220 WATER PLANT LANE
OWENTON KY 40359

A12SUPY05

CI859691 8/25/06

INVOICE NO	INV DATE	ORDER NO	CUSTOMER PO NUMBER
CI 859691	08/25/06	580656	15078969

15078969

SHIP DATE	TAX EXEMPT NO	SALES REP
08/25/06		CHARLIE MILLER

FREIGHT TERMS	FOB
PREPAID (HDR FRT	DELIVERED
WAREHOUSE LOCATION	ON TIME DELIVERY
CINCINNATI	UNIVAR USA INC
SALES DEPARTMENT	ENTERED BY
INDUSTRIAL CHEMICAL	SHELLEY STEVENS

PRODUCT DESCRIPTION	TAX	QUANTITY ORDERED	QUANTITY SHIPPED B O	BILLING QTY/ UNIT PRICE	EXTENDED AMOUNT
701089 CAUSTIC SODA 50% 680 LB DR 200 MG/L UNIVAR NSF SOLN EPOLY DR LOT # CI086870958 PO# 15078969	Y	10 00 DR	10 00 DR	6800 00 0 1800 LB	1224 00
644207 UNIVAR PACKAGE DELIVERY 1 EA EA CHARGE SPCL CHG **** **** NA	Y	1 00 EA	1 00 EA	1 00 0 0000 EA	0 00
**********					
* RECENT RISING FUEL COSTS HAVE MADE IT NECESSARY FOR *					
* US TO ADD A TEMPORARY FUEL SURCHARGE TO *					
* EACH DELIVERY THIS ISEFFECTIVE MARCH 1, 2000 WE *					
* WILL CONTINUE TO MONITOR THE SITUATION AND ADJUST AS *					
* CIRCUMSTANCES DICTATE WE APPRECIATE YOUR *					
* UNDERSTANDING AND VALUEYOUR BUSINESS. *					
**********					

Need Rec Doc #

TERMS NET 30

MERCHANDISE	1224 00
SALES TAX	73 44
INVOICE TOTAL	1297 44

Buyer agrees that all orders or purchases are subject to Univar's Standard Terms and Conditions of Sale as of the date of shipment available at www.univarusa.com/salesterms All sales do not are expressly limited to such terms which may be updated from time to time No other terms and conditions apply to any purchase order unless agreed to in writing by both parties

PLEASE DETACH HERE AND RETURN BOTTOM PORTION WITH YOUR PAYMENT

UNIVAR

CUST NO /SHIP TO

INVOICE NO	INVOICE DATE	AMOUNT DUE	AMOUNT PAID
CI-859691	08/25/06	1297 44	

590994
KENTUCKY AMERICAN WATER
PO BOX 5610
CHERRY HILL NJ 08034-0510

REMIT TO

UNIVAR USA INC
13009 COLLECTIONS CTR DR
CHICAGO IL 60693

PLEASE USE REVERSE SIDE FOR DETAILING DEDUCTIONS OR PAYMENT DISCREPANCIES

VWRSTMT

UNIVAR

P O BOX 34325
SEATTLE WA 98124-1325

www univarusa com

ORIGINAL INVOICE

UNIVAR CINCINNATI
4600 DUES DRIVE
CINCINNATI OH 45246
513-714-5264

Page 1 OF 1

17010165
SX

CUST NO /SHIP TO

2 1 146 1 MB 0 326 79499S11 XRx
590994
KENTUCKY AMERICAN WATER
PO BOX 5600
CHERRY HILL NJ 08034-0590

590994 001
OWENTON WATER PLANT
220 WATER PLANT LANE
OWENTON KY 40359

CI852345 7/17/06

INVOICE NO	INV DATE	ORDER NO	CUSTOMER P.O. NUMBER	FREIGHT TERMS	FOB
CI 852345	07/17/06	572907	15078969 15078969	PREPAID (HDR FRT	DELIVERED
SHIP DATE	TAX EXEMPT NO	SALES REP		WAREHOUSE LOCATION	ON TIME DELIVERY
07/17/06		CHARLIE MILLER		CINCINNATI	UNIVAR USA INC
				SALES DEPARTMENT	ENTERED BY
				INDUSTRIAL CHEMICAL	SHELLEY STEVENS

PRODUCT DESCRIPTION	TAX	QUANTITY ORDERED	QUANTITY SHIPPED B O	BILLING QTY/ UNIT PRICE	EXTENDED AMOUNT
701089 CAUSTIC SODA 50% 680 LB DR 200 MG/L UNIVAR NSF SOLN EPOLY DR LOT # CI066870955 PO# 15078969	Y	10 00 DR	10 00 DR	6800 00 0 1800 LB	1224 00
644207 UNIVAR PACKAGE DELIVERY 1 EA EA CHARGE SPCL CHG **** **** NA	Y	1 00 EA	1 00 EA	1 00 0 0000 EA	0 00

****
* RECENT RISING FUEL COSTS HAVE MADE IT NECESSARY FOR *
* US TO ADD A TEMPORARY FUEL SURCHARGE TO *
* EACH DELIVERY THIS ISEFFECTIVE MARCH 1, 2000 WE *
* WILL CONTINUE TO MONITOR THE SITUATION AND ADJUST AS *
* CIRCUMSTANCES DICTATE WE APPRECIATE YOUR *
* UNDERSTANDING AND VALUEYOUR BUSINESS *
****

10160387 OV

Received
JUL 25 2006
Shared Services Center

TERMS NET 30

MERCHANDISE	1224 00
SALES TAX.	73 44
INVOICE TOTAL	1297 44

B v grees that ll d rs or pu chases are subject to Univar's Standard Terms and Conditions of Sale as f the date of shipment ava lable at www univarusa com/salesterm. All sales and orders e e p sly l m ted to such te ms wh ch may be pd ted fr m t me to tme No other te ms and conditions apply to any purchase or order less gre d to in w ting by both parties

PLEASE DETACH HERE AND RETURN BOTTOM PORTION WITH YOUR PAYMENT

UNIVAR

CUST NO /SHIP TO

INVOICE NO	INVOICE DATE	AMOUNT DUE	AMOUNT PAID
CI-852345	07/17/06	1297 44	

590994
KENTUCKY AMERICAN WATER
PO BOX 5600
CHERRY HILL NJ 08034-0590

REMIT TO

UNIVAR USA INC
13009 COLLECTIONS CTR DR
CHICAGO IL 60693

PLEASE USE REVERSE SIDE FOR DETAILING DEDUCTIONS OR PAYMENT DISCREPANCIES

UNIVAR

P O BOX 34325
SEATTLE WA 98124-1325

www univarusa com

ORIGINAL INVOICE

UNIVAR CINCINNATI
4600 DUES DRIVE
CINCINNATI OH 45246
513-714-5264

Page 1 OF 1

17010165 AD
SX

CUST NO /SHIP TO

2 1 148 1 MB 0 326 78002511 XRX
590994
KENTUCKY AMERICAN WATER
PO BOX 5600
CHERRY HILL NJ 08034-0590

590994 001
OWENTON WATER PLANT
220 WATER PLANT LANE
OWENTON KY 40359

A12SUPV05

CI848311 6/21/06

INVOICE NO	INV DATE	ORDER NO	CUSTOMER P.O. NUMBER	FREIGHT TERMS	FOB
CI 848311	06/21/06	568545	15078969 15078969	PREPAID (HDR FRT	DELIVERED
SHIP DATE	TAX EXEMPT NO		SALES REP	WAREHOUSE LOCATION	ON TIME DELIVERY
06/21/06			CHARLIE MILLER	CINCINNATI	UNIVAR USA INC
				SALES DEPARTMENT	ENTERED BY
				INDUSTRIAL CHEMICAL	SHELLEY STEVENS

PRODUCT DESCRIPTION	TAX	QUANTITY ORDERED	QUANTITY SHIPPED B O	BILLING QTY/ UNIT PRICE	EXTENDED AMOUNT
701089 CAUSTIC SODA 50% 680 LB DR 200 MG/L UNIVAR NSF SOLN EPOLY DR LOT # CI066870953 PO# 15078969	Y	8 00 DR	8 00 DR	5440 00 0 1800 LB	979 20
644207 UNIVAR PACKAGE DELIVERY 1 EA EA CHARGE SPCL CHG **** **** NA	Y	1 00 EA	1 00 EA	1 00 0 0000 EA	0 00

****
* RECENT RISING FUEL COSTS HAVE MADE IT NECESSARY FOR *
* US TO ADD A TEMPORARY FUEL SURCHARGE TO *
* EACH DELIVERY THIS ISEFFECTIVE MARCH 1, 2000 WE *
* WILL CONTINUE TO MONITOR THE SITUATION AND ADJUST AS *
* CIRCUMSTANCES DICTATE WE APPRECIATE YOUR *
* UNDERSTANDING AND VALUEYOUR BUSINESS. *
****

NEED REC DOC #

Received
JUN 26 2006
Shared Services Center

TERMS NET 30

MERCHANDISE	979 20
SALES TAX	58.75
INVOICE TOTAL	1037 95

Buyer agrees that all orders or purchases are subject to Univar's Standard Terms and Conditions of Sale as of the date of [illegible] available at [illegible] which may be updated from time to time. No other [illegible] conditions apply to any [illegible] orders [illegible] agreed to [illegible] by both parties [illegible] to such terms

PLEASE DETACH HERE AND RETURN BOTTOM PORTION WITH YOUR PAYMENT

UNIVAR
CUST NO /SHIP TO

INVOICE NO	VOICE DATE	AMOUNT DUE	AMOUNT PAID
CI-848311	06/21/06	1037 95	

590994
KENTUCKY AMERICAN WATER
PO BOX 5600
CHERRY HILL NJ 08034-0590

REMIT TO

UNIVAR USA INC
13009 COLLECTIONS CTR DR
CHICAGO IL 60693

PLEASE USE REVERSE SIDE FOR DETAILING DEDUCTIONS OR PAYMENT DISCREPANCIES

UNIVAR

P O BOX 34325
SEATTLE WA 98124-1325

www univarusa com

ORIGINAL INVOICE

UNIVAR CINCINNATI
4600 DUES DRIVE
CINCINNATI OH 45246
513-714-5264

17010165 RQ
SX

CUST NO /SHIP TO

2 1 121 1 MB 0 326 88677S11 XRX
590994
KENTUCKY AMERICAN WATER
PO BOX 5610
CHERRY HILL NJ 08034-0510

12-21-06 RCVD 0002

590994 001
OWENTON WATER PLANT
220 WATER PLANT LANE
OWENTON KY 40359

CI876286 12/13/06

INVOICE NO	INV DATE	ORDER NO	CUSTOMER P.O NUMBER	FREIGHT TERMS	FOB
CI-876286	12/13/06	597526	15078971 15078971	PREPAID (HDR FRT	DELIVERED
				WAREHOUSE LOCATION: CINCINNATI	ON TIME DELIVERY: UNIVAR USA INC
SHIP DATE: 12/13/06	TAX EXEMPT NO	SALES REP: CHARLIE MILLER		SALES DEPARTMENT: INDUSTRIAL CHEMICAL	ENTERED BY: SANDE ADCOCK

PRODUCT DESCRIPTION	TAX	QUANTITY ORDERED	QUANTITY SHIPPED B O	BILLING QTY/ UNIT PRICE	EXTENDED AMOUNT
240860 CHLORINE 150 LB CY UNIVAR NSF LQGAS CYLINDER PO# 15078971	Y	12 00 CY	12 00 CY	1800 00 0 4000 LB	720 00
333290 RETURNABLE 150# CHLORINE 1 EA EA CYLINDER UNIVAR UNIVR CT **** **** CYLINDER	Y	12 00 EA	12 00 EA	12.00 100 0000 EA	~~1200 00~~
644207 UNIVAR PACKAGE DELIVERY 1 EA EA CHARGE SPCL CHG **** **** NA	Y	1 00 EA	1 00 EA	1.00 0 0000 EA	0 00

****
* RECENT RISING FUEL COSTS HAVE MADE IT NECESSARY FOR *
* US TO ADD A TEMPORARY FUEL SURCHARGE TO *
* EACH DELIVERY THIS ISEFFECTIVE MARCH 1, 2000 WE *
* WILL CONTINUE TO MONITOR THE SITUATION AND ADJUST AS *
* CIRCUMSTANCES DICTATE WE APPRECIATE YOUR *
* UNDERSTANDING AND VALUEYOUR BUSINESS *
****

10176771 OV

INV TOTAL $1963 20

Buyer agrees that all orders or purchases are subject to Univar's Standard Terms and Conditions of Sale as of the date of shipment available at www univarusa com/salesterms All sales and orders are expressly limited to such terms which may be updated from time to time No other terms and conditions apply to any purchase or order unless agreed to in writing by both parties

PLEASE DETACH HERE AND RETURN BOTTOM PORTION WITH YOUR PAYMENT

UNIVAR

CUST NO./SHIP TO

INVOICE NO	INVOICE DATE	AMOUNT DUE	AMOUNT PAID
CI-876286	12/13/06	CONTINUED	

590994
KENTUCKY AMERICAN WATER
PO BOX 5610
CHERRY HILL NJ 08034-0510

REMIT TO

UNIVAR USA INC
13009 COLLECTIONS CTR DR
CHICAGO IL 60693

PLEASE USE REVERSE SIDE FOR DETAILING DEDUCTIONS OR PAYMENT DISCREPANCIES

UNIVAR

P O BOX 34325
SEATTLE WA 98124-1325

www univarusa com

ORIGINAL INVOICE

UNIVAR CINCINNATI
4600 DUES DRIVE
CINCINNATI OH 45246
513-714-5264

CUST NO /SHIP TO

590994
KENTUCKY AMERICAN WATER
PO BOX 5610
CHERRY HILL NJ 08034-0510

590994 001
OWENTON WATER PLANT
220 WATER PLANT LANE
OWENTON KY 40359

12-21-06 RCVD 0003

INVOICE NO	INV DATE	ORDER NO	CUSTOMER P O NUMBER	FREIGHT TERMS	FOB
CI-876286	12/13/06	597526	15078971	PREPAID (HDR FRT	DELIVERED

SHIP DATE	TAX EXEMPT NO	SALES REP	WAREHOUSE LOCATION	ON TIME DELIVERY
12/13/06		CHARLIE MILLER	CINCINNATI	UNIVAR USA INC

SALES DEPARTMENT	ENTERED BY
INDUSTRIAL CHEMICAL	SANDE ADCOCK

PRODUCT DESCRIPTION	TAX	QUANTITY ORDERED	QUANTITY SHIPPED B O	BILLING QTY/ UNIT PRICE	EXTENDED AMOUNT
			MERCHANDISE		720 00
			DEPOSIT		1200 00
			SALES TAX		43 20
TERMS NET 30			INVOICE TOTAL		1963 20

Buyer agrees that all orders or purchases are subject to Univar's Standard Terms and Cond tions of Sale as of the date of shipment a ailable at www univarusa com/salesterms All sales and orders are expressly limited to such terms which may be updated from time to time No other terms and conditions appy to any purchase or order unless agreed to in writing by both parties

PLEASE DETACH HERE AND RETURN BOTTOM PORTION WITH YOUR PAYMENT

UNIVAR

CUST NO /SHIP TO

INVOICE NO	INVOICE DATE	AMOUNT DUE	AMOUNT PAID
CI-876286	12/13/06	1963 20	

590994
KENTUCKY AMERICAN WATER
PO BOX 5610
CHERRY HILL NJ 08034-0510

REMIT TO

UNIVAR USA INC
13009 COLLECTIONS CTR DR
CHICAGO IL 60693

PLEASE USE REVERSE SIDE FOR DETAILING DEDUCTIONS OR PAYMENT DISCREPANCIES

2 1 121 1 MB 0 326 88677S11 XRX

VWRSTMT

UNIVAR

PO BOX 34325
SEATTLE WA 98124-1325

www univarusa com

ORIGINAL INVOICE

UNIVAR CINCINNATI
4600 DUES DRIVE
CINCINNATI OH 45246
513-714-5264

Page 1 OF 2

17010165 RR
SX

2 1 119 1 MB 0 326 84824S11 XRX
590994
KENTUCKY AMERICAN WATER
PO BOX 5610
CHERRY HILL NJ 08034-0510

Shared Services Center

CUST NO /SHIP TO

590994 001
OWENTON WATER PLANT
220 WATER PLANT LANE
OWENTON KY 40359

CI867270 10/11/06

INVOICE NO	INV DATE	ORDER NO	CUSTOMER P.O. NUMBER
CI 867270	10/11/06	588101	15078971 15078971

SHIP DATE	TAX EXEMPT NO	SALES REP
10/11/06		CHARLIE MILLER

FREIGHT TERMS	FOB
PREPAID (HDR FRT	DELIVERED
WAREHOUSE LOCATION	ON TIME DELIVERY
CINCINNATI	UNIVAR USA INC
SALES DEPARTMENT	ENTERED BY
INDUSTRIAL CHEMICAL	SHELLEY STEVENS

PRODUCT DESCRIPTION	TAX	QUANTITY ORDERED	QUANTITY SHIPPED B O	BILLING QTY/ UNIT PRICE	EXTENDED AMOUNT
240860 CHLORINE 150 LB CY UNIVAR NSF LQGAS CYLINDER PO# 15078971	Y	8 00 CY	8 00 CY	1200 00 0 4000 LB	480 00
333290 RETURNABLE 150# CHLORINE 1 EA EA CYLINDER UNIVAR UNIVR CT **** **** CYLINDER	Y	8 00 EA	8 00 EA	8.00 100 0000 EA	800 00
644207 UNIVAR PACKAGE DELIVERY 1 EA EA CHARGE SPCL CHG **** **** NA	Y	1 00 EA	1 00 EA	1.00 0 0000 EA	0 00

****
* RECENT RISING FUEL COSTS HAVE MADE IT NECESSARY FOR *
* US TO ADD A TEMPORARY FUEL SURCHARGE TO *
* EACH DELIVERY THIS ISEFFECTIVE MARCH 1, 2000 WE *
* WILL CONTINUE TO MONITOR THE SITUATION AND ADJUST AS *
* CIRCUMSTANCES DICTATE WE APPRECIATE YOUR *
* UNDERSTANDING AND VALUEYOUR BUSINESS *
****

INV Total $1308 80

10170244 OV

Buyer agrees that all orders or purchases are subject to Univar's Standard Terms and Conditions of Sale which may be updated from time to time No other terms and conditions apply to any purchase or order unless agreed to in writing by both parties

PLEASE DETACH HERE AND RETURN BOTTOM PORTION WITH YOUR PAYMENT

UNIVAR

CUST NO/SHIP TO

INVOICE NO	INVOICE DATE	AMOUNT DUE	AMOUNT PAID
CI-867270	10/11/06	CONTINUED	

590994
KENTUCKY AMERICAN WATER
PO BOX 5610
CHERRY HILL NJ 08034-0510

REMIT TO

UNIVAR USA INC
13009 COLLECTIONS CTR DR
CHICAGO IL 60693

PLEASE USE REVERSE SIDE FOR DETAILING DEDUCTIONS OR PAYMENT DISCREPANCIES

VW3704

UNIVAR

P O BOX 34325
SEATTLE WA 98124-1325

www univarusa com

ORIGINAL INVOICE

UNIVAR CINCINNATI
4600 DUES DRIVE
CINCINNATI OH 45246
513-714-5264

590994
KENTUCKY AMERICAN WATER
PO BOX 5610
CHERRY HILL NJ 08034-0510

CUST NO /SHIP TO

590994 001
OWENTON WATER PLANT
220 WATER PLANT LANE
OWENTON KY 40359

INVOICE NO	INV DATE	ORDER NO	CUSTOMER P O NUMBER	FREIGHT TERMS	FOB
CI 867270	10/11/06	588101	15078971	PREPAID (HDR FRT	DELIVERED
SHIP DATE	TAX EXEMPT NO	SALES REP	WAREHOUSE LOCATION	ON TIME DELIVERY	
10/11/06		CHARLIE MILLER	CINCINNATI	UNIVAR USA INC	
			SALES DEPARTMENT	ENTERED BY	
			INDUSTRIAL CHEMICAL	SHELLEY STEVENS	

PRODUCT DESCRIPTION	TAX	QUANTITY ORDERED	QUANTITY SHIPPED B O	BILLING QTY/ UNIT PRICE	EXTENDED AMOUNT
TERMS NET 30			MERCHANDISE		480 00
			DEPOSIT		800 00
			SALES TAX		28 80
			INVOICE TOTAL		1308 80

Buyer agrees that all orders or purchases are ubject to Univar's Standard Terms and Condi ti ns f S le as of the date of shipment a ailable at www univa sa com/salesterms All sales and orders are expressly limited to such terms which may be pdated from t me to time No other terms a d onditio s apply to any purchase or order less agreed to in writ ng by both parties

PLEASE DETACH HERE AND RETURN BOTTOM PORTION WITH YOUR PAYMENT

UNIVAR

CUST NO /SHIP TO

INVOICE NO	INVOICE DATE	AMOUNT DUE	AMOUNT PAID
CI-867270	10/11/06	1308 80	

590994
KENTUCKY AMERICAN WATER
PO BOX 5610
CHERRY HILL NJ 08034-0510

REMIT TO

UNIVAR USA INC
13009 COLLECTIONS CTR DR
CHICAGO IL 60693

PLEASE USE REVERSE SIDE FOR DETAILING DEDUCTIONS OR PAYMENT DISCREPANCIES

2 1 119 1 MB 0 326 64824S11 XRX

UNIVAR

P O BOX 34325
SEATTLE WA 98124 1325

www univarusa com

ORIGINAL INVOICE

UNIVAR CINCINNATI
4600 DUES DRIVE
CINCINNATI OH 45246
513-714-5264

Page 1 OF 2

17010165 SX

2 1 122 1 MB 0 326 83372S11 XRX
590994
KENTUCKY AMERICAN WATER
PO BOX 5610
CHERRY HILL NJ 08034-0510

CUST NO /SHIP TO

590994 001
OWENTON WATER PLANT
220 WATER PLANT LANE
OWENTON KY 40359

CI863606 9/19/06

INVOICE NO	INV DATE	ORDER NO	CUSTOMER P O NUMBER	FREIGHT TERMS	FOB
CI 863606	09/19/06	584125	15078971	PREPAID (HDR FRT	DELIVERED
SHIP DATE	TAX EXEMPT NO	SALES REP	WAREHOUSE LOCATION	ON TIME DELIVERY	
09/19/06		CHARLIE MILLER	CINCINNATI	UNIVAR USA INC	
			SALES DEPARTMENT	ENTERED BY	
			INDUSTRIAL CHEMICAL	SHELLEY STEVENS	

PRODUCT DESCRIPTION	TAX	QUANTITY ORDERED	QUANTITY SHIPPED B O	BILLING QTY/ UNIT PRICE	EXTENDED AMOUNT
240860 CHLORINE 150 LB CY UNIVAR NSF LQGAS CYLINDER PO# 15078971	Y	8 00 CY	8 00 CY	1200 00 0 4000 LB	480 00
333290 RETURNABLE 150# CHLORINE 1 EA EA CYLINDER UNIVAR UNIVR CT **** **** CYLINDER	Y	8 00 EA	8 00 EA	8 00 100 0000 EA	800 00
644207 UNIVAR PACKAGE DELIVERY 1 EA EA CHARGE SPCL CHG **** **** NA	Y	1 00 EA	1 00 EA	1 00 0 0000 EA	0 00

****
* RECENT RISING FUEL COSTS HAVE MADE IT NECESSARY FOR *
* US TO ADD A TEMPORARY FUEL SURCHARGE TO *
* EACH DELIVERY THIS ISEFFECTIVE MARCH 1, 2000 (WE *
* WILL CONTINUE TO MONITOR THE SITUATION AND ADJUST AS *
* CIRCUMSTANCES DICTATE WE APPRECIATE YOUR *
* UNDERSTANDING AND VALUEYOUR BUSINESS *
****

Received
SEP 25 2006
Shared Services Center

10167699 OV

INV TOTAL $1308 80

Buyer agrees that all orders or purchases are subject to Univar's Standard Terms and Co ditio s of Sale as of the date of shipment a ailable at www univarusa com/saleste ms All sales and ord is are e pressly l m ted to such terms which may be updated from time to time No othe terms and conditions a ply to any purchase o orde less ag eed to in writing by both parties

PLEASE DETACH HERE AND RETURN BOTTOM PORTION WITH YOUR PAYMENT

UNIVAR

CUST NO /SHIP TO

INVOICE NO	INVOICE DATE	AMOUNT DUE	AMOUNT PAID
CI-863606	09/19/06	CONTINUED	

590994
KENTUCKY AMERICAN WATER
PO BOX 5610
CHERRY HILL NJ 08034-0510

REMIT TO

UNIVAR USA INC
13009 COLLECTIONS CTR DR
CHICAGO IL 60693

PLEASE USE REVERSE SIDE FOR DETAILING DEDUCTIONS OR PAYMENT DISCREPANCIES

VWRSTM7

UNIVAR

P O BOX 34325
SEATTLE WA 98124 1325

www univarusa com

ORIGINAL INVOICE

UNIVAR CINCINNATI
4600 DUES DRIVE
CINCINNATI OH 45246
513-714-5264

590994
KENTUCKY AMERICAN WATER
PO BOX 5610
CHERRY HILL NJ 08034-0510

CUST NO /SHIP TO

590994 001
OWENTON WATER PLANT
220 WATER PLANT LANE
OWENTON KY 40359

FREIGHT TERMS	FOB
PREPAID (HDR FRT	DELIVERED

INVOICE NO	INV DATE	ORDER NO	CUSTOMER P O NUMBER	WAREHOUSE LOCATION	ON TIME DELIVERY
CI 863606	09/19/06	584125	15078971	CINCINNATI	UNIVAR USA INC

SHIP DATE	TAX EXEMPT NO	SALES REP	SALES DEPARTMENT	ENTERED BY
09/19/06		CHARLIE MILLER	INDUSTRIAL CHEMICAL	SHELLEY STEVENS

PRODUCT DESCRIPTION	TAX	QUANTITY ORDERED	QUANTITY SHIPPED B O	BILLING QTY/ UNIT PRICE	EXTENDED AMOUNT
TERMS NET 30			MERCHANDISE		480 00
			DEPOSIT		~~800 00~~
			SALES TAX		28.80
			INVOICE TOTAL		1308 80

Buyer ag ees that all orders or purchases a e subject to Univar's Standard Terms a d C nditio s of Sale as of the date of sh pment a a lable at www nivarusa com/salesterms All sales and orders e e xpressly l m ted to such terms which m y be updated from time to time No other terms and cond tions apply to any p h se o der unless ag eed to in writ ng by both parties

PLEASE DETACH HERE AND RETURN BOTTOM PORTION WITH YOUR PAYMENT

UNIVAR

CUST NO /SHIP TO

INVOICE NO	INVOICE DATE	AMOUNT DUE	AMOUNT PAID
CI-863606	09/19/06	1308 80	

590994
KENTUCKY AMERICAN WATER
PO BOX 5610
CHERRY HILL NJ 08034-0510

REMIT TO

UNIVAR USA INC
13009 COLLECTIONS CTR DR
CHICAGO IL 60693

PLEASE USE REVERSE SIDE FOR DETAILING DEDUCTIONS OR PAYMENT DISCREPANCIES

2 1 122 1 MB 0 326 83372S11 XRX

UNIVAR

PO BOX 34325
SEATTLE WA 98124-1325

www.univarusa.com

ORIGINAL INVOICE

UNIVAR CINCINNATI
4600 DUES DRIVE
CINCINNATI OH 45246
513-714-5264

1701016S SD
SX

CUST NO /SHIP TO

2 1 162 1 MB 0 326 80996511 XRX
590994
KENTUCKY AMERICAN WATER
PO BOX 5600
CHERRY HILL NJ 08034-0590

590994 001
OWENTON WATER PLANT
220 WATER PLANT LANE
OWENTON KY 40359

CI856788 8/9/06

INVOICE NO	INV DATE	ORDER NO	CUSTOMER P O NUMBER	FREIGHT TERMS	FOB
CI 856788	08/09/06	577425	15078971 15078971	PREPAID (HDR FRT	DELIVERED
SHIP DATE	TAX EXEMPT NO	SALES REP	WAREHOUSE LOCATION	ON TIME DELIVERY	
08/09/06		CHARLIE MILLER	CINCINNATI	UNIVAR USA INC	
			SALES DEPARTMENT	ENTERED BY	
			INDUSTRIAL CHEMICAL	SHELLEY STEVENS	

PRODUCT DESCRIPTION	TAX	QUANTITY ORDERED	QUANTITY SHIPPED B O	BILLING QTY/ UNIT PRICE	EXTENDED AMOUNT
240860 CHLORINE 150 LB CY UNIVAR NSF LQGAS CYLINDER PO# 15078971	Y	10 00 CY	10 00 CY	1500 00 0 4000 LB	600 00
333290 RETURNABLE 150# CHLORINE 1 EA EA CYLINDER UNIVAR UNIVR CT **** **** CYLINDER	Y	10 00 EA	10 00 EA	10 00 100 0000 EA	1000 00
644207 UNIVAR PACKAGE DELIVERY 1 EA EA CHARGE SPCL CHG **** **** NA	Y	1 00 EA	1 00 EA	1 00 0 0000 EA	0 00

****
* RECENT RISING FUEL COSTS HAVE MADE IT NECESSARY FOR *
* US TO ADD A TEMPORARY FUEL SURCHARGE TO *
* EACH DELIVERY THIS ISEFFECTIVE MARCH 1, 2000 WE *
* WILL CONTINUE TO MONITOR THE SITUATION AND ADJUST AS *
* CIRCUMSTANCES DICTATE WE APPRECIATE YOUR *
* UNDERSTANDING AND VALUEYOUR BUSINESS *
****

INV TOTAL $1636 00

Received
AUG 14 2006
Shared Services Center

10163655 OV

Buyer agrees that all orders or purchases are subject to Univar's Standard Terms and Conditions of Sale as of the date of shipment available at www.univarusa.com/sale_terms All sales and orders are expressly limited to such terms which may be updated from time to time No other terms and conditions apply to any purchase or order unless agreed to in writing by both parties

PLEASE DETACH HERE AND RETURN BOTTOM PORTION WITH YOUR PAYMENT

UNIVAR

CUST NO /SHIP TO

INVOICE NO	INVOICE DATE	AMOUNT DUE	AMOUNT PAID
CI-856788	08/09/06	CONTINUED	

590994
KENTUCKY AMERICAN WATER
PO BOX 5600
CHERRY HILL NJ 08034-0590

REMIT TO

UNIVAR USA INC
13009 COLLECTIONS CTR DR
CHICAGO IL 60693

PLEASE USE REVERSE SIDE FOR DETAILING DEDUCTIONS OR PAYMENT DISCREPANCIES

UNIVAR

P O BOX 34325
SEATTLE WA 98124-1325

www univarusa com

ORIGINAL INVOICE

UNIVAR CINCINNATI
4600 DUES DRIVE
CINCINNATI OH 45246
513-714-5264

590994
KENTUCKY AMERICAN WATER
PO BOX 5600
CHERRY HILL NJ 08034-0590

CUST NO /SHIP TO

590994 001
OWENTON WATER PLANT
220 WATER PLANT LANE
OWENTON KY 40359

INVOICE NO	INV DATE	ORDER NO	CUSTOMER PO NUMBER	FREIGHT TERMS	FOB
CI 856788	08/09/06	577425	15078971	PREPAID (HDR FRT	DELIVERED

SHIP DATE	TAX EXEMPT NO	SALES REP	WAREHOUSE LOCATION	ON TIME DELIVERY
08/09/06		CHARLIE MILLER	CINCINNATI	UNIVAR USA INC

SALES DEPARTMENT	ENTERED BY
INDUSTRIAL CHEMICAL	SHELLEY STEVENS

PRODUCT DESCRIPTION	TAX	QUANTITY ORDERED	QUANTITY SHIPPED B O	BILLING QTY / UNIT PRICE	EXTENDED AMOUNT
			MERCHANDISE		600 00
			DEPOSIT		~~1000 00~~
			SALES TAX		36 00
TERMS NET 30			INVOICE TOTAL		1636 00

Received
AUG 14 2006
Shared Services Center

Buyer agrees that all orders or purchases are subject to Univar's Standard Terms and Conditions of Sale as of the date of shipment available at www.univarusa.com/salesterms. All sales and orders are expressly limited to such terms which may be updated from time to time. No other terms and conditions apply to any purchase or order unless agreed to in writing by both parties.

PLEASE DETACH HERE AND RETURN BOTTOM PORTION WITH YOUR PAYMENT

UNIVAR

CUST NO /SHIP TO

INVOICE NO	INVOICE DATE	AMOUNT DUE	AMOUNT PAID
CI-856788	08/09/06	1636 00	

590994
KENTUCKY AMERICAN WATER
PO BOX 5600
CHERRY HILL NJ 08034-0590

REMIT TO

UNIVAR USA INC
13009 COLLECTIONS CTR DR
CHICAGO IL 60693

PLEASE USE REVERSE SIDE FOR DETAILING DEDUCTIONS OR PAYMENT DISCREPANCIES

2 1 162 1 MB 0 326 80996S11 XRX

UNIVAR

P O BOX 34325
SEATTLE WA 98124-1325

www univarusa com

ORIGINAL INVOICE

UNIVAR CINCINNATI
4600 DUES DRIVE
CINCINNATI OH 45246
513-714-5264

Page 1 OF 2

17010165 SX

590994
KENTUCKY AMERICAN WATER
PO BOX 5600
CHERRY HILL NJ 08034-0590

CUST NO /SHIP TO

590994 001
OWENTON WATER PLANT
220 WATER PLANT LANE
OWENTON KY 40359

A12SUPV05

CI848312 6/21/06

INVOICE NO	INV DATE	ORDER NO	CUSTOMER PO NUMBER	FREIGHT TERMS	FOB
CI 848312	06/21/06	568548	15078971 15078971	PREPAID (HDR FRT	DELIVERED
SHIP DATE	TAX EXEMPT NO	SALES REP		WAREHOUSE LOCATION	ON TIME DELIVERY
06/21/06		CHARLIE MILLER		CINCINNATI	UNIVAR USA INC
				SALES DEPARTMENT	ENTERED BY
				INDUSTRIAL CHEMICAL	SHELLEY STEVENS

PRODUCT DESCRIPTION	TAX	QUANTITY ORDERED	QUANTITY SHIPPED B O	BILLING QTY/ UNIT PRICE	EXTENDED AMOUNT
240860 CHLORINE 150 LB CY UNIVAR NSF LQGAS CYLINDER PO# 15078971	Y	10 00 CY	10 00 CY	1500 00 0 4000 LB	600 00
333290 RETURNABLE 150# CHLORINE 1 EA EA CYLINDER UNIVAR UNIVR CT **** **** CYLINDER	Y	10 00 EA	10 00 EA	10 00 100 0000 EA	~~1000 00~~
644207 UNIVAR PACKAGE DELIVERY 1 EA EA CHARGE SPCL CHG **** **** NA	Y	1 00 EA	1 00 EA	1 00 0 0000 EA	0 00

****
* RECENT RISING FUEL COSTS HAVE MADE IT NECESSARY FOR *
* US TO ADD A TEMPORARY FUEL SURCHARGE TO *
* EACH DELIVERY THIS ISEFFECTIVE MARCH 1, 2000 WE *
* WILL CONTINUE TO MONITOR THE SITUATION AND ADJUST AS *
* CIRCUMSTANCES DICTATE WE APPRECIATE YOUR *
* UNDERSTANDING AND VALUEYOUR BUSINESS *
****

INV TOTAL ~~$1636 00~~ 636 00

Need Rec Doc #

Received
JUN 26 2006
Shared Services Center

Buyer agrees that all orders and purchases are subject to Univar Standard Terms and Conditions of Sale as of the date of shipment available at www.univarusa.com/salesterms. All [illegible] may be [illegible] [illegible] unless agreed to in writing by both parties.

PLEASE DETACH HERE AND RETURN BOTTOM PORTION WITH YOUR PAYMENT

UNIVAR

CUST NO /SHIP TO

INVOICE NO	INVOICE DATE	AMOUNT DUE	AMOUNT PAID
CI-848312	06/21/06	CONTINUED	

590994
KENTUCKY AMERICAN WATER
PO BOX 5600
CHERRY HILL NJ 08034-0590

REMIT TO

UNIVAR USA INC
13009 COLLECTIONS CTR DR
CHICAGO IL 60693

PLEASE USE REVERSE SIDE FOR DETAILING DEDUCTIONS OR PAYMENT DISCREPANCIES

UNIVAR

P O BOX 34325
SEATTLE WA 98124-1325

www.univarusa.com

ORIGINAL INVOICE

UNIVAR CINCINNATI
4600 DUES DRIVE
CINCINNATI OH 45246
513-714-5264

Page 2 OF 2

590994
KENTUCKY AMERICAN WATER
PO BOX 5600
CHERRY HILL NJ 08034-0590

CUST NO /SHIP TO

590994 001
OWENTON WATER PLANT
220 WATER PLANT LANE
OWENTON KY 40359

INVOICE NO	INV DATE	ORDER NO	CUSTOMER P.O. NUMBER	FREIGHT TERMS	FOB
CI 848312	06/21/06	568548	15078971	PREPAID (HDR FRT	DELIVERED
SHIP DATE	TAX EXEMPT NO	SALES REP		WAREHOUSE LOCATION	ON TIME DELIVERY
06/21/06		CHARLIE MILLER		CINCINNATI	UNIVAR USA INC
				SALES DEPARTMENT	ENTERED BY
				INDUSTRIAL CHEMICAL	SHELLEY STEVENS

PRODUCT DESCRIPTION	TAX	QUANTITY ORDERED	QUANTITY SHIPPED B O	BILLING QTY./ UNIT PRICE	EXTENDED AMOUNT
			MERCHANDISE		600 00
			DEPOSIT		~~1000.00~~
			SALES TAX		36 00
TERMS NET 30			INVOICE TOTAL		~~1636 00~~
					636 00

Received
JUN 2 6 2006
Shared Services Center

Received
JUN 2 6 2006
Shared Services Center

Buyer agrees that all orders or purchases are subject to Univar's Standard Terms and Conditions of Sale as of the date of shipment available at www.univarusa.com/salesterms. All sales and orders are expressly limited to such terms which may be updated from time to time. Univar's terms and conditions apply to any purchase or order unless agreed to in writing by both parties.

PLEASE DETACH HERE AND RETURN BOTTOM PORTION WITH YOUR PAYMENT

UNIVAR

CUST NO /SHIP TO

INVOICE NO	INVOICE DATE	AMOUNT DUE	AMOUNT PAID
CI-848312	06/21/06	1636 00	

590994
KENTUCKY AMERICAN WATER
PO BOX 5600
CHERRY HILL NJ 08034-0590

REMIT TO

UNIVAR USA INC
13009 COLLECTIONS CTR DR
CHICAGO IL 60693

PLEASE USE REVERSE SIDE FOR DETAILING DEDUCTIONS OR PAYMENT DISCREPANCIES

2 1 148 1 M3 0 326 78002S11 XRX

AQUATIC CONTROL

INVOICE

P.O. Box 100 • Seymour, Indiana 47274
812-497-2410 • 800-753-LAKE
www.aquaticcontrol.com

INVOICE NO.	100082
INVOICE DATE	07/06/10

ACCOUNT NO.	8163

Kentucky American Water
PO Box 5600
Cherry Hill, NJ 08034

10001049

A125ECOS

Kentucky American Water
102 N. Main
Owenton, KY 40359

Thomas Lake

PURCHASE ORDER #	TERMS	TICKET #
15139680	Net 30 Days	122707

QTY.	ITEM	DESCRIPTION	UNIT PRICE	EXTENSION
40.000	L00118	Algimycin PWF	17.490	699.60
		($1.7476/lb & 10.008lb/gal)		

Received
JUL - 9 2010
SSC-Mailroom

COMMENTS

SUB-TOTAL	699.60
SALES TAX	0.00
FREIGHT	0.00
INVOICE TOTAL	699.60
AMOUNT RECEIVED	0.00
BALANCE DUE	699.60

1000149
KY

AQUATIC CONTROL

P.O. Box 100 • Seymour, Indiana 47274
812-497-2410 • 800-753-LAKE
www.aquaticcontrol.com

INVOICE

NSX

INVOICE NO.	98346
INVOICE DATE	05/19/10

ACCOUNT NO.	8163

Kentucky American Water
PO Box 5600
Cherry Hill, NJ 08034

Kentucky American Water
2300 Richmond Road
Lexington, KY 40502

revised Bill

A12secos

120985

PURCHASE ORDER #	TERMS	TICKET #
15139680	Net 30 Days	

QTY.	ITEM	DESCRIPTION	UNIT PRICE	EXTENSION
20.000	L00118	Algimycin PWF	17.490	349.80
		($1.7476/lb & 10.008lb/gallon)		

Received KY
MAY 20 2010
Shared Services Center

COMMENTS

SUB-TOTAL	349.80
SALES TAX	0.00
FREIGHT	0.00
INVOICE TOTAL	349.80
AMOUNT RECEIVED	0.00
BALANCE DUE	349.80

Kemira Water Solutions, Inc
316 Bartow Municipal Airport
Bartow FL 33830
Tel 863 533 5990 Fax 863 533 7077

17008878

Invoice No 200198
Date 11/08/06
Batch No 10 369

Remit To
Kemira Water Solutions Inc
Dept AT 952343
Atlanta GA 31192 2343

Received
NOV 15 2006
SSC-Mailroom

Sold To
American Water (KY)
PO Box 5088

Mt Laurel NJ 08054 1108
AM Water Ky

Ship To
Kentucky American Water
220 Water Plant Lane

Owentown KY
AmWater(KY)Owentown

Customer No	P O No	Terms
	15079747	NET 30

Delivery Date	Description	Bill Quantity	Rate	Amount
11/06/06	Product & delivery of PW FERRIC CHLORIDE AWWA 3 BL No 1304126 Ref 15079747 34280 LB 13 1% Conc 38 0462%	6 521 DTON	500 0	3 260 50

10173085 CV

	$3 260 50
None	0 00
None	0 00
TOTAL	$3 260 50

KEMIRON COMPANIES, INC
316 Bartow Municipal Airport
Bartow FL 33830
Tel 863 533 5990 Fax 863 533 7077

Invoice No 195253
Date 09/29/06
Batch No 795

17008878 AP

Remit To

Kemiron Companies Inc
Dept AT 952343
Atlanta GA 31192 2343

Sold To

American Water (KY)
PO Box 5088

Mt Laurel NJ 08054 1108

AM Water Ky

Ship To

Kentucky American Water
220 Water Plant Lane

Owentown KY

AmWater(KY)Owentown

Customer No	P O No	15079747	Terms	NET 30

Delivery Date	Description	Bill Quantity	Rate	Amount
09/26/06	Product & delivery of PW FERRIC CHLORIDE AWWA 3 BL No 1295307 Ref 15079747 Man 6AM-8PM 34920 LB 13 22% Conc 38 3967%	6 704 DTON	500 0	3 352 00

10169596 AV

Received
OCT 12 2006
Shared Services Center

	$3 352 00
None	0 00
None	0 00
TOTAL	$3 352 00

$3,352.00

KEMIRON COMPANIES, INC
316 Bartow Municipal Airport
Bartow FL 33830
Tel 863 533 5990 Fax 863 533 7077

Invoice No 182143
Date 06/09/06
Batch No 8 378

17008878

Remit To

Kemiron Companies Inc
MSC #377
PO Box 850001
Orlando FL 32885 0377

Sold To

American Water (KY)
PO Box 5088

Mt Laurel NJ 08054 1108
AM Water Ky

Ship To

Kentucky American Water
220 Water Plant Lane

Owentown KY
AmWater(KY)Owentown

Customer No	P O No 15079747	Terms NET 30

Delivery Date	Description	Bill Quantity	Rate	Amount
06/05/06	Product & delivery of PW FERRIC CHLORIDE AWWA 3 BL No 1268649 Ref 15079747 Man 3000 GALLONS 35960 LB 38 774s	6 972 DTON	500 0	3 486 00

10156484 OV

Received
JUN 23 2006
Shared Services Center

	$3 486 00
None	0 00
None	0 00
TOTAL	$3 486 00

3486 00

KEMIRON COMPANIES, INC
316 Bartow Municipal Airport
Bartow FL 33830
Tel 863 533 5990 Fax 863 533 7077

Invoice No 179725
Date 05/10/06
Batch No 8 124

17008878 RD

Received
MAY 17 2006
Shared Services Center

Remit To

Kemiron Companies Inc
MSC #377
PO Box 850001
Orlando FL 32885 0377

Sold To

American Water (KY)
PO Box 5088

Mt Laurel NJ 08054 1108
AM Water Ky

Ship To

Kentucky American Water
220 Water Plant Lane

Owentown KY
AmWater(KY)Owentown

Customer No	P O No 15073285	Terms NET 30

Delivery Date	Description	Bill Quantity	Rate	Amount
05/05/06	Product & delivery of PW FERRIC CHLORIDE AWWA 3 BL No 1262788 Ref 15073285 Man AM DELIVERY 35600 LB 39 529%	7 036 DTON	500 0	3 518 00

10153600 OV
UNIT PRICE PROBLEM

	$3 518 00
None	0 00
None	0 00
TOTAL	$3 518 00

UNIVAR

PO BOX 34325
SEATTLE WA 98124 1325

www univarusa com

ORIGINAL INVOICE

UNIVAR CINCINNATI
4600 DUES DRIVE
CINCINNATI OH 45246
513-714-5264

Page 1 OF 1

17010165 Received AUG 30 2006 SX

2 1 167 1 MB 0 326 81903511 XRX
590994
KENTUCKY AMERICAN WATER
PO BOX 5610
CHERRY HILL NJ 08034-0510

CUST NO /SHIP TO

590994 001
OWENTON WATER PLANT
220 WATER PLANT LANE
OWENTON KY 40359

A12SEC05

CI 859359 8/18/06

INVOICE NO	INV DATE	ORDER NO	CUSTOMER PO NUMBER	FREIGHT TERMS	FOB
CI 859359	08/18/06	579342	15079747	PREPAID AND ADD	DELIVERED
SHIP DATE	TAX EXEMPT NO	SALES REP	WAREHOUSE LOCATION	ON TIME DELIVERY	
08/18/06		CHARLIE MILLER	DIRECT WAREHOUSE	VENDOR CHOICE BULK	
			SALES DEPARTMENT	ENTERED BY	
			INDUSTRIAL CHEMICAL	SHELLEY STEVENS	

PRODUCT DESCRIPTION	TAX	QUANTITY ORDERED	QUANTITY SHIPPED B O	BILLING QTY/ UNIT PRICE	EXTENDED AMOUNT
607798 FERRIC CHLORIDE 37-42% 1 LB LB WATER TREAT DWG WET BASIS PVS CHM WAT TRT SOLN BULK	Y	35820 00 LB	34480 00 LB	34480 00 0 1050 LB	3620 40
**********					
* RECENT RISING FUEL COSTS HAVE MADE IT NECESSARY FOR *					
* US TO ADD A TEMPORARY FUEL SURCHARGE TO *					
* EACH DELIVERY THIS ISEFFECTIVE MARCH 1, 2000 WE *					
* WILL CONTINUE TO MONITOR THE SITUATION AND ADJUST AS *					
* CIRCUMSTANCES DICTATE WE APPRECIATE YOUR *					
* UNDERSTANDING AND VALUEYOUR BUSINESS. *					
**********					
NEED Rec Doc #					
			MERCHANDISE		3620 40
			SALES TAX		217 22
TERMS NET 30			INVOICE TOTAL		3837 62

Buyer agrees that all orders or purchases are subject t U nivar's Sta dard Te ms and Conditions of Sale as of the date of sh pment a lable at www univarusa com/salesterms All sales and orders are expressly limited to s ch te ms which may be updated from time to time N other forms and no t o s pply to any purchase or order unless agreed to in writ g by both parties

PLEASE DETACH HERE AND RETURN BOTTOM PORTION WITH YOUR PAYMENT

UNIVAR

CUST NO /SHIP TO

INVOICE NO	INVOICE DATE	AMOUNT DUE	AMOUNT PAID
CI-859359	08/18/06	3837 62	

590994
KENTUCKY AMERICAN WATER
PO BOX 5610
CHERRY HILL NJ 08034-0510

REMIT TO

UNIVAR USA INC
13009 COLLECTIONS CTR DR
CHICAGO IL 60693

PLEASE USE REVERSE SIDE FOR DETAILING DEDUCTIONS OR PAYMENT DISCREPANCIES

VWRSTMT

UNIVAR

P O BOX 34325
SEATTLE WA 98124-1325

www univarusa com

ORIGINAL INVOICE

UNIVAR CINCINNATI
4600 DUES DRIVE
CINCINNATI OH 45246
513-714-5264

Page 1 OF 1

17010165 SX

CUST NO /SHIP TO

2 1 141 1 MB 0 326 79663S11 XRX
590994
KENTUCKY AMERICAN WATER
PO BOX 5600
CHERRY HILL NJ 08034-0590

590994 001
OWENTON WATER PLANT
220 WATER PLANT LANE
OWENTON KY 40359

A12 SUPV 05

CI852780 7/10/06

INVOICE NO	INV DATE	ORDER NO	CUSTOMER PO NUMBER	FREIGHT TERMS	FOB
CI 852780	07/10/06	571843	15079747 15079747	PREPAID AND ADD	DELIVERED
SHIP DATE	TAX EXEMPT NO	SALES REP		WAREHOUSE LOCATION	ON TIME DELIVERY
07/10/06		CHARLIE MILLER		DIRECT WAREHOUSE	VENDOR CHOICE BULK
				SALES DEPARTMENT	ENTERED BY
				INDUSTRIAL CHEMICAL	SHELLEY STEVENS

PRODUCT DESCRIPTION	TAX	QUANTITY ORDERED	QUANTITY SHIPPED B O	BILLING QTY/ UNIT PRICE	EXTENDED AMOUNT
607798 FERRIC CHLORIDE 37-42% 1 LB LB WATER TREAT DWG WET BASIS PVS CHM WAT TRT SOLN BULK	Y	35820 00 LB	45860 00 LB	45860 00 0 1050 LB	4815 30
********** * RECENT RISING FUEL COSTS HAVE MADE IT NECESSARY FOR * * US TO ADD A TEMPORARY FUEL SURCHARGE TO * * EACH DELIVERY THIS ISEFFECTIVE MARCH 1, 2000 WE * * WILL CONTINUE TO MONITOR THE SITUATION AND ADJUST AS * * CIRCUMSTANCES DICTATE WE APPRECIATE YOUR * * UNDERSTANDING AND VALUEYOUR BUSINESS. * **********					
				MERCHANDISE	4815 30
				SALES TAX	288 92
TERMS NET 30				INVOICE TOTAL	5104 22

Received
JUL 24 2006
Shared Services Center

10159578 OV
UNIT PRICE PROBLEM

ALSO, P.O BELONGS TO KEMIRON

Buyer agrees that all orders o purchases are subject to Univar's Standard Terms and Conditions of Sale as of the date of shipment available at www univarusa com/sale te sales a o orders are expressly limited to such terms wh hm be ord tedfromt me to m ther terms and conditions apply to any pu chase o order unless agreed to writing by both parties

PLEASE DETACH HERE AND RETURN BOTTOM PORTION WITH YOUR PAYMENT

UNIVAR

CUST NO /SHIP TO

INVOICE NO	INVOICE DATE	AMOUNT DUE	AMOUNT PAID
CI-852780	07/10/06	5104 22	

590994
KENTUCKY AMERICAN WATER
PO BOX 5600
CHERRY HILL NJ 08034-0590

REMIT TO

UNIVAR USA INC
13009 COLLECTIONS CTR DR
CHICAGO IL 60693

PLEASE USE REVERSE SIDE FOR DETAILING DEDUCTIONS OR PAYMENT DISCREPANCIES

Kemira

Invoice No: 2018415
Invoice Date: 06/30/2007
Batch No: 2001644

Kemira Water Solutions
316 Bartow Municipal Airport
Bartow, FL 33830
Tel: 863-533-5990
Fax: 863-533-7077

Received
JUL 05 2007
SSC-Mailroom

Remit To:

Kemira Water Solutions, Inc.
Dept AT 952343
Atlanta , GA 31192-2343

Sold To: V#

American Water (KY)
PO Box 5600
Cherry Hill , NJ 08034-0590

Ship To:

Kentucky American Water
220 Water Plant Lane,
Owentown , KY

AmWater(KY)Owentown

P.O. No: 15092238 **Terms:** NET 30

Delivery	Description	Bill Quantity	Rate	Amount
06/27/2007	Product & delivery of PW FERRIC CHLORIDE AWWA 3 BL No.: 3027016 PO: 15092238 Ref: 15092238 Weight = 35220 LB, SPG = 1.4160, %Fe = 13.3200%, Conc = 38.6872%	6.8130 DTON Rec Doc # 1019630	545.00000	3,713.09

SubTotal :	3,713.09
Sales Tax	$0.00
Total :	$3,713.09

Kemira

Kemira Water Solutions

316 Bartow Municipal Airport
Bartow, FL 33830
Tel: 863-533-5990
Fax: 863-533-7077

Invoice No: 2011634
Invoice Date: 05/23/2007
Batch No: 2001092

Received
MAY 29 2007
SSC-Mailroom

Remit To:
Kemira Water Solutions, Inc.
Dept AT 952343
Atlanta, GA 31192-2343

17008878

Sold To:
American Water (KY)
PO Box 5600
Cherry Hill, NJ 08034-0590

Ship To:
Kentucky American Water
220 Water Plant Lane
Owentown, KY

AmWater(KY)Owentown

P.O. No:	15092238	Terms:	NET 30

Delivery	Description	Bill Quantity	Rate	Amount
05/18/2007	Product & delivery of PW FERRIC CHLORIDE AWWA 3 BL No.: 3015549 PO: 15092238 Ref: 15092238 Weight = 34940 LB, SPG = 1.4080, %Fe = 13.1600%, Conc = 38.2225%	6.6770 DTON	545.00000	3,638.97

10191829 OV

SubTotal:	3,638.97
Sales Tax	$0.00
Total:	$3,638.97

kemira

Kemira Water Solutions

316 Bartow Municipal Airport
Bartow FL 33830
Tel 863 533 5990
Fax 863 533 7077

Received
APR 12 2007
SSC-Mailroom

Invoice No 2004520
Invoice Date 04/09/2007
Batch No 2000505

Remit To

Kemira Water Solutions Inc
Dept AT 952343
Atlanta GA 31192 2343

Sold To

1700 8878

American Water (KY)
PO Box 5600
Cherry Hill NJ 08034 0590

Ship To

Kentucky American Water
220 Water Plant Lane
Owentown KY

AmWater(KY)Owentown

P O No	15092238	Terms	NET 30

Delivery	Description	Bill Quantity	Rate	Amount
04/02/2007	Product & delivery of PW FERRIC CHLORIDE AWWA 3 BL No 3005704 Ref 15092238 Weight = 34800 LB SPG = 1 4030 %Fe = 13 1000% Conc = 38 0482%	6 6200 DTON	500 00000	3 310 00

10187383 OV

SubTotal	$3 310 00
Sales Tax	$0 00
Total	$3 310 00

Kemira Water Solutions, Inc
316 Bartow Municipal Airport
Bartow FL 33830
Tel 863 533 5990 Fax 863 533 7077

Invoice No 207904
Date 01/17/07
Batch No 11 223

1700887B

Remit To

Kemira Water Solutions Inc
Dept AT 952343
Atlanta GA 31192 2343

Sold To

American Water (KY)
PO Box 5088

Mt Laurel NJ 08054 1108

Ship To

Kentucky American Water
220 Water Plant Lane

Owentown KY
AmWater(KY)Owentown

Customer No	AM Water Ky	P O No	15079747	Terms	NET 30

Delivery Date	Description	Bill Quantity	Rate	Amount
01/15/07	Product & delivery of PW FERRIC CHLORIDE AWWA 3 BL No 1318865 Ref 15079747 Man " 3000 GALLONS 43740 LB 15 7% Conc 39 7909%	8 702 DTON	500 0	4 351 00

10179547 OV
UNIT PRICE PROBLEM

Received
FEB - 2 2007
Center

	$4 351 00
None	0 00
None	0 00
TOTAL	$4 351 00

Please remit to:

Applied Specialties, Inc.
P.O. Box 307
Avon Lake, OH 44012

Received
AUG 0 9 2007
SSC-Mailroom

Invoice

Invoice No: 115963
Our Sales Order: 115963

MP-0354 074

Sold To:
American Water - Kentucky
American Water Shared Services Center
P.O. Box 5610
Cherry Hill, NJ 08034
Attn: Accounts Payable Dept.

5004733 6mbe

Ship To:
American Water - Kentucky
Kentucky American Water Company
220 Water Plant Lane
Owenton, KY 40359

Invoice Date	Terms	Date Shipped	Ship Via	Freight Terms	FOB	Your P.O. No.
7/31/2007	Net 30	7/31/2007	JCK	DELVD	SP	15096768

Quantity	UOM	Material Description	Price UOM	Unit Price	Total
12	DR	AS-2814* 640 lbs/dr NSF Lot #: 0720828141 Material Safety Data Sheet Included NSF Certified Certified to NSF/ANSI 60 Standards by NSF. Maximum certified limit under NSF/ANSI 60 certification 263 mg/L.	LBS	$ .55	$ 4,224.00
1	EA	Freight Charge	EA	$ 0	$ .00

Rec Doc #
A12P0C

Sales Tax	$	253.44
Total	$	4,477.44

33555 Pin Oak Parkway, Avon Lake, OH 44012
PH 440-933-9442 FX 440-933-9439

Please remit to:

Applied Specialties, Inc.
P.O. Box 307
Avon Lake, OH 44012

Received
NOV 30 2007
SSC-Mailroom

Invoice

Invoice No: 117198
Our Sales Order: 117198

MP-0354 074

Sold To:
American Water - Kentucky
American Water Shared Services Center
Attn: Accounts Payable Dept.
P.O. Box 5610
Cherry Hill, NJ 08034

50047336

Ship To:
American Water - Kentucky
Kentucky American Water Company
220 Water Plant Lane
Owenton, KY 40359

Invoice Date	Terms	Date Shipped	Ship Via	Freight Terms	FOB	Your P.O. No.
11/27/2007	Net 30	11/27/2007	KUHNLE	DELVD	SP	15101965

Quantity	UOM	Material Description	Price UOM	Unit Price	Total
34,060	LBS	AS-2814* Bulk NSF Lot #: 0732528141 Material Safety Data Sheet Included NSF Certified Certified to NSF/ANSI 60 Standards by NSF. Maximum certified limit under NSF/ANSI 60 certification 263 mg/L.	LBS	$ .26	$ 8,855.60

OV
10213156

Sales Tax	$	.00
Total	$	8,855.60

33555 Pin Oak Parkway, Avon Lake, OH 44012
PH 440-933-9442 FX 440-933-9439

If your payment is returned unpaid, you authorize Applied Specialties, Inc. to electronically debit your bank account for the amount of the check, plus an additional one-time electronic fund transfer from your bank account for a returned-check fee. The returned-check fee will be calculated as follows: $30 or 10% of the face amount whichever is greater).

Please remit to:

Applied Specialties, Inc.
P.O. Box 307
Avon Lake, OH 44012

Invoice

Invoice No: 116378
Our Sales Order: 116378

5000 47336

MP-0354 074

Sold To:
American Water - Kentucky
American Water Shared Services Center
P.O. Box 5610
Cherry Hill, NJ 08034
Attn: Accounts Payable Dept.

SL

Ship To:
American Water - Kentucky
Kentucky American Water Company
220 Water Plant Lane
Owenton, KY 40359

Invoice Date	Terms	Date Shipped	Ship Via	Freight Terms	FOB	Your P.O. No.
9/18/2007	Net 30	9/18/2007	KUHNLE	DELVD	SP	15096768

Quantity	UOM	Material Description	Price UOM	Unit Price	Total
33,840	LBS	AS-2814* Bulk NSF Lot #: 0725428141 Material Safety Data Sheet Included NSF Certified Certified to NSF/ANSI 60 Standards by NSF. Maximum certified limit under NSF/ANSI 60 certification 263 mg/L.	LBS	$ .26	$ 8,798.40
1	EA	Freight Charge	EA	$ 0	$ .00

Need Rec Doc's

A12SEC05

Received
SEP 21 2007
SSC-Mailroom

SL

Sales Tax	$	527.90
Total	$	9,326.30

33555 Pin Oak Parkway, Avon Lake, OH 44012
PH 440-933-9442 FX 440-933-9439

If your payment is returned unpaid, you authorize Applied Specialties, Inc. to electronically debit your bank account for the amount of the check, plus an additional one-time electronic fund transfer from your bank account for a returned-check fee. The returned-check fee will be calculated as follows: $30 or 10% of the face amount (whichever is greater).

UNIVAR

P.O. BOX 34325
SEATTLE, WA 98124-1325

www.univarusa.com

ORIGINAL INVOICE

UNIVAR CINCINNATI
4600 DUES DRIVE
CINCINNATI OH 45246
513-714-5264

Received
NOV 0 5 2007
SSC-Mailroom

2.1.148 1 MB 0.360 62550S11.XRX
590994
KENTUCKY AMERICAN WATER
PO BOX 5610
CHERRY HILL NJ 08034-0510

CUST. NO./SHIP TO

590994 001
OWENTON WATER PLANT
220 WATER PLANT LANE
OWENTON KY 40359

17010165

INVOICE NO.	INV. DATE	ORDER NO.	CUSTOMER P.O. NUMBER	FREIGHT TERMS	FOB
CI-925790	10/25/07	650819	15092681	PREPAID (HDR FRT - R	DELIVERED
SHIP DATE	**TAX EXEMPT NO.**	**SALES REP.**		**WAREHOUSE LOCATION**	**ON TIME DELIVERY**
10/25/07	040590.X	CHARLIE MILLER		CINCINNATI	UNIVAR USA INC.
				SALES DEPARTMENT	**ENTERED BY**
				INDUSTRIAL CHEMICAL	SHELLEY STEVENS

PRODUCT DESCRIPTION	TAX	QUANTITY ORDERED	QUANTITY SHIPPED B.O.	BILLING QTY./ UNIT PRICE	EXTENDED AMOUNT
642346 HYDRODARCO B 40 LB BG ACTIVATED CARBON DOMESTIC AM NORIT TECH POWDR BAG LOT #: 867147	N	50.00 BG	50.00 BG	2000.00 0.6500 LB	1300.00
644207 UNIVAR PACKAGE DELIVERY 1 EA EA CHARGE SPCL CHG **** **** NA	N	1.00 EA	1.00 EA	1.00 0.0000 EA	0.00

***

UNIVAR

P.O. BOX 34325
SEATTLE, WA 98124-1325

www.univarusa.com

ORIGINAL INVOICE

UNIVAR CINCINNATI
4600 DUES DRIVE
CINCINNATI OH 45246
513-714-5264

Page 1 OF 1

1701016 5
Rec
10211302

590994
KENTUCKY AMERICAN WATER
PO BOX 5610
CHERRY HILL NJ 08034-0510

CUST. NO./SHIP TO

590994 001
OWENTON WATER PLANT
220 WATER PLANT LANE
OWENTON KY 40359

INVOICE NO.	INV. DATE	ORDER NO.	CUSTOMER P.O. NUMBER	FREIGHT TERMS	FOB
CI-927876	11/07/07	652732	15092681	PREPAID (HDR FRT -	DELIVERED
SHIP DATE	TAX EXEMPT NO.	SALES REP.	WAREHOUSE LOCATION	ON TIME DELIVERY	
11/07/07	040590.X	CHARLIE MILLER	CINCINNATI	UNIVAR USA INC.	
			SALES DEPARTMENT	ENTERED BY	
			INDUSTRIAL CHEMICAL	LARA HAMILTON	

PRODUCT DESCRIPTION	TAX	QUANTITY ORDERED	QUANTITY SHIPPED B.O.	BILLING QTY./ UNIT PRICE	EXTENDED AMOUNT
642346 HYDRODARCO B 40 LB BG ACTIVATED CARBON DOMESTIC AM NORIT TECH POWDR BAG LOT #: 867147 BLANKET PO # 15092681	N	50.00 BG	50.00 BG	2000.00 0.6500 LB	1300.00
644207 UNIVAR PACKAGE DELIVERY 1 EA EA CHARGE SPCL CHG **** **** NA	N	1.00 EA	1.00 EA	1.00 0.0000 EA	0.00

****
* RECENT RISING FUEL COSTS HAVE MADE IT NECESSARY FOR *
* US TO ADD A TEMPORARY FUEL SURCHARGE TO *
* EACH DELIVERY. THIS ISEFFECTIVE MARCH 1, 2000. WE *
* WILL CONTINUE TO MONITOR THE SITUATION AND ADJUST AS *
* CIRCUMSTANCES DICTATE. WE APPRECIATE YOUR *
* UNDERSTANDING AND VALUEYOUR BUSINESS. *
****

Received
NOV 14 2007
SSC-Mailroom

Univar USA Inc.

MERCHANDISE: 1300.00
TERMS: NET 30 INVOICE TOTAL: 1300.00

Remittance addresses have been updated.
Please confirm your system address conforms to the invoice Remit-To address.

Buyer agrees that all orders or purchases are subject to Univar's Standard Terms and Conditions of Sale as of the date of shipment available at www.univarusa.com/salesterms. All sales and orders are expressly limited to such terms, which may be updated from time to time. No other terms and conditions apply to any purchase or order unless agreed to in writing by both parties.

PLEASE DETACH HERE AND RETURN BOTTOM PORTION WITH YOUR PAYMENT

UNIVAR

CUST. NO./SHIP TO

INVOICE NO	INVOICE DATE	AMOUNT DUE	AMOUNT PAID
CI-927876	11/07/07	1300.00	

590994
KENTUCKY AMERICAN WATER
PO BOX 5610
CHERRY HILL NJ 08034-0510

REMIT TO

UNIVAR USA INC
13009 COLLECTIONS CTR DR
CHICAGO IL 60693

PLEASE USE REVERSE SIDE FOR DETAILING DEDUCTIONS OR PAYMENT DISCREPANCIES

2.1.136 1 MB 0.360 63359S11.XRX

VWRSTMT

UNIVAR

P.O. BOX 34325
SEATTLE, WA 98124-1325

www.univarusa.com

ORIGINAL INVOICE

UNIVAR CINCINNATI
4600 DUES DRIVE
CINCINNATI OH 45246
513-714-5264

Page 1 OF 2

Received
OCT 29 2007
SSC-Mailroom

2.1.159 1 MB 0.360 62236S11.XRX
590994
KENTUCKY AMERICAN WATER
PO BOX 5610
CHERRY HILL NJ 08034-0510

CUST. NO./SHIP TO

590994 001
OWENTON WATER PLANT
220 WATER PLANT LANE
OWENTON KY 40359

17 0/0/65

INVOICE NO.	INV. DATE	ORDER NO.	CUSTOMER P.O. NUMBER	FREIGHT TERMS	FOB
CI-924864	10/17/07	649358	15092681	PREPAID (HDR FRT - TL	DELIVERED
				WAREHOUSE LOCATION: ST LOUIS	ON TIME DELIVERY: SAIA MOTOR FREIGHT LINE
SHIP DATE: 10/17/07	TAX EXEMPT NO.: 040590.X	SALES REP: CHARLIE MILLER		SALES DEPARTMENT: INDUSTRIAL CHEMICAL	ENTERED BY: DEEDEE HERSHEY

PRODUCT DESCRIPTION	TAX	QUANTITY ORDERED	QUANTITY SHIPPED B.O.	BILLING QTY./UNIT PRICE	EXTENDED AMOUNT
642346 HYDRODARCO B 40 LB BG ACTIVATED CARBON DOMESTIC AM NORIT TECH POWDR BAG LOT #: 866567	N	50.00 BG	50.00 BG	2000.00 0.6500 LB	1300.00
268160 COMMON CARRIER FREIGHT 1 EA EA DELIVERED SPCL CHG **** **** NA	N	1.00 EA	1.00 EA	1.00 0.0000 EA	0.00

****
* RECENT RISING FUEL COSTS HAVE MADE IT NECESSARY FOR *
* US TO ADD A TEMPORARY FUEL SURCHARGE TO *
* EACH DELIVERY. THIS ISEFFECTIVE MARCH 1, 2000. WE *
* WILL CONTINUE TO MONITOR THE SITUATION AND ADJUST AS *
* CIRCUMSTANCES DICTATE. WE APPRECIATE YOUR *
* UNDERSTANDING AND VALUEYOUR BUSINESS. *
****

Need rec Doz
A12 SUPV05

==========
PLS SHIP 10.17 VIA SAIA FOR DELY BY 10.19
3RD PARTY BILL FRT TO UNIVAR CINTI
==========

Univar USA Inc.

Remittance addresses have been updated.

Please confirm your system address conforms to the invoice Remit-To address.

Buyer agrees that all orders or purchases are subject to Univar's Standard Terms and Conditions of Sale as of the date of shipment available at www.univarusa.com/salesterms. All sales and orders are expressly limited to such terms, which may be updated from time to time. No other terms and conditions apply to any purchase or order unless agreed to in writing by both parties.

PLEASE DETACH HERE AND RETURN BOTTOM PORTION WITH YOUR PAYMENT

UNIVAR

CUST. NO./SHIP TO

INVOICE NO.	INVOICE DATE	AMOUNT DUE	AMOUNT PAID
CI-924864	10/17/07	CONTINUED	

590994
KENTUCKY AMERICAN WATER
PO BOX 5610
CHERRY HILL NJ 08034-0510

REMIT TO

UNIVAR USA INC
13009 COLLECTIONS CTR DR
CHICAGO IL 60693

PLEASE USE REVERSE SIDE FOR DETAILING DEDUCTIONS OR PAYMENT DISCREPANCIES

YWRSTMT

UNIVAR
P.O. BOX 34325
SEATTLE, WA 98124-1325
www.univarusa.com

ORIGINAL INVOICE

UNIVAR CINCINNATI
4600 DUES DRIVE
CINCINNATI OH 45246
513-714-5264

590994
KENTUCKY AMERICAN WATER
PO BOX 5610
CHERRY HILL NJ 08034-0510

CUST. NO./SHIP TO

590994 001
OWENTON WATER PLANT
220 WATER PLANT LANE
OWENTON KY 40359

INVOICE NO.	INV. DATE	ORDER NO.	CUSTOMER P.O. NUMBER	FREIGHT TERMS	FOB
CI-924864	10/17/07	649358	15092681	PREPAID (HDR FRT -	DELIVERED
				WAREHOUSE LOCATION: ST LOUIS	ON TIME DELIVERY: SAIA MOTOR FREIGHT LINE
SHIP DATE: 10/17/07	TAX EXEMPT NO.: 040590.X	SALES REP.: CHARLIE MILLER		SALES DEPARTMENT: INDUSTRIAL CHEMICAL	ENTERED BY: DEEDEE HERSHEY

PRODUCT DESCRIPTION	TAX	QUANTITY ORDERED	QUANTITY SHIPPED B.O.	BILLING QTY/ UNIT PRICE	EXTENDED AMOUNT
				MERCHANDISE:	1300.00
TERMS: NET 30				INVOICE TOTAL:	1300.00

Univar USA Inc.

Remittance addresses have been updated.

Please confirm your system address conforms to the invoice Remit-To address.

Buyer agrees that all orders or purchases are subject to Univar's Standard Terms and Conditions of Sale as of the date of shipment available at www.univarusa.com/salesterms. All sales and orders are expressly limited to such terms, which may be updated from time to time. No other terms and conditions apply to any purchase or order unless agreed to in writing by both parties.

PLEASE DETACH HERE AND RETURN BOTTOM PORTION WITH YOUR PAYMENT

UNIVAR

CUST. NO./SHIP TO

INVOICE NO.	INVOICE DATE	AMOUNT DUE	AMOUNT PAID
CI-924864	10/17/07	1300.00	

590994
KENTUCKY AMERICAN WATER
PO BOX 5610
CHERRY HILL NJ 08034-0510

REMIT TO

UNIVAR USA INC
13009 COLLECTIONS CTR DR
CHICAGO IL 60693

PLEASE USE REVERSE SIDE FOR DETAILING DEDUCTIONS OR PAYMENT DISCREPANCIES

UNIVAR
P.O. BOX 34325
SEATTLE, WA 98124-1325
www.univarusa.com

ORIGINAL INVOICE

UNIVAR CINCINNATI
4600 DUES DRIVE
CINCINNATI OH 45246
513-714-5264

Page 1 OF 1

17010165
TR

CUST. NO./SHIP TO

590994 001
OWENTON WATER PLANT
220 WATER PLANT LANE
OWENTON KY 40359

2,1,173 1 MB 0.360 60471S11,XRX
590994
KENTUCKY AMERICAN WATER
PO BOX 5610
CHERRY HILL NJ 08034-0510

INVOICE NO	INV DATE	ORDER NO	CUSTOMER P.O. NUMBER	FREIGHT TERMS	FOB
CI-920836	09/26/07	645149	15092681	PREPAID (HDR FRT -	DELIVERED
SHIP DATE	TAX EXEMPT NO	SALES REP	WAREHOUSE LOCATION	ON TIME DELIVERY	
09/26/07	040590.X	CHARLIE MILLER	CINCINNATI	UNIVAR USA INC.	
			SALES DEPARTMENT	ENTERED BY	
			INDUSTRIAL CHEMICAL	SHELLEY STEVENS	

PRODUCT DESCRIPTION	TAX	QUANTITY ORDERED	QUANTITY SHIPPED B.O.	BILLING QTY/ UNIT PRICE	EXTENDED AMOUNT
642346 HYDRODARCO B 40 LB BG ACTIVATED CARBON DOMESTIC AM NORIT TECH POWDR BAG LOT #: 857817	N	50.00 BG	50.00 BG	2000.00 0.6500 LB	1300.00
644207 UNIVAR PACKAGE DELIVERY 1 EA EA CHARGE SPCL CHG **** **** NA	N	1.00 EA	1.00 EA	1.00 0.0000 EA	0.00

****
* RECENT RISING FUEL COSTS HAVE MADE IT NECESSARY FOR *
* US TO ADD A TEMPORARY FUEL SURCHARGE TO *
* EACH DELIVERY. THIS ISEFFECTIVE MARCH 1, 2000. WE *
* WILL CONTINUE TO MONITOR THE SITUATION AND ADJUST AS *
* CIRCUMSTANCES DICTATE. WE APPRECIATE YOUR *
* UNDERSTANDING AND VALUEYOUR BUSINESS. *
****

OCT 1 2007

Rec
10206504

MERCHANDISE: 1300.00
INVOICE TOTAL: 1300.00

TERMS: NET 30

Remittance addresses have been updated.
Please confirm your system address conforms to the invoice Remit-To address.

Buyer agrees that all orders or purchases are subject to Univar's Standard Terms and Conditions of Sale as of the date of shipment available at www.univarusa.com/salesterms. All sales and orders are expressly limited to such terms, which may be updated from time to time. No other terms and conditions apply to any purchase or order unless agreed to in writing by both parties.

PLEASE DETACH HERE AND RETURN BOTTOM PORTION WITH YOUR PAYMENT

UNIVAR

CUST. NO./SHIP TO

INVOICE NO	INVOICE DATE	AMOUNT DUE	AMOUNT PAID
CI-920836	09/26/07	1300.00	

590994
KENTUCKY AMERICAN WATER
PO BOX 5610
CHERRY HILL NJ 08034-0510

REMIT TO

UNIVAR USA INC
13009 COLLECTIONS CTR DR
CHICAGO IL 60693

PLEASE USE REVERSE SIDE FOR DETAILING DEDUCTIONS OR PAYMENT DISCREPANCIES

VWRSTNT

UNIVAR

P.O. BOX 34325
SEATTLE, WA 98124-1325

www.univarusa.com

ORIGINAL INVOICE

UNIVAR CINCINNATI
4600 DUES DRIVE
CINCINNATI OH 45246
513-714-5264

1701065

CUST. NO./SHIP TO

2,1,135 1 MB 0.360 59398S11.XRX
590994
KENTUCKY AMERICAN WATER
PO BOX 5610
CHERRY HILL NJ 08034-0510

590994 001
OWENTON WATER PLANT
220 WATER PLANT LANE
OWENTON KY 40359

INVOICE NO	INV DATE	ORDER NO.	CUSTOMER P.O. NUMBER
CI-917684	09/07/07	641216	15092681

SHIP DATE	TAX EXEMPT NO.	SALES REP
09/07/07	040590.X	CHARLIE MILLER

FREIGHT TERMS	FOB
PREPAID (HDR FRT -	DELIVERED
WAREHOUSE LOCATION	ON TIME DELIVERY
CINCINNATI	UNIVAR USA INC.
SALES DEPARTMENT	ENTERED BY
INDUSTRIAL CHEMICAL	SHELLEY STEVENS

PRODUCT DESCRIPTION	TAX	QUANTITY ORDERED	QUANTITY SHIPPED B.O.	BILLING QTY./ UNIT PRICE	EXTENDED AMOUNT
642346 HYDRODARCO B 40 LB BG ACTIVATED CARBON DOMESTIC AM NORIT TECH POWDR BAG LOT #: 864897	N	50.00 BG	50.00 BG	2000.00 0.6500 LB	1300.00
644207 UNIVAR PACKAGE DELIVERY 1 EA EA CHARGE SPCL CHG **** **** NA	N	1.00 EA	1.00 EA	1.00 0.0000 EA	0.00

****
* RECENT RISING FUEL COSTS HAVE MADE IT NECESSARY FOR *
* US TO ADD A TEMPORARY FUEL SURCHARGE TO *
* EACH DELIVERY. THIS ISEFFECTIVE MARCH 1, 2000. WE *
* WILL CONTINUE TO MONITOR THE SITUATION AND ADJUST AS *
* CIRCUMSTANCES DICTATE. WE APPRECIATE YOUR *
* UNDERSTANDING AND VALUEYOUR BUSINESS. *
****

Rec 10204238

SEP 18 2007

TERMS: NET 30

MERCHANDISE: 1300.00
INVOICE TOTAL: 1300.00

Buyer agrees that all orders or purchases are subject to Univar's Standard Terms and Conditions of Sale as of the date of shipment available at www.univarusa.com/salesterms. All sales and orders are expressly limited to such terms which may be updated from time to time. No other terms and conditions apply to any purchase or order unless agreed to in writing by both parties.

PLEASE DETACH HERE AND RETURN BOTTOM PORTION WITH YOUR PAYMENT

UNIVAR

CUST. NO./SHIP TO

INVOICE NO	INVOICE DATE	AMOUNT DUE	AMOUNT PAID
CI-917684	09/07/07	1300.00	

590994
KENTUCKY AMERICAN WATER
PO BOX 5610
CHERRY HILL NJ 08034-0510

REMIT TO

UNIVAR USA INC
13009 COLLECTIONS CTR DR
CHICAGO IL 60693

PLEASE USE REVERSE SIDE FOR DETAILING DEDUCTIONS OR PAYMENT DISCREPANCIES

VWRSTMT

UNIVAR

P.O. BOX 34325
SEATTLE, WA 98124-1325

www.univarusa.com

ORIGINAL INVOICE

UNIVAR CINCINNATI
4600 DUES DRIVE
CINCINNATI OH 45246
513-714-5264

Page 1 OF 1

28017423 mse
10200573 Dr

2,1,156 1 MB 0.360 57357S11,XRX
590994
KENTUCKY AMERICAN WATER
PO BOX 5610
CHERRY HILL NJ 08034-0510

CUST. NO./SHIP TO

590994 001
OWENTON WATER PLANT
220 WATER PLANT LANE
OWENTON KY 40359

INVOICE NO	INV. DATE	ORDER NO	CUSTOMER P.O. NUMBER	FREIGHT TERMS	FOB
CI-912446	08/06/07	636194	15092681	PREPAID (HDR FRT -	DELIVERED
				WAREHOUSE LOCATION: CINCINNATI	ON TIME DELIVERY: UNIVAR USA INC.
SHIP DATE: 08/06/07	TAX EXEMPT NO: 040590.X	SALES REP: CHARLIE MILLER		SALES DEPARTMENT: INDUSTRIAL CHEMICAL	ENTERED BY: SHELLEY STEVENS

PRODUCT DESCRIPTION	TAX	QUANTITY ORDERED	QUANTITY SHIPPED B.O.	BILLING QTY/ UNIT PRICE	EXTENDED AMOUNT
642346 HYDRODARCO B 40 LB BG ACTIVATED CARBON DOMESTIC AM NORIT TECH POWDR BAG LOT #: 861687	N	40.00 BG	50.00 BG	2000.00 0.6000 LB	1200.00
644207 UNIVAR PACKAGE DELIVERY 1 EA EA CHARGE SPCL CHG **** **** NA	N	1.00 EA	1.00 EA	1.00 0.0000 EA	0.00

****
* RECENT RISING FUEL COSTS HAVE MADE IT NECESSARY FOR *
* US TO ADD A TEMPORARY FUEL SURCHARGE TO *
* EACH DELIVERY. THIS ISEFFECTIVE MARCH 1, 2000. WE *
* WILL CONTINUE TO MONITOR THE SITUATION AND ADJUST AS *
* CIRCUMSTANCES DICTATE. WE APPRECIATE YOUR *
* UNDERSTANDING AND VALUEYOUR BUSINESS. *
****

AUG 13 2007

MERCHANDISE: 1200.00

TERMS: NET 30

INVOICE TOTAL: 1200.00

Buyer agrees that all orders or purchases are subject to Univar's Standard Terms and Conditions of Sale as of the date of shipment available at www.univarusa.com/salesterms. All sales and orders are expressly limited to such terms, which may be updated from time to time. No other terms and conditions apply to any purchase or order unless agreed to in writing by both parties.

PLEASE DETACH HERE AND RETURN BOTTOM PORTION WITH YOUR PAYMENT

UNIVAR

CUST. NO./SHIP TO

INVOICE NO	INVOICE DATE	AMOUNT DUE	AMOUNT PAID
CI-912446	08/06/07	1200.00	

590994
KENTUCKY AMERICAN WATER
PO BOX 5610
CHERRY HILL NJ 08034-0510

REMIT TO

UNIVAR USA INC
13009 COLLECTIONS CTR DR
CHICAGO IL 60693

PLEASE USE REVERSE SIDE FOR DETAILING DEDUCTIONS OR PAYMENT DISCREPANCIES

UNIVAR

P.O. BOX 34325
SEATTLE, WA 98124-1325

www.univarusa.com

ORIGINAL INVOICE

UNIVAR CINCINNATI
4600 DUES DRIVE
CINCINNATI OH 45246
513-714-5264

1701016 5

2.1.146 1 MB 0.360 55494S11.XRX
590994
KENTUCKY AMERICAN WATER
PO BOX 5610
CHERRY HILL NJ 08034-0510

CUST. NO./SHIP TO

590994 001
OWENTON WATER PLANT
220 WATER PLANT LANE
OWENTON KY 40359

INVOICE NO	INV DATE	ORDER NO	CUSTOMER P.O. NUMBER	FREIGHT TERMS	FOB
CI-908988	07/16/07	632289	15092681	PREPAID (HDR FRT -	DELIVERED
SHIP DATE	TAX EXEMPT NO.	SALES REP	WAREHOUSE LOCATION	ON TIME DELIVERY	
07/16/07	040590.X	CHARLIE MILLER	CINCINNATI	UNIVAR USA INC.	
			SALES DEPARTMENT	ENTERED BY	
			INDUSTRIAL CHEMICAL	SHELLEY STEVENS	

PRODUCT DESCRIPTION	TAX	QUANTITY ORDERED	QUANTITY SHIPPED B.O.	BILLING QTY/ UNIT PRICE	EXTENDED AMOUNT
642346 HYDRODARCO B 40 LB BG ACTIVATED CARBON DOMESTIC AM NORIT TECH POWDR BAG LOT #: 862337	N	30.00 BG	30.00 BG	1200.00 0.6000 LB	720.00
644207 UNIVAR PACKAGE DELIVERY 1 EA EA CHARGE SPCL CHG **** **** NA	N	1.00 EA	1.00 EA	1.00 0.0000 EA	0.00
**********					
* RECENT RISING FUEL COSTS HAVE MADE IT NECESSARY FOR *					
* US TO ADD A TEMPORARY FUEL SURCHARGE TO *					
* EACH DELIVERY. THIS ISEFFECTIVE MARCH 1, 2000. WE *					
* WILL CONTINUE TO MONITOR THE SITUATION AND ADJUST AS *					
* CIRCUMSTANCES DICTATE. WE APPRECIATE YOUR *					
* UNDERSTANDING AND VALUEYOUR BUSINESS. *					
**********					
. 10198138					
			MERCHANDISE:		720.00
TERMS: NET 30			INVOICE TOTAL:		720.00

Buyer agrees that all orders or purchases are subject to Univar's Standard Terms and Conditions of Sale as of the date of shipment available at www.univarusa.com/salesterms. All sales and orders are expressly limited to such terms, which may be updated from time to time. No other terms and conditions apply to any purchase or order unless agreed to in writing by both parties.

PLEASE DETACH HERE AND RETURN BOTTOM PORTION WITH YOUR PAYMENT

UNIVAR

CUST. NO./SHIP TO

INVOICE NO	INVOICE DATE	AMOUNT DUE	AMOUNT PAID
CI-908988	07/16/07	720.00	

590994
KENTUCKY AMERICAN WATER
PO BOX 5610
CHERRY HILL NJ 08034-0510

REMIT TO

UNIVAR USA INC
13009 COLLECTIONS CTR DR
CHICAGO IL 60693

PLEASE USE REVERSE SIDE FOR DETAILING DEDUCTIONS OR PAYMENT DISCREPANCIES

UNIVAR

P.O. BOX 34325
SEATTLE, WA 98124-1325

www.univarusa.com

ORIGINAL INVOICE

UNIVAR CINCINNATI
4600 DUES DRIVE
CINCINNATI OH 45246
513-714-5264

Page 1 OF 1

17010165 mbe

590994
KENTUCKY AMERICAN WATER
PO BOX 5610
CHERRY HILL NJ 08034-0510

10196630V

CUST. NO./SHIP TO

590994 001
OWENTON WATER PLANT
220 WATER PLANT LANE
OWENTON KY 40359

INVOICE NO	INV. DATE	ORDER NO.	CUSTOMER P.O. NUMBER	FREIGHT TERMS	FOB
CI-907286	07/05/07	630391	15092681	PREPAID (HDR FRT -	DELIVERED
SHIP DATE	TAX EXEMPT NO.	SALES REP.	WAREHOUSE LOCATION	ON TIME DELIVERY	
07/05/07	040590.X	CHARLIE MILLER	CINCINNATI	UNIVAR USA INC.	
			SALES DEPARTMENT	ENTERED BY	
			INDUSTRIAL CHEMICAL	SHELLEY STEVENS	

PRODUCT DESCRIPTION	TAX	QUANTITY ORDERED	QUANTITY SHIPPED B.O.	BILLING QTY./ UNIT PRICE	EXTENDED AMOUNT
642346 HYDRODARCO B 40 LB BG ACTIVATED CARBON DOMESTIC AM NORIT TECH POWDR BAG LOT #: 855567	N	20.00 BG	20.00 BG	800.00 0.6000 LB	480.00
644207 UNIVAR PACKAGE DELIVERY 1 EA EA CHARGE SPCL CHG **** **** NA	N	1.00 EA	1.00 EA	1.00 0.0000 EA	0.00
********** RECENT RISING FUEL COSTS HAVE MADE IT NECESSARY FOR US TO ADD A TEMPORARY FUEL SURCHARGE TO EACH DELIVERY. THIS ISEFFECTIVE MARCH 1, 2000. WE WILL CONTINUE TO MONITOR THE SITUATION AND ADJUST AS CIRCUMSTANCES DICTATE. WE APPRECIATE YOUR UNDERSTANDING AND VALUEYOUR BUSINESS. **********					
TERMS: NET 30				MERCHANDISE:	480.00
				INVOICE TOTAL:	480.00

Buyer agrees that all orders or purchases are subject to Univar's Standard Terms and Conditions of Sale as of the date of shipment available at www.univarusa.com/salesterms. All sales and orders are expressly limited to such terms, which may be updated from time to time. No other terms and conditions apply to any purchase or order unless agreed to in writing by both parties.

PLEASE DETACH HERE AND RETURN BOTTOM PORTION WITH YOUR PAYMENT

UNIVAR

CUST. NO./SHIP TO

INVOICE NO	INVOICE DATE	AMOUNT DUE	AMOUNT PAID
CI-907286	07/05/07	480.00	

590994
KENTUCKY AMERICAN WATER
PO BOX 5610
CHERRY HILL NJ 08034-0510

REMIT TO

UNIVAR USA INC
13009 COLLECTIONS CTR DR
CHICAGO IL 60693

PLEASE USE REVERSE SIDE FOR DETAILING DEDUCTIONS OR PAYMENT DISCREPANCIES

2.1.142 1 MB 0.360 54693S11.XRX

UNIVAR

P.O. BOX 34325
SEATTLE, WA 98124-1325

www.univarusa.com

ORIGINAL INVOICE

UNIVAR CINCINNATI
4600 DUES DRIVE
CINCINNATI OH 45246
513-714-5264

Page 1 OF 1

1701o165

Received
JUN 22 2007
SSC-Mailroom

2.1.134 1 MB 0.360 53225S11.XRX
590994
KENTUCKY AMERICAN WATER
PO BOX 5610
CHERRY HILL NJ 08034-0510

CUST. NO./SHIP TO

590994 001
OWENTON WATER PLANT
220 WATER PLANT LANE
OWENTON KY 40359

CI903733 6/13/07 15092681

INVOICE NO.	INV. DATE	ORDER NO.	CUSTOMER P.O. NUMBER
CI-903733	06/13/07	625744	~~15092687~~

FREIGHT TERMS	FOB
PREPAID (HDR FRT -	DELIVERED

SHIP DATE	TAX EXEMPT NO.	SALES REP.	WAREHOUSE LOCATION	ON TIME DELIVERY
06/13/07	040590.X	CHARLIE MILLER	CINCINNATI	UNIVAR USA INC.

SALES DEPARTMENT	ENTERED BY
INDUSTRIAL CHEMICAL	SHELLEY STEVENS

PRODUCT DESCRIPTION	TAX	QUANTITY ORDERED	QUANTITY SHIPPED B.O.	BILLING QTY./ UNIT PRICE	EXTENDED AMOUNT
642346 HYDRODARCO B 40 LB BG ACTIVATED CARBON DOMESTIC -AM-NORIT--TECH----POWDR-BAG- LOT #: 860187	N	47.00 BG	47.00 BG	1880.00 0.6000 LB	1128.00
644207 UNIVAR PACKAGE DELIVERY 1 EA EA CHARGE SPCL CHG **** **** NA	N	1.00 EA	1.00 EA	1.00 0.0000 EA	0.00

****
* RECENT RISING FUEL COSTS HAVE MADE IT NECESSARY FOR *
* US TO ADD A TEMPORARY FUEL SURCHARGE TO *
* EACH DELIVERY. THIS ISEFFECTIVE MARCH 1, 2000. WE *
* WILL CONTINUE TO MONITOR THE SITUATION AND ADJUST AS *
* CIRCUMSTANCES DICTATE. WE APPRECIATE YOUR *
* UNDERSTANDING AND VALUEYOUR BUSINESS. *
****

10195080 CV

Univar USA Inc.

TERMS: NET 30

MERCHANDISE: 1128.00
INVOICE TOTAL: 1128.00

Buyer agrees that all orders or purchases are subject to Univar's Standard Terms and Conditions of Sale as of the date of shipment available at www.univarusa.com/salesterms. All sales and orders are expressly limited to such terms, which may be updated from time to time. No other terms and conditions apply to any purchase or order unless agreed to in writing by both parties.

PLEASE DETACH HERE AND RETURN BOTTOM PORTION WITH YOUR PAYMENT

UNIVAR

CUST. NO./SHIP TO

INVOICE NO.	INVOICE DATE	AMOUNT DUE	AMOUNT PAID
CI-903733	06/13/07	1128.00	

590994
KENTUCKY AMERICAN WATER
PO BOX 5610
CHERRY HILL NJ 08034-0510

REMIT TO

UNIVAR USA INC
13009 COLLECTIONS CTR DR
CHICAGO IL 60693

PLEASE USE REVERSE SIDE FOR DETAILING DEDUCTIONS OR PAYMENT DISCREPANCIES

UNIVAR

P.O. BOX 34325
SEATTLE, WA 98124-1325

www.univarusa.com

ORIGINAL INVOICE

17010165

Received
MAY 30 2007
SSC-Mailroom

UNIVAR CINCINNATI
4600 DUES DRIVE
CINCINNATI OH 45246
513-714-5264

2.1.142 1 MB 0.360 51302S11.XRX
590994
KENTUCKY AMERICAN WATER
PO BOX 5610
CHERRY HILL NJ 08034-0510

CUST. NO./SHIP TO

590994 001
OWENTON WATER PLANT
220 WATER PLANT LANE
OWENTON KY 40359

CI899113 5/16/07 1509268

INVOICE NO.	INV. DATE	ORDER NO.	CUSTOMER P.O. NUMBER	FREIGHT TERMS	FOB
CI-899113	05/16/07	621095	~~15090681~~ 1509268	PREPAID (HDR FRT -	DELIVERED
SHIP DATE	**TAX EXEMPT NO.**	**SALES REP.**		**WAREHOUSE LOCATION**	**ON TIME DELIVERY**
05/16/07	040590.X	CHARLIE MILLER		CINCINNATI	UNIVAR USA INC.
				SALES DEPARTMENT	**ENTERED BY**
				INDUSTRIAL CHEMICAL	SHELLEY STEVENS

PRODUCT DESCRIPTION	TAX	QUANTITY ORDERED	QUANTITY SHIPPED B.O.	BILLING QTY./ UNIT PRICE	EXTENDED AMOUNT
642346 HYDRODARCO B 40 LB BG ACTIVATED CARBON DOMESTIC AM NORIT TECH POWDR BAG LOT #: 858717	N	50.00 BG	50.00 BG	2000.00 0.6000 LB	1200.00
644207 UNIVAR PACKAGE DELIVERY 1 EA EA CHARGE SPCL CHG **** **** NA	N	1.00 EA	1.00 EA	1.00 0.0000 EA	0.00

****
* RECENT RISING FUEL COSTS HAVE MADE IT NECESSARY FOR *
* US TO ADD A TEMPORARY FUEL SURCHARGE TO *
* EACH DELIVERY. THIS ISEFFECTIVE MARCH 1, 2000. WE *
* WILL CONTINUE TO MONITOR THE SITUATION AND ADJUST AS *
* CIRCUMSTANCES DICTATE. WE APPRECIATE YOUR *
* UNDERSTANDING AND VALUEYOUR BUSINESS. *
****

1019182 OV

Univar USA Inc.

TERMS: NET 30

MERCHANDISE: 1200.00
INVOICE TOTAL: 1200.00

Buyer agrees that all orders or purchases are subject to Univar's Standard Terms and Conditions of Sale as of the date of shipment available at www.univarusa.com/salesterms. All sales and orders are expressly limited to such terms, which may be updated from time to time. No other terms and conditions apply to any purchase or order unless agreed to in writing by both parties.

PLEASE DETACH HERE AND RETURN BOTTOM PORTION WITH YOUR PAYMENT

UNIVAR

CUST. NO./SHIP TO

INVOICE NO.	INVOICE DATE	AMOUNT DUE	AMOUNT PAID
CI-899113	05/16/07	1200.00	

590994
KENTUCKY AMERICAN WATER
PO BOX 5610
CHERRY HILL NJ 08034-0510

REMIT TO

UNIVAR USA INC
13009 COLLECTIONS CTR DR
CHICAGO IL 60693

PLEASE USE REVERSE SIDE FOR DETAILING DEDUCTIONS OR PAYMENT DISCREPANCIES

VWRITMT

UNIVAR

PO BOX 34325
SEATTLE WA 98124-1325

www.univarusa.com

ORIGINAL INVOICE

UNIVAR CINCINNATI
4600 DUES DRIVE
CINCINNATI OH 45246
513-714-5264

Page 1 OF 1

17010165
SX

Received
MAY 04 2007
SSC-Mailroom

2 1 142 1 MB 0 326 97321S11 XRX
590994
KENTUCKY AMERICAN WATER
PO BOX 5610
CHERRY HILL NJ 08034-0510

CUST NO /SHIP TO

590994 001
OWENTON WATER PLANT
220 WATER PLANT LANE
OWENTON KY 40359

CI895768 4/25/07

INVOICE NO	INV DATE	ORDER NO	CUSTOMER P.O. NUMBER	FREIGHT TERMS	FOB
CI 895768	04/25/07	616227	15092681 15092681	PREPAID (HDR FRT	DELIVERED
SHIP DATE	TAX EXEMPT NO	SALES REP		WAREHOUSE LOCATION	ON TIME DELIVERY
04/25/07		CHARLIE MILLER		CINCINNATI	UNIVAR USA INC
				SALES DEPARTMENT	ENTERED BY
				INDUSTRIAL CHEMICAL	SHELLEY STEVENS

PRODUCT DESCRIPTION	TAX	QUANTITY ORDERED	QUANTITY SHIPPED B O	BILLING QTY/ UNIT PRICE	EXTENDED AMOUNT
642346 HYDRODARCO B 40 LB BG ACTIVATED CARBON DOMESTIC AM NORIT TECH POWDR BAG LOT # 847296	Y	10 00 BG	10 00 BG	400 00 0 6000 LB	240 00
644207 UNIVAR PACKAGE DELIVERY 1 EA EA CHARGE SPCL CHG **** **** NA	Y	1 00 EA	1 00 EA	1 00 0 0000 EA	0 00

****
* RECENT RISING FUEL COSTS HAVE MADE IT NECESSARY FOR *
* US TO ADD A TEMPORARY FUEL SURCHARGE TO *
* EACH DELIVERY THIS ISEFFECTIVE MARCH 1, 2000 WE *
* WILL CONTINUE TO MONITOR THE SITUATION AND ADJUST AS *
* CIRCUMSTANCES DICTATE WE APPRECIATE YOUR *
* UNDERSTANDING AND VALUEYOUR BUSINESS *
****

10189634 OV

MERCHANDISE	240 00
SALES TAX	14 40
INVOICE TOTAL	254 40

TERMS NET 30

Buyer agrees that all orders or purchases are subject to Univar's Standard Terms and Conditions of Sale as of the date of shipment available at www.univarusa.com/salesterms. All sales and orders are expressly limited to such terms which may be updated from time to time. No other terms and conditions apply to any purchase or order unless agreed to in writing by both parties.

PLEASE DETACH HERE AND RETURN BOTTOM PORTION WITH YOUR PAYMENT

UNIVAR

CUST NO /SHIP TO

INVOICE NO	INVOICE DATE	AMOUNT DUE	AMOUNT PAID
CI-895768	04/25/07	254 40	

590994
KENTUCKY AMERICAN WATER
PO BOX 5610
CHERRY HILL NJ 08034-0510

REMIT TO

UNIVAR USA INC
13009 COLLECTIONS CTR DR
CHICAGO IL 60693

PLEASE USE REVERSE SIDE FOR DETAILING DEDUCTIONS OR PAYMENT DISCREPANCIES

UNIVAR

PO BOX 34325
SEATTLE WA 98124-1325

www.univarusa.com

ORIGINAL INVOICE

UNIVAR CINCINNATI
4600 DUES DRIVE
CINCINNATI OH 45246
513-714-5264

Page 1 OF 1

17|01|65 SX RP

590994
KENTUCKY AMERICAN WATER
PO BOX 5610
CHERRY HILL NJ 08034-0510

Received
APR 20 2007
SSC-Mailroom

CUST NO /SHIP TO
590994 001
OWENTON WATER PLANT
220 WATER PLANT LANE
OWENTON KY 40359

CI893396 4/11/07

INVOICE NO	INV DATE	ORDER NO	CUSTOMER PO NUMBER	FREIGHT TERMS	FOB
CI-893396	04/11/07	615386	15092681 15092681	PREPAID (HDR FRT	DELIVERED
SHIP DATE	TAX EXEMPT NO	SALES REP		WAREHOUSE LOCATION	ON TIME DELIVERY
04/11/07		CHARLIE MILLER		CINCINNATI	UNIVAR USA INC
				SALES DEPARTMENT	ENTERED BY
				INDUSTRIAL CHEMICAL	SHELLEY STEVENS

PRODUCT DESCRIPTION	TAX	QUANTITY ORDERED	QUANTITY SHIPPED B O	BILLING QTY/ UNIT PRICE	EXTENDED AMOUNT
642346 HYDRODARCO B 40 LB BG ACTIVATED CARBON DOMESTIC AM NORIT TECH POWDR BAG LOT # 849856	Y	25 00 BG	20 00 BG	800 00 0 6000 LB	480 00
644207 UNIVAR PACKAGE DELIVERY 1 EA EA CHARGE SPCL CHG **** **** NA	Y	1 00 EA	1 00 EA	1.00 0 0000 EA	0 00
**********					
* RECENT RISING FUEL COSTS HAVE MADE IT NECESSARY FOR *					
* US TO ADD A TEMPORARY FUEL SURCHARGE TO *					
* EACH DELIVERY THIS ISEFFECTIVE MARCH 1, 2000 WE *					
* WILL CONTINUE TO MONITOR THE SITUATION AND ADJUST AS *					
* CIRCUMSTANCES DICTATE WE APPRECIATE YOUR *					
* UNDERSTANDING AND VALUEYOUR BUSINESS *					
**********					
10188089 OV					
TERMS NET 30			MERCHANDISE		480 00
			SALES TAX		28 80
			INVOICE TOTAL		508 80

Buyer agrees that all orders or purchases are subject to Univar's Standard Terms and Conditions of Sale as of the date of shipment a a labe at www.univarusa.com/salesterms All sales and orders are expressly l m ted to such terms which may be updated from time to time No other terms and conditions apply to any purchase or order unless agreed to in writing by both parties

PLEASE DETACH HERE AND RETURN BOTTOM PORTION WITH YOUR PAYMENT

UNIVAR

CUST NO /SHIP TO

INVOICE NO	INVOICE DATE	AMOUNT DUE	AMOUNT PAID
CI-893396	04/11/07	508 80	

590994
KENTUCKY AMERICAN WATER
PO BOX 5610
CHERRY HILL NJ 08034-0510

REMIT TO

UNIVAR USA INC
13009 COLLECTIONS CTR DR
CHICAGO IL 60693

PLEASE USE REVERSE SIDE FOR DETAILING DEDUCTIONS OR PAYMENT DISCREPANCIES

2 1 145 1 MB 0 326 96385S11 XRX

UNIVAR

P O BOX 34325
SEATTLE WA 98124-1325

www univarusa com

ORIGINAL INVOICE

UNIVAR CINCINNATI
4600 DUES DRIVE
CINCINNATI OH 45246
513-714-5264

Page 1 OF 1

590994
KENTUCKY AMERICAN WATER
PO BOX 5610
CHERRY HILL NJ 08034-0510

17010165 SX

CUST NO /SHIP TO

590994 001
OWENTON WATER PLANT
220 WATER PLANT LANE
OWENTON KY 40359

CI 887939 3/7/07

INVOICE NO	INV DATE	ORDER NO	CUSTOMER P O NUMBER
CI 887939	03/07/07	609694	15092681 15092681

SHIP DATE	TAX EXEMPT NO	SALES REP
03/07/07		CHARLIE MILLER

FREIGHT TERMS	FOB
PREPAID (HDR FRT	DELIVERED
WAREHOUSE LOCATION	ON TIME DELIVERY
CINCINNATI	UNIVAR USA INC
SALES DEPARTMENT	ENTERED BY
NDUSTRIAL CHEMICAL	DEEDEE HERSHEY

PRODUCT DESCRIPTION	TAX	QUANTITY ORDERED	QUANTITY SHIPPED B O	BILLING QTY/ UNIT PRICE	EXTENDED AMOUNT
642346 HYDRODARCO B 40 LB BG ACTIVATED CARBON DOMESTIC AM NORIT TECH POWDR BAG LOT # 855377	Y	20 00 BG	20 00 BG	800 00 0 6000 LB	480 00
644207 UNIVAR PACKAGE DELIVERY 1 EA EA CHARGE SPCL CHG **** **** NA	Y	1 00 EA	1 00 EA	1 00 0 0000 EA	0 00

****
* RECENT RISING FUEL COSTS HAVE MADE IT NECESSARY FOR *
* US TO ADD A TEMPORARY FUEL SURCHARGE TO *
* EACH DELIVERY THIS ISEFFECTIVE MARCH 1, 2000 WE *
* WILL CONTINUE TO MONITOR THE SITUATION AND ADJUST AS *
* CIRCUMSTANCES DICTATE WE APPRECIATE YOUR *
* UNDERSTANDING AND VALUEYOUR BUSINESS *
****

10184863 OV

TERMS NET 30

MERCHANDISE	480 00
SALES TAX	28 80
INVOICE TOTAL	508 80

Buyer agrees that all o ders or purchases are subject to Univar's Standard Terms and Conditions of Sale s of the date of shipment a ailable at www univarusa com/salesterms All sales and orders are expressly limited to such terms which may be updated from t me to time No other terms and conditions apply to any purchase or order u less agreed to n writing by both parties

PLEASE DETACH HERE AND RETURN BOTTOM PORTION WITH YOUR PAYMENT

UNIVAR

CUST NO /SHIP TO

INVOICE NO	INVOICE DATE	AMOUNT DUE	AMOUNT PAID
CI-887939	03/07/07	508 80	

590994
KENTUCKY AMERICAN WATER
PO BOX 5610
CHERRY HILL NJ 08034-0510

REMIT TO

UNIVAR USA INC
13009 COLLECTIONS CTR DR
CHICAGO IL 60693

PLEASE USE REVERSE SIDE FOR DETAILING DEDUCTIONS OR PAYMENT DISCREPANCIES

2 1 140 1 MB 0 326 94111S11 XRX

Please remit to:

Applied Specialties, Inc.
P.O. Box 307
Avon Lake, OH 44012

RECEIVED
MAY 26 2009

Invoice

Invoice No: 122397
Our Sales Order: 122397

SSC-MAILROOM

MP-0354 074

Sold To:
American Water - Kentucky
American Water Shared Services Center
Attn: Accounts Payable Dept.
P.O. Box 5610
Cherry Hill, NJ 08034

wk
50047336
9
OU# 10266562

Ship To:
American Water - Kentucky
Kentucky American Water Company
220 Water Plant Lane
Owenton, KY 40359

Invoice Date	Terms	Date Shipped	Ship Via	Freight Terms	FOB	Your P.O. No.
5/21/2009	Net 30	5/21/2009	KUHNLE	DELVD	SP	15120306

Quantity	UOM	Material Description	Price UOM	Unit Price	Total
34,080	LBS	AS-2820* Bulk NSF Lot #: 0913328201 Material Safety Data Sheet Included NSF Certified Certified to NSF/ANSI 60 Standards by NSF. Maximum certified limit under NSF/ANSI 60 certification 200 mg/L.	LBS	$ .486	$ 16,562.88
1	EA	Freight Charge	EA	$ 0	$ .00

Sales Tax	$	.00
Total	$	16,562.88

33555 Pin Oak Parkway, Avon Lake, OH 44012
PH 440-933-9442 FX 440-933-9439

If your payment is returned unpaid, you authorize Applied Specialties, Inc. to electronically debit your bank account for the amount of the check, plus an additional one-time electronic fund transfer from your bank account for a returned-check fee. The returned-check fee will be calculated as follows: $30 or 10% of the face amount (whichever is greater).

Please remit to:

Applied Specialties, Inc.
P.O. Box 307
Avon Lake, OH 44012

Invoice

Received
MAR 09 2009
SSC-Mailroom

Invoice No: 121618
Our Sales Order: 121618

MAT 50047336
NSX. DMC
16,465.68

MP-0354 074

Sold To
American Water - Kentucky
American Water Shared Services Center
Attn: Accounts Payable Dept.
P.O. Box 5610
Cherry Hill, NJ 08034

Ship To
American Water - Kentucky
Kentucky American Water Company
220 Water Plant Lane
Owenton, KY 40359

OV# 10250062

Invoice Date	Terms	Date Shipped	Ship Via	Freight Terms	FOB	Your P.O. No.
3/5/2009	Net 30	3/5/2009	KUHNLE	DELVD	SP	15120306

Quantity	UOM	Material Description	Price UOM	Unit Price	Total
33,880	LBS	AS-2820* Bulk NSF Lot #: 0906128201 Material Safety Data Sheet Included NSF Certified Certified to NSF/ANSI 60 Standards by NSF. Maximum certified limit under NSF/ANSI 60 certification 200 mg/L.	LBS	$ .486	$ 16,465.68
1	EA	Freight Charge	EA	$ 0	$ .00

Sales Tax	$	.00
Total	$	16,465.68

33555 Pin Oak Parkway, Avon Lake, OH 44012
PH 440-933-9442 FX 440-933-9439

If your payment is returned unpaid, you authorize Applied Specialties, Inc. to electronically debit your bank account for the amount of the check, plus an additional one-time electronic fund transfer from your bank account for a returned-check fee. The returned-check fee will be calculated as follows: $30 or 10% of the face amount (whichever is greater).

Please remit to:

Applied Specialties, Inc.
P.O. Box 307
Avon Lake, OH 44012

Received
JAN 22 2009
SSC-Mailroom

Invoice

Invoice No: 121185
Our Sales Order: 121185

V# 50047336 (W)

MP-0354 074

Sold To
American Water - Kentucky
American Water Shared Services Center
Attn: Accounts Payable Dept.
P.O. Box 5610
Cherry Hill, NJ 08034

Ship To
American Water - Kentucky
Kentucky American Water Company
220 Water Plant Lane
Owenton, KY 40359

Invoice Date	Terms	Date Shipped	Ship Via	Freight Terms	FOB	Your P.O. No.
1/19/2009	Net 30	1/19/2009	KUHNLE	DELVD	SP	15120306

Quantity	UOM	Material Description	Price UOM	Unit Price	Total
33,620	LBS	AS-2820* Bulk NSF Lot #: 0901228203 Material Safety Data Sheet Included NSF Certified Certified to NSF/ANSI 60 Standards by NSF. Maximum certified limit under NSF/ANSI 60 certification 200 mg/L.	LBS	$ .486	$ 16,339.32
1	EA	Freight Charge	EA	$ 0	$ .00

REC DOC# 10255812

Sales Tax	$	.00
Total	$	16,339.32

33555 Pin Oak Parkway, Avon Lake, OH 44012
PH 440-933-9442 FX 440-933-9439

If your payment is returned unpaid, you authorize Applied Specialties, Inc. to electronically debit your bank account for the amount of the check, plus an additional one-time electronic fund transfer from your bank account for a returned-check fee. The returned-check fee will be calculated as follows: $30 or 10% of the face amount (whichever is greater).

UNIVAR

PO BOX 34325
SEATTLE WA 98124-1325

www univarusa com

ORIGINAL INVOICE

UNIVAR CINCINNATI
4600 DUES DRIVE
CINCINNATI OH 45246
513-714-5264

Page 1 OF 1

12-11-06 RCVD 0007

1701016S SX

CUST NO /SHIP TO

590994 001
OWENTON WATER PLANT
220 WATER PLANT LANE
OWENTON KY 40359

2 1 221 1 MB 0 326 87951S11 XRX
590994
KENTUCKY AMERICAN WATER
PO BOX 5610
CHERRY HILL NJ 08034-0510

CI874389 11/29/06

INVOICE NO	INV DATE	ORDER NO	CUSTOMER PO NUMBER	FREIGHT TERMS	FOB
CI 874389	11/29/06	595174	15078972	PREPAID (HDR FRT	DELIVERED

SHIP DATE	TAX EXEMPT NO	SALES REP	WAREHOUSE LOCATION	ON TIME DELIVERY
11/29/06		CHARLIE MILLER	CINCINNATI	UNIVAR USA INC

SALES DEPARTMENT	ENTERED BY
INDUSTRIAL CHEMICAL	SHELLEY STEVENS

PRODUCT DESCRIPTION	TAX	QUANTITY ORDERED	QUANTITY SHIPPED B O	BILLING QTY/ UNIT PRICE	EXTENDED AMOUNT
704470 HYDROFLUOSILICIC ACID 550 LB DR 23-25% UNIVAR NSF LIQ EPOLY DR PO# 15078972	Y	1 00 DR	1 00 DR	550 00 0 1750 LB	96 25
644207 UNIVAR PACKAGE DELIVERY 1 EA EA CHARGE SPCL CHG **** **** NA	Y	1 00 EA	1 00 EA	1 00 0 0000 EA	0 00

****
* RECENT RISING FUEL COSTS HAVE MADE IT NECESSARY FOR *
* US TO ADD A TEMPORARY FUEL SURCHARGE TO *
* EACH DELIVERY THIS ISEFFECTIVE MARCH 1, 2000 WE *
* WILL CONTINUE TO MONITOR THE SITUATION AND ADJUST AS *
* CIRCUMSTANCES DICTATE WE APPRECIATE YOUR *
* UNDERSTANDING AND VALUEYOUR BUSINESS *
****

1017571S OV

TERMS NET 30	MERCHANDISE	96 25
	SALES TAX	5 78
	INVOICE TOTAL	102 03

Buyer agrees that all orders or purchases are subject to Univar's Standard Terms and Conditions of Sale as of the date of shipment available at www univarusa com/saleste rms All sales and orders are expressly limited to such terms which may be updated from time to time No other terms and conditions apply to any purchases or orders unless agreed to in writing by both parties

PLEASE DETACH HERE AND RETURN BOTTOM PORTION WITH YOUR PAYMENT

UNIVAR

CUST NO /SHIP TO

INVOICE NO	INVOICE DATE	AMOUNT DUE	AMOUNT PAID
CI-874389	11/29/06	102 03	

590994
KENTUCKY AMERICAN WATER
PO BOX 5610
CHERRY HILL NJ 08034-0510

REMIT TO

UNIVAR USA INC
13009 COLLECTIONS CTR DR
CHICAGO IL 60693

PLEASE USE REVERSE SIDE FOR DETAILING DEDUCTIONS OR PAYMENT DISCREPANCIES

YWASTMT

UNIVAR

P O BOX 34325
SEATTLE WA 98124-1325

www univarusa com

ORIGINAL INVOICE

UNIVAR CINCINNATI
4600 DUES DRIVE
CINCINNATI OH 45246
513-714-5264

Page 1 OF 1

17010165
SX

590994
KENTUCKY AMERICAN WATER
PO BOX 5610
CHERRY HILL NJ 08034-0510

CUST NO /SHIP TO

590994 001
OWENTON WATER PLANT
220 WATER PLANT LANE
OWENTON KY 40359

CI 867607 10/11/06

INVOICE NO	INV DATE	ORDER NO	CUSTOMER P O NUMBER	FREIGHT TERMS	FOB
CI 867607	10/11/06	588102	15078972 15078972	PREPAID (HDR FRT	DELIVERED
SHIP DATE	TAX EXEMPT NO	SALES REP		WAREHOUSE LOCATION	ON TIME DELIVERY
10/11/06		CHARLIE MILLER		CINCINNATI	UNIVAR USA INC
				SALES DEPARTMENT	ENTERED BY
				INDUSTRIAL CHEMICAL	SHELLEY STEVENS

PRODUCT DESCRIPTION	TAX	QUANTITY ORDERED	QUANTITY SHIPPED B O	BILLING QTY/ UNIT PRICE	EXTENDED AMOUNT
704470 HYDROFLUOSILICIC ACID 550 LB DR 23-25% UNIVAR NSF LIQ EPOLY DR PO# 15078972	Y	2 00 DR	2 00 DR	1100 00 0 1750 LB	192 50
644207 UNIVAR PACKAGE DELIVERY 1 EA EA CHARGE SPCL CHG **** **** NA	Y	1 00 EA	1 00 EA	1 00 0 0000 EA	0 00

****
* RECENT RISING FUEL COSTS HAVE MADE IT NECESSARY FOR *
* US TO ADD A TEMPORARY FUEL SURCHARGE TO *
* EACH DELIVERY THIS ISEFFECTIVE MARCH 1, 2000 WE *
* WILL CONTINUE TO MONITOR THE SITUATION AND ADJUST AS *
* CIRCUMSTANCES DICTATE WE APPRECIATE YOUR *
* UNDERSTANDING AND VALUEYOUR BUSINESS *
****

10170045 OV

Received
OCT 20 2006
Shared Services Center

MERCHANDISE	192 50
SALES TAX	11 55
INVOICE TOTAL	204 05

TERMS NET 30

Buyer agrees that all orders or purchases are subject to Univar's Standard Terms and Conditions of Sale as of the date of shipment available at www univarusa com/salesterms All sales and orders are expressly limited to such terms which may be updated from time to time No other terms and conditions apply to any purchase or order unless agreed to in writing by both parties

PLEASE DETACH HERE AND RETURN BOTTOM PORTION WITH YOUR PAYMENT

UNIVAR

CUST NO /SHIP TO

INVOICE NO	INVOICE DATE	AMOUNT DUE	AMOUNT PAID
CI-867607	10/11/06	204 05	

590994
KENTUCKY AMERICAN WATER
PO BOX 5610
CHERRY HILL NJ 08034-0510

REMIT TO

UNIVAR USA INC
13009 COLLECTIONS CTR DR
CHICAGO IL 60693

PLEASE USE REVERSE SIDE FOR DETAILING DEDUCTIONS OR PAYMENT DISCREPANCIES

2 1 139 1 MB 0 326 84978S11 XRX

UNIVAR

P O BOX 34325
SEATTLE WA 98124-1325

www univarusa com

ORIGINAL INVOICE

UNIVAR CINCINNATI
4600 DUES DRIVE
CINCINNATI OH 45246
513-714-5264

17010165 SX

2 1 161 1 MB 0 326 83605511 XRX
590994
KENTUCKY AMERICAN WATER
PO BOX 5610
CHERRY HILL NJ 08034-0510

CUST NO /SHIP TO

590994 001
OWENTON WATER PLANT
220 WATER PLANT LANE
OWENTON KY 40359

CI864156 9/19/06

INVOICE NO	INV DATE	ORDER NO	CUSTOMER PO NUMBER
CI 864156	09/19/06	584123	15078972

SHIP DATE	TAX EXEMPT NO	SALES REP
09/19/06		CHARLIE MILLER

FREIGHT TERMS	FOB
PREPAID (HDR FRT	DELIVERED
WAREHOUSE LOCATION	ON TIME DELIVERY
CINCINNATI	UNIVAR USA INC
SALES DEPARTMENT	ENTERED BY
INDUSTRIAL CHEMICAL	SHELLEY STEVENS

PRODUCT DESCRIPTION	TAX	QUANTITY ORDERED	QUANTITY SHIPPED B O	BILLING QTY/ UNIT PRICE	EXTENDED AMOUNT
704470 HYDROFLUOSILICIC ACID 550 LB DR 23-25% UNIVAR NSF LIQ EPOLY DR PO# 15078972	Y	2 00 DR	2 00 DR	1100 00 0 1750 LB	192 50
644207 UNIVAR PACKAGE DELIVERY 1 EA EA CHARGE SPCL CHG **** **** NA	Y	1 00 EA	1 00 EA	1 00 0 0000 EA	0 00
********** * RECENT RISING FUEL COSTS HAVE MADE IT NECESSARY FOR US TO ADD A TEMPORARY FUEL SURCHARGE TO EACH DELIVERY THIS ISEFFECTIVE MARCH 1, 2000 WE WILL CONTINUE TO MONITOR THE SITUATION AND ADJUST AS CIRCUMSTANCES DICTATE WE APPRECIATE YOUR UNDERSTANDING AND VALUEYOUR BUSINESS **********					
			MERCHANDISE		192 50
			SALES TAX		11 55
			INVOICE TOTAL		204 05

10167700 CV

TERMS NET 30

Received
SEP 29 2006
Shared Services Center

Buy g ees that all orders or pu chases are subject to Univar's Sta d rd Te ms d Condito s of Sale as of the date of shipment a ailable at www univarusa com/salesterms All sales and orders are e pressly l m ted to such te ms which m y be updated from time to time No other terms and condit ons apply to a y purchase o order unless ag eed to in writing by both parties

PLEASE DETACH HERE AND RETURN BOTTOM PORTION WITH YOUR PAYMENT

UNIVAR

CUST NO /SHIP TO

INVOICE NO	INVOICE DATE	AMOUNT DUE	AMOUNT PAID
CI-864156	09/19/06	204 05	

590994
KENTUCKY AMERICAN WATER
PO BOX 5610
CHERRY HILL NJ 08034-0510

REMIT TO

UNIVAR USA INC
13009 COLLECTIONS CTR DR
CHICAGO IL 60693

PLEASE USE REVERSE SIDE FOR DETAILING DEDUCTIONS OR PAYMENT DISCREPANCIES

VWILSTMT

UNIVAR

P O BOX 34325
SEATTLE WA 98124 1325

www univarusa com

ORIGINAL INVOICE

UNIVAR CINCINNATI
4600 DUES DRIVE
CINCINNATI OH 45246
513-714-5264

Page 1 OF 1

17010165
SX

CUST NO /SHIP TO

590994 001
OWENTON WATER PLANT
220 WATER PLANT LANE
OWENTON KY 40359

2 1 180 1 MB 0 326 81148S11 XRX
590994
KENTUCKY AMERICAN WATER
PO BOX 5610
CHERRY HILL NJ 08034-0510

CI857137 8/9/06

INVOICE NO	INV DATE	ORDER NO	CUSTOMER P O NUMBER	FREIGHT TERMS	FOB
CI 857137	08/09/06	577424	15078972 15078972	PREPAID (HDR FRT	DELIVERED
SHIP DATE	TAX EXEMPT NO	SALES REP		WAREHOUSE LOCATION	ON TIME DELIVERY
08/09/06		CHARLIE MILLER		CINCINNATI	UNIVAR USA INC
				SALES DEPARTMENT	ENTERED BY
				INDUSTRIAL CHEMICAL	SHELLEY STEVENS

PRODUCT DESCRIPTION	TAX	QUANTITY ORDERED	QUANTITY SHIPPED B O	BILLING QTY/ UNIT PRICE	EXTENDED AMOUNT
704470 HYDROFLUOSILICIC ACID 550 LB DR 23-25% UNIVAR NSF LIQ EPOLY DR PO# 15078972	Y	2 00 DR	2 00 DR	1100 00 0 1750 LB	192 50
644207 UNIVAR PACKAGE DELIVERY 1 EA EA CHARGE SPCL CHG **** **** NA	Y	1 00 EA	1 00 EA	1 00 0 0000 EA	0 00

****
* RECENT RISING FUEL COSTS HAVE MADE IT NECESSARY FOR *
* US TO ADD A TEMPORARY FUEL SURCHARGE TO *
* EACH DELIVERY THIS ISEFFECTIVE MARCH 1, 2000 WE *
* WILL CONTINUE TO MONITOR THE SITUATION AND ADJUST AS *
* CIRCUMSTANCES DICTATE WE APPRECIATE YOUR *
* UNDERSTANDING AND VALUEYOUR BUSINESS *
****

Received
AUG 18 2006

10163651 ✓

MERCHANDISE	192 50
SALES TAX	11 55
INVOICE TOTAL	204 05

TERMS: NET 30

Buyer agrees th t ll d or purchases are subject to Univar's Standard Terms and Conditions of Sale as of the d t f shipment a a lable at www univa us com/s lest m All sales and orde s are expressly limited to such te ms which may be upd ted from time to time No other terms and conditions apply to any purchase or order unless ag e d to writ g by both parties

PLEASE DETACH HERE AND RETURN BOTTOM PORTION WITH YOUR PAYMENT

UNIVAR
CUST NO /SHIP TO

INVOICE NO	INVOICE DATE	AMOUNT DUE	AMOUNT PAID
CI-857137	08/09/06	204 05	

590994
KENTUCKY AMERICAN WATER
PO BOX 5610
CHERRY HILL NJ 08034-0510

REMIT TO

UNIVAR USA INC
13009 COLLECTIONS CTR DR
CHICAGO IL 60693

PLEASE USE REVERSE SIDE FOR DETAILING DEDUCTIONS OR PAYMENT DISCREPANCIES

UNIVAR

P O BOX 34325
SEATTLE WA 98124-1325

www univarusa com

ORIGINAL INVOICE

UNIVAR CINCINNATI
4600 DUES DRIVE
CINCINNATI OH 45246
513-714-5264

Page 1 OF 1

17010165
SX

590994
KENTUCKY AMERICAN WATER
PO BOX 5600
CHERRY HILL NJ 08034-0590

CUST NO /SHIP TO

590994 001
OWENTON WATER PLANT
220 WATER PLANT LANE
OWENTON KY 40359

CI852705 7/17/06

INVOICE NO	INV DATE	ORDER NO	CUSTOMER P O NUMBER	FREIGHT TERMS	FOB
CI 852705	07/17/06	572906	15078972 15078972	PREPAID (HDR FRT	DELIVERED
SHIP DATE	TAX EXEMPT NO	SALES REP		WAREHOUSE LOCATION	ON TIME DELIVERY
07/17/06		CHARLIE MILLER		CINCINNATI	UNIVAR USA INC
				SALES DEPARTMENT	ENTERED BY
				INDUSTRIAL CHEMICAL	SHELLEY STEVENS

PRODUCT DESCRIPTION	TAX	QUANTITY ORDERED	QUANTITY SHIPPED B O	BILLING QTY./ UNIT PRICE	EXTENDED AMOUNT
704470 HYDROFLUOSILICIC ACID 550 LB DR 23-25% UNIVAR NSF LIQ EPOLY DR PO# 15078972	Y	1 00 DR	1 00 DR	550.00 0 1750 LB	96 25
644207 UNIVAR PACKAGE DELIVERY 1 EA EA CHARGE SPCL CHG **** **** NA	Y	1 00 EA	1 00 EA	1.00 0 0000 EA	0 00

****
* RECENT RISING FUEL COSTS HAVE MADE IT NECESSARY FOR *
* US TO ADD A TEMPORARY FUEL SURCHARGE TO *
* EACH DELIVERY THIS ISEFFECTIVE MARCH 1, 2000 WE *
* WILL CONTINUE TO MONITOR THE SITUATION AND ADJUST AS *
* CIRCUMSTANCES DICTATE WE APPRECIATE YOUR *
* UNDERSTANDING AND VALUEYOUR BUSINESS *
****

10160388 OV

MERCHANDISE.	96 25
SALES TAX	5.78
INVOICE TOTAL	102 03

TERMS. NET 30

Buyer agrees that all orders or purchase are subject to Univar's Standard Terms and Conditions of Sale as of the date of shipment available at www univarusa com/salesterms All sales and orders are expressly limited to such terms which may be updated from time to time If not terms and conditions apply to any purchase or order unless agreed to writing by both parties

PLEASE DETACH HERE AND RETURN BOTTOM PORTION WITH YOUR PAYMENT

UNIVAR

CUST NO /SHIP TO

INVOICE NO	INVOICE DATE	AMOUNT DUE	AMOUNT PAID
CI-852705	07/17/06	102 03	

590994
KENTUCKY AMERICAN WATER
PO BOX 5600
CHERRY HILL NJ 08034-0590

REMIT TO

UNIVAR USA INC
13009 COLLECTIONS CTR DR
CHICAGO IL 60693

PLEASE USE REVERSE SIDE FOR DETAILING DEDUCTIONS OR PAYMENT DISCREPANCIES

2 1 141 1 MB 0 326 79663S11 XRX

UNIVAR

P O BOX 34325
SEATTLE WA 98124-1325

www univarusa com

ORIGINAL INVOICE

UNIVAR CINCINNATI
4600 DUES DRIVE
CINCINNATI OH 45246
513-714-5264

Page 1 OF 1

17010165
SX

Received
JUN 30 2006
Shared Services Center

2 1 158 1 MB 0 326 78108511 XRX
590994
KENTUCKY AMERICAN WATER
PO BOX 5600
CHERRY HILL NJ 08034-0590

CUST NO /SHIP TO

590994 001
OWENTON WATER PLANT
220 WATER PLANT LANE
OWENTON KY 40359

A12 SUPV 05

CI848663 6/21/06

INVOICE NO	INV DATE	ORDER NO	CUSTOMER PO NUMBER
CI 848663	06/21/06	569071	15078972 5678972

SHIP DATE	TAX EXEMPT NO	SALES REP
06/21/06		CHARLIE MILLER

FREIGHT TERMS	FOB
PREPAID (HDR FRT	DELIVERED
WAREHOUSE LOCATION	ON TIME DELIVERY
CINCINNATI	UNIVAR USA INC
SALES DEPARTMENT	ENTERED BY
INDUSTRIAL CHEMICAL	SHELLEY STEVENS

PRODUCT DESCRIPTION	TAX	QUANTITY ORDERED	QUANTITY SHIPPED B O	BILLING QTY/ UNIT PRICE	EXTENDED AMOUNT
704470 HYDROFLUOSILICIC ACID 550 LB DR 23-25% UNIVAR NSF LIQ EPOLY DR PO# 15078972	Y	1 00 DR	1 00 DR	550 00 0 1750 LB	96 25
644207 UNIVAR PACKAGE DELIVERY 1 EA EA CHARGE SPCL CHG **** **** NA	Y	1 00 EA	1 00 EA	1 00 0 0000 EA	0 00
********** * RECENT RISING FUEL COSTS HAVE MADE IT NECESSARY FOR * * US TO ADD A TEMPORARY FUEL SURCHARGE TO * * EACH DELIVERY THIS ISEFFECTIVE MARCH 1, 2000 WE * * WILL CONTINUE TO MONITOR THE SITUATION AND ADJUST AS * * CIRCUMSTANCES DICTATE WE APPRECIATE YOUR * * UNDERSTANDING AND VALUEYOUR BUSINESS * **********					

Need Rec Doc #

Rec

TERMS NET 30

MERCHANDISE	96 25
SALES TAX.	5 78
INVOICE TOTAL	102 03

By agre s that all o ders purch es a e subje t to Univar's Standa d Te ms and Condit s of Sale as of the date of shipment available t www.un a U coml leste ms All sal and o d a e exp ssly limited to s hle ms which may be updated from t me to t me TC th te ms a d t ditions apply t ny p chas o der unless agr ed to t writing by both parties

PLEASE DETACH HERE AND RETURN WITH PAYMENT

UNIVAR

CUST NO /SHIP TO

INVOICE NO	INVOICE DATE	AMOUNT DUE	AMOUNT PAID
CI-848663	06/21/06	102 03	

590994
KENTUCKY AMERICAN WATER
PO BOX 5600
CHERRY HILL NJ 08034-0590

REMIT TO

UNIVAR USA INC
13009 COLLECTIONS CTR DR
CHICAGO IL 60693

PLEASE USE REVERSE SIDE FOR DETAILING DEDUCTIONS OR PAYMENT DISCREPANCIES

INVOICE

Seller(name, address)
NALCO
Nalco Company

Invoice Number: 93719962	Page Number: Page 1
Invoice date (tax point): 06-Feb-2008	Order/Delivery No: 200320335/115731741
PO Number: 15108731	Shipping Point: ELLWOOD CITY PA US

Mail to
KENTUCKY AMERICAN WATER
PO Box 5610
CHERRY HILL NJ 08034
USA
1870341
Bill-To Number: 150098709

Payer
KENTUCKY AMERICAN WATER
PO Box 5610
CHERRY HILL NJ 08034
USA
Payer Number: 150098709

Buyer/Sold-To
KENTUCKY AMERICAN WATER
220 WATER LN
OWENTON KY 40359
USA
Sold-To Number: 150098740

Ship To Address
KENTUCKY AMERICAN WATER
220 WATER LN
OWENTON KY 40359
USA

Terms of delivery and payment
TERMS OF DELIVERY: DDP
PAYMENT DUE DATE: 07-Mar-2008
PAYMENT TERMS: Net 30 Days
MODE OF TRANSPORT: Jevic Transportation Inc.

Bank Information
Remit to: Nalco Company
PO Box 640863,Pittsburgh,PA,15264-0863
REF: 93719962
Why not remit by electronic payment next time ? Ask us for details!

Quantity	Description	Quantity Used	Unit Price	Amount
4.0 EA	LS.15 CAT-FLOC LS DRUM 210 LITER 55GAL **Tariff Code:** 3911.90.2500 **Tariff Description :** Polymer **Batch Number:** EL8A1400A0 **Country of Origin:** US **Goods Shipped Date:** 06-Feb-2008	1,799 LBS	0.54 / 1 LBS	971.46
	Transportation & Energy Surcharge			56.83

Need Rec Doc
A125ECOS

Received
FEB 11 2008
SSC-Mailroom

TOTAL DIMENSIONS & WEIGHTS	Cube (m3)	Sub-Total USD 1,028.29
	TAX @6.000 %	Amount USD 61.70
		Amount USD 0.00
		Amount USD 0.00
	INVOICE TOTAL	USD 1,089.99

Customer Notes
If you have any questions regarding this document, please call Customer Services on 1-800-288-0879 or fax 1-800-288-0878 or email CUSTOMERSERVICE@NALCO.COM.

Other Information
This invoice is subject to our standard Terms and Conditions of sale, a copy of which is printed on the reverse side of the document, effective 01-Jan-2007
Quantities shown are expressed with more detail than the shipping documents

Name of Signatory (if applicable)

Place and date of issue
06-Feb-2008

Signature

IC MU101

INVOICE

Seller(name, address)
NALCO
Nalco Company

Received
MAY 22 2007
SSC-Mailroom

Document Number: 93232973	Page Number: Page 1
Invoice date (tax point): 16-May-2007	Order/Delivery No: 200049834/115109643
PO Number: 15096091	Shipping Point: ELLWOOD CITY PA US

Mail to
KENTUCKY AMERICAN WATER
PO Box 5610
CHERRY HILL NJ 08034
USA

Bill-To Number: 150098709

Payer
KENTUCKY AMERICAN WATER
PO Box 5610
CHERRY HILL NJ 08034
USA

Payer Number: 150098709

Buyer/Sold-To
KENTUCKY AMERICAN WATER
220 WATER LN
OWENTON KY 40359
USA

18703441
SX

Sold-To Number: 150098740

Ship To Address
KENTUCKY AMERICAN WATER
220 WATER LN
OWENTON KY 40359
USA

Terms of delivery and payment
TERMS OF DELIVERY: DDP
PAYMENT DUE DATE: 15-Jun-2007
PAYMENT TERMS: Net 30 Days
MODE OF TRANSPORT: Jevic Transportation Inc.

Bank Information
Remit to: Nalco Company
PO Box 640863,Pittsburgh,PA,15264-0863
REF: 93232973

Why not remit by electronic payment next time ? Ask us for details!

Quantity	Description	Quantity Shipped	Unit Price	Amount
2 EA	POLEZ675.15 POL-E-Z(R) 675 DRUM 210 LITER 55GAL Tariff Code: 3906.90.5000 Tariff Description : Acrylic polymer Batch Number: EL7E0370A0 Country of Origin: US Goods Shipped Date: 16-May-2007 Unloading Point: CHEMICAL RECEIVING	933.775 LBS	0.89 / 1 LBS	831.06

10192247 OV

TOTAL DIMENSIONS & WEIGHTS | Cube (m3)

Sub-Total	USD 831.06
TAX @6.000 %	Amount USD 49.86
	Amount USD 0.00
	Amount USD 0.00
DOCUMENT TOTAL	USD 880.92

Customer Notes
If you have any questions regarding this document, please call Customer Services on 1-800-288-0879 or fax 1-800-288-0878 or email CUSTOMERSERVICE@NALCO.COM.

Other Information
This invoice is subject to our standard Terms and Conditions of sale, a copy of which is printed on the reverse side of the document, effective 01-Jan-2007
Quantities shown are expressed with more detail than the shipping documents

Name of Signatory (if applicable)

Place and date of issue: 16-May-2007

Signature

IC MU101

UNIVAR

P O BOX 34325
SEATTLE WA 98124-1325

www univarusa com

ORIGINAL INVOICE

UNIVAR CINCINNATI
4600 DUES DRIVE
CINCINNATI OH 45246
513-714-5264

17010165 SX

2 1 139 1 MB 0 326 84978511 XRx
590994
KENTUCKY AMERICAN WATER
PO BOX 5610
CHERRY HILL NJ 08034-0510

CUST NO /SHIP TO

590994 001
OWENTON WATER PLANT
220 WATER PLANT LANE
OWENTON KY 40359

CI867611 10/11/06

INVOICE NO	INV DATE	ORDER NO	CUSTOMER PO NUMBER
CI 867611	10/11/05	588099	15078974

15078974

SHIP DATE	TAX EXEMPT NO	SALES REP
10/11/06		CHARLIE MILLER

FREIGHT TERMS	FOB
PREPAID/HDR FRT	DELIVERED

WAREHOUSE LOCATION	ON TIME DELIVERY
CINCINNATI	UNIVAR USA INC

SALES DEPARTMENT	ENTERED BY
INDUSTRIAL CHEMICAL	SHELLEY STEVENS

PRODUCT DESCRIPTION	TAX	QUANTITY ORDERED	QUANTITY SHIPPED B O	BILLING QTY/ UNIT PRICE	EXTENDED AMOUNT
640248 POTASSIUM PERMANGANATE FF 25 KG PL CARUS TECH CRYST POL PAIL LOT # 0445 PO# 15078974	Y	8 00 PL	8 00 PL	440 92 1 9545 LB	861 79
644207 UNIVAR PACKAGE DELIVERY 1 EA EA CHARGE SPCL CHG **** **** NA	Y	1 00 EA	1 00 EA	1 00 0 0000 EA	0 00
**********					
* RECENT RISING FUEL COSTS HAVE MADE IT NECESSARY FOR *					
* US TO ADD A TEMPORARY FUEL SURCHARGE TO *					
* EACH DELIVERY THIS ISEFFECTIVE MARCH 1, 2000 WE *					
* WILL CONTINUE TO MONITOR THE SITUATION AND ADJUST AS *					
* CIRCUMSTANCES DICTATE WE APPRECIATE YOUR *					
* UNDERSTANDING AND VALUEYOUR BUSINESS *					
**********					

Received
OCT 20 2006
Shared Services Center

10170048 CV

TERMS NET 30

MERCHANDISE	861 79
SALES TAX	51 71
INVOICE TOTAL	913 50

Buyer agrees that all orders or purchases are subject to Univar Standard Terms and Conditions of Sale as of the date of shipment available at www.univarusa.com/salesterms. All sales and orders are expressly limited to such terms and may be updated from time to time. No oral terms and conditions apply to any purchase order unless agreed to in writing by both parties.

PLEASE DETACH HERE AND RETURN BOTTOM PORTION WITH YOUR PAYMENT

UNIVAR

CUST NO /SHIP TO

INVOICE NO	INVOICE DATE	AMOUNT DUE	AMOUNT PAID
CI-867611	10/11/06	913 50	

590994
KENTUCKY AMERICAN WATER
PO BOX 5610
CHERRY HILL NJ 08034-0510

REMIT TO

UNIVAR USA INC
13009 COLLECTIONS CTR DR
CHICAGO IL 60693

PLEASE USE REVERSE SIDE FOR DETAILING DEDUCTIONS OR PAYMENT DISCREPANCIES

VW37HT

UNIVAR

P O BOX 34325
SEATTLE WA 98124-1325

www.univarusa.com

ORIGINAL INVOICE

UNIVAR CINCINNATI
4600 DUES DRIVE
CINCINNATI OH 45246
513-714-5264

590994
KENTUCKY AMERICAN WATER
PO BOX 5610
CHERRY HILL NJ 08034-0510

1701016S SX

CUST NO /SHIP TO

590994 001
OWENTON WATER PLANT
220 WATER PLANT LANE
OWENTON KY 40359

CI857138 8/9/06

INVOICE NO	INV DATE	P ORDER NO	CUSTOMER PO NUMBER	FREIGHT TERMS	FOB
CI 857138	08/09/06	577426	15078974	PREPAID (HDR FRT	DELIVERED
SHIP DATE	TAX EXEMPT NO	SALES REP	WAREHOUSE LOCATION	CIT TIME DELIVERY	
08/09/06		CHARLIE MILLER	CINCINNATI	UNIVAR USA INC	
			SALES DEPARTMENT	ENTERED BY	
			INDUSTRIAL CHEMICAL	SHELLEY STEVENS	

PRODUCT DESCRIPTION	TAX	QUANTITY ORDERED	QUANTITY SHIPPED B O	BILLING QTY/ UNIT PRICE	EXTENDED AMOUNT
640248 POTASSIUM PERMANGANATE FF 25 KG PL CARUS TECH CRYST POL PAIL PO# 15078974	Y	6 00 PL	6 00 PL	330 69 1 9545 LB	646 34
644207 UNIVAR PACKAGE DELIVERY 1 EA EA CHARGE SPCL CHG **** **** NA	Y	1 00 EA	1 00 EA	1 00 0 0000 EA	0 00
**********					
* RECENT RISING FUEL COSTS HAVE MADE IT NECESSARY FOR *					
* US TO ADD A TEMPORARY FUEL SURCHARGE TO *					
* EACH DELIVERY THIS ISEFFECTIVE MARCH 1, 2000 WE *					
* WILL CONTINUE TO MONITOR THE SITUATION AND ADJUST AS *					
* CIRCUMSTANCES DICTATE WE APPRECIATE YOUR *					
* UNDERSTANDING AND VALUEYOUR BUSINESS *					
**********					

Received
AUG 18 2006

1016365H OV

TERMS NET 30

MERCHANDISE	646 34
SALES TAX	38 78
INVOICE TOTAL	685 12

Buyer agrees that all orders or pu hases are subj t to Univar's Standard Terms and Conditions of Sale s of the date of shipment a ailable t www.univa sa com/saleste ms All sales and o ders are e pr sly limited to s h te ms wh ch may be updated from time to time No other te ms nd condtio s pply to any purch se or order unle s g eed to in writ g by both part es

PLEASE DETACH HERE AND RETURN BOTTOM PORTION WITH YOUR PAYMENT

UNIVAR

CUST NO /SHIP TO

INVOICE NO	INVOICE DATE	AMOUNT DUE	AMOUNT PAID
CI 857138	08/09/06	685 12	

590994
KENTUCKY AMERICAN WATER
PO BOX 5610
CHERRY HILL NJ 08034-0510

REMIT TO

UNIVAR USA INC
13009 COLLECTIONS CTR DR
CHICAGO IL 60693

PLEASE USE REVERSE SIDE FOR DETAILING DEDUCTIONS OR PAYMENT DISCREPANCIES

2 1 180 1 MB 0 326 81148S11 XRX

VWASTMT

UNIVAR

P O BOX 34325
SEATTLE WA 98124-1325

www univarusa com

ORIGINAL INVOICE

UNIVAR CINCINNATI
4600 DUES DRIVE
CINCINNATI OH 45246
513-714-5264

Page 1 OF 1

17010165 RD

Received
JUN 30 2006
Shared Services Center

590994
KENTUCKY AMERICAN WATER
PO BOX 5600
CHERRY HILL NJ 08034-0590

CUST NO /SHIP TO

590994 001
OWENTON WATER PLANT
220 WATER PLANT LANE
OWENTON KY 40359

A12SoPV05

CI848566 6/21/06

INVOICE NO	INV DATE	ORDER NO	CUSTOMER PO NUMBER
CI 848566	06/21/06	569074	15078974

15078974

SHIP DATE	TAX EXEMPT NO	SALES REP
06/21/06		CHARLIE MILLER

FREIGHT TERMS	FOB
PREPAID (HDR FRT	DELIVERED
WAREHOUSE LOCATION	ON TIME DELIVERY
CINCINNATI	UNIVAR USA INC
SALES DEPARTMENT	ENTERED BY
INDUSTRIAL CHEMICAL	SHELLEY STEVENS

PRODUCT DESCRIPTION	TAX	QUANTITY ORDERED	QUANTITY SHIPPED B O	BILLING QTY./ UNIT PRICE	EXTENDED AMOUNT
640248 POTASSIUM PERMANGANATE FF 25 KG PL CARUS INDUST CRYST POL PAIL PO# 15078974	Y	6 00 PL	6 00 PL	330 69 1 9545 LB	646 34
644207 UNIVAR PACKAGE DELIVERY 1 EA EA CHARGE SPCL CHG **** **** NA	Y	1 00 EA	1 00 EA	1 00 0 0000 EA	0 00

****
* RECENT RISING FUEL COSTS HAVE MADE IT NECESSARY FOR *
* US TO ADD A TEMPORARY FUEL SURCHARGE TO *
* EACH DELIVERY THIS ISEFFECTIVE MARCH 1, 2000 WE *
* WILL CONTINUE TO MONITOR THE SITUATION AND ADJUST AS *
* CIRCUMSTANCES DICTATE WE APPRECIATE YOUR *
* UNDERSTANDING AND VALUEYOUR BUSINESS *
****

Need Rec Doc #

MERCHANDISE	646 34
SALES TAX	38 78
INVOICE TOTAL	685 12

TERMS NET 30

Buyer agrees that all purchases are subject to Univar Standard Terms and Conditions of Sale as of the date of shipment, available at www.univarusa.com/salesterms. All sales and orders are expressly limited to such terms, which may be updated from time to time, unless otherwise agreed to in writing by both parties.

PLEASE DETACH HERE AND RETURN BOTTOM PORTION

UNIVAR

CUST NO /SHIP TO

INVOICE NO	INVOICE DATE	AMOUNT DUE	AMOUNT PAID
CI-848566	06/21/06	685 12	

590994
KENTUCKY AMERICAN WATER
PO BOX 5600
CHERRY HILL NJ 08034-0590

REMIT TO

UNIVAR USA INC
13009 COLLECTIONS CTR DR
CHICAGO IL 60693

PLEASE USE REVERSE SIDE FOR DETAILING DEDUCTIONS OR PAYMENT DISCREPANCIES

2 1 158 1 MB 0 326 78108S11 XRX

Brenntag Mid-South, Inc.
1405 Highway 136 W • P.O. BOX 20
Henderson, Kentucky 42419-0020

Received
DEC 07 2007
SSC-Mailroom

BRENNTAG

INVOICE#: BMS396348 INV DATE: 11/29/07 *** PAGE 1 OF 1 ***
DUE DATE: 12/29/07

SOLD TO:
AMERICAN SHARED WATER SERVICE
FBO KY AMER WATER (OWENTON)
PO BOX 5610
CHERRY HILL NJ 08034

SHIP TO:
KY AMERICAN WATER COMPANY
OWENTON WATER PLANT
220 WATER PLANT LANE
OWENTON KY 40359

FEDERAL ID #.: 610504545 DATE SHIPPED: 11/29/07 TERMS . . : NET 30 DAYS
B/L #. . . . : 929894-00 SHIP WHS: 40 SALESPRSN: 404
CUSTOMER # .: 520451 SHIP VIA: OUR TRUCK - PKG
CUSTOMER PO#: 15103665 FOB . . : DELIVERED
TAX EX# : 40590

UNITS SHIPPED	PROD #	WGT/GAL	TOTAL QTY	UNIT PRICE	EXTENDED
** DO NOT MAIL CONTAINER DEPOSIT CREDIT MEMOS **					
10.0000	195561	9.760	485.0000#	1.1700	567.45
48.5000 # PAIL		SOD PERMANGANATE 20% NSF CARUSOL		8> F/S	

50 141748

OV 10214100

QUESTIONS, CALL 502-863-2874

****
* REMIT TO ADDRESS: *
* BRENNTAG MID-SOUTH, INC *
* 3796 RELIABLE PARKWAY *
* CHICAGO IL 60686-0037 *
****

MERCHANDISE	567.45
PAID ON OR PRIOR TO 12/29/07 INVOICE TOTAL	567.45
PAID AFTER 12/29/07 INVOICE TOTAL	573.12

Original Document

Atlanta, GA	Columbus, OH	Indianapolis, IN	Miami, FL	St. Albans, WV
Bartonville, IL	Georgetown, KY	Kansas City, MO	Nashville, TN	St. Louis, MO
Calvert City, KY	Greeneville, TN	Kennesaw, GA	Nitro, WV	Tampa, FL
Chattanooga, TN	Henderson, KY	Louisville, KY	Orlando, FL	Terre Haute, IN
Clearwater, FL	Huntsville, AL	Memphis, TN	Springfield, MO	Valdosta, GA

*** ALL SALES SUBJECT TO AND GOVERNED BY THE TERMS AND CONDITIONS SET FORTH ON THE REVERSE SIDE ***

Brenntag Mid-South, Inc.

1405 Highway 136 W • P.O. BOX 20
Henderson, Kentucky 42419-0020

BRENNTAG [redacted]

Received
NOV 16 2007
PSC-Mailroom

50141748
JR

INVOICE#: BMS386601 INV DATE: 11/07/07 *** PAGE 1 OF 1 ***
DUE DATE: 12/07/07

SOLD TO:
AMERICAN SHARED WATER SERVICE
FBO KY AMER WATER (OWENTON)
PO BOX 5610
CHERRY HILL NJ 08034

SHIP TO:
KY AMERICAN WATER COMPANY
OWENTON WATER PLANT
220 WATER PLANT LANE
OWENTON KY 40359

FEDERAL ID #: 610504545 DATE SHIPPED: 11/07/07 TERMS . . : NET 30 DAYS
B/L #. . . . : 922805-00 SHIP WHS: 40 SALESPRSN: 404
CUSTOMER # . : 520451 SHIP VIA: OUR TRUCK - PKG
CUSTOMER PO#: 15103665 FOB . . : DELIVERED
TAX EX# : 40590

UNITS SHIPPED	PROD #	WGT/GAL	TOTAL QTY	UNIT PRICE	EXTENDED
** DO NOT MAIL CONTAINER DEPOSIT CREDIT MEMOS **					
10.0000	195561	9.760	485.0000#	1.1700	567.45
48.5000 # PAIL			SOD PERMANGANATE 20% NSF CARUSOL 7> F/S		

Rec
10211247

QUESTIONS, CALL 502-863-2874

****
* REMIT TO ADDRESS: *
* BRENNTAG MID-SOUTH, INC *
* 3796 RELIABLE PARKWAY *
* CHICAGO IL 60686-0037 *
****

MERCHANDISE 567.45

PAID ON OR PRIOR TO 12/07/07 INVOICE TOTAL 567.45

PAID AFTER 12/07/07 INVOICE TOTAL 573.12

Original Document

Atlanta, GA	Columbus, OH	Indianapolis, IN	Miami, FL	St. Albans, WV
Bartonville, IL	Georgetown, KY	Kansas City, MO	Nashville, TN	St. Louis, MO
Calvert City, KY	Greeneville, TN	Kennesaw, GA	Nitro, WV	Tampa, FL
Chattanooga, TN	Henderson, KY	Louisville, KY	Orlando, FL	Terre Haute, IN
Clearwater, FL	Huntsville, AL	Memphis, TN	Springfield, MO	Valdosta, GA

*** ALL SALES SUBJECT TO AND GOVERNED BY THE TERMS AND CONDITIONS SET FORTH ON THE REVERSE SIDE ***

Brenntag Mid-South, Inc.
1405 Highway 136 W • P.O. BOX 20
Henderson, Kentucky 42419-0020

Received
OCT 22 2007
SSC-Mailroom

BRENNTAG

5014748

A12SPEC01

INVOICE#: BMS375043 INV DATE: 10/17/07 *** PAGE 1 OF 1 ***
DUE DATE: 11/16/07

SOLD TO:
AMERICAN SHARED WATER SERVICE
FBO KY AMER WATER (OWENTON)
PO BOX 5610
CHERRY HILL NJ 08034

SHIP TO:
KY AMERICAN WATER COMPANY
OWENTON WATER PLANT
220 WATER PLANT LANE
OWENTON KY 40359

FEDERAL ID #: 610504545 DATE SHIPPED: 10/17/07 TERMS . . : NET 30 DAYS
B/L #. . . . : 908150-00 SHIP WHS: 40 SALESPRSN: 404
CUSTOMER # . : 520451 SHIP VIA: OUR TRUCK - PKG
CUSTOMER PO#: VERBAL - DAVID SHEHEE FOB . . : DELIVERED
TAX EX# : 40590

UNITS SHIPPED	PROD #	WGT/GAL	TOTAL QTY	UNIT PRICE	EXTENDED
** DO NOT MAIL CONTAINER DEPOSIT CREDIT MEMOS **					
5.0000	195561	9.760	242.5000#	1.1700	283.73
48.5000 # PAIL		SOD PERMANGANATE 20% NSF CARUSOL		6> F/S	

QUESTIONS, CALL 502-863-2874

****
* REMIT TO ADDRESS: *
* BRENNTAG MID-SOUTH, INC *
* 3796 RELIABLE PARKWAY *
* CHICAGO IL 60686-0037 *
****

MERCHANDISE	283.73
PAID ON OR PRIOR TO 11/16/07 INVOICE TOTAL	283.73
PAID AFTER 11/16/07 INVOICE TOTAL	286.57

Original Document

Atlanta, GA	Columbus, OH	Indianapolis, IN	Miami, FL	St. Albans, WV
Bartonville, IL	Georgetown, KY	Kansas City, MO	Nashville, TN	St. Louis, MO
Calvert City, KY	Greeneville, TN	Kennesaw, GA	Nitro, WV	Tampa, FL
Chattanooga, TN	Henderson, KY	Louisville, KY	Orlando, FL	Terre Haute, IN
Clearwater, FL	Huntsville, AL	Memphis, TN	Springfield, MO	Valdosta, GA

*** ALL SALES SUBJECT TO AND GOVERNED BY THE TERMS AND CONDITIONS SET FORTH ON THE REVERSE SIDE ***

UNIVAR

P.O. BOX 34325
SEATTLE, WA 98124-1325

www.univarusa.com

ORIGINAL INVOICE

UNIVAR CINCINNATI
4600 DUES DRIVE
CINCINNATI OH 45246
513-714-5264

Page 1 OF 1

17010165 AD

Received
MAY 30 2007
SSC-Mailroom

590994
KENTUCKY AMERICAN WATER
PO BOX 5610
CHERRY HILL NJ 08034-0510

CUST. NO./SHIP TO

590994 001
OWENTON WATER PLANT
220 WATER PLANT LANE
OWENTON KY 40359

CI899119 5/16/07

INVOICE NO.	INV. DATE	ORDER NO.	CUSTOMER P.O. NUMBER	FREIGHT TERMS	FOB
CI-899119	05/16/07	621196	15095518	PREPAID (HDR FRT -	DELIVERED
				WAREHOUSE LOCATION: CINCINNATI	ON TIME DELIVERY: UNIVAR USA INC.
SHIP DATE: 05/16/07	TAX EXEMPT NO.: 040590.X		SALES REP: CHARLIE MILLER	SALES DEPARTMENT: INDUSTRIAL CHEMICAL	ENTERED BY: SHELLEY STEVENS

PRODUCT DESCRIPTION	TAX	QUANTITY ORDERED	QUANTITY SHIPPED B.O.	BILLING QTY / UNIT PRICE	EXTENDED AMOUNT
353640 SODIUM THIOSULFATE 30% 535 LB DR UNIVAR TECH SOLN EPOLY DR LOT #: CI057881898	N	1.00 DR	1.00 DR	535.00 0.2000 LB	107.00
644207 UNIVAR PACKAGE DELIVERY 1 EA EA CHARGE SPCL CHG **** **** NA	N	1.00 EA	1.00 EA	1.00 0.0000 EA	0.00

***

Brenntag Mid-South, Inc

1405 Highway 136 W PO BOX 20
Henderson Kentucky 42419 0020

BRENNTAG

50141748

INVOICE# BMS217748 INV DATE 4/20/07 *** PAGE 1 OF 1 ***
DUE DATE 5/20/07

SOLD TO
AMERICAN SHARED WATER SERVICE
FBO KY AMER WATER (OWENTON)
PO BOX 5610
CHERRY HILL NJ 08034

SHIP TO
KY AMERICAN WATER COMPANY
OWENTON WATER PLANT
220 WATER PLANT LANE
OWENTON KY 40359

FEDERAL ID # 610504545 DATE SHIPPED 4/20/07 TERMS NET 30 DAYS
B/L # 772779-00 SHIP WHS 40 SALESPERSON 404
CUSTOMER # 520451 SHIP VIA OUR TRUCK - PKG
CUSTOMER PO# 15093237 FOB DELIVERED
TAX EX# 40590

UNITS SHIPPED	PROD #	WGT/GAL	TOTAL QTY	UNIT PRICE	EXTENDED
4	0000 647328	10 780	2264 0000#	1900	430 16
	566 0000 # -PDRM	SULFURIC ACID 38 5%			
				>> PBL	
	DEPOSIT	50 00			

10189289 OV

QUESTIONS, CALL 502-863-2874

****
* REMIT TO ADDRESS *
* BRENNTAG MID-SOUTH, INC *
* 3796 RELIABLE PARKWAY *
* CHICAGO IL 60686-0037 *
****

MERCHANDISE	430 16
CONTAINER DEPOSIT	200 00
FUEL SURCHARGE	37 50
PAID ON OR PRIOR TO 5/20/07 INVOICE TOTAL	667 66
PAID AFTER 5/20/07 INVOICE TOTAL	674 34

Original Document

Atlanta GA	Columbus IN	Henderson KY	Kennesaw GA	Nitro WV	St Louis MO
Calvert City KY	Columbus OH	Huntsville AL	Memphis TN	Orlando FL	Tampa FL
Chattanooga TN	Georgetown KY	Jackson TN	Miami FL	Springfield MO	Valdosta GA
Clearwater FL	Greeneville TN	Kansas City MO	Nashville TN	St Albans WV	

*** ALL SALES SUBJECT TO AND GOVERNED BY THE TERMS AND CONDITIONS SET FORTH ON THE REVERSE SIDE ***

Brenntag Mid-South, Inc

1405 Highway 136 W PO BOX 20
Henderson Kentucky 42419 0020

BRENNTAG

5014174 8

INVOICE# BMS211628 INV DATE 4/05/07 *** PAGE 1 OF 1 ***
DUE DATE 5/05/07

SOLD TO
AMERICAN SHARED WATER SERVICE
FBO KY AMER WATER (OWENTON)
PO BOX 5610
CHERRY HILL NJ 08034

SHIP TO
KY AMERICAN WATER COMPANY
OWENTON WATER PLANT
220 WATER PLANT LANE
OWENTON KY 40359

FEDERAL ID # 610504545 DATE SHIPPED 4/05/07 TERMS NET 30 DAYS
B/L # 772790-00 SHIP WHS 40 SALESPERSON 404
CUSTOMER # 520451 SHIP VIA OUR TRUCK - PKG
CUSTOMER PO# 15093237 FOB DELIVERED
TAX EX# 40590

UNITS SHIPPED	PROD #	WGT/GAL	TOTAL QTY	UNIT PRICE	EXTENDED
4	0000 647328	10 780	2264 0000#	1900	430 16
	566 0000 # -PDRM	SULFURIC ACID 38 5%		>> PBL	
	DEPOSIT	50 00			

10188090 CV

Received
APR 12 2007
SSC-Mailroom

QUESTIONS, CALL 502-863-2874

REMIT TO ADDRESS
BRENNTAG MID-SOUTH, INC
3796 RELIABLE PARKWAY
CHICAGO IL 60686-0037

MERCHANDISE	430 16
CONTAINER DEPOSIT	200 00
FUEL SURCHARGE	37 50
PAID ON OR PRIOR TO 5/05/07 INVOICE TOTAL	667 66
PAID AFTER 5/05/07 INVOICE TOTAL	674 34

Original Document

Atlanta GA Columbus IN Henderson KY Kennesaw GA Nitro WV St Louis MO
Calvert City KY Columbus OH Huntsville AL Memphis TN Orlando FL Tampa FL
Chattanooga TN Georgetown KY Jackson TN Miami FL Springfield MO Valdosta GA
Clearwater FL Greeneville TN Kansas City MO Nashville TN St Albans WV

*** ALL SALES SUBJECT TO AND GOVERNED BY THE TERMS AND CONDITIONS SET FORTH ON THE REVERSE SIDE ***

KENTUCKY-AMERICAN WATER COMPANY
CASE NO. 2012-00096
COMMISSION STAFF'S FIRST REQUEST FOR INFORMATION

Witness: Lance Williams/Linda Bridwell

35. Refer to "Engineering Feasibility Study Report for Supplying Kentucky American Water's Northern District Distribution System" at 5.
    a. Identify the local and state regulations that require the "Chemical Bulk Storage Improvements."
    b. Identify the Kentucky-American guidelines that require the "Chemical Bulk Storage Improvements." Provide a copy of each guideline.

Response:

a) 401 KAR 8:020, Section 6 incorporates the water plant design criteria set forth in the Recommended Standards for Water Works (2003 edition) which is published by the Great Lakes-Upper Mississippi River Board of State Public Health and Environmental Managers. Those recommended standards include chemical bulk storage requirements.
b) Please see attached American Water Engineering Standard T-2.

AMERICAN WATER SYSTEM

ENGINEERING STANDARDS

T-2 LIQUID CHEMICAL STORAGE, FEED AND CONTAINMENT

Liquid Chemical Storage, Feed, and Containment

INTRODUCTION

Background

Water treatment chemicals are generally stored and fed in a concentrated form with many being strong acids or bases. While these chemicals are necessary to provide a safe potable water, mismanagement of the chemicals can have injurious consequences to the water consumer, company personnel, and the environment. In addition, many of these chemicals can damage company facilities if the proper equipment and safeguards are not provided.

Scope

This Standard covers the design of liquid chemical storage, feed, and containment facilities. The standard is meant to be used by engineers and other experienced personnel in the basic design and modification of liquid chemical systems. Selecting materials of construction and sizing of components are two examples where technical expertise is required. Guidelines for prioritizing improvements to existing chemical storage and feed systems are presented.

The contents of the Standard go beyond the minimum requirements of Ten State Standards by providing increased protection to consumers, company personnel, water company facilities, and the environment.

Purpose

An engineering standard is necessary to accurately demonstrate the required features of liquid chemical systems to consultants and water company staff involved in maintaining, modifying, and installing such systems. The Standard's goal is to minimize risk to consumers, workers, and the environment by presenting a standardized, proven method of storing, feeding, and containing liquid chemicals. Alternative designs must be carefully evaluated against the Standard before implementation and must not increase the risk of accidental chemical release, or increase the likelihood of human or environmental exposure to the chemical.

REFERENCE

1. Recommended Standards for Water Works (Ten State Standards)

TECHNICAL CONTENTS

Liquid Chemical System Elements

1. Materials of Construction
2. Safety Requirements
3. Bulk Tanks
4. Transfer Pumps
5. Day Tanks
6. Metering Pumps
7. Special Valves
8. Feeding from Drums
9. Inventory Monitoring
10. Secondary Containment
11. Dilution Water
12. Leak Detection
13. Continuous Analyzers

Appendix A - Bulk Liquid Chemical System Standard Schematic Diagram
Appendix B - Low Capacity Chemical System Standard Schematic Diagram
Appendix C - Guidelines for Prioritizing Improvements to Existing Chemical Systems

Description of Liquid Chemical System Elements

1. Materials of Construction

Materials used in chemical systems for tanks, piping, fittings, gaskets, hoses, protective coatings, in-situ instrumentation, etc. must be appropriately selected for each chemical. Material selection charts, chemical suppliers, and equipment vendors are a good source of chemical resistance information. Some water treatment chemicals may be mixtures, or may contain impurities that can increase corrosivity.

2. Safety Requirements

Identification of tanks, piping, and other equipment is necessary to make operators, maintenance personnel, and other workers aware of the chemicals being handled. Identification of chemicals and availability of material safety data sheets (MSDS) is an Occupational Safety and Health Act (OSHA) requirement as well as a state requirement in many cases.

Storage tanks and tank fill lines must be identified with signage identifying the usable capacity of the tank, contents of the tank, chemical hazards, and recommended safety gear.

Access to the fill connection for bulk tanks be must be restricted to prevent unintentional filling. Suggested hardware includes uniquely keyed locks through the fill connection flange or locked covers over the connection.

Piping is to be color coded according to Ten State Standards and identified with labels indicating the chemical with arrows pointing in the normal direction of flow. Pumps are to be identified to avoid possible confusion during operation or maintenance.

Eyewashes and/or emergency showers are to be provided for all liquid chemicals, and located adjacent to the chemical equipment. Proper protective clothing such as aprons, gloves, and eye protection must be provided.

3. Bulk Storage Tanks

Bulk storage tanks are provided where the chemical consumption justifies bulk storage over drum storage, or where the chemical being handled is particularly corrosive and handling of drums would be a safety hazard. Bulk storage tanks are generally sized for 31 days of storage at a maximum dose and average treated water flow, or average dose and maximum treated water flow, whichever is larger. Alternatively, for smaller facilities sizing is to be 125 - 150 % of a bulk shipment of chemical. Sizing for larger facilities should consider the normal delivery quantity and the local time required for delivery. Federal, state, and local regulations governing chemical storage may also be a factor in sizing bulk storage tank capacities.

Bulk storage tanks shall be constructed of high density cross linked polyethylene (HDXLPE) or be an appropriately lined steel tank. Fittings for HDXLPE tanks shall be bolted through the wall style with appropriate bolt and gasket materials. Storage tanks are to be equipped with a fill line, vent line, overflow, and discharge connection. Other accessories include nozzles for continuous level measurement, high level indication, and gasketed hatch. The function of the hatch is primarily for tank inspection, rather than tank entry. A means of access to the hatch, such as a ladder, should be provided.

A near-instantaneous means of determining tank level is to be provided. It is recommended that low level and high level alarms should also be provided. An independent high level switch indicating imminent tank overflow is required with local audible alarms that can be heard at the filling station. The high level switch, independent of the continuous level monitor, is required because of concern for the potential for miscalibration of the continuous level system resulting in a chemical overflow.

Tank overflow must be directed to secondary containment. In cases where the chemical has suspected corrosive or injurious vapors or mists such as hydrofluosilicic acid, ammonium hydroxide, and sodium hypochlorite, the overflow pipe must be fitted with a low headloss, vaportight check valve (flap valve, or Red Valve Series 33 Tide Flex Valve) to allow overflow while preventing the discharge of vapors.

All chemicals with the potential for corrosive or injurious vapors or mists are to be vented to the exterior. In general, this includes hydrofluosilicic acid, ammonium hydroxide, and sodium hypochlorite. The vent line shall not function as the overflow.

It is recommended a remotely actuated valve be installed on or near the tank outlet to allow the bulk tank to be safely isolated in the event of a leak. Without such a valve, personnel

would be required to enter the containment area to operate a manual isolation valve which could expose personnel to considerable safety hazards.

4. Transfer Pumps

Transfer pumps are to be provided to deliver chemical from bulk tanks to day tanks or batch tanks. Transfer pumps provide control and safety in the transfer process as flow can be halted electrically from outside of the containment area. Transfer pumps may be of several types; centrifugal, positive displacement, drum pumps for small systems, etc. Redundant installed pumps are required for disinfectants and primary coagulants, and recommended for other chemicals. A single installed transfer pump is allowed for disinfection and primary coagulants if the production facility can be taken off line for repairs or replacement. Where only one transfer pump is installed, a second pump is to be held in inventory as a spare. A bypass around the transfer pump is not allowed, as it defeats the purpose of the transfer pumps.

Continuous local operator supervision of the transfer process is preferred. Typically, this is accomplished with a hold-to-run (momentary contact) push button switch. Transfer pumps are typically sized to fill the day tank within two minutes to avoid operator fatigue.

For day tanks larger than 100 gallons, a two minute fill period would require high capacity transfer pumps. High capacity transfer pumps have an inherent safety concern because of the rate of transfer, and are expensive. For day tanks larger than 100 gallons, automatic shutoff of the transfer pumps may be employed if the following conditions are met: 1) secondary containment is provided, 2) a high level sensor, a critical high level sensor, and a spill sensor are provided and interlocked with the transfer pump to provide at least three levels of overfill protection. With automatic shutoff, transfer pumps are to be sized to complete the transfer operation within 30 minutes.

Automatic start of the transfer pumps is not allowed under Standard T-2. Any deviation from the manual fill procedures outlined above must be developed through System Engineering.

Discharge piping from the transfer pumps is to be configured to prevent gravity flow or siphonage from the bulk tank. The fill piping downstream of the siphon break must be sized for gravity flow. See the schematic in Appendix A for the recommended piping configuration.

Direct piping from the bulk tank, through the transfer pumps, to the day tank, without an air break is permitted only for viscous chemicals such as polymers.

5. Day Tanks

A day tank is a refillable storage vessel smaller than a bulk storage tank, which directly supplies metering pumps. Day tanks serve two purposes: (1) to allow accurate determinations of chemical use, and (2) to minimize the volume of chemical which can be accidentally discharged into the treated water.

Day tanks are required when bulk storage is provided.

Day tank sizing is to be based on 125% (including freeboard) of the daily volumetric requirements of the maximum dose for the average daily treated water volume, or the average dose for the maximum treated water volume. Where chemical doses have a wide range, resulting in large day tanks, day tanks may be downsized and refilled more than once per day when high chemical demands are experienced.

Day tanks are to be equipped with a vented fill line, vent line, overflow, drain, and discharge connection. Other accessories include continuous measurement of level or weight, and an independent high level switch or probe. With many chemicals it is beneficial to provide a sight glass which can be cleaned to indicate liquid level.

Day tanks may be constructed of any chemically compatible material. Care should be taken when piping the day tank overflow to not allow the liquid level to rise such that the hydrostatic head exceeds the tank's design rating.

All chemicals with the potential for corrosive or injurious vapors or mists are to be vented to the exterior. In general, this includes hydrofluosilicic acid, ammonium hydroxide, and sodium hypochlorite. Tank overflow must be directed to secondary containment. In cases where the chemical has suspected corrosive or injurious vapors or mists such as hydrofluosilicic acid, ammonium hydroxide, and sodium hypochlorite, the overflow pipe must be fitted with a low headloss, vaportight check valve (flap valve, or Red Valve Series 33 Tide Flex Valve) to allow overflow while preventing the discharge of vapors.

Continuous level or weight monitoring is recommended with alarms for high and low level in the day tank. An independent high level switch indicating imminent tank overflow is required, with local audible alarm.

The day tank fill line is to be piped and vented to prevent the possibility of gravity flow or siphonage from the bulk tank to the day tank. See the schematic in the Appendix A for recommended piping configuration. Direct piping is allowed only for viscous chemicals such as polymer.

6. Metering Pumps

Where facilities cannot be taken off line, redundant installed metering pumps are required for disinfectants and primary coagulants, and recommended for all other chemicals. Where only one pump is installed, a second pump is to be held in inventory as a spare.

A calibration cylinder is to be provided on the suction side of the metering pumps to permit accurate determination of the pump's delivery rate.

Metering pumps that have the ability to produce pressures higher than the piping system can withstand, such as motor driven positive displacement metering pumps, must have a pressure relief valve on the discharge of each pump head. No valve may be located between the pump and the pressure relief valve.

Where pumps are feeding against low pressure, a backpressure/anti-siphon valve must be provided to help the pump deliver accurately, and prevent siphoning or gravity flow through the metering pump.

7. Special Valves

Special valves are needed to prevent siphonage, maintain backpressure, and provide pressure relief.

Backpressure Valve

A backpressure valve maintains a steady backpressure against a metering pump to ensure accurate delivery. A second function of this valve is to help prevent siphonage or gravity flow of chemicals from the day tank through the metering pump.

The backpressure valve consists of an adjustable spring loaded diaphragm and seat. The anti-siphon action is lost if the seat becomes fouled. Therefore the backpressure valve requires preventive maintenance and periodic testing.

Pressure Relief Valve

Where positive displacement metering pumps capable of pipe bursting pressure are used, a pressure relief valve is to be used upstream of the first valve on the metering pump discharge. The discharge of the pressure relief valve is to be directed to the day tank or drum. Some pressure relief valves also have a bypass feature to assist in priming the pump.

Anti-Siphon Valve

Anti-siphon protection is required for all liquid chemical discharge lines, regardless of normal operating pressure. Negative pressures can be produced in normally pressurized lines due to power failures, draining of lines, inadvertent valve operation, etc. and anti-siphon protection is particularly vital during upset conditions.

The surest means of providing anti-siphon protection is a physical siphon break as shown below. However, this arrangement is practical only for negative head or low head conditions. This arrangement is not suitable for chemicals that may plug feed lines.

Where the physical siphon break cannot be used because of discharge pressure, an anti-siphon valve is necessary. The anti-siphon valve consists of a spring loaded diaphragm and seat and is similar to a back pressure valve. The anti-siphon action is lost if the seat becomes fouled. Therefore, the valve requires preventive maintenance including periodic testing.

For low pressure conditions where the physical siphon break cannot be used, the anti-siphon valve will be used in series with a backpressure valve which also provides anti-siphon

action. The intent is to use these devices to provide at least two barriers to siphoning or gravity flow of chemical from the day tank through the metering pump.

A review of several accidental releases revealed the releases occurred through the metering pumps while the metering pumps were off. A solenoid valve, linked to the metering pump starter, may be used as a secondary means of providing anti-siphon protection.

Four-Way Valve

Several vendors manufacture a four function valve which provides anti-siphon, backpressure, priming, and pressure relief action. The valve can replace separate pressure relief and backpressure valves. This valve is limited to low capacity metering pumps.

Valve Testing

The capability of back pressure and antisiphon valves to prevent siphoning is dependent upon the integrity of the valve's diaphragm and seat. It is imperative that the integrity of the seal be checked on a regular basis.

One testing method utilizes monitoring the pressure variations upstream of these valves with a permanently installed pressure gauge (and isolation diaphragm). When system pressure is less than the valve's pressure setting, the upstream pressure should not fall below the valve's pressure setting. Where system pressure is above the pressure setting of a back pressure or antisiphon valve, system pressure must be valved off and the pressure monitored while the metering pump delivers to a holding vessel or to the day tank.

Another method allows a portable vacuum pump and reservoir to be connected downstream of each valve to be tested which would collect leakage from a faulty valve. Any leakage through the valve must be trapped in the receiver as the liquids would damage the vacuum pump.

8. Feeding From Drums

In low capacity systems where both bulk tanks and day tanks are not used, the chemical may be fed directly from a non-refillable drum. A weighing scale or reliable level monitoring device shall be used to monitor the quantity of material remaining in the drum. It is recommended the system be equipped with a low weight alarm.

As with day tanks, it is prudent to limit the volume of chemical directly connected to the water supply in case of accidental release. A day tank is to be used if the drum represents more than a seven day average flow-average dose supply.

Adequate ventilation must be provided for drum feed areas. Separate rooms may be necessary for fuming chemicals such as hydrofluosilicic acid because drum systems cannot be sealed and vented as well as bulk and day tank systems.

The weight of drums typically presents safety concerns in handling. Where drums are used, it is recommended drum handling equipment be provided to minimize the risks associated with moving drums. Such equipment includes hoists, pallet trucks, and dollies. It is recommended that training be provided on the proper operation of this equipment.

See the secondary containment requirements for drums in Item 10.

9. Inventory Monitoring

A reliable and accurate means of monitoring inventory is required for bulk tanks, day tanks, and drums. Typically, a continuous level probe is used for this purpose in tanks. However, in a manned station, a sight glass may be sufficient for this purpose. In all cases, a means of physically verifying liquid level is required to perform physical inventory, and calibrate level instrumentation.

Weighing scales may be used for monitoring inventory. States may require day tanks for fluoride be placed on scales. Some disadvantages of scales are that scale platforms are typically placed within the containment area and are susceptible to chemical spills. The use of weighing scales also requires flexible connections for all piping connections. Additionally, a tare weight for the tank must be used to show net weight.

10. Secondary Containment

Primary containment is defined as the container holding the chemical. Secondary containment is the structure designated to hold spillage or leakage.

Secondary containment is to be provided for all bulk tanks, day tanks, batch tanks, metering pumps, and transfer pumps. Experience has shown that pipe connections to tanks and equipment are most prone to leakage. The function of secondary containment is to keep the spilled chemical within a confined area isolated from other processes and chemicals where it can be cleaned up. Therefore, a common or directly interconnected containment area is recommended for all components of a chemical feed system.

Minimum secondary containment volume is to be determined based on 110 percent of the largest storage tank capacity within the containment area. Freeboard should be added to the calculated minimum containment volume.

The secondary containment structure must be protected with a coating or liner if the chemical is corrosive to the containment structure.

Secondary containment is to be provided for all drums. The containment volume must hold 110 percent of the contents of the largest drum.

Secondary containment is to be provided for buried chemical solution lines to minimize the potential for accidental releases to the environment. Secondary containment is not required for lime slurry or powdered activated carbon slurry. Secondary containment systems include double wall pipe, or tubing or hose within a carrier pipe.

11. Dilution Water

Any water supply connected to a chemical system must have proper backflow protection. For filling of batch tanks, an air gap may be used. For direct connection to batch tanks or chemical piping, reduced pressure zone type backflow preventers must be used.

Continuous dilution water is sometimes recommended to improve dispersion at the feed point, to dilute the concentrated chemical to a more practical concentration, or where the chemical output is very low. Dilution water flow must be controlled as variations in flow will cause variations in feed rate. Also, the flow of dilution water must be known to enable setting a desired dilution rate. It is recommended that a solenoid valve be placed on the water supply line that would close if a leak was detected to prevent filling a containment area with dilution water.

12. Leak Detection

It is recommended that both manned and unmanned chemical feed systems be equipped with a sump equipped with a level switch to signal the occurrence of a leak. It is important that personnel be alerted of a leak as soon as possible. Further, it is recommended the leak sensor be electrically interlocked with the isolation valve on the bulk storage tank, the transfer pumps, and solenoid valves on the chemical feed water supply. Upon detection of a leak the valves should close and pumps should stop, until the leak condition is locally acknowledged.

13. Continuous Analyzers

An important facet of protecting the consumer from accidental chemical releases is monitoring of the water quality downstream of the chemical addition point. For strong acids and bases, continuous pH monitoring can warn of an excessive chemical feed. Chlorine residual can be monitored to ensure a correct disinfectant concentration is present.

In a manned station, as a minimum, alarms from these analytical devices should warn the operator so appropriate countermeasures can be taken. In an unmanned facility, the alarms are to be provided for an appropriate action such as shutting off a well pump, or isolating the chemical feed system.

Chlorine residual analyzers are to be provided wherever chlorine or chlorination chemicals are added. Continuous pH monitoring is necessary where caustic soda is fed for post-filtration pH adjustment.

SEE “CAD ATTACHEMENTS” FOR

Appendix A - Bulk Liquid Chemical System Standard Schematic

Appendix B - Low Capacity Chemical System Standard Schematic

APPENDIX C

GUIDELINES FOR PRIORITIZING IMPROVEMENTS to EXISTING CHEMICAL SYSTEMS

Discussion

The primary intent of the Engineering Standard for Liquid Chemical Storage, Feed, and Containment is to present a design basis for new installations. However, guidelines are needed for assigning priorities in upgrading existing facilities.

The following is an outline of the Standard which assigns priorities to the Standard's requirements. A HIGH priority is assigned to features that impact safety for consumers or personnel. A MEDIUM priority includes features that would prevent spills within secondary containment. Medium priority items should be evaluated on a chemical and site specific basis. A LOW priority is assigned to items that are desirable but not essential.

1. Materials of Construction

   It is a HIGH priority that tubing, piping, hoses, gaskets, etc. must be compatible with the chemical being handled.

2. Safety Requirements

   It is a HIGH priority that all safety requirements be met.

3. Bulk Tanks

   Modification of existing bulk storage capacity to comply with the Standard is a LOW priority. Existing storage tanks which are in good condition should not be changed out to comply with the Standard. Fiberglass Reinforced Plastic (FRP) tanks containing hydrofluosilicic acid have a higher than average failure rate, and replacement of the tanks is a MEDIUM priority.

   For non-fuming chemicals, the hatch of an existing tank can serve as the overflow, provided the hatch is loosely covered. Installation of a permanent ladder is a LOW priority.

   Installation of a near-instantaneous means of determining tank level is a HIGH priority. The addition of a critical high level switch and alarm indicating imminent overflow is a MEDIUM priority.

   It is a HIGH priority that overflow from the bulk tank be directed to secondary containment. It is a HIGH priority that tanks containing ammonium hydroxide,

hydrofluosilicic acid, or sodium hypochlorite have vaportight check valves on the overflows to prevent the escape of vapors to enclosed areas. Likewise it is a HIGH priority that these chemicals be vented to the exterior.

The need for a remotely actuated valve located on the bulk tank discharge has a LOW priority because spills would be contained within secondary containment. It is important that an emergency response plan be instituted that outlines how spills within secondary containment will be handled.

4. Transfer Pumps

The addition of transfer pumps to an existing gravity day tank fill system is considered a MEDIUM priority, because spills would be held within secondary containment. Where gravity systems are employed, at least two bulk tank shut-off valves should be accessible from outside the containment area.

Where transfer pumps are installed, it is a HIGH priority that redundant pumps be installed in disinfection or primary coagulant systems unless the production facility can be shut down. Bypass around transfer pumps is not allowed.

Where transfer pumps are operated with a push to run switch, it is a HIGH priority that the pumps have the capability to fill the day tank within two - five minutes. Experience has shown that personnel become mentally and physically fatigued if the time to fill the tank exceeds five minutes.

Where transfer pumps are installed, it is a HIGH priority that the pump discharge piping conform to the schematic in Appendix A to prevent unintentional flow into the day tank. Direct piping is allowed for viscous chemicals such as polymers.

5. Day Tanks

The need to install day tanks in existing post-chemical bulk storage systems is a HIGH priority. Installation of day tanks for pretreatment chemicals such as primary coagulants and polymers is a MEDIUM priority because an accidental release will be held within the confines of the treatment plant. For post-treatment chemicals, the sizing of existing day tanks should be reviewed with oversized tanks either replaced or operating procedures instituted to limit the volume of chemical within the tank.

A near-instantaneous means of determining tank level, or weight is a HIGH priority. The addition of a critical high level switch and alarm indicating imminent overflow is a MEDIUM priority.

It is a HIGH priority that overflow from a day tank be directed to secondary containment. It is a HIGH priority that tanks containing ammonium hydroxide, hydrofluosilicic acid, or sodium hypochlorite have vaportight check valves on the

overflows to prevent the escape of vapors to enclosed areas. Likewise it is a HIGH priority that these chemicals be vented to the exterior.

6. Metering Pumps

It is a HIGH priority that redundant metering pumps be installed in disinfection and primary coagulant feed systems where a production facility outage cannot be tolerated. The installation of calibration cylinders is a LOW priority.

7. Special Valves

The installation of pressure relief valves on feed systems with the capability of producing pipe bursting pressure is a HIGH priority.

The installation of backpressure/anti-siphon valve, in series with a second anti-siphon valve is a HIGH priority in low pressure systems (<30 psi). The installation of a single anti-siphon valve is a HIGH priority in higher pressure systems. The installation of valve testing fittings is a HIGH priority.

8. Feeding From Drums

It is a HIGH priority that the weight, or level of an on-line chemical drum be monitored. The inclusion of a low weight alarm is a LOW priority.

The upgrading of existing ventilation systems for drum feed areas is a MEDIUM priority and must be evaluated on a site and chemical specific basis.

9. Inventory Monitoring

It is a HIGH priority that a near-instantaneous means of determining tank level or weight be provided for bulk tanks, day tanks, and feed drums.

10. Secondary Containment

It is a HIGH priority that secondary containment be provided not only for the bulk tank and day tank, but also for the transfer pumps and metering pumps and the interconnecting piping. It is a HIGH priority that the minimum secondary containment volume is 100 percent of the largest tank within containment. It is a HIGH priority that secondary containment be provided for drum storage areas.

The need for a protective coating, or liner on the secondary containment structure is a MEDIUM priority. In evaluating the need for a coating, the effect of corrosive chemicals on structural components such as walls, columns, and surrounding areas must be considered.

The need to provide secondary containment for buried chemical piping is a MEDIUM priority. The effect of long term leakage on ground water quality, or the effect

of a sudden release to the environment must be evaluated in determining the need for secondary containment.

11. Dilution Water

It is a HIGH priority that proper backflow protection be provided for chemical dilution water. The installation of a meter to monitor dilution water flow for each chemical is a LOW priority, as is a solenoid valve to stop dilution water flow in the event of a spill into secondary containment.

12. Leak Detection

The installation of a leak sump and sensor within secondary containment is a MEDIUM priority for existing systems. The utility of a leak sensor is higher for unmanned systems than for manned facilities.

13. Continuous Analyzers

The installation of continuous pH monitoring downstream of post-filtration caustic soda feed point is a HIGH priority. The installation of chlorine residual monitoring is a MEDIUM priority. The health effects of an accidental release should be considered in the site specific evaluation.

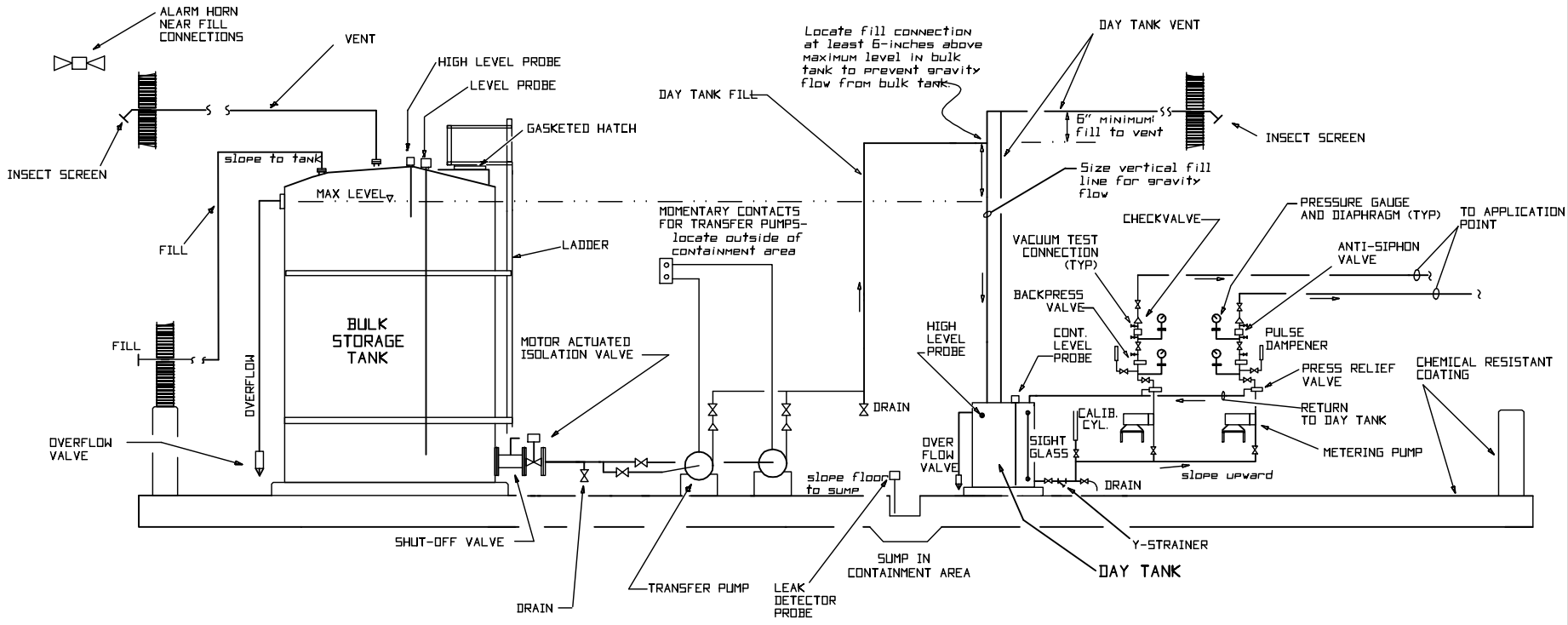

NOTES:

1. This schematic diagram is an appendix to AMERICAN WATER SYSTEM ENGINEERING STANDARD T-2 for LIQUID CHEMICAL STORAGE, FEED, AND CONTAINMENT. Refer to the Standard for specific requirements.

REVISIONS

1. Added pressure gauges, test conn, revised day tank notes. SEC 5/24/93

APPENDIX A
BULK LIQUID CHEMICAL SYSTEM STANDARD SCHEMATIC

ENGINEERING STANDARD T-2

AMERICAN WATER WORKS SERVICE COMPANY, INC.
SYSTEM ENGINEERING
1025 LAUREL OAK RD. VOORHEES, N.J. 08043

DRAWN BY SEC
PROJECT ENG'R
APPROVED
DATE 4-10-92
PROJECT
USE DIMENSIONS ONLY
SCALE NONE

USE APPROVED DRAWINGS ONLY FOR CONSTRUCTION PURPOSES

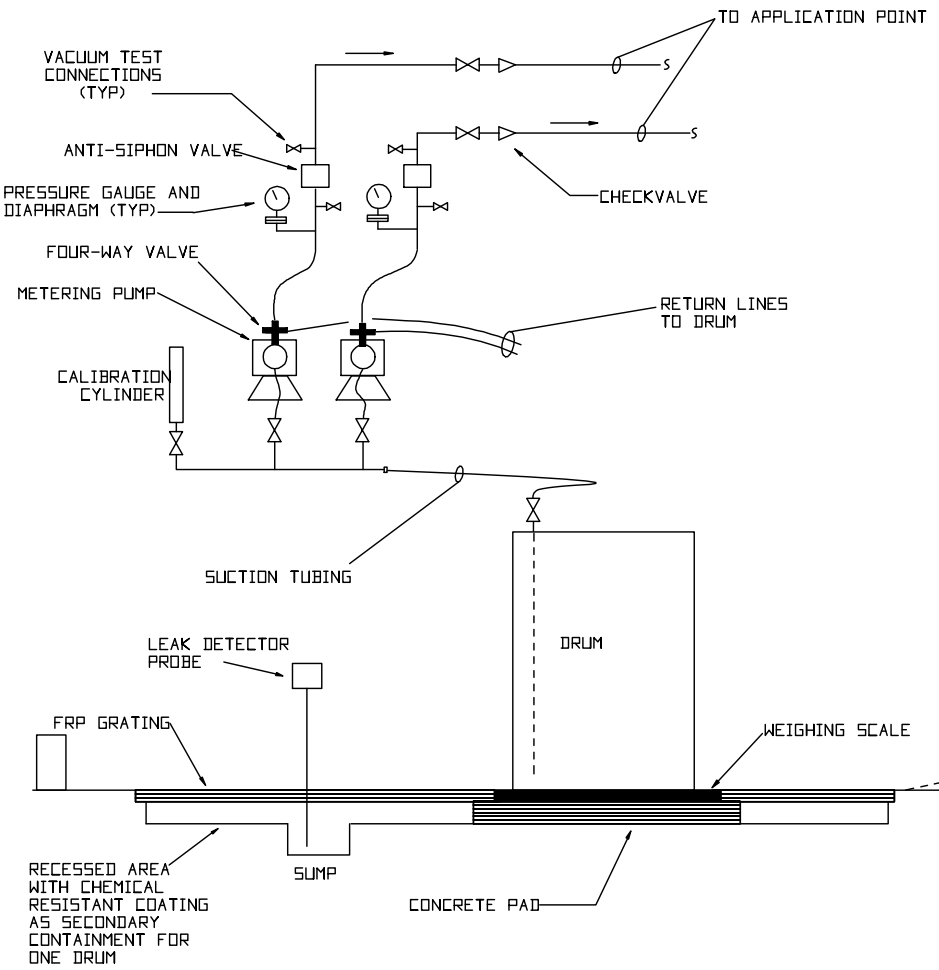

NOTES:

1. This schematic diagram is an appendix to AMERICAN WATER SYSTEM ENGINEERING STANDARD T-2 for LIQUID CHEMICAL STORAGE, FEED, AND CONTAINMENT. Refer to the Standard for specific requirements.

REVISIONS

1. Added pressure gauges, vacuum conn, checkvalves SEC 5/24/93

APPENDIX B
LOW CAPACITY CHEMICAL SYSTEM
STANDARD SCHEMATIC

ENGINEERING STANDARD T-2

AMERICAN WATER WORKS SERVICE COMPANY, INC.
SYSTEM ENGINEERING

1025 LAUREL OAK RD. VOORHEES, N.J. 08043

DRAWN BY
PROJECT ENG'R
APPROVED
DATE 4-10-92
PROJECT
USE DIMENSIONS ONLY
SCALE NONE

USE APPROVED DRAWINGS ONLY FOR CONSTRUCTION PURPOSES

KENTUCKY-AMERICAN WATER COMPANY
CASE NO. 2012-00096
COMMISSION STAFF'S FIRST REQUEST FOR INFORMATION

Witness: Lance Williams

36. Refer to Direct Testimony of Lance E. Williams at 4. Identify and describe the environmental risks to which Mr. Williams refers.

Response:

The environmental risks include the increased risk of chemical spills because of the increased handling and transporting of chemicals due to the lack of chemical storage capacity at the Owenton Water Treatment Plant. Also, there is an increased risk of chemical spills because of the use of temporary containment measures, as opposed to permanently constructed bulk storage containment. Finally, there is an increased risk of discharges from the plant exceeding permitted levels due to inadequate residuals process.

KENTUCKY-AMERICAN WATER COMPANY
CASE NO. 2012-00096
COMMISSION STAFF'S FIRST REQUEST FOR INFORMATION

Witness: Lance Williams

37. Refer to "Engineering Feasibility Study Report for Supplying Kentucky American Water's Northern District Distribution System," Appendix D. Portions of the Notes are truncated. Provide a revised version of this document that shows the complete notes.

Response:

See attached.

Owenton WTP O & M Costs
May 2012

Year	O & M Item				Yearly Total
	Labor[2]	Chemical[1]	Fuel and Power[1,4]	Sludge Disposal[3]	
2014	$362,653	$222,307	$141,320	$32,083	**$758,363**
2015	$373,532	$222,307	$150,126	$33,687	**$779,652**
2016	$384,738	$222,307	$153,529	$35,371	**$795,945**
2017	$396,280	$237,868	$168,882	$37,140	**$840,170**
2018	$408,169	$254,519	$185,770	$38,997	**$887,455**
2019	$420,414	$272,336	$204,347	$40,947	**$938,044**
2020	$433,026	$291,399	$224,782	$42,994	**$992,201**

Notes:

1. Chemical and Fuel and Power costs are based on KAW's 2012-2016 Budget Plan. Chemical costs are estimated to increase 7% each year after 2016. Fuel and Power costs are estimated to increase 10% each year after 2016.
2. Labor costs are based on KAW's 2012 Budget Plan and are estimated to increase 3% each year.
3. Sludge Disposal costs are based on KAW's 2012 Budget Plan and are estimated to increase 5% each year.
4. Fuel and Power costs have been adjusted in 2014 with an addition of $15,000 to account for new intake coming on-line.

KENTUCKY-AMERICAN WATER COMPANY
CASE NO. 2012-00096
COMMISSION STAFF'S FIRST REQUEST FOR INFORMATION

Witness: Keith Cartier / Lance Williams

38. Refer to "Engineering Feasibility Study Report for Supplying Kentucky American Water's Northern District Distribution System," Appendix D. Provide a table in the same format as Appendix D that reflects the same expense items for each year from January 1, 2006 through December 31, 2011.

Response:

Owenton WTP O & M Costs

Year	O & M Item				Yearly Total
	Labor	Chemical	Fuel and Power	Sludge Disposal[B]	
2006[A]	$223,776	$68,741	$34,925	*	$327,442
2007	$279,508	$74,912	$109,551	*	$463,971
2008	$265,706	$91,066	$136,150	*	$492,922
2009	$270,391	$180,413	$125,358	*	$576,162
2010	$326,734	$159,889	$137,932	*	$624,555
2011	$339,263	$224,039	$157,759	$36,441	$757,502

Notes:
A. Full year expense tracking is inconsistent for 2006 as this was the first year of integrating the Owenton operation into the Kentucky American Water systems following acquisition.
B. Sludge Disposal costs were included in chemical expenses Costs prior to 2011.

In addition to the notes above, chemical use has changed over time as efforts to optimize treatment have evolved, with the rise in expenses a result of both usage differences and price changes.

KENTUCKY-AMERICAN WATER COMPANY
CASE NO. 2012-00096
COMMISSION STAFF'S FIRST REQUEST FOR INFORMATION

Witness: Lance Williams

39. Refer to "Engineering Feasibility Study Report for Supplying Kentucky American Water's Northern District Distribution System," Appendix D. State whether the expense estimates take into account improvements to the Owenton Water Treatment Plant.

Response:

No, the expense estimates do not include improvements to the Owenton Water Treatment Plant.

KENTUCKY-AMERICAN WATER COMPANY
CASE NO. 2012-00096
COMMISSION STAFF'S FIRST REQUEST FOR INFORMATION

Witness: Lance Williams

40. Refer to "Engineering Feasibility Study Report for Supplying Kentucky American Water's Northern District Distribution System," Appendices D and E. State all assumptions, show all calculations, and provide all work papers used to derive both appendices. Where such calculations and work papers are in Microsoft Excel worksheet format, provide an electronic copy in Microsoft Excel format.

Response:

See the following attached work papers:
Appendix D work papers
Appendix E work papers

Overton Labor

		January	February	March	April	May	June	July	August	September	October	November	December	Total
123201 OWN-Production														
P08 Labor														
501200 Labor		18,656	17,808	18,656	17,907	19,613	17,907	18,760	19,613	17,055	19,613	18,760	17,907	222,255
501210 Labor NS OT		2,469	2,469	2,469	2,469	2,469	2,469	2,469	2,469	2,469	2,469	2,469	2,469	29,628
501211 Labor OT		925	925			925		925		925		1,850	1,850	8,325
P08 Labor		22,050	21,202	21,125	20,376	23,007	20,376	22,154	22,082	20,449	22,082	23,079	22,226	260,208
P09 Purchased Water														
11														
510100	Purchased Water-Outs	17,409	17,409	17,409	17,409	17,409	17,409	17,409	17,409	17,409	17,409	17,409	17,409	208,908
P09 Purchased Water		17,409	17,409	17,409	17,409	17,409	17,409	17,409	17,409	17,409	17,409	17,409	17,409	208,908
P10 Fuel & Power														
13														
515100	Purch Power WT	9,750	8,922	9,747	9,471	9,747	9,468	9,749	9,748	9,469	9,742	9,467	9,742	115,022
P10 Fuel & Power		9,750	8,922	9,747	9,471	9,747	9,468	9,749	9,748	9,469	9,742	9,467	9,742	115,022
P11 Chemicals														
13														
518000	Chemicals WT	15,817	15,987	17,590	16,434	16,089	19,510	18,193	15,162	15,352	15,528	17,306	17,108	200,076
P11 Chemicals		15,817	15,987	17,590	16,434	16,089	19,510	18,193	15,162	15,352	15,528	17,306	17,108	200,076
P12 Waste Disposal														
13														
511100	Waste Disposal Exp W	3,050	3,050	3,050	3,050	3,050	3,050	3,050	1,550	1,550	1,550	1,550	1,550	29,100
P12 Waste Disposal		3,050	3,050	3,050	3,050	3,050	3,050	3,050	1,550	1,550	1,550	1,550	1,550	29,100
P14 Group Insurance														
504100 Group Insurance		4,611	4,611	4,611	4,611	4,611	4,611	4,611	4,611	4,611	4,611	4,611	4,611	55,332
P14 Group Insurance		4,611	4,611	4,611	4,611	4,611	4,611	4,611	4,611	4,611	4,611	4,611	4,611	55,332
P20 General Office Exp														
16														
575741	Cell Phone AG	45	45	45	45	45	45	45	45	45	45	45	45	540
575780	Trash Removal AG	80	80	80	80	80	80	80	80	80	80	80	80	960
P20 General Office Exp		125	125	125	125	125	125	125	125	125	125	125	125	1,500
P21 Miscellaneous														
11														
575000	Misc Oper SS	100	100	100	100	100	100	100	100	100	100	100	100	1,200
14														
520100	M & S Oper TD	250	250	250	250	250	250	250	250	250	250	250	250	3,000
535000	Contr Svc-Other Oper	417	417	417	417	417	417	417	417	417	417	417	417	5,004
575820	Uniforms TD	150	150	150	150	150	150	150	150	150	150	150	150	1,800
16														
507100	401k Oper AG	410	395	393	379	428	379	412	411	381	411	429	413	4,841
508101	DCP Oper AG	407	389	407	394	432	394	413	432	375	432	413	394	4,882
550002	Trans Oper AG Lease					2,439	441							2,880
550003	Trans Oper AG Lease	99	99	99	99	99	99	99	99	99	99	99	99	1,188
P21 Miscellaneous		1,833	1,800	1,816	1,789	4,315	2,230	1,841	1,859	1,772	1,859	1,858	1,823	24,795
P25 Maintenance Expense														
21														
620000	Mat and Sup Maint SS	292	292	2,792	292	292	292	1,542	292	292	2,792	292	1,542	11,004
24														
620000	Mat and Sup Maint TD	300	300	300	300	300	300	300	300	300	300	300	300	3,600
P25 Maintenance Expense		592	592	3,092	592	592	592	1,842	592	592	3,092	592	1,842	14,604
P29 General Taxes														
685320 FUTA		176	98											274
685325 FICA		1,687	1,622	1,616	1,559	1,760	1,559	1,695	1,689	1,564	1,689	1,766	1,700	19,906
685350 SUTA		309	240											549
P29 General Taxes		2,172	1,960	1,616	1,559	1,760	1,559	1,695	1,689	1,564	1,689	1,766	1,700	20,729
123201 OWN-Production		77,409	75,658	80,181	75,416	80,705	78,930	80,669	74,827	72,893	77,687	77,763	78,136	930,274

260,208
+ 55,332
+ 1,500
+ 24,795
= 341,835 - 292

Chemicals

NORTHERN DIVISION - OWENTON PLANT

2014 BUDGET
Bid Dollars

		JAN	FEB	MAR	APR	MAY	JUNE	JULY	AUG	SEPT	OCT	NOV	DEC	TOTAL
LOW SERVICE PUMPAGE (MG)		25.045	22.621	25.045	24.237	25.045	24.237	25.045	25.045	24.237	25.045	24.237	25.045	294.880
AMMONIA	LBS/MG	0.00	0.00	0.00	0.00	0.00	0.00	0.00	0.00	0.00	0.00	0.00	0.00	0.0
(Dry Weight)	TOTAL LBS	0	0	0	0	0	0	0	0	0	0	0	0	0
	COST/LB	$0.00000	$0.00000	$0.00000	$0.00000	$0.00000	$0.00000	$0.00000	$0.00000	$0.00000	$0.00000	$0.00000	$0.00000	$0.00000
	TOTAL COST	$0	$0	$0	$0	$0	$0	$0	$0	$0	$0	$0	$0	$0
	COST/MG	$0.00	$0.00	$0.00	$0.00	$0.00	$0.00	$0.00	$0.00	$0.00	$0.00	$0.00	$0.00	$0.00
CARBON	LBS/MG	63.89	118.16	144.74	124.93	141.83	171.48	158.00	126.85	133.14	128.85	133.14	128.85	131.3
(Dry Weight)	TOTAL LBS	1,600	2,673	3,625	3,028	3,552	4,156	3,957	3,227	3,227	3,227	3,227	3,227	38,726
	COST/LB	$0.86700	$0.86700	$0.86700	$0.86700	$0.86700	$0.86700	$0.86700	$0.86700	$0.86700	$0.86700	$0.86700	$0.86700	$0.86700
	TOTAL COST	$1,387	$2,317	$3,143	$2,625	$3,080	$3,603	$3,431	$2,798	$2,798	$2,798	$2,798	$2,798	$33,576
	COST/MG	$55.39	$102.45	$125.49	$108.32	$122.96	$148.67	$136.98	$111.71	$115.44	$111.71	$115.44	$111.71	$113.86
CHLORINE	LBS/MG	31.10	41.16	29.91	26.86	30.94	38.87	40.85	28.49	28.98	34.58	30.81	20.46	31.8
(Dry Weight)	TOTAL LBS	779	931	749	651	775	942	1,023	713	702	866	747	512	9,391
	COST/LB	$0.49450	$0.49450	$0.49450	$0.49450	$0.49450	$0.49450	$0.49450	$0.49450	$0.49450	$0.49450	$0.49450	$0.49450	$0.49450
	TOTAL COST	$385	$460	$370	$322	$383	$466	$506	$353	$347	$428	$369	$253	$4,644
	COST/MG	$15.38	$20.35	$14.79	$13.28	$15.30	$19.22	$20.20	$14.09	$14.33	$17.10	$15.24	$10.12	$15.75
COPPER SULFATE	LBS/MG	2.00	2.21	2.00	2.06	2.00	2.06	2.00	2.00	2.06	2.00	2.06	2.00	2.0
(Dry Weight)	TOTAL LBS	50	50	50	50	50	50	50	50	50	50	50	50	600
	COST/LB	$1.78255	$1.78255	$1.78255	$1.78255	$1.78255	$1.78255	$1.78255	$1.78255	$1.78255	$1.78255	$1.78255	$1.78255	$1.78255
	TOTAL COST	$89	$89	$89	$89	$89	$89	$89	$89	$89	$89	$89	$89	$1,070
	COST/MG	$3.56	$3.94	$3.56	$3.68	$3.56	$3.68	$3.56	$3.56	$3.68	$3.56	$3.68	$3.56	$3.63
CORROSION INHIBITOR	LBS/MG	0.00	0.00	0.00	0.00	0.00	0.00	0.00	0.00	0.00	0.00	0.00	0.00	0.0
(Wet Weight)	TOTAL LBS	0	0	0	0	0	0	0	0	0	0	0	0	0
	COST/LB	$0.00000	$0.00000	$0.00000	$0.00000	$0.00000	$0.00000	$0.00000	$0.00000	$0.00000	$0.00000	$0.00000	$0.00000	$0.00000
	TOTAL COST	$0	$0	$0	$0	$0	$0	$0	$0	$0	$0	$0	$0	$0
	COST/MG	$0.00	$0.00	$0.00	$0.00	$0.00	$0.00	$0.00	$0.00	$0.00	$0.00	$0.00	$0.00	$0.00
FERRIC CHLORIDE	LBS/MG	979.49	1180.59	1345.04	1264.77	1378.50	1367.14	1346.92	1323.48	1367.59	1323.48	1367.59	1323.48	1297.8
(Wet Weight)	TOTAL LBS	24,531	26,706	33,686	30,654	34,524	33,135	33,733	33,146	33,146	33,146	33,146	33,146	382,699
	COST/LB	$0.22220	$0.22220	$0.22220	$0.22220	$0.22220	$0.22220	$0.22220	$0.22220	$0.22220	$0.22220	$0.22220	$0.22220	$0.22220
	TOTAL COST	$5,451	$5,934	$7,485	$6,811	$7,671	$7,363	$7,495	$7,365	$7,365	$7,365	$7,365	$7,365	$85,036
	COST/MG	$217.64	$262.33	$298.87	$281.03	$306.30	$303.78	$299.28	$294.08	$303.88	$294.08	$303.88	$294.08	$288.37
FLUORIDE	LBS/MG	42.08	39.30	35.22	43.78	38.33	48.85	26.47	32.86	34.69	29.64	24.91	27.68	35.3
(Wet Weight)	TOTAL LBS	1,054	889	882	1,061	960	1,184	663	823	841	742	604	693	10,396
	COST/LB	$0.42000	$0.42000	$0.42000	$0.42000	$0.42000	$0.42000	$0.42000	$0.42000	$0.42000	$0.42000	$0.42000	$0.42000	$0.42000
	TOTAL COST	$443	$373	$370	$446	$403	$497	$278	$346	$353	$312	$254	$291	$4,366
	COST/MG	$17.68	$16.51	$14.79	$18.39	$16.10	$20.52	$11.12	$13.80	$14.57	$12.45	$10.46	$11.63	$14.81
PACL	LBS/MG	0.00	0.00	0.00	0.00	0.00	0.00	0.00	0.00	0.00	0.00	0.00	0.00	0.0
(Wet Weight)	TOTAL LBS	0	0	0	0	0	0	0	0	0	0	0	0	0
	COST/LB	$0.00000	$0.00000	$0.00000	$0.00000	$0.00000	$0.00000	$0.00000	$0.00000	$0.00000	$0.00000	$0.00000	$0.00000	$0.00000
	TOTAL COST	$0	$0	$0	$0	$0	$0	$0	$0	$0	$0	$0	$0	$0
	COST/MG	$0.00	$0.00	$0.00	$0.00	$0.00	$0.00	$0.00	$0.00	$0.00	$0.00	$0.00	$0.00	$0.00
POLYMERS NO 1	LBS/MG	1.52	1.24	1.76	59.87	3.91	11.39	7.19	3.11	3.06	2.10	6.58	1.21	8.5
(Wet Weight)	TOTAL LBS	38	28	44	1,451	98	276	180	78	74	53	160	30	2,510
	COST/LB	$1.09760	$1.09760	$1.09760	$1.09760	$1.09760	$1.09760	$1.09760	$1.09760	$1.09760	$1.09760	$1.09760	$1.09760	$1.09760
	TOTAL COST	$42	$31	$48	$1,593	$108	$303	$198	$85	$81	$58	$175	$33	$2,755
	COST/MG	$1.67	$1.36	$1.93	$65.71	$4.29	$12.50	$7.89	$3.41	$3.36	$2.30	$7.23	$1.33	$9.34
POLYMERS NO 2	LBS/MG	0.00	0.00	0.00	0.00	0.00	0.00	0.00	0.00	0.00	0.00	0.00	0.00	0.0
(Wet Weight)	TOTAL LBS	0	0	0	0	0	0	0	0	0	0	0	0	0
	COST/LB	$0.00000	$0.00000	$0.00000	$0.00000	$0.00000	$0.00000	$0.00000	$0.00000	$0.00000	$0.00000	$0.00000	$0.00000	$0.00000
	TOTAL COST	$0	$0	$0	$0	$0	$0	$0	$0	$0	$0	$0	$0	$0
	COST/MG	$0.00	$0.00	$0.00	$0.00	$0.00	$0.00	$0.00	$0.00	$0.00	$0.00	$0.00	$0.00	$0.00
POTASSIUM	LBS/MG	0.00	0.00	0.00	0.00	0.00	19.80	0.00	0.00	0.00	0.00	0.00	0.00	1.6
PERMANGANATE	TOTAL LBS	0	0	0	0	0	480	0	0	0	0	0	0	480
(Dry Weight)	COST/LB	$2.51940	$2.51940	$2.51940	$2.51940	$2.51940	$2.51940	$2.51940	$2.51940	$2.51940	$2.51940	$2.51940	$2.51940	$2.51940
	TOTAL COST	$0	$0	$0	$0	$0	$1,209	$0	$0	$0	$0	$0	$0	$1,209
	COST/MG	$0.00	$0.00	$0.00	$0.00	$0.00	$49.90	$0.00	$0.00	$0.00	$0.00	$0.00	$0.00	$4.10
SODIUM CHLORIDE	LBS/MG	0.00	0.00	0.00	0.00	0.00	0.00	0.00	0.00	0.00	0.00	0.00	0.00	0.0
(Dry Weight)	TOTAL LBS	0	0	0	0	0	0	0	0	0	0	0	0	0
	COST/LB	$0.00000	$0.00000	$0.00000	$0.00000	$0.00000	$0.00000	$0.00000	$0.00000	$0.00000	$0.00000	$0.00000	$0.00000	$0.00000
	TOTAL COST	$0	$0	$0	$0	$0	$0	$0	$0	$0	$0	$0	$0	$0
	COST/MG	$0.00	$0.00	$0.00	$0.00	$0.00	$0.00	$0.00	$0.00	$0.00	$0.00	$0.00	$0.00	$0.00
SODIUM HYDROXIDE 30%	LBS/MG	669.41	647.10	651.12	534.85	70.99	14.85	0.00	0.00	0.00	123.38	625.83	605.64	326.4
(Wet Weight)	TOTAL LBS	16,765	14,638	16,307	12,963	1,778	360	0	0	0	3,090	15,168	15,168	96,237
	COST/LB	$0.22800	$0.22800	$0.22800	$0.22800	$0.22800	$0.22800	$0.22800	$0.22800	$0.22800	$0.22800	$0.22800	$0.22800	$0.22800
	TOTAL COST	$3,822	$3,337	$3,718	$2,956	$405	$82	$0	$0	$0	$705	$3,458	$3,458	$21,942
	COST/MG	$152.62	$147.54	$148.45	$121.95	$16.19	$3.39	$0.00	$0.00	$0.00	$28.13	$142.69	$138.09	$74.41
SODIUM HYDROXIDE 50%	LBS/MG	0.00	0.00	0.00	0.00	378.20	476.80	410.87	172.60	213.34	123.38	0.00	0.00	148.9
(Wet Weight)	TOTAL LBS	0	0	0	0	9,472	11,556	10,290	4,323	5,171	3,090	0	0	43,901
	COST/LB	$0.25200	$0.25200	$0.25200	$0.25200	$0.25200	$0.25200	$0.25200	$0.25200	$0.25200	$0.25200	$0.25200	$0.25200	$0.25200
	TOTAL COST	$0	$0	$0	$0	$2,387	$2,912	$2,593	$1,089	$1,303	$779	$0	$0	$11,063
	COST/MG	$0.00	$0.00	$0.00	$0.00	$95.31	$120.15	$103.54	$43.49	$53.76	$31.09	$0.00	$0.00	$37.52
SODIUM	LBS/MG	83.49	113.39	94.31	86.56	58.58	112.27	108.45	91.40	94.44	91.40	94.44	91.40	93.1
PERMANGANATE	TOTAL LBS	2091	2565	2362	2098	1467	2721	2716	2289	2289	2289	2289	2289	27465
(Wet Weight)	COST/LB	$1.27500	$1.27500	$1.27500	$1.27500	$1.27500	$1.27500	$1.27500	$1.27500	$1.27500	$1.27500	$1.27500	$1.27500	$1.27500
	TOTAL COST	$2,666	$3,270	$3,012	$2,675	$1,870	$3,469	$3,463	$2,918	$2,918	$2,918	$2,918	$2,918	$35,018
	COST/MG	$106.45	$144.57	$120.25	$110.37	$74.68	$143.14	$138.27	$116.53	$120.42	$116.53	$120.42	$116.53	$118.75
SULFURIC ACID (38%)	LBS/MG	459.86	301.89	183.03	107.36	206.95	243.31	302.14	251.99	260.39	251.99	260.39	251.99	258.8
(Wet Weight)	TOTAL LBS	11,517	6,829	4,584	2,602	5,183	5,897	7,567	6,311	6,311	6,311	6,311	6,311	75,734
	COST/LB	$0.28560	$0.28560	$0.28560	$0.28560	$0.28560	$0.28560	$0.28560	$0.28560	$0.28560	$0.28560	$0.28560	$0.28560	$0.28560
	TOTAL COST	$3,289	$1,950	$1,309	$743	$1,480	$1,684	$2,161	$1,802	$1,802	$1,802	$1,802	$1,802	$21,630
	COST/MG	$131.34	$86.22	$52.27	$30.66	$59.11	$69.49	$86.29	$71.97	$74.37	$71.97	$74.37	$71.97	$73.35
JDE CORRECTIONSJDE CORRECTIONS		0.00	0.00	0.00	0.00	0.00	0.00	0.00	0.00	0.00	0.00	0.00	0.00	0.00
TOTAL NORTHERN DIVISION	LBS/MG	2332.8	2445.0	2487.1	2251.0	2310.2	2506.8	2402.9	2034.8	2137.7	2110.6	2545.5	2452.7	2333.6
	TOTAL LBS	58,425	55,309	62,289	54,558	57,859	60,757	60,179	50,960	51,811	52,864	61,701	61,427	688,139
	COST/LB	$0.30080	$0.32117	$0.31378	$0.33468	$0.30897	$0.35680	$0.33590	$0.33058	$0.32923	$0.32638	$0.31165	$0.30946	$0.32306
123201.518000.13	TOTAL COST	$17,574	$17,763	$19,545	$18,260	$17,877	$21,678	$20,214	$16,846	$17,058	$17,254	$19,229	$19,009	$222,307
	COST/MG	$701.72	$785.26	$780.40	$753.38	$713.80	$894.43	$807.13	$672.64	$703.80	$688.92	$793.39	$759.01	$753.89

Chemicals

NORTHERN DIVISION - OWENTON PLANT

2015 BUDGET
Bid Dollars

		JAN	FEB	MAR	APR	MAY	JUNE	JULY	AUG	SEPT	OCT	NOV	DEC	TOTAL
LOW SERVICE PUMPAGE (MG)		25.045	22.621	25.045	24.237	25.045	24.237	25.045	25.045	24.237	25.045	24.237	25.045	294.660
AMMONIA	LBS/MG	0.00	0.00	0.00	0.00	0.00	0.00	0.00	0.00	0.00	0.00	0.00	0.00	0.0
(Dry Weight)	TOTAL LBS	0	0	0	0	0	0	0	0	0	0	0	0	0
	COST/LB	$0.00000	$0.00000	$0.00000	$0.00000	$0.00000	$0.00000	$0.00000	$0.00000	$0.00000	$0.00000	$0.00000	$0.00000	$0.00000
	TOTAL COST	$0	$0	$0	$0	$0	$0	$0	$0	$0	$0	$0	$0	$0
	COST/MG	$0.00	$0.00	$0.00	$0.00	$0.00	$0.00	$0.00	$0.00	$0.00	$0.00	$0.00	$0.00	$0.00
CARBON	LBS/MG	63.89	118.16	144.74	124.93	141.83	171.48	158.00	128.85	133.14	128.85	133.14	128.85	131.3
(Dry Weight)	TOTAL LBS	1,600	2,673	3,625	3,028	3,552	4,156	3,957	3,227	3,227	3,227	3,227	3,227	38,726
	COST/LB	$0.86700	$0.86700	$0.86700	$0.86700	$0.86700	$0.86700	$0.86700	$0.86700	$0.86700	$0.86700	$0.86700	$0.86700	$0.86700
	TOTAL COST	$1,387	$2,317	$3,143	$2,625	$3,080	$3,603	$3,431	$2,798	$2,798	$2,798	$2,798	$2,798	$33,575
	COST/MG	$55.39	$102.45	$125.49	$108.32	$122.96	$148.67	$136.98	$111.71	$115.44	$111.71	$115.44	$111.71	$113.86
CHLORINE	LBS/MG	31.10	41.16	29.91	26.66	30.94	38.87	40.85	28.49	28.98	34.58	30.61	20.46	31.8
(Dry Weight)	TOTAL LBS	779	931	749	651	775	942	1,023	713	702	866	747	512	9,391
	COST/LB	$0.49450	$0.49450	$0.49450	$0.49450	$0.49450	$0.49450	$0.49450	$0.49450	$0.49450	$0.49450	$0.49450	$0.49450	$0.49450
	TOTAL COST	$385	$460	$370	$322	$383	$466	$506	$353	$347	$428	$369	$253	$4,644
	COST/MG	$15.38	$20.35	$14.79	$13.28	$15.30	$19.22	$20.20	$14.09	$14.33	$17.10	$15.24	$10.12	$15.75
COPPER SULFATE	LBS/MG	2.00	2.21	2.00	2.06	2.00	2.06	2.00	2.00	2.06	2.00	2.06	2.00	2.0
(Dry Weight)	TOTAL LBS	50	50	50	50	50	50	50	50	50	50	50	50	600
	COST/LB	$1.78255	$1.78255	$1.78255	$1.78255	$1.78255	$1.78255	$1.78255	$1.78255	$1.78255	$1.78255	$1.78255	$1.78255	$1.78255
	TOTAL COST	$89	$89	$89	$89	$89	$89	$89	$89	$89	$89	$89	$89	$1,070
	COST/MG	$3.56	$3.94	$3.56	$3.68	$3.56	$3.68	$3.56	$3.56	$3.68	$3.56	$3.68	$3.56	$3.63
CORROSION INHIBITOR	LBS/MG	0.00	0.00	0.00	0.00	0.00	0.00	0.00	0.00	0.00	0.00	0.00	0.00	0.0
(Wet Weight)	TOTAL LBS	0	0	0	0	0	0	0	0	0	0	0	0	0
	COST/LB	$0.00000	$0.00000	$0.00000	$0.00000	$0.00000	$0.00000	$0.00000	$0.00000	$0.00000	$0.00000	$0.00000	$0.00000	$0.00000
	TOTAL COST	$0	$0	$0	$0	$0	$0	$0	$0	$0	$0	$0	$0	$0
	COST/MG	$0.00	$0.00	$0.00	$0.00	$0.00	$0.00	$0.00	$0.00	$0.00	$0.00	$0.00	$0.00	$0.00
FERRIC CHLORIDE	LBS/MG	979.49	1180.59	1345.04	1264.77	1378.50	1367.14	1346.92	1323.48	1367.59	1323.48	1367.59	1323.48	1297.8
(Wet Weight)	TOTAL LBS	24,531	26,706	33,686	30,654	34,524	33,135	33,733	33,146	33,146	33,146	33,146	33,146	382,699
	COST/LB	$0.22220	$0.22220	$0.22220	$0.22220	$0.22220	$0.22220	$0.22220	$0.22220	$0.22220	$0.22220	$0.22220	$0.22220	$0.22220
	TOTAL COST	$5,451	$5,934	$7,485	$6,811	$7,671	$7,363	$7,495	$7,365	$7,365	$7,365	$7,365	$7,365	$85,036
	COST/MG	$217.64	$262.33	$298.87	$281.03	$306.30	$303.78	$299.28	$294.08	$303.88	$294.08	$303.88	$294.08	$288.37
FLUORIDE	LBS/MG	42.08	39.30	35.22	43.78	38.33	48.85	26.47	32.66	34.69	29.64	24.91	27.68	35.3
(Wet Weight)	TOTAL LBS	1,054	889	882	1,061	960	1,184	663	823	841	742	604	693	10,396
	COST/LB	$0.42000	$0.42000	$0.42000	$0.42000	$0.42000	$0.42000	$0.42000	$0.42000	$0.42000	$0.42000	$0.42000	$0.42000	$0.42000
	TOTAL COST	$443	$373	$370	$446	$403	$497	$278	$346	$353	$312	$254	$291	$4,366
	COST/MG	$17.68	$16.51	$14.79	$18.39	$16.10	$20.52	$11.12	$13.80	$14.57	$12.45	$10.46	$11.63	$14.81
PACL	LBS/MG	0.00	0.00	0.00	0.00	0.00	0.00	0.00	0.00	0.00	0.00	0.00	0.00	0.0
(Wet Weight)	TOTAL LBS	0	0	0	0	0	0	0	0	0	0	0	0	0
	COST/LB	$0.00000	$0.00000	$0.00000	$0.00000	$0.00000	$0.00000	$0.00000	$0.00000	$0.00000	$0.00000	$0.00000	$0.00000	$0.00000
	TOTAL COST	$0	$0	$0	$0	$0	$0	$0	$0	$0	$0	$0	$0	$0
	COST/MG	$0.00	$0.00	$0.00	$0.00	$0.00	$0.00	$0.00	$0.00	$0.00	$0.00	$0.00	$0.00	$0.00
POLYMERS NO 1	LBS/MG	1.52	1.24	1.76	59.87	3.91	11.39	7.19	3.11	3.06	2.10	6.58	1.21	8.5
(Wet Weight)	TOTAL LBS	38	28	44	1,451	98	276	180	78	74	53	160	30	2,510
	COST/LB	$1.09760	$1.09760	$1.09760	$1.09760	$1.09760	$1.09760	$1.09760	$1.09760	$1.09760	$1.09760	$1.09760	$1.09760	$1.09760
	TOTAL COST	$42	$31	$48	$1,593	$108	$303	$198	$85	$81	$58	$175	$33	$2,755
	COST/MG	$1.67	$1.36	$1.93	$65.71	$4.29	$12.50	$7.89	$3.41	$3.36	$2.30	$7.23	$1.33	$9.34
POLYMERS NO 2	LBS/MG	0.00	0.00	0.00	0.00	0.00	0.00	0.00	0.00	0.00	0.00	0.00	0.00	0.0
(Wet Weight)	TOTAL LBS	0	0	0	0	0	0	0	0	0	0	0	0	0
	COST/LB	$0.00000	$0.00000	$0.00000	$0.00000	$0.00000	$0.00000	$0.00000	$0.00000	$0.00000	$0.00000	$0.00000	$0.00000	$0.00000
	TOTAL COST	$0	$0	$0	$0	$0	$0	$0	$0	$0	$0	$0	$0	$0
	COST/MG	$0.00	$0.00	$0.00	$0.00	$0.00	$0.00	$0.00	$0.00	$0.00	$0.00	$0.00	$0.00	$0.00
POTASSIUM	LBS/MG	0.00	0.00	0.00	0.00	0.00	19.80	0.00	0.00	0.00	0.00	0.00	0.00	1.6
PERMANGANATE	TOTAL LBS	0	0	0	0	0	480	0	0	0	0	0	0	480
(Dry Weight)	COST/LB	$2.51940	$2.51940	$2.51940	$2.51940	$2.51940	$2.51940	$2.51940	$2.51940	$2.51940	$2.51940	$2.51940	$2.51940	$2.51940
	TOTAL COST	$0	$0	$0	$0	$0	$1,209	$0	$0	$0	$0	$0	$0	$1,209
	COST/MG	$0.00	$0.00	$0.00	$0.00	$0.00	$49.90	$0.00	$0.00	$0.00	$0.00	$0.00	$0.00	$4.10
SODIUM CHLORIDE	LBS/MG	0.00	0.00	0.00	0.00	0.00	0.00	0.00	0.00	0.00	0.00	0.00	0.00	0.0
(Dry Weight)	TOTAL LBS	0	0	0	0	0	0	0	0	0	0	0	0	0
	COST/LB	$0.00000	$0.00000	$0.00000	$0.00000	$0.00000	$0.00000	$0.00000	$0.00000	$0.00000	$0.00000	$0.00000	$0.00000	$0.00000
	TOTAL COST	$0	$0	$0	$0	$0	$0	$0	$0	$0	$0	$0	$0	$0
	COST/MG	$0.00	$0.00	$0.00	$0.00	$0.00	$0.00	$0.00	$0.00	$0.00	$0.00	$0.00	$0.00	$0.00
SODIUM HYDROXIDE 30%	LBS/MG	669.41	647.10	651.12	534.65	70.99	14.85	0.00	0.00	0.00	123.38	625.83	605.64	326.4
(Wet Weight)	TOTAL LBS	16,765	14,638	16,307	12,963	1,778	360	0	0	0	3,090	15,168	15,168	96,237
	COST/LB	$0.22800	$0.22800	$0.22800	$0.22800	$0.22800	$0.22800	$0.22800	$0.22800	$0.22800	$0.22800	$0.22800	$0.22800	$0.22800
	TOTAL COST	$3,822	$3,337	$3,718	$2,956	$405	$82	$0	$0	$0	$705	$3,458	$3,458	$21,942
	COST/MG	$152.62	$147.54	$148.45	$121.95	$16.19	$3.39	$0.00	$0.00	$0.00	$28.13	$142.69	$138.09	$74.41
SODIUM HYDROXIDE 50%	LBS/MG	0.00	0.00	0.00	0.00	378.20	476.80	410.87	172.60	213.34	123.38	0.00	0.00	148.9
(Wet Weight)	TOTAL LBS	0	0	0	0	9,472	11,556	10,290	4,323	5,171	3,090	0	0	43,901
	COST/LB	$0.25200	$0.25200	$0.25200	$0.25200	$0.25200	$0.25200	$0.25200	$0.25200	$0.25200	$0.25200	$0.25200	$0.25200	$0.25200
	TOTAL COST	$0	$0	$0	$0	$2,387	$2,912	$2,593	$1,089	$1,303	$779	$0	$0	$11,063
	COST/MG	$0.00	$0.00	$0.00	$0.00	$95.31	$120.15	$103.54	$43.49	$53.76	$31.09	$0.00	$0.00	$37.52
SODIUM	LBS/MG	83.49	113.39	94.31	86.56	58.58	112.27	108.45	91.40	94.44	91.40	94.44	91.40	93.1
PERMANGANATE	TOTAL LBS	2091	2565	2362	2098	1467	2721	2716	2289	2289	2289	2289	2289	27465
(Wet Weight)	COST/LB	$1.27500	$1.27500	$1.27500	$1.27500	$1.27500	$1.27500	$1.27500	$1.27500	$1.27500	$1.27500	$1.27500	$1.27500	$1.27500
	TOTAL COST	$2,666	$3,270	$3,012	$2,675	$1,870	$3,469	$3,463	$2,918	$2,918	$2,918	$2,918	$2,918	$35,018
	COST/MG	$106.45	$144.57	$120.25	$110.37	$74.68	$143.14	$138.27	$116.53	$120.42	$116.53	$120.42	$116.53	$118.75
SULFURIC ACID (38%)	LBS/MG	459.86	301.89	183.03	107.36	206.95	243.31	302.14	251.99	260.39	251.99	260.39	251.99	256.8
(Wet Weight)	TOTAL LBS	11,517	6,829	4,584	2,602	5,183	5,897	7,567	6,311	6,311	6,311	6,311	6,311	75,734
	COST/LB	$0.28560	$0.28560	$0.28560	$0.28560	$0.28560	$0.28560	$0.28560	$0.28560	$0.28560	$0.28560	$0.28560	$0.28560	$0.28560
	TOTAL COST	$3,289	$1,950	$1,309	$743	$1,480	$1,684	$2,161	$1,802	$1,802	$1,802	$1,802	$1,802	$21,630
	COST/MG	$131.34	$86.22	$52.27	$30.66	$59.11	$69.49	$86.29	$71.97	$74.37	$71.97	$74.37	$71.97	$73.35
JDE CORRECTIONSJDE CORRECTIONS		0.00	0.00	0.00	0.00	0.00	0.00	0.00	0.00	0.00	0.00	0.00	0.00	0.00
TOTAL NORTHERN DIVISION	LBS/MG	2332.8	2445.0	2487.1	2251.0	2310.2	2506.8	2402.9	2034.8	2137.7	2110.8	2545.8	2452.7	2333.6
	TOTAL LBS	58,425	55,309	62,289	54,558	57,859	60,757	60,179	50,960	51,811	52,864	61,701	61,427	688,139
	COST/LB	$0.30080	$0.32117	$0.31378	$0.33468	$0.30897	$0.35580	$0.33590	$0.33058	$0.32923	$0.32638	$0.31165	$0.30946	$0.32306
123201.518000.13	TOTAL COST	$17,574	$17,763	$19,545	$18,260	$17,877	$21,678	$20,214	$16,846	$17,058	$17,254	$19,229	$19,009	$222,307
	COST/MG	$701.72	$785.26	$780.40	$753.36	$713.80	$894.43	$807.13	$672.64	$703.80	$688.92	$793.39	$759.01	$753.89

Chemicals

NORTHERN DIVISION - OWENTON PLANT

2016 BUDGET
Bid Dollars

		JAN	FEB	MAR	APR	MAY	JUNE	JULY	AUG	SEPT	OCT	NOV	DEC	TOTAL
LOW SERVICE PUMPAGE (MG)		25.045	23.429	25.045	24.237	25.045	24.237	25.045	25.045	24.237	25.045	24.237	25.045	295.668
AMMONIA	LBS/MG	0.00	0.00	0.00	0.00	0.00	0.00	0.00	0.00	0.00	0.00	0.00	0.00	0.0
(Dry Weight)	TOTAL LBS	0	0	0	0	0	0	0	0	0	0	0	0	0
	COST/LB	$0.00000	$0.00000	$0.00000	$0.00000	$0.00000	$0.00000	$0.00000	$0.00000	$0.00000	$0.00000	$0.00000	$0.00000	$0.00000
	TOTAL COST	$0	$0	$0	$0	$0	$0	$0	$0	$0	$0	$0	$0	$0
	COST/MG	$0.00	$0.00	$0.00	$0.00	$0.00	$0.00	$0.00	$0.00	$0.00	$0.00	$0.00	$0.00	$0.00
CARBON	LBS/MG	63.89	114.09	144.74	124.93	141.83	171.48	158.00	128.85	133.14	128.85	133.14	128.85	131.0
(Dry Weight)	TOTAL LBS	1,600	2,673	3,625	3,028	3,552	4,156	3,957	3,227	3,227	3,227	3,227	3,227	38,726
	COST/LB	$0.86700	$0.86700	$0.86700	$0.86700	$0.86700	$0.86700	$0.86700	$0.86700	$0.86700	$0.86700	$0.86700	$0.86700	$0.86700
	TOTAL COST	$1,387	$2,317	$3,143	$2,625	$3,080	$3,603	$3,431	$2,798	$2,798	$2,798	$2,798	$2,798	$33,575
	COST/MG	$55.39	$98.92	$125.49	$108.32	$122.96	$148.67	$136.98	$111.71	$115.44	$111.71	$115.44	$111.71	$113.55
CHLORINE	LBS/MG	31.10	39.74	29.91	26.86	30.94	38.87	40.65	28.49	28.98	34.58	30.81	20.46	31.8
(Dry Weight)	TOTAL LBS	779	931	749	651	775	942	1,023	713	702	866	747	512	9,391
	COST/LB	$0.49450	$0.49450	$0.49450	$0.49450	$0.49450	$0.49450	$0.49450	$0.49450	$0.49450	$0.49450	$0.49450	$0.49450	$0.49450
	TOTAL COST	$385	$460	$370	$322	$383	$466	$506	$353	$347	$428	$369	$253	$4,644
	COST/MG	$15.38	$19.65	$14.79	$13.28	$15.30	$19.22	$20.20	$14.09	$14.33	$17.10	$15.24	$10.12	$15.71
COPPER SULFATE	LBS/MG	2.00	2.13	2.00	2.06	2.00	2.06	2.00	2.00	2.06	2.00	2.06	2.00	2.0
(Dry Weight)	TOTAL LBS	50	50	50	50	50	50	50	50	50	50	50	50	600
	COST/LB	$1.78255	$1.78255	$1.78255	$1.78255	$1.78255	$1.78255	$1.78255	$1.78255	$1.78255	$1.78255	$1.78255	$1.78255	$1.78255
	TOTAL COST	$89	$89	$89	$89	$89	$89	$89	$89	$89	$89	$89	$89	$1,070
	COST/MG	$3.56	$3.80	$3.56	$3.66	$3.56	$3.68	$3.56	$3.56	$3.68	$3.56	$3.68	$3.56	$3.62
CORROSION INHIBITOR	LBS/MG	0.00	0.00	0.00	0.00	0.00	0.00	0.00	0.00	0.00	0.00	0.00	0.00	0.0
(Wet Weight)	TOTAL LBS	0	0	0	0	0	0	0	0	0	0	0	0	0
	COST/LB	$0.00000	$0.00000	$0.00000	$0.00000	$0.00000	$0.00000	$0.00000	$0.00000	$0.00000	$0.00000	$0.00000	$0.00000	$0.00000
	TOTAL COST	$0	$0	$0	$0	$0	$0	$0	$0	$0	$0	$0	$0	$0
	COST/MG	$0.00	$0.00	$0.00	$0.00	$0.00	$0.00	$0.00	$0.00	$0.00	$0.00	$0.00	$0.00	$0.00
FERRIC CHLORIDE	LBS/MG	979.49	1139.88	1345.04	1264.77	1378.50	1367.14	1346.92	1323.48	1367.59	1323.48	1367.59	1323.48	1294.3
(Wet Weight)	TOTAL LBS	24,531	26,706	33,686	30,654	34,524	33,135	33,733	33,146	33,146	33,146	33,146	33,146	382,699
	COST/LB	$0.22220	$0.22220	$0.22220	$0.22220	$0.22220	$0.22220	$0.22220	$0.22220	$0.22220	$0.22220	$0.22220	$0.22220	$0.22220
	TOTAL COST	$5,451	$5,934	$7,485	$6,811	$7,671	$7,363	$7,495	$7,365	$7,365	$7,365	$7,365	$7,365	$85,036
	COST/MG	$217.64	$253.28	$298.87	$281.03	$306.30	$303.78	$299.28	$294.08	$303.88	$294.08	$303.88	$294.08	$287.59
FLUORIDE	LBS/MG	42.08	37.94	35.22	43.78	38.33	48.85	26.47	52.86	34.69	29.64	24.91	27.68	35.2
(Wet Weight)	TOTAL LBS	1,054	889	882	1,061	960	1,184	663	623	841	742	604	693	10,396
	COST/LB	$0.42000	$0.42000	$0.42000	$0.42000	$0.42000	$0.42000	$0.42000	$0.42000	$0.42000	$0.42000	$0.42000	$0.42000	$0.42000
	TOTAL COST	$443	$373	$370	$446	$403	$497	$278	$346	$353	$312	$254	$291	$4,366
	COST/MG	$17.68	$15.94	$14.79	$18.39	$16.10	$20.52	$11.12	$13.80	$14.57	$12.45	$10.46	$11.63	$14.77
PACL	LBS/MG	0.00	0.00	0.00	0.00	0.00	0.00	0.00	0.00	0.00	0.00	0.00	0.00	0.0
(Wet Weight)	TOTAL LBS	0	0	0	0	0	0	0	0	0	0	0	0	0
	COST/LB	$0.00000	$0.00000	$0.00000	$0.00000	$0.00000	$0.00000	$0.00000	$0.00000	$0.00000	$0.00000	$0.00000	$0.00000	$0.00000
	TOTAL COST	$0	$0	$0	$0	$0	$0	$0	$0	$0	$0	$0	$0	$0
	COST/MG	$0.00	$0.00	$0.00	$0.00	$0.00	$0.00	$0.00	$0.00	$0.00	$0.00	$0.00	$0.00	$0.00
POLYMERS NO 1	LBS/MG	1.52	1.20	1.76	59.67	3.91	11.39	7.19	3.11	3.06	2.10	6.58	1.21	8.5
(Wet Weight)	TOTAL LBS	38	28	44	1,451	98	276	180	78	74	53	160	30	2,510
	COST/LB	$1.09760	$1.09760	$1.09760	$1.09760	$1.09760	$1.09760	$1.09760	$1.09760	$1.09760	$1.09760	$1.09760	$1.09760	$1.09760
	TOTAL COST	$42	$31	$48	$1,593	$108	$303	$198	$85	$81	$58	$175	$33	$2,755
	COST/MG	$1.67	$1.31	$1.93	$65.71	$4.29	$12.50	$7.89	$3.41	$3.36	$2.30	$7.23	$1.33	$9.32
POLYMERS NO 2	LBS/MG	0.00	0.00	0.00	0.00	0.00	0.00	0.00	0.00	0.00	0.00	0.00	0.00	0.0
(Wet Weight)	TOTAL LBS	0	0	0	0	0	0	0	0	0	0	0	0	0
	COST/LB	$0.00000	$0.00000	$0.00000	$0.00000	$0.00000	$0.00000	$0.00000	$0.00000	$0.00000	$0.00000	$0.00000	$0.00000	$0.00000
	TOTAL COST	$0	$0	$0	$0	$0	$0	$0	$0	$0	$0	$0	$0	$0
	COST/MG	$0.00	$0.00	$0.00	$0.00	$0.00	$0.00	$0.00	$0.00	$0.00	$0.00	$0.00	$0.00	$0.00
POTASSIUM	LBS/MG	0.00	0.00	0.00	0.00	0.00	19.80	0.00	0.00	0.00	0.00	0.00	0.00	1.6
PERMANGANATE	TOTAL LBS	0	0	0	0	0	480	0	0	0	0	0	0	480
(Dry Weight)	COST/LB	$2.51940	$2.51940	$2.51940	$2.51940	$2.51940	$2.51940	$2.51940	$2.51940	$2.51940	$2.51940	$2.51940	$2.51940	$2.51940
	TOTAL COST	$0	$0	$0	$0	$0	$1,209	$0	$0	$0	$0	$0	$0	$1,209
	COST/MG	$0.00	$0.00	$0.00	$0.00	$0.00	$49.90	$0.00	$0.00	$0.00	$0.00	$0.00	$0.00	$4.09
SODIUM CHLORIDE	LBS/MG	0.00	0.00	0.00	0.00	0.00	0.00	0.00	0.00	0.00	0.00	0.00	0.00	0.0
(Dry Weight)	TOTAL LBS	0	0	0	0	0	0	0	0	0	0	0	0	0
	COST/LB	$0.00000	$0.00000	$0.00000	$0.00000	$0.00000	$0.00000	$0.00000	$0.00000	$0.00000	$0.00000	$0.00000	$0.00000	$0.00000
	TOTAL COST	$0	$0	$0	$0	$0	$0	$0	$0	$0	$0	$0	$0	$0
	COST/MG	$0.00	$0.00	$0.00	$0.00	$0.00	$0.00	$0.00	$0.00	$0.00	$0.00	$0.00	$0.00	$0.00
SODIUM HYDROXIDE 30%	LBS/MG	669.41	624.79	651.12	534.85	70.99	14.85	0.00	0.00	0.00	123.36	625.83	605.64	325.5
(Wet Weight)	TOTAL LBS	16,765	14,638	16,307	12,963	1,778	360	0	0	0	3,090	15,168	15,168	96,237
	COST/LB	$0.22800	$0.22800	$0.22800	$0.22800	$0.22800	$0.22800	$0.22800	$0.22800	$0.22800	$0.22800	$0.22800	$0.22800	$0.22800
	TOTAL COST	$3,822	$3,337	$3,718	$2,956	$405	$82	$0	$0	$0	$705	$3,458	$3,458	$21,942
	COST/MG	$152.62	$142.45	$148.45	$121.95	$16.19	$3.39	$0.00	$0.00	$0.00	$28.13	$142.69	$138.09	$74.21
SODIUM HYDROXIDE 50%	LBS/MG	0.00	0.00	0.00	0.00	378.20	476.80	410.87	172.60	213.34	123.38	0.00	0.00	148.5
(Wet Weight)	TOTAL LBS	0	0	0	0	9,472	11,556	10,290	4,323	5,171	3,090	0	0	43,901
	COST/LB	$0.25200	$0.25200	$0.25200	$0.25200	$0.25200	$0.25200	$0.25200	$0.25200	$0.25200	$0.25200	$0.25200	$0.25200	$0.25200
	TOTAL COST	$0	$0	$0	$0	$2,387	$2,912	$2,593	$1,089	$1,303	$779	$0	$0	$11,063
	COST/MG	$0.00	$0.00	$0.00	$0.00	$95.31	$120.15	$103.54	$43.49	$53.76	$31.09	$0.00	$0.00	$37.41
SODIUM	LBS/MG	83.49	109.48	94.31	86.56	58.58	112.27	108.45	91.40	94.44	91.40	94.44	91.40	92.9
PERMANGANATE	TOTAL LBS	2091	2565	2362	2098	1467	2721	2716	2289	2289	2289	2289	2289	27465
(Wet Weight)	COST/LB	$1.27500	$1.27500	$1.27500	$1.27500	$1.27500	$1.27500	$1.27500	$1.27500	$1.27500	$1.27500	$1.27500	$1.27500	$1.27500
	TOTAL COST	$2,666	$3,270	$3,012	$2,675	$1,870	$3,469	$3,463	$2,918	$2,918	$2,918	$2,918	$2,918	$35,018
	COST/MG	$106.45	$139.59	$120.25	$110.37	$74.68	$143.14	$138.27	$116.53	$120.42	$116.53	$120.42	$116.53	$118.43
SULFURIC ACID (36%)	LBS/MG	459.86	291.48	183.03	107.36	206.95	243.31	302.14	251.99	260.39	251.99	260.39	251.99	256.1
(Wet Weight)	TOTAL LBS	11,517	6,829	4,584	2,602	5,183	5,897	7,567	6,311	6,311	6,311	6,311	6,311	75,734
	COST/LB	$0.28560	$0.28560	$0.28560	$0.28560	$0.28560	$0.28560	$0.28560	$0.28560	$0.28560	$0.28560	$0.28560	$0.28560	$0.28560
	TOTAL COST	$3,289	$1,950	$1,309	$743	$1,480	$1,684	$2,161	$1,802	$1,802	$1,802	$1,802	$1,802	$21,630
	COST/MG	$131.34	$83.25	$52.27	$30.66	$59.11	$69.49	$86.29	$71.97	$74.37	$71.97	$74.37	$71.97	$73.15
JDE CORRECTIONSJDE CORRECTIONS		0.00	0.00	0.00	0.00	0.00	0.00	0.00	0.00	0.00	0.00	0.00	0.00	0.00
TOTAL NORTHERN DIVISION	LBS/MG	2332.8	2360.7	2487.1	2251.0	2310.2	2506.8	2402.9	2034.8	2137.7	2110.8	2545.8	2452.7	2327.2
	TOTAL LBS	58,425	55,309	62,289	54,558	57,859	60,757	60,179	50,960	51,811	52,864	61,701	61,427	688,139
	COST/LB	$0.30080	$0.32117	$0.31378	$0.33468	$0.30897	$0.35680	$0.33590	$0.33058	$0.32923	$0.32638	$0.31165	$0.30946	$0.32306
123201.518000.13	TOTAL COST	$17,574	$17,763	$19,545	$18,260	$17,877	$21,678	$20,214	$16,848	$17,058	$17,254	$19,229	$19,009	$222,307
	COST/MG	$701.72	$758.16	$780.40	$753.38	$713.80	$894.43	$807.13	$672.64	$703.80	$688.92	$793.39	$759.01	$751.83

Jan-14	Feb-14	Mar-14	Apr-14	May-14	Jun-14	Jul-14	Aug-14	Sep-14	Oct-14	Nov-14	Dec-14	
$ 10,365	$ 9,474	$ 10,371	$ 10,076	$ 10,373	$ 10,074	$ 10,371	$ 11,174	$ 10,849	$ 11,173	$ 10,848	$ 11,172	**$126,320**

Jan-15	Feb-15	Mar-15	Apr-15	May-15	Jun-15	Jul-15	Aug-15	Sep-15	Oct-15	Nov-15	Dec-15	
$ 11,456	$ 10,460	$ 11,456	$ 11,124	$ 11,457	$ 11,124	$ 11,457	$ 11,457	$ 11,125	$ 11,457	$ 11,125	$ 11,458	**$135,156**

Jan-16	Feb-16	Mar-16	Apr-16	May-16	Jun-16	Jul-16	Aug-16	Sep-16	Oct-16	Nov-16	Dec-16	
$ 11,743	$ 10,722	$ 11,744	$ 11,403	$ 11,743	$ 11,402	$ 11,742	$ 11,742	$ 11,402	$ 11,742	$ 11,402	$ 11,742	**$138,529**

Owenton Sludge

American Water Works Company
Kentucky American Water-Co 12
Total Company 2012 Budget
12 Month AI Total Co.

		January	February	March	April	May	June	July	August	September	October	November	December	Total
123201 OWN-Production														
P08 Labor														
501200 Labor		18,656	17,808	18,656	17,907	19,613	17,907	18,760	19,613	17,055	19,613	18,760	17,907	222,255
501210 Labor NS OT		2,469	2,469	2,469	2,469	2,469	2,469	2,469	2,469	2,469	2,469	2,469	2,469	29,628
501211 Labor OT		925	925			925		925		925		1,850	1,850	8,325
P08 Labor		22,050	21,202	21,125	20,376	23,007	20,376	22,154	22,082	20,449	22,082	23,079	22,226	260,208
P09 Purchased Water														
11														
510100	Purchased Water-Outs	17,409	17,409	17,409	17,409	17,409	17,409	17,409	17,409	17,409	17,409	17,409	17,409	208,908
P09 Purchased Water		17,409	17,409	17,409	17,409	17,409	17,409	17,409	17,409	17,409	17,409	17,409	17,409	208,908
P10 Fuel & Power														
13														
515100	Purch Power WT	9,750	8,922	9,747	9,471	9,747	9,468	9,749	9,748	9,469	9,742	9,467	9,742	115,022
P10 Fuel & Power		9,750	8,922	9,747	9,471	9,747	9,468	9,749	9,748	9,469	9,742	9,467	9,742	115,022
P11 Chemicals														
13														
518000	Chemicals WT	15,817	15,987	17,590	16,434	16,089	19,510	18,193	15,162	15,352	15,528	17,306	17,108	200,076
P11 Chemicals		15,817	15,987	17,590	16,434	16,089	19,510	18,193	15,162	15,352	15,528	17,306	17,108	200,076
P12 Waste Disposal														
13														
511100	Waste Disposal Exp W	3,050	3,050	3,050	3,050	3,050	3,050	3,050	1,550	1,550	1,550	1,550	1,550	29,100
P12 Waste Disposal		3,050	3,050	3,050	3,050	3,050	3,050	3,050	1,550	1,550	1,550	1,550	1,550	29,100
P14 Group Insurance														
504100 Group Insurance		4,611	4,611	4,611	4,611	4,611	4,611	4,611	4,611	4,611	4,611	4,611	4,611	55,332
P14 Group Insurance		4,611	4,611	4,611	4,611	4,611	4,611	4,611	4,611	4,611	4,611	4,611	4,611	55,332
P20 General Office Exp														
16														
575741	Cell Phone AG	45	45	45	45	45	45	45	45	45	45	45	45	540
575780	Trash Removal AG	80	80	80	80	80	80	80	80	80	80	80	80	960
P20 General Office Exp		125	125	125	125	125	125	125	125	125	125	125	125	1,500
P21 Miscellaneous														
11														
575000	Misc Oper SS	100	100	100	100	100	100	100	100	100	100	100	100	1,200
14														
520100	M & S Oper TD	250	250	250	250	250	250	250	250	250	250	250	250	3,000
535000	Contr Svc-Other Oper	417	417	417	417	417	417	417	417	417	417	417	417	5,004
575820	Uniforms TD	150	150	150	150	150	150	150	150	150	150	150	150	1,800
16														
507100	401k Oper AG	410	395	393	379	428	379	412	411	381	411	429	413	4,841
508101	DCP Oper AG	407	389	407	394	432	394	413	432	375	432	413	394	4,882
550002	Trans Oper AG Lease					2,439	441							2,880
550003	Trans Oper AG Lease	99	99	99	99	99	99	99	99	99	99	99	99	1,188
P21 Miscellaneous		1,833	1,800	1,816	1,789	4,315	2,230	1,841	1,859	1,772	1,859	1,858	1,823	24,795
P25 Maintenance Expense														
21														
620000	Mat and Sup Maint SS	292	292	2,792	292	292	292	1,542	292	292	2,792	292	1,542	11,004
24														
620000	Mat and Sup Maint TD	300	300	300	300	300	300	300	300	300	300	300	300	3,600
P25 Maintenance Expense		592	592	3,092	592	592	592	1,842	592	592	3,092	592	1,842	14,604
P29 General Taxes														
685320 FUTA		176	98											274
685325 FICA		1,687	1,622	1,616	1,559	1,760	1,559	1,695	1,689	1,564	1,689	1,766	1,700	19,906
685350 SUTA		309	240											549
P29 General Taxes		2,172	1,960	1,616	1,559	1,760	1,559	1,695	1,689	1,564	1,689	1,766	1,700	20,729
123201 OWN-Production		77,409	75,658	80,181	75,416	80,705	78,930	80,669	74,827	72,893	77,687	77,763	78,136	930,274

Chemicals

KENTUCKY RIVER POOL 3 PLANT

2014 BUDGET

		JAN	FEB	MAR	APR	MAY	JUN	JUL	AUG	SEP	OCT	NOV	DEC	TOTAL
LOW SERVICE PUMPAGE (MG)		183.442	165.690	183.442	177.525	183.442	370.486	382.836	382.836	177.525	183.442	177.525	183.442	2,751.632
AMMONIA	LBS/MG	50.82	48.94	51.84	10.67	37.33	55.64	48.52	74.93	45.77	51.56	40.65	49.39	31.4
(Dry Weight)	TOTAL LBS	9,322	8,108	9,509	1,894	6,848	20,615	18,575	28,684	8,125	9,459	7,217	9,061	137,417
	COST/LB	$0.15300	$0.15300	$0.15300	$0.15300	$0.15300	$0.15300	$0.15300	$0.15300	$0.15300	$0.15300	$0.15300	$0.15300	$0.15300
	TOTAL COST	$1,426	$1,241	$1,455	$290	$1,048	$3,154	$2,842	$4,389	$1,243	$1,447	$1,104	$1,386	$21,025
	COST/MG	$7.77	$7.49	$7.93	$1.63	$5.71	$8.51	$7.42	$11.46	$7.00	$7.89	$6.22	$7.56	$4.80
CARBON	LBS/MG	0.00	0.00	0.00	0.00	0.00	0.00	0.00	0.00	0.00	0.00	0.00	0.00	0.0
(Dry Weight)	TOTAL LBS	0	0	0	0	0	0	0	0	0	0	0	0	0
	COST/LB	$0.93738	$0.93738	$0.93738	$0.93738	$0.93738	$0.93738	$0.93738	$0.93738	$0.93738	$0.93738	$0.93738	$0.93738	$0.00000
	TOTAL COST	$0	$0	$0	$0	$0	$0	$0	$0	$0	$0	$0	$0	$0
	COST/MG	$0.00	$0.00	$0.00	$0.00	$0.00	$0.00	$0.00	$0.00	$0.00	$0.00	$0.00	$0.00	$0.00
CHLORINE	LBS/MG	45.40	44.94	46.15	43.00	48.62	53.04	54.59	84.30	48.28	24.84	103.37	50.33	35.2
(Dry Weight)	TOTAL LBS	8,328	7,446	8,467	7,633	8,918	19,652	20,900	32,274	8,571	4,557	18,350	9,232	154,330
	COST/LB	$0.21735	$0.21735	$0.21735	$0.21735	$0.21735	$0.21735	$0.21735	$0.21735	$0.21735	$0.21735	$0.21735	$0.21735	$0.21735
	TOTAL COST	$1,810	$1,618	$1,840	$1,659	$1,938	$4,271	$4,543	$7,015	$1,863	$991	$3,988	$2,007	$33,544
	COST/MG	$9.87	$9.77	$10.03	$9.35	$10.57	$11.53	$11.87	$18.32	$10.49	$5.40	$22.47	$10.94	$7.66
COPPER SULFATE	LBS/MG	0.00	0.00	0.00	0.00	0.00	0.00	0.00	0.00	0.00	0.00	0.00	0.00	0.0
(Dry Weight)	TOTAL LBS	0	0	0	0	0	0	0	0	0	0	0	0	0
	COST/LB	$0.00000	$0.00000	$0.00000	$0.00000	$0.00000	$0.00000	$0.00000	$0.00000	$0.00000	$0.00000	$0.00000	$0.00000	$0.00000
	TOTAL COST	$0	$0	$0	$0	$0	$0	$0	$0	$0	$0	$0	$0	$0
	COST/MG	$0.00	$0.00	$0.00	$0.00	$0.00	$0.00	$0.00	$0.00	$0.00	$0.00	$0.00	$0.00	$0.00
CORROSION INHIBITOR	LBS/MG	22.12	22.27	19.54	20.36	19.99	22.62	18.79	29.01	33.95	26.73	29.43	25.07	15.1
(Wet Weight)	TOTAL LBS	4,057	3,689	3,585	3,614	3,667	8,381	7,192	11,106	6,027	4,903	5,224	4,598	66,044
	COST/LB	$0.42745	$0.42745	$0.42745	$0.42745	$0.42745	$0.42745	$0.42745	$0.42745	$0.42745	$0.42745	$0.42745	$0.42745	$0.42745
	TOTAL COST	$1,734	$1,577	$1,532	$1,545	$1,568	$3,582	$3,074	$4,747	$2,576	$2,096	$2,233	$1,966	$28,230
	COST/MG	$9.45	$9.52	$8.35	$8.70	$8.55	$9.67	$8.03	$12.40	$14.51	$11.42	$12.58	$10.72	$6.44
FERRIC CHLORIDE	LBS/MG	0.00	0.00	0.00	0.00	0.00	0.00	0.00	0.00	0.00	0.00	0.00	0.00	0.0
(Dry Weight)	TOTAL LBS	0	0	0	0	0	0	0	0	0	0	0	0	0
	COST/LB	$0.09595	$0.09595	$0.09595	$0.09595	$0.09595	$0.09595	$0.09595	$0.09595	$0.09595	$0.09595	$0.09595	$0.09595	$0.00000
	TOTAL COST	$0	$0	$0	$0	$0	$0	$0	$0	$0	$0	$0	$0	$0
	COST/MG	$0.00	$0.00	$0.00	$0.00	$0.00	$0.00	$0.00	$0.00	$0.00	$0.00	$0.00	$0.00	$0.00
FLUORIDE	LBS/MG	35.39	31.14	29.46	34.37	32.97	34.80	33.34	51.49	40.39	36.39	36.63	40.79	23.4
(Wet Weight)	TOTAL LBS	6,492	5,159	5,404	6,101	6,048	12,891	12,765	19,712	7,171	6,675	6,503	7,483	102,405
	COST/LB	$0.29000	$0.29000	$0.29000	$0.29000	$0.29000	$0.29000	$0.29000	$0.29000	$0.29000	$0.29000	$0.29000	$0.29000	$0.29000
	TOTAL COST	$1,883	$1,496	$1,567	$1,769	$1,754	$3,739	$3,702	$5,716	$2,080	$1,936	$1,886	$2,170	$29,697
	COST/MG	$10.26	$9.03	$8.54	$9.97	$9.56	$10.09	$9.67	$14.93	$11.71	$10.55	$10.62	$11.83	$6.78
PACL	LBS/MG	235.25	228.99	513.89	490.20	465.76	324.46	523.33	808.14	292.40	496.37	435.04	433.36	291.6
(Wet Weight)	TOTAL LBS	43,155	37,941	94,270	87,023	85,441	120,207	200,351	309,386	51,909	91,056	77,230	79,497	1,277,465
	COST/LB	$0.14994	$0.14994	$0.14994	$0.14994	$0.14994	$0.14994	$0.14994	$0.14994	$0.14994	$0.14994	$0.14994	$0.14994	$0.14994
	TOTAL COST	$6,471	$5,689	$14,135	$13,048	$12,811	$18,024	$30,041	$46,389	$7,783	$13,653	$11,580	$11,920	$191,543
	COST/MG	$35.27	$34.33	$77.05	$73.50	$69.84	$48.65	$78.47	$121.17	$43.84	$74.43	$65.23	$64.98	$43.72
POLYMERS NO 1	LBS/MG	0.00	0.00	0.00	0.00	0.00	0.12	0.00	0.00	5.75	1.76	0.00	0.00	0.3
(Wet Weight)	TOTAL LBS	0	0	0	0	0	46	0	0	1,021	323	0	0	1,390
	COST/LB	$1.07520	$1.07520	$1.07520	$1.07520	$1.07520	$1.07520	$1.07520	$1.07520	$1.07520	$1.07520	$1.07520	$1.07520	$1.07520
	TOTAL COST	$0	$0	$0	$0	$0	$49	$0	$0	$1,098	$348	$0	$0	$1,495
	COST/MG	$0.00	$0.00	$0.00	$0.00	$0.00	$0.13	$0.00	$0.00	$6.18	$1.89	$0.00	$0.00	$0.34
POLYMERS NO 2	LBS/MG	0.00	0.00	0.00	0.00	0.00	0.00	0.00	0.00	0.00	0.00	0.00	0.00	0.0
(Dry Weight)	TOTAL LBS	0	0	0	0	0	0	0	0	0	0	0	0	0
	COST/LB	$0.00000	$0.00000	$0.00000	$0.00000	$0.00000	$0.00000	$0.00000	$0.00000	$0.00000	$0.00000	$0.00000	$0.00000	$0.00000
	TOTAL COST	$0	$0	$0	$0	$0	$0	$0	$0	$0	$0	$0	$0	$0
	COST/MG	$0.00	$0.00	$0.00	$0.00	$0.00	$0.00	$0.00	$0.00	$0.00	$0.00	$0.00	$0.00	$0.00
POTASSIUM	LBS/MG	5.65	3.87	1.85	5.79	5.50	6.33	7.65	11.81	0.00	7.71	1.82	5.32	3.8
PERMANGANATE	TOTAL LBS	1036	641	339	1027	1010	2345	2928	4522	0	1414	324	976	16563
(Dry Weight)	COST/LB	$2.51940	$2.51940	$2.51940	$2.51940	$2.51940	$2.51940	$2.51940	$2.51940	$2.51940	$2.51940	$2.51940	$2.51940	$2.51940
	TOTAL COST	$2,611	$1,615	$855	$2,588	$2,544	$5,908	$7,378	$11,393	$0	$3,563	$815	$2,460	$41,730
	COST/MG	$14.23	$9.75	$4.66	$14.58	$13.87	$15.95	$19.27	$29.76	$0.00	$19.43	$4.59	$13.41	$9.53
SODIUM CHLORIDE	LBS/MG	1.42	2.70	6.43	2.33	4.72	4.47	2.54	3.92	0.00	1.17	0.00	0.94	1.8
(Dry Weight)	TOTAL LBS	261	448	1,179	414	865	1,655	971	1,500	0	214	0	172	7,679
	COST/LB	$0.14280	$0.14280	$0.14280	$0.14280	$0.14280	$0.14280	$0.14280	$0.14280	$0.14280	$0.14280	$0.14280	$0.14280	$0.14280
	TOTAL COST	$37	$64	$168	$59	$124	$236	$139	$214	$0	$31	$0	$25	$1,097
	COST/MG	$0.20	$0.39	$0.92	$0.33	$0.67	$0.64	$0.36	$0.56	$0.00	$0.17	$0.00	$0.13	$0.25
SODIUM HYDROXIDE 25%	LBS/MG	0.00	0.00	43.24	114.83	55.32	10.16	103.63	160.03	0.00	0.00	0.00	34.67	34.1
(Wet Weight)	TOTAL LBS	0	0	7932	20385	10146	3763	39673	61264	0	0	0	6380	149524
	COST/LB	$0.11400	$0.11400	$0.11400	$0.11400	$0.11400	$0.11400	$0.11400	$0.11400	$0.11400	$0.11400	$0.11400	$0.11400	$0.11400
	TOTAL COST	$0	$0	$904	$2,324	$1,157	$429	$4,523	$6,984	$0	$0	$0	$725	$17,046
	COST/MG	$0.00	$0.00	$4.93	$13.09	$6.31	$1.16	$11.81	$18.24	$0.00	$0.00	$0.00	$3.95	$3.89
SODIUM HYDROXIDE 50%	LBS/MG	0.00	0.00	0.00	0.00	0.00	0.00	0.00	0.00	0.00	0.00	0.00	0.00	0.0
(Wet Weight)	TOTAL LBS	0	0	0	0	0	0	0	0	0	0	0	0	0
	COST/LB	$0.00000	$0.00000	$0.00000	$0.00000	$0.00000	$0.00000	$0.00000	$0.00000	$0.00000	$0.00000	$0.00000	$0.00000	$0.00000
	TOTAL COST	$0	$0	$0	$0	$0	$0	$0	$0	$0	$0	$0	$0	$0
	COST/MG	$0.00	$0.00	$0.00	$0.00	$0.00	$0.00	$0.00	$0.00	$0.00	$0.00	$0.00	$0.00	$0.00
SODIUM	LBS/MG	0.00	0.00	0.00	0.00	0.00	0.00	0.00	0.00	0.00	0.00	0.00	0.00	0.0
PERMANGANATE	TOTAL LBS	0	0	0	0	0	0	0	0	0	0	0	0	0
(Wet Weight)	COST/LB	$0.00000	$0.00000	$0.00000	$0.00000	$0.00000	$0.00000	$0.00000	$0.00000	$0.00000	$0.00000	$0.00000	$0.00000	$0.00000
	TOTAL COST	$0	$0	$0	$0	$0	$0	$0	$0	$0	$0	$0	$0	$0
	COST/MG	$0.00	$0.00	$0.00	$0.00	$0.00	$0.00	$0.00	$0.00	$0.00	$0.00	$0.00	$0.00	$0.00
SULFURIC ACID (38%)	LBS/MG	0.00	0.00	0.00	0.00	0.00	0.00	0.00	0.00	0.00	0.00	0.00	0.00	0.0
(Wet Weight)	TOTAL LBS	0	0	0	0	0	0	0	0	0	0	0	0	0
	COST/LB	$0.00000	$0.00000	$0.00000	$0.00000	$0.00000	$0.00000	$0.00000	$0.00000	$0.00000	$0.00000	$0.00000	$0.00000	$0.00000
	TOTAL COST	$0	$0	$0	$0	$0	$0	$0	$0	$0	$0	$0	$0	$0
	COST/MG	$0.00	$0.00	$0.00	$0.00	$0.00	$0.00	$0.00	$0.00	$0.00	$0.00	$0.00	$0.00	$0.00
JDE CORRECTIONSJDE CORRECTIONS		0.00	0.00	0.00	0.00	0.00	0.00	0.00	0.00	0.00	0.00	0.00	0.00	0.00
TOTAL KY RIVER	LBS/MG	396	383	712	722	670	512	792	1224	467	647	647	640	436.6
	TOTAL LBS	72,652	63,432	130,684	128,091	122,944	189,556	303,356	468,448	82,823	118,602	114,849	117,381	1,912,818
	COST/LB	$0.21984	$0.20967	$0.17184	$0.18176	$0.18661	$0.20782	$0.18539	$0.18539	$0.20094	$0.20289	$0.18813	$0.19303	$0.19103
120252.518000.13	TOTAL COST	$15,972	$13,300	$22,457	$23,282	$22,943	$39,393	$56,240	$86,848	$16,643	$24,064	$21,607	$22,658	$365,406
	COST/MG	$87.07	$80.27	$122.42	$131.15	$125.07	$106.33	$146.90	$226.85	$93.75	$131.18	$121.71	$123.52	$132.80

← #133/MG

Chemicals

KENTUCKY RIVER POOL 3 PLANT

2015 BUDGET

LOW SERVICE PUMPAGE (MG)		JAN	FEB	MAR	APR	MAY	JUN	JUL	AUG	SEP	OCT	NOV	DEC	TOTAL
		183.442	**165.690**	**183.442**	**177.525**	**183.442**	**370.486**	**382.836**	**382.836**	**177.525**	**183.442**	**177.525**	**183.442**	2,751.632
AMMONIA	LBS/MG	50.82	48.94	51.84	10.67	37.33	55.84	48.52	74.93	45.77	51.56	40.65	49.39	31.4
(Dry Weight)	TOTAL LBS	9,322	8,108	9,509	1,894	6,848	20,615	18,575	28,684	8,125	9,459	7,217	9,061	137,417
	COST/LB	$0.15300	$0.15300	$0.15300	$0.15300	$0.15300	$0.15300	$0.15300	$0.15300	$0.15300	$0.15300	$0.15300	$0.15300	$0.15300
	TOTAL COST	$1,426	$1,241	$1,455	$290	$1,048	$3,154	$2,842	$4,389	$1,243	$1,447	$1,104	$1,386	$21,025
	COST/MG	$7.77	$7.49	$7.93	$1.63	$5.71	$8.51	$7.42	$11.46	$7.00	$7.89	$6.22	$7.56	$4.80
CARBON	LBS/MG	0.00	0.00	0.00	0.00	0.00	0.00	0.00	0.00	0.00	0.00	0.00	0.00	0.0
(Dry Weight)	TOTAL LBS	0	0	0	0	0	0	0	0	0	0	0	0	0
	COST/LB	$0.93738	$0.93738	$0.93738	$0.93738	$0.93738	$0.93738	$0.93738	$0.93738	$0.93738	$0.93738	$0.93738	$0.93738	$0.00000
	TOTAL COST	$0	$0	$0	$0	$0	$0	$0	$0	$0	$0	$0	$0	$0
	COST/MG	$0.00	$0.00	$0.00	$0.00	$0.00	$0.00	$0.00	$0.00	$0.00	$0.00	$0.00	$0.00	$0.00
CHLORINE	LBS/MG	45.40	44.94	46.15	43.00	48.62	53.04	54.59	84.30	48.28	24.84	103.37	50.33	35.2
(Dry Weight)	TOTAL LBS	8,328	7,446	8,467	7,633	8,918	19,652	20,900	32,274	8,571	4,557	18,350	9,232	154,330
	COST/LB	$0.21735	$0.21735	$0.21735	$0.21735	$0.21735	$0.21735	$0.21735	$0.21735	$0.21735	$0.21735	$0.21735	$0.21735	$0.21735
	TOTAL COST	$1,810	$1,618	$1,840	$1,659	$1,938	$4,271	$4,543	$7,015	$1,863	$991	$3,988	$2,007	$33,544
	COST/MG	$9.87	$9.77	$10.03	$9.35	$10.57	$11.53	$11.87	$18.32	$10.49	$5.40	$22.47	$10.94	$7.66
COPPER SULFATE	LBS/MG	0.00	0.00	0.00	0.00	0.00	0.00	0.00	0.00	0.00	0.00	0.00	0.00	0.0
(Dry Weight)	TOTAL LBS	0	0	0	0	0	0	0	0	0	0	0	0	0
	COST/LB	$0.00000	$0.00000	$0.00000	$0.00000	$0.00000	$0.00000	$0.00000	$0.00000	$0.00000	$0.00000	$0.00000	$0.00000	$0.00000
	TOTAL COST	$0	$0	$0	$0	$0	$0	$0	$0	$0	$0	$0	$0	$0
	COST/MG	$0.00	$0.00	$0.00	$0.00	$0.00	$0.00	$0.00	$0.00	$0.00	$0.00	$0.00	$0.00	$0.00
CORROSION INHIBITOR	LBS/MG	22.12	22.27	19.54	20.36	19.99	22.62	18.79	29.01	33.95	26.73	29.43	25.07	18.1
(Wet Weight)	TOTAL LBS	4,057	3,689	3,585	3,614	3,667	8,381	7,192	11,106	6,027	4,903	5,224	4,598	66,044
	COST/LB	$0.42745	$0.42745	$0.42745	$0.42745	$0.42745	$0.42745	$0.42745	$0.42745	$0.42745	$0.42745	$0.42745	$0.42745	$0.42745
	TOTAL COST	$1,734	$1,577	$1,532	$1,545	$1,568	$3,582	$3,074	$4,747	$2,576	$2,096	$2,233	$1,966	$28,230
	COST/MG	$9.45	$9.52	$8.35	$8.70	$8.55	$9.67	$8.03	$12.40	$14.51	$11.42	$12.58	$10.72	$6.44
FERRIC CHLORIDE	LBS/MG	0.00	0.00	0.00	0.00	0.00	0.00	0.00	0.00	0.00	0.00	0.00	0.00	0.0
(Dry Weight)	TOTAL LBS	0	0	0	0	0	0	0	0	0	0	0	0	0
	COST/LB	$0.09595	$0.09595	$0.09595	$0.09595	$0.09595	$0.09595	$0.09595	$0.09595	$0.09595	$0.09595	$0.09595	$0.09595	$0.00000
	TOTAL COST	$0	$0	$0	$0	$0	$0	$0	$0	$0	$0	$0	$0	$0
	COST/MG	$0.00	$0.00	$0.00	$0.00	$0.00	$0.00	$0.00	$0.00	$0.00	$0.00	$0.00	$0.00	$0.00
FLUORIDE	LBS/MG	35.39	31.14	29.46	34.37	32.97	34.80	33.34	51.49	40.39	36.39	36.63	40.79	23.4
(Wet Weight)	TOTAL LBS	6,492	5,159	5,404	6,101	6,048	12,891	12,765	19,712	7,171	6,675	6,503	7,483	102,405
	COST/LB	$0.29000	$0.29000	$0.29000	$0.29000	$0.29000	$0.29000	$0.29000	$0.29000	$0.29000	$0.29000	$0.29000	$0.29000	$0.29000
	TOTAL COST	$1,883	$1,496	$1,567	$1,769	$1,754	$3,739	$3,702	$5,716	$2,080	$1,936	$1,886	$2,170	$29,697
	COST/MG	$10.26	$9.03	$8.54	$9.97	$9.56	$10.09	$9.67	$14.93	$11.71	$10.55	$10.62	$11.83	$6.78
PACL	LBS/MG	235.25	228.99	513.89	490.20	465.76	324.46	523.33	808.14	292.40	496.37	435.04	433.36	291.6
(Wet Weight)	TOTAL LBS	43,155	37,941	94,270	87,023	85,441	120,207	200,351	309,386	51,909	91,056	77,230	79,497	1,277,465
	COST/LB	$0.14994	$0.14994	$0.14994	$0.14994	$0.14994	$0.14994	$0.14994	$0.14994	$0.14994	$0.14994	$0.14994	$0.14994	$0.14994
	TOTAL COST	$6,471	$5,689	$14,135	$13,048	$12,811	$18,024	$30,041	$46,389	$7,783	$13,653	$11,580	$11,920	$191,543
	COST/MG	$35.27	$34.33	$77.05	$73.50	$69.84	$48.65	$78.47	$121.17	$43.84	$74.43	$65.23	$64.98	$43.72
POLYMERS NO 1	LBS/MG	0.00	0.00	0.00	0.00	0.00	0.12	0.00	0.00	5.75	1.76	0.00	0.00	0.3
(Wet Weight)	TOTAL LBS	0	0	0	0	0	46	0	0	1,021	323	0	0	1,390
	COST/LB	$1.07520	$1.07520	$1.07520	$1.07520	$1.07520	$1.07520	$1.07520	$1.07520	$1.07520	$1.07520	$1.07520	$1.07520	$1.07520
	TOTAL COST	$0	$0	$0	$0	$0	$49	$0	$0	$1,098	$348	$0	$0	$1,495
	COST/MG	$0.00	$0.00	$0.00	$0.00	$0.00	$0.13	$0.00	$0.00	$6.18	$1.89	$0.00	$0.00	$0.34
POLYMERS NO 2	LBS/MG	0.00	0.00	0.00	0.00	0.00	0.00	0.00	0.00	0.00	0.00	0.00	0.00	0.0
(Dry Weight)	TOTAL LBS	0	0	0	0	0	0	0	0	0	0	0	0	0
	COST/LB	$0.00000	$0.00000	$0.00000	$0.00000	$0.00000	$0.00000	$0.00000	$0.00000	$0.00000	$0.00000	$0.00000	$0.00000	$0.00000
	TOTAL COST	$0	$0	$0	$0	$0	$0	$0	$0	$0	$0	$0	$0	$0
	COST/MG	$0.00	$0.00	$0.00	$0.00	$0.00	$0.00	$0.00	$0.00	$0.00	$0.00	$0.00	$0.00	$0.00
POTASSIUM	LBS/MG	5.65	3.87	1.85	5.79	5.50	6.33	7.65	11.81	0.00	7.71	1.82	5.32	3.8
PERMANGANATE	TOTAL LBS	1036	641	339	1027	1010	2345	2928	4522	0	1414	324	976	16563
(Dry Weight)	COST/LB	$2.51940	$2.51940	$2.51940	$2.51940	$2.51940	$2.51940	$2.51940	$2.51940	$2.51940	$2.51940	$2.51940	$2.51940	$2.51940
	TOTAL COST	$2,611	$1,615	$855	$2,588	$2,544	$5,908	$7,378	$11,393	$0	$3,563	$815	$2,460	$41,730
	COST/MG	$14.23	$9.75	$4.66	$14.58	$13.87	$15.95	$19.27	$29.76	$0.00	$19.43	$4.59	$13.41	$9.53
SODIUM CHLORIDE	LBS/MG	1.42	2.70	6.43	2.33	4.72	4.47	2.54	3.92	0.00	1.17	0.00	0.94	1.8
(Dry Weight)	TOTAL LBS	261	448	1,179	414	865	1,655	971	1,500	0	214	0	172	7,679
	COST/LB	$0.14280	$0.14280	$0.14280	$0.14280	$0.14280	$0.14280	$0.14280	$0.14280	$0.14280	$0.14280	$0.14280	$0.14280	$0.14280
	TOTAL COST	$37	$64	$168	$59	$124	$236	$139	$214	$0	$31	$0	$25	$1,097
	COST/MG	$0.20	$0.39	$0.92	$0.33	$0.67	$0.64	$0.36	$0.56	$0.00	$0.17	$0.00	$0.13	$0.25
SODIUM HYDROXIDE 25%	LBS/MG	0.00	0.00	43.24	114.83	55.32	10.16	103.63	160.03	0.00	0.00	0.00	34.67	34.1
(Wet Weight)	TOTAL LBS	0	0	7932	20385	10148	3763	39673	61264	0	0	0	6360	149524
	COST/LB	$0.11400	$0.11400	$0.11400	$0.11400	$0.11400	$0.11400	$0.11400	$0.11400	$0.11400	$0.11400	$0.11400	$0.11400	$0.11400
	TOTAL COST	$0	$0	$904	$2,324	$1,157	$429	$4,523	$6,984	$0	$0	$0	$725	$17,046
	COST/MG	$0.00	$0.00	$4.93	$13.09	$6.31	$1.16	$11.81	$18.24	$0.00	$0.00	$0.00	$3.95	$3.89
SODIUM HYDROXIDE 50%	LBS/MG	0.00	0.00	0.00	0.00	0.00	0.00	0.00	0.00	0.00	0.00	0.00	0.00	0.0
(Wet Weight)	TOTAL LBS	0	0	0	0	0	0	0	0	0	0	0	0	0
	COST/LB	$0.00000	$0.00000	$0.00000	$0.00000	$0.00000	$0.00000	$0.00000	$0.00000	$0.00000	$0.00000	$0.00000	$0.00000	$0.00000
	TOTAL COST	$0	$0	$0	$0	$0	$0	$0	$0	$0	$0	$0	$0	$0
	COST/MG	$0.00	$0.00	$0.00	$0.00	$0.00	$0.00	$0.00	$0.00	$0.00	$0.00	$0.00	$0.00	$0.00
SODIUM	LBS/MG	0.00	0.00	0.00	0.00	0.00	0.00	0.00	0.00	0.00	0.00	0.00	0.00	0.0
PERMANGANATE	TOTAL LBS	0	0	0	0	0	0	0	0	0	0	0	0	0
(Wet Weight)	COST/LB	$0.00000	$0.00000	$0.00000	$0.00000	$0.00000	$0.00000	$0.00000	$0.00000	$0.00000	$0.00000	$0.00000	$0.00000	$0.00000
	TOTAL COST	$0	$0	$0	$0	$0	$0	$0	$0	$0	$0	$0	$0	$0
	COST/MG	$0.00	$0.00	$0.00	$0.00	$0.00	$0.00	$0.00	$0.00	$0.00	$0.00	$0.00	$0.00	$0.00
SULFURIC ACID (38%)	LBS/MG	0.00	0.00	0.00	0.00	0.00	0.00	0.00	0.00	0.00	0.00	0.00	0.00	0.0
(Wet Weight)	TOTAL LBS	0	0	0	0	0	0	0	0	0	0	0	0	0
	COST/LB	$0.00000	$0.00000	$0.00000	$0.00000	$0.00000	$0.00000	$0.00000	$0.00000	$0.00000	$0.00000	$0.00000	$0.00000	$0.00000
	TOTAL COST	$0	$0	$0	$0	$0	$0	$0	$0	$0	$0	$0	$0	$0
	COST/MG	$0.00	$0.00	$0.00	$0.00	$0.00	$0.00	$0.00	$0.00	$0.00	$0.00	$0.00	$0.00	$0.00
JDE CORRECTIONSJDE CORRECTIONS		0.00	0.00	0.00	0.00	0.00	0.00	0.00	0.00	0.00	0.00	0.00	0.00	0.00
TOTAL KY RIVER	LBS/MG	396	383	712	722	670	512	792	1224	467	647	647	640	436.6
	TOTAL LBS	72,652	63,432	130,684	128,091	122,944	189,556	303,356	468,448	82,823	118,602	114,849	117,381	1,912,818
	COST/LB	$0.21984	$0.20967	$0.17184	$0.16176	$0.18661	$0.20782	$0.18539	$0.18539	$0.20094	$0.20289	$0.18813	$0.19303	$0.19103
120252.518000.13	TOTAL COST	$15,972	$13,300	$22,457	$23,282	$22,943	$39,393	$56,240	$86,848	$16,643	$24,064	$21,607	$22,658	$365,406
	COST/MG	$87.07	$80.27	$122.42	$131.15	$125.07	$106.33	$146.90	$226.85	$93.75	$131.18	$121.71	$123.52	$132.80

← $133/MG

Chemicals

KENTUCKY RIVER POOL 3 PLANT

2016 BUDGET

LOW SERVICE PUMPAGE (MG)		JAN	FEB	MAR	APR	MAY	JUN	JUL	AUG	SEP	OCT	NOV	DEC	TOTAL
		183.442	171.807	183.442	177.525	183.442	370.486	382.636	382.636	177.525	183.442	177.525	183.442	2,757.550
AMMONIA	LBS/MG	50.82	48.94	51.84	10.67	37.33	55.84	48.52	74.93	45.77	$1.56	40.65	49.39	31.3
(Dry Weight)	TOTAL LBS	9,322	8,398	9,509	1,894	6,848	20,615	18,575	28,684	8,125	9,459	7,217	9,061	137,706
	COST/LB	$0.15300	$0.15300	$0.15300	$0.15300	$0.15300	$0.15300	$0.15300	$0.15300	$0.15300	$0.15300	$0.15300	$0.15300	$0.15300
	TOTAL COST	$1,426	$1,285	$1,455	$290	$1,048	$3,154	$2,842	$4,389	$1,243	$1,447	$1,104	$1,388	$21,069
	COST/MG	$7.77	$7.49	$7.93	$1.63	$5.71	$8.51	$7.42	$11.46	$7.00	$7.89	$6.22	$7.56	$4.80
CARBON	LBS/MG	0.00	0.00	0.00	0.00	0.00	0.00	0.00	0.00	0.00	0.00	0.00	0.00	0.0
(Dry Weight)	TOTAL LBS	0	0	0	0	0	0	0	0	0	0	0	0	0
	COST/LB	$0.93738	$0.93738	$0.93738	$0.93738	$0.93738	$0.93738	$0.93738	$0.93738	$0.93738	$0.93738	$0.93738	$0.93738	$0.00000
	TOTAL COST	$0	$0	$0	$0	$0	$0	$0	$0	$0	$0	$0	$0	$0
	COST/MG	$0.00	$0.00	$0.00	$0.00	$0.00	$0.00	$0.00	$0.00	$0.00	$0.00	$0.00	$0.00	$0.00
CHLORINE	LBS/MG	45.40	44.94	46.15	43.00	48.62	53.04	54.59	84.30	48.28	24.84	103.37	50.33	35.2
(Dry Weight)	TOTAL LBS	8,328	7,712	8,467	7,633	8,918	19,652	20,900	32,274	8,571	4,557	18,350	9,232	154,596
	COST/LB	$0.21735	$0.21735	$0.21735	$0.21735	$0.21735	$0.21735	$0.21735	$0.21735	$0.21735	$0.21735	$0.21735	$0.21735	$0.21735
	TOTAL COST	$1,810	$1,676	$1,840	$1,659	$1,938	$4,271	$4,543	$7,015	$1,863	$991	$3,988	$2,007	$33,601
	COST/MG	$9.87	$9.77	$10.03	$9.35	$10.57	$11.53	$11.87	$18.32	$10.49	$5.40	$22.47	$10.94	$7.65
COPPER SULFATE	LBS/MG	0.00	0.00	0.00	0.00	0.00	0.00	0.00	0.00	0.00	0.00	0.00	0.00	0.0
(Dry Weight)	TOTAL LBS	0	0	0	0	0	0	0	0	0	0	0	0	0
	COST/LB	$0.00000	$0.00000	$0.00000	$0.00000	$0.00000	$0.00000	$0.00000	$0.00000	$0.00000	$0.00000	$0.00000	$0.00000	$0.00000
	TOTAL COST	$0	$0	$0	$0	$0	$0	$0	$0	$0	$0	$0	$0	$0
	COST/MG	$0.00	$0.00	$0.00	$0.00	$0.00	$0.00	$0.00	$0.00	$0.00	$0.00	$0.00	$0.00	$0.00
CORROSION INHIBITOR	LBS/MG	22.12	22.27	19.54	20.36	19.99	22.62	18.79	29.01	33.95	26.73	29.43	25.07	15.1
(Wet Weight)	TOTAL LBS	4,057	3,821	3,585	3,614	3,667	8,381	7,192	11,106	6,027	4,903	5,224	4,598	66,176
	COST/LB	$0.42745	$0.42745	$0.42745	$0.42745	$0.42745	$0.42745	$0.42745	$0.42745	$0.42745	$0.42745	$0.42745	$0.42745	$0.42745
	TOTAL COST	$1,734	$1,633	$1,532	$1,545	$1,566	$3,582	$3,074	$4,747	$2,576	$2,096	$2,233	$1,966	$28,287
	COST/MG	$9.45	$9.52	$8.35	$8.70	$8.55	$9.67	$8.03	$12.40	$14.51	$11.42	$12.58	$10.72	$6.44
FERRIC CHLORIDE	LBS/MG	0.00	0.00	0.00	0.00	0.00	0.00	0.00	0.00	0.00	0.00	0.00	0.00	0.0
(Dry Weight)	TOTAL LBS	0	0	0	0	0	0	0	0	0	0	0	0	0
	COST/LB	$0.09595	$0.09595	$0.09595	$0.09595	$0.09595	$0.09595	$0.09595	$0.09595	$0.09595	$0.09595	$0.09595	$0.09595	$0.00000
	TOTAL COST	$0	$0	$0	$0	$0	$0	$0	$0	$0	$0	$0	$0	$0
	COST/MG	$0.00	$0.00	$0.00	$0.00	$0.00	$0.00	$0.00	$0.00	$0.00	$0.00	$0.00	$0.00	$0.00
FLUORIDE	LBS/MG	35.39	31.14	29.46	34.37	32.97	34.80	33.34	51.49	40.39	36.39	36.63	40.79	23.4
(Wet Weight)	TOTAL LBS	6,492	5,343	5,404	6,101	6,048	12,891	12,765	19,712	7,171	6,675	6,503	7,483	102,589
	COST/LB	$0.29000	$0.29000	$0.29000	$0.29000	$0.29000	$0.29000	$0.29000	$0.29000	$0.29000	$0.29000	$0.29000	$0.29000	$0.29000
	TOTAL COST	$1,883	$1,550	$1,567	$1,769	$1,754	$3,739	$3,702	$5,716	$2,080	$1,936	$1,886	$2,170	$29,751
	COST/MG	$10.26	$9.03	$8.54	$9.97	$9.56	$10.09	$9.67	$14.93	$11.71	$10.55	$10.62	$11.83	$6.77
PACL	LBS/MG	235.25	228.99	513.89	490.20	465.76	324.46	523.33	808.14	292.40	496.37	435.04	433.36	291.1
(Wet Weight)	TOTAL LBS	43,155	39,296	94,270	87,023	85,441	120,207	200,351	309,386	51,909	91,056	77,230	79,497	1,278,821
	COST/LB	$0.14994	$0.14994	$0.14994	$0.14994	$0.14994	$0.14994	$0.14994	$0.14994	$0.14994	$0.14994	$0.14994	$0.14994	$0.14994
	TOTAL COST	$6,471	$5,892	$14,135	$13,048	$12,811	$18,024	$30,041	$46,389	$7,783	$13,653	$11,580	$11,920	$191,746
	COST/MG	$35.27	$34.33	$77.05	$73.50	$69.84	$48.65	$78.47	$121.17	$43.84	$74.43	$65.23	$64.98	$43.85
POLYMERS NO 1	LBS/MG	0.00	0.00	0.00	0.00	0.00	0.12	0.00	0.00	5.75	1.76	0.00	0.00	0.3
(Wet Weight)	TOTAL LBS	0	0	0	0	0	46	0	0	1,021	323	0	0	1,390
	COST/LB	$1.07520	$1.07520	$1.07520	$1.07520	$1.07520	$1.07520	$1.07520	$1.07520	$1.07520	$1.07520	$1.07520	$1.07520	$1.07520
	TOTAL COST	$0	$0	$0	$0	$0	$49	$0	$0	$1,098	$348	$0	$0	$1,495
	COST/MG	$0.00	$0.00	$0.00	$0.00	$0.00	$0.13	$0.00	$0.00	$6.18	$1.89	$0.00	$0.00	$0.34
POLYMERS NO 2	LBS/MG	0.00	0.00	0.00	0.00	0.00	0.00	0.00	0.00	0.00	0.00	0.00	0.00	0.0
(Dry Weight)	TOTAL LBS	0	0	0	0	0	0	0	0	0	0	0	0	0
	COST/LB	$0.00000	$0.00000	$0.00000	$0.00000	$0.00000	$0.00000	$0.00000	$0.00000	$0.00000	$0.00000	$0.00000	$0.00000	$0.00000
	TOTAL COST	$0	$0	$0	$0	$0	$0	$0	$0	$0	$0	$0	$0	$0
	COST/MG	$0.00	$0.00	$0.00	$0.00	$0.00	$0.00	$0.00	$0.00	$0.00	$0.00	$0.00	$0.00	$0.00
POTASSIUM	LBS/MG	5.65	3.87	1.85	5.79	5.50	6.33	7.65	11.81	0.00	7.71	1.82	5.32	3.8
PERMANGANATE	TOTAL LBS	1036	664	339	1027	1010	2345	2928	4522	0	1414	324	976	16586
(Dry Weight)	COST/LB	$2.51940	$2.51940	$2.51940	$2.51940	$2.51940	$2.51940	$2.51940	$2.51940	$2.51940	$2.51940	$2.51940	$2.51940	$2.51940
	TOTAL COST	$2,611	$1,673	$855	$2,588	$2,544	$5,908	$7,378	$11,393	$0	$3,563	$815	$2,460	$41,788
	COST/MG	$14.23	$9.75	$4.66	$14.58	$13.87	$15.95	$19.27	$29.76	$0.00	$19.43	$4.59	$13.41	$9.51
SODIUM CHLORIDE	LBS/MG	1.42	2.70	6.43	2.33	4.72	4.47	2.54	3.92	0.00	1.17	0.00	0.94	1.8
(Dry Weight)	TOTAL LBS	261	464	1,179	414	865	1,655	971	1,500	0	214	0	172	7,695
	COST/LB	$0.14280	$0.14280	$0.14280	$0.14280	$0.14280	$0.14280	$0.14280	$0.14280	$0.14280	$0.14280	$0.14280	$0.14280	$0.14280
	TOTAL COST	$37	$66	$168	$59	$124	$236	$139	$214	$0	$31	$0	$25	$1,099
	COST/MG	$0.20	$0.38	$0.92	$0.33	$0.67	$0.64	$0.36	$0.56	$0.00	$0.17	$0.00	$0.13	$0.25
SODIUM HYDROXIDE 25%	LBS/MG	0.00	0.00	43.24	114.83	55.32	10.16	103.63	160.03	0.00	0.00	0.00	34.67	34.0
(Wet Weight)	TOTAL LBS	0	0	7932	20385	10148	3763	39673	61264	0	0	0	6360	149524
	COST/LB	$0.11400	$0.11400	$0.11400	$0.11400	$0.11400	$0.11400	$0.11400	$0.11400	$0.11400	$0.11400	$0.11400	$0.11400	$0.11400
	TOTAL COST	$0	$0	$904	$2,324	$1,157	$429	$4,523	$6,984	$0	$0	$0	$725	$17,046
	COST/MG	$0.00	$0.00	$4.93	$13.09	$6.31	$1.16	$11.81	$18.24	$0.00	$0.00	$0.00	$3.95	$3.88
SODIUM HYDROXIDE 50%	LBS/MG	0.00	0.00	0.00	0.00	0.00	0.00	0.00	0.00	0.00	0.00	0.00	0.00	0.0
(Wet Weight)	TOTAL LBS	0	0	0	0	0	0	0	0	0	0	0	0	0
	COST/LB	$0.00000	$0.00000	$0.00000	$0.00000	$0.00000	$0.00000	$0.00000	$0.00000	$0.00000	$0.00000	$0.00000	$0.00000	$0.00000
	TOTAL COST	$0	$0	$0	$0	$0	$0	$0	$0	$0	$0	$0	$0	$0
	COST/MG	$0.00	$0.00	$0.00	$0.00	$0.00	$0.00	$0.00	$0.00	$0.00	$0.00	$0.00	$0.00	$0.00
SODIUM	LBS/MG	0.00	0.00	0.00	0.00	0.00	0.00	0.00	0.00	0.00	0.00	0.00	0.00	0.0
PERMANGANATE	TOTAL LBS	0	0	0	0	0	0	0	0	0	0	0	0	0
(Wet Weight)	COST/LB	$0.00000	$0.00000	$0.00000	$0.00000	$0.00000	$0.00000	$0.00000	$0.00000	$0.00000	$0.00000	$0.00000	$0.00000	$0.00000
	TOTAL COST	$0	$0	$0	$0	$0	$0	$0	$0	$0	$0	$0	$0	$0
	COST/MG	$0.00	$0.00	$0.00	$0.00	$0.00	$0.00	$0.00	$0.00	$0.00	$0.00	$0.00	$0.00	$0.00
SULFURIC ACID (38%)	LBS/MG	0.00	0.00	0.00	0.00	0.00	0.00	0.00	0.00	0.00	0.00	0.00	0.00	0.0
(Wet Weight)	TOTAL LBS	0	0	0	0	0	0	0	0	0	0	0	0	0
	COST/LB	$0.00000	$0.00000	$0.00000	$0.00000	$0.00000	$0.00000	$0.00000	$0.00000	$0.00000	$0.00000	$0.00000	$0.00000	$0.00000
	TOTAL COST	$0	$0	$0	$0	$0	$0	$0	$0	$0	$0	$0	$0	$0
	COST/MG	$0.00	$0.00	$0.00	$0.00	$0.00	$0.00	$0.00	$0.00	$0.00	$0.00	$0.00	$0.00	$0.00
JDE CORRECTIONSJDE CORRECTIONS		0.00	0.00	0.00	0.00	0.00	0.00	0.00	0.00	0.00	0.00	0.00	0.00	0.00
TOTAL KY RIVER	LBS/MG	396	383	712	722	670	512	792	1224	467	647	647	640	436.0
	TOTAL LBS	72,652	65,696	130,684	128,091	122,944	189,556	303,356	468,448	82,823	118,802	114,849	117,381	1,915,083
	COST/LB	$0.21984	$0.20967	$0.17184	$0.18176	$0.18661	$0.20782	$0.18539	$0.18539	$0.20094	$0.20289	$0.18813	$0.19303	$0.19105
120252.518000.13	TOTAL COST	$15,972	$13,775	$22,457	$23,282	$22,943	$39,393	$56,240	$86,848	$16,643	$24,064	$21,607	$22,658	$365,881
	COST/MG	$87.07	$80.27	$122.42	$131.15	$125.07	$106.33	$146.90	$226.85	$93.75	$131.18	$121.71	$123.52	$132.68

← $1.33/MG

KRS II F+P

		January	February	March	April	May	June	July	August	September	October	November	December	Total
120252 LEX-Pool III WTP														
P08 Labor														
501200	Labor	39,868	38,056	39,868	38,513	42,181	38,513	40,347	42,181	36,679	42,181	40,347	38,513	477,247
501210	Labor NS OT	2,780	2,780	2,780	2,780	2,780	2,780	2,780	2,780	2,780	2,780	2,780	2,780	33,360
501211	Labor OT	1,575	1,575			1,575		1,575		1,575		3,150	3,150	14,175
501711	IP-Off-Annual-P/R JE	1,103	1,053	1,103	1,079	1,182	1,079	1,130	1,182	1,028	1,182	1,130	1,079	13,330
P08 Labor		45,326	43,464	43,751	42,372	47,718	42,372	45,832	46,143	42,062	46,143	47,407	45,522	538,112
P10 Fuel & Power														
13														
515100	Purch Power WT	53,564	49,527	53,564	52,218	53,564	98,186	100,994	100,994	52,218	53,564	52,218	53,564	774,175
P10 Fuel & Power		53,564	49,527	53,564	52,218	53,564	98,186	100,994	100,994	52,218	53,564	52,218	53,564	774,175
P11 Chemicals														
13														
518000	Chemicals WT	15,972	13,775	22,457	23,282	22,943	39,393	56,240	86,848	16,643	24,064	21,607	22,658	365,882
P11 Chemicals		15,972	13,775	22,457	23,282	22,943	39,393	56,240	86,848	16,643	24,064	21,607	22,658	365,882
P12 Waste Disposal														
13														
511100	Waste Disposal Exp W	1,200	1,200	1,200	1,200	1,200	1,200	1,200	1,200	1,200	1,200	1,200	1,200	14,400
P12 Waste Disposal		1,200	1,200	1,200	1,200	1,200	1,200	1,200	1,200	1,200	1,200	1,200	1,200	14,400
P14 Group Insurance														
504100	Group Insurance	8,301	8,301	8,301	8,301	8,301	8,301	8,301	8,301	8,301	8,301	8,301	8,301	99,612
P14 Group Insurance		8,301	8,301	8,301	8,301	8,301	8,301	8,301	8,301	8,301	8,301	8,301	8,301	99,612
P19 Rents														
16														
541400	Rents-Equipment Oper	200	200	200	200	200	200	200	200	200	200	200	200	2,400
P19 Rents		200	200	200	200	200	200	200	200	200	200	200	200	2,400
P20 General Office Exp														
16														
575280	Dues/Membership Dedu					1,200		200						1,400
575340	Employee Expenses AG	5,450	3,560	4,800	1,780			1,780		3,020				20,390
575342	Empl Exp Conf/Regist	500	1,000	760	1,000			350		200				3,810
575350	Meals Deduct	488	278	338	158	38	38	358	38	218	38	38	38	2,066
575351	Meals Non Deduct	488	278	338	158	38	38	358	38	218	38	38	38	2,066
575740	Telephone AG	650	650	650	650	650	650	650	650	650	650	650	650	7,800
575741	Cell Phone AG	45	45	45	45	45	45	45	45	45	45	45	45	540
P20 General Office Exp		7,621	5,811	6,931	3,791	1,971	771	3,741	771	4,351	771	771	771	38,072
P21 Miscellaneous														
13														
520100	M & S Oper WT	748	748	748	748	748	748	748	748	748	748	748	748	8,976
535000	Contr Svc-Other Oper	3,417	3,417	3,417	4,917	4,917	4,917	4,917	4,917	4,917	4,417	3,417	3,417	51,004
536000	Contr Svc-Lab Testin	300	300	300	300	300	300	300	300	300	300	300	300	3,600
575000	Misc Oper WT	917	917	917	917	917	917	917	917	917	917	917	917	11,004
575500	Janitorial WT	500	500	500	500	500	500	500	500	500	500	500	500	6,000
575545	Lab Supplies WT	1,017	547	547	1,017	547	547	1,017	547	547	1,017	547	547	8,444
575620	Office & Admin Suppl	50	50	50	50	50	50	50	50	50	50	50	50	600
575625	Overnight Shipping W	583	83	83	583	83	83	583	83	83	583	83	83	2,996
575780	Trash Removal WT	100	100	100	100	100	100	100	100	100	100	100	100	1,200
575820	Uniforms WT	175	175	175	175	175	175	175	175	175	175	175	175	2,100
16														
507100	401k Oper AG	848	813	817	791	892	791	857	862	787	862	887	852	10,059
508101	DCP Oper AG	1,641	1,567	1,641	1,585	1,736	1,585	1,660	1,736	1,510	1,736	1,660	1,585	19,642
550002	Trans Oper AG Lease					196	648							844
550003	Trans Oper AG Lease	45	45	45	45	45	45	45	45	45	45	45	45	540
575711	Add'l Security Costs	167	167	167	167	167	167	167	167	167	167	167	167	2,004
P21 Miscellaneous		10,508	9,429	9,507	11,895	11,373	11,573	12,036	11,147	10,846	11,617	9,596	9,486	129,013
P25 Maintenance Expense														
21														
620000	Mat and Sup Maint SS	500	500	500	500	500	500	500	500	500	500	500	500	6,000
23														
620000	Mat and Sup Maint WT	208	208	208	9,708	208	2,208	1,958	208	4,708	208	208	11,458	31,496
675000	Misc Maint WT	313	313	313	313	313	313	313	313	313	313	313	313	3,756
P25 Maintenance Expense		1,021	1,021	1,021	10,521	1,021	3,021	2,771	1,021	5,521	1,021	1,021	12,271	41,252
P29 General Taxes														

← $265.4/MG