P.S.C. KY. NO. 1

CANCELLING P.S.C. KY. NO.

WESTERN PULASKI COUNTY WATER DISTRICT

OF

1059 WEST HWY 80

SOMERSET, KENTUCKY, 42503

RATES & CHARGES

AND

RULES & REGULATIONS

FOR FURNISHING

WATER SERVICE

AT

PULASKI, WAYNE, & RUSSELL COUNTIES
KENTUCKY

PUBLIC SERVICE COMMISSION
OF KENTUCKY
EFFECTIVE

FILED WITH THE

PUBLIC SERVICE COMMISSION

OF

KENTUCKY

MAY 11 2002

PURSUANT TO 807 KAR 5:011,
SECTION 9 (1)
BY Stephanie Bell
SECRETARY OF THE COMMISSION

DATE OF ISSUE 4-18-02
Month / Date / Year

DATE EFFECTIVE
Month / Date / Year

ISSUED BY Ray Gamer
(Signature of Officer)

TITLE Chairman - Western Pulaski Co. Water District

FOR Pulaski, Wayne & Russell Cos., Kentucky
Community, Town or City

P.S.C. KY. NO. 1

Original SHEET NO. 1

CANCELLING P.S.C. KY. NO.

SHEET NO.

Western Pulaski County Water District
(Name of Utility)

CONTENTS

I. RATES AND CHARGES

A. Monthly Rates

B. Deposits

C. Meter Connection/Tap-on Charges

D. Special Non-recurring Charges

E. Purchased Water Rates

F. Leak Adjustment Rate

G. Wholesale Water Rates

H. Fire Sprinkler Rates

II. RULES AND REGULATIONS

A. Service Information

B. Special Rules or Requirements

C. Billings, Meter Readings, and Related Information

D. Deposits

E. Special Nonrecurring Charges

F. Customer Complaints to the Utility

G. Bill Adjustments

PUBLIC SERVICE COMMISSION
OF KENTUCKY
EFFECTIVE

MAY 11 2002

PURSUANT TO 807 KAR 5:011,
SECTION 9 (1)
BY: Stephanie Bell
SECRETARY OF THE COMMISSION

DATE OF ISSUE
Month / Date / Year

DATE EFFECTIVE
Month / Date / Year

ISSUED BY Ray Gann
(Signature of Officer)

TITLE Chairman - Western Pulaski Co. Water District

BY AUTHORITY OF ORDER OF THE PUBLIC SERVICE COMMISSION
IN CASE NO. DATED

FOR Pulaski, Wayne & Russell Cos., Kentucky
Community, Town or City

P.S.C. KY. NO. 1

Original SHEET NO. 2

CANCELLING P.S.C. KY. NO.

SHEET NO.

Western Pulaski County Water District
(Name of Utility)

CONTENTS

H. Status of Customer Accounts during Billing Disputes
I. Customer Request for Termination of Service
J. Customer Relations
K. Refusal or Termination of Service
L. Meter Testing
M. Meter Test Records
N. Customer Requested Meter Tests
O. Access to Property
P. Location of Records
Q. Safety Program
R. System Inspections
S. Reporting of Accidents, Property Damage, or Loss of Service
T. Continuity of Service
U. Pressures
V. Service Lines and Connections
W. Leak Adjustments
X. Ownership of Mains, Services, and Appurtenances
Y. Notification of System Problems

PUBLIC SERVICE COMMISSION
OF KENTUCKY
EFFECTIVE

MAY 11 2002

PURSUANT TO 807 KAR 5:011,
SECTION 9 (1)
BY Stephanie Bell
SECRETARY OF THE COMMISSION

DATE OF ISSUE
Month / Date / Year

DATE EFFECTIVE
Month / Date / Year

ISSUED BY Ray Gann
(Signature of Officer)

TITLE Chairman - Western Pulaski Co. Water District

BY AUTHORITY OF ORDER OF THE PUBLIC SERVICE COMMISSION
IN CASE NO. DATED

FOR Pulaski, Wayne & Russell Cos., Kentucky
Community, Town or City

P.S.C. KY. NO. 1

Original SHEET NO. 3

CANCELLING P.S.C. KY. NO.

SHEET NO.

Western Pulaski County Water District
(Name of Utility)

CONTENTS

Z. Legal Disclaimers

AA. Fire Departments

AB. Fire Hydrants

AC. Fire Sprinkler Systems

III. ATTACHMENTS/AMENDMENTS

1. Customer Service Requests

2. Water Distribution Main Extensions Funded by Customers

3. Criteria for Contractors Installing Water Main Extensions

4. Exhibit of Payback Agreement for Water Main Line Extensions

5. Water Shortage Response Plan

DATE OF ISSUE
Month / Date / Year

DATE EFFECTIVE
Month / Date / Year

ISSUED BY Ray Gann
(Signature of Officer)

TITLE Chairman- Western Pulaski Co. Water District

BY AUTHORITY OF ORDER OF THE PUBLIC SERVICE COMMISSION
IN CASE NO. DATED

PUBLIC SERVICE COMMISSION
OF KENTUCKY
EFFECTIVE

MAY 11 2002

PURSUANT TO 807 KAR 5:011,
SECTION 9 (1)
BY: Stephanie Bell
SECRETARY OF THE COMMISSION

FOR Pulaski, Wayne, & Russell Cos., Kentucky
Community, Town or City

P.S.C. KY. NO. 1

4rd Revised SHEET NO. 4

Western Pulaski County Water District
(Name of Utility)

CANCELLING P.S.C. KY. NO. 1

3rd Revised SHEET NO. 4

RULES AND REGULATIONS

MONTHLY WATER RATES

5/8 x ¾ Inch Meter				
First	2,000 gallons	$15.34	Minimum Bill	(I)
Over	2,000 gallons	5.82	per 1,000 gallons	
1 Inch Meter				
First	10,000 gallons	$61.90	Minimum Bill	(I)
Over	10,000 gallons	5.82	per 1,000 gallons	
1 ½ Inch Meter				
First	15,000 gallons	$91.00	Minimum Bill	(I)
Over	15,000 gallons	5.82	per 1,000 gallons	
2 Inch Meter				
First	20,000 gallons	$120.10	Minimum Bill	(I)
Over	20,000 gallons	5.82	per 1,000 gallons	
3 Inch Meter				
First	30,000 gallons	$178.30	Minimum Bill	(I)
Over	30,000 gallons	5.82	per 1,000 gallons	
Leak Adjustment		$4.02	per 1,000 gallons	

DATE OF ISSUE June 6, 2014
Month / Date / Year

DATE EFFECTIVE June 2, 2014
Month / Date / Year

ISSUED BY Don Calder
(Signature of Officer)

TITLE Chairman

BY AUTHORITY OF ORDER OF THE PUBLIC SERVICE COMMISSION

IN CASE NO. 2014-00157 DATED June 2, 2014

KENTUCKY
PUBLIC SERVICE COMMISSION
JEFF R. DEROUEN
EXECUTIVE DIRECTOR
TARIFF BRANCH
Bunt Kirtley
EFFECTIVE
6/2/2014
PURSUANT TO 807 KAR 5:011 SECTION 9 (1)

WESTERN PULASKI COUNTY WATER DISTRICT
1059 WEST HIGHWAY 80
SOMERSET, KY 42503

FOR Pulaski, Wayne, Russell Co.
Community, Town or City

P.S.C. KY. NO. _____

_____ SHEET NO. _____

CANCELLING P.S.C. KY. NO. _____

_____ SHEET NO. _____

_____
(Name of Utility)

CONTENTS

B. NOT APPLICABLE

C. METER CONNECTION/ TAP-ON CHARGES:

5/8 INCH X ¾ INCH	$525.00
1 INCH	$710.00
ALL OTHER SIZE METERS	ACTUAL COST

DATE OF ISSUE _____
Month / Date / Year

DATE EFFECTIVE _____
Month / Date / Year

ISSUED BY Don Callen
(Signature of Officer)

TITLE Western Pulaski County Water District Manager

BY AUTHORITY OF ORDER OF THE PUBLIC SERVICE COMMISSION
IN CASE NO. _____ DATED _____

PUBLIC SERVICE COMMISSION
OF KENTUCKY
EFFECTIVE
10/15/2007
PURSUANT TO 807 KAR 5:011
SECTION 9 (1)

By _____
Executive Director

D. SPECIAL NON-RECURRING CHARGES:

Connection/Turn-On Charge	25.00	
Late Payment Charge	10%	(T)
Meter Relocation Charge	Actual Cost	
Meter Re-read Charge	25.00	
Meter Test Charge	35.00	
Re-connection Charge	35.00	
Returned Check Charge	25.00	
Service Call/Investigation (After Hours)	35.00*	
Pit Cock Valve	150.00	
Repair Charge	Actual Cost	
Tampering Charge	50.00	

***NOTE –** Regular working hours for the utility's Maintenance Staff is 8:00 a.m. to 4:30 p.m. Monday through Friday, excluding holidays. Upon customer request, and subject to availability of Maintenance Staff, services may be performed outside regular working hours at the after hours rate. (T)

FOR Pulaski, Wayne & Russell Cos., Kentucky

P.S.C. KY. NO. 1

Original SHEET NO. 7

Western Pulaski County Water District
(Name of Utility)

CANCELLING P.S.C. KY. NO. _____

_____ SHEET NO. _____

RATES AND CHARGES

E. PURCHASED WATER RATES: RATE

$2.50 per 1,000 Gallons

F. LEAK ADJUSTMENT RATE:

$4.02 per 1,000 Gallons

G. Not Applicable

H. Not Applicable

DATE OF ISSUE June 19, 2012
Month / Date / Year

DATE EFFECTIVE August 1, 2012
Month / Date / Year

ISSUED BY Don Calder
Don Calder (Signature of Officer)

TITLE Chairman

BY AUTHORITY OF ORDER OF THE PUBLIC SERVICE COMMISSION
IN CASE NO. 2012-00238 DATED July 23, 2012.

KENTUCKY
PUBLIC SERVICE COMMISSION
JEFF R. DEROUEN
EXECUTIVE DIRECTOR
TARIFF BRANCH
Bunt Kirtley
EFFECTIVE
8/1/2012
PURSUANT TO 807 KAR 5:011 SECTION 9 (1)

FOR Pulaski, Wayne & Russell Cos., Kentucky
Community, Town or City

P.S.C. KY. NO. 1

Original SHEET NO. 8

CANCELLING P.S.C. KY. NO.

SHEET NO.

Western Pulaski County Water District
(Name of Utility)

RULES AND REGULATIONS

The following are the rules and regulations of the Western Pulaski County Water District. The schedule of rates prescribed herein will be uniformly charged to all customers of the utility. No one will receive or be entitled to free service by the utility. No employee or individual commissioner of the utility is permitted to make an exception to these rates, rules, or regulations, which are subject to be changed by the utility upon approval of the Public Service Commission.

A. Service Information.

1. Upon request the utility will give its customers or prospective customers such information as is reasonably possible in order that they may secure safe, efficient, and continuous service. The utility will inform its customers of any change made or proposed in the character of its service that might affect the efficiency, safety, or continuity of operation.
2. The utility will obtain the approval of the Public Service Commission prior to making any substantial change in the character of the service furnished that would affect the efficiency, adjustment, speed, or operation of the equipment or appliances of any customer. The application will show the nature of the change to be made, the number of customers affected, and the manner in which they will be affected.
3. The utility will inform each applicant for service of each type, class, and character of service available at his/her location.
4. Upon request the utility will provide the following information to any applicant/customer:
   a) Characteristics of Water. A written description of chemical constituents and bacteriological standards of the treated water as required by the Natural Resources Cabinet.
   b) Rates. A schedule of rates for water service applicable to the service to be rendered to the customer.

DATE OF ISSUE
Month / Date / Year

DATE EFFECTIVE
Month / Date / Year

ISSUED BY Ray Gann
(Signature of Officer)

TITLE Chairman- Western Pulaski Co. Water District

BY AUTHORITY OF ORDER OF THE PUBLIC SERVICE COMMISSION
IN CASE NO. DATED

PUBLIC SERVICE COMMISSION
OF KENTUCKY
EFFECTIVE

MAY 11 2002

PURSUANT TO 807 KAR 5:011,
SECTION 9 (1)
BY Stephanie Bell
SECRETARY OF THE COMMISSION

RULES AND REGULATIONS

c) Reading Meters. Information about the method of reading meters.

d) Bill Analysis. A statement of the past readings of a customer's meter for a period of two (2) years.

B. Special Rules or Requirements.

1. The utility cannot establish any special rule or requirement without first obtaining the approval of the Public Service Commission.
2. A customer that has complied with Public Service Commission rules and regulations cannot be denied service for failure to comply with the utility's rules that have not been approved by the Public Service Commission.
3. Each prospective customer desiring water service will be required to sign the utility's Water Service Contract before service is supplied by the utility.
4. No customer is allowed to resell water except under the terms of a special contract executed by the utility and approved by the Public Service Commission.

C. Billings, Meter Readings, and Related Information.

1. Information on bills. Each bill issued by the utility will clearly show the following, if applicable: class of service; present and last preceding meter readings; date of the present reading; number of units consumed; meter constant, if any; net amount for service rendered; all taxes; any adjustments; and the gross amount of the bill. The date after which a late payment penalty may apply to the gross amount will also be indicated. Estimated or calculated bills will be distinctly marked as such. The rate schedule under which the bill is computed will be furnished under one (1) of the following methods:

   a) By printing it on the bill.

   b) By publishing it in a newspaper of general circulation once each year.

RULES AND REGULATIONS

c) By mailing it to each customer once each year.

d) By providing a place on each bill where a customer may request a copy of the applicable rates. The utility will mail the customer a copy by return first class mail.

2. Bill format. A copy of the utility's billing form will be included in the utility's tariff.

3. Meter readings. Registration of each meter shall read in the same units as used for billing unless a conversion factor is shown on the billing form.

4. Frequency of meter reading. Unless prevented by reasons beyond the utility's control, meter readings will be taken every month. Records will be kept by the utility to insure that this information is available to Public Service Commission staff and any customer requesting this information. If, due to reasons beyond its control, the utility is unable to read a meter in accordance with this subsection, the utility will record the date and time the attempt was made, if applicable, and the reason the utility was unable to read the meter.

5. Related Information.

a) Bills and notices related to the utility's business will be mailed to the customer at the address listed on the Water Service Contract unless a change of address has been filed with the utility in writing. The utility will not otherwise be responsible for delivery of any bill or notice nor will the customer be excused from the payment of any bill or any performance required in the notice.

b) Water service will be billed monthly.

c) Bills are payable and due on the date of issuance.

d) Payment must be received, not postmarked, before the close of business on the due date listed on the bill card; otherwise, the delinquent bill will be assessed the late payment charge approved and on-file with the Public Service Commission. (T)

e) The late payment charge will be assessed on the delinquent amount of the bill, less taxes and any prior penalty amounts. Pursuant to Public Service Commission rules and regulations, a late payment charge may be assessed only once on any bill for rendered services.

f) With the exception of existing connections, the existence of a special contract, or unusual circumstances requiring approval of the utility, a single meter can serve no more than one residential or commercial unit on and after the effective date of this tariff.

g) For existing connections, special contracts, or other utility approved situations, where two or more units are being served by one meter, the following rules will apply:

1) One bill per meter will be sent to the customer that signed the Water Service Contract.

2) The bill will consist of a charge in the amount of the utility's minimum bill multiplied by the number of units the meter serves. The amount of water included with a minimum bill will be multiplied by the number of units and deducted from the total amount of consumption. The remaining consumption will be evenly distributed among each unit, added to each unit's minimum bill, with the charges calculated in accordance with the currently approved rate schedule.

3) The customer that signed the Water Service Contract will be fully and solely responsible for the charges associated with the connection including payment for all water passing through the meter, regardless of which unit is responsible for the water consumption.

KENTUCKY
PUBLIC SERVICE COMMISSION
JEFF R. DEROUEN
EXECUTIVE DIRECTOR
TARIFF BRANCH
Bunt Kirtley
EFFECTIVE
1/1/2016
PURSUANT TO 807 KAR 5:011 SECTION 9 (1)

For: Pulaski, Wayne & Russell Co's., Kentucky

PSC KY Number: _____

_____ Sheet No. _____

Cancelling PSC KY Number: _____

_____ Sheet No. _____

Western Pulaski County Water District
(Name of Utility)

Deposits

1. The utility requires a cash deposit to secure payment of bills, an equal amount for each class of customers, not to exceed 2/12 of the average annual bill when billed monthly, 3/12 when billed every 2 months, and 4/12 when billed every 3 months.

2. Deposit amount(s) shall be as follows:

$64.00

3. Service will be refused or discontinued if payment of deposit is not made.

4. Deposits may be waived for a customer showing satisfactory credit or payment history with the following criteria being considered: (a) Previous history with the utility. If the customer has no previous history with the utility, statements from other utilities, banks, etc., may be presented by the customer as evidence of good credit; (b) Whether the customer has an established income or line of credit; (c) Length of time the customer has resided or been located in the area; (d) Whether the customer owns the property to be served; (e) Whether another customer with a good payment history is willing to sign as a guarantor for an amount equal to the required deposit

5. Interest will accrue on all deposits at the rate prescribed by law beginning on the date of the deposit. Interest accrued will be refunded to the customer or credited to the customer's bill on an annual basis. If interest is paid or credited to the customer's bill prior to twelve (12) months from the date of deposit or the last interest payment date, the payment or credit shall be on a prorated basis.

6. Deposits will be refunded to customers:

   ☑ upon termination of service.

   ☐ after ____ months if customer has established a satisfactory payment history or upon termination of service.

DATE OF ISSUE _____
Month / Day / Year

DATE EFFECTIVE _____
Month / Day / Year

ISSUED BY _____
(Signature of Officer)

TITLE Chairman

BY AUTHORITY OF ORDER OF THE PUBLIC SERVICE COMMISSION

IN CASE NO. _____ DATED _____

KENTUCKY
PUBLIC SERVICE COMMISSION

JEFF R. DEROUEN
EXECUTIVE DIRECTOR

TARIFF BRANCH

Bunt Kirtley

EFFECTIVE

1/17/2013

PURSUANT TO 807 KAR 5:011 SECTION 9 (1)

RULES AND REGULATIONS

E. Special Non-recurring Charges:

1. The utility will collect for special nonrecurring charges to recover customer-specific costs incurred which would otherwise result in monetary loss to the utility or increased rates to other customers to whom no benefits accrue from the service provided or action taken. The utility may establish or change any special nonrecurring charge by applying for Public Service Commission approval of such charge in accordance with the provisions of 807 KAR 5:011, Section 10.
2. Special nonrecurring charges will be applied uniformly throughout the area served by the utility. Such charges will relate directly to the service performed or action taken and only yield enough revenue to pay the expenses incurred in rendering the service.
3. The utility will assess a charge for the following non-recurring services:
   a) Connection/Turn-on Charge: Will be assessed for new service turn-ons, seasonal turn-ons, temporary service, or transfer of service. The charge will not be made for initial installation of service where a meter connection/tap-on charge is applicable.
   b) Late Payment Penalty: May be assessed on the delinquent amount of the bill, less taxes.
   c) Meter Relocation Charge: Will be assessed when a customer or other authorized person requests that a meter be relocated, changed, or modified. Those requesting a change must reimburse the utility for the actual costs incurred, including but not limited to appropriate legal, administrative, engineering, overhead, or other related costs.

Western Pulaski County Water District
(Name of Utility)

RULES AND REGULATIONS

d) Meter Re-read Charge: Will be assessed when a customer requests the utility to re-read the customer's meter and the re-read proves that the original meter reading was correct.

e) Meter Test Charge: Will be assessed when a customer requests the utility perform a test on the customer's meter to check for accuracy, and the test shows the customer's meter is not more than two percent (2%) fast.

f) Reconnection Charge: Will be assessed to reconnect service that has been terminated for non-payment of service or for violation of Utility or Public Service Commission rules and regulations, and will include the cost of the service trip for both the disconnection and the reconnection.

g) Returned Check Charge: Will be assessed when a customer's check is returned, either due to insufficient funds or other reason due to customer fault.

h) Service Call/Investigation Charge (After Hours): Will be assessed when a customer requests the onsite presence of utility personnel to investigate a service problem and the problem is a result of the customer's own plumbing facilities, beyond the utility's delivery point, or not caused by failure of utility facilities. Any maintenance and repair of facilities beyond the utility's delivery point is the responsibility of the customer.

i) Tampering Charge: Will be assessed if any meter has been tampered with after being disconnected by the District or if the meter, pit cock valve, or yoke has been damaged at any time that the meter is in service.

j) Repair Charge: Will be assessed if the meter lid or box is damaged by negligence of the customer, property owner or any sub-contractor that is working on the property for the customer.

DATE OF ISSUE _____
Month / Date / Year

DATE EFFECTIVE _____
Month / Date / Year

ISSUED BY Ray Gam
(Signature of Officer)

TITLE Chairman - WPCWD

BY AUTHORITY OF ORDER OF THE PUBLIC SERVICE COMMISSION
IN CASE NO. _____ DATED _____

PUBLIC SERVICE COMMISSION
OF KENTUCKY
EFFECTIVE

MAY 11 2002

PURSUANT TO 807 KAR 5:011,
SECTION 9 (1)
BY: Stephanie Bell
SECRETARY OF THE COMMISSION

Western Pulaski County Water District
(Name of Utility)

RULES AND REGULATIONS

k) Pit Cock Valve Replacement Charge: Will be assessed to any customer who uses the pit cock valve or angular valve to shut off their water and breaks or burrs up the pit cock valve or angular valve or strips the threading of the valve so that the valve can no longer be used by the District.

F. Customer Complaints to the Utility. Upon complaint to the utility by a customer at the utility's office, by telephone, or in writing, the utility will make a prompt and complete investigation and advise the complainant of its findings. The utility's operator/manager will make a decision within ten (10) days, which the complainant will then have ten (10) days to appeal to the utility's board of commissioners. The customer will receive a final decision from the utility no later than thirty (30) days following the date that the complaint was made. If the complainant is not satisfied with the utility's decision, the utility will provide written notice to the complainant of his/her right to appeal the utility's decision by filing a complaint with the Public Service Commission. The utility will also provide the customer with the address and telephone number of the Public Service Commission. The utility will keep a record of all written complaints. This record will show the name and address of the complainant, the date and nature of the complaint, and the adjustment or disposition of the complaint. Records will be maintained for two (2) years from the date of resolution of the complaint.

RULES AND REGULATIONS

G. Bill Adjustments:

1. Fast or slow reading meters:

a) If upon periodic test, requested test, or complaint test, a meter in service is found to be more than two (2) percent fast, additional tests will be made to determine the average error of the meter. The tests will be made in accordance with Public Service Commission rules and regulations applicable to the type of meter involved.

b) If test results on a customer's meter show an average error greater than two (2) percent fast or slow, or if a customer has been incorrectly billed for any other reason, except in an instance where a utility has filed a verified complaint with the appropriate law enforcement agency alleging fraud or theft by a customer, the utility will immediately determine the period during which the error has existed, and will recompute and adjust the customer's bill to either provide a refund to the customer or collect an additional amount of revenue from the underbilled customer. Any adjustment to the customer's account will be in accordance with the rules and regulations of the Public Service Commission pursuant to 807 KAR 5:066 Section 9(c).

c) The utility will readjust the account based upon the period during which the error is known to have existed. If the period during which the error existed cannot be determined with reasonable precision, the time period will be estimated using such data as elapsed time since the last meter test, if applicable, and historical usage data for the customer. If that data is not available, the average usage of similar customer loads will be used for comparison purposes in calculating the time period. If the customer and the utility are unable to agree on an estimate of the time period during which the error existed, the Public Service Commission will determine the issue. In all

RULES AND REGULATIONS

instances of customer overbilling, the customer's account will be credited or the overbilled amount refunded at the discretion of the customer within thirty (30) days after final meter test results. A utility will not require customer repayment of any underbilling to be made over a period shorter than a period coextensive with the underbilling.

2. Meter read failure. When a meter has ceased to register, or a meter reading cannot be obtained, the quantity of water to be billed will be based upon an average of twelve-months' consumption. If said meter readings are not available for an entire twelve-month period, the water bill will be estimated by the utility, subject to an upward or downward adjustment once a twelve-month average of actual meter readings can be calculated.

3. Monitoring usage. The utility will monitor a customer's usage at least annually in such a way to draw the utility's attention to unusual deviations in a customer's usage. If a customer's usage is unduly high (100% above average) and the deviation is not otherwise explained, the utility will test the customer's meter to determine whether the meter shows an average error greater than two (2) percent fast or slow.

4. Usage investigation. If the utility's procedure for monitoring usage indicates that an investigation of a customer's usage is necessary, the utility will notify the customer in writing either during or immediately after the investigation of the reasons for the investigation, and of the findings of the investigation. If knowledge of a serious situation requires more expeditious notice, the utility will notify the customer by the most expedient means available.

RULES AND REGULATIONS

5. Customer notification. If a meter is tested and it is found necessary to make a refund or back bill a customer, the customer will be notified in substantially the following form:

   On _____, 20___, the meter bearing identification No. ____ installed in your building located at _____ (Street and Number) in _____ (city) was tested at _____ (on premises or elsewhere) and found to register _____ (percent fast or slow). The meter was tested on _____ (Periodic, Request, Complaint) test.

   Based upon this we herewith _____ (charge or credit) with the sum of $____, which amount has been noted on your regular bill. If you desire a cash refund, rather than a credit to your account, of any amount overbilled, you must notify this office in writing within seven (7) days of the date of this notice.

H. Status of Customer Accounts during Billing Disputes. With respect to any billing dispute, customer accounts shall be considered to be current while the dispute is pending as long as the customer continues to make undisputed payments and stays current on subsequent bills.

I. Customer's Request for Termination of Service.

1. Any customer desiring service terminated or changed from one address to another shall give the utility three (3) working days' notice in person, in writing, or by telephone, provided such notice does not violate contractual obligations. The customer will not be responsible for charges for service beyond the three- (3) day notice period if the customer provides proper notification and reasonable access to the meter during the notice period. If the customer notifies the utility of his/her request for termination by telephone, the burden of proof is on the customer to prove that service termination was requested if a dispute arises.

2. Upon request that service be reconnected at any premises subsequent to the initial installation or connection to its service lines, the utility will charge the applicant a reconnect fee as set out in this tariff and approved by the Public Service Commission

RULES AND REGULATIONS

J. Customer Relations.

1. Display of customer rights. The utility will prominently display in the office in which payment is received a copy of Customer's Rights. If a customer indicates to any utility personnel that he is experiencing difficulty in paying a current utility bill, that employee will refer the customer to the designated representative for explanation of the customer's rights.

2. Partial payment plans. The utility shall negotiate and accept reasonable partial payment plans at the request of residential customers who have received a termination notice for failure to pay, as long as the bill is for the current month, except that a utility is not required to negotiate a partial payment plan with a customer who is delinquent under a previous partial payment plan. Partial payment plans must be mutually agreed upon. Plans which extend for a period longer than thirty (30) days will be in writing and will advise customers that service may be terminated without additional notice if the customer fails to meet the obligations of the plan.

3. Utility inspections of service conditions prior to providing service. The utility will inspect the condition of the meter and service connections before providing service to a new customer so that prior or fraudulent use of the facilities will not be attributed to the new customer. The new customer will be afforded the opportunity to be present at such inspections. The utility will not be required to render service to any customer until any defects in the customer-owned portion of the service facilities have been corrected.

4. Prompt connection of service. The utility will reconnect existing service within twenty-four (24) hours, and will install and connect new service within seventy-two (72) hours, when the cause for refusal or discontinuance of service has been corrected and the rules and regulations of the utility and Public Service Commission have been met.

5. Advance termination notice. When advance termination notice is required, the termination notice will be mailed or otherwise delivered to the last known address of the customer. The

termination notice will be in writing, distinguishable and separate from any bill. The termination notice will plainly state the reason for termination, that the termination date will not be affected by receipt of any subsequent bill, and that the customer has the right to dispute the reasons for termination.

K. Refusal or Termination of Service.

1. The utility may refuse service to a customer under the following conditions:

   a) For noncompliance with utility or Public Service Commission rules and regulations. The utility cannot refuse service to any customer for noncompliance without first having made a reasonable effort to obtain customer compliance. After such effort by the utility, service may be refused only after the customer has been given a written notice of refusal stating the reasons for refusal of service.

   b) For dangerous conditions. If a dangerous condition exists which could subject any person to imminent harm or result in substantial damage to the property of the utility or others is found to exist on the customer's premises, then service will be refused. The utility will notify the customer in writing and, if possible, orally for the reasons for refusal of service. Such notice will be recorded by the utility and will include the corrective action to be taken by the customer before service can be provided.

   c) For refusal of access. When a customer refuses or neglects to provide reasonable access to the premises for installation, operation, meter reading, maintenance or removal of utility property, the utility may refuse service. The utility will notify the customer in writing and, if possible, orally for the reasons for refusal of service. Such notice will be recorded by the utility and will include the corrective action to be taken by the customer before service can be provided.

   d) For outstanding indebtedness. The utility will not furnish new service to any customer who is indebted to the utility until that customer has repaid the indebtedness.

RULES AND REGULATIONS

e) For noncompliance with state, local, or other codes. The utility may refuse service to a customer if the customer does not comply with state, municipal or other codes, rules, and/or administrative regulations applying to such service. The utility will notify the customer in writing and, if possible, orally for the reasons for refusal of service. Such notice will be recorded by the utility and will include the corrective action to be taken by the customer before service can be provided.

2. Utility Initiated Termination of Service.

a) The termination notice requirements stated herein will not apply if termination notice requirements to a particular customer or customers are otherwise dictated by the terms of a special contract between the utility and customer which has been approved by the Public Service Commission.

b) When advance termination notice is required, the termination notice shall be mailed or otherwise delivered to the last known address of the customer. The termination notice shall be in writing, distinguishable and separate from any bill. The termination notice shall plainly state the reason for termination, that the termination date will not be affected by receipt of any subsequent bill, and that the customer has the right to dispute the reasons for termination.

c) The utility may terminate service to a customer under the following conditions with an advance termination notice:

1) For noncompliance with utility or Public Service Commission rules and regulations. The utility cannot terminate service to any customer for noncompliance without first having made a reasonable effort to obtain customer compliance. After such effort by the utility, service may be terminated only after the customer has been given at least ten (10) days written termination notice.

Western Pulaski County Water District
(Name of Utility)

RULES AND REGULATIONS

2) For refusal of access. When a customer refuses or neglects to provide reasonable access to the premises for installation, operation, meter reading, maintenance, or removal of utility property, the utility may terminate service. Such action will be taken only when corrective action negotiated between the utility and customer has failed to resolve the situation and after the customer has been given at least ten (10) days' written notice of termination.

3) For noncompliance with state, local, or other codes. The utility may terminate service to a customer that does not comply with state, municipal, and/or other codes, rules, and regulations that apply to such service. A utility may terminate service only after ten (10) days' written notice of termination is provided unless ordered to terminate immediately by a governmental official.

4) For nonpayment of bills. The utility may terminate service for nonpayment of charges incurred for utility services. The utility may terminate service only after five (5) days' written notice of termination is provided, and after twenty (20) days have elapsed since the mailing date of the original unpaid bill.

d) The utility may terminate service to a customer if the following conditions exist without an advance termination notice. Within twenty-four (24) hours after such termination, the utility shall send written notification to the customer of the reason(s) for termination upon which the utility relies, and of the customer's right to challenge the termination by filing a formal complaint with the Public Service Commission. The utility will not restore service until the customer agrees to comply with all rules and regulations of the utility and Public Service Commission.

1) For illegal use or theft of service. The utility may terminate service to a customer without advance notice if it has evidence that a customer has obtained unauthorized service by illegal use or theft. This right of termination

RULES AND REGULATIONS

is separate from and in addition to any other legal remedies that the utility may pursue for illegal use or theft of service.

2) For dangerous conditions. If a dangerous condition relating to the utility's service which could subject any person to imminent harm or result in substantial damage to the property of the utility or others is found to exist on the customer's premises, then service will be terminated immediately. Upon termination the utility will leave notification at the customer's dwelling and, if possible, orally contact the customer to inform him/her of the reasons for the termination. Such notice will be recorded by the utility and will include the corrective action to be taken by the customer or utility before service can be restored.

3) Unapproved Extensions and/or Additions. Any extension or additions to an existing service connection that have not been approved by the utility will be considered theft of service, and will constitute grounds for termination of service. This right of termination is separate from and in addition to any other legal remedies that the utility may pursue for illegal use or theft of service.

4) Misrepresentation. Any misrepresentation in the application or contract as to the property or fixtures to be supplied or additional use to be made of water will constitute grounds for termination of service, and the customer shall be liable for any damage to any of the utility's facilities or equipment.

5) Failure to Report Changes. Failure to notify the utility of additions to the property or fixtures to be supplied or additional use to be made of water will constitute grounds for termination of service.

6) Resale of Water. Under no circumstances will a customer be allowed to resell or give away water except under the terms of a special contract executed by

RULES AND REGULATIONS

the utility and approved by the Public Service Commission. Failure to comply with this rule will constitute grounds for termination of service.

7) Waste or Misuse. Waste or misuse of water due to improper or imperfect service pipes and/or failure to keep said pipes in suitable state of repair will constitute grounds for termination of service.

8) Tampering with meter, meter seal, service, valves, or other system facilities, or permitting such tampering by others will constitute grounds for termination of service.

9) Connections, cross-connections, or permitting the same, of any separate water supply to premises that receive water from the utility will constitute grounds for termination of service.

e) The utility will not terminate service to a customer if the following conditions exist:

1) If payment for services is made. Service will not be terminated to a customer that was sent a termination notice if the customer delivers full payment to the utility prior to the actual termination of service.

2) If a partial payment agreement is in effect. Service will not be terminated for nonpayment if the customer and the utility have entered into a partial payment plan and the customer is meeting the requirements of the plan.

3) If a medical certificate is presented. Service will not be terminated for thirty (30) days beyond the termination date if a physician, registered nurse or public health officer certifies in writing that termination of service will aggravate a debilitating illness or infirmity on the affected premises. The utility may refuse to grant consecutive extensions for medical certificates past the original thirty (30) days unless the certificate is accompanied by an agreed

RULES AND REGULATIONS

partial payment plan. The utility will not require a new deposit from a customer to avoid termination of service for a thirty (30) day period who presents to the utility a medical certificate certified in writing by a physician, registered nurse or public health officer.

L. Meter Testing.

1. Water meters will be tested before being installed for use by any customer. The water meter will be in good working order and adjusted as close to the optimum operating tolerance as possible, in accordance with 807 KAR 5:022, Section 8(3)(a), 807 KAR 5:041, Section 17(1)(a)-(c) and 807 KAR 5:066, Section 15(2)(a)-(b).
2. The utility may have all or part of its meter testing performed by another utility or agency approved by the Public Service Commission. The utility will notify the Public Service Commission of the make, type, and serial number of standards used for testing.
3. The utility cannot place in service any basic measurement standard unless the Public Service Commission has approved the calibration. The Public Service Commission will be notified promptly of the adoption or deletion of any basic standards requiring approval of the calibration.
4. Meter testers must be certified by the Public Service Commission. Certified meter testers will perform tests as necessary to determine the accuracy of the utility's meters and to adjust the utility's meters to the degree of accuracy required by the rules and regulations of the Public Service Commission.

RULES AND REGULATIONS

M. Meter Test Records.

1. A complete record of all meter tests and adjustments and data sufficient to allow checking of test calculations will be recorded by the meter tester. Such record will include: information to identify the unit and its location; date of tests; reason for such tests; readings before and after test; statement of "as found" and "as left" accuracies sufficiently complete to permit checking of calculations employed; notations showing that all required checks have been made; statement of repairs made, if any; identifying number of the meter; type and capacity of the meter; and the meter constant. The complete record of tests of each meter will be continuous for at least two (2) periodic test periods and will in no case be less than two (2) years.
2. The utility will keep numerically arranged and properly classified records for each meter owned, used and inventoried by the utility. The identification number, date of purchase, name of manufacturer, serial number, type, rating, and name and address of each customer on whose premises the meter has been in service with date of installation and removal will be included in the records. These records will also contain condensed information concerning all tests and adjustments including dates and general results of such adjustments. The records will reflect the date of the last test and indicate the proper date for the next periodic test required by the applicable Public Service Commission rule and/or regulation.
3. Upon completion of adjustment and test of any meter pursuant to Public Service Commission rules and regulations, the utility will affix to the meter a suitable seal in such a manner that adjustments or registration of the meter cannot be altered without breaking the seal.

RULES AND REGULATIONS

N. Customer Requested Meter Tests.

1. The utility will make a test of any meter upon written request of any customer if the request is not made more frequently than once every twelve- (12) months. The customer shall be given the opportunity to be present at the requested test. If the test shows that the meter was not more than two (2) percent fast, the utility will make a reasonable charge for the test, the amount being approved by the Public Service Commission and set out in the utility's tariff.
2. After having first obtained a test from the utility, any customer of the utility may request a meter test by the Public Service Commission upon written application. Such request shall not be made more frequently on one (1) meter than once every twelve- (12) months.

O. Access to Property.

1. The utility shall at all reasonable hours have access to meters, service connections, and other property owned by it and located on customer's premises for purposes of installation, maintenance, meter reading, operation, replacement or removal of its property at the time service is terminated. Any employee of the utility whose duties require him/her to enter the customer's premises will wear a distinguishing uniform or other insignia identifying him/her as an employee of the utility, or show a badge or other identification which will identify him/her as an employee.
2. Obtaining easements and right-of-ways necessary to extend service will be the responsibility of the utility.
3. All customers must grant, convey, or cause to be granted or conveyed to the utility a perpetual easement and right-of-way across any property owned or controlled by the customer wherever necessary for the utility's facilities in order to provide service.
4. The utility cannot require a prospective customer to obtain easements or rights-of-way on property not owned by the prospective customer as a condition for providing service.

RULES AND REGULATIONS

However, the cost of obtaining easements or rights-of-way will be included in the total per foot cost of an extension, and will be apportioned among the utility and customer in accordance with the applicable extension administrative regulation.

P. Location of Records. All records required by Public Service Commission rules and regulations will be kept in the office of the utility and will be made available to representatives, agents or staff of the Public Service Commission upon reasonable notice at all reasonable hours.

Q. Safety Program. The utility has adopted and will execute a safety program, appropriate to the size and type of its operations. At a minimum, the safety program does:

1. Establish a safety manual with written guidelines for safe working practices and procedures to be followed by utility employees.
2. Instruct employees in safe methods of performing their work.
3. Instruct employees who, in the course of their work, are subject to the hazard of electrical shock, asphyxiation or drowning, in accepted methods of artificial respiration.

R. System Inspections.

1. The utility has adopted inspection procedures to assure safe and adequate operation of its facilities and compliance with Public Service Commission rules and regulations. These procedures will be filed with the Public Service Commission for review.
2. Upon receipt of a report of a potentially hazardous condition at any utility facility made by a qualified employee, public official, or customer, the utility will inspect all portions of the system which are the subjects of the report.
3. Appropriate records will be kept by the utility to identify the inspection made, deficiencies found and action taken to correct the deficiencies.

RULES AND REGULATIONS

4. Inspections. The utility will make systematic inspections of its system in the manner set out below to insure that the Public Service Commission's safety requirements are being met. These inspections will be made as often as necessary but not less frequently than is set forth below for various classes of facilities and types of inspection.

   a) The utility will annually inspect all structures pertaining to source of supply for their safety and physical and structural integrity, including dams, intakes, and traveling screens.

   b) The utility will annually inspect all structures pertaining to purification for their safety, physical and structural integrity and for leaks, including sedimentation basins, filters, and pumping equipment and water storage facilities, including electric power wiring and controls; hydrants, mains, and valves.

   c) The utility will monthly inspect construction equipment and vehicles for defects, wear, operational hazards, lubrication, and safety features.

S. Reporting of Accidents, Property Damage, or Loss of Service.

1. Within two (2) hours following discovery the utility will notify the Public Service Commission by telephone or electronic mail of any utility related accident which results in:

   a) Death; or shock or burn requiring medical treatment at a hospital or similar medical facility, or any accident requiring inpatient overnight hospitalization;

   b) Actual or potential property damage of $25,000 or more; or

   c) Loss of service for four (4) or more hours to ten (10) percent or 500 or more of the utility's customers, whichever is less.

2. A summary written report will be submitted by the utility to the Public Service Commission within seven (7) calendar days of the utility related accident.

FOR Pulaski, Wayne & Russell Cos., Kentucky
Community, Town or City

P.S.C. KY. NO. 1

Original SHEET NO. 31

CANCELLING P.S.C. KY. NO.

SHEET NO.

Western Pulaski County Water District
(Name of Utility)

RULES AND REGULATIONS

T. Continuity of Service.

1. Emergency interruptions. The utility will make all reasonable efforts to prevent interruptions of service and when such interruptions occur will endeavor to reestablish service with the shortest possible delay consistent with the safety of its consumers and the general public. If an emergency interruption of service affects service to any public fire protection device, the utility will immediately notify the fire chief or other public official responsible for fire protection.

2. Scheduled interruptions. If the utility finds it necessary to schedule an interruption of its service, it will notify all customers to be affected by the interruption, stating the time and anticipated duration of the interruption. Whenever possible, scheduled interruptions will be made at hours of least inconvenience to customers. If public fire protection is provided by mains affected by the interruptions, the utility will notify the fire chief or other officials responsible for fire protection of the interruption, stating the time and anticipated duration. The fire chief or other official responsible for fire protection will be notified immediately upon restoration of service.

3. Record of interruptions. The utility will keep a complete record of all interruptions on its entire system. This record will show the cause of interruption, date, time, duration, remedy and steps taken to prevent recurrence.

DATE OF ISSUE
Month / Date / Year

DATE EFFECTIVE
Month / Date / Year

ISSUED BY Ray Bam
(Signature of Officer)

TITLE Chairman - WPCWD

BY AUTHORITY OF ORDER OF THE PUBLIC SERVICE COMMISSION
IN CASE NO. DATED

PUBLIC SERVICE COMMISSION
OF KENTUCKY
EFFECTIVE

MAY 11 2002

PURSUANT TO 807 KAR 5:011,
SECTION 9 (1)
BY Stephanie Bell
SECRETARY OF THE COMMISSION

Western Pulaski County Water District
(Name of Utility)

RULES AND REGULATIONS

U. Pressures.

1. Standard pressure. The utility will maintain a standard pressure in its distribution system at locations to be designated as the point or points of "standard pressure." The selection of such points will be confined to locations fairly representative of average conditions. In selecting points for fixed standard pressure, the utility may divide its distribution system into districts if division is necessary due to differences of elevation or loss of pressure because of friction, or both, and may either adopt a standard pressure for each division or establish a single standard pressure for its distribution system as a whole. In no case will the constant difference between the highest and lowest pressures in a district for which a standard has been adopted exceed fifty (50) percent of such standard. The utility may, in extenuating circumstances, furnish service that does not comply with the foregoing specifications if the customer is fully advised of the conditions under which average service may be expected. The Public Service Commission, upon investigation, may require improvements when it appears right and proper that such upgrades should be made. In no event, however, will the pressure at the customer's service pipe under normal conditions fall below thirty- (30) psig nor will the static pressure exceed 150 psig.

2. Pressure surveys. At least once a year the utility will make a survey of pressures in its distribution system of sufficient magnitude to indicate the quality of service being rendered at representative points in its system. Pressure charts for these surveys will show the date and time of beginning and end of the test and the location at which the test was made. Records of these pressure surveys will be maintained at the utility's office and will be made available to the Public Service Commission upon request.

FOR Pulaski, Wayne & Russell Cos., Kentucky
Community, Town or City

P.S.C. KY. NO. 1

Original SHEET NO. 33

Western Pulaski County Water District
(Name of Utility)

CANCELLING P.S.C. KY. NO.

SHEET NO.

RULES AND REGULATIONS

V. Service Lines & Connections.

1. The utility will furnish and install at its own expense for the purpose of connecting its distribution system to the customer's premises that portion of the service connection from its main to and including the meter and meter box. The utility will recoup this expense from the customer in accordance with KRS 278.0152.
2. In areas where the distribution system follows well-defined streets and roads, the customer's point of service will be located at that point on or near the street right-of-way or property line most accessible to the utility from its distribution system. In areas where the distribution system does not follow streets and roads, the point of service will be located 50 feet off the main or to the customer's property line, whichever is closer. Prior to installation of the meter the utility will consult with the customer as to the most practical location.
3. Depth of service line. All service lines must be laid at a sufficient depth (a minimum of 24 inches) to prevent freezing during the coldest weather normally experienced except where services are not intended for use during freezing weather and are actually drained during such periods.
4. A plumbing permit from the appropriate regulatory agency is required before the utility can set the meter.
5. The applicant/customer must furnish and lay the necessary pipe to make the connection from the point of service to the point of usage and be financially responsible for all costs associated with the installation and maintenance of his/her service line plumbing, including a shut-off valve and one-way check valve, installed on his/her property beginning at the outlet side of the water meter. The service line must be kept in good repair and in accordance with utility and Public Service Commission rules and regulations.
6. The installation and maintenance of the water service line must be in accordance with the rules and regulations of the Kentucky Department of Health.

DATE OF ISSUE
Month / Date / Year

DATE EFFECTIVE
Month / Date / Year

ISSUED BY Ray Gann
(Signature of Officer)

TITLE Chairman - WPCWD

BY AUTHORITY OF ORDER OF THE PUBLIC SERVICE COMMISSION
IN CASE NO. DATED

PUBLIC SERVICE COMMISSION
OF KENTUCKY
EFFECTIVE

MAY 11 2002

PURSUANT TO 807 KAR 5:011,
SECTION 9 (1)
BY Stephanie Bell
SECRETARY OF THE COMMISSION

Western Pulaski County Water District
(Name of Utility)

RULES AND REGULATIONS

7. A cross-connection of the utility's system with any other source is strictly prohibited.
8. A well that has or is being used on the premises must be inspected by utility personnel to verify disconnection and separation.
9. All service lines on the customer's side of the meter must consist of copper or PVC pipe with a rating of no less than 200 psi, and should not be less than 3/4 inches.
10. Absolutely no galvanized pipe or fittings can be used in the installation.
11. The utility will not set a meter on a customer's service line at a point that does not deliver 30 psig at the meter.
12. If the applicant/customer's point of usage is at a higher elevation than the meter, the customer should consult with a reputable engineering firm to properly size the service line from the meter to the point of usage.
13. Should an applicant/customer desire a higher pressure due to location or other need, provisions must be made by the applicant for an individual pressure booster system. The manner of connection, location cross-connection protection and type is subject to approval by the utility. The utility reserves the right to require discontinuance and disconnection should the private booster system have a detrimental effect on the utility's system.
14. Piping on the premises of the applicant/customer must be installed so that connections are conveniently located with respect to the utility's lines and mains. A place must be provided for metering that is unobstructed and accessible at all times.
15. The utility may require the applicant/customer may, at his/her own expense, to install a back-flow preventor and/or pressure regulator.
16. All meters will be installed, renewed, and maintained at the expense of the utility, and the utility reserves the right to approve the size and type of meter used.

DATE OF ISSUE _____
Month / Date / Year

DATE EFFECTIVE _____
Month / Date / Year

ISSUED BY Ray Gann
(Signature of Officer)

TITLE Chairman - WPCWD

BY AUTHORITY OF ORDER OF THE PUBLIC SERVICE COMMISSION
IN CASE NO. _____ DATED _____

PUBLIC SERVICE COMMISSION
OF KENTUCKY
EFFECTIVE

MAY 11 2002

PURSUANT TO 807 KAR 5:011,
SECTION 9 (1)
BY Stephanie Bell
SECRETARY OF THE COMMISSION

RULES AND REGULATIONS

17. All taps and connections to the mains of the utility must be made by and/or under the direction and supervision of utility personnel or the utility's approved contractors for that area and will incur a meter connection/tap-on charge, an amount that has been approved by the Public Service Commission for such service. Payment of this fee is for the privilege of connecting to the water system and the payment of the fee does not constitute the purchase of a water meter.

18. Should an applicant requesting a 5/8" x 3/4" meter require service on the opposite side of the road from the water main, the utility will provide the service at no additional cost to the customer other than the standard meter connection/tap-on charge. All larger size meters will be charged the actual cost of installing the meter, including, when applicable, the additional costs for crossing the road.

19. Any customer having boilers and/or pressure vessels that receive water from the utility must have a check valve on the water supply line and a vacuum valve on the steam line in order to prevent a collapse were the water supply from the utility be interrupted or discontinued.

W. Leak Adjustments. A customer may make a request for a bill adjustment in the event of a leak under the following conditions:

1. The customer must request a leak adjustment verbally or in writing to the utility.

2. The customer's bill will be based on two components. The first step will be to calculate the customer's average monthly usage over a twelve-month period. The second step will be to deduct the customers average monthly usage (as calculated in the above) from the total amount of water that passed through the meter. The usage calculated in step one will be billed at the utility's regular rates, while the remaining usage will be charged at the per thousand gallon leak adjustment rate, as set forth in the rates and charges portion of the utility's approved tariff. All water passing through the meter must be accounted and paid for by the customer. So the customer will owe the amount of his/her average bill plus the per

thousand gallon leak adjustment rate for the remainder of the water that passed through the meter.

3. If meter readings are not available for an entire twelve-month period, the water bill will be estimated by the utility, subject to an upward or downward adjustment once a twelve-month average of actual meter readings can be calculated.
4. Only one (1) leak adjustment will be made per twelve-month period.

X. Ownership of Mains, Services, and Appurtenances:

1. All mains, fire hydrants, valves, crossings, and other appurtenances are and shall remain the property of the utility, whether installed by the utility or the customer.
2. All service lines from the main to the meter with appurtenances are and shall remain the property of the utility, whether installed by the utility or the customer.
3. The customer shall install, own, and maintain his/her service line from the meter (or point of delivery) to the point of usage.

Y. Notification of System Problems. The customer shall notify the utility immediately should the service be unsatisfactory for any reason, or should there be any defects, problems, trouble, or accidents affecting the water system.

RULES AND REGULATIONS

Z. Legal Disclaimers.

1. The utility shall in no event be held responsible for any claims made against it for reasons of system failure or interruption of service. No persons shall be entitled to damages nor for any portion of a payment refunded for any system failure or interruption of service which in the opinion of the utility is deemed necessary.
2. No person shall maliciously, willfully, or negligently break, damage, destroy, uncover, deface, or tamper with any structure appurtenance or equipment which is a part of the utility's water system. Any person violating this provision will be subject to immediate arrest and/or discontinuance of water service and shall pay the cost of repairing or replacing the utility's facilities.
3. If any loss or damage to the property of the utility or any accident or other injury to persons or property is caused by or results from the negligence or wrongful action of a customer, members of his/her household, his/her agent or employee, the cost of necessary repairs or replacements shall be paid by the customer of the utility and any liability otherwise resulting shall be that of the customer.
4. For purposes of fire protection, including any customer's fire protection system, the utility cannot guarantee a water supply at any particular flow rate or pressure. The fire flow may vary depending upon other water demands on the system, various water facility limitations, or other circumstances. The customer will indemnify and hold harmless the utility and its employees from and against all claims, damages, losses, and expenses incurred as a result of insufficient water supply or deficient system facilities.

FOR _____

PSC KY NO._____

_____SHEET NO._____

CANCELLING PSC KY NO._____

_____SHEET NO._____

Western Pulaski Co. Water District
(Name of Utility)

Fire Departments.

Any city, county, urban-county, charter county, fire protection district, or volunteer fire protection district ("User") may withdraw water from the utility's water distribution system for fighting fires or training firefighters at no charge on the condition that it maintains estimates of the amount of water used for fire protection and training during the calendar month and reports the amount of this water usage to the utility no later than the 15th day of the following calendar month.

Any User that withdraws water from the utility's water distribution system for fire protection or training purposes and fails to submit the required report on water usage in a timely manner shall be assessed the cost of this water. A User shall submit a monthly report even if it withdraws no water for fire protection or training purposes.

A non-reporting User's usage shall be presumed to be 0.3 percent of the utility's total water sales for the calendar month. A non-reporting User may present evidence of its actual usage to rebut the presumed usage. The utility shall consider this evidence and shall adjust the presumed usage amount accordingly.

The non-reporting User shall be billed for this usage at the lowest usage block rate regardless of customer classification that the utility charges.

A non-reporting User shall also be assessed a penalty of $ 100.00 for each failure to submit a report in a timely manner.

DATE OF ISSUE 12/22/10
Month / Date / Year

DATE EFFECTIVE 01/01/2010
Month / Date / Year

ISSUED BY Don Collier
(Signature of Officer)

TITLE Board Chairman

BY AUTHORITY OF ORDER OF THE PUBLIC SERVICE COMMISSION
IN CASE NO. _____ DATED _____

KENTUCKY
PUBLIC SERVICE COMMISSION
JEFF R. DEROUEN
EXECUTIVE DIRECTOR
TARIFF BRANCH
Bunt Kirtley
EFFECTIVE
1/21/2011
PURSUANT TO 807 KAR 5:011 SECTION 9 (1)

FOR Pulaski, Wayne & Russell Cos., Kentucky
Community, Town or City

P.S.C. KY. NO. 1

Original SHEET NO. 38

Western Pulaski County Water District
(Name of Utility)

CANCELLING P.S.C. KY. NO.

SHEET NO.

RULES AND REGULATIONS

Cancelled January 21, 2011. See previous page.

AA. ~~Fire Departments. For the purpose of off-setting fifty percent or more of its operation expenses, any fire department not receiving public funds from the Commonwealth of Kentucky, or any political subdivision thereof, may withdraw water from the utility's facilities at no charge, for the extinguishing of fires or the training of firemen. A fire department making such withdrawals shall provide an estimate of its withdrawals to the utility at the end of each month.~~

AB. Fire Hydrants:

Not Applicable

AC. Fire Sprinkler Systems. Unless specifically exempted within the utility's approved tariff, all connections to the utility's system must be metered; one exception being fire sprinkler systems, subject to utility inspection and approval. A monthly charge will be assessed for each fire sprinkler system. The charge will be approved by the Public Service Commission and included in the rates and charges portion of the utility's approved tariff.

DATE OF ISSUE
Month / Date / Year

DATE EFFECTIVE
Month / Date / Year

ISSUED BY Ray Gam
(Signature of Officer)

TITLE Chairman - WPCWD

BY AUTHORITY OF ORDER OF THE PUBLIC SERVICE COMMISSION
IN CASE NO. DATED

PUBLIC SERVICE COMMISSION
OF KENTUCKY
EFFECTIVE

MAY 11 2002

PURSUANT TO 807 KAR 5:011,
SECTION 9 (1)
BY Stephanie Bell
SECRETARY OF THE COMMISSION

WESTERN PULASKI CO. WATER DISTRICT
2128 W. Hwy 80
Somerset, KY 42503-3751
Public Service Commission 1-800-772-4636

ACCOUNT	TO
SERVICE AT	

TYPE	PRESENT	PREVIOUS	USAGE	CHARGES

CLASS	AMOUNT DUE AFTER DUE DATE	DUE DATE	AMOUNT DUE ON OR BEFORE DUE DATE

RETURN SERVICE REQUESTED

PRE-SORT
FIRST-CLASS MAIL
U.S. POSTAGE PAID
SOMERSET, KY 42501
PERMIT NO. 35

ACCOUNT	DUE DATE

AMOUNT DUE ON OR BEFORE DUE DATE	SAVE THIS	AMOUNT DUE AFTER DUE DATE

WESTERN PULASKI CO. WATER DISTRICT
2128 W. Hwy 80
Somerset, KY 42503-3751
Public Service Commission 1-800-772-4636

ACCOUNT	TO
SERVICE AT	

TYPE	PRESENT	PREVIOUS	USAGE	CHARGES

CLASS	AMOUNT DUE AFTER DUE DATE	DUE DATE	AMOUNT DUE ON OR BEFORE DUE DATE

RETURN SERVICE REQUESTED

PRE-SORT
FIRST-CLASS MAIL
U.S. POSTAGE PAID
SOMERSET, KY 42501
PERMIT NO. 35

ACCOUNT	DUE DATE

AMOUNT DUE ON OR BEFORE DUE DATE	SAVE THIS	AMOUNT DUE AFTER DUE DATE

WESTERN PULASKI CO. WATER DISTRICT
2128 W. Hwy 80
Somerset, KY 42503-3751
Public Service Commission 1-800-772-4636

ACCOUNT	TO
SERVICE AT	

TYPE	PRESENT	PREVIOUS	USAGE	CHARGES

CLASS	AMOUNT DUE AFTER DUE DATE	DUE DATE	AMOUNT DUE ON OR BEFORE DUE DATE

RETURN SERVICE REQUESTED

PRE-SORT
FIRST-CLASS MAIL
U.S. POSTAGE PAID
SOMERSET, KY 42501
PERMIT NO. 35

ACCOUNT	DUE DATE

AMOUNT DUE ON OR BEFORE DUE DATE	SAVE THIS	AMOUNT DUE AFTER DUE DATE

KENTUCKY
PUBLIC SERVICE COMMISSION
JEFF R. DEROUEN
EXECUTIVE DIRECTOR
TARIFF BRANCH
Bunt Kirtley
EFFECTIVE
1/1/2016
PURSUANT TO 807 KAR 5:011 SECTION 9 (1)

Western Pulaski Co. Water
2128 W Hwy 80
Somerset, Ky 42503-3751
(606) 679-1569
Toll Free 1-877-223-1517

Western Pulaski County
Water District
2128 W Hwy 80
Somerset, KY 42503-3751
Toll Free 1-877-223-1517

BILLING CODES

BF - Balance Forward
WA - Water
TX - Tax
UT - School Tax

OFFICE # (606) 679-1569 OR (606) 677-9448
EMER. # (606) 679-1569 OR (606) 667-9448
OFFICE HOURS: 8:00 - 4:30

FAILURE TO RECEIVE BILL OR LATE NOTICE DOES NOT EXEMPT FROM PAYING BILL, LATE FEES OR HAVING SERVICE DISCONNECTED. ADJUSTMENTS MUST BE PAID IN 30 DAYS. RATES AVAILABLE UPON REQUEST

Western Pulaski Co. Water
2128 W Hwy 80
Somerset, Ky 42503-3751
(606) 679-1569
Toll Free 1-877-223-1517

Western Pulaski County
Water District
2128 W Hwy 80
Somerset, KY 42503-3751
Toll Free 1-877-223-1517

BILLING CODES

BF - Balance Forward
WA - Water
TX - Tax
UT - School Tax

OFFICE # (606) 679-1569 OR (606) 677-9448
EMER. # (606) 679-1569 OR (606) 667-9448
OFFICE HOURS: 8:00 - 4:30

FAILURE TO RECEIVE BILL OR LATE NOTICE DOES NOT EXEMPT FROM PAYING BILL, LATE FEES OR HAVING SERVICE DISCONNECTED. ADJUSTMENTS MUST BE PAID IN 30 DAYS. RATES AVAILABLE UPON REQUEST

Western Pulaski Co. Water
2128 W Hwy 80
Somerset, Ky 42503-3751
(606) 679-1569
Toll Free 1-877-223-1517

Western Pulaski County
Water District
2128 W Hwy 80
Somerset, KY 42503-3751
Toll Free 1-877-223-1517

BILLING CODES

BF - Balance Forward
WA - Water
TX - Tax
UT - School Tax

OFFICE # (606) 679-1569 OR (606) 677-9448
EMER. # (606) 679-1569 OR (606) 667-9448
OFFICE HOURS: 8:00 - 4:30

FAILURE TO RECEIVE BILL OR LATE NOTICE DOES NOT EXEMPT FROM PAYING BILL, LATE FEES OR HAVING SERVICE DISCONNECTED. ADJUSTMENTS MUST BE PAID IN 30 DAYS. RATES AVAILABLE UPON REQUEST

KENTUCKY
PUBLIC SERVICE COMMISSION
JEFF R. DEROUEN
EXECUTIVE DIRECTOR
TARIFF BRANCH
Bunt Kirtley
EFFECTIVE
1/1/2016
PURSUANT TO 807 KAR 5:011 SECTION 9 (1)

WESTERN PULASKI COUNTY WATER DISTRICT
1059 WEST HWY 80, SOMERSET, KY 42503
606-679-1569

1ST Amendment to Tariffs

POLICY
WESTERN PULASKI COUNTY WATER DISTRICT
CUSTOMER SERVICE REQUESTS

The following policy is a clarification of the WPCWD standard practices in consideration of customer requests for individual water service.

1. The customer must sign and execute the Customer Agreement for Water Service and pay the connection fee. By execution of the Customer Agreement, the customer does not provide an explicit right of access by the Water District to the customer's property for installation of service and for maintenance.

2. A customer water service is defined as a single service for a single customer and shall not serve multiple residential dwellings.

3. Where an existing water distribution main exists that can serve the customer, the Water District will endeavor to provide the connection and meter within 60.

4. The customer is responsible for providing the plumbing inspection and permit by the Health Department and making all necessary changes to the customer's plumbing as required to pass the inspection. The meter will not be installed until the inspection is passed.

5. To qualify, a customer service must run directly from the main to the customer's property and may not cross any other private property; i.e., the service line to the meter originates at the water distribution main on the Water District's easement, may then cross a public right-of-way, and ends at the meter which is set just inside the customer's property line (typically near the driveway).

6. The Water District reserves the right to determine the meter location. The meter, the angular valve, and all service equipment on the District's side of the meter remains the property of the Water District. The angular valve is defined as the point of service.

7. The customer is responsible for all costs and maintenance of any customer service lines past the point of service.

8. WPCWD is responsible for pressure and flow to the point of service. The customer is responsible for pressure and flow past the point of service. WPCWD does not guarantee pressure and flow for long customer service lines.

9. Where there is no existing water distribution main, the customer agrees that unless the water main is extended by the customer per the policy for customer funded extensions, service is not guaranteed and the customer may wait an undetermined time until the Water District can justify and fund a general additions and improvements project. Should the customer so choose, the connection fee can be refunded, with interest per the policy, but future service and road extensions will no longer be considered for non-paying parties.

PUBLIC SERVICE COMMISSION
OF KENTUCKY
EFFECTIVE
MAY 1 1 2002
PURSUANT TO 807 KAR 5:011,
SECTION 9 (1)
BY Stephanie Bell
SECRETARY OF THE COMMISSION

WESTERN PULASKI COUNTY WATER DISTRICT
1059 WEST HWY 80, SOMERSET, KY 42503
606-679-1569

2nd Amendment to Tariffs
POLICY
WESTERN PULASKI COUNTY WATER DISTRICT
WATER DISTRIBUTION MAIN EXTENSION FUNDED BY CUSTOMERS

The WPCWD allows for customer or developers funded extensions of water distribution mains (which owner funding is not available) and for a partial refund of costs per PSC regulations where the following conditions are met:

1. The customer must apply to the Water District for plan approval and comply with that policy.

2. The Water District controls the water line design and specifications.

3. The water distribution main must have the capacity to serve additional customers to equal or exceed the typical distribution main on the system, i.e., the Water District will not compensate a customer for a limited or single customer service (except as provided in the standard customer service agreement).

4. The Water District retains the sole authority to determine the feasibility of the extension (for example, the engineering evaluation of the survey, determination of the effects of evaluation, the cost and effect of pumping and/or pressure reduction, etc. may adversely affect the economics and feasibility). Also, the Water District's consulting engineer shall secure prior approval of the planned extension with the Commonwealth of Kentucky Natural Resources and Environmental Protection Cabinet, Department for Environmental Protection, Division of Drinking Water, and any other regulatory agency.

5. The Water District offers service to any customer property on the distribution lines per the regulations subject to the physical limitations of tank pressure and storage. Any customer desiring service at the elevations above the maximum served or at flow rates above the system capacity is responsible for any required additional pumping and/or storage.

6. The water line construction is controlled by the Water District, including bid evaluation and award of contract(s).

7. The standard water service customer agreement is signed and the connection fee is paid by at least one customer (which includes the provision of up to 50 feet of service connection or to property line (all connections are the same price) and the water meter by the Water District; this provision is not affected by this policy.

8. All required easements are signed and recorded. In the case of platted subdivisions the water line easement must be a condition of the sale of the lots.

9. The customer(s) provides the full cost of the installed water distribution main and the funds are deposited with the Water District at least 90 days before construction. The records of recent competitive bids for similar construction may be used to determine the cost. Any balance due to cost under-runs will be refunded to the customer and the customer will pay for any overruns. Water meters will not be installed until all bills are paid and releases are executed. Construction and completion

PUBLIC SERVICE COMMISSION
OF KENTUCKY
EFFECTIVE
MAY 1 1 2002
PURSUANT TO 807 KAR 5:011
SECTION 9 (1)
BY: [illegible]
SECRETARY OF THE COMMISSION

will be forecast at the time of the customer's payment;however, circumstances may cause delay or cancellation and no guarantee of service is made. In event of cancellation, the full amount will be refunded to the customer(s).

10. During construction, the developer is responsible for the cost of field inspection and update of the plans to document the "as-built" plan set for the WPCWD.

11. Additional new customers may be signed before, during or after construction and initiation of service for up to 10 years after initiation of service. Each new customer must meet the same criteria and the current policy for customer service agreements. The Water District reserves the right to determine the feasibility of additional connections on a case-by-case basis. Each new customer signed will be treated as one customer for purposes of accounting for any credit. The ten-year clock starts with the start of service on the initial water distribution main extension for the first new customer.

12. The refund will be per 807 KAR 5:066--Water, Section 11.2.b.1, current and effective revision as of the date of application.

PUBLIC SERVICE COMMISSION
OF KENTUCKY
EFFECTIVE

MAY 1 1 2002

PURSUANT TO 807 KAR 5:011,
SECTION 9 (1)
BY: Stephanie Bell
SECRETARY OF THE COMMISSION

WESTERN PULASKI COUNTY WATER DISTRICT
1059 WEST HWY 80
SOMERSET, KY 42503
606-679-1569

3RD AMENDMENT TO TARIFFS

CRITERIA FOR CONTRACTORS INSTALLING WATER MAIN EXTENSIONS

MUST FILL OUT CRITERIA WORKSHEET AND MEET AND PROVE THE FOLLOWING:

1. Workmens Compensation
2. Liability Insurance for $1,000,000
3. Umbrella Policy for $1,000,000
4. Bonded for Amount of Estimated Project
5. Two Previous Job References Over $10,000
6. Must Hold a Master Plumber's License

PUBLIC SERVICE COMMISSION
OF KENTUCKY
EFFECTIVE

MAY 1 1 2002

PURSUANT TO 807 KAR 5:011,
SECTION 9 (1)
BY Stephanie Bell
SECRETARY OF THE COMMISSION

EXHIBIT C

WESTERN PULASKI COUNTY WATER DISTRICT
1059 WEST HWY 80
SOMERSET, KY 42503
606-679-1569 or 606-677-9448

_____

_____

_____

_____

Dear Customer:

Kentucky Public Service Commission Regulation 807 KAR 5:006, Section 20, states that a customer's request to test a meter must be made in writing. Such request may be made once in a twelve (12) month period. You have the opportunity to be present at such test if you desire. If the required test results is an average error of greater than 2%, the account will be adjusted for the period the meter's error is known to have existed or for one-half the period of time between the present date and the last meter test date or twelve months, whichever is less. If the average error is greater than 2% slow, the customer will receive an additional bill under the same conditions as above.

After having a test made on your meter by _____, if you are not satisfied with the results, you may make written application to the Public Service Commission to have your meter tested by the Commission.

Application may be made in writing:

Commonwealth of Kentucky
Public Service Commission
Post Office Box 615
Frankfort, Kentucky 40602

A non-refundable service charge will be required if the meter is found to be accurately running within the guidelines of 807 KAR 5:006, Section 8:3.

Such request of the Commission may not be made more frequently than once each twelve (12) months.

If you desire a meter tested by this Water District:

Pulaski County Water District #2
1059 West Highway 80
Somerset, Kentucky 42501

Please sign and return this form to our office:

_____

(See Reverse for Test Result)

PUBLIC SERVICE COMMISSION
OF KENTUCKY
EFFECTIVE

MAY 1 1 2002

PURSUANT TO 807 KAR 5:011,
SECTION 9 (1)
BY: Stephanie Bell
SECRETARY OF THE COMMISSION

Western Pulaski County Water District
1059 West Hwy 80
Somerset, Ky 42503

PAYMENT AGREEMENT

Date_____

Name:_____

Address:_____

Account Number:_____

Social Security No.:_____

Past Due Account: $_____
Reconnect Fee: $_____
Total Due this Date: $_____
Initial Payment: $_____

I the undersigned, agree to pay Western Pulaski County Water District the amount of $_____ on the unpaid balance according to the following schedule, and keep the current bill paid in full.

$_____on_____Year___
$_____on _____Year___
$_____on_____Year___
$_____on_____Year___
$_____on_____Year___
$_____on_____Year___

I also, agree to have the past due amount and all current bills paid in full no later than _____ year_____.

I understand that if my payments are not made according to the terms of this agreement, my service will be discontinued without further notice.
A returned check, (cold check) received on the above account at anytime, will result in discontinuance of service without notification. Should it be necessary to disconnect service for previous reasons FULL AMOUNT of the payment agreement, plus the current bill and service charges must be paid (CASH or MONEY ORDER) in order for service to be restored.

PUBLIC SERVICE COMMISSION OF KENTUCKY EFFECTIVE MAY 1 1 2002 PURSUANT TO 807 KAR 5:011, SECTION 9 (1) BY Stephanie Bell SECRETARY OF THE COMMISSION

CUSTOMER SIGNATURE_____DATE_____

EMPLOYEE SIGNATURE_____

WORKSHEET FOR CALCULATION OF CUSTOMER CONTRIBUTION FOR WATER MAIN EXTENSION

NAME OF EXTENSION: _____
LOCATION - BEGINNING AT: _____
ENDING AT: _____
DATE PLACED IN SERVICE: _____
DATE REFUND PERIOD EXPIRES: _____

1. Total cost of construction of main (Not including meter connections) $_____

2. Divided by total length of water main in feet +_____FT.

3. Cost per feet of main =_____

4. 50 feet times the cost/ foot X 50 Feet

5. District's portion of cost per Customer = $ _____

6. Times number of customers connected to main X_____

7. District's total portion of cost = $_____

8. Total cost of construction of main (Line 1) $_____

9. Minus District's total portion of Cost (line 7) -_____

10. Part to be paid by customers $_____

11. Divided by number of customers (line 6) _____

12. Each customer's required Contributions for the water main Extension itself (Subject to refund) $_____

13. Plus the approved " Tap-on-fee" (Not Refundable) $_____ +_____ $_____

14. Total contribution to be paid by Each customer connected to the Main extension at this time =_____

PUBLIC SERVICE COMMISSION
OF KENTUCKY
EFFECTIVE

MAY 1 1 2002

PURSUANT TO 807 KAR 5:011,
SECTION 9 (1)
BY Stephanie Bell
SECRETARY OF THE COMMISSION

EXHIBIT E(2)

WESTERN PULASKI COUNTY WATER DISTRICT
1059 WEST HWY 80
SOMERSET, KY 42503
(606) 679-1569 OR 677-9448

Pay Back Agreement for Water Line Extension

I hereby authorize Western Pulaski County Water District upon approval from the Division of Water and Western Pulaski County Water District Board of Directors to hire the approved contractors to lay a water line on _____ as an extension to the Western Pulaski County Water District. I understand that by paying the estimated amount of _____ I will be entitled to a reimbursement or will be billed for monies that are less or more than the estimated price. Included in the estimate will be the charges for engineering and inspection fees. By paying this estimate to the Western Pulaski County Water District I am entitled to 50 ft of the cost for the line for each new meter set paid for on an annual basis for 10 years starting on the date that the water line becomes operational. This also entitles Western Pulaski County Water District to incorporate the line into the system and provide all maintenance and jurisdiction of the water line.

I,_____have read and fully accept the terms of this agreement on this the _____day of _____ in the year of _____.

I,_____ as a representative of Western Pulaski County Water District have read and fully accept the terms of this agreement on this the _____day of _____in the year of _____.

PUBLIC SERVICE COMMISSION
OF KENTUCKY
EFFECTIVE

Given under my hand and Notarial Seal on this the _____day of _____, _____.

MAY 1 1 2002

NOTARY PUBLIC, STATE AT LARGE

My comm. Exp.:_____

PURSUANT TO 807 KAR 5:011,
SECTION 9 (1)
BY Stephanie Bell
SECRETARY OF THE COMMISSION

EXHIBIT F (1) AMMENDED

WESTERN PULASKI COUNTY WATER DISTRICT

STEPS FOR PRIVATE WATERLINE DEVELOPMENT

1. The developer comes before the Board with a written request to accept their new development waterline into the system.

2. David Kingsley, Jr. (Operator and Field Manager for Western Pulaski County Water District), the Board, and our engineer, will have at least 30 days in order to look at the feasibility.

3. At the following Board meeting the Board of Commissioners will either pass or deny the motion to approve the water line extension based upon the operator and the engineer's report of feasibility.

4. If the motion passes, our Operator and Field Manager will get from the developer a recordable plat of the development and any easements that are needed in order to proceed with the water line extension.

5. Our Operator and Field Manager, David Kingsley, Jr., will provide the developer with an estimated cost of the project including inspection and engineering fees.

6. If the estimated cost of the project is over the amount that requires it to be bid ($20,000) then the developer must pay all engineering cost up front for the bidding process.

7. If the estimate is agreeable to both parties then the developer will sign a contract with the water company agreeing to the estimate and the payback program or if the project is over the bidding requirement ($20,000) then the developer will sign papers to that effect.

8. After all money is paid up front to the Western Pulaski County Water District and the District's engineer, the designs are drawn up and sent to Division of Water for approval along with a certified check (Frankfort filing fee for private development). This will be paid by the developer separately or along with the estimate.

9. If the bid process is not a requirement then the Western Pulaski County Water District's approved contractors will be required to comply with the approved plans and specifications. At that time our approved contractor will start work the project.

PUBLIC SERVICE COMMISSION
EFFECTIVE

JUL 23 2003

PURSUANT TO 807 KAR 5:011
SECTION 9 (1)
BY
EXECUTIVE DIRECTOR

County Water District #2 area of service or the Pleasant Hill Water District area of service and the cost of the estimate(over $20,000 is subject to a bid process) will be required to comply with the approved plans and specifications. At that time the approved contractor will start on the project.

10.

PUBLIC SERVICE COMMISSION
OF KENTUCKY
EFFECTIVE

MAY 1 1 2002

PURSUANT TO 807 KAR 5:011,
SECTION 9 (1)
BY Stephanie Bell
SECRETARY OF THE COMMISSION

Exhibit (G)

PUBLIC SERVICE COMMISSION
OF KENTUCKY
EFFECTIVE

Date: _____ 20 _____. MAY 15 1995

PURSUANT TO 807 KAR 5:011,
SECTION 9 (1)
BY: Jeffrey C. Mew
PUBLIC SERVICE COMMISSION

We the undersigned have received a copy of the Extension Policies of the Western Pulaski County Water District #2, we have read and understand it, and agree to follow the rules contained therein.

Signature of Developer: _____.

Signature of Contractor: _____.

Signature of District Manager: _____.

IN WITNESS WHEREOF, the above signatures have executed this instrument this _____ day of _____, 19_____.

STATE OF KENTUCKY
COUNTY OF _____: SCT

I, the undersigned Notary Public, within and for the County and State named above, do hereby certify that the forgoing Water Line Extension Agreement, was this day produced to me and signed and acknowledged before me by;

_____

_____

_____

to be their voluntary act and deed.

Given under my hand and Notarial Seal this _____ day of _____ 19_____.

_____
NOTARY PUBLIC

PUBLIC SERVICE COMMISSION
OF KENTUCKY
EFFECTIVE

My Commission Expires: _____ MAY 11 2002

This instrument prepared by:

_____

PURSUANT TO 807 KAR 5:011,
SECTION 9 (1)
BY: Stephanie Bell
SECRETARY OF THE COMMISSION

P.S.C. KY. NO. _____

_____ SHEET NO. (Exhibit G) (1)

..TERN PULASKI COUNTY WATER DISTRICT

CANCELLING P.S.C. KY NO. _____

_____ SHEET NO. (Exhibit G)

RULES AND REGULATIONS

PAYBACK FORMULATION

1. Total cost of construction of main (excluding main connections) $_____

2. Divided by Total Length of Main in Feet _____ ft

3. Cost of Main per foot _____ per ft.

4. Fifty (50) feet times the cost of the feet _____ X 50ft
for each meter set on the said water line extension for the next ten years

PUBLIC SERVIC
OF KE
EFFECTIVE

MAY 1 1 2002

PURSUANT TO 807 KAR 5:011,
SECTION 9 (1)
BY Stephanie Bell
SECRETARY OF THE COMMISSION

DATE OF ISSUE _____ DATE EFFECTIVE _____
MONTH DATE YEAR MONTH DATE YEAR

ISSUED BY Ray Counce Chairman 1059 cr 1 Hy 80
SIGNATURE OF OFFICER TITLE ADDRESS
Somerset, Ky 42503

Exhibit (H)

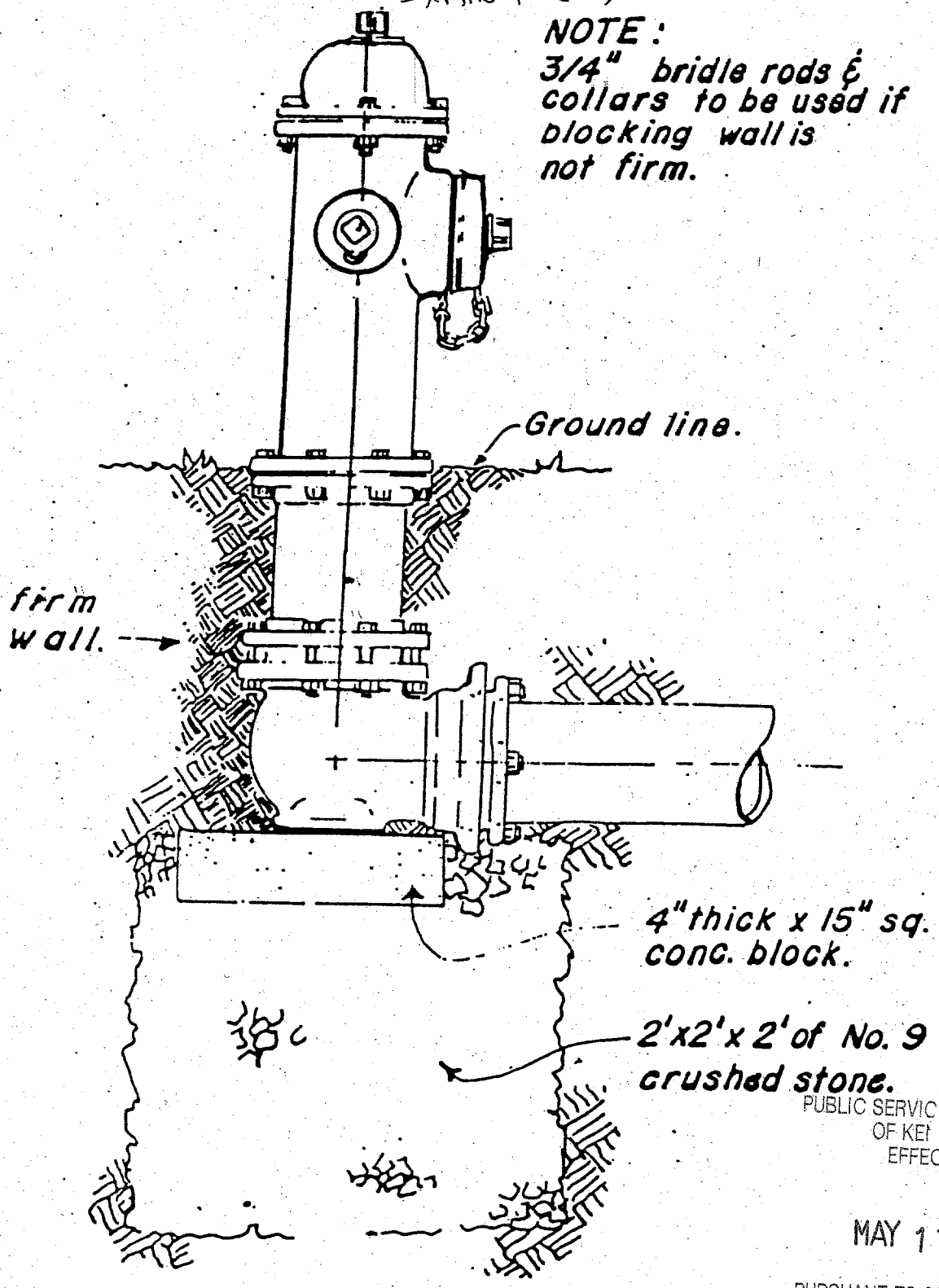

PUBLIC SERVIC
OF KEN
EFFECTIVE

MAY 1 1 2002

PURSUANT TO 807 KAR 5:011,
SECTION 9 (1)
BY Stephanie Bell
SECRETARY OF THE COMMISSION

Flush Hydrant Detail

on crushed rock or original ground. Box must be raised if it settles in 12 months.

Exhibit (1)

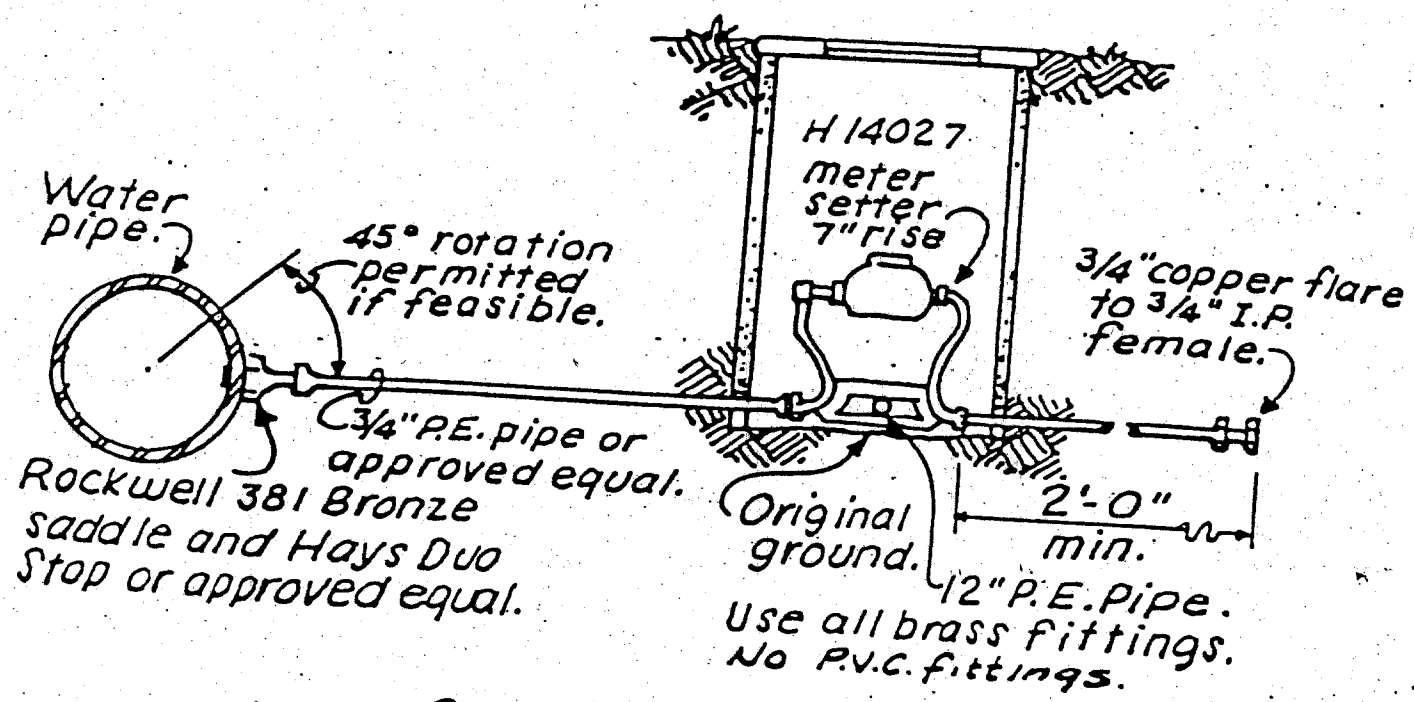

Service Connection

No scale

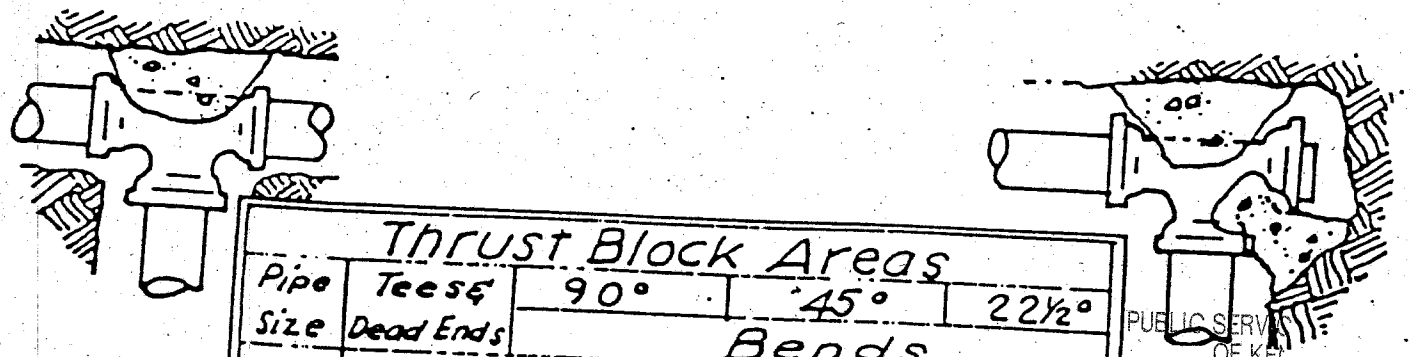

Thrust Block Areas				
Pipe Size	Tees & Dead Ends	90°	45°	22½°
		Bends		
3"	1 sq. ft.	1 sq. ft.	1 sq. ft.	0.5 sq. ft.
4"	1 " "	1.5 " "	1 " "	0.5 " "
6"	2 " "	3 " "	2 " "	1 " "
8"	4 " "	5 " "	3 " "	1.5 " "

Provide larger & sufficient area in soft or unstable soil.

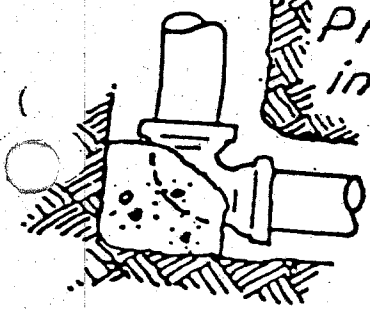

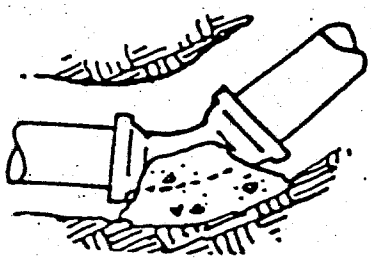

Typical Thrust-Block Details

PUBLIC SERVICE COMMISSION OF KENTUCKY
EFFECTIVE
MAY 11 2002
PURSUANT TO 807 KAR 5:011, SECTION 9 (1)
BY Stephanie Bell
SECRETARY OF THE COMMISSION

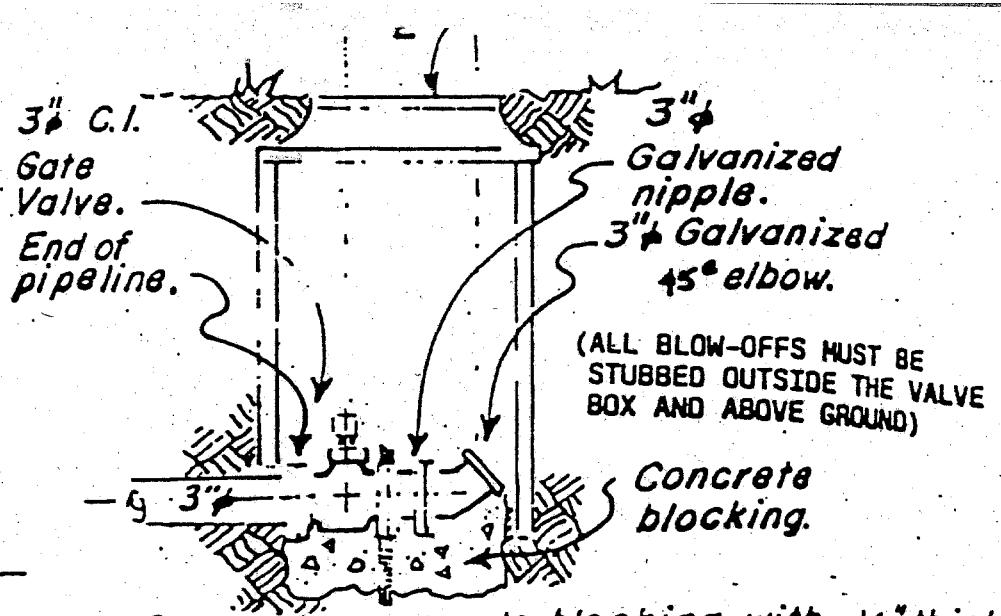

Note: Separate concrete blocking with ½" thick plywood so blow off can be removed later and 3"ϕ valve can be left in place.

Blowoff Details

No Scale

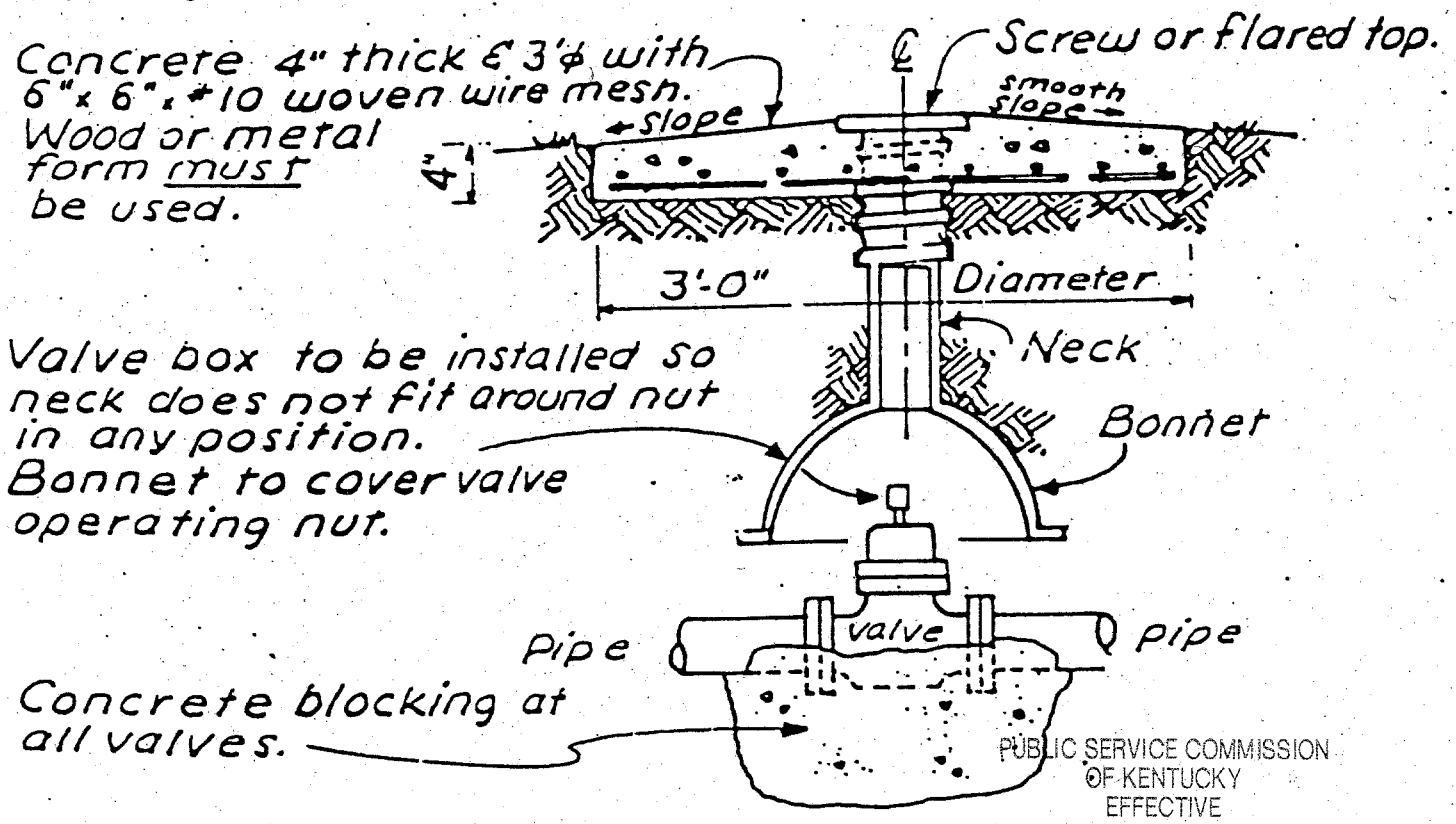

PUBLIC SERVICE COMMISSION OF KENTUCKY EFFECTIVE

MAY 11 2002

PURSUANT TO 807 KAR 5:011, SECTION 9 (1)

BY: Stephanie Bell

SECRETARY OF THE COMMISSION

Valve Box

No scale

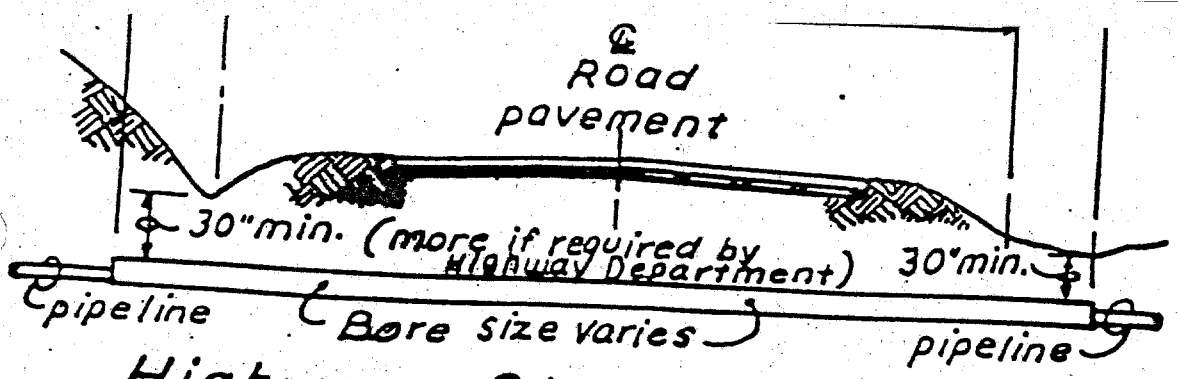

Highway - Street - Driveway Bore

No Scale

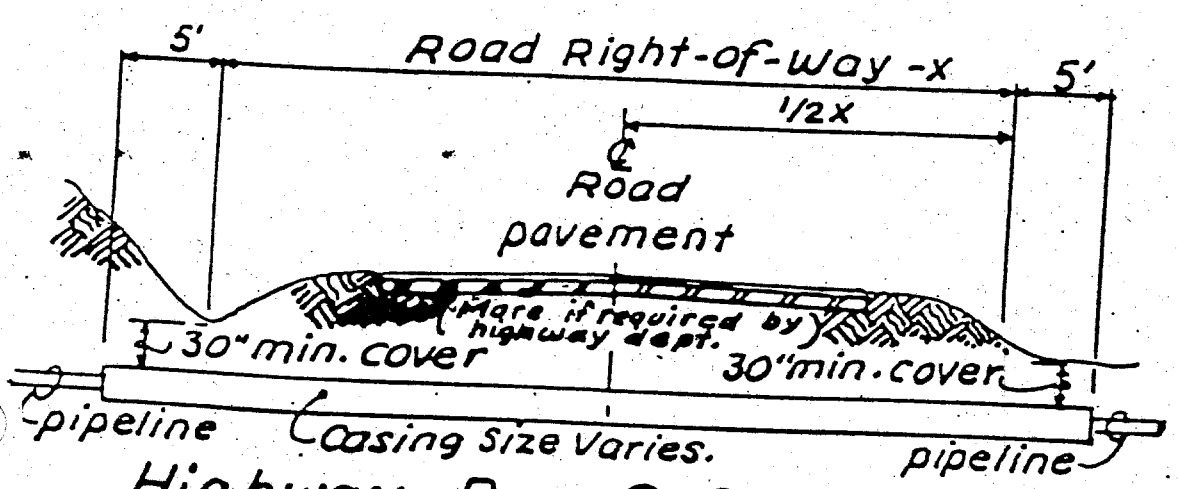

Highway Bore & Casing

No Scale

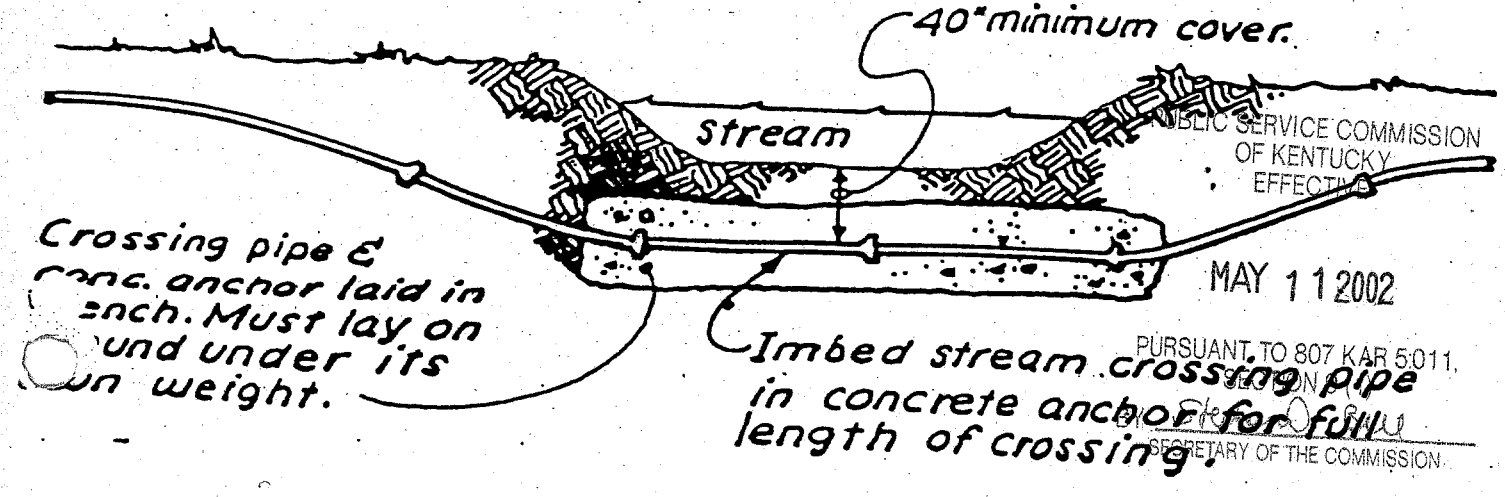

PUBLIC SERVICE COMMISSION
OF KENTUCKY
EFFECTIVE
MAY 11 2002
PURSUANT TO 807 KAR 5:011,
SECTION 9 (1)
BY: [illegible]
SECRETARY OF THE COMMISSION

Exhibit (L)

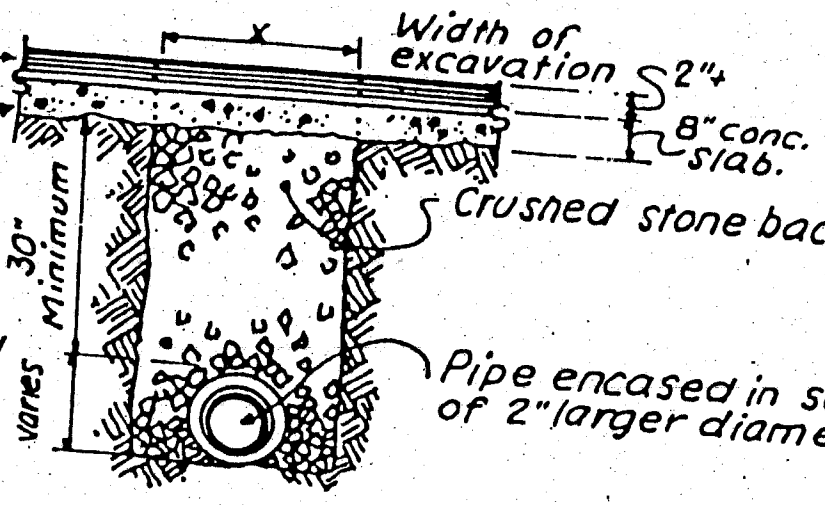

Open Trench Pipe Installation

No Scale

PUBLIC SERVICE COMMISSION
OF KENTUCKY
EFFECTIVE

MAY 11 2002

PURSUANT TO 807 KAR 5:011,
SECTION 9 (1)
BY Stephan O Bell
SECRETARY OF THE COMMISSION

Exhibit (m)

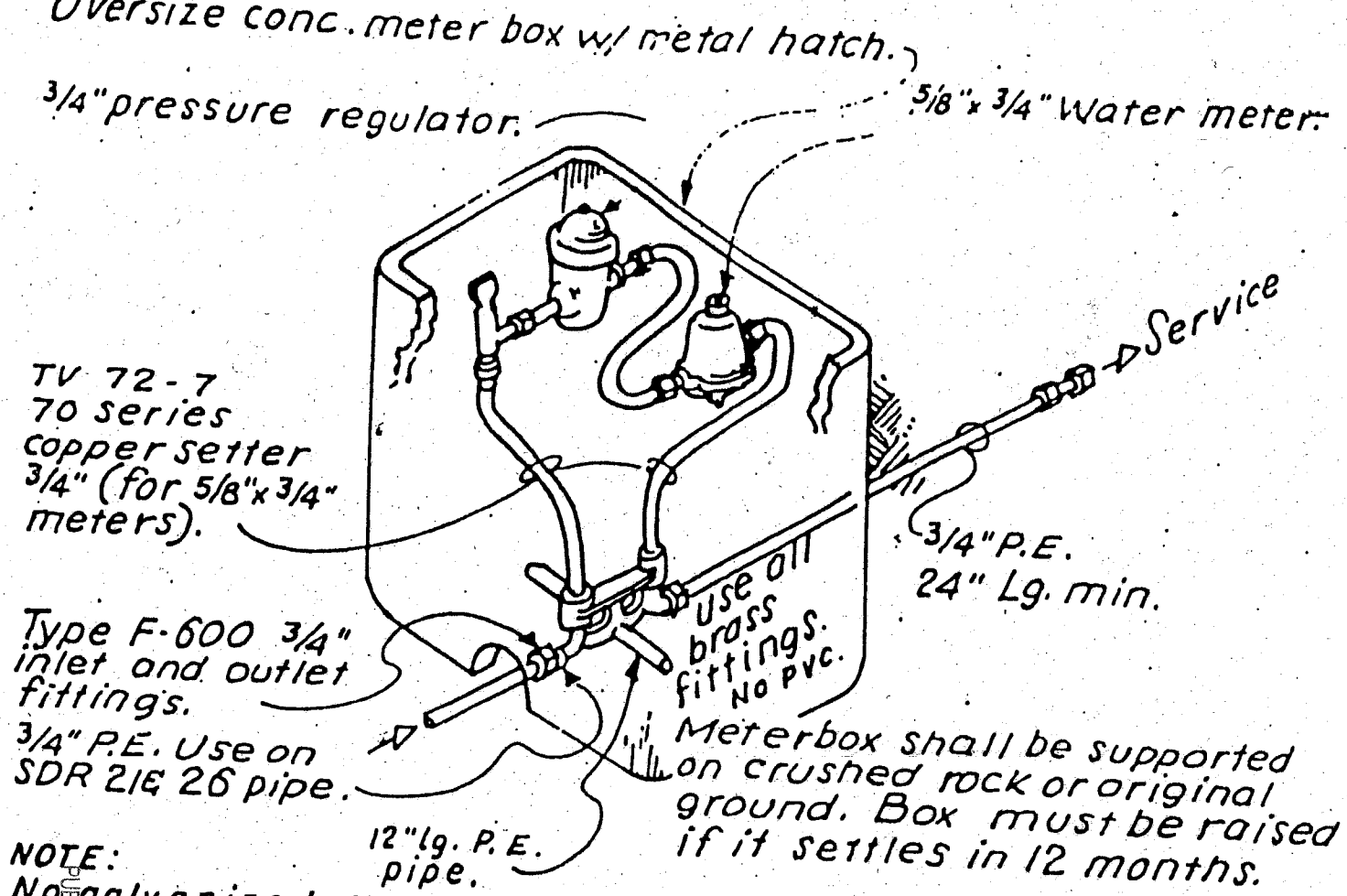

NOTE:
No galvanized fittings or pipe allowed. Use all brass fittings.

Service Connection and Pressure Regulator

No scale

PUBLIC SERVICE COMMISSION
OF KENTUCKY
EFFECTIVE

MAY 11 2002

PURSUANT TO 807 KAR 5:011,
SECTION 9 (1)
BY Stephanie Bell
SECRETARY OF THE COMMISSION