INTRASTATE ACCESS SERVICES TARIFF

Regulations, Rates and Charges
applying to the provision of Access Services
for Intrastate Customers within
the operating territory of

Windstream Kentucky West, Inc.

in the State of Kentucky
as provided herein.

Any questions concerning tariff references, should be
directed to this tariff's issuing individual at the
address indicated below:

Dan Logsdon, Vice President
Shepherdsville, Kentucky

This tariff cancels and replaces Windstream Kentucky West, Inc. (formerly Alltel Kentucky, Inc.)
P.S.C. KY Tariff No. 3 Intrastate Access Tariff
To Accommodate the Company Name Change

TARIFF BRANCH
RECEIVED
7/17/2006
PUBLIC SERVICE
COMMISSION
OF KENTUCKY

INTRASTATE ACCESS SERVICES TARIFF

ISSUING CARRIERS

None

TARIFF BRANCH
RECEIVED
7/17/2006
PUBLIC SERVICE
COMMISSION
OF KENTUCKY

ACCESS SERVICE

TABLE OF CONTENTS

	Page No.
ISSUING CARRIERS	Title 2
TABLE OF CONTENTS	1
CONCURRING CARRIERS	16
CONNECTING CARRIERS	16
OTHER PARTICIPATING CARRIERS	16
REGISTERED SERVICE MARKS	16
REGISTERED TRADEMARKS	16
EXPLANATION OF SYMBOLS	17
EXPLANATION OF ABBREVIATIONS	17
REFERENCE TO OTHER TARIFFS	19
REFERENCE TO TECHNICAL PUBLICATIONS	19
1. APPLICATION OF TARIFF	1-1
2. GENERAL REGULATIONS	2-1
2.1 Undertaking of the Telephone Company	2-1
2.1.1 Scope	2-1
2.1.2 Limitations	2-1
2.1.3 Liability	2-3
2.1.4 Provision of Services	2-7
2.1.5 Facility Terminations	2-7
2.1.6 Service Maintenance	2-7
2.1.7 Changes and Substitutions	2-8
2.1.8 Refusal and Discontinuance of Service	2-9
2.1.9 Notification of Service-Affecting Activities	2-11
2.1.10 Coordination with Respect to Network Contingencies	2-11
2.1.11 Provision and Ownership of Telephone Numbers	2-11
2.2 Use	2-12
2.2.1 Interference or Impairment	2-12
2.2.2 Unlawful and Abusive Use	2-12

TARIFF BRANCH
RECEIVED
7/17/2006
PUBLIC SERVICE
COMMISSION
OF KENTUCKY

ACCESS SERVICE

TABLE OF CONTENTS (Cont'd)

			Page No.
2.	GENERAL REGULATIONS		
2.3	Obligations of the Customer		2-13
	2.3.1	Damages	2-13
	2.3.2	Ownership of Facilities and Theft	2-13
	2.3.3	Equipment Space and Power	2-13
	2.3.4	Availability for Testing	2-13
	2.3.5	Limitation of Use of Metallic Facilities	2-13
	2.3.6	Balance	2-14
	2.3.7	Design of Customer Services	2-14
	2.3.8	References to the Telephone Company	2-14
	2.3.9	Claims and Demands for Damages	2-14
	2.3.10	Coordination with Respect to Network Contingencies	2-15
	2.3.11	Jurisdictional Report and Certification Requirements	2-15
	2.3.12	Determination of Intrastate Charges for Mixed Interstate and Intrastate Access Switched Access Service	2-20
	2.3.13	Determination of IntraLATA Charges for Mixed InterLATA and IntraLATA Switched Access Services	2-21
2.4	Payment Arrangements and Credit Allowances		2-21
	2.4.1	Payment of Rates, Charges and Deposits	2-21
	2.4.2	Minimum Periods	2-28
	2.4.3	Cancellation of an Order for Service	2-29
	2.4.4	Credit Allowance for Service Interruptions	2-29
	2.4.5	Re-establishment of Service Following Fire, Flood or Other Occurrence	2-35
	2.4.6	Title or Ownership Rights	2-36
	2.4.7	Access Services Provided By More Than One Telephone Company	2-36
2.5	Connections		2-47
2.6	Definitions		2-48

TARIFF BRANCH
RECEIVED
7/17/2006
PUBLIC SERVICE
COMMISSION
OF KENTUCKY

ACCESS SERVICE

TABLE OF CONTENTS (Cont'd)

			Page No.
3.	CARRIER COMMON LINE ACCESS SERVICE		3-1
3.1	General Description		3-1
3.2	Limitations		3-1
	3.2.1	Exclusions	3-1
	3.2.2	Access Groups	3-1
	3.2.3	WATS Access Lines	3-2
3.3	Undertaking of the Telephone Company		3-2
	3.3.1	Provision of Service	3-2
	3.3.2	Interstate and Intrastate Use	3-2
3.4	Obligations of the Customer		3-2
	3.4.1	Switched Access Service Requirement	3-2
	3.4.2	Supervision	3-2
3.5	Determination of Usage Subject to Carrier Common Line Access Charges		3-3
	3.5.1	Determination of Jurisdiction	3-3
	3.5.2	Cases Involving Usage Recording by the Customer	3-3
	3.5.3	Local Exchange Access and the Enhanced Services Exemption	3-3
3.6	Resold Services		3-4
	3.6.1	Scope	3-4
	3.6.2	Customer Obligations Concerning the Resale of MTS and MTS-type Services	3-4
	3.6.3	Resale Documentation Provided by the Customer	3-5
	3.6.4	Rate Regulations Concerning the Resale of MTS and MTS-type Services	3-5

TARIFF BRANCH
RECEIVED
7/17/2006
PUBLIC SERVICE
COMMISSION
OF KENTUCKY

ACCESS SERVICE

TABLE OF CONTENTS (Cont'd)

			Page No.
3.	**CARRIER COMMON LINE ACCESS SERVICE (Cont'd)**		
3.7	**Coin Services**		3-10
	3.7.1	Collection and Remittance of Coin Station Monies	3-10
	3.7.2	Detail Concerning Coin Station Monies	3-10
	3.7.3	Payment of Coin Sent-Paid Monies	3-11
3.8	**Rate Regulations**		3-13
	3.8.1	Billing of Charges	3-13
	3.8.2	Measuring and Recording of Call Detail	3-13
	3.8.3	Unmeasured Feature Group A and B Usage	3-13
	3.8.4	Percent Interstate Use (PIU)	3-13
	3.8.5	Determination of Premium and Non-Premium Charges	3-14
3.9	**Non-Traffic Sensitive Revenue Charge**		3-16
	3.9.1	General Description	3-16
	3.9.2	Determination of Monthly NTS Revenue Requirement	3-16
	3.9.3	Billing of the NTSR Charge	3-17
4.	**RESERVED**		4-1

TARIFF BRANCH
RECEIVED
7/17/2006
PUBLIC SERVICE
COMMISSION
OF KENTUCKY

ACCESS SERVICE

TABLE OF CONTENTS (Cont'd)

			Page No.
5.	ACCESS ORDERING		5-1
5.1	General		5-1
	5.1.1	Service Installation	5-2
	5.1.2	Expedited Orders	5-3
	5.1.3	Selection of Facilities for Access Orders	5-3
5.2	Ordering Requirements		5-4
	5.2.1	Switched Access Service	5-5
	5.2.2	Special Access Service	5-9
	5.2.3	WATS or WATS-type Service	5-10
	5.2.4	Mixed Use Facilities - Switched and Special Access	5-11
	5.2.5	Miscellaneous Services	5-11
5.3	Access Orders for Services Provided by More Than One Telephone Company		5-12
	5.3.1	Non Meet Point Billing Ordering	5-12
	5.3.2	Meet Point Billing Ordering	5-12
5.4	Charges Associated with Access Ordering		5-14
	5.4.1	Access Order Charge	5-14
	5.4.2	Miscellaneous Service Order Charge	5-16
	5.4.3	Access Order Change Charges	5-17
5.5	Minimum Periods and Cancellations		5-19
	5.5.1	Minimum Periods	5-19
	5.5.2	Development of Minimum Period Charges	5-19
	5.5.3	Cancellation of an Access Order	5-20
	5.5.4	Partial Cancellation Charge	5-21

TARIFF BRANCH
RECEIVED
7/17/2006
PUBLIC SERVICE
COMMISSION
OF KENTUCKY

ACCESS SERVICE

TABLE OF CONTENTS (Cont'd)

			Page No.
6.	SWITCHED ACCESS SERVICE		6-1
6.1	General		6-1
	6.1.1	Description and Provision of Switched Access Service Arrangements	6-1
	6.1.2	Ordering Options and Conditions	6-4
	6.1.3	Rate Categories	6-4
	6.1.4	Special Facilities Routing	6-20
	6.1.5	Design Layout Report	6-20
6.2	Undertaking of the Telephone Company		6-20
	6.2.1	Network Management	6-20
	6.2.2	Transmission Specifications	6-21
	6.2.3	Provision of Service Performance Data	6-21
	6.2.4	Testing	6-22
	6.2.5	Determination of Number of Transmission Paths	6-22
	6.2.6	Trunk Group Measurement Reports	6-23
6.3	Obligations of the Customer		6-23
	6.3.1	Report Requirements	6-23
	6.3.2	Trunk Group Measurement Reports	6-24
	6.3.3	Supervisory Signaling	6-24
	6.3.4	Short Duration Mass Calling Requirements	6-24

TARIFF BRANCH
RECEIVED
7/17/2006
PUBLIC SERVICE
COMMISSION
OF KENTUCKY

ACCESS SERVICE

TABLE OF CONTENTS (Cont'd)

			Page No.
6.	SWITCHED ACCESS SERVICE (Cont'd)		
6.4	Rate Regulations		6-25
	6.4.1	Description and Application of Rates and Charges	6-25
	6.4.2	Minimum Monthly Charge	6-38
	6.4.3	Change of Switched Access Service Arrangements	6-38
	6.4.4	Moves	6-39
	6.4.5	Local Information Delivery Services	6-39
	6.4.6	Mileage Measurement	6-40
	6.4.7	Mixed Use	6-43
	6.4.8	Message Unit Credit for Feature Group A	6-43
	6.4.9	Application of Rates for Feature Group A Extension Service	6-43
6.5	Description and Provision of Feature Group A (FGA)		6-44
	6.5.1	Description	6-44
	6.5.2	Optional Features	6-46
	6.5.3	Optional Features Provided in Local Tariffs	6-48
	6.5.4	Measuring Access Minutes	6-48
	6.5.5	Testing Capabilities	6-51
6.6	Description and Provision of Feature Group B (FGB)		6-52
	6.6.1	Description	6-52
	6.6.2	Optional Features	6-55
	6.6.3	Design and Traffic Routing	6-56
	6.6.4	Measuring Access Minutes	6-56
	6.6.5	Testing Capabilities	6-59
6.7	Description and Provision of Feature Group C (FGC)		6-60
	6.7.1	Description	6-60
	6.7.2	Optional Features	6-63
	6.7.3	Design and Traffic Routing	6-65
	6.7.4	Measuring Access Minutes	6-65
	6.7.5	Design Blocking Probability	6-68
	6.7.6	Testing Capabilities	6-70

TARIFF BRANCH
RECEIVED
7/17/2006
PUBLIC SERVICE
COMMISSION
OF KENTUCKY

ACCESS SERVICE

TABLE OF CONTENTS (Cont'd)

			Page No.
6.	**SWITCHED ACCESS SERVICE (Cont'd)**		
6.8	**Description and Provision of Feature Group D (FGD)**		6-71
	6.8.1	Description	6-71
	6.8.2	Optional Features	6-74
	6.8.3	Design and Traffic Routing	6-76
	6.8.4	Measuring Access Minutes	6-77
	6.8.5	Design Blocking Probability	6-79
	6.8.6	Network Blocking Charge6-81	
	6.8.7	Testing Capabilities	6-81
6.9	**Interim Access**		6-82
	6.9.2	Abbreviated Dialing Arrangement	6-82
6.10	**Chargeable and Nonchargeable Optional Features**		6-82
	6.10.1	Common Switching Nonchargeable Optional Features	6-83
	6.10.2	Transport Termination Nonchargeable Optional Features	6-95
	6.10.3	Chargeable Optional Features	6-96

TARIFF BRANCH
RECEIVED
7/17/2006
PUBLIC SERVICE
COMMISSION
OF KENTUCKY

ACCESS SERVICE

TABLE OF CONTENTS (Cont'd)

			Page No.
7.	SPECIAL ACCESS SERVICE		7-1
7.1	General		7-1
	7.1.1	Channel Types	7-1
	7.1.2	Service Descriptions	7-4
	7.1.3	Service Configurations	7-6
	7.1.4	Alternate Use	7-11
	7.1.5	Special Facilities Routing	7-11
	7.1.6	Design Layout Report	7-11
	7.1.7	Acceptance Testing	7-12
	7.1.8	Ordering Options and Conditions	7-12
7.2	Rate Regulations		7-13
	7.2.1	Rate Categories	7-13
	7.2.2	Types of Rates and Charges	7-17
	7.2.3	Moves	7-19
	7.2.4	Minimum Periods	7-20
	7.2.5	Mileage Measurement	7-20
	7.2.6	Facility Hubs	7-22
	7.2.7	Mixed Use Analog and Digital High Capacity Services	7-23
	7.2.8	High Capacity Optional Rate Plans	7-24
7.3	Surcharge For Special Access Service		7-30
	7.3.1	General	7-30
	7.3.2	Application	7-30
	7.3.3	Exemption of Special Access Service	7-31
	7.3.4	Rate Regulations	7-32
7.4	Metallic Service		7-33
	7.4.1	Basic Channel Description	7-33
	7.4.2	Technical Specifications Packages and Network Channel Interfaces	7-33
	7.4.3	Optional Features and Functions	7-33
7.5	Telegraph Grade Service		7-34
	7.5.1	Basic Channel Description	7-34
	7.5.2	Technical Specifications Packages and Network Channel Interfaces	7-34
	7.5.3	Optional Features and Functions	7-34

TARIFF BRANCH
RECEIVED
7/17/2006
PUBLIC SERVICE
COMMISSION
OF KENTUCKY

ACCESS SERVICE

TABLE OF CONTENTS (Cont'd)

			Page No.
7.	SPECIAL ACCESS SERVICE (Cont'd)		
7.6	Voice Grade Service		7-35
	7.6.1	Basic Channel Description	7-35
	7.6.2	Technical Specifications Packages and Network Channel Interfaces	7-35
	7.6.3	Optional Features and Functions	7-35
7.7	Program Audio Service		7-41
	7.7.1	Basic Channel Description	7-41
	7.7.2	Technical Specifications Packages and Network Channel Interfaces	7-41
	7.7.3	Optional Features and Functions	7-41
7.8	Video Service		7-42
	7.8.1	Basic Channel Description	7-42
	7.8.2	Technical Specifications Packages and Network Channel Interfaces	7-42
7.9	Digital Data Service		7-43
	7.9.1	Basic Channel Description	7-43
	7.9.2	Technical Specifications Packages and Network Channel Interfaces	7-43
	7.9.3	Optional Features and Functions	7-44
7.10	High Capacity Service		7-45
	7.10.1	Basic Channel Description	7-45
	7.10.2	Technical Specifications Packages and Network Channel Interfaces	7-45
	7.10.3	Optional Features and Functions	7-46
7.11	Individual Case Filings		7-48

TARIFF BRANCH
RECEIVED
7/17/2006
PUBLIC SERVICE
COMMISSION
OF KENTUCKY

ACCESS SERVICE

TABLE OF CONTENTS (Cont'd)

			Page No.
8.	BILLING AND COLLECTION SERVICES		8-1
8.1	Recording Service		8-1
	8.1.1	General Description	8-1
	8.1.2	Undertaking of the Telephone Company	8-1
	8.1.3	Liability of the Telephone Company	8-3
	8.1.4	Obligations of the Customer	8-3
	8.1.5	Payment Arrangements and Audit Provision	8-4
	8.1.6	Rate Regulations	8-5
8.2	Billing Service		8-6
	8.2.1	Message Billing Service	8-6
	8.2.2	Private Line Billing Service	8-27
	8.2.3	Purchase of Accounts Receivable	8-40
	8.2.4	Billing Arrangements When the Telephone Company Acts as Billing Agent for the Customer	8-45
	8.2.5	Clearing House Provisions	8-45
8.3	Billing Analysis Service		8-48
	8.3.1	General Description	8-48
	8.3.2	Undertaking of the Telephone Company	8-48
	8.3.3	Liability of the Telephone Company	8-53
	8.3.4	Obligations of the IC	8-54
	8.3.5	Payment Arrangements	8-55
	8.3.6	Rate Regulations	8-56
8.4	Billing Information Service		8-57
	8.4.1	General Description	8-57
	8.4.2	Undertaking of the Telephone Company	8-57
	8.4.3	Liability of the Telephone Company	8-62
	8.4.4	Obligations of the Customer	8-63
	8.4.5	Payment Arrangements	8-64
	8.4.6	Rate Regulations	8-65
8.5	Rates		8-66
9.	RESERVED		9-1

TARIFF BRANCH
RECEIVED
7/17/2006
PUBLIC SERVICE
COMMISSION
OF KENTUCKY

ACCESS SERVICE

TABLE OF CONTENTS (Cont'd)

			Page No.
10.	**SPECIAL FEDERAL GOVERNMENT ACCESS SERVICES**		10-1
10.1	**General**		10-1
10.2	**Emergency Conditions**		10-1
10.3	**Facility Availability**		10-2
10.4	**Federal Government Regulations**		10-2
10.5	**Service Offerings to the Federal Government**		10-3
	10.5.1	Type and Description	10-3
	10.5.2	Mileage Application	10-5
10.6	**Rates and Charges**		10-6
	10.6.1	General	10-6
	10.6.2	Voice Grade Special Access	10-6
	10.6.3	Move Charges	10-6
11.	**SPECIAL FACILITIES ROUTING OF ACCESS SERVICES**		11-1
11.1	**Description**		11-1
	11.1.1	Diversity	11-1
	11.1.2	Avoidance	11-1
	11.1.3	Diversity and Avoidance Combined	11-1
	11.1.4	Cable-Only Facilities	11-1
12.	**SPECIALIZED SERVICE OR ARRANGEMENTS**		12-1
12.1	**General**		12-1

TARIFF BRANCH
RECEIVED
7/17/2006
PUBLIC SERVICE
COMMISSION
OF KENTUCKY

ACCESS SERVICE
TABLE OF CONTENTS (Cont'd)

			Page No.
13.	ADDITIONAL ENGINEERING, ADDITIONAL LABOR AND MISCELLANEOUS SERVICES		13-1
13.1	Additional Engineering		13-1
13.2	Additional Labor		13-2
	13.2.1	Overtime Installation	13-2
	13.2.2	Overtime Repair	13-2
	13.2.3	Stand by	13-2
	13.2.4	Testing and Maintenance with Other Telephone Companies	13-2
	13.2.5	Other Labor	13-2
13.3	Miscellaneous Services		13-3
	13.3.1	Testing Services	13-3
	13.3.2	Maintenance of Service	13-7
	13.3.3	Telecommunications Service Priority	13-7
	13.3.4	Miscellaneous Equipment	13-8
13.4	Presubscription		13-9
	13.4.1	InterLATA Presubscription	13-9
	13.4.2	IntraLATA Presubscription	13-12
13.5	Verification of Telemarketing Orders for PIC Change		13-13
13.6	Unauthorized PIC Change		13-15
13.7	Blocking Service	13-15	
13.8	Reserved		
13.9	Billing Name and Address Service		13-16
	13.9.1	General Description	13-16
	13.9.2	Undertaking of the Telephone Company	13-16
	13.9.3	Obligations of the Customer	13-17
	13.9.4	Rate Regulations	13-18
13.10	Reserved		13-18
13.11	Reserved		13-18
13.12	Reserved		13-18
13.13	Access Services Billing		13-19

TARIFF BRANCH
RECEIVED
7/17/2006
PUBLIC SERVICE
COMMISSION
OF KENTUCKY

ACCESS SERVICE

TABLE OF CONTENTS (Cont'd)

			Page No.
14.	EXCEPTIONS TO ACCESS SERVICE OFFERINGS		14-1
15.	ACCESS SERVICE INTERFACES AND TRANSMISSION SPECIFICATIONS		15-1
15.1	Switched Access Service		15-1
	15.1.1	Local Transport Interface Groups	15-1
	15.1.2	Standard Transmission Specifications	15-10
	15.1.3	Data Transmission Parameters	15-18
15.2	Special Access Service		15-22
	15.2.1	Network Channel (NC) Codes	15-25
	15.2.2	Network Channel Interface (NCI) Codes	15-34
16.	RESERVED		16-1
17.	RATES AND CHARGES		17-1
17.1	Common Line Access Service		17-1
	17.1.1	Carrier Common Line Access Service	17-1
	17.1.2	Non-Traffic Sensitive Revenue	17-2
17.2	Switched Access Service		17-3
	17.2.1	Nonrecurring Charges	17-3
	17.2.2	Local Transport	17-4
	17.2.3	End Office	17-7
	17.2.4	FGB with ADA Rate Factor	17-8
	17.2.5	Reserved	17-8
	17.2.6	Assumed Minutes of Use	17-9

TARIFF BRANCH
RECEIVED
7/17/2006
PUBLIC SERVICE
COMMISSION
OF KENTUCKY

ACCESS SERVICE

TABLE OF CONTENTS (Cont'd)

			Page No.
17.	RATES AND CHARGES		17-1
17.3	Special Access Service		17-10
	17.3.1	Surcharge for Special Access Service	17-10
	17.3.2	Metallic Service	17-10
	17.3.3	Telegraph Grade Service	17-11
	17.3.4	Voice Grade Service	17-12
	17.3.5	Program Audio Service	17-17
	17.3.6	Video Service	17-19
	17.3.7	Digital Data Service	17-20
	17.3.8	High Capacity Service	17-22
	17.3.9	Individual Case Filings	17-26
17.4	Other Services		17-27
	17.4.1	Access Ordering	17-27
	17.4.2	Additional Engineering	17-28
	17.4.3	Additional Labor	17-29
	17.4.4	Miscellaneous Services	17-31
	17.4.5	Special Federal Government Access Services	17-37
	17.4.6	Special Facilities Routing of Access Services	17-38
	17.4.7	Specialized Service or Arrangements	17-39
17.5	Billing and Collection Services		17-40
	17.5.1	Recording Service	17-40
	17.5.2	Message Billing Service	17-41
	17.5.3	Private Line Billing Service	17-47
	17.5.4	Billing Analysis Service	17-49
	17.5.5	Billing Information Service	17-50

TARIFF BRANCH
RECEIVED
7/17/2006
PUBLIC SERVICE
COMMISSION
OF KENTUCKY

INTRASTATE ACCESS SERVICES TARIFF

CONCURRING CARRIERS

NO CONCURRING CARRIERS

CONNECTING CARRIERS

NO CONNECTING CARRIERS

OTHER PARTICIPATING CARRIERS

NO OTHER PARTICIPATING CARRIERS

REGISTERED SERVICE MARKS	REGISTERED TRADEMARKS
NONE	NONE

TARIFF BRANCH
RECEIVED
7/17/2006
PUBLIC SERVICE
COMMISSION
OF KENTUCKY

INTRASTATE ACCESS SERVICES TARIFF

EXPLANATION OF SYMBOLS

(C) - To signify changed regulation
(D) - To signify discontinued rate or regulation
(I) - To signify increase
(M) - To signify matter relocated from one page to another without change
(N) - To signify new rate or regulation
(R) - To signify reduction to a rate or charge
(S) - To signify reissued matter without change
(T) - To signify a change in text but no change in rate or regulation
(Z) - To signify a correction

EXPLANATION OF ABBREVIATIONS

ADA	-	Abbreviated Dialing Arrangement
ADM	-	Add/Drop Multiplexing
AML	-	Actual Measured Loss
ANI	-	Automatic Number Identification
AP	-	Program Audio
AT&T	-	American Telephone and Telegraph Company
BHMC	-	Busy Hour Minutes of Capacity
CCS	-	Common Channel Signaling
CDP	-	Customer Designated Premises
CI	-	Channel Interface
CIR	-	Committed Information Rate
CNP	-	Charge Number Parameter
CO	-	Central Office
Cont'd	-	Continued
CPE	-	Customer Provided Equipment
CPN	-	Calling Party Number
CSP	-	Carrier Selection Parameter
DA	-	Directory Assistance
dB	-	decibel
dBrnC	-	Decibel Reference Noise C-Message Weighting
dBrnCO	-	Decibel Reference Noise C-Message Weighted O
dc	-	direct current
DDD	-	Direct Distance Dialing
EAS	-	Extended Area Service
EDD	-	Envelope Delay Distortion
EML	-	Expected Measured Loss
EPL	-	Echo Path Loss
ERL	-	Echo Return Loss
ESS	-	Electronic Switching System
ESSX	-	Electronic Switching System Exchange
f	-	frequency
FCC	-	Federal Communications Commission

TARIFF BRANCH
RECEIVED
7/17/2006
PUBLIC SERVICE
COMMISSION
OF KENTUCKY

INTRASTATE ACCESS SERVICES TARIFF

EXPLANATION OF ABBREVIATIONS (Cont'd)

HC	-	High Capacity
Hz	-	Hertz
IC	-	Interexchange Carrier
ICB	-	Individual Case Basis
ICL	-	Inserted Connection Loss
kbps	-	kilobits per second
kHz	-	kilohertz
LAN	-	Local Area Network
LATA	-	Local Access and Transport Area
ma	-	milliamperes
Mbps	-	Megabits per second
mcs	-	Microsecond
MHz	-	Megahertz
MRC	-	Monthly Recurring Charge
MT	-	Metallic
MTS	-	Message Telecommunications Service(s)
NPA	-	Numbering Plan Area
NRC	-	Nonrecurring Charge
NXX	-	Three-Digit Central Office Prefix
OC	-	Optical Carrier
OLT	-	Optical Line Termination
PBX	-	Private Branch Exchange
PIC	-	Presubscribed Interexchange Carrier
POT	-	Point of Termination
PVC	-	Permanent Virtual Connection
SAC	-	Service Access Code
SNAL	-	Signaling Network Access Line
SONET	-	Synchronous Optical Network
SP	-	Signaling Point
SPOI	-	Signaling Point of Interface
SRL	-	Singing Return Loss
SSP	-	Service Switching Point
SS7	-	Signaling System 7
STP	-	Signal Transfer Point
STS	-	Synchronous Transport Signal
SWC	-	Serving Wire Center
TG	-	Telegraph Grade
TLP	-	Transmission Level Point
TV	-	Television
VG	-	Voice Grade
V & H	-	Vertical & Horizontal
WATS	-	Wide Area Telecommunications Service(s)
WSC	-	Wireless Switching Center
WSO	-	WATS Serving Office

TARIFF BRANCH
RECEIVED
7/17/2006
PUBLIC SERVICE
COMMISSION
OF KENTUCKY

INTRASTATE ACCESS SERVICES TARIFF

REFERENCE TO OTHER TARIFFS

Whenever reference is made to the FCC the PSC should be substituted. Whenever interstate service is referenced, intrastate should be substituted. This tariff has been filed as an intrastate version of an interstate tariff. Should there be discrepancies or minor irregularities, the intent of the tariff shall apply.

Whenever reference is made in this tariff to other tariffs of the Telephone Company, the reference is to the tariffs in force as of the effective date of this tariff, and to amendments thereto and successive issues thereof.

The following tariff is referenced in this tariff and may be obtained from the Federal Communications Commission's commercial contractor.

National Exchange Carrier
Association, Inc.
Special Construction
Tariff F.C.C. No. 3

National Exchange Carrier
Association, Inc.
Wire Center Information
Tariff F.C.C. No. 4

REFERENCE TO TECHNICAL PUBLICATIONS

The following technical publications are referenced in this tariff and may be obtained from Bell Communications Research, Inc., Customer Services, 60 New England Ave., Piscataway, NJ 08854-4196.

Technical Reference:

Multiple Exchange Carrier Access Billing (MECAB) Guidelines
Issued: June 1994

Multiple Exchange Carrier Ordering and Design (MECOD) Guidelines
Issued: May 1994

PUB 41004 Data Communications Using Voiceband Private Line Channels
Issued: October, 1973

PUB 62310 (MDP-326-726) Digital Data System Channel Interface Specification
Issued: September, 1983

PUB 62411 High Capacity Digital Service Channel Interface
Issued: September, 1983, Addendum October 1984

TR-NPL-000258 Compatibility Information for Feature Group D Switched Access Service
Issued: October 1985

GR-334-CORE Issue 1 Switched Access Service:
Transmission Parameter Limits and Interface Combinations
Issued: June 1994

TARIFF BRANCH
RECEIVED
7/17/2006
PUBLIC SERVICE
COMMISSION
OF KENTUCKY

INTRASTATE ACCESS SERVICES TARIFF

REFERENCE TO TECHNICAL PUBLICATIONS (Cont'd)

TR-NWT-000334 Issue 2 Voice Grade Switched Access Service
Transmission Parameter Limits and Interface Combinations
Issued: September, 1990

TR-TSY-000335, Issue 2 Voice Grade Special Access - Transmission Parameter Limits and Interface Combinations
Issued: May, 1990

TR-NPL-000336 Metallic and Telegraph Grade Special Access Services Transmission Parameter Limits and interface combinations
Issued: October, 1987

TR-NPL-000337 Program Audio Special Access Service and Local Channel Services
Issued: July, 1987

TR-NPL-000338 Television Special Access and Local Channel Services Transmission Parameter Limits and Interface Combinations
Issued: December, 1986

TR-NWT-000341 Digital Data Special Access Service - Transmission Parameter Limits and Interface Combinations
Issued: Issue 2, February, 1993

TR-INS-000342 High Capacity Digital Special Access Service
Issued: February, 1991

SR-STS-000307 Issue 5 NC/NCI Code Dictionary
Issued: May, 1994

TR-TSY-000506 LATA Switching Systems Generic Requirements (LSSGR) Section 6
Issued: October 1987, Revised December 1988, Revised June 1990

TR-NPL-000054 High Capacity Digital Service (1.544 Mbs) Interface Generic Requirements for End Users
Issued: April 1989
Available: April 1989

TR-TSV-000905 Common Channel Signaling Network Interface Specification Supplement 1
Available: August 1989

TARIFF BRANCH
RECEIVED
7/17/2006
PUBLIC SERVICE
COMMISSION
OF KENTUCKY

INTRASTATE ACCESS SERVICES TARIFF

REFERENCE TO TECHNICAL PUBLICATIONS (Cont'd)

The following technical publication is referenced in this tariff and may be obtained from the National Exchange Carrier Association, Inc., Director - Access Tariff, 100 So. Jefferson Road, Whippany, NJ 07981 and the Federal Communications Commission's commercial contractor.

PUB AS No. 1, Issue II Access Service
Issued: May 1984
Addendum: March 1987

The following publications are referenced in this tariff and may be obtained from the Government Printing Office, Superintendent of Documents, Document Control Branch, 941 N. Capital St., N.E., Washington, D.C. 20401.

Telecommunications Service Priority (TSP) System for National Security Emergency Preparedness (NSEP) Service Vendor Handbook, National Communications System (NCSH 3-1-2).

Issued: July 1990
Available: August 1990

Telecommunication Service Priority (TSP) System for National Security Emergency Preparedness (NSEP) Service User Manual, National Communications System (NCSM 3-1-1).

Issued: July 1990
Available: August 1990

TARIFF BRANCH
RECEIVED
7/17/2006
PUBLIC SERVICE
COMMISSION
OF KENTUCKY

INTRASTATE ACCESS SERVICES TARIFF

REFERENCE TO TECHNICAL PUBLICATIONS (Cont'd)

The following technical publications are referenced in this tariff and may be obtained from American National Standards Institute, 1430 Broadway, New York, New York 10018.

ANSI T1.102-1993, Digital Hierarchy - Electrical Interfaces.

ANSI T1.105-1995, Synchronous Optical Network (SONET) - Basic Description including Multiplex Structure, Rates and Formats.

ANSI T1. 602-1989, Integrated Services Digital Network (ISDN) - Data-Link Layer Signalling Specification for Application at the User-Network Interface.

ANSI T1. 606-1990, Integrated Services Digital Network (ISDN) - Architectural Framework and Service Description for Frame-Relaying Bearer Service.

ANSI T1. 606a-1992, Supplement to ANSI T1.606-1990 Integrated Services Digital Network (ISDN) - Architectural Framework and Service Description for Frame-Relaying Bearer Service (Congestion Management and Frame Size).

ANSI T1. 606b-1993, Supplement to ANSI T1. 606-1990 Integrated Services Digital Network (ISDN) - Architectural Framework and Service Description for Frame-Relaying Bearer Service (Network-to-Network Interface Requirements).

ANSI T1. 617-1991, Integrated Services Digital Network (ISDN) - Signaling Specification for Frame Relay Bearer Service for Digital Subscriber Signaling System Number 1 (DSS1).

ANSI T1. 617a-1994, Integrated Services Digital Network (ISDN) - Signaling Specification for Frame Relay Bearer Service for Digital Subscriber Signaling System Number 1 (DSS1) Protocal Encapsulation and PICS.

ANSI T1. 618-1991, Integrated Services Digital Network (ISDN) - Core Aspects of Frame Protocol for Use with Frame Relay Bearer Service.

TARIFF BRANCH
RECEIVED
7/17/2006
PUBLIC SERVICE
COMMISSION
OF KENTUCKY

INTRASTATE ACCESS SERVICES TARIFF

1. **Application of Tariff**

1.1 This tariff contains regulations, rates and charges applicable to the provision of Carrier Common Line, Switched Access, Special Access, and other services, hereinafter referred to collectively as service(s). These services are provided to customers by the Issuing Carriers of this tariff, hereinafter the Telephone Company. This tariff also contains Access Ordering regulations and charges that are applicable when these services are ordered or modified by the customer

1.2 The provision of such services by the Telephone Company as set forth in this tariff does not constitute a joint undertaking with the customer for the furnishing of any service.

1.3 Pursuant to the May 6, 1991, January 23, 1992, and the December 29, 1994 orders issued by the Public Service Commission of Kentucky in Administrative Case No. 232 Phase I, An Inquiry Into IntraLATA Toll Competition, An Appropriate Compensation Scheme for Completion of IntraLATA Calls by Interexchange Carriers, and WATS Jurisdictionality, this tariff complies with the Orders and Rule requirements and contains terms and conditions for access service provided by the issuing carriers of this tariff.

TARIFF BRANCH
RECEIVED
7/17/2006
PUBLIC SERVICE
COMMISSION
OF KENTUCKY

INTRASTATE ACCESS SERVICES TARIFF

2. General Regulations

2.1 Undertaking of the Telephone Company

2.1.1 Scope

(A) The Telephone Company does not undertake to transmit messages under this tariff.

(B) The Telephone Company shall be responsible only for the installation, operation and maintenance of the services it provides.

(C) The Telephone Company will, for maintenance purposes, test its services only to the extent necessary to detect and/or clear troubles.

(D) Services are provided 24 hours daily, seven days per week, except as set forth in other applicable sections of this tariff.

(E) The Telephone Company does not warrant that its facilities and services meet standards other than those set forth in this tariff.

2.1.2 Limitations

(A) Assignment or Transfer of Services

The customer may assign or transfer the use of services provided under this tariff only where there is no interruption of use or relocation of the services. Such assignment or transfer may be made to:

(1) another customer, whether an individual, partnership, association or corporation, provided the assignee or transferee assumes all outstanding indebtedness for such services, and the unexpired portion of the minimum period and the termination liability applicable to such services, if any; or

TARIFF BRANCH
RECEIVED
7/17/2006
PUBLIC SERVICE
COMMISSION
OF KENTUCKY

INTRASTATE ACCESS SERVICES TARIFF

2. General Regulations (Cont'd)

2.1 Undertaking of the Telephone Company (Cont'd)

2.1.2 Limitations (Cont'd)

(A) Assignment or Transfer of Services (Cont'd)

(2) a court-appointed receiver, trustee or other person acting pursuant to law in bankruptcy, receivership, reorganization, insolvency, liquidation or other similar proceedings, provided the assignee or transferee assumes the unexpired portion of the minimum period and the termination liability applicable to such services, if any.

In all cases of assignment or transfer, the written acknowledgment of the Telephone Company is required prior to such assignment or transfer. This acknowledgement shall be made within 15 days from the receipt of notification. All regulations and conditions contained in this tariff shall apply to such assignee or transferee.

The assignment or transfer of services does not relieve or discharge the assignor or transferor from remaining jointly or severally liable with the assignee or transferee for any obligations existing at the time of the assignment or transfer.

(B) **Use and Restoration of Services**

The use and restoration of services shall be in accordance with Part 64, Subpart D, Appendix A, of the Federal Communications Commission's Rules and Regulations, which specifies the priority system for such activities.

TARIFF BRANCH
RECEIVED
7/17/2006
PUBLIC SERVICE
COMMISSION
OF KENTUCKY

2. General Regulations (Cont'd)

2.1 Undertaking of the Telephone Company (Cont'd)

2.1.2 Limitations (Cont'd)

(C) Sequence of Provisioning (Cont'd)

Subject to compliance with the rules mentioned in (B) preceding, the services offered herein will be provided to customers on a first-come, first-served basis.

The first-come, first-served sequence shall be based upon the received time and date officially recorded, by stamp or other notation, by the Telephone Company on customer access orders. These orders must contain all the information as required for each respective service as delineated in other sections of this tariff. Customer orders shall not be deemed to have been received until such information is provided. Should questions arise which preclude order issuance due to missing information or the need for clarification, the Telephone Company will attempt to seek such missing information or clarification on a verbal basis.

2.1.3 Liability

(A) Limits of Liability

The Telephone Company's liability, if any, for its willful misconduct is not limited by this tariff. With respect to any other claim or suit, by a customer or by any others, for damages associated with the installation, provision, termination, maintenance, repair or restoration of service, and subject to the provisions of (B) through (G) following, the Telephone Company's liability if any, shall not exceed an amount equal to the proportionate charge for the service for the period during which the service was affected. This liability for damages shall be in addition to any amounts that may otherwise be due the customer under this tariff as a Credit Allowance for a Service Interruption.

TARIFF BRANCH
RECEIVED
7/17/2006
PUBLIC SERVICE
COMMISSION
OF KENTUCKY

INTRASTATE ACCESS SERVICES TARIFF

2. General Regulations (Cont'd)

2.1 Undertaking of the Telephone Company (Cont'd)

2.1.3 Liability (Cont'd)

(B) Acts or Omissions

The Telephone Company shall not be liable for any act or omission of any other carrier or customer providing a portion of a service, nor shall the Telephone Company for its own act or omission hold liable any other carrier or customer providing a portion of a service.

(C) Damages to Customer Premises

The Telephone Company is not liable for damages to the customer premises resulting from the furnishing of a service, including the installation and removal of equipment and associated wiring, unless the damage is caused by the Telephone Company's negligence.

(D) Indemnification of Telephone Company

(1) By the End User

The Telephone Company shall be indemnified, defended and held harmless by the end user against any claim, loss or damage arising from the end user's use of services offered under this tariff, involving:

(A) Claims for libel, slander, invasion of privacy, or infringement of copyright arising from the end user's own communications;

TARIFF BRANCH
RECEIVED
7/17/2006
PUBLIC SERVICE
COMMISSION
OF KENTUCKY

INTRASTATE ACCESS SERVICES TARIFF

2. General Regulations (Cont'd)

2.1 Undertaking of the Telephone Company (Cont'd)

2.1.3 Liability (Cont'd)

(D) Indemnification of Telephone Company (Cont'd)

(1) By the End User (Cont'd)

(B) Claims for patent infringement arising from the end user's acts combining or using the service furnished by the Telephone Company in connection with facilities or equipment furnished by the end users or customer or;

(C) All other claims arising out of any act or omission of the end user in the course of using services provided pursuant to this tariff.

(2) By the Customer

The Telephone Company shall be indemnified, defended and held harmless by the customer against any claim, loss or damage arising from the customer's use of services offered under this tariff, involving:

(A) Claims for libel, slander, invasion of privacy, or infringement of copyright arising from the customer's own communications;

(B) Claims for patent infringement arising from the customer's acts combining or using the service furnished by the Telephone Company in connection with facilities or equipment furnished by the end user or customer or;

(C) All other claims arising out of any act or omission of the customer in the course of using services provided pursuant to this tariff.

TARIFF BRANCH
RECEIVED
7/17/2006
PUBLIC SERVICE
COMMISSION
OF KENTUCKY

INTRASTATE ACCESS SERVICES TARIFF

2. General Regulations (Cont'd)

2.1 Undertaking of the Telephone Company (Cont'd)

2.1.3 Liability (Cont'd)

(E) Explosive Atmospheres

The Telephone Company does not guarantee or make any warranty with respect to its services when used in an explosive atmosphere. The Telephone Company shall be indemnified, defended and held harmless by the customer from any and all claims by any person relating to such customer's use of services so provided.

(F) No License Granted

No license under patents (other than the limited license to use) is granted by the Telephone Company or shall be implied or arise by estoppel, with respect to any service offered under this tariff. The Telephone Company will defend the customer against claims of patent infringement arising solely from the use by the customer of services offered under this tariff and will indemnify such customer for any damages awarded based solely on such claims.

(G) Circumstances Beyond the Telephone Company's Control

The Telephone Company's failure to provide or maintain services under this tariff shall be excused by labor difficulties, governmental orders, civil commotions, criminal actions taken against the Telephone Company, acts of God and other circumstances beyond the Telephone Company's reasonable control, subject to the Credit Allowance for a Service Interruption as set forth in 2.4.4 following.

TARIFF BRANCH
RECEIVED
7/17/2006
PUBLIC SERVICE
COMMISSION
OF KENTUCKY

INTRASTATE ACCESS SERVICES TARIFF

2. General Regulations (Cont'd)

2.1 Undertaking of the Telephone Company (Cont'd)

2.1.4 Provision of Services

The Telephone Company will provide to the customer, upon reasonable notice, services offered in other applicable sections of this tariff at rates and charges specified therein. Services will be made available to the extent that such services are or can be made available with reasonable effort, and after provision has been made for the Telephone Company's telephone exchange services.

2.1.5 Facility Terminations

The services provided under this tariff will include any entrance cable or drop wiring and wire or intrabuilding cable to that point where provision is made for termination of the Telephone Company's outside distribution network facilities at a suitable location inside a customer-designated premises. Such wiring or cable will be installed by the Telephone Company to the Point of Termination. Moves of the Point of Termination at the customer designated premises will be as set forth in 6.4.4 and 7.2.3 following.

2.1.6 Service Maintenance

The services provided under this tariff shall be maintained by the Telephone Company. The customer or others may not rearrange, move, disconnect, remove or attempt to repair any facilities provided by the Telephone Company, other than by connection or disconnection to any interface means used, except with the written consent of the Telephone Company.

TARIFF BRANCH
RECEIVED
7/17/2006
PUBLIC SERVICE
COMMISSION
OF KENTUCKY

INTRASTATE ACCESS SERVICES TARIFF

2. General Regulations (Cont'd)

2.1 Undertaking of the Telephone Company (Cont'd)

2.1.7 Changes and Substitutions

Except as provided for equipment and systems subject to FCC Part 68 Regulations at 47 C.F.R. Section 68.110(b), the Telephone Company may, where such action is reasonably required in the operation of its business, substitute, change or rearrange any facilities used in providing service under this tariff. Such actions may include, without limitation:

- substitution of different metallic facilities,
- substitution of carrier or derived facilities for metallic facilities used to provide other than metallic facilities
- substitution of metallic facilities for carrier or derived facilities used to provide other than metallic facilities,
- substitution of fiber or optical facilities,
- change of minimum protection criteria,
- change of operating or maintenance characteristics of facilities, or
- change of operations or procedures of the Telephone Company.

In case of any such substitution, change or rearrangement, the transmission parameters will be within the range as set forth in Section 15. following. The Telephone Company shall not be responsible if any such substitution, change or rearrangement renders any customer furnished services obsolete or requires modification or alteration thereof or otherwise affects their use or performance. If such substitution, change or rearrangement materially affects the operating characteristics of the facility, the Telephone Company will provide reasonable notification to the customer in writing. Reasonable time will be allowed for any redesign and implementation required by the change in operating characteristics. The Telephone Company will work cooperatively with the customer to determine reasonable notification procedures.

TARIFF BRANCH
RECEIVED
7/17/2006
PUBLIC SERVICE
COMMISSION
OF KENTUCKY

INTRASTATE ACCESS SERVICES TARIFF

2. General Regulations (Cont'd)

2.1 Undertaking of the Telephone Company (Cont'd)

2.1.8 Refusal and Discontinuance of Service

(A) If a customer fails to comply with 2.1.6 preceding (Service Maintenance) or 2.3.1, 2.3.4, 2.3.6, 2.3.11(D), 2.4 1 or 2.5 following (respectively, Damages, Availability for Testing, Balance, Jurisdictional Report and Certification Requirements, Payment Arrangements, Connection) including any customers failure to make payments on the date and times therein specified, the Telephone Company may, on (30) days written notice to the customer by Certified U.S. Mail, take the following actions:

- refuse additional applications for service and/or refuse to complete any pending orders for service, and/or

- discontinue the provision of service to the customer.

In the case of discontinuance all applicable charges, including termination charges, shall become due.

(B) If a customer fails to comply with 2.2.2 following (Unlawful and Abusive Use), the Telephone Company may, upon written request from a customer, or another exchange carrier, terminate service to any subscriber or customer identified as having utilized service provided under this tariff in the completion of abusive or unlawful telephone calls. Service shall be terminated by the Telephone Company as provided for in its general and/or local exchange service tariffs.

In such instances when termination occurs the Telephone Company shall be indemnified, defended and held harmless by any customer or Exchange Carrier requesting termination of service against any claim, loss or damage arising from the Telephone Company's actions in terminating such service, unless caused by the Telephone Company's negligence.

(C) Except as provided for equipment or systems subject to the FCC Part 68 Rules in 47 C.F.R. Section 68.108, if the customer fails to comply with 2.2.1 following (Interference or Impairment), the Telephone Company will, where practicable, notify the customer that temporary discontinuance of the use of a service may be required; however, where prior notice is not practicable, the Telephone Company may temporarily discontinue service forthwith if such action is reasonable in the circumstances. In case of such temporary discontinuance, the customer will be notified promptly and afforded the opportunity to correct the condition which gave rise to the temporary discontinuance. During such period of temporary discontinuance, credit allowance for service interruptions as set forth in 2.4.4 following is not applicable.

TARIFF BRANCH
RECEIVED
7/17/2006
PUBLIC SERVICE
COMMISSION
OF KENTUCKY

INTRASTATE ACCESS SERVICES TARIFF

2. General Regulations (Cont'd)

2.1 Undertaking of the Telephone Company (Cont'd)

2.1.8 Refusal and Discontinuance of Service (Cont'd)

(D) When access service is provided by more than one Telephone Company, the companies involved in providing the joint service may individually or collectively deny service to a customer for nonpayment. Where the Telephone Company(s) affected by the nonpayment is incapable of effecting discontinuance of service without cooperation from the other joint providers of Switched Access Service, such other Telephone Company(s) will, if technically feasible, assist in denying the joint service to the customer. Service denial for such joint service will only include calls originating or terminating within, or transiting, the operating territory of the Telephone Companies initiating the service denial for nonpayment. When more than one of the joint providers must deny service to effectuate termination for nonpayment, in cases where a conflict exists in the applicable tariff provisions, the tariff regulations of the end office Telephone Company shall apply for joint service discontinuance.

(E) If the Telephone Company does not refuse additional applications for service and/or does not discontinue the provision of the services as specified for herein, and the customer's noncompliance continues, nothing contained herein shall preclude the Telephone Company's right to refuse additional applications for service and/or to discontinue the provision of the services to the non-complying customer without further notice.

TARIFF BRANCH
RECEIVED
7/17/2006
PUBLIC SERVICE
COMMISSION
OF KENTUCKY

INTRASTATE ACCESS SERVICES TARIFF

2. General Regulations (Cont'd)

2.1 Undertaking of the Telephone Company (Cont'd)

2.1.9 Notification of Service-Affecting Activities

The Telephone Company will provide the customer reasonable notification of service-affecting activities that may occur in normal operation of its business. Such activities may include, but are not limited to the following:

- equipment or facilities additions,
- removals or rearrangements,
- routine preventative maintenance and
- major switching machine change-out.

Generally, such activities are not individual customer service specific, but may affect many customer services. No specific advance notification period is applicable to all service activities. The Telephone Company will work cooperatively with the customer to determine the reasonable notification requirements.

2.1.10 Coordination with Respect to Network Contingencies

The Telephone Company intends to work cooperatively with the customer to develop network contingency plans in order to maintain maximum network capability following natural or man-made disasters which affect telecommunications services.

2.1.11 Provision and Ownership of Telephone Numbers

The Telephone Company reserves the reasonable right to assign, designate or change telephone numbers, any other call number designations associated with Access Services, or the Telephone Company serving central office prefixes associated with such numbers, when necessary in the conduct of its business. Should it become necessary to make a change in such number(s), the Telephone Company will furnish to the customer 6 months notice, by Certified U.S. Mail, of the effective date and an explanation of the reason(s) for such change(s).

TARIFF BRANCH
RECEIVED
7/17/2006
PUBLIC SERVICE
COMMISSION
OF KENTUCKY

INTRASTATE ACCESS SERVICES TARIFF

2. General Regulations (Cont'd)

2.2 Use

2.2.1 Interference or Impairment

The characteristics and methods of operation of any circuits, facilities or equipment provided by other than the Telephone Company and associated with the facilities utilized to provide services under this tariff shall not:

- interfere with or impair service over any facilities of the Telephone Company, its affiliated companies, or its connecting and concurring carriers involved in its services,
- cause damage to their plant
- impair the privacy of any communications carried over their facilities, or
- create hazards to the employees of any of them or the public.

2.2.2 Unlawful and Abusive Use

(A) The service provided under this tariff shall not be used for an unlawful purpose or used in an abusive manner.

Abusive use includes:

(1) The use of the service of the Telephone Company for a call or calls, anonymous or otherwise, in a manner reasonably expected to frighten, abuse, torment, or harass another;

(2) The use of the service in such a manner as to interfere unreasonably with the use of the service by one or more other customers.

TARIFF BRANCH
RECEIVED
7/17/2006
PUBLIC SERVICE
COMMISSION
OF KENTUCKY

2. General Regulations (Cont'd)

2.3 Obligations of the Customer

2.3.1 Damages

The customer shall reimburse the Telephone Company for damages to Telephone Company facilities utilized to provide services under this tariff caused by the negligence or willful act of the customer or resulting from the customer's improper use of the Telephone Company facilities, or due to malfunction of any facilities or equipment provided by other than the Telephone Company. Nothing in the foregoing provision shall be interpreted to hold one customer liable for another customer's actions. The Telephone Company will, upon reimbursement for damages, cooperate with the customer in prosecuting a claim against the person causing such damage and the customer shall be subrogated to the right of recovery by the Telephone Company for the damages to the extent of such payment.

2.3.2 Ownership of Facilities and Theft

Facilities utilized by the Telephone Company to provide service under the provisions of this tariff shall remain the property of the Telephone Company. Such facilities shall be returned to the Telephone Company by the customer, whenever requested, within a reasonable period. The equipment shall be returned in as good condition as reasonable wear will permit.

2.3.3 Equipment Space and Power

The customer shall furnish or arrange to have furnished to the Telephone Company, at no charge, equipment space and electrical power required by the Telephone Company to provide services under this tariff at the points of termination of such services. The selection of ac or dc power shall be mutually agreed to by the customer and the Telephone Company. The customer shall also make necessary arrangements in order that the Telephone Company will have access to such spaces at reasonable times for installing, testing, repairing or removing Telephone Company facilities used to provide services.

2.3.4 Availability for Testing

Access to facilities used to provide services under this tariff shall be available to the Telephone Company at times mutually agreed upon in order to permit the Telephone Company to make tests and adjustments appropriate for maintaining the services in satisfactory operating condition. Such tests and adjustments shall be completed within a reasonable time. As set forth in 2.4.4(C)4 following no credit will be allowed for any interruptions involved during such tests and adjustments.

2.3.5 Limitation of Use of Metallic Facilities

Signals applied to a metallic facility shall conform to the limitations set forth in Technical Reference Publication AS No. 1. In the case of application of dc telegraph signaling systems, the customer shall be responsible, at its expense, for the provision of current limiting devices to protect the Telephone Company facilities from excessive current due to abnormal conditions and for the provision of noise mitigation networks when required to reduce excessive noise.

TARIFF BRANCH
RECEIVED
7/17/2006
PUBLIC SERVICE
COMMISSION
OF KENTUCKY

2. General Regulations (Cont'd)

2.3 Obligations of the Customer (Cont'd)

2.3.6 Balance

All signals for transmission over the facilities used to provide services under this tariff shall be delivered by the customer balanced to ground except for ground start, duplex (DX) and McCulloch-Loop (Alarm System) type signaling and dc telegraph transmission at speeds of 75 baud or less.

2.3.7 Design of Customer Services

Subject to the provisions of 2.1.7 preceding (Changes and Substitutions), the customer shall be solely responsible, at its own expense, for the overall design of its services and for any redesigning or rearrangement of its services which may be required because of changes in facilities, operations or procedures of the Telephone Company, minimum protection criteria or operating or maintenance characteristics of the facilities.

2.3.8 References to the Telephone Company

The customer may advise end users that certain services are provided by the Telephone Company in connection with the service the customer furnishes to end users; however, the customer shall not represent that the Telephone Company jointly participates in the customer's services.

2.3.9 Claims and Demands for Damages

(A) With respect to claims of patent infringement made by third persons, the customer shall defend, indemnify, protect and save harmless the Telephone Company from and against all claims arising out of the combining with, or use in connection with, the services provided under this tariff, any circuit, apparatus, system or method provided by the customer.

(B) The customer shall defend, indemnify and save harmless the Telephone Company from and against any suits, claims, losses or damages, including punitive damages, attorney fees and court costs by third persons arising out of the construction, installation, operation, maintenance, or removal of the customer's circuits, facilities, or equipment connected to the Telephone Company's services provided under this tariff including, without limitation, Workmen's Compensation claims, actions for infringement of copyright and/or unauthorized use of program material, libel and slander actions based on the content of communications transmitted over the customer's circuits, facilities or equipment, and proceedings to recover taxes, fines, or penalties for failure of the customer to obtain or maintain in effect any necessary certificates, permits, licenses, or other authority to acquire or operate the services provided under this tariff; provided, however, the foregoing indemnification shall not apply to suits, claims, and demands to recover damages for damage to property, death, or personal injury unless such suits, claims or demands are based on the tortuous conduct of the customer, its officers, agents or employees.

TARIFF BRANCH
RECEIVED
7/17/2006
PUBLIC SERVICE
COMMISSION
OF KENTUCKY

INTRASTATE ACCESS SERVICES TARIFF

2. General Regulations (Cont'd)

2.3 Obligations of the Customer (Cont'd)

2.3.9 Claims and Demands for Damages (Cont'd)

(C) The customer shall defend, indemnify and save harmless the Telephone Company from and against any suits, claims, losses or damages, including punitive damages, attorney fees and court costs by the customer or third parties arising out of any act or omission of the customer in the course of using services provided under this tariff.

2.3.10 Coordination with Respect to Network Contingencies

The customer shall, in cooperation with the Telephone Company, coordinate in planning the actions to be taken to maintain maximum network capability following natural or man-made disasters which affect telecommunications services.

2.3.11 Jurisdictional Report and Certification Requirements

(A) Certification Requirements - Special Access

When the customer orders Special Access Service and the customer certifies to the Telephone Company in writing that more than ten percent of the traffic is interstate, the service is considered to be interstate.

Following initial certification, should the jurisdictional nature of the customer's Special Access Service change, the customer inform the Telephone Company in writing of the change. The effective date of the change will be the date the Telephone Company receives the customer's notice of change. No charge applies for the jurisdictional change.

(B) Disputes Involving Jurisdictional Certification - Special Access

If a dispute arises concerning the certification of projected interstate traffic as described above, the Telephone Company will ask the customer to provide the data the customer used to determine that more than ten percent of the traffic is interstate. The customer shall supply the data within thirty (30) days of the Telephone Company request. If the reply results in a jurisdictional change of a Special Access Service, the effective date of the change will be the date the Telephone Company receives the customer's reply. There is no charge when the customer's reply results in a jurisdictional change in the Special Access services. No changes will be made to existing intrastate percentages until the requested detail has been provided to warrant such change.

TARIFF BRANCH
RECEIVED
7/17/2006
PUBLIC SERVICE
COMMISSION
OF KENTUCKY

2. General Regulations (Cont'd)

2.3 Obligations of the Customer (Cont'd)

2.3.11 Jurisdictional Report and Certification Requirements (Cont'd)

(C) Jurisdictional Reports - Switched Access

For Switched Access Service, the Telephone Company cannot in all cases determine the jurisdictional nature of customer traffic and its related access minutes. In such cases the customer may be called upon to provide a projected estimate of its traffic, split between the interstate and intrastate jurisdictions. The following regulations govern such estimates, their reporting by the customer and cases where the Telephone Company will develop jurisdictional percentages.

(1) General

When a customer initially orders Switched Access Service, the customer shall state in its order the Percent Interstate Usage (PIU), Percent Intrastate InterLATA Usage (PIIU) and Percent Local or Nonaccess Usage (PLU) on a state wide, LATA or billing account number level (at the option of the customer) on a local exchange company specific basis, separately for each of the following:

- Feature Group A (FGA)
- Feature Group B (FGB)
- Feature Group D (FGD)
- 500 Service Access
- 700 Service Access
- 800/888/877 Service Access
- 900 Service Access
- Switched Entrance Facilities
- Switched Direct Trunk Transport
- Switched Transport Multiplexing Equipment

The factor's provided for each of the foregoing facilities categories (Switched Entrance Facilities, Switched Direct Trunk Transport, and Switched Transport Multiplexing Equipment) shall reflect the combination of all traffic types which traverse such facility category.

Additionally, upon employing to 700 Service Access Code over Feature Group D Switched Access Services, the customer must provide the Company factors for the 700 calls. A PIU of less than one-hundred percent is not allowed in those LATA's where the service is not available as an intrastate access service. The customer shall report the factors on a statewide, LATA or billing account number level (at the option of the customer) on a local exchange company specific basis.

TARIFF BRANCH
RECEIVED
7/17/2006
PUBLIC SERVICE
COMMISSION
OF KENTUCKY

2. General Regulations (Cont'd)

2.3 Obligations of the Customer (Cont'd)

2.3.11 Jurisdictional Report Requirements (Cont'd)

(C) Jurisdictional Reports - Switched Access (Cont'd)

(1) General (Cont'd)

The customer shall furnish to the Company annually a report of factors on a statewide, LATA or billing account number level (at the option of the customer) on a local exchange company specific basis, separately for each of the services listed previously in 2.3.11 (C)(1). The customer, at its own option, may report revised factors more frequently if a change warrants an update before the annual period. These updates should be made to the Telephone Company on the first day of the next available quarter (January, July or October). The annual report of revised factors should be received by the first of March of each year. The revised factors will be implemented July 1, and will serve as the factors for the next twelve months billing. If the customer does not supply the report, the Telephone Company may assume the percentages to be the same as those provided in the last report. For those cases in which a report has never been received from the customer, the Telephone Company may assume the percentages to be the same as those provided in the order for service as set forth in (2) following.

When Special Access service is provided on a Switched Access Facility, e.g., Special Access DS1 on a Switched Access DS3, the facility will be apportioned between Switched Access and Special Access. The jurisdiction of the Special Access service shall reflect the composite of the jurisdiction of the lower capacity services, if any, of which it is comprised.

Pursuant to Federal Communications Commission Order FCC 85-145 released April 16, 1985, interstate usage is to be developed as though every call that enters a customer network at a point within the same state as that in which the called station (as designated by the called station number) is situated, is an intrastate communication and every call for which the point of entry is in a state other than that where the called station (as designated by the called number) is situated is an interstate communication.

TARIFF BRANCH
RECEIVED
7/17/2006
PUBLIC SERVICE
COMMISSION
OF KENTUCKY

2. General Regulations (Cont'd)

2.3 Obligations of the Customer (Cont'd)

2.3.11 Jurisdictional Report Requirements (Cont'd)

(C) Jurisdictional Reports - Switched Access (Cont'd)

(2) Feature Groups A and B

(a) When a customer orders Feature Group A and/or Feature Group B Switched Access Service the customer shall, in its order, state the projected factors for each Feature Group A and/or Feature Group B Switched Access Service group ordered. The term group shall be construed to mean single lines or trunks as well. If the customer adds or discontinues some but not all of the Feature Group A and/or Feature Group B Switched Access Services in a group, it shall provide revised factors for the overall services provided. The revised factors will serve as the basis for future billing and will be effective on the next bill date.

(b) For multiline hunt group or trunk group arrangements where either the interstate or the intrastate charges are based on measured usage, the factors for Feature Group A and/or Feature Group B Switched Access Service(s) information reported as set forth in (a) preceding will be used to determine the charges.

(3) Feature Groups C and D

When a customer orders Feature Group C or Feature Group D Switched Access Service(s) the customer may provide factors for each service in its order. Alternatively the Telephone company, where the jurisdiction can be determined from the call detail, will determine the jurisdiction for each service in its order.

The Telephone Company, where the jurisdiction can not be determined from the call detail, will determine the jurisdiction as follows:

- When originating call details are insufficient to determine the jurisdiction for the call (e.g. 800/888/877 Access Service), the customer must supply the factors.

TARIFF BRANCH
RECEIVED
7/17/2006
PUBLIC SERVICE
COMMISSION
OF KENTUCKY

INTRASTATE ACCESS SERVICES TARIFF

2. General Regulations (Cont'd)

2.3 Obligations of the Customer (Cont'd)

2.3.11 Jurisdictional Report Requirements (Cont'd)

(C) Jurisdictional Reports - Switched Access (Cont'd)

(3) Feature Groups C and D (Cont'd)

- For terminating access minutes, the customer may supply the factors or the customer may allow the originating access minute usage to be used to develop the factors for such terminating access minutes. Customers choosing not to supply factors for terminating Feature Group C or D Switched Access service may continue to allow the Company to develop factors based upon the percentage for originating access minutes. These percentages shall be used by the Company as the factors for such call detail.

- For Switched Entrance Facilities, Switched Direct Trunk Transport, Switched Transport Multiplexing and CIP the customer must utilize total usage traversing the specific facilities to develop the projected factors for such dedicated switched transport service.

(D) Billing Disputes Involving Jurisdictional Reports -Switched Access

For Switched Access, if a billing dispute arises or the Kentucky Public Service Commission questions the projected intrastate and/or intraLATA percentages, the Telephone Company will ask the customer to provide the data the customer used to determine the projected intrastate and intraLATA percentages. The customer shall supply the data within thirty (30) days of the Telephone Company request. The customer shall keep, for a minimum of 12 months, records of call detail from which the percentages of intrastate and intraLATA use can be ascertained and upon request of the Telephone Company make the records available for inspection as reasonably necessary for purposes of verification of the percentages. At a minimum for annual PIU revisions, the information used by the Customer to support the revised PIU must reflect usage (either actual or a representative sample) for each quarter of the prior calendar year. No change will be made to existing PIU's until the detail has been provided to warrant such change. If the Customer refuses to provide supporting information, a default PIU of 50% will be used.

TARIFF BRANCH
RECEIVED
7/17/2006
PUBLIC SERVICE
COMMISSION
OF KENTUCKY

INTRASTATE ACCESS SERVICES TARIFF

2. General Regulations (Cont'd)

2.3 Obligations of the Customer (Cont'd)

2.3.12 Determination of Intrastate Charges for Mixed Interstate and Intrastate Switched Access Service

When mixed interstate and intrastate Switched Access Service is provided, all charges (i.e., nonrecurring, monthly and/or usage) including optional features charges, will be prorated between interstate and intrastate. The percentage determined as set forth in 2.3.11 (C) preceding will serve as the basis for prorating the charges unless the Telephone Company is billing according to actuals by jurisdiction. The percentage of an Access Service to be charged as intrastate is applied in the following manner:

(A) Monthly and Nonrecurring Charges

For monthly and nonrecurring chargeable rate elements, multiply the percent intrastate use times the quantity of chargeable elements times the stated tariff rate per element.

(B) Usage Sensitive Charges

For usage sensitive (i.e., access minutes and calls) chargeable rate elements, multiply the percent intrastate use times actual use (i.e., measured or Telephone Company assumed average use) times the stated tariff rate.

The intrastate percentage may change as revised usage reports are submitted as set forth in 2.3.11 preceding.

TARIFF BRANCH
RECEIVED
7/17/2006
PUBLIC SERVICE
COMMISSION
OF KENTUCKY

INTRASTATE ACCESS SERVICES TARIFF

2. General Regulations (Cont'd)

2.3 Obligations of the Customer (Cont'd)

2.3.13 Determination of IntraLATA Charges for Mixed InterLATA and IntraLATA Switched Access Service

When mixed interLATA and intraLATA Switched Access Service is provided, all charges (i.e., nonrecurring, monthly, and usage) including optional feature charges, will be prorated between interLATA and intraLATA in the same manner as described in 2.3.11 preceding.

2.4 Payment Arrangements and Credit Allowances

2.4.1 Payment of Rates, Charges and Deposits

(A) Deposits

The Telephone Company will only require a customer which has a proven history of late payments to the Telephone Company or does not have established credit, to make a deposit prior to or at any time after the provision of a service to the customer. No such deposit will be required of a customer which is a successor of a company which has established credit and has no history of late payments to the Telephone Company. Such deposit will not exceed the actual or estimated rates and charges for the service for a two month period. The fact that a deposit has been made in no way relieves the customer from complying with the Telephone Company's regulations as to the prompt payment of bills. At such time as the provision of the service to the customer is terminated, the amount of the deposit will be credited to the customer's account and any credit balance which may remain will be refunded.

Such a deposit will be refunded or credited to the account when the customer has established credit or, in any event, after the customer has established a one-year prompt payment record at any time prior to the termination of the provision of the service to the customer. In case of a cash deposit, for the period the deposit is held by the Telephone Company, the customer will receive interest at the same percentage rate as that set forth in (C)(2)(a) or in (C)(2)(b) following, whichever is lower.

TARIFF BRANCH
RECEIVED
7/17/2006
PUBLIC SERVICE
COMMISSION
OF KENTUCKY

INTRASTATE ACCESS SERVICES TARIFF

2. General Regulations (Cont'd)

2.4 Payment Arrangements and Credit Allowances (Cont'd)

2.4.1 Payment of Rates, Charges and Deposits (Cont'd)

(A) Deposits (Cont'd)

The rate will be compounded daily for the number of days from the date the customer deposit is received by the Telephone Company to and including the date such deposit is credited to the customer's account or the date the deposit is refunded by the Telephone Company. Should a deposit be credited to the customer's account, as indicated above, no interest will accrue on the deposit from the date such deposit is credited to the customer's account.

(B) Bill Dates

The Telephone Company shall bill on a current basis all charges incurred by and credits due to the customer under this tariff attributable to services established or discontinued during the preceding billing period. In addition, the Telephone Company shall bill in advance charges for all services to be provided during the ensuing billing period except for charges associated with service usage and for the Federal Government which will be billed in arrears. The bill day (i.e., the billing date of a bill for a customer for Access Service under this tariff), the period of service each bill covers and the payment date will be as follows:

(1) End User Access Service and Presubscription

For End User Access Service and Presubscription Service, the Telephone Company will establish a bill day each month for each end user account or advise the customer in writing of an alternate billing schedule. Alternate billing schedules shall not be established on less than 60 days notice or initiated by the Telephone Company more than twice in any consecutive 12 month period. The bill will cover End User Access Service charges for the ensuing billing period except for End User Access Service for the Federal Government which will be billed in arrears. Any applicable Presubscription Charges, any known unbilled charges for prior periods and any known unbilled adjustments for prior periods for End User Access Service and Presubscription Service will be applied to this bill. Such bills are due when rendered.

TARIFF BRANCH
RECEIVED
7/17/2006
PUBLIC SERVICE
COMMISSION
OF KENTUCKY

2. General Regulations (Cont'd)

2.4 Payment Arrangements and Credit Allowances (Cont'd)

2.4.1 Payment of Rates, Charges and Deposits (Cont'd)

(B) Bill Dates (Cont'd)

(2) Access Services Other than End User and Presubscription

For Service other than End User Access Service and Presubscription Service, the Telephone Company will establish a bill day each month for each customer account or advise the customer in writing of an alternate billing schedule. Alternate billing schedules shall not be established on less than 60 days notice or initiated by the Telephone Company more than twice in any consecutive 12 month period.

The bill will cover nonusage sensitive service charges for the ensuing billing period for which the bill is rendered, any known unbilled nonusage sensitive charges for prior periods and unbilled usage charges for the period after the last bill day through the current bill day. Any known unbilled usage charges for prior periods and any known unbilled adjustments will be applied to this bill. Payment for such bills is due in immediately available funds by the payment date, as set forth in (C) following. If payment is not received by the payment date, a late payment penalty will apply as set forth in (C) following.

TARIFF BRANCH
RECEIVED
7/17/2006
PUBLIC SERVICE
COMMISSION
OF KENTUCKY

INTRASTATE ACCESS SERVICES TARIFF

2. General Regulations (Cont'd)

2.4 Payment Arrangements and Credit Allowances (Cont'd)

2.4.1 Payment of Rates, Charges and Deposits (Cont'd)

(C) Payment Dates and Late Payment Penalties

(1) All bills dated as set forth in (B)(2) preceding for service, other than End User Service and Presubscription Service, provided to the customer by the Telephone Company are due 31 days (payment date) after the bill day or by the next bill date (i.e., same date in the following month as the bill date), whichever is the shortest interval, except as provided herein, and are payable in immediately available funds. If the customer does not receive a bill at least 20 days prior to the 31 day payment due date, then the bill shall be considered delayed. When the bill has been delayed, upon request of the customer the due date will be extended by the number of days the bill was delayed. Such request of the customer must be accompanied with proof of late bill receipt.

If such payment date would cause payment to be due on a Saturday, Sunday or Legal Holiday, payment for such bills will be due from the customer as follows:

If the payment date falls on a Sunday or on a Legal Holiday which is observed on a Monday, the payment date shall be the first non-Holiday day following such Sunday or Legal Holiday.

If the payment date falls on a Saturday or on a Legal Holiday which is observed on Tuesday, Wednesday, Thursday or Friday, the payment date shall be the last non-Holiday day preceding such Saturday or Legal Holiday.

TARIFF BRANCH
RECEIVED
7/17/2006
PUBLIC SERVICE
COMMISSION
OF KENTUCKY

INTRASTATE ACCESS SERVICES TARIFF

2. General Regulations (Cont'd)

2.4 Payment Arrangements and Credit Allowances (Cont'd)

2.4.1 Payment of Rates, Charges and Deposits (Cont'd)

(C) Payment Dates and Late Payment Penalties (Cont'd)

(2) Further, if no payment is received by the payment date or if a payment or any portion of a payment is received by the Telephone Company after the payment date as set forth in (1) preceding, or if a payment or any portion of a payment is received by the Telephone Company in funds which are not immediately available to the Telephone Company, then a late payment penalty shall be due to the Telephone Company. The late payment penalty shall be the payment or the portion of the payment not received by the payment date times a late factor. The late factor shall be the lesser of:

(a) the highest interest rate (in decimal value) which may be levied by law for commercial transactions, compounded daily for the number of days from the payment date to and including the date that the customer actually makes the payment to the Telephone Company, or

(b) 0.000590 per day, compounded daily for the number of days from the payment date to and including the date that the customer actually makes the payment to the Telephone Company.

TARIFF BRANCH
RECEIVED
7/17/2006
PUBLIC SERVICE
COMMISSION
OF KENTUCKY

2. General Regulations (Cont'd)

2.4 Payment Arrangements and Credit Allowances (Cont'd)

2.4.1 Payment of Rates, Charges and Deposits (Cont'd)

(D) Valid Billing Dispute

A valid billing dispute consists of written documentation specifically listing the total dollar amount of the dispute, specific rate elements being disputed and their dollar amounts. The dispute must be received in writing within 30 days after the due date of the bill. At least one of the seven following reasons must be given for the dispute to be considered valid.

1. Incorrect rate
2. Error in quantity (i.e., minutes or quantity of circuits incorrect.)
3. Service no longer exists.
4. Invalid factors
5. Incorrect customer being billed.
6. Invalid Purchase Order Number (PON)
7. Backbilling

Refusal to pay an entire bill or any portion thereof without written supporting documentation, will not be considered a valid dispute and will be handled as a non payment in accordance with Section 2.4.1(C) above.

(E) Billing Disputes Resolved in Favor of the Telephone Company

Late payment charges will apply to amounts withheld pending settlement of the dispute. Late payment charges are calculated as set forth in (C)(2) preceding except that when the customer disputes the bill on or before the payment date and pays the undisputed amount on or before the payment date, the penalty interest period shall not begin until 10 days following the payment date.

TARIFF BRANCH
RECEIVED
7/17/2006
PUBLIC SERVICE
COMMISSION
OF KENTUCKY

INTRASTATE ACCESS SERVICES TARIFF

2. General Regulations (Cont'd)

2.4 Payment Arrangements and Credit Allowances (Cont'd)

2.4.1 Payment of Rates, Charges and Deposits (Cont'd)

(F) Billing Disputes Resolved in Favor of the Customer

If the customer pays the total billed amount and disputes all or part of the amount, the Telephone Company will refund the overpayment. In addition, the Telephone Company will pay to the customer penalty interest on the overpayment. When a claim is filed within 90 days of the due date, the penalty interest period shall begin on the payment date. When a claim is filed more than 90 days after the due date, the penalty interest period shall begin from the date of the claim or the date of overpayment, whichever is later.

The penalty interest period shall end on the date that the Telephone Company actually refunds the overpayment to the customer. The penalty interest rate shall be the lesser of:

(1) the highest interest rate (in decimal value) which may be levied by law for commercial transactions, compounded daily for the number of days from the first date to and including the last date of the period involved, or

(2) 0.000292 per day, compounded daily for the number of days from the first date to and including the last date of the period involved.

(G) Proration of Charges

Adjustments for the quantities of services established or discontinued in any billing period beyond the minimum period set forth for services in other sections of this tariff will be prorated to the number of days based on a 30 day month. The Telephone Company will, upon request, furnish within 30 days of a request and at no charge to the customer such detailed information as may reasonably be required for verification of any bill.

(H) Rounding of Charges

When a rate as set forth in this tariff is shown to more than two decimal places, the charges will be determined using the rate shown. The resulting amount will then be rounded to the nearest penny (i.e., rounded to two decimal places).

TARIFF BRANCH
RECEIVED
7/17/2006
PUBLIC SERVICE
COMMISSION
OF KENTUCKY

INTRASTATE ACCESS SERVICES TARIFF

2. General Regulations (Cont'd)

2.4 Payment Arrangements and Credit Allowances (Cont'd)

2.4.2 Minimum Periods

The minimum period for which services are provided and for which rates and charges are applicable is one month except for those usage rated services set forth in Section 6. (Switched Access Service) and those services set forth in 6.1.3 (Switched Access High Capacity DS3 Entrance Facility and High Capacity DS3 Direct Trunked Transport), 7.2.4, (Part-time Video and Program Audio), and 7.2.8 (High Capacity DS1 and DS3 Service), or as otherwise specified.

The minimum period for which service is provided and for which rates and charges are applicable for a Specialized Service or Arrangement provided on an individual case basis as set forth in Section 12. following, is one month unless a different minimum period is established with the individual case filing.

When a service is discontinued prior to the expiration of the minimum period, charges are applicable, whether the service is used or not, as follows:

(A) When a service with a one month minimum period is discontinued prior to the expiration of the minimum period, a one month charge will apply at the rate level in effect at the time service is discontinued.

(B) When a service with a minimum period greater than one month is discontinued prior to the expiration of the minimum period, except for DS3 monthly service and DS1 and DS3 Service Optional Rate Plans as provided for in Sec. 5.5.1 and 7.2.8 following, the applicable charge will be the lesser of (1) the Telephone Company's total nonrecoverable costs less the net salvage value for the discontinued service or (2) the total monthly charges, at the rate level in effect at the time service is discontinued, for the remainder of the minimum period.

TARIFF BRANCH
RECEIVED
7/17/2006
PUBLIC SERVICE
COMMISSION
OF KENTUCKY

INTRASTATE ACCESS SERVICES TARIFF

2. General Regulations (Cont'd)

2.4 Payment Arrangements and Credit Allowances (Cont'd)

2.4.3 Cancellation of an Order for Service

Provisions for the cancellation of an order for service are set forth in other applicable sections of this tariff.

2.4.4 Credit Allowance for Service Interruptions

(A) General

A service is interrupted when it becomes unusable to the customer because of a failure of a facility component used to furnish service under this tariff or in the event that the protective controls applied by the Telephone Company result in the complete loss of service by the customer as set forth in 6.2.1 following. An interruption period starts when an inoperative service is reported to the Telephone Company, and ends when the service is operative.

(B) When a Credit Allowance Applies

In case of an interruption to any service, allowance for the period of interruption, if not due to the negligence of the customer, shall be provided.

For Digital Data Access, SD Codes D1 through D4 and High Capacity, HC1, Special Access Services, any period during which the error performance is below that specified for the service will be considered as an interruption.

Service interruptions for Specialized Service or Arrangements provided under Section 12. following shall be administered in the same manner as those set forth in this section (2.4.4) unless other regulations are specified with the individual case filing.

TARIFF BRANCH
RECEIVED
7/17/2006
PUBLIC SERVICE
COMMISSION
OF KENTUCKY

INTRASTATE ACCESS SERVICES TARIFF

2. General Regulations (Cont'd)

2.4 Payment Arrangements and Credit Allowances (Cont'd)

2.4.4 Credit Allowance for Service Interruptions (Cont'd)

(B) When a Credit Allowance Applies (Cont'd)

Credit allowances are computed as follows:

(1) Special Access Service other than Program Audio and Video and flat rated Switched Access Service rate elements

For Special Access Services other than Program Audio and Video Services and for flat rated Switched Access Service rate elements (i.e., Entrance Facility, Direct Trunked Transport and Multiplexing), no credit shall be allowed for an interruption of less than 30 minutes. The customer shall be credited for an interruption of 30 minutes or more at the rate of 1/1440 of the monthly charges for the facility or service for each period of 30 minutes or major fraction thereof that the interruption continues.

The monthly charges used to determine the credit shall be as follows:

(a) Two-point Services

For two-point services, the monthly charge shall be the total of all the monthly rate element charges associated with the service (i.e., two channel terminations, channel mileage and optional features and functions).

(b) Multipoint Services

For multipoint services, the monthly charge shall be only the total of all the monthly rate element charges associated with that portion of the service that is inoperative (i.e., a channel termination per customer premises, channel mileage and optional features and functions).

TARIFF BRANCH
RECEIVED
7/17/2006
PUBLIC SERVICE
COMMISSION
OF KENTUCKY

INTRASTATE ACCESS SERVICES TARIFF

2. General Regulations (Cont'd)

2.4 Payment Arrangements and Credit Allowances (Cont'd)

2.4.4 Credit Allowance for Service Interruptions (Cont'd)

(B) When a Credit Allowance Applies (Cont'd)

(1) Special Access Service other than Program Audio and Video and flat rated Switched Access Service rate elements, (Cont'd)

(c) Multiplexed Services

For multiplexed services, the monthly charge shall be the total of all the monthly rate element charges associated with that portion of the service that is inoperative. When the facility which is multiplexed or the multiplexer itself is inoperative, the monthly charge shall be the total of all the monthly rate element charges associated with the service (i.e., the channel termination, channel mileage, Entrance Facility, Direct Trunked Transport, and optional features and functions, including the multiplexer on the facility to the hub, and the channel terminations, channel mileages and optional features and functions on the individual services from the hub). When the service which rides a channel of the multiplexed facility is inoperative, the monthly charge shall be the total of all the monthly rate element charges associated with that portion of the service from the hub to a customer premises (i.e., channel termination, channel mileage, Direct Trunked Transport, and optional features and functions).

(d) Flat rated Switched Access rate elements

For flat rated Switched Access Service rate elements, the monthly charge shall be the total of all the monthly rate element charges associated with the service (i.e., Entrance Facility, Direct Trunked Transport and Multiplexing).

TARIFF BRANCH
RECEIVED
7/17/2006
PUBLIC SERVICE
COMMISSION
OF KENTUCKY

INTRASTATE ACCESS SERVICES TARIFF

2. General Regulations (Cont'd)

2.4 Payment Arrangements and Credit Allowances (Cont'd)

2.4.4 Credit Allowance for Service Interruptions (Cont'd)

(B) When a Credit Allowance Applies (Cont'd)

(2) Program Audio and Video Special Access Services

For Program Audio and Video Special Access Services, no credit shall be allowed for an interruption of less than 30 seconds. The customer shall be credited for an interruption of 30 seconds or more as follows:

(a) For two-point services, when monthly rates are applicable, the credit shall be at the rate of 1/8640 of the monthly charges for the service for each period of 5 minutes or major fraction thereof that the interruption continues.

(b) For two-point services, when daily rates are applicable, the credit shall be at the rate of 1/288 of the daily charges for the service for each period of 5 minutes or major fraction thereof that the interruption continues.

(c) For multipoint services, when monthly rates are applicable, the credit shall be at the rate of 1/8640 of the monthly charges for each channel termination, channel mileage and optional features and functions that are inoperative for each period of 5 minutes or major fraction thereof that the interruption continues.

TARIFF BRANCH
RECEIVED
7/17/2006
PUBLIC SERVICE
COMMISSION
OF KENTUCKY

INTRASTATE ACCESS SERVICES TARIFF

2. General Regulations (Cont'd)

2.4 Payment Arrangements and Credit Allowances (Cont'd)

2.4.4 Credit Allowance for Service Interruptions (Cont'd)

(B) When a Credit Allowance Applies (Cont'd)

(2) Program Audio and Video Special Access Services (Cont'd)

(d) For multipoint services, when daily rates are applicable, the credit shall be at the daily rate of 1/288 of the daily charges for channel termination, channel mileage and optional features and functions that are inoperative for each period of 5 minutes or major fraction thereof that the interruption continues.

(e) For multipoint services, the credit for the monthly or daily charges includes the charges for the distribution amplifier only when the distribution amplifier is inoperative.

(f) When two or more interruptions occur during a period of 5 consecutive minutes, such multiple interruptions shall be considered as one interruption.

(3) Switched Access Service Usage Rated Elements

For Switched Access Service usage rated elements, no credit shall be allowed for an interruption of less than 24 hours. The customer shall be credited for an interruption of 24 hours or more at the rate of 1/30 of any applicable monthly rate or assumed minutes of use charge for each period of 24 hours or major fraction thereof that the interruption continues.

(4) Credit Allowances Cannot Exceed Monthly Rate

The credit allowance(s) for an interruption or for a series of interruptions shall not exceed any monthly rate for the service interrupted in any one monthly billing period.

(C) When a Credit Allowance Does Not Apply

No credit allowance will be made for:

(1) Interruptions caused by the negligence of the customer.

(2) Interruptions of a service due to the failure of equipment or systems provided by the customer or others.

TARIFF BRANCH
RECEIVED
7/17/2006
PUBLIC SERVICE
COMMISSION
OF KENTUCKY

INTRASTATE ACCESS SERVICES TARIFF

2. General Regulations (Cont'd)

2.4 Payment Arrangements and Credit Allowances (Cont'd)

2.4.4 Credit Allowance for Service Interruptions (Cont'd)

(C) When a Credit Allowance Does Not Apply (Cont'd)

(3) Interruptions of a service during any period in which the Telephone Company is not afforded access to the premises where the service is terminated.

(4) Interruptions of a service when the customer has released that service to the Telephone Company for maintenance purposes, to make rearrangements, or for the implementation of an order for a change in the service during the time that was negotiated with the customer prior to the release of that service. Thereafter, a credit allowance as set forth in (B) preceding applies.

(5) Interruptions of a service which continue because of the failure of the customer to authorize replacement of any element of special construction, as set forth in NATIONAL EXCHANGE CARRIER ASSOCIATION TARIFF F.C.C. NO. 3 for SPECIAL CONSTRUCTION. The period for which no credit allowance is made begins on the seventh day after the customer receives the Telephone Company's written notification of the need for such replacement and ends on the day after receipt by the Telephone Company of the customer's written authorization for such replacement.

(6) Periods when the customer elects not to release the service for testing and/or repair and continues to use it on an impaired basis.

(7) An interruption or a group of interruptions, resulting from a common cause, that would result in credit in an amount less than one dollar.

(D) Use of an Alternative Service Provided by the Telephone Company

Should the customer elect to use an alternative service provided by the Telephone Company during the period that a service is interrupted, the customer must pay the tariffed rates and charges for the alternative service used.

(E) Temporary Surrender of a Service

In certain instances, the customer may be requested by the Telephone Company to surrender a service for purposes other than maintenance, testing or activity relating to a service order. If the customer consents, a credit allowance will be granted. The credit allowance will be 1/1440 of the monthly rate for each period of 30 minutes or fraction thereof that the service is surrendered. In no case will the credit allowance exceed the monthly rate for the service surrendered in any one monthly billing period.

TARIFF BRANCH
RECEIVED
7/17/2006
PUBLIC SERVICE
COMMISSION
OF KENTUCKY

INTRASTATE ACCESS SERVICES TARIFF

2. General Regulations (Cont'd)

2.4 Payment Arrangements and Credit Allowances (Cont'd)

2.4.5 Re-establishment of Service Following Fire, Flood or Other Occurrence

(A) Nonrecurring Charges Do Not Apply

Charges do not apply for the re-establishment of service following a fire, flood or other occurrence attributed to an Act of God provided that:

(1) The service is of the same type as was provided prior to the fire, flood or other occurrence.

(2) The service is for the same customer.

(3) The service is at the same location on the same premises.

(4) The re-establishment of service begins within 60 days after Telephone Company service is available. (The 60 day period may be extended a reasonable period if the renovation of the original location on the premises affected is not practical within the allotted time period).

(B) Nonrecurring Charges Apply

Nonrecurring Charges apply for establishing service at a different location on the same premises or at a different premises pending re-establishment of service at the original location.

TARIFF BRANCH
RECEIVED
7/17/2006
PUBLIC SERVICE
COMMISSION
OF KENTUCKY

INTRASTATE ACCESS SERVICES TARIFF

2. General Regulations (Cont'd)

2.4 Payment Arrangements and Credit Allowances (Cont'd)

2.4.6 Title or Ownership Rights

The payment of rates and charges by customers for the services offered under the provisions of this tariff does not assign, confer or transfer title or ownership rights to proposals or facilities developed or utilized, respectively, by the Telephone Company in the provision of such services.

2.4.7 Access Services Provided By More Than One Telephone Company

When an Access Service is provided by more than one Telephone Company, the Telephone Companies involved will mutually agree upon one of the billing methods as set forth in (B)(1) and (2) following based on the service being provided. The Telephone Company will notify the customer in writing of the billing method being used. The customer will place the order for the service as set forth in 5.3 following dependent upon the billing method.

(A) Non Meet Point Billing/Feature Group A

Non Meet Point Billing under a Revenue Sharing Agreement is the generally accepted billing method for Feature Group A Switched Access Service. At the agreement of the participating Telephone Companies, Meet Point Billing may apply to jointly provided Feature Group A services as set forth in (B) following.

(1) Single Company Billing/Revenue Sharing

All Telephone Companies jointly providing Feature Group A service will receive an order or a copy of the order, from the customer, as specified in 5.3.1(A) following. The telephone company that provides the dial tone will arrange to provide the service, determine the applicable charges and bill the customer for the entire service in accordance with its Access Services tariff as provided for under a Feature Group A Revenue Sharing Agreement.

TARIFF BRANCH
RECEIVED
7/17/2006
PUBLIC SERVICE
COMMISSION
OF KENTUCKY

2. General Regulations (Cont'd)

2.4 Payment Arrangements and Credit Allowances (Cont'd)

2.4.7 Access Services Provided By More Than One Telephone Company (Cont'd)

(B) Meet Point Billing

Meet Point Billing is required when an access service is provided by multiple Telephone Companies for Feature Group B, C, and D Switched Access Services, Directory Assistance and Special Access. It is optional for Feature Group A Switched Access Service.

Each Telephone Company jointly providing the access service will receive an order or copy of the order from the customer as specified in 5.3.2 following and arrange to provide the service.

For usage rated access services the access minutes of use will generally be determined by the recording company. Where the recording company is not the Bill Rendering Company, the recording company will provide detailed usage records to the Bill Rendering Company to develop the access minutes.

The Bill Rendering Company in a single bill arrangement for Feature Groups B, C, and D Switched Access Services, is normally the end user's end office, for WATS usage the Bill Rendering Company is normally the WATS Serving Office, for Directory Assistance, the Bill Rendering Company is normally the Directory Assistance Location. The name of the Bill Rendering Company will be included in the meet point billing notification provided to the customer by all the telephone companies on all meet point billed services.

The non Bill Rendering Company(s) is any Telephone Company(s) in whose territory a segment of the Local Transport or Channel Mileage is provided and/or where the customer's Point of Termination is located.

There are two Meet Point Billing Options, Single Bill and Multiple Bill. These billing options are explained in (1) and (2) following. The Single Bill option is the preferred method. However, when a single bill option can not be agreed to by all telephone companies providing service, the multiple bill option is the default.

TARIFF BRANCH
RECEIVED
7/17/2006
PUBLIC SERVICE
COMMISSION
OF KENTUCKY

2. General Regulations (Cont'd)

2.4 Payment Arrangements and Credit Allowances (Cont'd)

2.4.7 Access Services Provided By More Than One Telephone Company (Cont'd)

(B) Meet Point Billing (Cont'd)

Each telephone company must provide meet point billing notification to the customer, in writing, when new service is ordered or thirty days prior to changing an existing meet point arrangement. The notification should include the following:

- The Meet Point Billing Option that will be used,
- The Telephone Company(s) that will render the bill(s),
- The Telephone Company(s) to whom payment(s) should be remitted, and
- The Telephone Company(s) that will provide the bill inquiry function.

A Telephone Company that renders a meet point bill, the Bill Rendering Company, will render the bill in accordance with the industry standards as described in the Multiple Exchange Carrier Access Billing (MECAB) Guidelines and the Multiple Exchange Carrier Ordering and Design (MECOD) Guidelines. The bill will include cross reference(s) to the other telephone Company(s) providing service and common circuit identifiers. Should a billing dispute arise, the terms and conditions of the Bill Rendering company will apply.

(1) Single Bill Option

The single bill option allows the customer to receive one bill for access services that are provided by more than one company. The single bill option provides the following three billing alternatives:

- Single Bill/Multiple Tariff
- Single Bill/Pass Through Billing, and
- Single Bill/Single Tariff

These options are described following in (a), (b) and (c) respectively.

TARIFF BRANCH
RECEIVED
7/17/2006
PUBLIC SERVICE
COMMISSION
OF KENTUCKY

2. General Regulations (Cont'd)

2.4 Payment Arrangements and Credit Allowances (Cont'd)

2.4.7 Access Services Provided By More Than One Telephone Company (Cont'd)

(B) Meet Point Billing (Cont'd)

(1) Single Bill Option (Cont'd)

(a) Single Bill/Multiple Tariff

The single bill/multiple tariff bill is prepared by the Bill Rendering Company but reflects all rates and charges for each connecting company's part of the service based on each company's access tariff.

The Bill Rendering Company will:

- determine and include all recurring and nonrecurring rates and charges for each involved Telephone Company;
- identify each involved Telephone Company's rates and charges separately on the bill;
- forward the bill to the customer and provide a copy of the bill or other substantiation of the charges to the connecting Telephone Companies; and
- advise the customer how to remit the payment, either directly to each Telephone Company involved in the provision of this meet point billed service, or, as a single payment made to the Bill Rendering Company. If payments are to be sent directly to the Bill Rendering Company, the non Bill Rendering Company(s) will provide the customer with written authorization for the payment arrangement.

TARIFF BRANCH
RECEIVED
7/17/2006
PUBLIC SERVICE
COMMISSION
OF KENTUCKY

2. General Regulations (Cont'd)

2.4 Payment Arrangements and Credit Allowances (Cont'd)

2.4.7 Access Services Provided By More Than One Telephone Company (Cont'd)

(B) Meet Point Billing (Cont'd)

(1) Single Bill Option (Cont'd)

(b) Single Bill/Pass-Through Billing

The single bill/pass-through bill is compiled by the Bill Rendering Company. Each Telephone Company will prepare a bill for its portion of the access service and forward it to the Bill Rendering Company. Normally, these connecting telephone company bills are forwarded to the Bill Rendering Company without usage to eliminate possible delays.

Each non Bill Rendering Company will:

- prepare its own bill;
- determine its rates and charges for Local Transport, Directory Transport and/or Channel Mileage as set forth in (3) following;
- determine and include all applicable recurring and nonrecurring rates and charges of its access tariff; and
- forward the bill to the Bill Rendering Company for the meet point access service.

The Bill Rendering Company will:

- apply usage data, when needed, to the bills and calculate the charges;
- combine all the bills of the involved Telephone Companies providing the meet point access service;
- forward the bill to the customer; and
- advise the customer how to remit the payment, either directly to each Telephone Company involved in the provision of this meet point billed service; or, as a single payment made to the Bill Rendering Company. If payments are to be sent directly to the Bill Rendering Company, the non Bill Rendering Company(s) will provide the customer with written authorization for the payment arrangement.

TARIFF BRANCH
RECEIVED
7/17/2006
PUBLIC SERVICE
COMMISSION
OF KENTUCKY

INTRASTATE ACCESS SERVICES TARIFF

2. General Regulations (Cont'd)

2.4 Payment Arrangements and Credit Allowances (Cont'd)

2.4.7 Access Services Provided By More Than One Telephone Company (Cont'd)

(B) Meet Point Billing (Cont'd)

(1) Single Bill Option (Cont'd)

(c) Single Bill/Single Tariff

The single bill/single tariff bill provides a meet point bill that is billed completely at the Billing Rendering Company's tariff rates and regulations.

The Bill Rendering Company will:

- determine and include on the access bill all usage data and all other recurring and nonrecurring rates and charges per its access tariff; and

- forward the bill to the customer

The customer will remit the payment to the Bill Rendering Company.

(2) Multiple Bill Option

Under the Multiple Bill Option each company providing the access service will render an access bill to the customer for its portion of the service based on its access tariff rates and regulations. For switched access Multiple bills, the end office company is generally the Initial Billing Company (IBC). The IBC is the company that calculates the access minutes to be billed to the customer and provides this data to each connecting company providing service, i.e., the Subsequent Billing Company(s). Each company, IBC and SBC, will:

- prepare its own bill;

- determine its charge(s) for Local Transport, Directory Transport, and/or Channel Mileage as set forth in (3) following;

- determine and include all recurring and nonrecurring rates and charges of its access tariff;

- reflect its Billing Account Reference (BAR) and all connection company Billing Account Reference (BACR) code(s);

- forward its bill to the customer.

The customer will remit payment directly to each Bill Rendering Company.

TARIFF BRANCH
RECEIVED
7/17/2006
PUBLIC SERVICE
COMMISSION
OF KENTUCKY

INTRASTATE ACCESS SERVICES TARIFF

2. General Regulations (Cont'd)

2.4 Payment Arrangements and Credit Allowances (Cont'd)

2.4.7 Access Services Provided by More Than One Telephone Company (Cont'd)

(B) Meet Point Billing (Cont'd)

(3) Determination of Meet Point Billed Local Transport, Directory Transport and Channel Mileage Charges

Each Telephone Company's portion of the Local Transport, Directory Transport and Channel Mileage will be developed as follows:

(a) Determine the appropriate Local Transport or Channel Mileage by computing the number of airline miles between the Telephone Company premises (end office, access tandem or serving wire centers for Switched Access or serving wire centers for Special Access) using the V&H method set forth respectively in 6.4.6 and 7.2.5 following.

(b) Determine the billing percentage (BP), as set forth in NATIONAL EXCHANGE CARRIER ASSOCIATION, INC. TARIFF F.C.C. NO. 4, which represents the portion of the service provided by each Telephone Company.

(c) For Feature Groups A, B, C and D Tandem Switched Transport

- multiply the number of originating and terminating access minutes of use routed over the facility times the number of airline miles, as set forth in (a) preceding, times the BP for each Telephone Company, as set forth in (b) preceding, times the Tandem Switched Facility or Local Transport Facility rate;

- multiply the Tandem Switched Termination or Local Transport Termination rate times the number of originating and terminating access minutes routed over the facility.

- When a tandem office is located within the operating territory of a Telephone Company participating in NECA's Traffic Sensitive Pool, multiply the Tandem Switching rate times the number of originating and terminating access minutes that are switched at the tandem.

The Tandem Switched Termination rate is applied as set forth in 6.1.3(A) following. The Switched Access Nonrecurring Charges are applied as set forth in 6.4.1(B) following. (Note: The BP is not applied to the Switched Access Tandem Switched Termination rate or any Nonrecurring Charge.)

TARIFF BRANCH
RECEIVED
7/17/2006
PUBLIC SERVICE
COMMISSION
OF KENTUCKY

INTRASTATE ACCESS SERVICES TARIFF

2. General Regulations (Cont'd)

2.4 Payment Arrangements and Credit Allowances (Cont'd)

2.4.7 Access Services Provided By More Than One Telephone Company (Cont'd)

(B) Meet Point Billing (Cont'd)

(3) Determination of Meet Point Billed Local Transport, Directory Transport and Channel Mileage Charges (Cont'd)

(d) For Feature Groups A, B, C, and D Direct Trunked Transport:

- multiply the number of airline miles, as set forth in (a) preceding, times the BP for each Telephone Company, as set forth in (b) preceding, times the Direct Trunked Facility rate.

- The Direct Trunked Termination rate is applied as set forth in 6.1.3(A) following. The Switched Access Nonrecurring Charges are applied as set forth in 6.4.1(B) following. (Note: The BP is not applied to either the Switched Access Direct Trunked Termination rate or any Nonrecurring Charge.)

(e) For Feature Groups A, B, C, and D.

- When the end office (which may be a Remote Switching Module or WATS Serving Office) is located within the operating territory of a Telephone Company participating in NECA's Traffic Sensitive Pool, if applicable multiply the Residual Interconnection Charge rate times the number of originating and terminating access minutes that are switched at the end office.

- When the Entrance Facility and/or Multiplexing equipment is located within the operating territory of a Telephone Company participating in NECA's Traffic Sensitive Pool, the Entrance Facility and/or Multiplexing charge will apply.

- The Billing Percentage (BP) is not applicable to the Residual Interconnection charge, Entrance Facility or Multiplexer.

TARIFF BRANCH
RECEIVED
7/17/2006
PUBLIC SERVICE
COMMISSION
OF KENTUCKY

INTRASTATE ACCESS SERVICES TARIFF

2. General Regulations (Cont'd)

2.4 Payment Arrangements and Credit Allowances (Cont'd)

2.4.7 Access Services Provided by More Than One Telephone Company (Cont'd)

(B) Meet Point Billing (Cont'd)

(3) Determination of Meet Point Billed Local Transport, Directory Transport and Channel Mileage Charges (Cont'd)

(f) For Special Access, multiply the number of airline miles, as set forth in (a) preceding, times the BP for each Telephone Company, as set forth in (b) preceding, times the Channel Mileage Facility rate and add the Channel Mileage Termination rate.

The Special Access Channel Mileage Termination rate and nonrecurring charges are applied as set forth in 7.2.1(B)(2) and 7.2.2(C) following. (Note: The BP is not applied to either the Channel Mileage Termination Recurring Rate or any Nonrecurring Charge.)

(g) When three or more Telephone Companies are involved in providing an Access Service, the intermediate Telephone Company(s) will determine the appropriate charges as set forth in (c) through (g) preceding. Additionally, when a segment of the Tandem Switched Facility, Direct Trunked Facility or Channel Mileage Facility is measured to the intermediate office(s), the Tandem Switched Termination, Direct Trunked Termination or Channel Mileage Termination rates are also applied at the intermediate Telephone Company(s) office(s).

TARIFF BRANCH
RECEIVED
7/17/2006
PUBLIC SERVICE
COMMISSION
OF KENTUCKY

INTRASTATE ACCESS SERVICES TARIFF

2. General Regulations (Cont'd)

2.4 Payment Arrangements and Credit Allowances (Cont'd)

2.4.7 Access Services Provided by More Than One Telephone Company (Cont'd)

(B) Meet Point Billing (Cont'd)

(3) Determination of Meet Point Billed Local Transport, Directory Transport and Channel Mileage Charges (Cont'd)

(i) Example - Switched Access

Layout

- Feature Group D Switched Access is ordered to End Office A.
- End Office A is in operating territory of Telephone Company A (TC-A).
- Customer designated premises is in operating territory of a Telephone Company (TC-B).

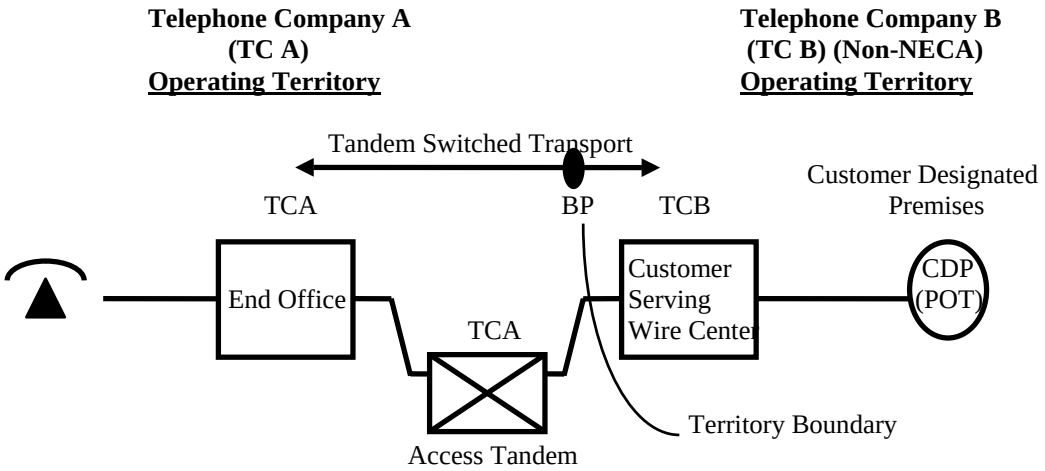

BP = Billing Percentage

TARIFF BRANCH
RECEIVED
7/17/2006
PUBLIC SERVICE COMMISSION OF KENTUCKY

INTRASTATE ACCESS SERVICES TARIFF

2. General Regulations (Cont'd)

2.4 Payment Arrangements and Credit Allowances (Cont'd)

2.4.7 Access Services Provided by More Than One Telephone Company (Cont'd)

(B) Meet Point Billing (Cont'd)

(3) Determination of Meet Point Billed Local Transport, Directory Transport and Channel Mileage Charges (Cont'd)

(i) Example - Switched Access (Cont'd)

The following example reflects the rate calculations for TC-A, a Telephone Company participating in NECA's Traffic Sensitive Pool. Rates for a Non-Traffic Sensitive Pool member company would appear in that company's access tariff.

- Assume:

Airline miles (ALM) TC A premises to TC B Serving Wire Center = 22.1, rounded = 23.

Billing Percentage (BP)
TC A = 80%
TC B = 20%

Access Minutes (AM) = 9000

Tandem Switched Facility Rates = TSF

Tandem Switched Termination Rate = TST

Tandem Switching Rate = TS

Residual Interconnection Charge = RIC

Carrier Common Line Charge = CCL

End Office Charges = EO

TARIFF BRANCH
RECEIVED
7/17/2006
PUBLIC SERVICE
COMMISSION
OF KENTUCKY

INTRASTATE ACCESS SERVICES TARIFF

2. General Regulations (Cont'd)

2.4 Payment Arrangements and Credit Allowances (Cont'd)

2.4.7 Access Services Provided by More Than One Telephone Company (Cont'd)

(B) Meet Point Billing (Cont'd)

(3) Determination of Meet Point Billed Local Transport, Directory Transport and Channel Mileage Charges (Cont'd)

(i) Example - Switched Access (Cont'd)

- Telephone Company A charges are:

Tandem Switched Facility charge
= 9,000 min. x 23 mi. x 80% x TSF rate

Tandem Switched Termination charge
= 9,000 min. x TST rate

Tandem Switching charge
= 9,000 min. x TS rate

Residual Interconnection Charge
= 9,000 min. x RIC rate

Carrier Common Line charge
= 9,000 min. x CCL rate

End Office Charges
= 9,000 min. x EO rates

2.5 Connections

Equipment and Systems (i.e., terminal equipment, multiline terminating systems and communications systems) may be connected with Switched and Special Access Service furnished by the Telephone Company where such connection is made in accordance with the provisions specified in Technical Reference Publication AS No.1 and in 2.1 preceding.

TARIFF BRANCH
RECEIVED
7/17/2006
PUBLIC SERVICE
COMMISSION
OF KENTUCKY

2. General Regulations (Cont'd)

2.6 Definitions

Certain terms used herein are defined as follows:

800 Data Base Access Service

The term “800 Data Base Access Service” denotes a service which uses a data base system to identify 800 access customers on a 10-digit basis. For purposes of administering the rules and regulations set forth in this tariff regarding the provision of 800 Database Access, except where otherwise specified, 800 Database Access Service shall include the following service access codes 800, 888, 877, 866, 855, 844, 833, and 822.

800 Series

The term 800 series denotes the service access codes of 800, 888, 877, 866, 855, 844, 833, and 822.

Access Code

The term "Access Code", with the exception of Feature Group B (FGB) with an Abbreviated Dial Arrangement (ADA), denotes a uniform access code assigned by the Telephone Company to an individual customer. The Carrier Access Code (CAC) has the form 101XXXX and the Carrier Identification Code (CIC) has the form 950-XXXX. Access codes for FGB with an ADA are explained in 6.9.2 following.

Access Minutes

For the purpose of calculating chargeable usage, the term "Access Minutes" denotes customer usage of exchange facilities in intrastate or foreign service. On the originating end of an intrastate or foreign call, usage is measured from the time the originating end user's call is delivered by the Telephone Company to and acknowledged as received by the customer's facilities connected with the originating exchange. On the terminating end of an intrastate or foreign call, usage is measured from the time the call is received by the end user in the terminating exchange. Timing of usage at both originating and terminating ends of an intrastate or foreign call shall terminate when the calling or called party disconnects, whichever event is recognized first in the originating and terminating and exchanges, as applicable.

Access Tandem

The term "Access Tandem" denotes a Telephone Company or centralized equal access provider switching system that provides a concentration and distribution function for originating or terminating traffic between end offices and a customer's designated premises.

TARIFF BRANCH
RECEIVED
7/17/2006
PUBLIC SERVICE
COMMISSION
OF KENTUCKY

INTRASTATE ACCESS SERVICES TARIFF

2. General Regulations (Cont'd)

2.6 Definitions (Cont'd)

Add/Drop Multiplexing

The term “Add/Drop Multiplexing” denotes a multiplexing function offered in connection with SONET that allows lower level signals to be added or dropped from a high speed optical carrier channel in a wire center. The connection to the add/drop multiplexer is via a channel to a Central Office Port at a specific digital speed (i.e., DS3, DS1, etc.).

Aggregator

The term “Aggregator” denotes any entity that, in the ordinary course of its operations, makes telephones available to the public or to transient users of its premises, for interstate telephone calls using a provider of operator services.

Answer/Disconnect Supervision

The term "Answer/Disconnect Supervision" denotes the transmission of the switch trunk equipment supervisory signal (off-hook or on-hook) to the customer's point of termination as an indication that the called party has answered or disconnected.

Attenuation Distortion

The term "Attenuation Distortion" denotes the difference in loss at specified frequencies relative to the loss at 1004 Hz, unless otherwise specified.

Balance (100 Type) Test Line

The term "Balance (100 Type) Test Line" denotes an arrangement in an end office which provides for balance and noise testing.

Bit

The term "Bit" denotes the smallest unit of information in the binary system of notation.

Business Day

The term "Business Day" denotes the times of day that a company is open for business. Generally, in the business community, these are 8:00 or 9:00 A.M. to 5:00 or 6:00 P.M., respectively, with an hour for lunch, Monday through Friday, resulting in a standard forty (40) hour work week. However, Business Day hours for the Telephone Company may vary based on company policy, union contract and location. To determine such hours for an individual company, or company location, that company should be contacted at the address shown under the Issuing Carrier's name listed on Title Page 2.

TARIFF BRANCH
RECEIVED
7/17/2006
PUBLIC SERVICE
COMMISSION
OF KENTUCKY

INTRASTATE ACCESS SERVICES TARIFF

2. General Regulations (Cont'd)

2.6 Definitions (Cont'd)

Busy Hour Minutes of Capacity (BHMC)

The term "Busy Hour Minutes of Capacity (BHMC)" denotes the customer specified maximum amount of Switched Access Service and/or Directory Assistance Service access minutes the customer expects to be handled in an end office switch during any hour in an 8:00 A.M. to 11:00 P.M. period for the Feature Group and/or Directory Assistance Service ordered. This customer specified BHMC quantity is the input data the Telephone Company uses to determine the number of transmission paths for the Feature Group and/or Directory Assistance Service ordered.

Call

The term "Call" denotes a customer attempt for which the complete address information (e.g., 0-, 911, or 10 digits) is provided to the serving dial tone office.

Carrier or Common Carrier

See Interexchange Carrier.

CCS

The term "CCS" denotes a hundred call seconds, which is a standard unit of traffic load that is equal to 100 seconds of usage or capacity of a group of servers (e.g., trunks).

Central Office

See End Office.

TARIFF BRANCH
RECEIVED
7/17/2006
PUBLIC SERVICE
COMMISSION
OF KENTUCKY

INTRASTATE ACCESS SERVICES TARIFF

2. General Regulations (Cont'd)

2.6 Definitions (Cont'd)

Central Office Maintenance Technician

The term "Central Office Maintenance Technician" denotes a Telephone Company employee who performs installation and/or repair work, including testing and trouble isolation, within the Telephone Company Central Office.

Central Office Prefix

The term "Central Office Prefix" denotes the first three digits (NXX) of the seven digit telephone number assigned to a customer's Telephone Exchange Service when dialed on a local basis.

Channel(s)

The term "Channel(s)" denotes an electrical or photonic, in the case of fiber optic-based transmission systems, communications path between two or more points of termination.

Channel Service Unit

The term "Channel Service Unit" denotes equipment which performs one or more of the following functions: termination of a digital facility, regeneration of digital signals, detection and/or correction of signal format error, and remote loop back.

Channelize

The term "Channelize" denotes the process of multiplexing-demultiplexing wider bandwidth or higher speed channels into narrower bandwidth or lower speed channels.

Clear Channel Capability

The term "Clear Channel Capability" denotes the ability to transport twenty-four 64 Kbps over a DS1 Mbps High Capacity service via a B8ZS line code format.

C-Message Noise

The term "C-Message Noise" denotes the frequency weighted average noise within an idle voice channel. The frequency weighting, called C-message, is used to simulate the frequency characteristic of the 500-type telephone set and the hearing of the average subscriber.

TARIFF BRANCH
RECEIVED
7/17/2006
PUBLIC SERVICE
COMMISSION
OF KENTUCKY

INTRASTATE ACCESS SERVICES TARIFF

2. General Regulations (Cont'd)

2.6 Definitions (Cont'd)

C-Notched Noise

The term "C-Notched Noise" denotes the C-message frequency weighted noise on a voice channel with a holding tone, which is removed at the measuring end through a notch (very narrow band) filter.

Committed Information Rate

The term “Committed Information Rate” denotes the transmission speed specified by the customer at which the Frame Relay Access Service Network commits to transfer data between two ports.

Common Channel Signaling

The term "Common Channel Signaling" (CCS) denotes a high speed packet switched communications network which is separate (out of band) from the public packet switched and message networks. Its purpose is to carry addressed signaling messages for individual trunk circuits and/or database related services between Signaling Points in the CCS network.

Common Line

The term "Common Line" denotes a line, trunk, pay telephone line or other facility provided under the general and/or local exchange service tariffs of the Telephone Company, terminated on a central office switch. A common line-residence is a line or trunk provided under the residence regulations of the general and/or local exchange service tariffs. A common line-business is a line provided under the business regulations of the general and/or local exchange service tariffs.

Communications System

The term "Communications System" denotes channels and other facilities which are capable of communications between terminal equipment provided by other than the Telephone Company.

Customer(s)

The term "Customer(s)" denotes any individual, partnership, association, joint-stock company, trust, corporation, or governmental entity or other entity which subscribes to the services offered under this tariff, including both Interexchange Carriers (ICs) and End Users.

TARIFF BRANCH
RECEIVED
7/17/2006
PUBLIC SERVICE
COMMISSION
OF KENTUCKY

2. General Regulations (Cont'd)

2.6 Definitions (Cont'd)

Customer Designated Premises

The term "Customer Designated Premises" denotes the premises specified by the customer for the provision of Access Service.

Customer Node

The term “Customer Node” denotes the equipment located at a customer designated premises that terminates a high speed optical channel and converts the signal from an optical to an electrical format. Each electrical signal requires a discrete Customer Premises Port connection (i.e., DS1, DS3, STS-1) that allows for the provision of lower level digital signals.

Data Transmission (107 Type) Test Line

The term "Data Transmission (107 Type) Test Line" denotes an arrangement which provides for a connection to a signal source which provides test signals for one-way testing of data and voice transmission parameters.

Decibel

The term "Decibel" denotes a unit used to express relative difference in power, usually between acoustic or electric signals, equal to ten (10) times the common logarithm of the ratio of two signal powers.

Decibel Reference Noise C-Message Weighting

The term "Decibel Reference Noise C-Message Weighting" denotes noise power measurements with C-Message Weighting in decibels relative to a reference 1000 Hz tone of 90 dB below 1 milliwatt.

Decibel Reference Noise C-Message Referenced to O

The term "Decibel Reference Noise C-Message Referenced to O" denotes noise power in "Decibel Reference Noise C-Message Weighting" referred to or measured at a zero transmission level point.

Detail Billing

The term "Detail Billing" denotes the listing of each message and/or rate element for which charges to a customer are due on a bill prepared by the Telephone Company.

Digital Switched 56 Service

A switched access optional feature available with Feature Group C and Feature Group D Access, which provides for data transmission at up to 56 kilobits per second.

TARIFF BRANCH
RECEIVED
7/17/2006
PUBLIC SERVICE
COMMISSION
OF KENTUCKY

INTRASTATE ACCESS SERVICES TARIFF

2. General Regulations (Cont'd)

2.6 Definitions (Cont'd)

Directory Assistance

The term "Directory Assistance" denotes the provision of telephone numbers by a Telephone Company operator when the operator location is accessed by a customer by dialing NPA + 555-1212 or 555-1212.

Direct-Trunked Transport

The term "Direct-Trunked Transport" denotes transport from the serving wire center to the end office or from the serving wire center to the access tandem on circuits dedicated to the use of a single customer.

Directory Assistance Location

The term "Directory Assistance Location" denotes a Telephone Company office where telephone company equipment first receives the Directory Assistance call from the customer's end user and selects the first operator position to respond to the Directory Assistance call.

Dual Tone Multifrequency Address Signaling

The term "Dual Tone Multifrequency Address Signaling" denotes a type of signaling that is an optional feature of Switched Access Feature Group A. It may be utilized when Feature Group A is being used in the terminating direction (from the point of termination with the customer to the local exchange end office). An office arranged for Dual Tone Multifrequency Signaling would expect to receive address signals from the customer in the form of Dual Tone Multifrequency signals.

Echo Control

The term "Echo Control" denotes the control of reflected signals in a telephone transmission path.

Echo Path Loss

The term "Echo Path Loss" denotes the measure of reflected signal at a 4-wire point of interface without regard to the send and receive Transmission Level Point.

Echo Return Loss

The term "Echo Return Loss" denotes a frequency weighted measure of return loss over the middle of the voiceband (approximately 500 to 2500 Hz), where talker echo is most annoying.

TARIFF BRANCH
RECEIVED
7/17/2006
PUBLIC SERVICE
COMMISSION
OF KENTUCKY

INTRASTATE ACCESS SERVICES TARIFF

2. General Regulations (Cont'd)

2.6 Definitions (Cont'd)

Effective 2-Wire

The term "Effective 2-Wire" denotes a condition which permits the simultaneous transmission in both directions over a channel, but it is not possible to insure independent information transmission in both directions. Effective 2-wire channels may be terminated with 2-wire or 4-wire interfaces.

Effective 4-Wire

The term "Effective 4-Wire" denotes a condition which permits the simultaneous independent transmission of information in both directions over a channel. The method of implementing effective 4-wire transmission is at the discretion of the Telephone Company (physical, time domain, frequency-domain separation or echo cancellation techniques). Effective 4-wire channels may be terminated with a 2-wire interface at the customer's premises. However, when terminated 2-wire, simultaneous independent transmission cannot be supported because the two wire interface combines the transmission paths into a single path.

End Office

The term "End Office" denotes a local Telephone Company switching system where Telephone Exchange Service customer station loops are terminated for purposes of interconnection to each other and to trunks. This term includes Remote Switching Modules/Systems served by a Host Central Office in a different wire center.

End User

The term "End User" means any customer of an intrastate or foreign telecommunications service that is not a carrier, except that a carrier other than a telephone company shall be deemed to be an "end user" when such carrier uses a telecommunications service for administrative purposes, and a person or entity that offers telecommunications service exclusively as a reseller shall be deemed to be an "end user" if all resale transmissions offered by such reseller originate on the premises of such reseller.

TARIFF BRANCH
RECEIVED
7/17/2006
PUBLIC SERVICE
COMMISSION
OF KENTUCKY

INTRASTATE ACCESS SERVICES TARIFF

2. General Regulations (Cont'd)

2.6 Definitions (Cont'd)

Enhanced Service

The term "Enhanced Service," as defined in Part 64 of the F.C.C.'s Rules and Regulations, are services," offered over common carrier transmission facilities used in interstate communications, which employ computer processing applications that act on the format, content, code, protocol or similar aspects of the subscriber's transmitted information; provide the subscriber additional, different, or restructured information; or involve subscriber interaction with stored information."

Entrance Facility

The term "Entrance Facility" denotes a Switched Access Service dedicated Local Transport facility between the customer's serving wire center and the customer designated premises.

Entry Switch

See First Point of Switching

Envelope Delay Distortion

The term "Envelope Delay Distortion" denotes a measure of the linearity of the phase versus frequency of a channel.

Equal Level Echo Path Loss

The term "Equal Level Echo Path Loss" (ELEPL) denotes the measure of Echo Path Loss (EPL) at a 4-wire interface which is corrected by the difference between the send and receive Transmission Level Point (TLP). [ELEPL = EPL - TLP (send) + TLP (receive)].

Exchange

The term "Exchange" denotes a unit generally smaller than a local access and transport area, established by the Telephone Company for the administration of communications service in a specified area which usually embraces a city, town or village and its environs. It consists of one or more central offices together with the associated facilities used in furnishing communications service within that area. The exchange includes any Extended Area Service area that is an enlargement of a Telephone Company's exchange area to include nearby exchanges. One or more designated exchanges comprise a given local access and transport area.

TARIFF BRANCH
RECEIVED
7/17/2006
PUBLIC SERVICE
COMMISSION
OF KENTUCKY

2. General Regulations (Cont'd)

2.6 Definitions (Cont'd)

Exit Message

The term "Exit Message" denotes an SS7 message sent to an end office by the Telephone Company's tandem switch to mark the Carrier Connect Time when the Telephone Company's tandem switch sends an Initial Address Message to an interexchange customer.

Expected Measured Loss

The term "Expected Measured Loss" denotes a calculated loss which specifies the end-to-end 1004-Hz loss on a terminated test connection between two readily accessible manual or remote test points. It is the sum of the inserted connection loss and test access loss including any test pads.

Extended Area Service

See Exchange.

Extended PVC

The term “Extended PVC” denotes the interconnection of a port on a NECA telephone company’s frame relay switch with a port on another NECA or non-NECA interconnected telephone company’s frame relay switch.

First Point of Switching

The term "First Point of Switching" denotes the first Telephone Company or centralized equal access provider location at which switching occurs on the terminating path of a call proceeding from the customer designated premises to the terminating end office and, at the same time, the last Telephone Company or centralized equal access provider location at which switching occurs on the originating path of a call proceeding from the originating end office to the customer designated premises.

Frame

The term “Frame” denotes a group of data bits in a specific format, which enables network equipment to recognize the meaning and purpose of the specific bits.

Frame Relay Access Customer Port

The term “Frame Relay Access Customer Port” denotes the physical location in the telephone company switching offices where the access customer’s special access facility connects to the telephone company’s Frame Relay Access Service network. It specifies how a frame relay switch sends and receives data from a frame relay access customer’s network.

TARIFF BRANCH
RECEIVED
7/17/2006
PUBLIC SERVICE
COMMISSION
OF KENTUCKY

INTRASTATE ACCESS SERVICES TARIFF

2. General Regulations (Cont'd)

2.6 Definitions (Cont'd)

Frame Relay Access Service

The term "Frame Relay Access Service" denotes a medium-speed, connection-oriented packet-switched data service that allows for the interconnection of Local Area Networks or other compatible end user customer premises equipment for the purpose of connecting to an access customer's intrastate network.

Frame Relay End User Port

The term " Frame Relay End User Port" denotes the physical location in the telephone company switching office where the special access facility of the customer connects to the Frame Relay Access Service Network. It receives the data frame from the end user customer's Local Area Network or other compatible CPE devices and verifies that the end user connection and the corresponding access customer connection are valid before relaying the frame to the destination end point.

Frequency Shift

The term "Frequency Shift" denotes the change in the frequency of a tone as it is transmitted over a channel.

Grandfathered

The term "Grandfathered" denotes Terminal Equipment, Multiline Terminating Systems and Protective Circuitry directly connected to the facilities utilized to provide services under the provisions of this tariff, and which are considered grandfathered under Part 68 of the F.C.C.'s Rules and Regulations.

Host Central Office

The term "Host Central Office" denotes an electronic local Telephone Company End Office where Telephone Exchange Service customer station loops are terminated for purposes of interconnection to each other and to trunks. Additionally, this type of End Office contains the central call processing functions which service itself and its Remote Switching Modules/Systems.

Hub

The term "Hub" denotes a wire center at which bridging or multiplexing functions are performed for customers served out of any wire center.

TARIFF BRANCH
RECEIVED
7/17/2006
PUBLIC SERVICE
COMMISSION
OF KENTUCKY

INTRASTATE ACCESS SERVICES TARIFF

2. General Regulations (Cont'd)

2.6 Definitions (Cont'd)

Immediately Available Funds

The term "Immediately Available Funds" denotes a corporate or personal check drawn on a bank account and funds which are available for use by the receiving party on the same day on which they are received and include U.S. Federal Reserve bank wire transfers, U.S. Federal Reserve notes (paper cash), U.S. coins, U.S. Postal Money Orders and New York Certificates of Deposit.

Impedance Balance

The term "Impedance Balance" denotes the method of expressing Echo Return Loss and Singing Return Loss at a 4-wire interface whereby the gains and/or loss of the 4-wire portion of the transmission path, including the hybrid, are not included in the specification.

Impulse Noise

The term "Impulse Noise" denotes any momentary occurrence of the noise on a channel over a specified level threshold. It is evaluated by counting the number of occurrences which exceed the threshold.

Individual Case Basis

The term "Individual Case Basis" denotes a condition in which the regulations, if applicable, rates and charges for an offering under the provisions of this tariff are developed based on the circumstances in each case.

Initial Address Message

The term "Initial Address Message" denotes an SS7 message sent in the forward direction to initiate trunk set up, reserve an outgoing trunk and process the information about that trunk along with other data relating to the routing and handling of the call to the next switch.

Inserted Connection Loss

The term "Inserted Connection Loss" denotes the 1004 Hz power difference (in dB) between the maximum power available at the originating end and the actual power reaching the terminating end through the inserted connection.

TARIFF BRANCH
RECEIVED
7/17/2006
PUBLIC SERVICE
COMMISSION
OF KENTUCKY

2. General Regulations (Cont'd)

2.6 Definitions (Cont'd)

Installation and Repair Technician

The term "Installation and Repair Technician" denotes a Telephone Company employee who performs installation and/or repair work, including testing and trouble isolation, outside of the Telephone Company Central Office and generally at the customer's designated premises.

Interexchange Carrier (IC) or Interexchange Common Carrier

The terms "Interexchange Carrier" (IC) or "Interexchange Common Carrier" denotes any individual, partnership, association, joint-stock company, trust, governmental entity or corporation engaged for hire in interstate or foreign communication by wire or radio, between two or more exchanges.

Intermediate Hub

The term " Intermediate Hub" denotes a wire center at which bridging or multiplexing functions are performed only for customers served by that wire center and wire centers that subtend the hub, as specified in National Exchange Carrier Association, Inc. Tariff F.C.C. No. 4.

Intermodulation Distortion

The term "Intermodulation Distortion" denotes a measure of the nonlinearity of a channel. It is measured using four tones, and evaluating the ratios (in dB) of the transmitted composite four-tone signal power to the second-order products of the tones (R2), and the third-order products of the tones (R3).

Interstate Communications

The term "Interstate Communications" denotes both interstate and foreign communications.

Intrastate Communications

The term "Intrastate Communications" denotes any communications within a state subject to oversight by a state regulatory commission as provided by the laws of the state involved.

TARIFF BRANCH
RECEIVED
7/17/2006
PUBLIC SERVICE
COMMISSION
OF KENTUCKY

INTRASTATE ACCESS SERVICES TARIFF

2. General Regulations (Cont'd)

2.6 Definitions (Cont'd)

Legal Holiday

The term "Legal Holiday" denotes days other than Saturday or Sunday for which the Telephone Company is normally closed. These include New Year's Day, Independence Day, Thanksgiving Day, Christmas Day and a day when Washington's Birthday, Memorial Day or Columbus Day is legally observed and other locally observed holidays when the Telephone Company is closed.

Line Side Connection

The term "Line Side Connection" denotes a connection of a transmission path to the line side of a local exchange switching system.

Local Access and Transport Area (LATA)

The term "Local Access and Transport Area" denotes a geographic area established for the provision and administration of communications service. It encompasses one or more designated exchanges, which are grouped to serve common social, economic and other purposes.

Local Area Network

The term “Local Area Network” denotes a network permitting the interconnection and intercommunication of a group of computers.

Loss Deviation

The term "Loss Deviation" denotes the variation of the actual loss from the designed value.

Major Fraction Thereof

The term "Major Fraction Thereof" denotes any period of time in excess of 1/2 of the stated amount of time. As an example, in considering a period of 24 hours, a major fraction thereof would be any period of time in excess of 12 hours exactly. Therefore, if a given service is interrupted for a period of thirty-six hours and fifteen minutes, the customer would be given a credit allowance for two twenty-four hour periods for a total of forty-eight hours.

Message

The term "Message" denotes a "call" as defined preceding.

TARIFF BRANCH
RECEIVED
7/17/2006
PUBLIC SERVICE
COMMISSION
OF KENTUCKY

INTRASTATE ACCESS SERVICES TARIFF

2. General Regulations (Cont'd)

2.6 Definitions (Cont'd)

Milliwatt (102 Type) Test Line

The term "Milliwatt (102 Type) Test Line" denotes an arrangement in an end office which provides a 1004 Hz tone at 0 dBm0 for one-way transmission measurements towards the customer's premises from the Telephone Company end office.

Network Control Signaling

The term "Network Control Signaling" denotes the transmission of signals used in the telecommunications system which perform functions such as supervision (control, status, and charge signals), address signaling (e.g., dialing), calling and called number identifications, rate of flow, service selection error control and audible tone signals (call progress signals indicating re-order or busy conditions, alerting, coin denominations, coin collect and coin return tones) to control the operation of the telecommunications system.

Nonsynchronous Test Line

The term "Nonsynchronous Test Line" denotes an arrangement in step-by-step end offices which provides operational tests which are not as complete as those provided by the synchronous test lines, but can be made more rapidly.

North American Numbering Plan

The term "North American Numbering Plan" denotes a three-digit area code (Numbering Plan Area - NPA) and a seven-digit telephone number made up of a three-digit Central Office prefix plus a four-digit station number.

Off-hook

The term "Off-hook" denotes the active condition of Switched Access or a Telephone Exchange Service line.

TARIFF BRANCH
RECEIVED
7/17/2006
PUBLIC SERVICE
COMMISSION
OF KENTUCKY

2. General Regulations (Cont'd)

2.6 Definitions (Cont'd)

On-hook

The term "On-hook" denotes the idle condition of Switched Access or a Telephone Exchange Service line.

Open Circuit Test Line

The term "Open Circuit Test Line" denotes an arrangement in an end office which provides an ac open circuit termination of a trunk or line by means of an inductor of several Henries.

Optical Carrier Channel

The term “Optical Carrier Channel” denotes the high speed optical communications path for transporting information utilizing a Synchronous Optical Channel platform. The channel is provided at transmission rates of 155.52 Mbps. (OC3) and 622.08 Mbps. (OC12).

Optical Carrier Rate (OC-N)

The term “Optical Carrier Rate” denotes the line rate being transmitted on an optical carrier channel. A SONET transmission rate is equivalent to “N” times the OC1 line rate of 51.84 Mbps.

Optical Line Termination

The term “Optical Line Termination” denotes the network interface on the customer designated premises equipment that provides for an optical handoff.

Originating Direction

The term "Originating Direction" denotes the use of access service for the origination of calls from an End User Premises to an IC Premises.

Pay Telephone

The term "Pay Telephone" denotes a coin or coinless instrument provided in a public or semipublic place where Payphone Service Provider customers can originate telephonic communications and pay the applicable charges by (1) inserting coins into the equipment, or (2) using a credit card, or (3) third party billing the call or (4) calling collect.

Payphone Service Provider

The term “Payphone Service Provider” denotes an entity that provides pay telephone service, which is the provision of public, semi-public or inmate pay telephone service.

TARIFF BRANCH
RECEIVED
7/17/2006
PUBLIC SERVICE
COMMISSION
OF KENTUCKY

INTRASTATE ACCESS SERVICES TARIFF

2. General Regulations (Cont'd)

2.6 Definitions (Cont'd)

Permanent Virtual Connection (PVC)

The term “PVC” denotes a software defined communications path between two port connections within the Frame Relay Access Service network.

Phase Jitter

The term "Phase Jitter" denotes the unwanted phase variations of a signal.

Point of Termination

The term "Point of Termination" denotes the point of demarcation within a customer-designated premises at which the Telephone Company's responsibility for the provision of Access Service ends.

Premises

The term "Premises" denotes a building or buildings on continuous property (except Railroad Right-of-Way, etc.) not separated by a public highway.

Release Message

The term "Release Message" denotes an SS7 message sent in either direction to indicate that a specific circuit is being released.

Remote Switching Modules/Systems

The term "Remote Switching Modules/Systems" denotes small, remotely controlled electronic end office switches which obtain their call processing capability from an electronic Host Central Office. The Remote Switching Modules/Systems cannot accommodate direct trunks to an IC.

Return Loss

The term "Return Loss" denotes a measure of the similarity between the two impedances at the junction of two transmission paths. The higher the return loss, the higher the similarity.

Registered Equipment

The term "Registered Equipment" denotes the customer's premises equipment which complies with and has been approved within the Registration Provisions of Part 68 of the F.C.C.'s Rules and Regulations.

TARIFF BRANCH
RECEIVED
7/17/2006
PUBLIC SERVICE
COMMISSION
OF KENTUCKY

INTRASTATE ACCESS SERVICES TARIFF

2. General Regulations (Cont'd)

2.6 Definitions (Cont'd)

Service Access Code

The term "Service Access Code" denotes a 3 digit code in the NPA format which is used as the first three digits of a 10 digit address and which is assigned for special network uses. Whereas NPA codes are normally used for identifying specific geographical areas, certain Service Access Codes have been allocated in the North American Numbering Plan to identify generic services or to provide access capability. Examples of Service Access Codes include the 800 and 900 codes.

Service Switching Point (SSP)

The term “Service Switching Point” denotes an end office or tandem which, in addition to having SS7 and SP capabilities, is also equipped to query centralized data bases.

Serving Wire Center

The term "Serving Wire Center" denotes the wire center from which the customer designated premises would normally obtain dial tone from the Telephone Company.

Seven Digit Manual Test Line

The term "Seven Digit Manual Test Line" denotes an arrangement which allows the Customer to select balance, milliwatt and synchronous test lines by manually dialing a seven digit number over the associated access connection.

Shortage of Facilities or Equipment

The term "Shortage of Facilities or Equipment" denotes a condition which occurs when the Telephone Company does not have appropriate cable, switching capacity, bridging or, multiplexing equipment, etc., necessary to provide the Access Service requested by the customer.

TARIFF BRANCH
RECEIVED
7/17/2006
PUBLIC SERVICE
COMMISSION
OF KENTUCKY

INTRASTATE ACCESS SERVICES TARIFF

2. General Regulations (Cont'd)

2.6 Definitions (Cont'd)

Short Circuit Test Line

The term "Short Circuit Test Line" denotes an arrangement in an end office which provides for an ac short circuit termination of a trunk or line by means of a capacitor of at least four microfarads.

Signal-to-C-Notched Noise Ratio

The term "Signal-to-C-Notched Noise Ratio" denotes the ratio in dB of a test signal to the corresponding C-Notched Noise.

Signaling Point (SP)

The term "Signaling Point (SP)" denotes an SS7 network interface element capable of originating and terminating SS7 trunk signaling messages.

Signaling Point of Interface (SPOI)

The term “Signaling Point of Interface (SPOI)” denotes the customer designated location where the SS7 signaling information is exchanged between the Telephone Company and the customer.

Signaling Return Loss

The term "Signaling Return Loss" denotes the frequency weighted measure of return loss at the edges of the voiceband (200 to 500 Hz and 2500 to 3200 Hz), where singing (instability) problems are most likely to occur.

Signaling System 7 (SS7)

The term "Signaling System 7 (SS7)" denotes the layered protocol used for standardized common channel signaling in the United States and Puerto Rico.

Signal Transfer Point (STP)

The term "Signal Transfer Point (STP)" denotes a packet switch which provides access to the Telephone Company's SS7 network and performs SS7 message signal routing and screening.

Signal Transfer Point (STP) Port

The term "Signal Transfer Point (STP) Port" denotes the point of termination and interconnection to the STP.

TARIFF BRANCH
RECEIVED
7/17/2006
PUBLIC SERVICE
COMMISSION
OF KENTUCKY

INTRASTATE ACCESS SERVICES TARIFF

2. **General Regulations (Cont'd)**

2.6 **Definitions (Cont'd)**

Special Order

The term "Special Order" denotes an order for a Directory Assistance Service.

Standard PVC

The term “Standard PVC” denotes the interconnection of ports on the same frame relay switch.

Subtending End Office of an Access Tandem

The term "Subtending End Office of an Access Tandem" denotes an end office that has final trunk group routing through that tandem.

Super Intermediate Hub

The term “ Super Intermediate Hub” denotes a wire center at which bridging or multiplexing functions are performed for Customers served by all wire centers in the LATA. A Super Intermediate Hub can be restricted to one or more designated NPAs within a LATA and/or to wire centers that are owned by the same telephone company as the hub. Super Intermediate Hubs and the wire centers they serve are identified in National Exchange Carrier Association, Inc. Tariff F.C.C. No. 4.

Synchronous Optical Network (SONET)

The term “SONET” denotes a North American Standard for high speed synchronous optical channels having minimum transmission rates of 51.84 Mbps. The standard SONET optical carrier rate of 51.84 Mbps. is called OC1; the equivalent electrical signal rate is called STS-1. SONET standardizes higher transmission bit rates, “OCN”, as exact multiples of OC1 (N X 51.84 Mbps). For example, OC3 equals 3 X 51.84 Mbps.

Synchronous Test Line

The term “Synchronous Test Line” denotes an arrangement in an end office which performs marginal operational tests of supervisory and ring-tripping functions.

Synchronous Transport Signal (STS)

The term “Synchronous Transport Signal” denotes a 51.84 Mbps. electrical signal used within the SONET optical carrier network. The signal consists of the information content and the overhead used by SONET. The overhead is used for controlling, framing and maintaining the STS signal so it can be directly connected to other SONET carrier channels. STS signals are in exact multiples of 51.84 Mbps. (STS-1 is 51.84 Mbps., STS-3 is 155.52 Mbps., etc.).

TARIFF BRANCH
RECEIVED
7/17/2006
PUBLIC SERVICE
COMMISSION
OF KENTUCKY

INTRASTATE ACCESS SERVICES TARIFF

2. General Regulations (Cont'd)

2.6 Definitions (Cont'd)

Tandem Switched Transport

The term "Tandem Switched Transport" denotes transport from the serving wire center to the end office, or from the tandem to the end office, that is switched at a tandem.

Terminating Direction

The term " Terminating Direction" denotes the use of Access Service for the completion of calls from an IC premises to an End User Premises.

Terminus Hub

The term "Terminus Hub" denotes a wire center at which bridging or multiplexing functions are performed only for Customers served directly by the same wire center.

Throughput

The term "Throughput" denotes the number of data bits successfully transferred in one direction per unit of time.

Transmission Measuring (105 Type) Test Line/Responder

The term "Transmission Measuring (105 Type) Test Line/Responder" denotes an arrangement in an end office which provides far-end access to a responder and permits two-way loss and noise measurements to be made on trunks from a near end office.

TARIFF BRANCH
RECEIVED
7/17/2006
PUBLIC SERVICE
COMMISSION
OF KENTUCKY

INTRASTATE ACCESS SERVICES TARIFF

2. General Regulations (Cont'd)

2.6 Definitions (Cont'd)

Synchronous Test Line

The term "Synchronous Test Line" denotes an arrangement in an end office which performs marginal operational tests of supervisory and ring-tripping functions.

Tandem-Switched Transport

The term "Tandem-Switched Transport" denotes transport from the serving wire center to the end office, or from the tandem to the end office, that is switched at a tandem.

Terminating Direction

The term "Terminating Direction" denotes the use of Access Service for the completion of calls from an IC premises to an End User Premises.

Terminus Hub

A wire center at which bridging or multiplexing functions are performed only for Customers served directly by the same wire center.

Transmission Measuring (105 Type) Test Line/Responder

The term "Transmission Measuring (105 Type) Test Line/Responder" denotes an arrangement in an end office which provides far-end access to a responder and permits two-way loss and noise measurements to be made on trunks from a near end office.

Transmission Path

The term "Transmission Path" denotes an electrical path capable of transmitting signals within the range of the service offering, e.g., a voice grade transmission path is capable of transmitting voice frequencies within the approximate range of 300 to 3000 Hz. A transmission path is comprised of physical or derived facilities consisting of any form or configuration of plant typically used in the telecommunications industry.

Trunk

The term "Trunk" denotes a communications path connecting two switching systems in a network, used in the establishment of an end-to-end connection.

TARIFF BRANCH
RECEIVED
7/17/2006
PUBLIC SERVICE
COMMISSION
OF KENTUCKY

INTRASTATE ACCESS SERVICES TARIFF

2. General Regulations (Cont'd)

2.6 Definitions (Cont'd)

Trunk Group

The term "Trunk Group" denotes a set of trunks which are traffic engineered as a unit for the establishment of connections between switching systems in which all of the communications paths are interchangeable.

Trunk Side Connection

The term "Trunk Side Connection" denotes the connection of a transmission path to the trunk side of a local exchange switching system.

Two-Wire to Four-Wire Conversion

The term "Two-Wire to Four-Wire Conversion" denotes an arrangement which converts a four-wire transmission path to a two-wire transmission path to allow a four-wire facility to terminate in a two-wire entity (e.g., a central office switch).

V and H Coordinates Method

The term "V and H Coordinates Method" denotes a method of computing airline miles between two points by utilizing an established formula which is based on the vertical and horizontal coordinates of the two points.

WATS Serving Office

The term "WATS Serving Office" denotes a Telephone Company designated serving wire center where switching, screening and/or recording functions are performed in connection with the closed-end of WATS or WATS-type services.

Wireless Switching Center

The term “Wireless Switching Center” (WSC) denotes a Wireless Service Provider (WSP) switching system that is used to terminate wireless stations for purposes of interconnection to each other and to trunks interfacing with the public switched network.

Wire Center

The term "Wire Center" denotes a building in which one or more central offices, used for the provision of Telephone Exchange Services, are located.

TARIFF BRANCH
RECEIVED
7/17/2006
PUBLIC SERVICE
COMMISSION
OF KENTUCKY

INTRASTATE ACCESS SERVICES TARIFF

3. Carrier Common Line Access Service

The Telephone Company will provide Carrier Common Line Access Service (Carrier Common Line Access) to customers in conjunction with Switched Access Service provided in Section 6 of this tariff.

3.1 General Description

Carrier Common Line Access provides for the use of end users' Telephone Company provided common lines by customers for access to such end users to furnish Intrastate Communications.

Premium Access is all Switched Access Service excluding originating FGA and FGB Switched Access Service provided in an end office not yet converted to equal access to customers that do not furnish intrastate MTS/WATS. Premium Access includes FGA Switched Access Service utilized in the provision of Foreign Exchange Service.

Non-Premium Access is originating FGA and FGB Switched Access Service provided in an end office not yet converted to equal access to customers that do not furnish intrastate MTS/WATS.

A Special Access Surcharge, as set forth in 17.3.1 following, will apply to intrastate special access service provided by the Telephone Company to a customer, in accordance with regulations as set forth in 7.3 following.

3.2 Limitations

3.2.1 Exclusions

Neither a telephone number nor detail billing are provided with Carrier Common Line Access. Additionally, directory listings and intercept arrangements are not included in the rates and charges for Carrier Common Line Access.

3.2.2 Access Groups

All line side connections provided in the same access group will be limited to the same features and operating characteristics.

All trunk side connections provided in the same access group will be limited to the same features and operating characteristics.

TARIFF BRANCH
RECEIVED
7/17/2006
PUBLIC SERVICE
COMMISSION
OF KENTUCKY

INTRASTATE ACCESS SERVICES TARIFF

3. Carrier Common Line Access Service (Cont'd)

3.2 Limitations (Cont'd)

3.2.3 WATS Access Lines

Where Switched Access Services are connected with Special Access Services at Telephone Company Designated WATS Serving Offices for the provision of WATS-type Services, Switched Access Service minutes which are carried on that end of the service (i.e., originating minutes for outward WATS-type services and terminating minutes for inward WATS-type services) shall not be assessed Carrier Common Line Access per minute charges with the following exception. Carrier Common Line Access per minute charges shall apply when Feature Group A or Feature Group B switched access is ordered from a non equal access telephone company office that does not have measurement capabilities and the assumed average access minutes, as set forth in the exchange carrier's access tariff are used.

3.3 Undertaking of the Telephone Company

3.3.1 Provision of Service

Where the customer is provided with Switched Access Service under other sections of this tariff, the Telephone Company will provide the use of Telephone Company common lines by the customer for access to end users at charges as set forth in 17.1.1 and 17.1.2 following.

3.3.2 Interstate and Intrastate Use

The Switched Access Service provided by the Telephone Company includes the Switched Access Service provided for both interstate and intrastate communications. The Carrier Common Line Access charges as set forth in 17.1.1 and 17.1.2 following apply in accordance with the regulations as set forth in 3.8.4 following.

3.4 Obligations of the Customer

3.4.1 Switched Access Service Requirement

The Switched Access Service associated with Carrier Common Line Access shall be ordered by the customer under other sections of this tariff.

3.4.2 Supervision

The customer facilities at the premises of ordering customer shall provide the necessary on-hook and off-hook supervision.

TARIFF BRANCH
RECEIVED
7/17/2006
PUBLIC SERVICE
COMMISSION
OF KENTUCKY

INTRASTATE ACCESS SERVICES TARIFF

3. Carrier Common Line Access Service (Cont'd)

3.5 Determination of Usage Subject to Carrier Common Line Access Charges

Except as set forth herein, all Switched Access Service provided to the customer will be subject to Carrier Common Line Access charges.

3.5.1 Determination of Jurisdiction

When the customer reports interstate and intrastate use of Switched Access Service, the associated Carrier Common Line Access used by the customer for intrastate will be determined as set forth in 3.8.4 following.

3.5.2 Cases Involving Usage Recording By the Customer

Where Feature Group C end office switching is provided without Telephone Company recording and the customer records minutes of use used to determine Carrier Common Line Access charges (i.e., Feature Group C operator and calls such as pay telephone sent-paid, operator-DDD, operator-person, collect, credit-card, third number and/or other like calls), the customer shall furnish such minutes of use detail to the Telephone Company in a timely manner. If the customer does not furnish the data, the customer shall identify all Switched Access Services which could carry such calls in order for the Telephone Company to accumulate the minutes of use through the use of special Telephone Company measuring and recording equipment.

3.5.3 Local Exchange Access and Enhanced Service Exemption

When access to the local exchange is required to provide a customer service (e.g., MTS/WATS-type, telex, Data, etc.) that uses a resold Special Access service, Switched Access Service Rates and Regulations, as set forth in Section 6. following will apply, except when such access to the local exchange is required for the provision of an enhanced service. Carrier Common Line Access charges as set forth in 17.1.1 following apply in accordance with the resale rate regulations as set forth in 3.6.4. following.

TARIFF BRANCH
RECEIVED
7/17/2006
PUBLIC SERVICE
COMMISSION
OF KENTUCKY

INTRASTATE ACCESS SERVICES TARIFF

3. Carrier Common Line Access Service (Cont'd)

3.6 Resold Services

3.6.1 Scope

Where the customer is reselling MTS and/or MTS-type service(s) on which the Carrier Common Line and Switched Access Charges have been assessed, the customer may, at the option of the customer, obtain Feature Group A, Feature Group B or Feature Group D Switched Access Service under this tariff as set forth in Section 6 following for originating and/or terminating access in the local exchange. Such access group arrangements whether single lines or trunks or multiline hunt groups or trunk groups will have Carrier Common Line Access Charges applied as set forth in the Intrastate Carrier Common Line Service Pool Tariff in accordance with the resale rate regulations set forth in 3.6.4. following. For purposes of administering this provision:

Resold intrastate terminating MTS and MTS-type service(s) shall include collect calls, third number calls and credit card calls where the reseller pays the underlying carrier's service charges; and shall not include interstate minutes of use.

Resold intrastate originating MTS and MTS-type service(s) shall not include collect, third number, credit card or interstate minutes of use.

3.6.2 Customer Obligations Concerning the Resale of MTS and MTS-type Services

When the customer is reselling MTS and/or MTS-type service as set forth in 3.6.1 preceding, the customer will be charged Carrier Common Line Access charges in accordance with the resale rate regulations as set forth in 3.6.4 following if the customer or the provider of the MTS service furnishes documentation of the MTS usage and/or the customer furnishes documentation of the MTS-type usage. Such documentation supplied by the customer shall be supplied each month and shall identify the involved resold MTS and/or MTS-type services.

The monthly period used to determine the minutes of use for resold MTS and/or MTS-type service(s) shall be the most recent monthly period for which the customer has received a bill for such resold service(s). This information shall be delivered to the Telephone Company, at a location specified by the telephone company, no later than 15 days after the bill date shown on the resold MTS and/or MTS and/or MTS-type service bill. If the required information is not received by the Telephone Company, the previously reported information, as described preceding, will be used for the next two months. For any subsequent month, no allocation or credit will be made until the required documentation is delivered to the Telephone Company by the customer.

TARIFF BRANCH
RECEIVED
7/17/2006
PUBLIC SERVICE
COMMISSION
OF KENTUCKY

INTRASTATE ACCESS SERVICES TARIFF

3. Carrier Common Line Access Service (Cont'd)

3.6 Resold Services (Cont'd)

3.6.3 Resale Documentation Provided By the Customer

When the customer utilizes Switched Access Service as set forth in 3.6.2 preceding, the Telephone Company may request a certified copy of the customer's resold MTS or MTS-type usage billing from either the customer or the provider of the MTS or MTS-type Service. Requests for billing will relate back no more than 12 months prior to the current billing period.

3.6.4 Rate Regulations Concerning the Resale of MTS-Type Services

When the customer is provided an access group to be used in conjunction with the resale of MTS and/or MTS-type services as set forth in 3.6.1 preceding, subject to the limitations as set forth in 3.2 preceding, and the billing entity receives the usage information required as set forth in 3.6.2 preceding, to calculate the adjustment of Carrier Common Line Access charges, the customer will be billed as set forth in (D), (E) or (F) following, depending upon, respectively, whether the usage is from non-equal access offices, equal access offices or a combination of the two.

(A) Apportionment and Adjustment of Resold Minutes of Use

When the customer is provided with more than one access group in a LATA in association with the resale of MTS and/or MTS-type services, the resold minutes of use will be apportioned as follows:

(1) Originating Services

The Telephone Company will apportion the resold originating MTS and/or MTS-type services and originating minutes of use for which the resale credit adjustment applies, among the access groups. Such apportionment will be based on the relationship of the originating usage for each access group to the total originating usage for all access groups in the LATA. For purposes of administering this provision:

Resold originating MTS and/or MTS-type services minutes shall be only those attributable to intrastate intraLATA originating MTS and/or MTS-type minutes and shall not include collect, third number, credit card or interstate minutes of use.

The resale credit adjustment shall apply for resold originating MTS and MTS-type services and minutes of use, provided Carrier Common Line and Switched Access Charges have been assessed on such services.

TARIFF BRANCH
RECEIVED
7/17/2006
PUBLIC SERVICE
COMMISSION
OF KENTUCKY

INTRASTATE ACCESS SERVICES TARIFF

3. Carrier Common Line Access Service (Cont'd)

3.6 Resold Services (Cont'd)

3.6.4 Rate Regulations Concerning the Resale of MTS-Type Services (Cont'd)

(A) Apportionment and Adjustment of Resold Minutes of Use (Cont'd)

(2) Terminating Services

The Telephone Company will apportion the resold terminating MTS and/or MTS-type services and terminating minutes of use for which the resale credit adjustment applies, among the access groups. Such apportionment will be based on the relationship of the terminating usage for each access group to the total terminating usage for all access groups in the LATA. For purposes of administering this provision:

Resold terminating MTS and/or MTS-type services minutes shall be only those attributable to intrastate intraLATA terminating MTS/MTS-type (i.e., collect calls, third number calls, and credit card calls) and shall not include interstate minutes of use or MTS/MTS-type minutes of use paid for by another party.

The resale credit adjustment shall apply for resold terminating MTS and MTS-type services and minutes of use, provided Carrier Common Line and Switched Access Charges have been assessed on such services.

(B) Same State/Telephone Company/Exchange Limitation

In order for the rate regulations to apply as set forth in (D), (E) or (F) following, the access groups and the resold MTS and/or MTS-type services must be provided in the same state (except when the same extended area service arrangement is provided in two different states by the same telephone company) in the same exchange, provided by the same Telephone Company and connected directly or indirectly. For those exchanges that encompass more than one state, the customer shall report the information by state within the exchange.

TARIFF BRANCH
RECEIVED
7/17/2006
PUBLIC SERVICE
COMMISSION
OF KENTUCKY

INTRASTATE ACCESS SERVICES TARIFF

3. Carrier Common Line Access Service (Cont'd)

3.6 Resold Services (Cont'd)

3.6.4 Rate Regulations Concerning the Resale of MTS-Type Services (Cont'd)

(C) Direct and Indirect Connections

Each of the access group arrangements used by the customer in association with the resold MTS and/or MTS-type services must be connected either directly or indirectly to the customer designated premises at which the resold MTS and/or MTS-type services are terminated. Direct connections are those arrangements where the access groups and resold MTS and/or MTS-type services are terminated at the same customer designated premises.

Indirect originating connections are those arrangements where the access groups and the resold originating MTS and/or MTS-type services are physically located at different customer designated premises in the same exchange. Such different customer designated premises are connected by facilities that permit a call to flow from access groups to resold MTS and/or MTS-type services.

Indirect terminating connections are those arrangements where the access groups and resold terminating MTS and/or MTS-type services are physically located at different customer designated premises in the same exchange. Such different customer designated premises are connected by facilities that permit a call to flow from resold terminating MTS and/or MTS-type services to access groups.

(D) Access Groups - Non Equal Access Offices Only

The adjustments as set forth here and in (E) and (F) following will be computed separately for each access group.

When all the usage on an access group originates from and/or terminates at end offices that have not been converted to equal access, the Non Premium Access Charge per minute will apply to all originating usage and the Premium Access Charge per minute will apply to all terminating usage as set forth in Section 17.1.1 following. The Access Minutes which will be subject to Carrier Common Line Access charges will be the adjusted originating intrastate access minutes plus the adjusted terminating intrastate access minutes for such access groups.

The adjusted originating access minutes will be the originating intrastate access minutes less the reported resold originating MTS and/or MTS-type service minutes of use as set forth (A)(1) preceding; but not less than zero. The adjusted terminating access minutes will be the terminating intrastate access minutes less the reported resold terminating MTS and/or MTS-type service minutes of use as set forth in (A)(2) preceding; but not less than zero.

TARIFF BRANCH
RECEIVED
7/17/2006
PUBLIC SERVICE
COMMISSION
OF KENTUCKY

INTRASTATE ACCESS SERVICES TARIFF

3. Carrier Common Line Access Service (Cont'd)

3.6 Resold Services (Cont'd)

3.6.4 Rate Regulations Concerning the Resale of MTS-Type Services (Cont'd)

(E) Access Groups - Equal Access Offices Only

When all the usage on an access group originates from and/or terminates at end offices that have been converted to equal access, the Premium Access Charge per minute as set forth in 17.1.1 following will apply. The minutes billed Carrier Common Line Access Service charges will be the adjusted originating intrastate access minutes and the adjusted terminating intrastate access minutes for such access groups.

The adjusted originating access minutes will be the originating intrastate access minutes less the reported resold originating MTS and/or MTS-type service minutes of use as set forth in (A)(1) preceding; but not less than zero. The adjusted terminating access minutes will be the terminating intrastate access minutes less the reported resold terminating MTS and/or MTS-type service minutes of use as set forth in (A)(2) preceding; but not less than zero.

(F) Access Groups - Non-Equal Access and Equal Access Offices

When an access group has usage that originates from and/or terminates at both end offices that have been converted to equal access and end offices that have not been converted, the Premium Access Charge per minute will apply to all terminating usage and to originating usage from equal access end offices and the Non-Premium Access Charge per minute will apply to originating usage from end offices that have not been converted to equal access, as set forth in Section 17.1.1 following. The minutes billed Carrier Common Line Access Service charges will be the adjusted originating intrastate access minutes plus the adjusted terminating intrastate access minutes for such access groups.

The adjusted originating access minutes will be the originating intrastate access minutes less the reported resold originating MTS and/or MTS-type service minutes of use as set forth in (A)(1) preceding; but not less than zero. The adjusted terminating access minutes will be the terminating intrastate access minutes less the reported resold terminating MTS and/or MTS-type service minutes of use as set forth in (A)(2) preceding; but not less than zero.

TARIFF BRANCH
RECEIVED
7/17/2006
PUBLIC SERVICE
COMMISSION
OF KENTUCKY

INTRASTATE ACCESS SERVICES TARIFF

3. Carrier Common Line Access Service (Cont'd)

3.6 Resold Services (Cont'd)

3.6.4 Rate Regulations Concerning the Resale of MTS and MTS-Type Services (Cont'd)

(F) Access Groups - Non-Equal Access and Equal Access Offices (Cont'd)

The adjusted originating access minutes will be apportioned between premium and non premium access minutes using end-office specific usage data when available, or when usage data are not available, the premium and non premium ratios developed as set forth in 6.4.1(C)(4) following. The Premium and Non Premium per minute charges set forth in 17.1.1 following will apply to the respective premium and non premium access minutes determined in this manner.

(G) When the Adjustment Will Be Applied to Customer Bills

The adjustment as set forth in (D), (E) and (F) preceding will be made to the involved customer account no later than either the next bill date, or the one subsequent to that, depending on when the usage report is obtained.

(H) Conversion of Billed Usage to Minutes

When the MTS and/or MTS-type usage is shown in hours, the number of hours shall be multiplied by 60 to develop the associated MTS and/or MTS-type minutes of use. If the MTS and/or MTS-type usage is shown in a unit that does not show hours or minutes, the customer shall provide a factor to convert the shown units to minutes.

(I) Percent Interstate Use (PIU)

The adjustment as set forth in (D), (E) and (F) preceding will be made to the involved customer account after making the adjustments to the customer account as set forth in 3.8.4 following.

TARIFF BRANCH
RECEIVED
7/17/2006
PUBLIC SERVICE
COMMISSION
OF KENTUCKY

INTRASTATE ACCESS SERVICES TARIFF

3. Carrier Common Line Access Service (Cont'd)

3.7 Coin Services

3.7.1 Collection and Remittance of Coin Station Monies

When the customer is provided Operator Trunk-Coin or Combined Coin and Non-Coin or Operator Trunk-Full Feature Optional Features for sent-paid pay telephone access as set forth in Section 6. following, the Telephone Company will collect sent-paid monies from pay telephone stations and will remit monies to the customer as set forth in 3.7.3 following. The Telephone Company will provide message call detail format and bill periods used to determine the monies upon request from the customer.

3.7.2 Provision of Message Call Detail Concerning Coin Station Monies

Where Operator Trunk-Coin or Combined Coin and Non-Coin or Operator Trunk-Full Feature Optional Features for sent-paid pay telephone access is provided to the customer and the customer wishes to receive the monies it is due for the monies collected by the Telephone Company from coin pay telephone stations, the customer shall furnish to the Telephone Company, at a location specified by the Telephone Company, the customer message call detail for the customer sent-paid (coin) pay telephone calls in accordance with the Telephone Company collection schedule. The customer message call detail furnished shall be in a standard format established by the Telephone Company. The Telephone Company will provide to the customer the precise details of the required standard format. If, in the course of Telephone Company business, it is necessary to change the standard format, the Telephone Company will provide notification to the involved customer six months prior to the change. If no customer message call detail is received from the customer for each bill period established by the Telephone Company, the Telephone Company will assume there were no customer sent-paid (coin) pay telephone calls for the period. In addition, the customer shall furnish a schedule of its charges for sent-paid (coin) calls to the Telephone Company at a location and date as specified by the Telephone Company. Any change in the customer's schedule of charges shall be furnished to the Telephone Company one day after the change becomes effective.

TARIFF BRANCH
RECEIVED
7/17/2006
PUBLIC SERVICE
COMMISSION
OF KENTUCKY

INTRASTATE ACCESS SERVICES TARIFF

3. Carrier Common Line Access Service (Cont'd)

3.7 Coin Services (Cont'd)

3.7.3 Payment of Coin Sent-Paid Monies

The Telephone Company will collect the monies from coin pay telephone stations and will determine and remit amounts due to an customer which is provided Operator Trunk-Coin or Combined Coin and Non-Coin or Operator Trunk-Full Feature Optional Features for sent-paid pay telephone access as set forth in Section 6 as follows:

(A) Bill Period Coin Revenue

The Telephone Company will establish a collection schedule for each coin pay telephone station and will collect the monies from the coin pay stations based on this collection schedule. The monies collected based on this schedule during each bill period established by the Telephone Company will be identified by coin pay telephone station and summed to develop the Bill Period Coin Revenue for each coin record day (i.e., the day a record is prepared and dated to show the amount due the customer).

(B) Total Customer Coin Revenue

The intrastate Total Customer Coin Revenue will be determined by the Telephone Company based on the customer message call detail received from the customer for each bill period and the customer's schedule of charges for sent-paid coin calls. Such Total Customer Coin Revenue will be developed each coin record day.

(C) Recourse Adjustments

For each coin record day, the Telephone Company will subtract from the Total Customer Coin Revenue an amount for coin station shortages. Coin station shortages are amounts resulting from unauthorized calling at coin pay telephone stations, use of unauthorized coins (i.e., foreign coins, slugs and improper use of U.S. pennies), unauthorized removal of coins from coin pay telephone stations and coin refunds beyond the Telephone Company's control. Such amount for coin station shortages will be developed by the Telephone Company by multiplying the Total Customer Coin Revenue for each coin record day by a shortage factor. Such amount will be rounded to the nearest penny. The shortage factor will be determined by dividing the yearly total coin shortage amount by the yearly total coin revenue amount (i.e. total coin revenue equals the coin revenue due under exchange tariffs, state toll tariffs, and interstate toll tariffs). The total coin shortage amount and the total revenue amount will be determined by the Telephone Company through an annual special study.

TARIFF BRANCH
RECEIVED
7/17/2006
PUBLIC SERVICE
COMMISSION
OF KENTUCKY

INTRASTATE ACCESS SERVICES TARIFF

3. Carrier Common Line Access Service (Cont'd)

3.7 Coin Services (Cont'd)

3.7.3 Payment of Coin Sent-Paid Monies (Cont'd)

(D) Payment of Net Customer Coin Revenue

The Telephone Company will determine the Net Customer Coin Revenue for each coin record day by subtracting from the Total Customer Coin Revenue determined as set forth in (B) preceding the amount for coin station shortages determined as set forth in (C) preceding. On the date (payment date) determined by adding 45 days to the coin record day, the Telephone Company will remit payment to the Customer for the Net Customer Coin Revenue.

(E) Audit Provisions

Upon reasonable written notice by the customer to the Telephone Company, the customer shall have the right through its authorized representative to examine and audit, during normal business hours and at reasonable intervals as determined by the Telephone Company, all such records and accounts as may under recognized accounting practices contain information bearing upon the determination of the amount payable to the customer. Adjustment shall be made by the proper party to compensate for any errors or omissions disclosed by such examination or audit. Neither such right to examine and audit nor the right to receive such adjustment shall be affected by any statement to the contrary, appearing on checks or otherwise, unless such statement expressly waiving such right appears in a letter signed by the authorized representative of the party having such right and delivered to the other party.

All information received or reviewed by the customer or its authorized representative is to be considered confidential and is not to be distributed, provided or disclosed in any form to anyone not involved in the audit, nor is such information to be used for any other purpose.

TARIFF BRANCH
RECEIVED
7/17/2006
PUBLIC SERVICE
COMMISSION
OF KENTUCKY

INTRASTATE ACCESS SERVICES TARIFF

3. **Carrier Common Line Access Service (Cont'd)**

3.8 **Rate Regulations**

3.8.1 **Billing of Charges**

Carrier Common Line Access Service Charges will be billed to each Switched Access Service provided under this tariff in accordance with the regulations as set forth in 3.8.5 following except as set forth in 3.6.4 preceding and 3.8.4 following.

3.8.2 **Measuring and Recording of Call Detail**

When access minutes are used to determine the usage sensitive Carrier Common Line Access Service Charges, they will be accumulated using call detail recorded by Telephone Company equipment except as set forth in 3.8.3 following. The Telephone Company measuring and recording equipment, except as set forth in 3.8.3 following, will be associated with end office or local tandem switching equipment and will record each originating and terminating access minute where answer supervision is received. The accumulated access minutes will be summed on a line by line basis, by line group or by end office, whichever type of account is used by the Telephone Company, for each customer and then rounded to the nearest minute.

3.8.3 **Unmeasured Feature Group A and B Usage**

When Carrier Common Line Access is provided in association with Feature Group A or Feature Group B Switched Access Service in Telephone Company offices that are not equipped for measurement capabilities, assumed average intrastate access minutes will be used to determine the usage sensitive Carrier Common Line Access Service Charges. These assumed access minutes are as set forth in Section 6.5.4 following.

3.8.4 **Percent Intrastate Use (PIU)**

When the customer reports interstate and intrastate use of in-service Switched Access Service, Carrier Common Line Access Charges will be billed only to intrastate Switched Access Service access minutes based on the data reported by the customer as set forth in Section 2.3.11 preceding, except where the Telephone Company is billing according to actuals by jurisdiction. Intrastate Switched Access Service access minutes will, after adjustment as set forth in Section 3.6.4 preceding, when necessary, be used to determine Carrier Common Line Charges as set forth in Section 3.8.5 following.

TARIFF BRANCH
RECEIVED
7/17/2006
PUBLIC SERVICE
COMMISSION
OF KENTUCKY

INTRASTATE ACCESS SERVICES TARIFF

3. Carrier Common Line Access Service (Cont'd)

3.8 Rate Regulations (Cont'd)

3.8.5 Determination of Premium and Non-Premium Charges

After the adjustments as set forth in 3.6.4 and 3.8.4 preceding have been applied, when necessary, to Switched Access Service access minutes, charges for the involved customer account will be determined as follows:

(A) Access minutes for all premium rated Switched Access Service subject to Carrier Common Line charges will be multiplied by the Premium Access per minute rate as set forth in Section 17.1.1 following.

(B) Access minutes for all non-premium rated Switched Access Service subject to Carrier Common Line charges will be multiplied by the Non-Premium Access per minute rate as set forth in 17.1.1 following.

(C) Access minutes for all FGB Access Services with an Abbreviated Dialing Arrangement (ADA) subject to Carrier Common Line Charges will be multiplied by the Premium Access per minute rate as set forth in 17.1.1 following. The result is then multiplied by the ADA rate factor as set forth in Section 17.2.4 following.

(D) Carrier Common Line Charges shall not be reduced as set forth in 3.6.1 preceding unless Switched Access Charges, as set forth in Section 6 following, are applied to the customer's Switched Access Services.

(E) Terminating Premium Access or Non-Premium Access, per minute charge(s) apply to:

- all terminating access minutes of use;
- less those terminating access minutes of use associated with Mobile Telephone Switching Offices (MTSOs).
- all originating access minutes of use associated with FGA Access Services where the off-hook supervisory signaling is forwarded by the customer's equipment when the called party answers;
- all originating access minutes of use associated with calls placed to 700, 800 series and 900 numbers, less those originating access minutes of use associated with calls placed to 700, 800 series and 900 numbers for which the customer furnishes for each month a report of either the number of calls or minutes or a report of the percent of calls or minutes that terminate in a Switched Access Service that is assessed Carrier Common Line charges.

TARIFF BRANCH
RECEIVED
7/17/2006
PUBLIC SERVICE
COMMISSION
OF KENTUCKY

3. Carrier Common Line Access Service (Cont'd)

3.8 Rate Regulations (Cont'd)

3.8.5 Determination of Premium and Non-Premium Charges (Cont'd)

(E) (Cont'd)

When the customer makes this report available to the Telephone Company in advance of billing, these minutes of use will be charged on the current bill as originating minutes of use as set forth in (F) following. If a billing dispute arises concerning the customer provided report, the Telephone Company will request the customer to provide the data the customer used to develop the report. The Telephone Company will not request such data more than once a year. The customer shall supply the data within 30 days of the Telephone Company request.

When this report is not available to the Telephone Company until after billing, it shall be used by the Telephone Company to calculate and post a credit to the customer's account. The credit shall be posted to the customer's account within 30 days of receipt of the report. The credit shall be calculated by multiplying the number of access minutes of use, for which a credit is determined to be applicable, times the difference between the terminating and originating Carrier Common Line charges in effect when the calls were completed.

(F) The originating Premium Access or Non-Premium Access, per minute charge(s) apply to:

- all originating access minutes of use;
- less those originating access minutes of use associated with FGA Access Services where the off-hook supervisory signaling is forwarded by the customer's equipment when the called party answers;
- less all originating access minutes of use associated with calls placed to 700, 800 and 900 numbers;
- less those terminating access minutes of use associated with Mobile Telephone Switching Offices (MTSOs).
- plus all originating access minutes of use associated with calls placed to 700, 800 series and 900 numbers for which the customer furnishes for each month a report of either the number of calls or minutes or a report of the percent of calls or minutes that terminate in a Switched Access Service that is assessed Carrier Common Line charges, and for which a corresponding reduction in the number of terminating access minutes of use has been made as set forth in (E) preceding.

TARIFF BRANCH
RECEIVED
7/17/2006
PUBLIC SERVICE
COMMISSION
OF KENTUCKY

INTRASTATE ACCESS SERVICES TARIFF

3. Carrier Common Line Access Service (Cont'd)

3.9 Non-Traffic Sensitive Revenue Charge

All customers of the Telephone Company's Switched Access Services provided in Section 6, excluding Feature Group A Access Service provided to end users for intraLATA Foreign (FX) service, will be subject to a Non-Traffic Sensitive Revenue (NTSR) charge.

3.9.1 General Description

The NTSR charge is developed from the Telephone Company's Non-Traffic Sensitive (NTS) Revenue Requirement per access line per month, as set forth in Section 17.1.2 following.

The NTSR charge will apply to all intrastate interLATA and intrastate intraLATA terminating minutes of use for all customers. For the purpose of determining the NTSR charge, terminating minutes are defined to be those minutes to which the terminating carrier common line rate would be applied as indicated in Sections 3.2.3 and 3.8.5(E) preceding. These minutes will be referred to as terminating rated access minutes in this section.

The NTSR charge will not be reduced by the MTS and MTS-type resale credits described in Section 3.6 preceding.

3.9.2 Determination of Monthly NTS Revenue Requirement

During 1991, the Telephone Company will determine its monthly NTS Revenue Requirement by multiplying the NTS Revenue Requirement per access line per month rate, as set forth in Section 17.1.2 following, by the number of Telephone Company access lines in service on June 30, 1999.

For each subsequent calendar year, the Telephone Company will determine its monthly NTS Revenue Requirement by multiplying the NTS Revenue Requirement per access line per month rate, as set forth in Section 17.1.2 following, by the number of Telephone Company access lines in service on December 31st of the previous year.

The access lines used in the calculation shall be the same access lines reported by the Telephone Company to the National Exchange Carriers Association.

If the number of access lines decreases during subsequent years, the monthly NTS Revenue Requirement shall not decrease below from the prior period revenue requirement.

TARIFF BRANCH
RECEIVED
7/17/2006
PUBLIC SERVICE
COMMISSION
OF KENTUCKY

INTRASTATE ACCESS SERVICES TARIFF

3. Carrier Common Line Access Service (Cont'd)

3.9 Non-Traffic Sensitive Revenue Charge (Cont'd)

3.9.3 Billing of the NTSR Charge

The Telephone Company may select one of the billing methods, as set forth in (A) and (B) following, to calculate the monthly NTSR charge applicable to each customer. The Telephone Company will notify the customer which of the billing methods will be used.

(A) Percent Distribution Method

The Telephone Company will determine each customer's monthly intrastate terminating rated access minutes, as set forth in Section 3.9.1 preceding. The sum of all customers' monthly intrastate terminating rated access minutes will be used by the Telephone Company to determine the percent distribution for each customer.

The monthly NTSR charge for each customer will be determined by multiplying the Telephone Company's monthly NTS Revenue Requirement by the customer's percent distribution, as calculated above.

(B) Per Minute Rate Method

The Telephone Company will develop an NTSR rate per terminating rated access minute by dividing its annual NTS Revenue Requirement by the total terminating rated access minutes for all customers. The total terminating rated access minutes for all customers shall be either the previous year's historical total or a Telephone Company forecasted total.

The monthly NTSR charge for each customer will be determined by multiplying the NTSR rate per terminating rated access minute, developed above, by each customer's monthly terminating rated access minutes as set forth in Section 3.9.1 preceding.

To facilitate the billing of the monthly NTSR charge, the Telephone Company may, at its option combine with the NTSR rate per terminating rated access minute the terminating Carrier Common Line rate set forth in Section 17.1.1, in its billing system. The Telephone Company may exercise this option only when using the Per Minute Rate Method.

This billing method will requires the Telephone Company to perform a true-up calculation for each customer on an annual basis. The sum of all customers' actual annual intrastate terminating rated access minutes will be used by the Telephone Company to determine the annual percent distribution for each customer.

The annual total of the monthly NTSR billing to each customer will be adjusted to an amount that is equal to the Telephone Company's annual NTS Revenue Requirement multiplied by the customer's annual percent distribution.

TARIFF BRANCH
RECEIVED
7/17/2006
PUBLIC SERVICE
COMMISSION
OF KENTUCKY

INTRASTATE ACCESS SERVICES TARIFF

4. Reserved

This section is reserved for future use.

TARIFF BRANCH
RECEIVED
7/17/2006
PUBLIC SERVICE
COMMISSION
OF KENTUCKY

INTRASTATE ACCESS SERVICES TARIFF

5. Access Ordering

5.1 General

This section sets forth the regulations and order related charges for services set forth in other sections of this tariff. Order related charges are in addition to other applicable charges for the services provided.

An Access Order is an order to provide the customer with Switched Access and Special Access or Access Related Service or to provide changes to existing services.

The regulations, rates and charges for special construction are set forth in NATIONAL EXCHANGE CARRIER ASSOCIATION, INC. TARIFF F.C.C. NO. 3 and are in addition to the regulations, rates and charges specified in this section.

A customer may order any number of services of the same type and between the same premises on a single Access Order. All details for services for a particular order must be identical except for those for multipoint service.

The customer shall provide to the Telephone Company the order information required in 5.2 following, and in addition the customer must also provide:

- Customer name and premises address(es).
- Billing name and address (when different from customer name and address).
- Customer contact name(s) and telephone number(s) for the following provisioning activities: order negotiation, order confirmation, interactive design, installation and billing.

TARIFF BRANCH
RECEIVED
7/17/2006
PUBLIC SERVICE
COMMISSION
OF KENTUCKY

INTRASTATE ACCESS SERVICES TARIFF

5. Access Ordering (Cont'd)

5.1 General (Cont'd)

5.1.1 Service Installation

The Telephone Company will provide the Access Service in accordance with the Customer's requested service date, subject to the constraints established by the Telephone Company schedule of applicable service dates.

The Telephone Company shall make available to all customers, upon request, a schedule of applicable service intervals for Switched Access and Special Access Services. The schedule shall specify the applicable service interval for services and the quantities of services that can be provided by a requested service date. Any associated material will be provided upon request and within a reasonable period of time.

The Telephone Company will not accept orders for service dates which exceed the applicable service date by more than six months.

Access Services will be installed during Telephone Company business days. If a customer requests that installation be done outside of scheduled work hours, and the Telephone Company agrees to this request, the customer will be subject to applicable Additional Labor Charges as set forth in 17.4.3(A) following.

When the Telephone Company has identified in NECA Tariff F.C.C. No. 4, Wire Center Information that it has not received a bona fide request for Direct Trunked Transport and a customer subsequently orders Direct Trunked Transport, the Telephone Company will work cooperatively with the customer to provide Direct Trunked Transport within 90 days of receipt of an order.

TARIFF BRANCH
RECEIVED
7/17/2006
PUBLIC SERVICE
COMMISSION
OF KENTUCKY

INTRASTATE ACCESS SERVICES TARIFF

5. **Access Ordering (Cont'd)**

5.1 **General (Cont'd)**

5.1.2 **Expedited Orders**

When placing an Access Order, a customer may request a service date that is prior to the applicable service date. Additionally, a customer may also request an earlier service date on a pending Access Order. In this case, an Access Order modification as set forth in 5.4 following would be required. If the Telephone Company determines that the service can be provided on the requested date and that additional labor cost or extraordinary costs are required to meet the requested service date, the customer will be notified and will be provided with an estimate of the additional charges involved. Charges will be billed at actual cost, not to exceed 10 percent over estimated charges. Such additional charges will be determined and billed to the customer as explained following.

To calculate the additional labor charges, the Telephone Company will, upon authorization from the customer to incur the additional labor charges, keep track of the additional labor hours used to meet the request of the customer and will bill the customer at the applicable Additional Labor charges as set forth in 17.4.3(A) following.

To develop, determine and bill the customer the extraordinary costs which may be involved, the Special Construction terms and conditions as set forth in NATIONAL EXCHANGE CARRIER ASSOCIATION, INC. TARIFF F.C.C. NO. 3 will be used by the Telephone Company. Authorization to incur the costs and to bill the customer will be in accordance with the terms and conditions of NATIONAL EXCHANGE CARRIER ASSOCIATION, INC. TARIFF F.C.C. NO. 3.

When the request for expediting occurs subsequent to the issuance of the Access Order, a Service Date Change Charge as set forth in 17.4.1(B) following also applies.

5.1.3 **Selection of Facilities for Access Orders**

The option to request a specific transmission path or channel is only provided for High Capacity Facilities Special Access, or as provided for under Special Facilities Routing as set forth in Section 11. following.

When there are High Capacity facilities to a hub on order or in service for the customer's use, the customer may request a specific channel or transmission path be used to provide the Switched or Special Access Service requested in an Access Order. The Telephone Company will make a reasonable effort to accommodate the customer request.

TARIFF BRANCH
RECEIVED
7/17/2006
PUBLIC SERVICE
COMMISSION
OF KENTUCKY

INTRASTATE ACCESS SERVICES TARIFF

5. **Access Ordering (Cont'd)**

5.2 **Ordering Requirements**

5.2.1 **Switched Access Service**

When ordering Switched Access service, the customer must specify whether the service is to be provided as (1) Direct Trunked Transport to the end office, (2) Direct Trunked Transport to a tandem which connects with Tandem Switched Transport from the tandem to the end office or (3) Tandem Switched Transport to the end office. When all or a portion of service is ordered as Direct Trunked Transport, the customer must specify the type and quantity of Direct Trunked Transport facility (e.g., Voice Grade or High Capacity DS1 or DS3).

The Customer must also specify the type of Entrance Facility to be used for Switched Access (e.g., Voice grade or High Capacity). For High Capacity Entrance Facilities, the customer must specify the facility assignment and the channel assignment for each trunk.

Direct Trunked Transport is available at all tandems and at all end offices except those end offices identified in NATIONAL EXCHANGE CARRIER ASSOCIATION, INC. TARIFF F.C.C. NO. 4 as not having the capability to provide Direct Trunked Transport. Direct Trunked Transport is not available: (1) from end offices that provide equal access through a Centralized Equal Access arrangement, or (2) from end offices that lack recording or measurement capability.

Normally, Direct Trunked Transport of originating 800 series calls from an end office is available only from Service Switching Point (SSP) equipped end offices. However, certain SSP equipped end offices cannot accommodate the direct trunking of the 888 service access code. These end offices are identified in NATIONAL EXCHANGE CARRIER ASSOCIATION, INC., TARIFF F.C.C. No. 4. Additionally, certain non-SSP equipped end offices can accommodate direct trunking of originating 800 series calls. These end offices are also identified in NATIONAL EXCHANGE CARRIER ASSOCIATION, INC., TARIFF F.C.C. No. 4.

When the customer has both Tandem Switched Transport and Direct Trunked Transport at the same end office, the customer will be provided Alternate Traffic Routing as set forth in 6.4.6 following.

A customer's Local Transport may be connected to the Entrance Facility of another customer, provided the other customer submits a Letter of Authorization for this connection and assumes full responsibility for the cost of the Entrance Facility.

TARIFF BRANCH
RECEIVED
7/17/2006
PUBLIC SERVICE
COMMISSION
OF KENTUCKY

5. Access Ordering (Cont'd)

5.2 Ordering Requirements

5.2.1 Switched Access Service

(A) Feature Group A

Orders for Feature Group A Switched Access Service shall be in lines.

When placing an order for Feature Group A Switched Access Service, the customer shall provide the following information in addition to that set forth in 5.1 preceding:

- The number of lines and the first point of switching (i.e., Dial Tone Office)
- Optional Features
- Whether the Off-hook Supervisory Signaling is provided by the customer's equipment before the called party answers, or is forwarded by the customer's equipment when the called party answers
- Lines to be provided as single lines
- Lines to be arranged in multiline hunt group arrangements
- Directionality (1-way, 2-way, etc.)
- A projected Percentage of Intrastate Use (PIU) as set forth in 2.3.11 preceding
- The Interexchange Carrier to which the service is connected or, in the alternative, specify the means by which the FGA access communications are transported to another LATA.

(B) Feature Group B

Orders for Feature Group B Switched Access Service shall be in trunks.

When placing an order for Feature Group B Service, the customer shall provide, the following information in addition to that set forth in 5.1 preceding:

- The number of trunks
- The end office, except when FGB is provided through a centralized equal access arrangement, when direct routing is desired
- The access tandem office when tandem routing is desired
- Optional Features
- Trunks to be provided as single trunks
- Trunks to be arranged in trunk group arrangements
- Directionality (1-way, 2-way, etc.)
- A projected percentage of intrastate use (PIU) as set forth in 2.3.11 preceding
- The Interexchange Carrier to which the service is connected or, in the alternative, specify the means by which the FGB access communications are transported to another state.

TARIFF BRANCH
RECEIVED
7/17/2006
PUBLIC SERVICE
COMMISSION
OF KENTUCKY

5. Access Ordering (Cont'd)

5.2 Ordering Requirements (Cont'd)

5.2.1 Switched Access Service (Cont'd)

(B) Feature Group B (Cont'd)

- The access code dialing arrangement (i.e., a uniform access code of 950-XXXX or an Abbreviated Dialing Arrangement (ADA) access code of N or NX).
- For Feature Group B switched access service to a Wireless Switching Center (WSC) directly interconnected to a Telephone Company access tandem office, the customer shall provide information to the Telephone Company indicating the NXX code(s) to be accessed.

(C) Feature Group C, Feature Group D and Interim NXX Translation and SS7 Signaling

When placing an order for Feature Group C and D Switched Access Service, the customer shall provide:

- the number of BHMC from the customer designated premises to the end office or Operator Transfer Service Location by Feature Group and by type of BHMC, or
- The number of trunks desired between customer designated premises and an entry switch, or Operator Transfer Service location.
- The number of BHMC or trunks required for or to be converted to an SS7 Signaling capability.
- Optional Features
- Interim NXX Translation options.
- A projected Percentage of Intrastate Use (PIU) as set forth in 2.3.11 preceding.
- For Feature Group D switched access service to a Wireless Switching Center (WSC) directly interconnected to a Telephone Company access tandem office, the customer shall provide information to the Telephone Company indicating the NXX code(s) to be accessed.

When BHMC information is provided it is used to determine the number of transmission paths as set forth in 6.2.5 following.

TARIFF BRANCH
RECEIVED
7/17/2006
PUBLIC SERVICE
COMMISSION
OF KENTUCKY

INTRASTATE ACCESS SERVICES TARIFF

5. Access Ordering (Cont'd)

5.2 Ordering Requirements (Cont'd)

5.2.1 Switched Access Service (Cont'd)

(C) Feature Group C, Feature Group D and Interim NXX Translation and SS7 Signaling (Cont'd)

The BHMC may be determined by the customer in the following manner. For each day (8 am to 11 pm, Monday through Friday, excluding national holidays), the customer shall determine the highest number of minutes of use for a single hour (e.g., 55 minutes in the 10-11 a.m., hour). The customer shall, for the same hour period (i.e., busy hour) for each of twenty consecutive business days, pick the twenty consecutive business days in a calendar year which add up to the largest number of minutes of use. Both originating and terminating minutes shall be included. The customer shall then determine the average busy hour minutes of capacity (i.e., BHMC) by dividing the largest number of minutes of use figure for the same hour period for the consecutive twenty business day period by 20. This computation shall be performed for each end office the customer wishes to serve. These determinations thus establish the forecasted BHMC for each end office.

Customers may, at their option, order FGD by specifying the number of trunks desired between customer designated premises and an end office, access tandem, or operator services location. When ordering by trunk quantities rather than BHMC quantities to an access tandem, the customer must also provide the Telephone Company an estimate of the amount of traffic it will generate to and/or from each end office subtending the access tandem to assist the Telephone Company in its own efforts to project further facility requirements.

When Feature Group C or D is ordered with the Interim NXX Translation optional feature, the customer shall specify the Service Access Code(s) (e.g., 900) and their associated NXX code(s) to be translated within the entire LATA or Market Area. The initial and subsequent orders to add, change, or delete Interim NXX Translation codes shall be placed separately or in combination with orders to change Feature Group C or D Switched Access BHMC or trunks. Customer assigned NXX codes which have not been ordered will be blocked.

Orders for the Interim NXX Translation optional feature shall not be required until such time as a customer other than an MTS/WATS provider requests Interim NXX Translation of Service Access Codes. Upon receipt of such order, the Telephone Company shall notify the MTS/WATS provider of the activation of the Interim NXX Translation Service for the Service Access Code. Following such initial activation, all customers are required to place orders for Interim NXX Translation of the Service Access Code and the Interim NXX Translation charge for the Service Access Code shall apply as set forth in 17.2.1(B) following.

TARIFF BRANCH
RECEIVED
7/17/2006
PUBLIC SERVICE
COMMISSION
OF KENTUCKY

INTRASTATE ACCESS SERVICES TARIFF

5. Access Ordering (Cont'd)

5.2 Ordering Requirements (Cont'd)

5.2.1 Switched Access Service (Cont'd)

(D) SS7 Optional Feature

When Feature Group C or D is ordered with the SS7 optional feature, in addition to information listed in 5.2.1(C) preceding, the customer shall specify a reference to existing signaling connections or reference a related SS7 signaling connection order. When ordering SS7 signaling, the customer shall provide the Signaling Transfer Point codes, location identifier codes and circuit identifier codes. In addition, the customer shall work cooperatively with the Telephone Company to determine the number of SS7 signaling connections required to handle its signaling traffic.

For 800 Data Base Access Service, as described in 6.1.3(A) & (C) following, the customer must order FGC or FGD to those access tandems or end offices designated as Service Switching Points (SSP) for 800 Data base service or to those non-SSP equipped end offices that can accommodate direct trunking of originating 800 calls. SSP equipped end offices that can accommodate direct trunking of originating 800 calls are designated in NATIONAL EXCHANGE CARRIER ASSOCIATION, INC. TARIFF FCC NO. 4, WIRE CENTER INFORMATION. Certain SSP equipped end offices that cannot accommodate direct trunking of originating 888 calls are designated in NATIONAL EXCHANGE CARRIER ASSOCIATION, INC. TARIFF FCC NO. 4, WIRE CENTER INFORMATION. All traffic originating from end offices not equipped to provide SS7 signaling and routing, not able to accommodate direct trunking of originating 800 series calls or equipped with SS7 signaling but not able to accommodate direct trunking of originating 888 calls, require routing via an access tandem where SSP functionality is available.

TARIFF BRANCH
RECEIVED
7/17/2006
PUBLIC SERVICE
COMMISSION
OF KENTUCKY

INTRASTATE ACCESS SERVICES TARIFF

5. **Access Ordering (Cont'd)**

5.2 **Ordering Requirements (Cont'd)**

5.2.2 **Special Access Service**

When placing an order for Special Access Service the customer must specify:

- the customer designated premises or hubs or ADM equipped wire centers involved
- type of service (e.g., Voice Grade, High Capacity, etc.)
- the channel interface(s)
- technical specification package
- options desired
- for multipoint services, the channel interface at each customer designated premises may, at the request of the customer, be different but all such interfaces shall be compatible.
- that the traffic consists of less than ten percent interstate traffic.

All part-time Video and Program Audio services are subject to a service inquiry. A service inquiry is a request to the Telephone Company to determine if facilities exist to provide the service ordered and to determine the service date on which service can be provided to the customer.

Where the Special Access Service is exempt from the Special Access Surcharge, as set forth in 7.3 following the customer shall furnish written certification to that effect as set forth in 7.3.3 following.

When ordering bridging and/or multiplexing, the Customer must specify the telephone company hub(s) from which they desire service. The Customer must specify only those hubs that provide the type of service ordered and interconnect with the wire center(s) from which the customer requires service. The Wire Center section of National Exchange Carrier Association, Inc. Tariff F.C.C. No. 4 identifies hub types (e.g., Digital Data, High Capacity Multiplexing, etc.) and hub levels (i.e., Hub, Terminus Hub, Intermediate Hub and Super-Intermediate Hub). Additionally, the Subtending section of Tariff F.C.C. No. 4 identifies wire centers and the Intermediate and/or Super-Intermediate Hubs with which they interconnect.

There is one Special Access Optional Rate Plan: a High Capacity Optional Rate Plan. The High Capacity Optional Rate Plan consists of a Term Discount Plan and a Capacity Discount Plan.

The Capacity Discount Plan applies to DS3 High Capacity Services and is only available to those customers that had this plan in place prior to February 1, 1997. Any DS3 Capacity Discount plan not associated with a Term Discount Plan will expire no later than February 1, 2002.

TARIFF BRANCH
RECEIVED
7/17/2006
PUBLIC SERVICE
COMMISSION
OF KENTUCKY

INTRASTATE ACCESS SERVICES TARIFF

5. Access Ordering (Cont'd)

5.2 Ordering Requirements (Cont'd)

5.2.2 Special Access Service (Cont'd)

When ordering High Capacity Term Discount Optional Rate plan or upgrades to the plan, discontinuance charges, as specified in 7.2.8 (A)(1) following, will not apply if the conditions set forth in 7.2.8 (A)(1) following are met and the customer provides the following ordering information:

Term Discounts-Upgrades in Capacity (DS1 to DS3)

- The customer's order for the disconnect of the existing DS1 Service and the installation of the new DS3 Service are received at the same time and specifically reference the application of upgrade in capacity.

- The customer's disconnect order for the existing DS1 Service must reference the DS3 Service installation order.

Customer orders to install and disconnect DS1 or DS3 services provided under a Term Discount plan where the number of DS1s or DS3s remains constant and the customer wishes to maintain the existing Term Discount period and minimum service period must:

- Be received at the same time.

- Reference continuation of the existing Term Discount period and the minimum service period on both the installation and disconnect orders.

5.2.3 WATS or WATS-Type Services

Special Access Service may be ordered for connection with FGA, FGB, FGC or FGD Switched Access Service at Telephone Company designated WATS Serving Offices (WSOs) for the provision of WATS or WATS-type Services and may be ordered separately by a customer other than the customer which orders the FGA, FGB, FGC or FGD Switched Access Service. For the Special Access Service the customer shall specify:

- the customer designated premises at which the Special Access service terminates
- the type of line (i.e., two-wire or four-wire)
- the type of calling (i.e., originating, terminating or two-way)
- type of Supervisory Signaling.

When the optional screening, switching and/or recording functions are not provided at the customer serving wire center, Channel Mileage, as set forth in 7.2.1 following, must be ordered between that wire center and the nearest WSO where the screening, switching and/or recording functions can be provided.

TARIFF BRANCH
RECEIVED
7/17/2006
PUBLIC SERVICE
COMMISSION
OF KENTUCKY

INTRASTATE ACCESS SERVICES TARIFF

5. **Access Ordering (Cont'd)**

5.2 **Ordering Requirements (Cont'd)**

5.2.4 **Mixed Use Facilities - Switched and Special Access**

Mixed use is the provision of both Switched and Special Access Services over the same High Capacity facilities. Mixed use facilities to a hub will be ordered and provided as Special Access Service. Where mixed use is employed, individual services utilizing these facilities must be ordered either as Switched Access Service or Special Access Service as further elaborated and set forth in 6.4.7 and 7.2.7 following. When placing the order for the individual service(s), the customer must specify a channel assignment for each service ordered.

5.2.5 **Miscellaneous Services**

Testing Service, Additional Labor, Telecommunications Service Priority and Special Facilities Routing shall be ordered with an Access Order may subsequently be added to a pending order at any time up to and including the service date for the access service. When miscellaneous services are added to a pending order a service date change may be required. When a service date change is required, the service date change charge as set forth in 17.4.1(B) following will apply. When miscellaneous services are added to a pending order, charges for a design change as set forth in 17.4.1(C) following will apply when an engineering review is required. If both a service date change and an engineering review are required, both the Service Date Change Charge and the Design Change Charge will apply as set forth in 5.4.3(B) following.

The rates and charges for these services, as set forth in Section 17 of this tariff, will apply in addition to the ordering charges set forth in Section 17 and the rates and charges for the Access Service with which they are associated.

Additional Engineering is not an ordering option, but will be applied to an Access Order when the Telephone Company determines that Additional Engineering is necessary to accommodate a customer request. Additional Engineering will only be required as set forth in 13.1 following. When it is required, the customer will be so notified and will be furnished with a written statement setting forth the justification for the Additional Engineering as well as an estimate of the charges. If the customer agrees to the Additional Engineering, a firm order will be established. If the customer does not want the service or facilities after being notified that Additional Engineering of Telephone Company facilities is required, the order will be withdrawn and no charges will apply. Once a firm order has been established, the total charge to the customer for the Additional Engineering may not exceed the estimated amount by more than 10%.

TARIFF BRANCH
RECEIVED
7/17/2006
PUBLIC SERVICE
COMMISSION
OF KENTUCKY

5. Access Ordering (Cont'd)

5.3 Access Orders For Services Provided By More Than One Telephone Company

Access Services provided by more than one Telephone Company are services where one end of the Local Transport, Directory Transport or Channel Mileage element is in the operating territory of one Telephone Company and the other end of the element is in the operating territory of a different Telephone Company or where the Interim NXX Translation Service and the end office are not provided by the same Telephone Company.

The ordering procedure for this service is dependent upon the billing arrangement, as set forth in 2.4.7 preceding, to be used by the Telephone Companies involved in providing the Access Service. The Telephone Company will notify the customer which of the ordering procedures will apply.

5.3.1 Non Meet Point Billing Ordering - FGA

(A) Single Company Billing Ordering

The Telephone Company receiving the order from the customer will arrange to provide the service and bill the customer as set forth in 2.4.7(A)(1). The customer will place the order with the Telephone Company as follows:

For FGA Switched Access Services the customer will place the order with the Telephone Company in whose territory the first point of switching is located. The first point of switching is the dial tone office.

When the first point of switching is not in the same Telephone Company's territory as the Interexchange Carrier premises, the customer must supply a copy of the order to the Telephone Company in whose territory the Interexchange Carrier premises is located and any other Telephone Company(s) involved in providing the service. When service is provided through a centralized equal access provider, the customer must supply a copy of the order to that provider.

5.3.2 Meet Point Billing Ordering

Each Telephone Company will provide its portion of the Access Service within its operating territory to an interconnection point(s) with the other Telephone Company(s). Billing Percentages will be determined by the Telephone Companies involved in providing the Access Service and listed in NATIONAL EXCHANGE CARRIER ASSOCIATION, INC. TARIFF F.C.C. NO. 4. Each Telephone Company will bill the customer for its portion of the service as set forth in 2.4.7. All other appropriate charges in each Telephone Company tariff are applicable.

For the service(s) ordered as set forth following, the customer must also supply a copy of the order to the Telephone Company in whose operating territory a customer designated premises is located and any other Telephone Company(s) involved in providing the service. Additionally, when service is provided through a centralized equal access provider, the customer must supply a copy of the order to that provider.

TARIFF BRANCH
RECEIVED
7/17/2006
PUBLIC SERVICE
COMMISSION
OF KENTUCKY

INTRASTATE ACCESS SERVICES TARIFF

5. Access Ordering (Cont'd)

5.3 Access Orders For Services Provided By More Than One Telephone Company (Cont'd)

5.3.2 Meet Point Billing Ordering (Cont'd)

(A) For Feature Group A and B Switched Access Services, the customer must place an order with the Telephone Company in whose territory the first point of switching is located, (i.e., FGA - dial tone office, FGB - access tandem or end office). The Telephone Company will designate the first point(s) of switching for FGB Services where the Telephone Company elects to provide equal access through a centralized equal access arrangement. Those Telephone Company offices providing equal access through centralized arrangements are identified in NATIONAL EXCHANGE CARRIER ASSOCIATION, INC. TARIFF F.C.C. No. 4.

(B) For Feature Group C and D Switched Access Services, the customer must place an order with the Telephone Company in whose territory the end office is located. Customers may, at their option, order FGD to the access tandem. When ordered to the access tandem, and the access tandem and the end office are not in the same Telephone Company operating territory, the customer must also supply a copy of the order to each additional Telephone Company subtending the access tandem.

(C) Customers ordering Special Access Service to be interconnected with Switched Access Services at Telephone Company designated WATS Serving Offices for the provision of WATS or WATS-type Services must place an order with each Telephone Company in whose territory the end office and the WATS Serving Office are located, if they are not collocated.

(D) Except for Special Access Service as set forth in (C) above or as set forth in (E) below, the customer may place the order for a Special Access Service with either Exchange Telephone Company.

(E) For Special Access Service involving a hub(s) the customer must place the order with the Telephone Company in whose territory the hub(s) is located.

(F) For initiation, additions, changes or deletions to the Interim NXX translation code(s), the customer must place an order with the Telephone Company who provides the Interim NXX Translation. The customer must also provide a copy of the order to the Telephone Companies subtending the Interim NXX Translation office.

TARIFF BRANCH
RECEIVED
7/17/2006
PUBLIC SERVICE
COMMISSION
OF KENTUCKY

INTRASTATE ACCESS SERVICES TARIFF

5. Access Ordering (Cont'd)

5.4 Charges Associated with Access Ordering

5.4.1 Access Order Charge

The Access Order Charge is applied to all customer requests for new Special Access, Switched Access, and Directory Assistance Service. In addition, the Access Order Charge is applicable to customer requests for additions, changes or rearrangements to existing Special Access, Public Data Network, Switched Access, and Directory Assistance Service with the following exceptions:

The Access Order Charge does not apply:

- When a Service Date Change Charge is applicable.
- When a Design Change Charge is applicable.
- To administrative changes as set forth in 6.4.1(B)(3) and 7.2.2(C)(3) following.
- When a change to a pending order does not result in the cancellation of the pending order and the issuance of a new order.
- When Interim NXX Translation charge is applicable.
- When a Miscellaneous Service Order Charge is applicable.
- When a Presubscription Charge is applicable.
- When a Telephone Company initiated network reconfiguration requires a customer's existing access service to be reconfigured.
- When a service with an ICB rate is converted to a similar service with an non-ICB tariff rate prior to the expiration of the ICB.
- When a Billing Name and Address charge is applicable.
- When a 900 Blocking Service charge is applicable.

TARIFF BRANCH
RECEIVED
7/17/2006
PUBLIC SERVICE
COMMISSION
OF KENTUCKY

INTRASTATE ACCESS SERVICES TARIFF

5. Access Ordering (Cont'd)

5.4 Charges Associated with Access Ordering (Cont'd)

5.4.1 Access Order Charge (Cont'd)

- When Payphone Service Providers (PSPs) obtain Coin Supervision Additive Service in conjunction with local exchange service lines for the provision of pay telephone service.

- When a customer requests a change of trunks from Tandem Switched Transport to Direct Trunked Transport or from Direct Trunked Transport to Tandem Switched Transport, or requests to rearrange Switched Access services between lower capacity and higher capacity facilities, (e.g., Voice Grade to/from DS1 or DS1 to/from DS3), providing:

  - the change is ordered anytime between July 1, 1994, and December 31, 1994 and
  - the change is completed no later than March 31, 1995, and
  - the orders to disconnect existing trunks and to connect the new trunks are placed at the same time, and
  - the number of installed trunks does not exceed the number of trunks disconnected. If the number of installed trunks exceeds the number of trunks disconnected, the Access Order Charge will apply unless the customer provides justification based upon standard engineering methods to show that the additional capacity is required to maintain the same level of service.

The Access Order Charge will be applied on a per order basis to each order received by the Telephone Company or copy of an order received by the Telephone Company pursuant to 5.3.1(B), 5.3.2, 5.3.2(B) and 5.3.2(G) preceding, except by the Telephone Company applying the Interim NXX Translation charge, and is in addition to other applicable charges as set forth in this and other sections of this tariff.

The Access Order Charge will be applied on a per order basis for any change, rearrangement or addition to the delivery of signaling to an existing STP Port.

TARIFF BRANCH
RECEIVED
7/17/2006
PUBLIC SERVICE
COMMISSION
OF KENTUCKY

INTRASTATE ACCESS SERVICES TARIFF

5. Access Ordering (Cont'd)

5.4 Charges Associated with Access Ordering (Cont'd)

5.4.2 Miscellaneous Service Order Charge

A Miscellaneous Service Order Charge, as set forth in 17.4.1(D) following, applies to any service, or combination of services, ordered simultaneously from Section 13. of the Tariff for which a service order is not already pending (with the exception of Presubscription (13.4), Billing Name and Address Service (13.9) and 900 Blocking Service (13.8) which does not have the charge applied). The Miscellaneous Service Order Charge is an administrative charge designed to compensate for the expenses associated with service order issuance.

The charge always applies to the following services since a pending service order would not exist:

- Overtime Repair (13.2.2),
- Standby Repair (13.2.3),
- Testing and Maintenance with Other Telephone Companies other than when in conjunction with Acceptance Testing (13.2.4),
- Other Labor (13.2.5),
- Maintenance of Service (13.3.2).

The Miscellaneous Service Order Charge will also apply to the following services if they are ordered subsequent to the initial installation of the associated access service, thereby necessitating the issuance of another service order:

- Telecommunications Service Priority (13.3.3),
- Controller Arrangement [13.3.4(A)].

The charge does not apply to the following services since there would exist a pending service order:

- Additional Engineering (13.1),
- Overtime Installation (13.2.1),
- Standby Acceptance Testing (13.2.3),
- Testing and Maintenance with Other Telephone Companies when in conjunction with Acceptance Testing (13.2.4),
- Additional Cooperative Acceptance Testing [13.3.1(A)(1) and 13.3.1(B)(1)].
- Coin Supervision Additive Service (13.12).

TARIFF BRANCH
RECEIVED
7/17/2006
PUBLIC SERVICE
COMMISSION
OF KENTUCKY

INTRASTATE ACCESS SERVICES TARIFF

5. Access Ordering (Cont'd)

5.4 Charges Associated with Access Ordering (Cont'd)

5.4.3 Access Order Change Charges

Access Order changes involve service date changes and design changes. The customer may request a change of its Access Order prior to the service date. The Telephone Company will make every effort to accommodate a requested change when it is able to do so with the normal work force assigned to complete such an order within normal business hours. If the change cannot be made with the normal work force during normal business hours, the Telephone Company will notify the customer. If the customer still desires the Access Order change, the Telephone Company will schedule a new service date as set forth in 5.1.2 preceding. All charges for Access Order change as set forth in 17.4.1(B) and (C) will apply on a per occurrence basis.

Any increase in the number of Special Access Service channels or Switched Access Service lines, trunks, busy hour minutes of capacity or Frame Relay Ports and/or PVCs or CCS/SS7 Port Terminations will be treated as a new Access Order (for the increased amount only).

If order changes are necessary to satisfy the transmission performance for a Special Access Service ordered by a customer, these changes will be made without order change charges being incurred by the customer.

(A) Service Date Change

The customer may request a change of service date on a pending Access Order prior to the service date. A change of service date is a change of the scheduled service date by the customer to either an earlier date or a later date which does not exceed 30 calendar days from the original service date.

If the Telephone Company determines that the customer's request can be accommodated without delaying the service dates for orders of other customers, the service date will be changed and the Service Date Change Charge, as set forth in 17.4.1(B) following, will be applied to the order.

If the service date is changed to an earlier date, and the Telephone Company determines additional labor or extraordinary costs are necessary to meet the earlier service date requested by the customer, the customer will be notified by the Telephone Company that Expedited Order Charges as set forth in 5.1.2 preceding apply. Such charges will apply in addition to the Service Date Change Charge.

TARIFF BRANCH
RECEIVED
7/17/2006
PUBLIC SERVICE
COMMISSION
OF KENTUCKY

5. Access Ordering (Cont'd)

5.4 Charges Associated with Access Ordering (Cont'd)

5.4.3 Access Order Change Charges (Cont'd)

(A) Service Date Change (Cont'd)

If the requested service date exceeds 30 calendar days following the original service date, and the Telephone Company determines that the customer's request can be accommodated, the Telephone Company will cancel the original order and apply the Cancellation Charges as set forth in 5.5.3 following. A new Access Order with a new service date will be issued. The Service Date Change Charge will not apply, however, the Access Order Charge will apply to the new order.

If the service date is changed due to a design change as set forth in (B) following, the Service Date Change Charge will apply.

(B) Design Change

The customer may request a design change to the service ordered prior to the requested service date. A design change is any change to an Access Order which requires engineering review. An engineering review is a review by Telephone Company personnel, of the service ordered and the requested changes to determine what changes in the design, if any, are necessary to meet the changes requested by the customer. Design changes include such things as the addition or deletion of optional features or functions or a change in the type of Transport Termination (Switched Access only), type of channel interface, type of Interface Group or technical specification package, or a change in the destination of PVC, speed of PVC, or speed of the end user port. Design changes do not include a change of customer designated premises, first point of switching, Feature Group type or Special Access Service channel type. Changes of this nature will require the issuance of a new order and the cancellation of the original order with appropriate cancellation charges applied.

The Telephone Company will review the requested change, notify the customer whether the change is a design change, if the change can be accommodated and if a new service date is required. If the customer authorizes the Telephone Company to proceed with the design change, a Design Change Charge as set forth in 17.4.1(C) following will apply in addition to the charge for Additional Engineering as set forth in 17.4.2 following. If a change of service date is required, the Service Date Change Charge as set forth in 17.4.1(B) following will also apply. The Access Order Charge as specified in 17.4.1(A) following does not apply.

TARIFF BRANCH
RECEIVED
7/17/2006
PUBLIC SERVICE
COMMISSION
OF KENTUCKY

INTRASTATE ACCESS SERVICES TARIFF

5. **Access Ordering (Cont'd)**

5.5 **Minimum Periods and Cancellations**

5.5.1 **Minimum Periods**

The minimum period for part-time Video and Program Audio Special Access Services is one day even though the service will be provided only for the duration of the event specified on the order (e.g., one-half hour, two hours, five hours, etc.).

The minimum period for Switched Access High Capacity DS3 Entrance Facilities and Direct Trunked Transport is as set forth in 6.1.3 following. The minimum period for High Capacity DS1 and DS3 Service is set forth in 7.2.8 following.

Switched Access usage rated services (i.e., End Office, Common Line, Tandem Switched Transport, and Residual Interconnection Charge) have no minimum period.

The minimum period for which all other Access Service is provided and for which charges are applicable is one month.

5.5.2 **Development of Minimum Period Charges**

When Access Service is disconnected after commencement of service but prior to the expiration of the minimum period, charges are applicable for the balance of the minimum period. A disconnect constitutes facilities being returned to available inventory.

The Minimum Period Charge for monthly billed services will be determined as follows:

(A) For Switched Access Service, the charge for a month or fraction thereof is equal to the applicable recurring charges plus any nonrecurring and/or special construction charge(s) that may be due.

(B) For Special Access Service and flat rated Switched Access Service the charge for a month or fraction thereof is the applicable monthly rates for the appropriate channel type plus any optional features, nonrecurring and/or special construction charge(s) that may apply.

TARIFF BRANCH
RECEIVED
7/17/2006
PUBLIC SERVICE
COMMISSION
OF KENTUCKY

INTRASTATE ACCESS SERVICES TARIFF

5. Access Ordering (Cont'd)

5.5 Minimum Periods and Cancellations (Cont'd)

5.5.2 Development of Minimum Period Charges (Cont'd)

The Minimum Period Charge for part-time Video and Program Audio Services is the applicable daily rate for the appropriate channel type as set forth in 7.2.4 following.

5.5.3 Cancellation of an Access Order

(A) A customer may cancel an Access Order for the installation of service on any date prior to the service date. The cancellation date is the date the Telephone Company receives written or verbal notice from the customer that the order is to be cancelled. The verbal notice must be followed by written confirmation within 10 days. If a customer or a customer's end user is unable to accept Access Service within 30 calendar days after the original service date, the customer has the choice of the following options:

- The Access Order shall be cancelled and charges set forth in (B) following will apply, or
- Billing for the service will commence.

In such instances, the cancellation date or the billing date, depending on which option is selected by the customer, shall be the 31st day beyond the original service date of the Access Order.

TARIFF BRANCH
RECEIVED
7/17/2006
PUBLIC SERVICE
COMMISSION
OF KENTUCKY

INTRASTATE ACCESS SERVICES TARIFF

5. Access Ordering (Cont'd)

5.5 Minimum Periods and Cancellations (Cont'd)

5.5.3 Cancellation of an Access Order (Cont'd)

(B) When a customer cancels an Access Order for the installation of service, a Cancellation Charge will apply as follows:

(1) Installation of Switched Access or Special Access Service facilities is considered to have started when the Telephone Company incurs any cost in connection therewith or in preparation thereof which would not otherwise have been incurred.

(2) Where the customer cancels an Access Order prior to the start of installation of access facilities, no charges shall apply.

(3) Where installation of access facilities has been started prior to the cancellation, the charges specified in (a) or (b) following, whichever is lower, shall apply.

(a) A charge equal to the costs incurred in such installation, less estimated net salvage. Such costs include the nonrecoverable cost of equipment and material ordered, provided or used, plus the nonrecoverable cost of installation and removal including the costs of engineering, labor, supervision, transportation, rights-of-way and other associated costs.

(b) The minimum period charges for Switched Access or Special Access Service ordered by the customer, as set forth in 5.5.2 preceding.

(C) When a customer cancels an order for the discontinuance of service, no charges apply for the cancellation.

(D) If the Telephone Company misses a service date by more than 30 days and such delay is not requested or caused by the customer (excluding those circumstances where the date is missed due to acts of God, governmental requirements, work stoppages and civil commotions), the customer may cancel the Access Order without incurring cancellation charges.

5.5.4 Partial Cancellation Charge

Any decrease in the number of ordered Special Access Service channels or Switched Access Service lines, trunks, busy hour minutes of capacity or CCS/SS7 Port Terminations will be treated as a partial cancellation and charges will be determined as set forth in 5.5.3(B) preceding.

TARIFF BRANCH
RECEIVED
7/17/2006
PUBLIC SERVICE
COMMISSION
OF KENTUCKY

6. Switched Access Service

6.1 General

Switched Access Service is available to all customers for their use in furnishing their services to end users. Switched Access Service provides a two-point communications path between a customer designated premises and an end user's premises. It provides for the use of common terminating, switching and trunking facilities, and for the use of common subscriber plant of the Telephone Company. Switched Access Service provides for the ability to originate calls from an end user's premises to a customer designated premises, and to terminate calls from a customer designated premises to an end user's premises in the LATA where it is provided. Specific references to material describing the elements of Switched Access Service are provided in 6.1.3 and 6.5 through 6.9 following.

Rates and charges for Switched Access Service depend generally on the specific Feature Group ordered by the customer, e.g., for MTS or WATS services or MTS/WATS equivalent services, and whether it is provided in a Telephone Company end office that is equipped to provide equal or non-equal access. Rates and charges for Switched Access Service are set forth in 17.2 following. The application of rates for Switched Access Service is described in 6.4 following. Rates and charges for services other than Switched Access Service, e.g., a customer's interLATA toll message service, may also be applicable when Switched Access Service is used in conjunction with these other services. Descriptions of such applicability are provided in 6.4.5, 6.4.9, 6.5.1(H), 6.5.3, 6.6.1(G), 6.6.2(D), 6.7.1(F) and 6.8.1(E) following. Finally, a credit is applied against line side Switched Access Service charges as described in 6.4.8 following.

6.1.1 Description and Provision of Switched Access Service Arrangements

(A) Description

Switched Access Service is provided in four different Feature Group arrangements which are service categories of standard and optional features. These are differentiated by their technical characteristics, e.g., line side vs. trunk side connection at the Telephone Company first point of switching. They are also differentiated by optional feature availability and the manner in which the end user accesses them in originating calling, e.g., with or without access codes of various lengths and digits.

The provision of each Feature Group requires Local Transport facilities, including an Entrance Facility where required, and the appropriate End Office functions. In addition, Special Access Service may, at the option of the customer, be connected with Feature Groups A, B, C, or D at Telephone Company designated WATS Serving Offices.

There are three specific transmission specifications (i.e., Types A, B and C) that have been identified for the provision of Feature Groups. The technical specifications for the Entrance Facility and Direct Trunked Transport are the same as those set forth in Section 7. following for Voice Grade and High Capacity services. The specifications provided are dependent on the Interface Group and the routing of the service, i.e., whether the service is routed directly to the end office or via an access tandem. The parameters for the transmission specifications are set forth in 15.1.2 following.

TARIFF BRANCH
RECEIVED
7/17/2006
PUBLIC SERVICE
COMMISSION
OF KENTUCKY

6. Switched Access Service (Cont'd)

6.1 General (Cont'd)

6.1.1 Description and Provision of Switched Access Service Arrangements (Cont'd)

(A) Description (Cont'd)

Feature Groups are arranged for either originating, terminating or two-way calling, based on the customer end office switching capacity ordered. Originating calling permits the delivery of calls from Telephone Exchange Service locations to the customer designated premises. Terminating calling permits the delivery of calls from the customer designated premises to Telephone Exchange Service locations. Two-way calling permits the delivery of calls in both directions, but not simultaneously. The Telephone Company will determine the type of calling to be provided unless the customer requests that a different type of directional calling is to be provided. In such cases, the Telephone Company will work cooperatively with the customer to determine the directionality.

There are various optional features associated with Local Transport, Common Switching and Transport Termination available with the Feature Groups. In addition, the Interim NXX Translation is available with Feature Group C and Feature Group D.

Detailed descriptions of each of the available Feature Groups are set forth in 6.5 through 6.9 following. Each Feature Group is described in terms of its specific physical characteristics and calling capabilities, the optional features available for use with it and the standard testing capabilities.

The Common Switching and Transport Termination optional features, which are described in 6.10 following, unless specifically stated otherwise, are available at all Telephone Company end office switches.

TARIFF BRANCH
RECEIVED
7/17/2006
PUBLIC SERVICE
COMMISSION
OF KENTUCKY

INTRASTATE ACCESS SERVICES TARIFF

6. Switched Access Service (Cont'd)

6.1 General (Cont'd)

6.1.1 Description and Provision of Switched Access Service Arrangements (Cont'd)

(B) Manner of Provision

Switched Access is furnished in either quantities of lines or trunks, or in busy hour minutes of capacity (BHMCs). FGA Access and FGB Access are furnished on a per-line or per-trunk basis respectively. FGC Access and FGD Access are furnished on a BHMC basis and a per trunk basis as set forth in 5.2 preceding.

BHMCs are differentiated by type and directionality of traffic carried over a Switched Access Service arrangement. Differentiation of traffic among BHMC types is necessary for the Telephone Company to properly design Switched Access Service to meet the traffic carrying capacity requirement of the customer.

There are three major BHMC categories identified as: Originating, Terminating and Directory Assistance. Originating BHMCs represent access capacity within a LATA for carrying traffic from the end user to the customer; Terminating BHMCs represent access capacity within a LATA for carrying traffic from the customer to the end user; and, Directory Assistance BHMCs represent access capacity within a LATA for carrying Directory Assistance traffic from the customer to a Directory Assistance location. When ordering capacity for FGC Access or FGD Access in BHMCs the customer must at a minimum specify such access capacity in terms of Originating BHMCs and/or Terminating BHMCs.

TARIFF BRANCH
RECEIVED
7/17/2006
PUBLIC SERVICE
COMMISSION
OF KENTUCKY

INTRASTATE ACCESS SERVICES TARIFF

6. Switched Access Service (Cont'd)

6.1 General (Cont'd)

6.1.1 Description and Provision of Switched Access Service Arrangements (Cont'd)

(B) Manner of Provision (Cont'd)

Because some customers will wish to further segregate their originating traffic into separate trunk groups or because segregation may be required by network considerations, originating BHMCs are further categorized into Domestic, 700, 800 series, 900, Operator, IDDD and Operator Transfer Services. Domestic BHMCs represent access capability for carrying only domestic traffic other than 700, 800 series, 900, Operator and Operator Transfer Services traffic; IDDD BHMCs represent access capacity for carrying only international traffic; and, 700, 800 series, 900, Operator and Operator Transfer Services BHMCs represent access capacity for carrying, respectively, only 700, 800 series, 900, Operator or Operator Transfer Services traffic. When ordering such types of access capacity, the customer must specify Domestic, 700, 800 series, 900, Operator, IDDD or Operator Transfer Services BHMCs.

6.1.2 Ordering Options and Conditions

Switched Access Service is ordered under the Access Order provisions set forth in 5.2 preceding. Also, included in that section are regulations concerning miscellaneous service order charges which may be associated with Switched Access Service ordering (e.g., Service Date Changes, Cancellations, etc.).

6.1.3 Rate Categories

There are four rate categories which apply to Switched Access Service:

- Local Transport (described in 6.1.3(A) following)
- End Office (described in 6.1.3(B) following)
- Chargeable Optional Features (described in 6.1.3(C) following)
- Common Line (described in Sections 3. preceding)

TARIFF BRANCH
RECEIVED
7/17/2006
PUBLIC SERVICE
COMMISSION
OF KENTUCKY

INTRASTATE ACCESS SERVICES TARIFF

6. Switched Access Service (Cont'd)

6.1 General (Cont'd)

6.1.3 Rate Categories (Cont'd)

The following diagram depicts a generic view of the components of Switched Access Service and the manner in which the components are combined to provide a complete Access Service.

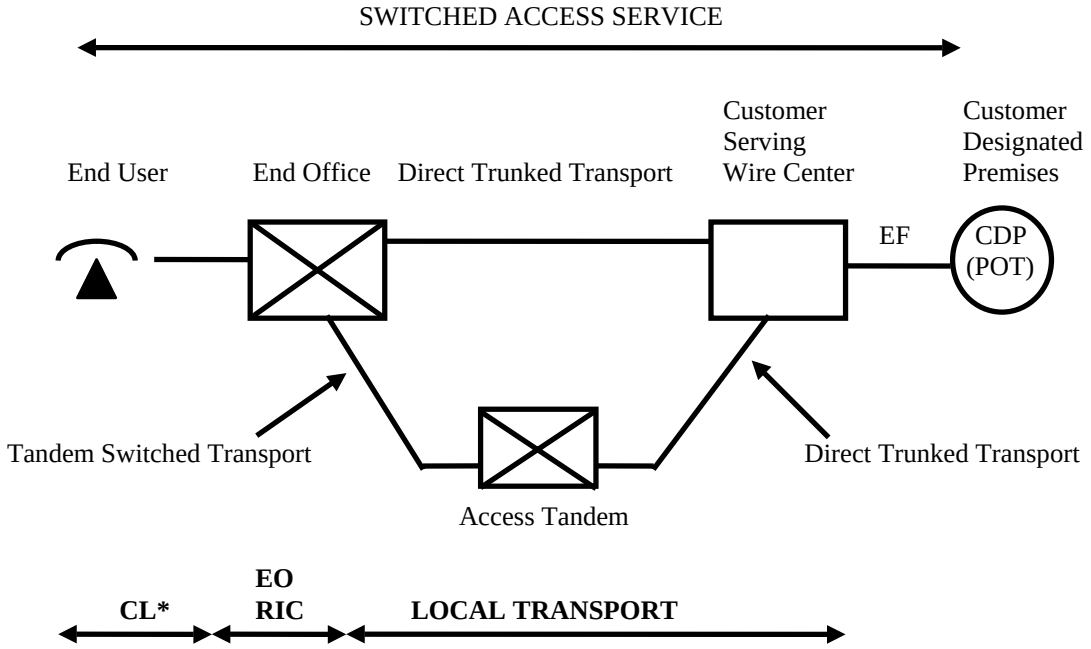

CL - Common Line
EO - End Office
EF - Entrance Facility
RIC - Residual Interconnection Charge
Direct Trunked Transport
-Direct Trunked Facility
-Direct Trunked Termination

Tandem Switched Transport
-Tandem Switched Facility
-Tandem Switched Termination
-Tandem Switching
-Local Transport Facility
-Local Transport Termination

*Common Line Access Service is provided under Section 3. Preceding.

TARIFF BRANCH
RECEIVED
7/17/2006
PUBLIC SERVICE COMMISSION OF KENTUCKY

6. Switched Access Service (Cont'd)

6.1 General (Cont'd)

6.1.3 Rate Categories (Cont'd)

(A) Local Transport

The Local Transport rate category establishes the charges related to the transmission and tandem switching facilities between the customer designated premises and the end office switch(es), which may be a Remote Switching Module(s) or WATS Serving Office, where the customer's traffic is switched to originate or terminate the customer's communications. Mileage measurement rules are set forth in 6.4.6 following and in this section.

Local Transport is a two-way voice frequency transmission path composed of facilities determined by the Telephone Company. The two-way voice frequency transmission path permits the transport of calls in the originating direction (from the end user end office switch to the customer designated premises) and in the terminating direction (from the customer designated premises to the end office switch), but not simultaneously. The voice frequency transmission path may be comprised of any form or configuration of plant capable of and typically used in the telecommunications industry for the transmission of voice and associated telephone signals within the frequency bandwidth of approximately 300 to 3000 Hz. The customer must specify the choice of facilities (i.e., Voice Grade 2 or 4 wire or High Capacity DS1 or DS3) to be used in the provision of the Direct Trunked Transport or Entrance Facility. Direct Trunked Transport and Entrance Facility Services are only available in conjunction with facilities transporting originating Feature Group D usage.

The customer must specify when ordering (1) whether the service is to be directly routed to an end office switch or through an access tandem switch, (2) the type of Direct Trunked Transport and whether it will overflow to Tandem Switched Transport when service is directly routed to an end office, (3) the type of Entrance Facility, (4) the directionality of the service, and (5) when multiplexing is required, the hub(s) at which the multiplexing will be provided.

Additionally, when service is to be routed through a Windstream access tandem switch, the customer must order the facility between the serving wire center and the tandem as Direct Trunked Transport.

When the customer has both Tandem Switched Transport and Direct Trunked Transport at the same end office, the customer will be provided Alternate Traffic Routing as set forth in 6.4.6 following.

Direct Trunked Transport is available at all tandems and at all end offices except those end offices identified in NATIONAL EXCHANGE CARRIER ASSOCIATION, INC. TARIFF F.C.C. No. 4, as not having the capability to provide Direct Trunked Transport. Direct Trunked Transport is not available: (1) from end offices that provide equal access through a Centralized Equal Access arrangement, or (2) from end offices that lack recording or measurement capability.

TARIFF BRANCH
RECEIVED
7/17/2006
PUBLIC SERVICE
COMMISSION
OF KENTUCKY

INTRASTATE ACCESS SERVICES TARIFF

6. Switched Access Service (Cont'd)

6.1 General (Cont'd)

6.1.3 Rate Categories (Cont'd)

(A) Local Transport (Cont'd)

Normally, Direct Trunked Transport of originating 800 series calls from an end office is available only from Service Switching Point (SSP) equipped end offices. However, certain SSP equipped end offices cannot accommodate the direct trunking of the 888 service access code. These end offices are identified in NATIONAL EXCHANGE CARRIER ASSOCIATION, INC., TARIFF F.C.C. NO. 4. Additionally, certain non-SSP equipped end offices can accommodate direct trunking of originating 800 series calls. These end offices are also identified in NATIONAL EXCHANGE CARRIER ASSOCIATION, INC., TARIFF F.C.C. No. 4.

Unless otherwise ordered by the F.C.C., where the Telephone Company elects to provide equal access through a centralized equal access arrangement, the Telephone Company will designate the serving wire center. The designated SWC will normally be that wire center which provides dial tone to the telephone company centralized Equal Access tandem office identified in NATIONAL EXCHANGE CARRIER ASSOCIATION, INC. TARIFF F.C.C. NO. 4. When service is provided in cooperation with a non telephone company provider of centralized Equal Access, the SWC will be that wire center which would normally provide dial tone to the telephone company point of interconnection with the non telephone company provider of Centralized Equal Access specified in the tariff of the Centralized Equal Access provider. Those Telephone Company offices providing equal access through centralized arrangements are identified in NATIONAL EXCHANGE CARRIER ASSOCIATION, INC. TARIFF F.C.C. NO. 4.

Local Transport is provided at the rates and charges set forth in 17.2.2 following. The application of these rates with respect to individual Feature Groups is as set forth in 6.4.1(C) following. When more than one Telephone Company is involved in providing the Switched Access Service, the Local Transport rates are applied as set forth in 2.4.7 preceding.

The Local Transport Rate Category includes five classifications of rate elements: (1) Entrance Facility, (2) Direct Trunked Transport, (3) Tandem Switched Transport, (4) Residual Interconnection Charge, and (5) Multiplexing.

(1) Entrance Facility

The Entrance Facility recovers a portion of the costs associated with a communications path between a customer designated premises and the serving wire center of that premises. Included as part of the Entrance Facility is a standard channel interface arrangement which defines the technical characteristics associated with the type of facilities to which the access service is to be connected at the customer designated premises and the type of signaling capability, if any.

TARIFF BRANCH
RECEIVED
7/17/2006
PUBLIC SERVICE
COMMISSION
OF KENTUCKY

6. Switched Access Service (Cont'd)

6.1 General (Cont'd)

6.1.3 Rate Categories (Cont'd)

(A) Local Transport (Cont'd)

(1) Entrance Facility (Cont'd)

Three types of Entrance Facility are available: (1) Voice Grade 2 or 4 wire (an analog channel with an approximate bandwidth of 300 to 3000 Hz), (2) High Capacity DS1 (an isochronous serial digital channel with a rate of 1.544 Mbps) and (3) High Capacity DS3 (an isochronous serial digital channel with a rate of 44.736 Mbps). The minimum period for which a DS3 Entrance Facility is provided is twelve months.

One charge applies for each Entrance Facility that is terminated at a customer designated premises. This charge specified in 17.2.2 following will apply even if the customer designated premises and the serving wire center are collocated in a Telephone Company building.

A customer's Local Transport may be connected to the Entrance Facility of another customer, providing the other customer submits a Letter of Authorization for this connection and assumes full responsibility for the cost of the Entrance Facility.

(2) Direct Trunked Transport

The Direct Trunked Transport rate elements recover a portion of the cost associated with a communications path between a serving wire center and an end office or serving wire center and a tandem on circuits dedicated to the use of a single customer.

Direct Trunked Transport is required at all tandems and is available to all end offices except those end offices identified in NATIONAL EXCHANGE CARRIER ASSOCIATION, INC. TARIFF F.C.C. NO. 4, WIRE CENTER INFORMATION as not having the capability to provide Direct Trunked Transport.

Direct Trunked Transport is not available: (1) from end offices that provide equal access through a Centralized Equal Access arrangement, or (2) from end offices that lack recording or measurement capability.

Normally, Direct Trunked Transport of originating 800 series calls from an end office is available only from Service Switching Point (SSP) equipped end offices. However, certain SSP equipped end offices cannot accommodate the direct trunking of the 888 service access code. These end offices are identified in NATIONAL EXCHANGE F.C.C. NO. 4. Additionally, certain non-SSP equipped end offices can accommodate direct trunking of originating 800 series calls. These end offices are also identified in NATIONAL EXCHANGE CARRIER ASSOCIATION, INC., TARIFF F.C.C. No. 4.

TARIFF BRANCH
RECEIVED
7/17/2006
PUBLIC SERVICE
COMMISSION
OF KENTUCKY

INTRASTATE ACCESS SERVICES TARIFF

6. Switched Access Service (Cont'd)

6.1 General (Cont'd)

6.1.3 Rate Categories (Cont'd)

(A) Local Transport (Cont'd)

(2) Direct Trunked Transport (Cont'd)

Three types of Direct Trunked Transport are available: (1) Voice Grade (an analog channel with an approximate bandwidth of 300 to 3000 Hz), (2) High Capacity DS1 (an isochronous serial digital channel with a rate of 1.544 Mbps), and (3) High Capacity DS3 (an isochronous serial digital channel with a rate of 44.736 Mbps). The minimum period for which a High Capacity DS3 Direct Trunked Transport is provided is twelve months.

High Capacity DS3 Direct Trunked Transport can not be terminated at end offices that are not identified as hub offices that provide DS3 to DS1 multiplexing. Additionally, DS1 Direct Trunked Transport can not be terminated at end offices that are not identified as hub offices that provide DS1 to Voice Grade multiplexing or are not electronic end offices. Offices that provide multiplexing are identified in NATIONAL EXCHANGE CARRIER ASSOCIATION, INC. TARIFF F.C.C. NO. 4, WIRE CENTER INFORMATION.

Direct Trunked Transport rates consist of a Direct Trunked Facility rate specified in 17.2.2 following which is applied on a per mile basis and a Direct Trunked Termination rate which is applied at each end of each measured segment of the Direct Trunked Facility (e.g., at the end office, hub, tandem, and serving wire center). When the Direct Trunked Facility mileage is zero, neither the Direct Trunked Facility rate nor the Direct Trunked Termination rate will apply.

The Direct Trunked Facility rate recovers a portion of the costs of transmission facilities, including intermediate transmission circuit equipment, between the end points of the interoffice circuits.

The Direct Trunked Termination rate specified in 17.2.2 following recovers a portion of the costs of the circuit equipment that is necessary for the termination of each end of the Direct Trunked Facility.

TARIFF BRANCH
RECEIVED
7/17/2006
PUBLIC SERVICE
COMMISSION
OF KENTUCKY

6. Switched Access Service (Cont'd)

6.1 General (Cont'd)

6.1.3 Rate Categories (Cont'd)

(A) Local Transport (Cont'd)

(3) Tandem Switched Transport

The Tandem Switched Transport rate elements recover a portion of the costs associated with a communications path between the tandem and the end office on circuits that are switched at a tandem switch. Tandem Switched The Tandem Switched Transport rate elements recover a portion of the costs associated with a communications path between the tandem and the end office on circuits that are switched at a tandem switch. Transport Switched Transport consists of circuits used in common by multiple customers from the tandem to the end office.

Tandem Switched Transport rates consist of a Tandem Switching rate, a Tandem Switched Facility rate, and a Tandem Switched Termination rate. When the Telephone company has identified in NECA Tariff F.C.C. No. 4, Wire Center Information that it has not received a bona fide request for Direct Trunked Transport, Local Transport Facility and Local Transport Termination rates and charges will apply instead of Tandem Switched Facility, Tandem Switched Termination, and Tandem Switching rates and charges.

In those instances where an SSP equipped end office is capable of handling 800 traffic on a direct trunked basis but incapable of handling 888 traffic on a direct trunked basis, a full credit will be provided for tandem switched transport charges associated with FGC and FGD service for 888 traffic delivered at the tandem. This results in all 800 series traffic being rated as direct trunked transport regardless of whether the SSP equipped end office is capable of handling 888 traffic on a direct trunked basis. Those SSP equipped end offices that cannot accommodate direct trunking of originating 888 traffic are identified in NECA TARIFF F.C.C. NO. 4, WIRE CENTER INFORMATION.

(a) The Tandem Switching rate recovers a portion of the costs of switching traffic through an access tandem. The Tandem Switching rate specified in 17.2.2 following is applied on a per access minute per tandem basis for all originating and all terminating minutes of use switched at the tandem. Tandem locations are identified in NATIONAL EXCHANGE CARRIER ASSOCIATION, INC. TARIFF F.C.C. NO. 4 WIRE CENTER INFORMATION.

(b) The Tandem Switched Facility rate recovers a portion of the costs of transmission facilities, including intermediate transmission circuit equipment, between the end points of interoffice circuits. The Tandem Switched Facility rate specified in 17.2.2 following is applied on a per access minute per mile basis for all originating and terminating minutes of use routed over the facility.

TARIFF BRANCH
RECEIVED
7/17/2006
PUBLIC SERVICE
COMMISSION
OF KENTUCKY

6. Switched Access Service (Cont'd)

6.1 General (Cont'd)

6.1.3 Rate Categories (Cont'd)

(A) Local Transport (Cont'd)

(3) Tandem Switched Transport (Cont'd)

(c) The Tandem Switched Termination rate recovers a portion of the costs of circuit equipment necessary for the termination of each end of each measured segment of the Tandem Switched Facility. The Tandem Switched Termination rate specified in 17.2.2 following is applied on a per access minute basis (for all originating and terminating minutes of use routed over the facility) at each end of each measured segment of Tandem Switched Facility (e.g., at the end office, Feature Group A dial tone office, host office, tandem, and serving wire center). When the Tandem Switched Facility mileage is zero, neither the Tandem Switched Facility rate nor the Tandem Switched Termination rate will apply.

(d) The Local Transport Facility rate recovers a portion of the cost related to the transmission and tandem switching facilities between the customer designated premises and the end office switch(es) when the customer's traffic is switched to originate or terminate the customer's communications. For purposes of determining Local Transport Facility measurement, distance will be measured from the wire center that normally serves the customer designated premises to the end office switch(es), which may be Remote Switching Module(s). Exceptions to the Local Transport Facility measurement rules are as set forth in 6.4.6 following. The Local Transport Facility rate specified in 17.2.2 following is applied on a per access minute per mile basis for all originating and terminating minutes of use routed over the facility.

TARIFF BRANCH
RECEIVED
7/17/2006
PUBLIC SERVICE
COMMISSION
OF KENTUCKY

INTRASTATE ACCESS SERVICES TARIFF

6. Switched Access Service (Cont'd)

6.1 General (Cont'd)

6.1.3 Rate Categories (Cont'd)

(A) Local Transport (Cont'd)

(3) Tandem Switched Transport (Cont'd)

(e) The Local Transport Termination rate provides for the communications frequency transmission path at the Telephone Company switching office and includes a portion of Central Office Switching and Central Office Circuit equipment (e.g. signaling, transmission devices, padding, carrier channels, etc.). The Local Transport Termination rate specified in 17.2.2 following is applied on a per access minute basis (for all originating and terminating minutes of use routed over the facility) at the end of the Local Transport Facility that is most distant from the customer's designated premises (e.g. end office). The Local Transport Termination rate will also apply if the IC serving wire center and the end user serving wire center are collocated.

(4) Residual Interconnection Charge

The Residual Interconnection Charge recovers the costs associated with Local Transport that are not recovered by the Entrance Facility, Direct Trunked Transport, Tandem Switched Transport, Multiplexing, or dedicated signaling (i.e., SS7) rates. The Residual Interconnection Charge specified in 17.2.2 following applies to both Tandem Switched and Direct Trunked access minutes of use.

The Residual Interconnection Charge does not apply when the Telephone Company has identified in NECA Tariff F.C.C. No. 4, Wire Center Information that it has not received a bona fide request for Direct Trunked Transport and is therefore applying Local Transport Facility and Local Transport Termination rates and charges instead of Tandem Switched Facility, Tandem Switched Termination, and Tandem Switching rates and charges.

(5) Multiplexing

DS3 to DS1 Multiplexing charges specified in 17.2.2 following apply when a High Capacity DS3 Entrance Facility or High Capacity DS3 Direct Trunked Facility is connected with High Capacity DS1 Direct Trunked Transport. The DS3 to DS1 multiplexer will convert a 44.736 Mbps channel to 28 DS1 channels using digital time division multiplexing.

TARIFF BRANCH
RECEIVED
7/17/2006
PUBLIC SERVICE
COMMISSION
OF KENTUCKY

6. Switched Access Service (Cont'd)

6.1 General (Cont'd)

6.1.3 Rate Categories (Cont'd)

(A) Local Transport (Cont'd)

(5) Multiplexing (Cont'd)

DS1 to Voice Grade Multiplexing charges apply when a High Capacity DS1 Entrance Facility or High Capacity DS1 Direct Trunked Facility is connected with Voice Grade Direct Trunked Transport. However, a DS1 to Voice Grade Multiplexing charge does not apply when a High Capacity DS1 Entrance Facility or High Capacity DS1 Direct Trunked Transport is terminated at an electronic end office and only Switched Access Service is provided over the DS1 facility (i.e., Voice Grade Special Access channels are not derived). The DS1 to Voice Grade multiplexer will convert a 1.544 Mbps channel to 24 Voice Grade channels.

Multiplexing is only available at wire centers identified in NATIONAL EXCHANGE CARRIER ASSOCIATION, INC., TARIFF F.C.C. NO. 4, WIRE CENTER INFORMATION.

(6) Interface Groups

Ten Interface Groups are provided for terminating the Entrance Facility at the customer's designated premises. Technical specifications concerning the available interface groups are set forth in 15.1 following.

(7) Nonchargeable Optional Features

Where transmission facilities permit, the individual transmission path between the customer's designated premises and the first point of switching, may at the option of the customer, be provided with the following optional features as set forth and described in 15.1.1(E) following.

- Supervisory Signaling
- Customer Specified Entry Switch Receive Level
- Customer Specification of Local Transport Termination
- 64 Clear Channel Capability

When a customer subscribes to Common Channel Signaling (SS7) Network Connection Service (CCSNC Service), the following optional features are made available and are described in 6.10.1 following.

- Signaling System 7 (SS7) Signaling
- Calling Party Number
- Carrier Selection Parameter
- Charge Number Parameter

TARIFF BRANCH
RECEIVED
7/17/2006
PUBLIC SERVICE
COMMISSION
OF KENTUCKY

INTRASTATE ACCESS SERVICES TARIFF

6. Switched Access Service (Cont'd)

6.1 General (Cont'd)

6.1.3 Rate Categories (Cont'd)

(A) Local Transport (Cont'd)

(8) Chargeable Optional Features

Common Channel Signaling, Signaling System 7 (CCS/SS7) Network Connection (CCSNC) Service provides a signaling path between a customer's designated Signaling Point of Interface (SPOI) and a Telephone Company's Signaling Transfer Point (STP). CCSNC is provided as set forth in 6.10.5 following.

800 Data Base Access Service is provided to all customers in conjunction with FGC and FGD switched access service. A Basic or Vertical Feature Query charge, as set forth in 17.2.2 (B) following, is assessed for each completed query returned from the 800 data base whether or not the actual call is delivered to the customer. The query is considered completed when the appropriate call routing information is returned to the Service Switching Point (SSP) that launched the query. The Basic Query provides the identification of the customer to whom the call will be delivered and includes area of service routing which allows routing of 800 series calls by telephone companies to different interexchange carriers based on the Local Access Transport Area (LATA) in which the call originates. The Vertical Feature Query provides this same customer identification function in addition to vertical features which may include: (1) call validation (ensuring that calls originate from subscribed service areas); (2) POTS translation of 800 series numbers (which is generally necessary for the routing of 800 series calls); (3) alternate POTS translation (which allows subscribers to vary the routing of 800 series calls based on factors such as time of day, place of origination of the call, etc.); and (4) multiple carrier routing (which allows subscribers to route to different carriers based on factors similar to those in (3).

(B) End Office

The End Office rate category establishes the charges related to the local end office switching and end user termination functions necessary to complete the transmission of Switched Access communications to and from the end users served by the local end office. The End Office rate category includes the Local Switching and Information Surcharge rate elements. Directory Assistance Service is set forth in Section 9. following.

TARIFF BRANCH
RECEIVED
7/17/2006
PUBLIC SERVICE
COMMISSION
OF KENTUCKY

6. Switched Access Service (Cont'd)

6.1 General (Cont'd)

6.1.3 Rate Categories (Cont'd)

(B) End Office (Cont'd)

(1) Local Switching

The Local Switching rate element establishes the charges related to the use of end office switching equipment, the terminations in the end office of end user lines, and the terminations of calls at Telephone Company Intercept Operators or recordings. The premium charge is divided into two distinct categories, i.e., Local Switching 1 and Local Switching 2. The first category, Local Switching 1, is applicable to Feature Groups A and B. It also applies to Feature Group B with an Abbreviated Dialing Arrangement which is multiplied by the ADA rate factor listed in 17.2.4 following. Local Switching 1 does not apply to:

- Feature Groups A and B when utilized to provide MTS/WATS service, and
- Feature Groups A and B used for terminating inward WATS and WATS-type service at an equal access WATS Serving Office.

The second category, Local Switching 2, is applicable to:

- Feature Groups C and D, and
- Feature Groups A and B when utilized to provide MTS/WATS service.
- Feature Group B when routed over Feature Group D facilities at an office or access tandem.
- Feature Groups A and B used for terminating inward WATS and WATS-type service at an equal access WATS Serving Office.

Local Switching does not apply to Feature Groups B and D Switched Access Services associated with Wireless Switching Center (WSCs) directly interconnected to a Telephone Company access tandem office.

Where end offices are appropriately equipped, international dialing may be provided as a capability associated with Local Switching 2 which provides local dial switching for Feature Groups C and D. International dialing provides the capability of switching international calls with service prefix and address codes having more digits than are capable of being switched through a standard FGC or FGD equipped end office.

TARIFF BRANCH
RECEIVED
7/17/2006
PUBLIC SERVICE
COMMISSION
OF KENTUCKY

INTRASTATE ACCESS SERVICES TARIFF

6. Switched Access Service (Cont'd)

6.1 General (Cont'd)

6.1.3 Rate Categories (Cont'd)

(B) End Office (Cont'd)

(1) Local Switching (Cont'd)

Rates for Local Switching 1 and Local Switching 2 are set forth in 17.2.3 following. The application of these rates with respect to individual Feature Groups is as set forth in 6.4.1(C) following.

There are four types of functions included in the Local Switching rate element: Common Switching, Transport Termination, Line Termination and Intercept. These are described in (a) through (d) following.

(a) Common Switching

Common Switching provides the local end office switching functions associated with the various access (i.e., Feature Group) switching arrangements. The Common Switching arrangements provided for the various Feature Group arrangements are described in 6.5 through 6.9 following.

Included as part of Common Switching are various nonchargeable optional features which the customer can order to meet the customer's specific communications requirements. These optional features are described in 6.10.1 following.

(b) Transport Termination

Transport Termination functions provide for the line or trunk side arrangements which terminate the Local Transport facilities. Included as part of these functions are various nonchargeable optional termination arrangements. These optional terminating arrangements are described in 6.10.2 following.

The number of Transport Terminations provided will be determined by the Telephone Company as set forth in 6.2.5 following.

TARIFF BRANCH
RECEIVED
7/17/2006
PUBLIC SERVICE
COMMISSION
OF KENTUCKY

INTRASTATE ACCESS SERVICES TARIFF

6. Switched Access Service (Cont'd)

6.1 General (Cont'd)

6.1.3 Rate Categories (Cont'd)

(B) End Office (Cont'd)

(1) Local Switching (Cont'd)

(c) Line Termination

Line Termination provides for the terminations of end user lines in the local end office. There are two types of Line Terminations, i.e., Common Line Terminations and Special Access Service Terminations utilized in the provision of WATS or WATS-type services at Telephone Company designated WATS Serving Offices.

The above Special Access Service Terminations are differentiated by line side vs. trunk side terminations. In addition, there are various types of originating and terminating line side terminations depending on the type of signaling associated with the Special Access Service. Line side terminations are available with either dial pulse or dual tone multifrequency address signaling.

(d) Intercept

The Intercept function provides for the termination of a call at a Telephone Company Intercept operator or recording. The operator or recording tells a caller why a call, as dialed, could not be completed, and if possible, provides the correct number.

(2) Information Surcharge

Information Surcharge rates are assessed to a customer based on the total number of access minutes. Information Surcharge rates are as set forth in 17.2.3(B) following. The application of these rates with respect to individual Feature Groups is as set forth in 6.4.1(C) following.

The Information Surcharge does not apply to Feature Groups B and D Switched Access Services associated with Wireless Switching Centers (WSCs) directly interconnected to a Telephone Company access tandem office.

The number of end office switching transmission paths will be determined as set forth in 6.2.5 following.

TARIFF BRANCH
RECEIVED
7/17/2006
PUBLIC SERVICE
COMMISSION
OF KENTUCKY

INTRASTATE ACCESS SERVICES TARIFF

6. Switched Access Service (Cont'd)

6.1 General (Cont'd)

6.1.3 Rate Categories (Cont'd)

(C) Chargeable Optional Features

Where facilities permit, the Telephone Company will, at the option of the customer, provide the following chargeable optional features.

(1) Interim NXX Translation

The Interim NXX Translation rate element provides for customer identification of non-data base services when calls are directed by end users in the 1+SAC+NXX-XXXX (e.g., 1+900+NXX-XXX) format. The NXX codes are assigned to specific customers in conformance with the North American Numbering Plan (NANP). NXX code assignment(s) will be made by the Bellcore NANP Coordinator. The Telephone Company will use the NXX code to identify the customer to whose point of termination the traffic is to be delivered, (i.e., at appropriately equipped electronic end offices, access tandems or through contracted arrangements with other parties.) It is then the responsibility of the customer to do any further translation the customer deems necessary to route the call. Customer assigned NXX codes which have not been ordered will be blocked.

A nonrecurring charge, as set forth in 17.2.1 following, is associated with this optional feature. This nonrecurring charge is assessed by the Telephone Company on a per order, per LATA or Market Area basis and is applied in lieu of the Access Order Charge specified in 17.4.1(A) following. The nonrecurring charge is assessed only by the Telephone Company that provides the final translation function. A Telephone Company is said to have provided the final Interim NXX Translation when its translation identifies the customer's traffic and this traffic is then delivered to the customer's point of termination without any further translation. The description and application of this charge with respect to Feature Group C and Feature Group D is as set forth in 6.4.1(B)(2) and 6.4.1(C)(2) following.

TARIFF BRANCH
RECEIVED
7/17/2006
PUBLIC SERVICE COMMISSION OF KENTUCKY

INTRASTATE ACCESS SERVICES TARIFF

6. Switched Access Service (Cont'd)

6.1 General (Cont'd)

6.1.3 Rate Categories (Cont'd)

(C) Chargeable Optional Features (Cont'd)

(2) 800 Data Base Access Service

800 Data Base Access Service is provided to all customers in conjunction with FGC and FGD switched access service. When a 1+800 series +NXX-XXXX call
is originated by an end user, the Telephone Company will utilize the Signaling System 7 (SS7) network to query an 800 data base to identify the customer to whom the call will be delivered and provide vertical features based on the dialed ten digits. The call will then be routed to the identified customer over FGC or FGD switched access. The 800 series includes the following service access codes: 800, 888, 877, 866, 855, 844, 833 and 822.

A Basic or Vertical Feature Query charge, as set forth in 17.2.2(B) following, is assessed for each completed query returned from the data base identifying the customer to whom the call will be delivered whether or not the actual call is delivered to the customer. The query is considered completed when the appropriate call routing information is returned to the Service Switching Point (SSP) that launched the query. The Basic Query provides the identification of the customer to whom the call will be delivered and includes area of service routing which allows routing of 800 series calls by telephone companies to different interexchange carriers based on the Local Access Transport Area (LATA) in which the call originates. The Vertical Feature Query provides the same customer identification as the basic query and vertical features which may include: (1) call validation, (ensuring that calls originate from subscribed service areas); (2) POTS translation of 800 series numbers; (3) alternate POTS translation (which allows subscribers to vary the routing of 800 series calls based on factors such as time of day, place or origination of the call, etc.); and (4) multiple carrier routing (which allows subscribers to route to different carriers based on factors similar to those in (3)).

The description and application of this charge with respect to Feature Group C or Feature Group D is as set forth in 6.4.1(C)(2) and 6.4.1(C)(8) following.

TARIFF BRANCH
RECEIVED
7/17/2006
PUBLIC SERVICE
COMMISSION
OF KENTUCKY

INTRASTATE ACCESS SERVICES TARIFF

6. Switched Access Service (Cont'd)

6.1 General (Cont'd)

6.1.4 Special Facilities Routing

Any customer may request that the facilities used to provide Switched Access Service be specially routed. The regulations for Special Facilities Routing (i.e., Avoidance, Diversity and Cable-Only) are set forth in Section 11. following.

6.1.5 Design Layout Report

At the request of the customer, the Telephone Company will provide to the customer the makeup of the facilities and services provided from the customer's premises to the first point of switching. This information will be provided in the form of a Design Layout Report. The Design Layout Report will be provided to the customer at no charge, and will be reissued or updated whenever these facilities are materially changed.

6.2 Undertaking of the Telephone Company

In addition to the obligations of the Telephone Company set forth in Section 2. preceding, the Telephone Company has certain other obligations concerning only the provision of Switched Access Service. These obligations are as follows:

6.2.1 Network Management

The Telephone Company will administer its network to insure the provision of acceptable service levels to all telecommunications users of the Telephone Company's network services. Generally, service levels are considered acceptable only when both end users and customers are able to establish connections with little or no delay encountered within the Telephone Company network. The Telephone Company maintains the right to apply protective controls, i.e., those actions, such as call gapping, which selectively cancel the completion of traffic, over any traffic called over its network, including that associated with a customer's Switched Access Service. Generally, such protective measures would only be taken as a result of occurrences such as failure or overload of Telephone Company or customer facilities, natural disasters, mass calling or national security demands. In the event that the protective controls applied by the Telephone Company result in the complete loss of service by the customer, the customer will be granted a Credit Allowance for Service Interruption as set forth in 2.4.4(B)(3) preceding.

TARIFF BRANCH
RECEIVED
7/17/2006
PUBLIC SERVICE
COMMISSION
OF KENTUCKY

INTRASTATE ACCESS SERVICES TARIFF

6. Switched Access Service (Cont'd)

6.2 Undertaking of the Telephone Company (Cont'd)

6.2.2 Transmission Specifications

Each Switched Access Service transmission path is provided with standard transmission specifications. There are three different standard specifications (Types A, B and C). The standard for a particular transmission path is dependent on the Feature Group, the Interface Group and whether the service is directly routed or via an access tandem. The available transmission specifications are set forth in 15.1.2 following. Data Transmission Parameters are also provided with each Switched Access Service transmission path. The Telephone Company will, upon notification by the customer that the data parameters set forth in 15.1.3 following are not being met, conduct tests independently or in cooperation with the customer, and take any necessary action to insure that the data parameters are met.

The Telephone Company will maintain existing transmission specifications on functioning service configurations installed prior to May 25, 1984 except that service configurations having performance specifications exceeding the standards set forth in 15.1.2 following will be maintained at performance levels specified.

The transmission specifications concerning Switched Access Service are limits which, when exceeded, may require the immediate corrective action of the Telephone Company. The transmission specifications are set forth in 15.1.2 following. Acceptance limits are set forth in Technical Reference GR-334-CORE. This Technical Reference also provides the basis for determining Switched Access Service maintenance limits.

6.2.3 Provision of Service Performance Data

Subject to availability, end-to-end service performance data available to the Telephone Company through its own service evaluation routines, may also be made available to the customer based on previously arranged intervals and format. These data provide information on overall end-to-end call completion and non- completion performance, e.g., customer equipment blockage, failure results and transmission performance. These data do not include service performance data which are provided under other tariff sections, e.g., testing service results. If data are to be provided in other than paper format, the charges for such exchange will be determined on an individual case basis.

TARIFF BRANCH
RECEIVED
7/17/2006
PUBLIC SERVICE
COMMISSION
OF KENTUCKY

6. Switched Access Service (Cont'd)

6.2 Undertaking of the Telephone Company (Cont'd)

6.2.4 Testing

(A) Acceptance Testing

At no additional charge the Telephone Company will, at the customer's request, cooperatively test at the time of installation, the following parameters: loss, C-notched noise, C-message noise, 3-tone slope, d.c. continuity and operational signaling. When the Local Transport is provided with Interface Groups 2 through 10, and the Transport Termination is two-wire (i.e., there is a four-wire to two-wire conversion in Local Transport), balance parameters (equal level echo path loss) may also be tested.

(B) Routine Testing

At no additional charge, the Telephone Company will, at the customer's request, test after installation on an automatic or manual basis, 1004 Hz loss, C-message noise and Balance (Improved Return loss).

In the case of automatic testing, the customer shall provide remote office test lines and 105 test lines with associated responders or their functional equivalent.

The frequency of these tests will be that which is mutually agreed upon by the customer and the Telephone Company, but shall consist of not less than quarterly 1004Hz Loss and C-message noise tests and an annual Balance test. Trunk test failures requiring customer participation for trouble resolution will be provided to the customer on an as-occurs basis.

Additional tests may be ordered as set forth in 13.3.1 following. Charges for these additional tests are set forth in 17.4.4 following.

6.5.5 Determination of Number of Transmission Paths

For Feature Groups A and B, which are ordered on a per line or per trunk basis respectively, and Feature Groups C and D when ordered on a per trunk basis, the customer specifies the type of transport facilities and the number of channels in the order for service.

For Tandem Switched Transport, the Telephone Company will determine the number of Switched Access Service transmission paths to be provided for the Switched Access Feature Group C or D busy hour minutes of capacity ordered. The number of transmission paths will be developed using the total busy hour minutes of capacity by type (as described in 6.1.1(B) preceding) for the end offices for each Feature Group ordered from a customer's designated premises. The total busy hour minutes of capacity by type (e.g., originating, terminating, IDDD, Operator) for the end office will be converted to transmission paths using standard Telephone Company traffic engineering methods. The number of transmission paths provided shall be the number required based on (1) the use of access tandem switches and end office switches, (2) the use of end office switches only, or (3) the use of tandem switches only.

TARIFF BRANCH
RECEIVED
7/17/2006
PUBLIC SERVICE
COMMISSION
OF KENTUCKY

INTRASTATE ACCESS SERVICES TARIFF

6. Switched Access Service (Cont'd)

6.2 Undertaking of the Telephone Company (Cont'd)

6.2.6 Trunk Group Measurement Reports

Subject to availability, the Telephone Company will make available trunk group data in the form of usage in CCS, peg count and overflow, to the customer based on previously agreed to intervals.

6.3 Obligations of the Customer

In addition to the obligations of the customer set forth in Section 2. preceding, the customer has certain specific obligations pertaining to the use of Switched Access Service. These obligations are as follows:

6.3.1 Report Requirements

Customers are responsible for providing the following reports to the Telephone Company, when applicable.

(A) Jurisdictional Reports

When a customer orders Switched Access Service for both interstate and intrastate use, the customer is responsible for providing reports as set forth in 2.3.11 preceding. Charges will be apportioned in accordance with those reports.

(B) Code Screening Reports

When a customer orders service class routing, trunk access limitation or call gapping arrangements, it must report the number of trunks and/or the appropriate codes to be instituted in each end office or access tandem switch, for each of the arrangements ordered.

TARIFF BRANCH
RECEIVED
7/17/2006
PUBLIC SERVICE
COMMISSION
OF KENTUCKY

INTRASTATE ACCESS SERVICES TARIFF

6. Switched Access Service (Cont'd)

6.3 Obligations of the Customer (Cont'd)

6.3.2 Trunk Group Measurement Reports

With the agreement of the customer, trunk group data in the form of usage in CCS, peg count and overflow for its end of all access trunk groups, were technologically feasible, will be made available to the Telephone Company. These data will be used to monitor trunk group utilization and service performance and will be based on previously arranged intervals and format.

6.3.3 Supervisory Signaling

The customer's facilities shall provide the necessary on-hook, off-hook, answer and disconnect supervision.

6.3.4 Short Duration Mass Calling Requirements

When a customer offers service for which a substantial call volume is expected during a short period of time (e.g., 900 service media stimulated events), the customer must notify the Telephone Company at least 48 hours in advance of each peak period. Notification should include the nature, time, duration, and frequency of the event, as estimated call volume, and the telephone number(s) to be used.

On the basis of the information provided, the Telephone Company may invoke network management controls, (e.g., call gapping and code blocking) to reduce the probability of excessive network congestion. The Telephone Company will work cooperatively with the customer to determine the appropriate level of such control.

TARIFF BRANCH
RECEIVED
7/17/2006
PUBLIC SERVICE
COMMISSION
OF KENTUCKY

6. Switched Access Service (Cont'd)

6.4 Rate Regulations

This section contains the specific regulations governing the rates and charges that apply for Switched Access Service.

6.4.1 Description and Application of Rates and Charges

There are two types of rates and charges that apply to Switched Access Service; recurring (usage and flat rates) and nonrecurring charges. These rates and charges are applied differently to the various rate elements as set forth in (C) following.

(A) Recurring Rates

(1) Usage rates for Switched Access Service are rates that apply on a per minute basis or a per call basis. Access minute charges and per call charges are accumulated over a monthly period.

(2) Flat Rates for Switched Access Service are rates that apply on a per month per rate element basis.

(B) Nonrecurring Charges

Nonrecurring charges are one-time charges that apply for a specific work activity (i.e., installation or change to an existing service). The types of nonrecurring charges that apply for Switched Access Service are: installation of service, Interim NXX Translation optional feature and service rearrangements and Flexible Automatic Number Identification optional feature. These charges, with the exception of the Interim NXX Translation optional feature, are in addition to the Access Order Charge as specified in 17.4.1(A) following.

(1) Installation of Service

When the Telephone Company has identified in NECA Tariff F.C.C. No. 4, Wire Center Information that it has not received a bona fide request for Direct Trunked Transport, a nonrecurring Installation per Line or Trunk Charge as set forth in 17.2.1(E) following applies to each Switched Access Service installed. For FGA, which is ordered on a per line basis, and for FGB, FBC and FGD, which is ordered on a per trunk basis, the charge is applied on a per line or trunk basis respectively. For FGC and FGD, which are ordered on a busy hour minutes of capacity basis, the charge is also applied on a per trunk basis but the charge applies only when the capacity ordered requires the installation or activation of an additional trunk(s) which is uniquely identified for the sole use of the ordering customer.

TARIFF BRANCH
RECEIVED
7/17/2006
PUBLIC SERVICE
COMMISSION
OF KENTUCKY

INTRASTATE ACCESS SERVICES TARIFF

6. Switched Access Service (Cont'd)

6.4 Rate Regulations (Cont'd)

6.4.1 Description and Application of Rates and Charges (Cont'd)

(B) Nonrecurring Charges (Cont'd)

(1) Installation of Service (Cont'd)

For Entrance Facilities, a Local Transport nonrecurring installation charge, as set forth in 17.2.1(A) following, will be applied at the serving wire center for each Entrance Facility installed. This charge is not applied when the Telephone Company has identified in NECA Tariff F.C.C. No. 4 Wire Center Information that it has not received a bona fide request for Direct Trunked Transport.

For Direct Trunked Transport ordered to the end office, a Local Transport nonrecurring trunk activation charge, as set forth in 17.2.1(D) following, will be applied at the end office on a per order basis for each group of 24 Direct Trunked Transport trunks or fraction thereof that is activated at the end office.

For Direct Trunked Transport ordered to the access tandem, a Local Transport nonrecurring trunk activation charge, as set forth in 17.2.1(D) following, will be applied at the access tandem on a per order basis for each group of 24 Direct Trunked Transport trunks or fraction thereof that is activated at the access tandem.

For Tandem Switched Transport, a Local Transport nonrecurring trunk activation charge, as set forth in 17.2.1(D) following, will be applied at the access tandem on a per order basis for each group of 24 dedicated trunks or fraction thereof that is activated at the access tandem.

A maximum of 24 trunks can be activated on a DS1 facility and a maximum of 672 trunks can be activated on a DS3 facility.

For example, if a customer orders a DS1 Entrance Facility and requests activation of 18 of the available circuits, the customer will be charged one Local Transport High Capacity DS1 Installation nonrecurring charge at the serving wire center and one Direct Trunked Transport Activation nonrecurring charge at the end office. If at a later date the customer requests the activation of three more circuits, the customer will then be charged an additional Direct Trunked Transport Activation nonrecurring charge. These charges are in addition to the Access Order Charge as specified in 17.4.1(A) following.

TARIFF BRANCH
RECEIVED
7/17/2006
PUBLIC SERVICE
COMMISSION
OF KENTUCKY

6. Switched Access Service (Cont'd)

6.4 Rate Regulations (Cont'd)

6.4.1 Description and Application of Rates and Charges (Cont'd)

(B) Nonrecurring Charges (Cont'd)

(2) Interim NXX Translation Optional Feature

This nonrecurring charge applies to the initial order for the installation of the Interim NXX Translation optional feature with Feature Group C or Feature Group D Switched Access Service and for each subsequent order received to add or change NXX Translation codes. This charge, if applicable, applies whether this optional feature is installed coincident with or at any time subsequent to the installation of Switched Access Services. This charge is applied by the Telephone Company per order, per LATA or Market Area. When it is necessary for multiple telephone companies to provide the translation function, the nonrecurring charge is assessed only by the Telephone Company that provides the final translation function which identifies the customer's traffic and this traffic is then delivered to the customer's point of termination without any further translation.

All changes to existing services other than changes involving administrative activities and the off-hook supervisory signaling of FGA Access Services, will be treated as a discontinuance of the existing service and an installation of a new service. The nonrecurring charge described in (1) preceding will apply for this work activity. Moves that change the physical location of the point of termination are described and charged for as set forth in 6.4.4 following.

- If, due to technical limitations of the Telephone Company, a customer could not combine its Interim NXX traffic with its other trunk side Switched Access Services, no charge shall apply to combine these trunk groups when it becomes technically possible.

Administrative changes will be made without charge(s) to the customer. Administrative changes are as follows:

- Change of customer name,
- Change of customer or customer's end user premises address when the change of address is not a result of a physical relocation of equipment,
- Change in billing data (name, address, or contact name or telephone number),
- Change of agency authorization,
- Change of customer circuit identification,
- Change of billing account number,
- Change of customer test line number,
- Change of customer or customer's end user contact name or telephone number, and
- Change of jurisdiction.

TARIFF BRANCH
RECEIVED
7/17/2006
PUBLIC SERVICE
COMMISSION
OF KENTUCKY

INTRASTATE ACCESS SERVICES TARIFF

6. Switched Access Service (Cont'd)

6.4 Rate Regulations (Cont'd)

6.4.1 Description and Application of Rates and Charges (Cont'd)

(B) Nonrecurring Charges (Cont'd)

(3) Service Rearrangements (Cont'd)

Other changes made without charges to the customers are as follows:

- Changes and additions to existing Switched Access Services which are necessary due to Telephone Company initiated network reconfigurations, and required to provide the same grade of service to the customer that existed prior to the reconfiguration. Charges will apply to those changes and additions which are in excess of those required to provide the same grade of service and/or capacity. Grade of service will be as determined by industry standard engineering tables.

When a customer requests a change of trunks from Tandem-Switched Transport to Direct-Trunked Transport or from Direct-Trunked Transport to Tandem-Switched Transport, or requests to rearrange Switched Access services between lower and higher capacity facilities, (e.g., Voice Grade to/from DS1 or DS1 to/from DS3), the nonrecurring charges set forth in (1) preceding do not apply providing:

- the change is ordered anytime between July 1, 1994, December 31, 1994 and
- the change is completed no later than March 31, 1994, and
- the orders to disconnect existing trunks and to connect the new trunks are placed at the same time, and
- the number of installed trunks does not exceed the number of trunks disconnected. If the number of installed trunks exceeds the number of trunks disconnected, all nonrecurring charges will apply to the excess trunks unless the customer provides justification based upon standard engineering methods to show that the additional capacity is required to maintain the same level of service.

TARIFF BRANCH
RECEIVED
7/17/2006
PUBLIC SERVICE
COMMISSION
OF KENTUCKY

INTRASTATE ACCESS SERVICES TARIFF

6. Switched Access Service (Cont'd)

6.4 Rate Regulations (Cont'd)

6.4.1 Description and Application of Rates and Charges (Cont'd)

(B) Nonrecurring Charges (Cont'd)

(3) Service Rearrangements (Cont'd)

Changes to the point in time when the off-hook supervisory signal is provided in the originating call sequence i.e., when the off-hook supervisory signal is changed from being provided by the customer's equipment before the called party answers to being forwarded by the customer's equipment when the called party answers or vice versa, are subject to the Access Order Charge as set forth in 17.4.1(A) following.

For additions, changes or modifications to an optional feature which has a separate nonrecurring charge, that nonrecurring charge will apply.

For additions, changes, or modifications to optional features that do not have their own separate nonrecurring charges, an Access Order Charge as set forth in 17.4.1(A) following will apply (with the exception of the addition of 64 Clear Channel Capability to an existing service). When an optional feature is not required on each transmission path, but rather for an entire transmission path group, an end office or an access tandem switch, only one such charge will apply (i.e., it will not apply per transmission path).

When the 64 Clear Channel Capability optional feature is installed on an existing facility, the addition will be treated as a discontinuance and start of service and all associated non-recurring charges will apply.

For conversion of FGC and FGD trunks from multifrequency address signaling to SS7 signaling or from SS7 signaling to multifrequency address signaling, nonrecurring charges will apply as set forth in 17.2.1(C).

TARIFF BRANCH
RECEIVED
7/17/2006
PUBLIC SERVICE
COMMISSION
OF KENTUCKY

INTRASTATE ACCESS SERVICES TARIFF

6. Switched Access Service (Cont'd)

6.4 Rate Regulations (Cont'd)

6.4.1 Description and Application of Rates and Charges (Cont'd)

(C) Application of Rates

Rates are applied either as premium rates or non-premium rates.

The application of these rates is dependent upon the Feature Group, type of Entrance Facility, type of transport (e.g., Direct Trunked Transport, Tandem Switched Transport, type of Multiplexing) and the availability of equal access capabilities in the end office to which the service is provided.

The following rules provide the basis for applying the rates and charges:

(1) Premium Rates

Premium rates apply to all FGC access minutes when the service is provided to customers which furnish intrastate MTS/WATS, to all access minutes that originate or terminate at end offices equipped with equal access (i.e., FGD) capabilities, and to Direct Transport Services. Premium rates also apply to FGB and FGD access minutes that originate or terminate at a Wireless Switching Center (WSC) that is directly connected to a Telephone Company access tandem office. In addition, premium rates apply to FGA and FGB access minutes when utilized in the provision of MTS/WATS service or when routed over FGD facilities at an end office or access tandem.

In addition, premium rates always apply to the following Local Transport rate elements:

- Entrance Facility
- Direct Trunked Facility
- Direct Trunked Termination
- Multiplexing
- Tandem Switched Facility
- Tandem Switched Termination
- Tandem Switching

.

TARIFF BRANCH
RECEIVED
7/17/2006
PUBLIC SERVICE
COMMISSION
OF KENTUCKY

INTRASTATE ACCESS SERVICES TARIFF

6. Switched Access Service (Cont'd)

6.4 Rate Regulations (Cont'd)

6.4.1 Description and Application of Rates and Charges (Cont'd)

(C) Application of Rates (Cont'd)

(2) Non-premium Rates (Cont'd)

Non-premium rates do not apply to the following Local Transport rate elements:

- Entrance Facility
- Direct Trunked Facility
- Direct Trunked Termination
- Multiplexing
- Tandem Switched Facility
- Tandem Switched Termination
- Tandem Switching

Non-premium rates (i.e., discounted access minute rates) apply to all FGA and FGB access minute (measured or assumed) originating or terminating in an end office which is not equipped with equal access capabilities. Non-premium rates do not apply to FGA and FGB access minutes when utilized in the provision of MTS/WATS service.

In addition, non-premium rates apply to FGC access minutes originating in an end office which is not equipped with equal access capabilities when the FGC service is used in conjunction with the Interim NXX Translation optional feature or 800 Data Base services by customers who do not furnish intrastate MTS/WATS.

Non-Premium rates do not apply to FGB ADA access minutes.

TARIFF BRANCH
RECEIVED
7/17/2006
PUBLIC SERVICE
COMMISSION
OF KENTUCKY

INTRASTATE ACCESS SERVICES TARIFF

6. Switched Access Service (Cont'd)

6.4 Rate Regulations (Cont'd)

6.4.1 Description and Application of Rates and Charges (Cont'd)

(C) Application of Rates (Cont'd)

(3) Abbreviated Dialing Arrangement (ADA)

At end offices that are equipped with equal access capabilities, premium rates apply to all FGB with ADA access minutes.

At end offices that are not equipped with equal access capabilities:

- Premium rates multiplied by the ADA rate factor set forth in 17.2.4 following apply to the following FGB rate elements:

- Local Switching
- Information Surcharge
- Residual Interconnection Charge
- Local Transport Facility and Local Transport Termination, (when the Telephone Company has identified in NECA Tariff F.C.C. No. 4 Wire Center Information that it has not received a bona fide request for Direct Trunked Transport).

- Premium rates apply to the following FGB rate elements with ADA access minutes:

- Entrance Facility
- Direct Trunked Termination
- Directed Trunked Facility
- Tandem Switched Termination
- Tandem Switched Facility
- Tandem Switching
- Multiplexing

TARIFF BRANCH
RECEIVED
7/17/2006
PUBLIC SERVICE
COMMISSION
OF KENTUCKY

INTRASTATE ACCESS SERVICES TARIFF

6. Switched Access Service (Cont'd)

6.4 Rate Regulations (Cont'd)

6.4.1 Description and Application of Rates and Charges (Cont'd)

(C) Application of Rates (Cont'd)

(4) Transition Billing Arrangement

When FGA, or FGB Switched Access Service, except as set forth in (1) preceding, provided to an entry switch (i.e., dial tone office for FGA and access tandem for FGB) has usage originating from and/or terminating at both end offices that have been converted to equal access and end offices that have not been converted, the premium and non-premium transitional rates will apply in the following manner:

(a) All access minutes that originate from or terminate at the equal access end office(s) will be billed at premium rates. Access minutes that originate from or terminate at end offices not equipped with equal access capabilities, hereinafter referred to as non-premium access minutes, will continue to be billed at non-premium rates. Non-premium rates will apply as follows depending on the type of service.

(i) For FGA and FGB services, the number of non- premium access minutes to be billed at non-premium rates is derived by subtracting the number of premium rated access minutes from the total number of access minutes.

(ii) Premium access minutes will be determined as set forth in (b) following.

(b) The number of access minutes to be rated as premium access minutes is determined as follows:

(i) Where end office specific usage data is available, premium rates apply to the measured access minutes originating from or terminating at the equal access end office(s).

(ii) Where end office specific usage data is not available for originating and/or terminating FGA or FGB, the total originating and/or terminating usage will be measured or assumed usage at the entry switch as set forth respectively in 6.5.4 and 6.6.4 following. Originating and/or terminating usage will then be apportioned between premium and non-premium access minutes.

TARIFF BRANCH
RECEIVED
7/17/2006
PUBLIC SERVICE
COMMISSION
OF KENTUCKY

6. Switched Access Service (Cont'd)

6.4 Rate Regulations (Cont'd)

6.4.1 Description and Application of Rates and Charges (Cont'd)

(C) Application of Rates (Cont'd)

(4) Transition Billing Arrangement (Cont'd)

(b) (Cont'd)

(ii) (Cont'd)

Such apportionment will be based on the ratio of the number of subscriber lines in the access area (i.e., local calling areas for FGA originating minutes, LATA for FGA terminating minutes and end offices subtending the access tandem for FGB minutes) of the first point of switching that are served by equal access end offices to the total number of subscriber lines in that access area. The ratio thus developed is applied to the total measured or assumed originating FGA usage, terminating FGA usage, originating FGB usage or terminating FGB usage, as applicable, to determine the usage to be billed at premium rates, unless adjusted as set forth in (iii) following.

The ratios used to calculate the premium usage will be determined on a quarterly basis. The ratios to be used for the succeeding quarter will be provided to the customer with the last bill rendered in the quarter or mailed separately within five working days after the first day of the new quarter (i.e., January, April, July and October).

For purposes of administering this provision: (1) subscriber lines are defined as exchange service lines, Centrex lines and Centrex-type lines provided by the Telephone Company under its local and/or general exchange service tariff; (2) the access area is defined as the local calling area of the dial tone office for originating FGA, the entire LATA for terminating FGA, and all end offices subtending the access tandem for originating and terminating FGB; and (3) the local calling area of the dial tone office is as defined in the Telephone Company's local and/or general exchange service tariff.

TARIFF BRANCH
RECEIVED
7/17/2006
PUBLIC SERVICE
COMMISSION
OF KENTUCKY

6. Switched Access Service (Cont'd)

6.4 Rate Regulations (Cont'd)

6.4.1 Description and Application of Rates and Charges (Cont'd)

(C) Application of Rates (Cont'd)

(4) Transition Billing Arrangement (Cont'd)

(b) (Cont'd)

(iii) Where FGD Switched Access Service is provided to a customer in an end office(s) where that customer's FGA or FGB premium access minutes have been determined in accordance with (ii) preceding, such premium access minutes will be adjusted in the following manner. For each FGD access minute originating from or terminating at that end office, excluding those FGD minutes of use associated with Operator Transfer Service, the originating or terminating FGA or FGB premium access minutes determined as set forth in (ii) preceding will be reduced on a one for one basis, but in no event shall the reduction exceed the total number of FGA or FGB premium access minutes originating from or terminating at that end office. For each FGA or FGB premium minute of use reduction in either the originating or terminating direction, a corresponding originating or terminating non- premium minute of use will be apportioned to those end offices in the access area that are non-equal. Such apportionment will be based upon a ratio of the number of subscriber lines in each non- equal end office to the total subscriber lines that are served by all non-equal end offices in the access area. The customer will be billed for the revised number of premium or non-premium access minutes.

(5) Unmeasured FGA and FGB Access Services

Where originating and/or terminating measurement capability does not exist for Feature Group A or Feature Group B Switched Access Services provided to the first point of switching, the number of access minutes that will be assumed are as set forth following in 6.5.4 and 6.6.4 respectively.

(6) Notice of Equal Access Conversion

The Telephone Company will provide written notification to all access customers of record within a particular LATA that an end office in that LATA is scheduled to be converted to an equal access end office. This notification will be sent, via certified U.S. Mail, to each customer of record in the LATA where the conversion is scheduled to occur, at least six months in advance of the conversion date.

The customer will have the choice of converting all or part of the existing services to equal access (i.e., Feature Group D) or retaining the existing services. The conversion of existing services will be at no charge provided the order to convert such services to Feature Group D is received as set forth in 6.4.3 following. Premium rates will apply to the total access minutes beginning on the actual conversion date, whether the customer chooses to convert to FGD or retain existing services.

TARIFF BRANCH
RECEIVED
7/17/2006
PUBLIC SERVICE
COMMISSION
OF KENTUCKY

6. Switched Access Service (Cont'd)

6.4 Rate Regulations (Cont'd)

6.4.1 Description and Application of Rates and Charges (Cont'd)

(C) Application of Rates (Cont'd)

(7) Common Channel Signaling/Signaling System 7 (CCS/SS7) Network Connection Service

The CCS/SS7 Network Connection is comprised of a Signaling Mileage Facility charge, a Signaling Mileage Termination charge, a Signaling Entrance Facility charge, and a Signaling Transfer Point (STP) Port charge.

The Signaling Mileage Facility charge is assessed on a per facility per mile basis. The Signaling Mileage Termination charge is assessed on a per termination basis (i.e., at each end of the Signaling Mileage Facility). When the Signaling Mileage Facility mileage measurement is zero, Signaling Mileage Termination charges do not apply.

The Signaling Entrance Facility charge is assessed on a per facility basis for the connection between the customer's designated premises (Signaling Point of Interface) and the serving wire center of that premises.

The STP Port charge is assessed on a per port basis for each termination of a Signaling Mileage Facility at an STP.

(8) 800 Data Base Access Service

A Basic Query or Vertical Feature Query charge applies for each completed query that is returned from the 800 data base identifying the customer to whom the call will be delivered whether or not the actual call is delivered to the customer. The query is considered completed when the appropriate call routing information is returned to the Service Switching Point (SSP) that launched the query. Query charges, as set forth in 17.2.2(B), will only be applied by those companies whose wire centers are identified as assessing query charges in the NATIONAL EXCHANGE CARRIER ASSOCIATION, INC. TARIFF F.C.C. NO. 4.

TARIFF BRANCH
RECEIVED
7/17/2006
PUBLIC SERVICE
COMMISSION
OF KENTUCKY

6. Switched Access Service (Cont'd)

6.4 Rate Regulations (Cont'd)

6.4.1 Description and Application of Rates and Charges (Cont'd)

(C) Application of Rates (Cont'd)

(8) 800 Data Base Access Service (Cont'd)

When Feature Group C or Feature Group D switched access service is used for the provision of 800 Data Base Access Service and the total minutes of use and/or count of queries can be determined for each customer at a tandem or SSP but can not be determined by individual end office, an allocation method will be utilized to determine minutes of use and/or queries by end office and customer. For each end office a ratio will be developed and applied against the total minutes of use and/or count of queries for a given customer as determined by the tandem or SSP. These ratios will be developed by dividing the unidentified originating 800 series minutes of use at an end office by the total unidentified originating minutes of use in all end offices subtending the tandem or SSP. For example, assume:

- Three end offices (EO-1, EO-2, and EO-3) subtend a tandem

EO-1 measures 2,000 minutes of 800 use
EO-2 measures 3,000 minutes of 800 use
EO-3 measures 5,000 minutes of 800 use
10,000 TOTAL

- The tandem delivers 800 usage to two customers:

IC-A has 4,000 minutes of use
IC-B has 6,000 minutes of use

- The allocation of use to be billed by EO-1 are

800 to IC-A (20% X 4,000)
1,200 to IC-B (20% X 6,000)
2,000 TOTAL

TARIFF BRANCH
RECEIVED
7/17/2006
PUBLIC SERVICE
COMMISSION
OF KENTUCKY

INTRASTATE ACCESS SERVICES TARIFF

6. Switched Access Service (Cont'd)

6.4 Rate Regulations (Cont'd)

6.4.2 Minimum Monthly Charge

Switched Access Service is subject to a minimum monthly charge. The minimum charge applies for the total capacity provided. The minimum monthly charge is calculated as follows.

For usage rated Local Transport, Local Switching and Information Surcharge rate elements, the minimum monthly charge is the sum of the recurring charges set forth in 17.2.2 and 17.2.3 following for either the actual measured usage or the assumed usage prorated to the number of days or major fraction of days based on a 30 day month.

For flat rated Local Transport rate elements, the minimum monthly charge is the sum of the recurring charges set forth in 17.2.2 following prorated to the number of days or major fraction of days on a 30 day month.

6.4.3 Change of Switched Access Service Arrangements

Changes from one type of Feature Group to another will be treated as a discontinuance of one type of service and a start of another. Nonrecurring charges will apply, with one exception. When a customer upgrades a Feature Group A or B service to a Feature Group D service and when Feature Group C is upgraded to Feature Group D coincident with the availability of Feature Group D in an end office, the nonrecurring charges associated with the equal access conversion will not apply. Nonrecurring charges for other associated service requests, (e.g., a simultaneous change from multifrequency address signaling to SS7 signaling) will apply. Minimum period obligations will not change, i.e., the time elapsed in the existing minimum period obligation will be credited to the minimum period obligations for Feature Group D service, subject to the following limitations.

In order to avoid the imposition of nonrecurring charges a customer which is a participant in the presubscription allocation process (i.e., is on the presubscription ballot) must:

- submit its order to disconnect Feature Group A and/or B within 30 days after the date the results of the final allocation of customers in an end office are actually received by the customer, and

- make the effective date for disconnection of the Feature Group A and/or B Access Services no later than 60 days after the final allocation results are received by the customer.

A customer which is not a participant in the allocation process (i.e., is not on the presubscription ballot) is subject to the same rules preceding. The time frames for the non- participating customer(s) are the same as those which apply to the last customer to receive the results of the final allocation of customers in an end office who is a participant in the allocation process. For all other changes from one type of Feature Group to another, new minimum period obligations will be established.

TARIFF BRANCH
RECEIVED
7/17/2006
PUBLIC SERVICE
COMMISSION
OF KENTUCKY

INTRASTATE ACCESS SERVICES TARIFF

6. Switched Access Service (Cont'd)

6.4 Rate Regulations (Cont'd)

6.4.4 Moves

A move involves a change in the physical location of one of the following:

- The point of termination at the customer's premises
- The customer's designated premises

The charges for the move are dependent on whether the move is to a new location within the same building or to a different building.

(A) Moves Within the Same Building

When the move is to a new location within the same building, the charge for the move will be an amount equal to one half of the installation nonrecurring charge for the capacity affected. This charge is in addition to the Access Order Charge as specified in 17.4.1(A) following. There will be no change in the minimum period requirements.

(B) Moves to a Different Building

Moves to a different building will be treated as a discontinuance and start of service and all associated nonrecurring charges will apply. New minimum period requirements will be established for the new service. The customer will also remain responsible for satisfying all outstanding minimum period charges for the discontinued service.

6.4.5 Local Information Delivery Services

Calls over Switched Access Service in the terminating direction to certain community information services will be rated under the applicable rates for Switched Access Service as set forth in 17.2 following. In addition, the charges per call as specified under the Telephone Company's local and/or general exchange service tariffs, e.g., 976 (DIAL-IT) Network Services, will also apply.

TARIFF BRANCH
RECEIVED
7/17/2006
PUBLIC SERVICE
COMMISSION
OF KENTUCKY

6. Switched Access Service (Cont'd)

6.4 Rate Regulations (Cont'd)

6.4.6 Mileage Measurement

The mileage to be used to determine the monthly rate for Local Transport is calculated on the airline distance between the end office switch, which may be a Remote Switching Module, where the call carried by Local Transport originates or terminates at the customer's serving wire center. When Tandem Switched Transport or Direct Trunked Transport is ordered between the serving wire center and the end office, mileage is normally measured in one segment from the serving wire center to the end office. When Direct Trunked Transport is ordered between a serving wire center and a tandem and Tandem Switched Transport is ordered between the tandem and the end office, mileage is calculated separately for each segment. Exceptions to those methods are as set forth in (B) through (I) following. For SS7 signaling, the mileage to be used to determine the monthly rate for the Signaling Mileage Facility is calculated on the airline distance between the serving wire center associated with the customer's designated premises (Signaling Point of Interface) and the Telephone Company wire center providing the STP Port.

Where applicable, the V&H coordinates method is used to determine mileage. This method is set forth in the NATIONAL EXCHANGE CARRIER ASSOCIATION, INC. TARIFF F.C.C. NO. 4 for Wire Center Information (V&H coordinates).

Mileage rates are as set forth in 17.2.2 following. To determine the rate to be billed, first compute the airline mileage using the V&H coordinates method. If the calculation results in a fraction of a mile, always round up to the next whole mile before determining the mileage and applying the rates. Then multiply the mileage by the appropriate rate.

Exceptions to the mileage measurement rules are as follows:

(A) Reserved For Future Use

(B) Feature Group A - Originating Usage

Direct Trunked Transport mileage for premium and non-premium rated access minutes in the originating direction over Feature Group A Switched Access Service will be calculated on an airline basis, using the V&H coordinates method. The mileage measurement will be between the first point of switching (end office switch where the Feature Group A switching dial tone is provided) and the customer's serving wire center for the Switched Access Service provided. This exception does not apply to access minutes originating and/or terminating in an Extended Area Service area as set forth in 6.4.1(C)(7) preceding. Extended Area Service area (PEC/SEC) mileage measurement exceptions are found in (D) following.

Local Transport Facility mileage is calculated in the same manner for FGA when the Telephone Company has identified in NECA Tariff F.C.C. No. 4, Wire Center Information that it has not received a bona fide request for Direct Trunked Transport and therefore applies Local Transport Facility rates.

TARIFF BRANCH
RECEIVED
7/17/2006
PUBLIC SERVICE
COMMISSION
OF KENTUCKY

6. Switched Access Service (Cont'd)

6.4 Rate Regulations (Cont'd)

6.4.6 Mileage Measurement (Cont'd)

(C) Feature Group A Terminating Usage

The Local Transport mileage for terminating Feature Group A Switched Access Service when the Telephone Company provides Direct Trunked Transport will be measured in two segments. Direct Trunked Transport mileage will be measured between the customer's serving wire center and the first point of switching (i.e., the end office switch where the Feature Group A switching dial tone is provided). Tandem Switched Transport mileage will be measured between the first point of switching and the terminating end office.

(D) Feature Groups B, C and D - Alternate Traffic Routing

When the Alternate Traffic Routing optional feature is provided with Feature Groups B, C or D, the Local Transport access minutes will be apportioned between the two trunk groups used to provide this feature. Such apportionment will be made using: (1) actual minutes of use if available, (2) standard Telephone Company traffic engineering methodology and will be based on the last trunk CCS desired for the high usage group, as described in 6.10.1(L) following (Alternate Traffic Routing), and the total busy hour minutes of capacity ordered to the end office, when the feature is provided at an end office switch, or to the subtending end offices when the feature is provided at an access tandem switch, or (3) an apportionment mutually agreed to by the Telephone Company and the customer. This apportionment will serve as the basis for Local Transport calculation.

(E) Feature Group C - Multiple CDPs

When terminating Feature Group C Switched Access Service is provided from multiple customer designated premises to an end office not equipped with measurement capabilities, the total Local Transport access minutes for that end office will be apportioned among the trunk groups accessing the end office on the basis of the individual busy hour minutes of capacity ordered for each of those trunk groups. This apportionment will serve as the basis for Local Transport mileage calculation.

(F) Feature Groups A, B, C and D - WATS

The Local Transport Facility for Feature Groups A, B, C and D Switched Access Service connected with Special Access Service at a WATS Serving Office (when measured access minutes of use are used) or between the Feature Group A entry switch (when assumed minutes of use are used) and the serving wire center for the customer designated premises.

TARIFF BRANCH
RECEIVED
7/17/2006
PUBLIC SERVICE
COMMISSION
OF KENTUCKY

INTRASTATE ACCESS SERVICES TARIFF

6. Switched Access Service (Cont'd)

6.4 Rate Regulations (Cont'd)

6.4.6 Mileage Measurement (Cont'd)

(G) Feature Groups B and D - WSCs Directly Interconnected to Access Tandems

The Local Transport mileage for Feature Groups B and D switched access service provided to Wireless Switching Centers (WSCs) directly interconnected to a Telephone Company access tandem office will be determined on an airline basis, using the V&H coordinate method. The mileage will be measured between the customer's serving wire center and the Telephone Company access tandem office to which the WSC is interconnected.

(H) Feature Groups B, C, and D - Remote Offices

When the Telephone Company provides Direct Trunked Transport the Local Transport mileage for Feature Groups B, C, and D Switched Access Service provided to a Remote Office will be measured in multiple segments.

When the facility is directly trunked to the Host Office, Direct Trunked Facility mileage will be measured between the customer's serving wire center and the Host Office, and Tandem Switched Facility mileage will be measured between the Host Office and the Remote Office. The Tandem Switching charge will not apply.

When the facility is directly trunked to a tandem, Direct Trunked Facility will be measured from the Serving Wire Center to the tandem, Tandem Switched Facility will be measured from the tandem to the host, and another segment of Tandem Switched Facility will be measured from the host to the remote. A Tandem Switching charge will be applicable at the tandem.

When service to the remote is ordered as only Tandem Switching Facility, mileage will be separately measured between the serving wire center and the host and between the host and the end office. The Tandem Switching charge will be applicable at the tandem.

(I) Use of Telephone Company Hub

When multiplexing is performed at Telephone Company Hubs, mileage is computed and rates applied separately for each segment of the Local Transport Direct Trunked Facility (i.e., customer serving wire center to Hub, Hub to Hub, and/or Hub to end office).

TARIFF BRANCH
RECEIVED
7/17/2006
PUBLIC SERVICE
COMMISSION
OF KENTUCKY

6. Switched Access Service (Cont'd)

6.4 Rate Regulations (Cont'd)

6.4.7 Mixed Use

Mixed use occurs when Switched Access Service and Special Access Service are provided over the same High Capacity service through a common interface. The regulations governing the provision of Mixed Use Facilities are set forth in 5.2.4 preceding and 7.2.7 following.

The Telephone Company will designate the first point(s) of switching and routing to be used where equal access traffic is provided through a centralized equal access arrangement. Those Telephone Company offices providing equal access through centralized arrangements are identified in NATIONAL EXCHANGE CARRIER ASSOCIATION, INC. TARIFF F.C.C. NO. 4.

6.4.8 Message Unit Credit for Feature Group A

Calls from end users to the seven digit local telephone numbers associated with Feature Group A Switched Access Service are subject to Telephone Company local and/or general exchange service tariff charges (including message unit and toll charges as applicable). The monthly bills rendered to customers for their Feature Group A Switched Access Service will include a credit to reflect any message unit charges collected from their end users under the Telephone Company's local and/or general exchange service tariffs. When the customer is provided FGA service where measurement capability does not exist, the credit will apply to access minutes not to exceed the assumed originating access minutes. No credit will apply for any terminating FGA access minutes. The message unit credit for originating access minutes will be based on the generally applicable message unit charges of the Telephone Company.

6.4.9 Application of Rates for Feature Group A Extension Service

Feature Group A Switched Access Service is available with extensions, i.e., additional terminations of the service at different customer designated premises in the same LATA as the FGA dial tone office or a LATA other than the LATA where the FGA dial tone office is located. Feature Group A extensions within the same LATA and same state as the dial tone office are provided and charged for under the Telephone Company's local and/or general exchange service tariffs. Feature Group A extensions located in a LATA other than the LATA where the dial tone office is located or in a different state in the same LATA as the dial tone office are provided and charged as Special Access Service. The rate elements which apply are: A Voice Grade Channel Termination, Channel Mileage, if applicable, and Signaling Capability (optional features and functions), if applicable. All appropriate monthly rates and nonrecurring charges set forth in 17.3.4 following will apply.

TARIFF BRANCH
RECEIVED
7/17/2006
PUBLIC SERVICE
COMMISSION
OF KENTUCKY

6. Switched Access Service (Cont'd)

6.5 Description and Provision of Feature Group A (Cont'd)

6.5.1 Description

(A) FGA Access provides line side access to Telephone Company end office switches with an associated seven digit local telephone number for the customer's use in originating communications from and terminating communications to an Interexchange Carrier's Intrastate Service or a customer - provided intrastate communications capability. The customer must specify the Interexchange Carrier to which the FGA service is connected or, in the alternative, specify the means by which the FGA access communications is transported to another LATA. Special Access Services utilized for connection with FGA at Telephone Company designated WATS Serving Offices as set forth in Section 7. following may be ordered separately by a customer other than the customer which orders the FGA Switched Access Service for the provision of WATS-type services. Special Access Services are ordered as set forth in 5.2 preceding.

(B) FGA Switching is provided at all end office switches. At the option of the customer, FGA is provided on a single or multiple line group basis and is arranged for originating calling only, terminating calling only, or two-way calling.

(C) FGA provides a line side termination at the first point of switching (dial tone office). The line side termination will be provided with either ground start supervisory signaling or loop start supervisory signaling. The type of signaling is at the option of the customer.

(D) The Telephone Company shall select the first point of switching, within the selected LATA, at which the line side termination is to be provided unless the customer requests a different first point of switching and Telephone Company facilities and measurement capabilities, where necessary, are available to accommodate such a request.

(E) A seven digit local telephone number assigned by the Telephone Company is provided for access to FGA switching in the originating direction. The seven digit local telephone number will be associated with the selected end office switch and is of the form NXX-XXXX.

If the customer requests a specific seven digit telephone number that is not currently assigned, and the Telephone Company can, with reasonable effort, comply with that request, the requested number will be assigned to the customer.

(F) FGA switching, when used in the terminating direction, is arranged with dial tone start-dial signaling. When used in the terminating direction FGA switching may, at the option of the customer, be arranged for dial pulse or dual tone multifrequency address signaling, subject to availability of equipment at the first point of switching. When FGA switching is provided in a hunt group or uniform call distribution arrangement, all FGA switching will be arranged for the same type of address signaling.

TARIFF BRANCH
RECEIVED
7/17/2006
PUBLIC SERVICE
COMMISSION
OF KENTUCKY

6. Switched Access Service (Cont'd)

6.5 Description and Provision of Feature Group A (Cont'd)

6.5.1 Description (Cont'd)

(G) No address signaling is provided by the Telephone Company when FGA Switching is used in the originating direction. Address signaling in such cases, if required by the customer, must be provided by the customer's end user using inband tone signaling techniques. Such inband tone address signals will not be regenerated by the Telephone Company and will be subject to the ordinary transmission capabilities of the Local Transport provided.

(H) FGA switching, when used in the terminating direction, may be used to access valid NXXs in the LATA, local operator service (0- and 0+), Directory Assistance (411 where available and 555-1212), emergency reporting service (911 where available), exchange telephone repair (611 where available), time or weather announcement services of the Telephone Company, community information services of an information service provider, and other customers' services (by dialing the appropriate digits).

Charges for FGA terminating calls requiring operator assistance or calls to 611 or 911 will only apply where sufficient call details are available. Additional non-access charges will also be billed on a separate account for (1) an operator surcharge, as set forth in the local exchange tariffs, for local operator assistance (0- and 0+) calls, (2) calls to certain community information services, for which rates are applicable under Telephone Company exchange service tariffs, e.g., 976 (DIAL-IT) Network Services, and, (3) calls from a FGA line to another customer's service in accordance with that customer's applicable service rates when the Telephone Company performs the billing function for that customer.

(I) When a FGA switching arrangement for an individual customer (a single line or entire hunt group) is discontinued at an end office, an intercept announcement is provided. This arrangement provides, for a limited period of time, an announcement that the service associated with the number dialed has been disconnected.

(J) FGA will be provisioned over an Entrance Facility from the customer's premises to the customer's serving wire center.

FGA service, when used in the originating direction, will be provisioned as Direct Trunked Transport from the first point of switching (i.e., the end office switch where FGA switching dial tone is provided) to the customer's serving wire center.

FGA service, when used in the terminating direction, will be provisioned as Direct Trunked Transport from the customer's serving wire center to the first point of switching and provisioned as Tandem Switched Transport from the first point of switching to the terminating end office. The Tandem Switching charge will not apply.

TARIFF BRANCH
RECEIVED
7/17/2006
PUBLIC SERVICE
COMMISSION
OF KENTUCKY

INTRASTATE ACCESS SERVICES TARIFF

6. Switched Access Service (Cont'd)

6.5 Description and Provision of Feature Group A (Cont'd)

6.5.2 Optional Features

Following are the various nonchargeable optional features that are available in lieu of, or in addition to, the standard features provided with Feature Group A. They are provided as Common Switching, Transport Termination or Local Transport options.

(A) Common Switching Options

Descriptions of the common switching optional features are set forth in 6.10 following.

(1) Call Denial on Line or Hunt Group

(2) Service Code Denial on Line or Hunt Group

(3) Hunt Group Arrangement

(4) Uniform Call Distribution Arrangement

(5) Nonhunting Number for Use with Hunt Group or Uniform Call Distribution Arrangement

(6) Band Advance Arrangement for Use with Special Access Service Utilized in the Provision of WATS-Type Services

(7) Hunt Group Arrangement for Use with Special Access Service Utilized in the Provision of WATS-Type Services

(8) Uniform Call Distribution Arrangement for Use with Special Access Service Utilized in the Provision of WATS-Type Services

(9) Nonhunting Number Associated with a Hunt Group Arrangement or Uniform Call Distribution Arrangement for Use with Special Access Service Utilized in the Provision of WATS-Type Services

TARIFF BRANCH
RECEIVED
7/17/2006
PUBLIC SERVICE
COMMISSION
OF KENTUCKY

INTRASTATE ACCESS SERVICES TARIFF

6. Switched Access Service (Cont'd)

6.5 Description and Provision of Feature Group A (Cont'd)

6.5.2 Optional Features (Cont'd)

(B) Transport Termination

(1) Two-way operation with dial pulse address signaling and loop start supervisory signaling

(2) Two-way operation with dial pulse address signaling and ground start supervisory signaling

(3) Two-way operation with dial tone multifrequency address signaling and loop start supervisory signaling

(4) Two-way operation with dial tone multifrequency address signaling and ground start supervisory signaling

(5) Terminating operation with dial pulse address signaling and loop start supervisory signaling

(6) Terminating operation with dial pulse address signaling and ground start supervisory signaling

(7) Terminating operation with dual tone multifrequency address signaling and loop start supervisory signaling

(8) Terminating operation with dual tone multifrequency address signaling and ground start supervisory signaling

(9) Originating operation with loop start supervisory signaling

(10) Originating operation with ground start supervisory signaling

(C) Local Transport Options

(1) Supervisory Signaling (as set forth in 15.1.1(E) following)

(2) Customer Specified Entry Switch Receive Level (as set forth in 15.1.1(E) following)

TARIFF BRANCH
RECEIVED
7/17/2006
PUBLIC SERVICE
COMMISSION
OF KENTUCKY

INTRASTATE ACCESS SERVICES TARIFF

6. Switched Access Service (Cont'd)

6.5 Description and Provision of Feature Group A (FGA) (Cont'd)

6.5.3 Optional Features Provided In Local Tariffs

Certain other features which may be available in connection with Feature Group A (e.g., Speed Calling, Remote Call Forwarding, Bill Number Screening, IntraLATA extensions) are provided under the Telephone Company's local and/or general exchange service tariffs.

6.5.4 Measuring Access Minutes

Customer Feature Group A traffic to end offices will be measured (i.e., recorded) or assumed by the Telephone Company at end office switches. Originating and terminating calls will be measured (i.e., recorded) or assumed by the Telephone Company to determine the basis for computing chargeable access minutes. In the event the customer message detail is not available because the Telephone Company lost or damaged tapes or incurred recording system outages, the Telephone Company will estimate the volume of lost customer access minutes of use based on previously known values.

For terminating calls over FGA, and for originating calls over FGA (when the off-hook supervisory signal is provided by the customer's equipment before the called party answers), the measured minutes are the chargeable access minutes. For originating calls over FGA (when the off-hook supervisory signal is forwarded by the customer's equipment when the called party answers), chargeable originating access minutes are derived from recorded minutes using the same formula as set forth in 6.7.4 following for Feature Group C.

For originating calls over FGA, usage measurement begins when the originating FGA first point of switching receives an off-hook supervisory signal forwarded from the customer's point of termination. This off-hook signal may be provided by the customer's equipment before the called party answers, or forwarded by the customer's equipment when the called party answers.

The measurement of originating call usage over FGA ends when the originating FGA first point of switching receives an on-hook supervisory signal from either the originating end user's end office, indicating the originating end user has disconnected, or the customer's point of termination, which ever is recognized first by the first point of switching.

For terminating calls over FGA, usage measurement begins when the terminating FGA first point of switching receives an off-hook supervisory signal from the terminating end user's end office, indicating the terminating end user has answered. The measurement of terminating call usage over FGA ends when the terminating FGA first point of switching receives an on-hook supervisory signal from either the terminating end user's end office, indicating the terminating end user has disconnected, or the customer's point of termination, whichever is recognized first by the first point of switching.

TARIFF BRANCH
RECEIVED
7/17/2006
PUBLIC SERVICE
COMMISSION
OF KENTUCKY

INTRASTATE ACCESS SERVICES TARIFF

6. Switched Access Service (Cont'd)

6.5 Description and Provision of Feature Group A (FGA) (Cont'd)

6.5.4 Measuring Access Minutes (Cont'd)

FGA access minutes or fractions thereof, the exact value of the fraction being a function of the switch technology where the measurement is made, are accumulated over the billing period for each line or hunt group, and are then rounded up to the nearest access minute for each line or hunt group.

Assumed minutes are used for FGA services which originate or terminate in end offices not equipped with measurement capabilities and in such cases are the chargeable access minutes.

Where originating and terminating measurement capability does not exist for Feature Group A provided to the first point of switching, the number of access minutes will be assumed as set forth in 17.2.6 following.

Where measurement capability exists for either originating or terminating usage, but not both, on a line arranged for two way calling, the number of access minutes per line per month will be assumed usage, as set forth in 17.2.6 following, or the measured usage, whichever is greater. If the usage in the measured direction exceeds the assumed access minutes per line per month, no usage will be assigned in the unmeasured direction. If the measured usage is less than the assumed access minutes per line per month, the usage in the unmeasured direction will be the assumed usage, as set forth in 17.2.6 following, for that unmeasured direction except that the total of measured and assumed minutes in such instances will not exceed the total assumed usage designated for two way calling set forth in 17.2.6 following. If the total exceeds the assumed minutes set forth in 17.2.6 following, the assigned minutes shall be reduced so that the total of measured and unmeasured minutes equals the assumed minutes for two way calling set forth in 17.2.6 following.

Additionally, when the line is arranged for one way calling and there is no measurement capability for that direction, assumed originating access minutes, as set forth in 17.2.6(B) following, will be assigned for originating calling only lines and assumed terminating access minutes, as set forth in 17.2.6(C) following, will be assigned for terminating calling only lines.

TARIFF BRANCH
RECEIVED
7/17/2006
PUBLIC SERVICE
COMMISSION
OF KENTUCKY

INTRASTATE ACCESS SERVICES TARIFF

6. Switched Access Service (Cont'd)

6.5 Description and Provision of Feature Group A (FGA) (Cont'd)

6.5.4 Measuring Access Minutes (Cont'd)

The following matrix illustrates the application of assumed access minutes for FGA as set forth in 17.2.6(A), (B) and (C) following.

Service Ordered As	Can Measure Originating	Can't Measure Originating	Can Measure Terminating	Can't Measure Terminating
Originating Only	Actual	1,510	N/A	N/A
Terminating Only	N/A	N/A	Actual	2,685
Both Originating and Terminating (originating measurement greater than 4195)	Actual	N/A	N/A	0
Both Originating and Terminating (originating measurement equal or less than 4195)	Actual	N/A	N/A	0 to 2685*
Both Originating and Terminating (terminating measurement greater than 4195)	N/A	0	Actual	N/A
Both Originating and Terminating (terminating measurement equal or less than 4195)	N/A	0 to 1510*	Actual	N/A

* Sum of actual and assumed cannot exceed 4195. Reduce assumed minutes of use if necessary.

TARIFF BRANCH
RECEIVED
7/17/2006
PUBLIC SERVICE
COMMISSION
OF KENTUCKY

INTRASTATE ACCESS SERVICES TARIFF

6. Switched Access Service (Cont'd)

6.5 Description and Provision of Feature Group A (FGA) (Cont'd)

6.5.4 Measuring Access Minutes (Cont'd)

Notwithstanding the preceding, when Feature Group A is used for the provision of WATS-type service where measurement capability exists at the WATS Serving Office but not at the Feature Group A first point of switching, the measured WATS-type originating and/or terminating minutes of use shall be separately summed and compared to their respective total assumed originating and/or terminating minutes of use. The number of access minutes per line per month will be the assumed or the measured usage, whichever is greater.

6.5.5 Testing Capabilities

FGA is provided, in the terminating direction where equipment is available, with seven digit access to balance (100 type) test line and milliwatt (102 type) test line. In addition to the tests described in 6.2.4 preceding which are included with the installation of service (Acceptance Testing) and as ongoing routine testing, Additional Cooperative Acceptance Testing and Additional Manual Testing are available as set forth in 13.3.1 following.

TARIFF BRANCH
RECEIVED
7/17/2006
PUBLIC SERVICE
COMMISSION
OF KENTUCKY

INTRASTATE ACCESS SERVICES TARIFF

6. Switched Access Service (Cont'd)

6.6 Description and Provision of Feature Group B (FGB)

6.6.1 Description

(A) FGB Access, which is available to all customers, provides trunk side access to Telephone Company end office switches with an associated uniform 950-XXXX access code. FGB trunk side access is provided for the customer's use in originating communications from and terminating communications to an Interexchange Carrier's Intrastate Service or a customer provided intrastate communications capability. The customer must specify the Interexchange Carrier to which the FGB service is connected or, in the alternative, specify the means by which the FGB access communications is transported to another LATA. Special Access Services utilized for connection with FGB at Telephone Company designated WATS Serving Offices as set forth in Section 7. following may be ordered separately by a customer other than the customer which orders the FGB Switched Access Service for the provision of WATS-type services. Special Access Services are ordered as set forth in 5.2 preceding.

(B) FGB, when directly routed to an end office (i.e., provided without the use of an access tandem switch), is provided at appropriately equipped Telephone Company electronic end office switches. When provided via Telephone Company designated electronic access tandem switches, FGB switching is provided at Telephone Company electronic and electromechanical end office switches.

(C) FGB is provided as trunk side switching through the use of end office or access tandem switch trunk equipment. The switch trunk equipment is provided with wink start start-pulsing signals and answer and disconnect supervisory signaling.

(D) FGB switching is provided with multifrequency address signaling in both the originating and terminating directions. Except for FGB switching provided with the automatic number identification (ANI) or rotary dial station signaling arrangements as set forth respectively in 6.10.1(F) and 6.10.2(A) following, any other address signaling in the originating direction, if required by the customer, must be provided by the customer's end user using inband tone signaling techniques. Such inband tone address signals will not be regenerated by the Telephone Company and will be subject to the ordinary transmission capabilities of the Local Transport provided.

(E) The access code for FGB switching is a uniform access code. The form of the uniform access code is 950-XXXX. A uniform access code will be assigned to the customer for the customer's domestic communications and another will be assigned to the customer for its international communications, if required. These access codes will be the assigned access numbers of all FGB switched access service provided to the customer by the Telephone Company.

TARIFF BRANCH
RECEIVED
7/17/2006
PUBLIC SERVICE
COMMISSION
OF KENTUCKY

INTRASTATE ACCESS SERVICES TARIFF

6. Switched Access Service (Cont'd)

6.6 Description and Provision of Feature Group B (FGB) (Cont'd)

6.6.1 Description (Cont'd)

(F) The Telephone Company will establish a trunk group or groups for the customer at end office switches or access tandem switches where FGB switching is ordered. When required by technical limitations, a separate trunk group will be established for each type of FGB switching arrangement provided. Different types of FGB or other switching arrangements may be combined in a single trunk group at the option of the Telephone Company.

(G) FGB switching, when used in the terminating direction, may be used to access valid NXXs in the LATA, time or weather announcement services of the Telephone Company, community information services of an information service provider and other customers' services (by dialing the appropriate digits). When directly routed to an end office, only those valid NXX codes served by that end office may be accessed. When routed through an access tandem, only those valid NXX codes served by end offices subtending the access tandem may be accessed.

The customer will also be billed additional non-access charges for calls to certain community information services for which rates are applicable under Telephone Company exchange service tariffs, e.g., 976 (DIAL-IT) Network Service. Additionally, non-access charges will also be billed for calls from a FGB trunk to another customer's service in accordance with that customer's applicable service rates when the Telephone Company performs the billing function for that customer.

Calls in the terminating direction will not be completed to 950-XXXX access codes, local operator assistance (0- and 0+), Directory Assistance (411 and 555- 1212), service codes 611 and 911 or 101XXXX access codes. Calls will be completed to Directory Assistance (NPA-555-1212 or 555-1212) when FGB switching is combined with Directory Assistance (DA) switching. The combination of FGB Switched Access Service with DA service is provided as set forth in Section 9. following. FGB may not be switched, in the terminating direction, to Switched Access Service Feature Groups B, C and D.

TARIFF BRANCH
RECEIVED
7/17/2006
PUBLIC SERVICE
COMMISSION
OF KENTUCKY

INTRASTATE ACCESS SERVICES TARIFF

6. Switched Access Service (Cont'd)

6.6 Description and Provision of Feature Group B (FGB) (Cont'd)

6.6.1 Description (Cont'd)

(H) When all FGB switching arrangements are discontinued at an end office and/or in a LATA, an intercept announcement is provided. This arrangement provides, for a limited period of time, an announcement that the service associated with the number dialed has been disconnected.

(I) A customer who has FGB access may elect to have their FGB traffic routed over FGD trunks at the end office or access tandem. If the customer elects this option the FGB traffic will be rated at FGD rates.

(J) The Telephone Company will make available in certain Telephone Company designated end offices FGB with an Abbreviated Dialing Arrangement (ADA). Such FGB with an ADA will be provisioned in the same manner in which FGB is provisioned with the exceptions described in 6.9.2(A) following. When FGB with an ADA is made available in a non-equal access end office, the Telephone Company will continue to make FGB with an associated 950-XXXX access code available to customers at non-premium rates.

(K) For FGB switched access service to a Wireless Switching Center (WSC) directly interconnected to a Telephone Company access tandem office, the customer will be billed only the Local Transport premium rate element for the FGB usage. The mileage used to determine the monthly rate for the local transport rate element is as set forth in 6.4.6(G) preceding.

TARIFF BRANCH
RECEIVED
7/17/2006
PUBLIC SERVICE
COMMISSION
OF KENTUCKY

6. Switched Access Service (Cont'd)

6.6 Description and Provision of Feature Group B (FGB) (Cont'd)

6.6.2 Optional Features

Following are descriptions of the various nonchargeable optional features that are available in lieu of, or in addition to, the standard features provided with Feature Group B. They are set forth in (A), (B) and (C) following and are provided as Common Switching, Transport Termination and Local Transport options. Additionally, other optional features provided in local tariffs are set forth in (D) following.

(A) Common Switching Optional Features

Descriptions of the common switching optional features are set forth in 6.10 following.

(1) Automatic Number Identification (ANI)
(2) Up to 7 Digit Outpulsing of Access Digits to Customer
(3) Band Advance Arrangement for Use with Special Access Service utilized in the provision of WATS or WATS-type Services
(4) Hunt Group Arrangement for Use with Special Access Service utilized in the provision of WATS or WATS- type Services
(5) Uniform Call Distribution Arrangement for Use with Special Access Service utilized in the provision of WATS or WATS-type Services
(6) Nonhunting Number Associated with Hunt Group Arrangement or Uniform Call Distribution Arrangement for Use with Special Access Service utilized in the provision of WATS or WATS-type Services

(B) Transport Termination Options

(1) Rotary Dial Station Signaling

(C) Local Transport Options

(1) Customer Specification of Local Transport Termination
(2) Optional Supervisory Signaling
(3) Customer Specified Entry Switch Receive Level

Inasmuch as these options concern transmission levels and signaling they are set forth in 15.1.1 following.

(D) Optional Features Provided In Local Tariffs

Another feature, Bill Number Screening, which may be available in connection with FGB, is provided under the Telephone Company's local and/or general exchange service tariffs.

TARIFF BRANCH
RECEIVED
7/17/2006
PUBLIC SERVICE
COMMISSION
OF KENTUCKY

INTRASTATE ACCESS SERVICES TARIFF

6. Switched Access Service (Cont'd)

6.6 Description and Provision of Feature Group B (FGB) (Cont'd)

6.6.3 Design and Traffic Routing

For Feature Group B, the trunk directionality and traffic routing of the Switched Access Service between the customer designated premises and the entry switch are determined by the customer's order for service; except the Telephone Company will designate the first point(s) of switching and routing to be used where equal access is provided through a centralized equal access arrangement. Those Telephone Company offices providing equal access through centralized arrangements are identified in NATIONAL EXCHANGE CARRIER ASSOCIATION, INC. TARIFF F.C.C. NO. 4. Additionally, the customer may order the optional feature Customer Specification of Local Transport Termination as set forth in 15.1.1 following.

6.6.4 Measuring Access Minutes

Customer traffic to end offices will be measured (i.e., recorded) or assumed by the Telephone Company at end office switches or access tandem switches. Originating and terminating calls will be measured (i.e., recorded) or assumed by the Telephone Company to determine the basis for computing chargeable access minutes. In the event the customer message detail is not available because the Telephone Company lost or damaged tapes or incurred recording system outages, the Telephone Company will estimate the volume of lost customer access minutes of use based on previously known values.

For both originating and terminating calls over FGB the measured minutes are the chargeable access minutes.

For originating calls over FGB, usage measurement begins when the originating FGB first point of switching receives answer supervision forwarded from the customer's point of termination, indicating the customer's equipment has answered.

The measurement of originating call usage over FGB ends when the originating FGB first point of switching receives disconnect supervision from either the originating end user's end office, indicating the originating end user has disconnected, or the customer's point of termination, whichever is recognized first by the first point of switching.

For terminating calls over FGB, usage measurement begins when the terminating FGB first point of switching receives answer supervision from the terminating end user's end office, indicating the terminating end user has answered.

The measurement of terminating call usage over FGB ends when the terminating FGB first point of switching receives disconnect supervision from either the terminating end user's end office, indicating the terminating end user has disconnected, or the customer's point of termination, whichever is recognized first by the first point of switching.

TARIFF BRANCH
RECEIVED
7/17/2006
PUBLIC SERVICE
COMMISSION
OF KENTUCKY

INTRASTATE ACCESS SERVICES TARIFF

6. Switched Access Service (Cont'd)

6.6 Description and Provision of Feature Group B (FGB) (Cont'd)

6.6.4 Measuring Access Minutes (Cont'd)

FGB access minutes of fractions thereof, the exact value of the fraction being a function of the switch technology where the measurement is made, are accumulated over the billing period for each end office, and are then rounded up to the nearest access minute for each end office.

Assumed minutes are used for FGB services which originate or terminate in end offices not equipped with measurement capabilities and in such cases are the chargeable access minutes.

Where originating and terminating measurement capability does not exist for Feature Group B provided to the first point of switching, the number of access minutes will be assumed, as set forth in 17.2.6(D) following, when the trunk is arranged for two way calling.

Where measurement capability exists for either originating or terminating usage, but not both, on a trunk arranged for two way calling, the number of access minutes per trunk per month will be an assumed usage, as set forth in 17.2.6(D) following, or the measured usage, whichever is greater. If the usage in the measured direction exceeds the assumed access minutes per trunk per month, no usage will be assigned in the unmeasured direction. If the measured usage is less than the assumed access minutes per trunk per month, the usage in the unmeasured direction will be the assumed usage, as set forth in 17.2.6 following, for that unmeasured direction except that the total of measured and assumed minutes in such instances will not exceed the total assumed usage designated for two way calling set forth in 17.2.6(D) following. If the total exceeds the assumed minutes set forth in 17.2.6 following, the assigned minutes shall be reduced so that the total of measured and unmeasured minutes equals the assumed minutes for two way calling set forth in 17.2.6(D) following.

Additionally, when the trunk is arranged for one way calling and there is no measurement capability for that direction, assumed originating access minutes, as set forth in 17.2.6(E) following, will be assigned for originating calling only lines and assumed terminating access minutes, as set forth in 17.2.6(F) following, will be assigned for terminating calling only lines.

TARIFF BRANCH
RECEIVED
7/17/2006
PUBLIC SERVICE
COMMISSION
OF KENTUCKY

INTRASTATE ACCESS SERVICES TARIFF

6. Switched Access Service (Cont'd)

6.6 Description and Provision of Feature Group B (FGB) (Cont'd)

6.6.4 Measuring Access Minutes (Cont'd)

The following matrix illustrates the application of assumed access minutes for FGB as set forth in 17.2.6(D), (E) and (F) following.

Service Ordered As	Can Measure Originating	Can't Measure Originating	Can Measure Terminating	Can't Measure Terminating
Originating Only	Actual	3,132	N/A	N/A
Terminating Only	N/A	N/A	Actual	5,568
Both Originating and Terminating (originating measurement greater than 8700)	Actual	N/A	N/A	0
Both Originating and Terminating (originating measurement equal or less than 8700)	Actual	N/A	N/A	0 to 5568*
Both Originating and Terminating (terminating measurement greater than 8700)	N/A	0	Actual	N/A
Both Originating and Terminating (terminating measurement equal or less than 8700)	N/A	0 to 3132*	Actual	N/A

* Sum of actual and assumed cannot exceed 8700. Reduce assumed minutes of use if necessary.

TARIFF BRANCH
RECEIVED
7/17/2006
PUBLIC SERVICE
COMMISSION
OF KENTUCKY

INTRASTATE ACCESS SERVICES TARIFF

6. Switched Access Service (Cont'd)

6.6 Description and Provision of Feature Group B (FGB) (Cont'd)

6.6.4 Measuring Access Minutes (Cont'd)

Notwithstanding the preceding, when Feature Group B is used for the provision of WATS or WATS-type service where measurement capacity exists at the WATS Serving Office but not at the Feature Group B first point of switching, the measured WATS or WATS-type originating and/or terminating minutes of use shall be separately summed and compared to their respective total assumed originating and/or terminating minutes of use. The number of minutes per trunk per month will be the assumed or the measured usage, whichever is greater.

When Feature Group B is ordered at an access tandem and end office specific usage measurement is not available, the actual or assumed originating and/or terminating minutes of use as determined by the exchange carrier providing the access tandem will be apportioned among all subtending end offices. For each end office, such apportionment shall be based on the ratio of the total number of subscriber lines in each end office subtending the access tandem to the total number of subscriber lines associated with all end offices subtending the access tandem. For purposes of administering this regulation, subscriber lines are defined as exchange service lines, Centrex lines and Centrex-type lines provided by the telephone companies under local and/or general exchange service tariffs. The resulting ratio for each end office is then applied to the total access area originating and/or terminating minutes of use to determine originating and/or terminating minutes of use to be assigned for billing purposes to each subtending end office in the access area.

The ratio used to calculated the access minutes will be determined by the Telephone Company and provided to the customer upon his request within 15 days of the receipt of such a request.

6.6.5 Testing Capabilities

FGB is provided, in the terminating direction where equipment is available, with seven digit access to balance (100 type) test line, milliwatt (102 type) test line, nonsynchronous or synchronous test line, automatic transmission measuring (105 type) test line, data transmission (107 type) test line, loop around test line, short circuit test line and open circuit test line. In addition to the tests described in 6.2.4 preceding which are included with the installation of service (Acceptance Testing) and as ongoing routine testing, additional Cooperative Acceptance Testing, Additional Automatic Testing, and Additional Manual Testing are available as set forth in 13.3.1 following.

TARIFF BRANCH
RECEIVED
7/17/2006
PUBLIC SERVICE
COMMISSION
OF KENTUCKY

6. Switched Access Service (Cont'd)

6.7 Description and Provision of Feature Group C (FGC)

6.7.1 Description

(A) FGC Access provides trunk side access to Telephone Company end office switches for the customer's use in originating and terminating communications. Originating and terminating FGC Access is available to providers of MTS and WATS. Originating FGC Access is available to all customers when used to provide the Interim NXX Translation optional feature or 800 Data Base service. Terminating FGC Access is available to all customers other than providers of MTS and WATS when such access is used in conjunction with the provision of the Interim NXX Translation Optional Feature or 800 Data Base service, but only for purposes of testing. Existing FGC Access will be converted to Feature Group D Access when Feature Group D Access becomes available in an end office. Special Access Services utilized for connection with FGC at Telephone Company designated WATS Serving Offices as set forth in Section 7. following may be ordered separately by a customer other than the customer which orders the FGC Switched Access Service (i.e., a provider of MTS and WATS) for the provision of WATS Services. Special Access Services are ordered as set forth in 5.2 preceding.

(B) Feature Group C switching is provided at all end office switches unless Feature Group D end office switching is provided in the same office. When FGD switching is available, FGC switching will not be provided. FGC is provided at Telephone Company end office switches on a direct trunk basis or via Telephone Company designated access tandem switches. Feature Group C switching is furnished to providers of MTS and WATS. Additionally, originating Feature Group C switching is available to all customers when used to provide the Interim NXX Translation optional feature or 800 Data Base service. Terminating Feature Group C switching is available to all customers who are not MTS and WATS providers only when such terminating access is for purposes of testing Feature Group C facilities provided in conjunction with the Interim NXX Translation optional feature or 800 Data Base Service.

(C) FGC is provided as trunk side switching through the use of end office or access tandem switch trunk equipment. The switch trunk equipment is provided with answer and disconnect supervisory signaling. Wink start start-pulsing signals are provided in all offices where available. In those offices where wink start start-pulsing signals are not available, delay dial start-pulsing signals will be provided, unless immediate dial pulse signaling is provided, in which case no start-pulsing signals are provided.

TARIFF BRANCH
RECEIVED
7/17/2006
PUBLIC SERVICE
COMMISSION
OF KENTUCKY

INTRASTATE ACCESS SERVICES TARIFF

6. Switched Access Service (Cont'd)

6.7 Description and Provision of Feature Group C (FGC) (Cont'd)

6.7.1 Description (Cont'd)

(D) FGC is provided with multifrequency address signaling except in certain electromechanical end office switches where multifrequency signaling is not available. In such switches, the address signaling will be dial pulse or immediate dial pulse signaling, whichever is available. Up to 12 digits of the called party number dialed by the customer's end user using dual tone multifrequency or dial pulse address signals will be provided by Telephone Company equipment to the customer's premises where the Switched Access Service terminates. Such called party number signals will be subject to the ordinary transmission capabilities of the Local Transport provided.

(E) No access code is required for FGC switching. The telephone number dialed by the customer's end user shall be a seven or ten digit number for calls in the North American Numbering Plan (NANP). For international calls outside the NANP, a seven to twelve digit number may be dialed. The form of the numbers dialed by the customer's end user is NXX-XXXX, 0 or 1 + NXX-XXXX, NPA + NXX-XXXX, 0 or 1 + NPA + NXX-XXXX, and, when the end office is equipped for International Direct Distance Dialing (IDDD), 01 + CC + NN or 011 + CC + NN.

(F) FGC switching, when used in the terminating direction, may be used to access valid NXXs in the LATA, time or weather announcement services of the Telephone Company, community information services of an information provider, and other customers' services (by dialing the appropriate codes) when the services can be reached using valid NXX codes. When directly routed to an end office, only those valid NXX codes served by that office may be accessed. When routed through an access tandem, only those valid NXX codes served by offices subtending the access tandem may be accessed. Where measurement capabilities exist, the customer will also be billed additional non-access charges for calls to certain community information services, for which rates are applicable under Telephone Company exchange service tariffs, e.g., 976 (DIAL-IT) Network Services. Additionally, non-access charges will also be billed for calls from a FGC trunk to another customer's service in accordance with that customer's applicable service rates when the Telephone Company performs the billing function for that customer. Calls in the terminating direction will not be completed to 950-XXXX access codes, local operator assistance (0- and 0+), Directory Assistance (411 and 555-1212), service codes 611 and 911 and 101XXXX access codes. Calls will be completed to Directory Assistance (NPA-555-1212 or 555-1212) when FGC switching is combined with Directory Assistance switching. FGC may not be switched, in the terminating direction, to Switched Access Service Feature Groups B, C or D.

TARIFF BRANCH
RECEIVED
7/17/2006
PUBLIC SERVICE
COMMISSION
OF KENTUCKY

6. Switched Access Service (Cont'd)

6.7 Description and Provision of Feature Group C (FGC) (Cont'd)

6.7.1 Description (Cont'd)

(G) The Telephone Company will establish a trunk group or groups for the customer at end office switches or access tandem switches where FGC switching is provided. When required by technical limitations, a separate trunk group will be established for each type of FGC switching arrangement provided. Different types of FGC or other switching arrangements may be combined in a single trunk group at the option of the Telephone Company.

(H) Unless prohibited by technical limitations the providers of MTS and WATS may, at their option, combine Interim NXX Translation and/or 800 Data Base traffic in the same trunk group arrangement with their non-Interim NXX Translation traffic. When required by technical considerations, or when provided to a customer other than the provider of MTS and WATS, or at the request of the customer (i.e., provider of MTS and WATS),a separate trunk group will be established for Interim NXX Translation traffic and/or 800 Data Base.

(I) FGC switching is provided with multifrequency address signaling or out of band SS7 signaling where technically feasible. With multifrequency address signaling and SS7 signaling, up to 12 digits of the called party number dialed by the customer's end user dual tone multifrequency or dial pulse address signals will be provided by Telephone Company equipment to the customer's premises where the Switched Access Service terminates. Such address signals will be subject to the ordinary transmission capabilities of the Local Transport provided.

TARIFF BRANCH
RECEIVED
7/17/2006
PUBLIC SERVICE
COMMISSION
OF KENTUCKY

INTRASTATE ACCESS SERVICES TARIFF

6. Switched Access Service (Cont'd)

6.7 Description and Provision of Feature Group C (FGC) (Cont'd)

6.7.2 Optional Features

Following are descriptions of the various nonchargeable and chargeable optional features that are available in lieu of, or in addition to, the standard features provided with Feature Group C. Nonchargeable optional features are provided as Common Switching, Transport Termination and Local Transport options as set forth in (A) through (C) following. Chargeable optional features are set forth in (D) following.

(A) Common Switching Options

Descriptions of the common switching optional features are set forth in 6.10 following.

(1) Automatic Number Identification (ANI)

(2) Signaling Options

(a) Delay Dial Start-Pulsing Signaling
(b) Immediate Dial Pulse Address Signaling
(c) Dial Pulse Address Signaling

(3) Service Class Routing

(4) Alternate Traffic Routing

(5) Trunk Access Limitation

(6) Band Advance Arrangement Associated with Special Access Service Utilized in the Provision of WATS Service.

(7) End Office End User Line Service Screening for Use with Special Access Service Utilized in the Provision of WATS Service

(8) Hunt Group Arrangement for Use with Special Access Service Utilized in the Provision of WATS Service

(9) Uniform Call Distribution Arrangement for Use with Special Access Service Utilized in the Provision of WATS Service

(10) Nonhunting Number Associated with a Hunt Group Arrangement or Uniform Call Distribution Arrangement for Use with Special Access Service Utilized in the Provision of WATS Services

(11) Digital Switched 56 Service

(B) Transport Termination Options

(1) Operator Trunk - Coin, Non-Coin or Combined Coin and Non-Coin.

The Operator Trunk option is set forth in 6.10.2(B) following.

TARIFF BRANCH
RECEIVED
7/17/2006
PUBLIC SERVICE
COMMISSION
OF KENTUCKY

INTRASTATE ACCESS SERVICES TARIFF

6. Switched Access Service (Cont'd)

6.7 Description and Provision of Feature Group C (FGC) (Cont'd)

6.7.2 Optional Feature (Cont'd)

(C) Local Transport Options

(1) Supervisory Signaling

The Supervisory Signaling optional feature, due to its technical nature, is set forth in 15.1.1 following.

(2) Signaling System 7 (SS7)

The SS7 optional feature allows the customer to send and receive signals for out of band call set up and is available with Feature Group C. This option requires the establishment of a signaling connection between the customer's designated premises/Signaling Point of Interface (SPOI) and a Telephone Company Signaling Transfer Point (STP).

SS7 is provided in both the originating and terminating direction on FGC and each signaling connection is provisioned for two way SS7 signaling information.

(3) Multifrequency Address Signaling

(4) Calling Party Number (CPN)

(5) Charge Number Parameter (CNP)

(6) 64 Clear Channel Capability

The 64 Clear Channel Capability optional feature, due to its technical nature, is set forth in 15.1.1 following.

(D) Chargeable Optional Features

(1) Interim NXX Translation

The Interim NXX Translation Optional Feature is set forth in 6.10.3(A) following.

(2) Common Channel Signaling/Signaling System 7 (CCS/SS7) Network Connection Service (CCSNC)

The CCSNC Optional Feature is provided as set forth in 6.10.5 following.

TARIFF BRANCH
RECEIVED
7/17/2006
PUBLIC SERVICE
COMMISSION
OF KENTUCKY

INTRASTATE ACCESS SERVICES TARIFF

6. Switched Access Service (Cont'd)

6.7 Description and Provision of Feature Group C (FGC) (Cont'd)

6.7.3 Design and Traffic Routing

For Feature Group C, the Telephone Company shall design and determine the routing of Switched Access Service. Additionally, for Tandem Switching Transport, the Telephone Company will design and determine the routing from the first point of switching to the end office. The Telephone Company shall also decide if capacity is to be provided by originating only, terminating only, or two-way trunk groups. Finally, the Telephone Company will decide whether trunk side access will be provided through the use of two-wire or four-wire trunk terminating equipment.

Selection of facilities and equipment and traffic routing of the service are based on standard engineering methods, available facilities and equipment, and actual traffic patterns.

6.7.4 Measuring Access Minutes

Customer traffic to end offices will be measured (i.e., recorded) by the Telephone Company at end office switches or access tandem switches. Originating and terminating calls will be measured or imputed by the Telephone Company to determine the basis for computing chargeable access minutes. In the event the customer message detail is not available because the Telephone Company lost or damaged tapes or incurred recording system outages, the Telephone Company will estimate the volume of lost customer access minutes of use based on previously known values.

For terminating calls over FGC when measurement capability exists, the measured minutes are the chargeable access minutes. For originating calls over FGC, chargeable originating access are derived from recorded minutes in the following manner:

Step 1: Obtain recorded originating minutes and messages from the appropriate recording data.

Step 2: Obtain the total attempts by dividing the originating measured messages by the completion ratio. Completion ratios (CR) are obtained separately for the major call categories such as DDD, operator, 800 series, 900, directory assistance and international from a sample study which analyzes the ultimate completion status of the total attempts which receive acknowledgement from the customer. That is, Measured Messages divided by Completion Ratio equals Total Attempts.

TARIFF BRANCH
RECEIVED
7/17/2006
PUBLIC SERVICE
COMMISSION
OF KENTUCKY

INTRASTATE ACCESS SERVICES TARIFF

6. Switched Access Service (Cont'd)

6.7 Description and Provision of Feature Group C (FGC) (Cont'd)

6.7.4 Measuring Access Minutes (Cont'd)

Step 3: Obtain the total non-conversation time additive (NCTA) by multiplying the total attempts (obtained in Step 2) by the NCTA per attempt ratio. The NCTA per attempt ratio is obtained from the sample study identified in Step 2 by measuring the non-conversation time associated with both completed and incompleted attempts. The total NCTA is the time on a completed attempt from customer acknowledgement of receipt of call to called party answer (set up and ringing) plus the time on an incompleted attempt from customer acknowledgment of call until the access tandem or end office receives a disconnect signal (ring - no answer, busy or network blockage). That is, Total Attempts times Non- Conversation Time per Attempt Ratio equals Total NCTA.

Step 4: Obtain total chargeable originating access minutes by adding the total NCTA (obtained in Step 3) to the recorded originating measured minutes (obtained in Step 1). That is, Measured Minutes plus NCTA equals Chargeable Originating Access Minutes.

Following is an example which illustrates how the chargeable originating access minutes are derived from the measured originating minutes using this formula.

Where: Measured Minutes (M. Min.) = 7,000
Measured Messages (M. Mes.) = 1,000
Completion Ratio (CR) = .75
NCTA per Attempt = .4

(1) Total Attempts = $\frac{1{,}000(\text{M. Mes.})}{.75\ (\text{CR})}$ = 1,333.3

(2) Total NCTA = .4 (NCTA per Attempt) x 1,333.33 = 533.33

(3) Total Chargeable Originating Access Minutes =
7,000(M. Min) + 533.33(NCTA) = 7,533.33

FGC access minutes or fractions thereof, the exact value of the fraction being a function of the switch technology where the measurement is made, are accumulated over the billing period for each end office, and are then rounded up to the nearest access minute for each end office.

TARIFF BRANCH
RECEIVED
7/17/2006
PUBLIC SERVICE
COMMISSION
OF KENTUCKY

INTRASTATE ACCESS SERVICES TARIFF

6. Switched Access Service (Cont'd)

6.7 Description and Provision of Feature Group C (FGC) (Cont'd)

6.7.4 Measuring Access Minutes (Cont'd)

Originating Usage

For originating calls over FGC, usage measurement begins when the originating FGC first point of switching receives answer supervision from the customer's point of termination, indicating the called party has answered.

For originating calls over FGC provided with Signaling System 7 (SS7) Signaling when the FGC end office is not routed through an access tandem for connection to the customer, usage measurement begins when the SS7 Initial Address Message is sent from the Service Switching Point (SSP) to the Signal Transfer Point (STP).

For originating calls over FGC provided with Signaling System 7 (SS7) Signaling when the FGC end office is routed through a tandem for connection to the customer, usage measurement begins when the FGC end office receives the SS7 Exit Message from the tandem.

The measurement of originating call usage over FGC provided with Multi-Frequency Signaling ends when the originating FGC first point of switching receives disconnect supervision from either the originating end user's end office, indicating the originating end user has disconnected, or the customer's point of termination, whichever is recognized first by the first point of switching.

The measurement of originating call usage over FGC provided with SS7 Signaling ends when the originating FGC end office receives an SS7 Release Message indicating either the originating or terminating end user has disconnected.

Terminating Usage

For terminating calls over FGC the chargeable access minutes are either measured or derived. For terminating calls over FGC where measurement capability does not exist, terminating FGC usage is derived from originating usage, excluding usage from calls to closed end services or Directory Assistance Services.

TARIFF BRANCH
RECEIVED
7/17/2006
PUBLIC SERVICE
COMMISSION
OF KENTUCKY

6. Switched Access Service (Cont'd)

6.7 Description and Provision of Feature Group C (FGC) (Cont'd)

6.7.4 Measuring Access Minutes (Cont'd)

Terminating Usage (Cont'd)

For terminating calls over FGC where measurement capability exists, the measurement of chargeable access minutes begins when the terminating FGC first point of switching receives answer supervision from the terminating end user's end office, indicating the terminating end user has answered. This measurement ends when the terminating FGC first point of switching receives an on-hook supervisory signal from the terminating end user's end office, indicating the terminating end user has disconnected, or the customer's point of termination, whichever is recognized first by the first point of switching.

For terminating calls over FGC with SS7 signaling, usage measurement begins when the terminating recording switch receives answer supervision from the terminating end user. The Telephone Company switch receives answer supervision and sends the indication to the customer in the form of an answer message. The measurement of terminating FGC call usage ends when the entry switch receives or sends a Release Message, whichever occurs first.

6.7.5 Design Blocking Probability

The Telephone Company will design the facilities used in the provision of Switched Access Service FGC to meet the blocking probability criteria as set forth in (A) and (D) following.

(A) For Feature Group C, the design blocking objective will be no greater than one percent (.01) between the point of termination at the customer's designated premises and the first point of switching when traffic is directly routed without an alternate route. Standard traffic engineering methods will be used by the Telephone Company to determine the number of transmission paths required to achieve this level of blocking.

(B) The Telephone Company will perform routine measurement functions to assure that an adequate number of transmission paths are in service. The Telephone Company will recommend that additional capacity (i.e., busy hour minutes of capacity or trunks) be ordered by the customer when additional paths are required to reduce the measured blocking to the designed blocking level. For the capacity ordered, the design blocking objective is assumed to have been met if the routine measurements show that the measured blocking does not exceed the threshold listed in the following tables.

TARIFF BRANCH
RECEIVED
7/17/2006
PUBLIC SERVICE
COMMISSION
OF KENTUCKY

6. Switched Access Service (Cont'd)

6.7 Description and Provision of Feature Group C (FGC) (Cont'd)

6.7.5 Design Blocking Probability (Cont'd)

(B) (Cont'd)

(1) For transmission paths carrying only first routed traffic direct between an end office and customer's designated premises without an alternate route, and for paths carrying only overflow traffic, the measured blocking thresholds are as follows:

Number of Transmission Paths Per Trunk Group	Measured Blocking Thresholds in the Time Consistent Busy Hour for the Number of Measurements Taken Between 8:00 a.m. and 11:00 p.m. Per Trunk Group			
	15-20 Measurements	11-14 Measurements	7-10 Measurements	3-6 Measurements
2	7%	8%	9%	14%
3	5%	6%	7%	9%
4	5%	6%	7%	8%
5-6	4%	5%	6%	7%
7 or more	3%	3.5%	4%	6%

(2) For transmission paths carrying first routed traffic between an end office and customer's premises via an access tandem, the measured blocking thresholds are as follows:

Number of Transmission Paths Per Trunk Group	Measured Blocking Thresholds in the Time Consistent Busy Hour for the Number of Measurements Taken Between 8:00 a.m. and 11:00 p.m. Per Trunk Group			
	15-20 Measurements	11-14 Measurements	7-10 Measurements	3-6 Measurements
2	4.5%	5.5%	6.0%	9.5%
3	3.5%	4.0%	4.5%	6.0%
4	3.5%	4.0%	4.5%	5.5%
5-6	2.5%	3.5%	4.0%	4.5%
7 or more	2.0%	2.5%	3.0%	4.0%

TARIFF BRANCH
RECEIVED
7/17/2006
PUBLIC SERVICE
COMMISSION
OF KENTUCKY

6. Switched Access Service (Cont'd)

6.7 Description and Provision of Feature Group C (FGC) (Cont'd)

6.7.6 Testing Capabilities

FGC is provided, in the terminating direction where equipment is available, with seven digit access to balance (100 type) test line, milliwatt (102 type) test line, nonsynchronous or synchronous test line, automatic transmission measuring (105 type) test line, data transmission (107 type) test line, loop around test line, short circuit test line and open circuit test line. In addition to the tests described in 6.2.4 preceding which are included with the installation of service (Acceptance Testing) and as ongoing routine testing, Additional Cooperative Acceptance Testing, Additional Automatic Testing, and Additional Manual Testing are available as set forth in 13.3.1 following.

TARIFF BRANCH
RECEIVED
7/17/2006
PUBLIC SERVICE
COMMISSION
OF KENTUCKY

INTRASTATE ACCESS SERVICES TARIFF

6. Switched Access Service (Cont'd)

6.8 Description and Provision of Feature Group D (FGD)

6.8.1 Description

(A) FGD Access, which is available to all customers, provides trunk side access to Telephone Company end office switches. Special Access Services utilized for connection with FGD at Telephone Company designated WATS Serving offices as set forth in Section 7. following may be ordered separately by a customer other than the customer which orders the FGD Switched Access Service for the provision of WATS or WATS-type services. Special Access Services are ordered as set forth in 5.2 preceding.

(B) FGD is provided at Telephone Company designated end office switches whether routed directly or via Telephone Company designated electronic access tandem switches. The Telephone Company will designate the first point(s) of switching for FGD services where the Telephone Company elects to provide equal access through a centralized equal access arrangement. Those Telephone Company offices providing equal access through centralized arrangements are identified in NATIONAL EXCHANGE CARRIER ASSOCIATION, INC. TARIFF F.C.C. NO. 4.

(C) FGD is provided as trunk side switching through the use of end office or access tandem switch trunk equipment. The switch trunk equipment is provided with wink start start-pulsing signals and answer and disconnect supervisory signaling.

(D) FGD switching is provided with multifrequency address signaling or out of band SS7 signaling. With multifrequency address signaling and SS7 signaling, up to 12 digits of the called party number dialed by the customer's end user using dual tone multifrequency or dial pulse address signals will be provided by Telephone Company equipment to the customer's premises where the Switched Access Service terminates. Such address signals will be subject to the ordinary transmission capabilities of the Local Transport provided.

TARIFF BRANCH
RECEIVED
7/17/2006
PUBLIC SERVICE
COMMISSION
OF KENTUCKY

6. Switched Access Service (Cont'd)

6.8 Description and Provision of Feature Group D (FGD) (Cont'd)

6.8.1 Description (Cont'd)

(E) FGD switching, when used in the terminating direction, may be used to access valid NXXs in the LATA, time or weather announcement services of the Telephone Company, community information services of an information service provider, and other customers' services (by dialing the appropriate codes) when such services can be reached using valid NXX codes. When directly routed to an end office, only those valid NXX codes served by that office may be accessed. When routed through an access tandem, only those valid NXX codes served by end offices subtending the access tandem may be accessed. The customer will also be billed additional non-access charges for calls to certain community information services, for which rates are applicable under Telephone Company exchange service tariffs, e.g., 976 (DIAL-IT) Network Service. Additionally, non-access charges will also be billed for calls from a FGD trunk to another customer's service in accordance with that customer's applicable service rates when the Telephone Company performs the billing function for that customer. Calls in the terminating direction will not be completed to 950-XXXX access codes, local operator assistance (0- and 0+), Directory Assistance (411 and 555- 1212), service codes 611 and 911 and 101XXXX access codes. Calls will be completed to Directory Assistance (NPA-555-1212 or 555-1212) when FGD switching is combined with Directory Assistance switching. FGD may not be switched, in the terminating direction, to Switched Access Service Feature Groups B, C or D.

(F) The Telephone Company will establish a trunk group or groups for the customer at end office switches or access tandem switches where FGD switching is provided. When required by technical limitations, a separate trunk group will be established for each type of FGD switching arrangement provided. Different types of FGD or other switching arrangements may be combined in a single trunk group at the option of the Telephone Company

(G) The access code for FGD switching is a uniform access code the form 101XXXX. A uniform access code(s) will be the assigned number of all FGD access provided to the customer by the Telephone Company. No access code is required for calls to a customer over FGD Switched Access Service if the end user's telephone exchange service is arranged for presubscription to that customer, as set forth in 13.4 following.

Where no access code is required, the number dialed by the customer's end user shall be a seven or ten digit number for calls in the North American Numbering Plan (NANP). For international calls outside the NANP, a seven to twelve digit number may be dialed. The form of the numbers dialed by the customer's end user is NXX-XXXX, 0 or 1 + NXX-XXXX, NPA + NXX-XXXX, 0 or 1 + NPA + NXX-XXXX, and, when the end office is equipped for International Direct Distance Dialing (IDDD), 01 + CC + NN or 011 + CC + NN.

When the 101XXXX access code is used, FGD switching also provides for dialing the digit 0 for access to the customer's operator, 911 for access to the Telephone Company's emergency reporting service, or the end-of-dialing digit (#) for cut-through access to the customer's premises.

TARIFF BRANCH
RECEIVED
7/17/2006
PUBLIC SERVICE
COMMISSION
OF KENTUCKY

6. Switched Access Service (Cont'd)

6.8 Description and Provision of Feature Group D (FGD) (Cont'd)

6.8.1 Description (Cont'd)

(G) (Cont'd)

Unless otherwise ordered by the F.C.C., when equal access is provided through a centralized equal access arrangement, the 101XXXX access code may not be available in certain equal access offices. Those offices which provide FGD Switched Access Service without the 101XXXX access code are identified in NATIONAL EXCHANGE CARRIER ASSOCIATION, INC., TARIFF F.C.C. NO. 4.

(H) FGD switching will be arranged to accept calls from telephone exchange service locations without the need for dialing 101XXXX uniform access code. Each telephone exchange service line may be marked with a code to identify which 101XXXX code its calls will be directed to for interLATA service.

(I) Unless prohibited by technical limitations, the customer's Interim NXX Translation and/or 800 Data Base traffic may, at the option of the customer, be combined in the same trunk group arrangement with the customer's non-Interim NXX Translation and/or 800 Data Base traffic. When required by technical limitations, or at the request of the customer, a separate trunk group will be established for Interim NXX Translation and/or 800 Data Base traffic.

(J) When a customer has had FGB access in an end office and subsequently replaces the FGB access with FGD access, at the mutual agreement of the customer and the Telephone Company, the Telephone Company will direct calls dialed by the customer's end users using the customer's previous FGB access code to the customer's FGD access service. The customer must be prepared to handle normally dialed FGD calls, as well as calls dialed with the FGB access code which requires the customer to receive additional address signaling from the end user. Such calls will be rated as FGD. The Telephone Company may, with 90 days' written notice to the customer, discontinue this arrangement.

(K) For FGD switched access service to a Wireless Switching Center (WSC) directly interconnected to a Telephone Company access tandem office, the customer will be billed only the Local Transport premium rate element for the FGD usage. The mileage used to determine the monthly rate for the local transport rate element is as set forth in 6.4.6(G) preceding.

(L) A customer who has FGB access may elect to have their FGB traffic routed over FGD trunks at the end office or access tandem. If the customer elects this option the FGB traffic will be rated at FGD rates.

TARIFF BRANCH
RECEIVED
7/17/2006
PUBLIC SERVICE
COMMISSION
OF KENTUCKY

6. Switched Access Service (Cont'd)

6.8 Description and Provision of Feature Group D (FGD) (Cont'd)

6.8.2 Optional Feature

Following are the various nonchargeable and chargeable optional features that are available in lieu of, or in addition to, the standard features provided with Feature Group D. Nonchargeable Optional Features are provided as Common Switching, Transport Termination and Local Transport options as set forth in (A) through (C) following. Chargeable optional features are set forth in (D) following.

(A) Common Switching Options

Descriptions of the common switching optional features are set forth in 6.10 following.

(1) Automatic Number Identification (ANI)

(2) Service Class Routing

(3) Alternate Traffic Routing

(4) Trunk Access Limitation

(5) Call Gapping Arrangement

(6) International Carrier Option

(7) Band Advance Arrangement for Use with Special Access Service Utilized in the Provision of WATS or WATS-Type Services

(8) End Office End User Line Service Screening for Use with Special Access Service Utilized in the Provision of WATS or WATS-Type Services

(9) Hunt Group Arrangement for Use with Special Access Service Utilized in the Provision of WATS or WATS-Type Services

(10) Uniform Call Distribution Arrangement for Use with Special Access Service Utilized in the Provision of WATS or WATS-Type Services

(11) Nonhunting Number Associated with Hunt Group Arrangement or Uniform Call Distribution Arrangement for Use with Special Access Service Utilized in the Provision of WATS or WATS-Type Services

(12) Digital Switched 56 Service

TARIFF BRANCH
RECEIVED
7/17/2006
PUBLIC SERVICE
COMMISSION
OF KENTUCKY

6. Switched Access Service (Cont'd)

6.8 Description and Provision of Feature Group D (FGD) (Cont'd)

6.8.2 Optional Features (Cont'd)

(B) Transport Termination Options

(1) Operator Trunk - Full Feature

The Operator Trunk optional feature is set forth in 6.10.2(C) following.

(C) Local Transport Options

(1) Supervisory Signaling

The Supervisory Signaling optional feature, due to its technical nature, is set forth in 15.1.1 following.

(2) Signaling System 7 (SS7)

The SS7 optional feature allows the customer to send and receive signals for out of band call set up and is available with Feature Group D. This option requires the establishment of a signaling connection between the customer's designated premises/Signaling Point of Interface (SPOI) and a Telephone Company's Signaling Transfer Point (STP).

SS7 is provided in both the originating and terminating direction on FGD and each signaling connection is provisioned for two-way SS7 signaling information.

(3) Multifrequency Address Signaling

(4) Calling Party Number (CPN) Parameter

(5) Charge Number Parameter (CNP)

(6) Carrier Selection Parameter (CSP)

(7) 64 Clear Channel Capability

The 64 Clear Channel Capability optional feature, due to its technical nature, is set forth in 15.1.1 following.

.

TARIFF BRANCH
RECEIVED
7/17/2006
PUBLIC SERVICE
COMMISSION
OF KENTUCKY

6. Switched Access Service (Cont'd)

6.8 Description and Provision of Feature Group D (FGD) (Cont'd)

6.8.2 Optional Features (Cont'd)

(D) Chargeable Optional Features

(1) Interim NXX Translation

The Interim NXX Translation Optional Feature is set forth in 6.10.3(A) following.

(2) Common Channel Signaling/Signaling System 7 (CCS/SS7) Network Connection Service (CCSNC)

The CCSNC Optional Feature is provided as set forth in 6.10.3 following.

6.8.3 Design and Traffic Routing

For Feature Group D, the Telephone Company shall design and determine the routing of Tandem Switched Transport Access, including the selection of the first point of switching and the selection of facilities from the interface to any switching point and to the end offices where busy hour minutes of capacity are ordered. The Telephone Company shall also decide if capacity is to be provided by originating only, terminating only, or two-way trunk groups. Finally, the Telephone Company will decide whether trunk side access will be provided through the use of two-wire or four-wire trunk terminating equipment.

For Feature Group D Direct Trunked Transport service, the Telephone Company will determine the routing of Switched Access Service from the point of interface to the first point of switching or, if the customer specifies one or more hub locations for multiplexing, from the point of interface to the hub location, from one hub location to another hub location, and/or from a hub location to the first point of switching.

TARIFF BRANCH
RECEIVED
7/17/2006
PUBLIC SERVICE
COMMISSION
OF KENTUCKY

INTRASTATE ACCESS SERVICES TARIFF

6. Switched Access Service (Cont'd)

6.8 Description and Provision of Feature Group D (FGD) (Cont'd)

6.8.3 Design and Traffic Routing (Cont'd)

Selection of facilities and equipment and traffic routing of the service is based on standard engineering methods, available facilities and equipment, and actual traffic patterns. If the customer desires routing or directionality different from that determined by the Telephone Company, the Telephone Company will work cooperatively with the customer in determining (1) whether the service is to be routed directly to an end office or through an access tandem switch and (2) the directionality of the service; except the Telephone Company will designate the first point(s) of switching and routing to be used where equal access is provided through a centralized equal access arrangement. Those Telephone Company offices providing equal access through centralized arrangements are identified in NATIONAL EXCHANGE CARRIER ASSOCIATION, INC. TARIFF F.C.C. NO. 4.

6.8.4 Measuring Access Minutes

Customer traffic to end offices will be recorded at end office switches or access tandem switches. Originating and terminating calls will be measured or derived to determine the basis for computing chargeable access minutes. In the event the customer message detail is not available because the Telephone Company lost or damaged tapes or incurred recording system outages, the Telephone Company will estimate the volume of lost customer access minutes of use based on previously known values.

FGD access minutes or fractions thereof, the exact value of the fraction being a function of the switched technology where the measurement is made, are accumulated over the billing period for each end office, and are then rounded up to the nearest access minute for each end office.

Originating Usage

For originating calls over FGD the measured minutes are the chargeable access minutes.

For originating calls over FGD provided with Multi-Frequency Signaling, usage measurement begins when the originating FGD first point of switching receives the first wink supervisory signal forwarded from the customer's point of termination.

For originating calls over FGD provided with Signaling System 7 (SS7) Signaling when the FGD end office is not routed through an access tandem for connection to the customer, usage measurement begins when the SS7 Initial Address Message is sent from the Service Switching Point (SSP) to the Signal Transfer Point (STP).

For originating calls over FGD provided with Signaling System 7 (SS7) Signaling when the FGD end office is routed through a tandem for connection to the customer, usage measurement begins when the FGD end office receives the SS7 Exit Message from the tandem.

TARIFF BRANCH
RECEIVED
7/17/2006
PUBLIC SERVICE
COMMISSION
OF KENTUCKY

INTRASTATE ACCESS SERVICES TARIFF

6. Switched Access Service (Cont'd)

6.8 Description and Provision of Feature Group D (FGD) (Cont'd)

6.8.4 Measuring Access Minutes (Cont'd)

Originating Usage (Cont'd)

The measurement of originating call usage over FGD provided with Multi-Frequency Signaling ends when the originating FGD first point of switching receives disconnect supervision from either the originating end user's end office, indicating the originating end user has disconnected, or the customer's point of termination, whichever is recognized first by the first point of switching.

The measurement of originating calls usage over FGD provided with SS7 Signaling ends when the originating FGD end office receives an SS7 Release Message indicating either the originating or terminating end user has disconnected.

Terminating Usage

For terminating calls over FGD the chargeable access minutes are either measured or derived.

For terminating calls over FGD provided with Multifrequency Signaling where measurement capability exists, the measurement of chargeable access minutes begins when the terminating FGD first point of switching receives answer supervision from the terminating end user's end office, indicating the terminating end user has answered. This measurement ends when the terminating FGD first point of switching receives disconnect supervision from either the terminating end user's end office, indicating the terminating end user has disconnected, or the customer's point of termination, whichever is recognized first by the first point of switching.

For terminating calls over FGD, where measurement capability does not exist, terminating FGD usage is derived from originating usage, excluding usage from calls to closed end services or Directory Assistance Services.

For terminating calls over FGD with SS7 signaling, usage measurement begins when the terminating recording switch receives answer supervision from the terminating end user. The Telephone Company switch receives answer supervision and sends the indication to the customer in the form of an answer message. The measurement of terminating FGD call usage ends when the entry switch receives or sends a release message, whichever occurs first.

TARIFF BRANCH
RECEIVED
7/17/2006
PUBLIC SERVICE
COMMISSION
OF KENTUCKY

INTRASTATE ACCESS SERVICES TARIFF

6. Switched Access Service (Cont'd)

6.8 Description and Provision of Feature Group D (FGD) (Cont'd)

6.8.5 Design Blocking Probability

The Telephone Company will design the facilities used in the provision of Switched Access Service FGD to meet the blocking probability criteria as set forth in (A) and (B) following.

(A) For Feature Group D, the design blocking objective will be no greater then one percent (.01) between the point of termination at the customer's designated premises and the end office switch, whether the traffic is directly routed without an alternate route or routed via an access tandem. Standard traffic engineering methods as set forth in reference document Telecommunications Transmission Engineering - Volume 3 - Networks and Services (Chapters 6-7) will be used by the Telephone Company to determine the number of transmission paths required to achieve this level of blocking.

(B) The Telephone Company will perform routine measurement functions to assure that an adequate number of transmission paths are in service. The Telephone Company will recommend that additional capacity (i.e., busy hour minutes of capacity or trunks) be ordered by the customer when additional paths are required to reduce the measured blocking to the designed blocking level. For the capacity ordered, the design blocking objective is assumed to have been met if the routine measurements show that the measured blocking does not exceed the threshold listed in the following tables.

TARIFF BRANCH
RECEIVED
7/17/2006
PUBLIC SERVICE
COMMISSION
OF KENTUCKY

INTRASTATE ACCESS SERVICES TARIFF

6. Switched Access Service (Cont'd)

6.8 Description and Provision of Feature Group D (FGD) (Cont'd)

6.8.5 Design Blocking Probability (Cont'd)

(B) (Cont'd)

(1) For transmission paths carrying only first routed traffic direct between an end office and customer's designated premises without an alternate route, and for paths carrying only overflow traffic, the measured blocking thresholds are as follows:

Number of Transmission Paths Per Trunk Group	Measured Blocking Thresholds in the Time Consistent Busy Hour for the Number of Measurements Taken Between 8:00 a.m. and 11:00 p.m. Per Trunk Group			
	15-20 Measurements	11-14 Measurements	7-10 Measurements	3-6 Measurements
2	7%	8%	9%	14%
3	5%	6%	7%	9%
4	5%	6%	7%	8%
5-6	4%	5%	6%	7%
7 or more	3%	3.5%	4%	6%

(2) For transmission paths carrying first routed traffic between an end office and customer's premises via an access tandem, the measured blocking thresholds are as follows:

Number of Transmission Paths Per Trunk Group	Measured Blocking Thresholds in the Time Consistent Busy Hour for the Number of Measurements Taken Between 8:00 a.m. and 11:00 p.m. Per Trunk Group			
	15-20 Measurements	11-14 Measurements	7-10 Measurements	3-6 Measurements
2	4.5%	5.5%	6.0%	9.5%
3	3.5%	4.0%	4.5%	6.0%
4	3.5%	4.0%	4.5%	5.5%
5-6	2.5%	3.5%	4.0%	4.5%
7 or more	2.0%	2.5%	3.0%	4.0%

TARIFF BRANCH
RECEIVED
7/17/2006
PUBLIC SERVICE
COMMISSION
OF KENTUCKY

6. Switched Access Service (Cont'd)

6.8 Description and Provision of Feature Group D (FGD) (Cont'd)

6.8.6 Network Blocking Charge

The customer will be notified by the Telephone Company to increase its capacity (busy hour minutes of capacity or quantities of trunks) when excessive trunk group blocking occurs on groups carrying Feature Group D traffic and the measured access minutes for that hour exceed the capacity purchased. Excessive trunk group blocking occurs when the blocking thresholds stated below are exceeded. They are predicated on time consistent, hourly measurements over a 30 day period excluding Saturdays, Sundays and national holidays. If the order for additional capacity has not been received by the Telephone Company within 15 days of the notification, the Telephone Company will bill the customer, at the rate set forth in 17.2.2 following, for each overflow in excess of the blocking threshold when (1) the average "30 day period" overflow exceeds the threshold level for any particular hour and (2) the "30 day period" measured average originating or two-way usage for the same clock hour exceeds the capacity purchased.

Blocking Thresholds

Trunks in Service	1%	1/2%
1-2	7%	4.5%
3-4	5%	3.5%
5-6	4%	2.5%
7 or greater	3%	2.0%

The 1% blocking threshold is for transmission paths carrying traffic direct (without an alternate route) between an end office and a customer's premises. The 1/2% blocking threshold is for transmission paths carrying first routed traffic between an end office and a customer's premises via an access tandem.

6.8.7 Testing Capabilities

FGD is provided, in the terminating direction where equipment is available, with seven digit access to balance (100 type) test line, milliwatt (102 type) test line, nonsynchronous or synchronous test line, automatic transmission measuring (105 type) test line, data transmission (107 type) test line, loop around test line, short circuit test line and open circuit test line. In addition to the tests described in 6.2.4 preceding, which are included with the installation of service (Acceptance Testing) and as ongoing routine testing, Additional Cooperative Acceptance Testing, Additional Automatic Testing, and Additional Manual Testing, are available as set forth in 13.3.1 following.

When SS7 Signaling is ordered, network compatibility and other testing will be performed cooperatively by the Telephone Company and the customer as specified in Technical References TR-TSV 000905.

TARIFF BRANCH
RECEIVED
7/17/2006
PUBLIC SERVICE
COMMISSION
OF KENTUCKY

INTRASTATE ACCESS SERVICES TARIFF

6. Switched Access Service (Cont'd)

6.9 Interim Access (Cont'd)

6.9.1 Abbreviated Dialing Arrangement (ADA)

FGB Switched Access Service with an ADA (FGB ADA) is available to all customers, other than providers of MTS/WATS, from Telephone Company designated end offices. FGB ADA enables end users to utilize a one or two digit access code to access customers who have ordered this service.

(A) FGB ADA Exceptions

FGB ADA is available to all customers other than providers of MTS/WATS and is provisioned like FGB Switched Access Service as set forth in 6.6.1 preceding with the following exceptions:

(1) FGB ADA is available as originating only service, or as both originating and terminating service (2-way). FGB ADA is not available as terminating only service.

(2) FGB ADA is only provided by direct routing to an end office switch.

(3) The forms of the access code for originating FGB ADA switching are N or NX.* Assignment of FGB ADA access codes will be on a first-come, first-served basis and is subject to the availability of access code numbers.

(4) Calls in the terminating direction will not be completed to FGB with an ADA access code (N and NX.)

6.10 Chargeable and Nonchargeable Optional Features

Following are descriptions of the various optional features that are available in lieu of, or in addition to, the standard features provided with the Feature Groups. They are provided as Common Switching, Transport Termination or Interim NXX Translation options. Local Transport options associated with Common Channel Signaling Network Connection Service (CCSNC) are described in 6.10.1 following. All other Local Transport options, due to their technical nature, are described in 15.1.1 following.

* The abbreviations N and NX when used in the context of FGB ADA denotes the following; N signifies a number between 2 and 9, and X signifies a number between 0 and 9.

TARIFF BRANCH
RECEIVED
7/17/2006
PUBLIC SERVICE
COMMISSION
OF KENTUCKY

INTRASTATE ACCESS SERVICES TARIFF

6. Switched Access Service (Cont'd)

6.10 Common Switching, Transport Termination and Interim NXX Translation Optional Features (Cont'd)

6.10.1 Common Switching Nonchargeable Optional Features

The following table shows the Feature Group with which the optional features are available.

Option	Available Feature Groups A	B	C	D
A) Call Denial on Line or Hunt Group	X			
B) Service Code Denial on Line or Hunt Group	X			
C) Hunt Group Arrangement	X			
D) Uniform Call Distribution Arrangement	X			
E) Nonhunting Number for Use with Hunt Group or Uniform Call Distribution Arrangement	X			
F) Automatic Number Identification (ANI)		X	X	X
G) Up to 7 Digit Outpulsing of Access Digits to Customer		X		
H) Delay Dial Start-Pulsing Signaling			X	
I) Immediate Dial Pulse Address Signaling			X	
J) Dial Pulse Address Signaling			X	
K) Service Class Routing			X	X
L) Alternate Traffic Routing		X	X	X
M) Trunk Access Limitation			X	X
N) Call Gapping Arrangement				X
O) International Carrier Option				X
P) Band Advance Arrangement for Use with Special Access Service Utilized in the Provision of WATS or WATS-Type Services	X	X	X	X
Q) End Office End User Line Service Screening for Use with Special Access Service Utilized in the Provision of WATS or WATS-Type Services			X	X
R) Hunt Group Arrangement for Use with Special Access Service Utilized in the Provision of WATS or WATS-Type Services	X	X	X	X
S) Uniform Call Distribution Arrangement for Use with Special Access Service Utilized in the Provision of WATS or WATS-Type Services	X	X	X	X
T) Nonhunting Number Associated with Hunt Group Arrangement or Uniform Call Distribution Arrangement for Use with Special Access Service Utilized in the Provision of WATS or WATS-Type Services	X	X	X	X
U) Digital Switched 56 Service			X	X
V) Multifrequency Address Signaling			X	X
W) Signaling System 7 (SS7) Signaling			X	X
X) Calling Party Number (CPN)			X	X
Y) Carrier Selection Parameter (CSP)				X
Z) Charge Number Parameter (CNP)			X	X

TARIFF BRANCH
RECEIVED
7/17/2006
PUBLIC SERVICE
COMMISSION
OF KENTUCKY

INTRASTATE ACCESS SERVICES TARIFF

6. Switched Access Service (Cont'd)

6.10 Chargeable and Nonchargeable Optional Features (Cont'd)

6.10.1 Common Switching Nonchargeable Optional Features (Cont'd)

(A) Call Denial on Line or Hunt Group

This option allows for the screening of terminating Feature Group A calls. There are two screening arrangements available with this option as follows: 1) limiting terminating calls for completion to only 411 or 555-1212 whichever is available, 611, 911, 800 series and a Telephone Company specified set of NXXs within the Telephone Company local exchange calling area of the dial tone office in which the arrangement is provided, or, 2) limiting terminating calls to completion to only the NXXs associated with all end offices in the LATA, i.e., the call cannot be further switched or routed out of the LATA nor will calls be completed to 411 or 555-1212 whichever is available, 611, 911, or 800 series. All other calls are routed to a reorder tone or recorded announcement. Arrangement 1 is provided in all Telephone Company electronic end offices and, where available, in electromechanical end offices. Arrangement 2 is provided where available. This feature is available with Feature Group A.

(B) Service Code Denial on Line or Hunt Group

This option allows for the screening of terminating calls within the LATA, and for disallowing completion of calls to 0-, 555 and N11 (e.g., 411, 611, and 911). This feature is provided where available in all Telephone Company end offices. It is available with Feature Group A.

(C) Hunt Group Arrangement

This option provides the ability to sequentially access one of two or more line side connections in the originating direction, when the access code of the line group is dialed. This feature is provided in all Telephone Company end offices. It is available with Feature Group A. All Feature Group A access services in the same hunt group must provide off-hook supervisory signaling from the same point in time in the call sequence i.e., all off-hook supervisory signals must either be provided by the customer's equipment before the called party answers or all must be forwarded by the customer's equipment when the called party answers.

(D) Uniform Call Distribution Arrangement

This option provides a type of multiline hunting arrangement which provides for an even distribution of calls among the available lines in a hunt group. Where available, this feature is provided in Telephone Company electronic end offices only. It is available with Feature Group A.

TARIFF BRANCH
RECEIVED
7/17/2006
PUBLIC SERVICE
COMMISSION
OF KENTUCKY

INTRASTATE ACCESS SERVICES TARIFF

6. Switched Access Service (Cont'd)

6.10 Chargeable and Nonchargeable Optional Features (Cont'd)

6.10.1 Common Switching Nonchargeable Optional Features (Cont'd)

(E) Nonhunting Number for Use with Hunt Group or Uniform Call Distribution Arrangement

This option provides an access to an individual line within a multiline hunt or uniform call distribution group. When the nonhunting number is dialed, access is provided when it is idle, or busy tone is provided when it is busy. Where available, this feature is provided in Telephone Company electronic end offices only. It is available with Feature Group A.

(F) Automatic Number Identification (ANI)

(1) This option provides the automatic transmission of a seven digit or ten digit number and information digits to the customer designated premises for calls originating in the LATA, to identify the calling station. The ANI feature is an end office software function which is associated on a call-by-call basis with:

(a) all individual transmission paths in a trunk group routed directly between an end office and a customer designated premises or, where technically feasible, with

(b) all individual transmission paths in a trunk group between an end office and an access tandem, and a trunk group between an access tandem and a customer designated premises.

(2) The seven digit ANI telephone number is generally available with Feature Groups B and C. With these Feature Groups, technical limitations may exist in Telephone Company switching facilities which require ANI to be provided only on a directly trunked basis. ANI will be transmitted on all calls except those originating from multiparty lines, pay telephones using Feature Group B, or when an ANI failure has occurred. Seven digit ANI is not available with SS7 Signaling.

(3) The ten digit ANI telephone number is only available with Feature Group D. The ten digit ANI telephone number consists of the Numbering Plan Area (NPA) plus the seven digit ANI telephone number. The ten digit ANI telephone number will be transmitted on all calls except those identified as multiparty line or ANI failure, in which case only the NPA will be transmitted (in addition to the information digit described below). Ten digit ANI is provided with multifrequency address signaling or SS7 signaling.

TARIFF BRANCH
RECEIVED
7/17/2006
PUBLIC SERVICE
COMMISSION
OF KENTUCKY

6. Switched Access Service (Cont'd)

6.10 Chargeable and Nonchargeable Optional Features (Cont'd)

6.10.1 Common Switching Nonchargeable Optional Features (Cont'd)

(F) Automatic Number Identification (ANI) (Cont'd)

(4) With Feature Group C, at the option of the customer, ANI may be ordered from end offices where Telephone Company recording for end user billing is not provided. Additionally, ANI is provided from end offices where message detail recording is not required by the Telephone Company; as with 800 series service. ANI is not provided from end offices where the Telephone Company forwards ANI to its recording equipment.

(5) Where complete ANI detail cannot be provided, e.g., on calls from 4 and 8 party services, information digits will be provided to the customer.

The information digits identify:

(a) telephone number is the station billing number - no special treatment required,

(b) multiparty line - telephone number is a 4- or 8-party line and cannot be identified - number must be obtained via an operator or in some other manner,

(c) ANI failure has occurred in the end office switch which prevents identification of calling telephone number - must be obtained by operator or in some other manner,

(d) hotel/motel originated call which requires room number identification,

(e) coinless station, hospital, inmate, etc. call which requires special screening or handling by the customer, and

(f) call is an Automatic Identified Outward Dialed (AIOD) call from customer premises equipment. The AIOD ANI telephone number is the listed telephone number of the customer and is not the telephone number of the calling party.

These ANI information digits are generally available with Feature Groups B, C, and D.

TARIFF BRANCH
RECEIVED
7/17/2006
PUBLIC SERVICE
COMMISSION
OF KENTUCKY

6. Switched Access Service (Cont'd)

6.10 Chargeable and Nonchargeable Optional Features (Cont'd)

6.10.1 Common Switching Nonchargeable Optional Features (Cont'd)

(F) Automatic Number Identification (ANI) (Cont'd)

(6) Additional ANI information digits are available with Feature Group D also. They include:

(a) InterLATA restricted - telephone number is identified line

(b) InterLATA restricted - hotel/motel line

(c) InterLATA restricted - coinless, hospital, inmate, etc., line

These information digits will be transmitted as agreed to by the customer and the Telephone Company.

(7) Restrictions on Use and Sale of ANI

(a) Interstate access customers of this tariff may use ANI in the following manner:

(i) For billing and collection information, for routing, screening, and completing the originating subscriber's call or transaction, or for services directly related to the originating telephone subscriber's call or transaction.

The customer may use ANI to offer a product or service that is directly related to the products or services previously acquired from the customer by the originating subscriber.

(b) Interstate access customers of this tariff may not use ANI in the following manner:

(i) Reusing or selling the telephone number or billing information without first notifying the originating telephone subscriber and obtaining the affirmative consent of such subscriber for such reuse or sale.

(ii) Disclosing (except as permitted in (a), preceding), any information derived from the ANI for any purpose other than 1) performing the services or transactions that are the subject of the originating subscriber's call, 2) ensuring network performance security and the effectiveness of call delivery, 3) compiling, using, and disclosing aggregate information, and 4) complying with applicable law or legal process.

TARIFF BRANCH
RECEIVED
7/17/2006
PUBLIC SERVICE
COMMISSION
OF KENTUCKY

6. Switched Access Service (Cont'd)

6.10 Chargeable and Nonchargeable Optional Features (Cont'd)

6.10.1 Common Switching Nonchargeable Optional Features (Cont'd)

(G) Up to 7 Digit Outpulsing of Access Digits to Customer

This option provides for the end office capability of providing up to 7 digits of the uniform access code (950-XXXX) to the customer designated premises. The customer can request that only some of the digits in the access code be forwarded. The access code digits would be provided to the customer designated premises using multifrequency signaling, and transmission of the digits would precede the forwarding of ANI if that feature were provided. It is available with Feature Group B.

(H) Delay Dial Start-Pulsing Signaling

Where available, this option provides a method of indicating to the near end trunk circuit readiness to accept address signaling information by the far end trunk circuit. Delay dial is often referred to as an off-hook, on-hook signaling sequence. The delay dial signal is the off-hook interval and the start-pulsing signal is the on-hook interval. With integrity check, the calling office will not outpulse until a delay dial (off-hook) signal followed by a start-pulsing (on-hook) signal has been identified at the calling office. This option is available with Feature Group C.

(I) Immediate Dial Pulse Address Signaling

Where available, this option provides for the forwarding of dial pulses from the Telephone Company end office to the customer without the need of a start-pulsing signal from the customer. It is available with Feature Group C.

(J) Dial Pulse Address Signaling

Where available, this trunk side option provides for the transmission of number information, e.g., called number, between the end office switching system and the customer designated premises (in either direction) by means of direct current pulses. It is available with Feature Group C.

(K) Service Class Routing

This option provides the capability of directing originating traffic from an end office to a trunk group to a customer designated premises, based on the line class of service (e.g., coin, multiparty or hotel/motel), service prefix indicator (e.g., 0-, 0+, 01+ or 011+) or service access code (e.g., 900). It is provided in suitably equipped end office or access tandem switches. It is available with Feature Groups C and D.

TARIFF BRANCH
RECEIVED
7/17/2006
PUBLIC SERVICE
COMMISSION
OF KENTUCKY

6. Switched Access Service (Cont'd)

6.10 Chargeable and Nonchargeable Optional Features (Cont'd)

6.10.1 Common Switching Nonchargeable Optional Features (Cont'd)

(L) Alternate Traffic Routing

When the customer orders both Direct Trunked Transport and Tandem Switched Transport at the same end office, this option provides the capability of directing originating traffic from an end office (or appropriately equipped access tandem) to a trunk group (the "high usage" group) to a customer designated premises until that group is fully loaded, and then delivering additional originating traffic (the "overflowing" traffic) from the same end office or access tandem to a different trunk group (the "final" group) to a second customer designated premises. The customer shall specify the last trunk CCS desired for the high usage group. It is provided in suitably equipped end office or access tandem switches. It is available with Feature Groups B, C and D.

(M) Trunk Access Limitation

This option provides for the routing of originating 900 service calls to a specified number of transmission paths in a trunk group, in order to limit (choke) the completion of such traffic to the customer. Calls to the designated service which could not be completed over the subset of transmission paths in the trunk group, i.e., the choked calls, would be routed to reorder tone. It is provided in all Telephone Company electronic end offices and where available in electromechanical end offices. It is available with Feature Groups C and D.

(N) Call Gapping Arrangement

This option, provided in suitably equipped end office switches, provides for the routing of originating calls to 900 service to be switched in the end office to all transmission paths in a trunk group at a prescribed rate of flow, e.g., one call every five seconds, in order to limit (choke) the completion of such traffic to the customer. Calls to the designated service which are denied access by this feature, i.e., the choked calls, would be routed to a no-circuit announcement. It is provided in selected Feature Group D equipped end offices and is available only with Feature Group D.

TARIFF BRANCH
RECEIVED
7/17/2006
PUBLIC SERVICE
COMMISSION
OF KENTUCKY

6. Switched Access Service (Cont'd)

6.10 Chargeable and Nonchargeable Optional Features (Cont'd)

6.10.1 Common Switching Nonchargeable Optional Features (Cont'd)

(O) International Carrier Option

This option allows for Feature Group D end offices or access tandem switches equipped for International Direct Distance Dialing to be arranged to forward the international calls of one or more international carriers to the customer (i.e., the Telephone Company is able to route originating international calls to a customer other than the one designated by the end user either through presubscription or 101XXXX dialing). This arrangement requires provision of written verification to the Telephone Company that the customer is authorized to forward such calls. The written verification must be in the form of a letter of agency authorizing the customer to order the option on behalf of the international carrier. This option is only provided at Telephone Company end offices or access tandems equipped for International Direct Distance Dialing, and is available with Feature Group D.

(P) Band Advance Arrangement for Use with Special Access Service Utilized in the Provision of WATS or WATS-Type Services

This option, which is provided in association with two or more Special Access Service groups, provides for the automatic overflow of terminating calls to a second Special Access Service group, when the first group has exceeded its call capacity. This option is available with Feature Groups A, B, C and D.

(Q) End Office End User Line Service Screening for Use with Special Access Service Utilized in the Provision of WATS or WATS-Type Services

This option provides the ability to verify that an end user has dialed a called party address (by screening the called NPA and/or NXX on the basis of geographical bands selected by the Telephone Company) which is in accordance with that end user's service agreement with the customer, e.g., WATS. This option is provided in all Telephone Company electronic end offices and, where available, in electromechanical end offices which are designated as WATS Serving Offices. It is available with Feature Groups C and D.

(R) Hunt Group Arrangement for Use with Special Access Service Utilized in the Provision of WATS or WATS-Type Services

This option provides the ability to sequentially access one of two or more Special Access Services utilized in the provision of WATS services (e.g., 800 Series Service Special Access services) in the terminating direction, when the hunting number of the Special Access Service group is forwarded from the customer to the Telephone Company. This feature is provided in all Telephone Company designated WATS Access Serving Offices. It is available with Feature Groups A, B, C and D.

TARIFF BRANCH
RECEIVED
7/17/2006
PUBLIC SERVICE
COMMISSION
OF KENTUCKY

6. Switched Access Service (Cont'd)

6.10 Chargeable and Nonchargeable Optional Features (Cont'd)

6.10.1 Common Switching Nonchargeable Optional Features (Cont'd)

(S) Uniform Call Distribution Arrangement for Use with Special Access Service Utilized in the Provision of WATS or WATS-Type Services

This option provides a type of multiline hunting arrangement which provides for an even distribution of terminating calls among the available Special Access Lines utilized in the provision of WATS or WATS-Type Services in the hunt group. Where available, this feature is only provided in Telephone Company designated WATS Serving Offices. It is available with Feature Groups A, B, C and D.

(T) Nonhunting Number Associated with Hunt Group Arrangement or Uniform Call Distribution Arrangement for Use with Special Access Service Utilized in the Provision of WATS or WATS-Type Services

This option provides an arrangement for an individual Special Access Service utilized in the provision of WATS or WATS-Type Services within a multiline hunt or uniform call distribution group that provides access to that Special Access Service within the hunt or uniform call distribution group when it is idle or provides busy tone when it is busy, when the nonhunting number is dialed, without hunting to the next idle number. Where available, this feature is only provided in Telephone Company designated WATS Serving Offices. It is available with Feature Groups A, B, C and D.

(U) Digital Switched 56 Service

This option provides for a connection between a customer's premise and a suitably equipped end user's premise which uses end office switching and facilities capable of transmitting digital data up to 56 kilobits per second. Digital Switched 56 Service is only available in appropriately provisioned Feature Group C and Feature Group D offices as set forth in National Exchange Carrier Association, Inc. Tariff F.C.C. No. 4.

TARIFF BRANCH
RECEIVED
7/17/2006
PUBLIC SERVICE
COMMISSION
OF KENTUCKY

INTRASTATE ACCESS SERVICES TARIFF

6. Switched Access Service (Cont'd)

6.10 Chargeable and Nonchargeable Optional Features (Cont'd)

6.10.1 Common Switching Nonchargeable Optional Features (Cont'd)

(V) Multifrequency Address Signaling

Multifrequency Address Signaling is available as an optional feature with FGC and FGD. This feature provides for the transmission of number information and control signals (e.g., number address signals, automatic number identification) between the end office switch and the customer's premises (in either direction). Multifrequency signaling arrangements make use of pairs of frequencies out of a group of six frequencies. Specific information transmitted is dependent upon feature group and call type (i.e., POTS, coin or operator). This feature is not available in combination with SS7 signaling.

(W) Signaling System 7 (SS7) Signaling

This feature provides common channel out of band transmission of address and supervisory SS7 protocol signaling information between the end office switch or the tandem office switching system and the customer's designated premises. The signaling information is transmitted over facilities provided with the Common Channel Signaling/Signaling System 7 Network Connection Service (CCSNC) as specified in 6.1.3(A)(8) preceding. This feature is available with FGC and FGD and will be provided in accordance with the SS7 Interconnect specifications described in Technical Reference TR-TSV-000905.

(X) Calling Party Number (CPN)

This feature provides for the automatic transmission of the ten digit telephone number, associated with a calling station, to the customer's premises for calls originating in the LATA. The ten digit telephone number consists of the NPA plus the seven digit telephone number, which may or may not be the same number as the calling station's charge number. The ten digit telephone number will be coded as presented, or restricted via a "privacy indicator" for delivery to the called end user. This feature is automatically provided with originating FGC and FGD with SS7 signaling. CPN is available where technically feasible.

TARIFF BRANCH
RECEIVED
7/17/2006
PUBLIC SERVICE
COMMISSION
OF KENTUCKY

INTRASTATE ACCESS SERVICES TARIFF

6. Switched Access Service (Cont'd)

6.10 Chargeable and Nonchargeable Optional Features (Cont'd)

6.10.1 Common Switching Nonchargeable Optional Features (Cont'd)

(X) Calling Party Number (CPN) (Cont'd)

(1) Restrictions on Use and Sale of CPN

(a) Intrastate access customers of this tariff may use CPN in the following manner:

(i) For billing and collection information, for routing, screening, and completing the originating subscriber's call or transaction, or for services directly related to the originating telephone subscriber's call or transaction.

The customer may use CPN to offer a product or service that is directly related to the products or services previously acquired from the customer by the originating subscriber.

(b) Intrastate access customers of this tariff may not use CPN in the following manner:

(i) Reusing or selling the telephone number or billing information without first notifying the originating telephone subscriber and obtaining the affirmative consent of such subscriber for such reuse or sale.

(ii) Disclosing (except as permitted in (a), preceding) any information derived from the CPN for any purpose other than 1) performing the services or transactions that are the subject of the originating subscriber's call 2) ensuring network performance security and the effectiveness of call delivery, 3) compiling, using, and disclosing aggregate information, and 4) complying with applicable law or legal process.

(Y) Carrier Selection Parameter (CSP)

This feature provides for the automatic transmission of a signaling indicator which signifies to the customer whether or not the call being processed originated from a presubscribed line. If the line was presubscribed, the indicator will signify if the end user did or did not dial 101XXXX. This feature is provided with originating FGD with SS7 signaling.

TARIFF BRANCH
RECEIVED
7/17/2006
PUBLIC SERVICE
COMMISSION
OF KENTUCKY

INTRASTATE ACCESS SERVICES TARIFF

6. Switched Access Service (Cont'd)

6.10 Chargeable and Nonchargeable Optional Features (Cont'd)

6.10.1 Common Switching Nonchargeable Optional Features (Cont'd)

(Z) Charge Number Parameter (CNP)

(1) The CNP is equivalent to the existing ten digit Automatic Number Identification (ANI) available with FGC where technically feasible and FGD with MF signaling. The CNP provides for the automatic transmission of the ten digit billing number of the calling station and the originating line information. This feature is provided with originating FGC and FGD with SS7 signaling.

(2) Restrictions on Use and Sale of CNP

(a) Intrastate access customers of this tariff may use CNP in the following manner:

(i) For billing and collection information, for routing, screening and completing the originating subscriber's call or transaction, or for services directly related to the originating telephone subscriber's call or transaction.

The customer may use CNP to offer a product or service that is directly related to the products or services previously acquired from the customer by the originating subscriber.

(b) Intrastate access customers of this tariff may not use CNP in the following manner:

(i) Reusing or selling the telephone number or billing information without first notifying the originating telephone subscriber and obtaining the affirmative consent of such subscriber for such reuse or sale.

(ii) Disclosing, except as permitted in (a), preceding, any information derived from the CNP for any purpose other than 1) performing the services or transactions that are the subject of the originating subscriber's call, 2) ensuring network performance security and the effectiveness of call delivery, 3) compiling, using, and disclosing aggregate information, and 4) complying with applicable law or legal process.

TARIFF BRANCH
RECEIVED
7/17/2006
PUBLIC SERVICE
COMMISSION
OF KENTUCKY

6. Switched Access Service (Cont'd)

6.10 Chargeable and Nonchargeable Optional Features (Cont'd)

6.10.2 Transport Termination Nonchargeable Optional Features

(A) Rotary Dial Station Signaling

This option provides for the transmission of called party address signaling from rotary dial stations to the customer designated premises for originating calls. This option is provided in the form of a specific type of Transport Termination. It is available with Feature Group B, only on a directly trunked basis.

(B) Operator Trunk - Coin, Non-Coin, or Combined Coin and Non-Coin

This option may be ordered to provide coin, non-coin, or combined coin and non-coin operation. It is available only with Feature Group C and is provided in electronic end offices and other Telephone Company end offices where equipment is available. It is provided as a trunk type of Transport Termination.

Coin, Non-Coin

This arrangement provides for initial coin return control, except in the case of non-coin, and routing of 0+, 0-, 1+, 01+ or 011+ prefixed originating coin and non-coin calls requiring operator assistance to the customer designated premises. Because operator assisted coin calling traffic is routed over a trunk group dedicated to operator assisted calls, this arrangement is only provided in association with the Service Class Routing option.

This arrangement is normally ordered by the customer in conjunction with the ANI optional feature, since the preponderance of trunk groups equipped with this arrangement will be terminated in the customer's automated operator services systems, rather than in the customer's manual cord boards.

Combined Coin and Non-Coin

When so equipped, the ANI optional feature provides for the forwarding of information digits which identify that the call has originated from a hotel or motel, and whether room number identification is required, or that special screening is required, e.g., for coinless pay telephones, dormitory or inmate stations, or other screening arrangements agreed to between the customer and the Telephone Company.

(C) Operator Trunk - Full Feature

This option provides the initial coin return control function to the customer's operator. It is available with Feature Group D and is provided as a trunk type for Transport Termination. This feature is not available with SS7 signaling.

TARIFF BRANCH
RECEIVED
7/17/2006
PUBLIC SERVICE
COMMISSION
OF KENTUCKY

6. Switched Access Service (Cont'd)

6.10 Chargeable and Nonchargeable Optional Features (Cont'd)

6.10.3 Chargeable Optional Features

(A) Interim NXX Translation

This service is an originating offering utilizing trunk side Switched Access Service and provides a customer identification function based on the dialed SAC and NXX code.

For example, when a 1+900+NXX-XXXX call is originated by an end user, the Telephone Company will perform the customer identification function based on the dialed digits to determine the customer location to which the call is to be routed. If the call originates from an end office switch not equipped to provide the customer identification function, the call will be routed to an office at which the function is available. Once customer identification has been established, the call will be routed to that customer. Calls originating from an end office switch at which the customer identification function is performed, but to which the customer has not ordered Interim NXX Translation, will be blocked. Calls to a 900 number from coin telephones, 0+, 0-, 101XXXX, Inmate Service, Hotel/Motel Service and calling card calls will be blocked.

Calls to a 900 number dialed via 1+ from coin telephones, 0-, 101XXXX, Inmate Service, and Hotel/Motel Service will be blocked. Calls to a 900 number dialed via 0+ will normally be blocked. Orders received from customers to unblock 0+ calls to a 900 number will be accommodated where suitably equipped facilities exist.

The manner in which Interim NXX Translation is provided is dependent on the status of the end office from which the service is provided (i.e., equipped with equal access capabilities or not equipped with equal access capabilities). When Interim NXX Translation is provided from an end office not equipped with equal access capabilities, it will be provided in conjunction with FGC Switched Access Service.

The charge for Interim NXX Translation is as set forth in 17.2.1(B) following

TARIFF BRANCH
RECEIVED
7/17/2006
PUBLIC SERVICE
COMMISSION
OF KENTUCKY

6. Switched Access Service (Cont'd)

6.10 Chargeable and Nonchargeable Optional Features (Cont'd)

6.10.3 Chargeable Optional Features (Cont'd)

(B) Common Channel Signaling/Signaling System 7 Network Connection Service (CCSNC)

Common Channel Signaling/Signaling System 7 (CCS/SS7) Network Connection Service (CCSNC), which is available with Feature Group C and D, where technically feasible as designated in NATIONAL EXCHANGE CARRIER ASSOCIATION, INC. TARIFF FCC NO. 4, WIRE CENTER INFORMATION, provides a signaling path between a customer's designated Signaling Point of Interface (SPOI) and a Signaling Transfer Point (STP). This service provides customers with the use of a two-way signaling path for accessing information necessary for the completion of their end user's calls.

CCS/SS7 Network Connection Service is comprised of two parts; a Signaling Network Access Link (SNAL, consisting of Signaling Mileage Facility, Signaling Mileage Termination and Signaling Entrance Facility) and a Signaling Transfer Point (STP) Port. The SNAL is provided as a dedicated 56 Kpbs out-of-band signaling connection between the customer's SPOI and the STP Port on the STP.

The CCS/SS7 Network Connection Service is provisioned by a mated pair of STPs as described in Technical Reference TR-TSV 000905 in order to ensure network availability and reliability. The Telephone Company shall not be held liable for service outages if the customer employs technology related to the interconnection of signaling networks that do not adhere to generally accepted industry technical standards.

When CCS/SS7 Network Connection service is provisioned for use with SS7 Signaling, interconnection between signaling networks must occur at an STP.

Rates and charges for the CCS/SS7 Network Connection STP Ports and Signaling Network Access Links are contained in 17.2.2 following.

TARIFF BRANCH
RECEIVED
7/17/2006
PUBLIC SERVICE
COMMISSION
OF KENTUCKY

INTRASTATE ACCESS SERVICES TARIFF

6. Switched Access Service (Cont'd)

6.10 Chargeable and Nonchargeable Optional Features (Cont'd)

6.10.3 Chargeable Optional Features (Cont'd)

(C) 800 Data Base Access Service

800 Data Base Access Service is provided with FGC or FGD switched access service. When a 1+800series+NXX-XXXX call is originated by an end user, the Telephone Company will utilize the Signaling System 7 (SS7) network to query an 800 data base to perform the identification function. The call will then be routed to the identified customer over FGC or FGD switched access. The 800 series includes the following service area codes: 800, 888, 877, 866, 855, 844, 833 and 822.

The manner in which 800 data base access service is provided is dependent on the availability of SS7 service at the end office from which the service is provided as outlined following:

- When 800 data base access service originates at an end office equipped with Service Switching Point (SSP) capability for querying centralized data bases or at a non-SSP equipped end office that can accommodate direct trunking of originating 800 series calls, all such service will be provisioned from that end office.

- When 800 data base access service originates at an end office not equipped with SSP customer identification capability, the 800 series call will be delivered to the access tandem on which the end office is homed for 800 series service and which is equipped with the SSP feature to query centralized data bases.

  When 800 data base access service originates at an end office equipped with SSP capability that is not capable of accommodating direct trunking of originating 888 calls, the 888 call will be delivered to the access tandem on which the end office is homed and which is equipped with the SSP feature to query centralized data bases.

  Query charges as set forth in 17.2.2 following are in addition to those charges applicable for the Feature Group C or Feature Group D switched access service.

TARIFF BRANCH
RECEIVED
7/17/2006
PUBLIC SERVICE
COMMISSION
OF KENTUCKY

INTRASTATE ACCESS SERVICES TARIFF

7. Special Access Service

7.1 General

Special Access Service provides a transmission path to connect customer designated premises*, directly, or through a Telephone Company hub or hubs where bridging or multiplexing functions are performed, or to connect a customer designated premises and a WATS Serving Office. Special Access Service includes all exchange access not utilizing Telephone Company end office switches.

The connections provided by Special Access Service can be either analog or digital. Analog connections are differentiated by spectrum and bandwidth. Digital connections are differentiated by bit rate.

7.1.1 Channel Types

There are eight types of channels used to provide Special Access Services. Each type has its own characteristics. All are subdivided by one or more of the following:

- Transmission specifications,
- Bandwidth,
- Speed (i.e., bit rate),
- Spectrum

Customers can order a basic channel and select from a list of available transmission parameters and channel interfaces that they desire in order to meet specific communications requirements.

For purposes of ordering channels, each has been identified as a type of Special Access Service. Each type of Special Access Service is specifically listed on the following page and identifies the specific bandwidth and speed being offered. The customer must select the appropriate service that provides the speed and bandwidth desired.

* Telephone Company Centrex CO and CO-like switches and packet switches included in Public Packet Switching Network (PPSN) Service are considered to be a customer designated premises for purposes of this tariff.

TARIFF BRANCH
RECEIVED
7/17/2006
PUBLIC SERVICE
COMMISSION
OF KENTUCKY

7. Special Access Services (Cont'd)

7.1 General (Cont'd)

7.1.1 Channel Types (Cont'd)

Following is a brief description of each type of channel:

Metallic - a channel for the transmission of low speed varying signals at rates up to 30 baud. This channel type will be grandfathered for customers of record as of January 16, 2000. It will not be available to new customers after January 16, 2000.

Telegraph Grade - a channel for the transmission of binary signals at rates of 0 to 75 baud or 0 to 150 baud. This channel type will be grandfathered for customers of record as of January 16, 2000. It will not be available to new customers after January 16, 2000.

Voice Grade - a channel for the transmission of analog signals within an approximate bandwidth of 300 to 3000 Hz.

Program Audio - a channel for the transmission of audio signals. The nominal frequency bandwidths are from 200 to 3500 Hz, from 100 to 5000 Hz, from 50 to 8000 Hz, or from 50 to 15000 Hz.

Video - a channel for the transmission of standard 525 line 60 field monochrome or National Television Systems Committee color video signal and one or two associated 5 or 15 kHz audio signals. The bandwidth is either 30 Hz to 4.5 MHz or 30 Hz to 6.6 MHz.

Digital Data - a channel for the digital transmission of synchronous serial data at rates of 2.4, 4.8, 9.6, 19.2, 56.0 or 64.0 Kbps.

High Capacity - a channel for the transmission of isochronous serial digital data at rates of 1.544, 3.152, 6.312, 44.736 or 274.176 Mbps.

TARIFF BRANCH
RECEIVED
7/17/2006
PUBLIC SERVICE
COMMISSION
OF KENTUCKY

7. Special Access Service (Cont'd)

7.1 General (Cont'd)

7.1.1 Channel Types (Cont'd)

Detailed descriptions of each of the channel types are provided in 7.4 through 7.10 following.

The customer also has the option of ordering Voice Grade and High Capacity facilities (i.e., 1.544 Mbps, 3.152 Mbps, 6.312 Mbps, 44.736 Mbps and 274.176 Mbps) to Telephone Company hubs for multiplexing to individual channels of a lower capacity or bandwidth. Descriptions of the types of multiplexing available at the hubs, as well as the number of individual channels which may be derived from each type of facility, are set forth in 7.6 and 7.10 following. Additionally, the customer may specify optional features for the individual channels derived from the facility to further tailor the channel to meet specific communications requirements. Descriptions of the optional features and functions available are set forth in 7.2.1 following.

For example, a customer may order a 3.152 Mbps High Capacity channel from a customer designated premises to a Telephone Company hub for multiplexing to two 1.544 Mbps channels. The 1.544 Mbps channels may be further multiplexed at the same or a different hub to Voice Grade channels or may be extended to other customer designated premises or hubs. Optional features may be added to either the 1.544 Mbps or the Voice Grade channels.

TARIFF BRANCH
RECEIVED
7/17/2006
PUBLIC SERVICE
COMMISSION
OF KENTUCKY

7. Special Access Service (Cont'd)

7.1 General (Cont'd)

7.1.2 Service Descriptions

For the purposes of ordering, there are seven categories of Special Access Service. These are:

	Service Designator Codes
Metallic	MT
Telegraph Grade	TG
Voice	VG
Program Audio	AP
Video	TV
Digital Data	DA
High Capacity	HC

Each service consists of a basic channel to which a technical specifications package (customized or predefined), channel interface(s) and, when desired, optional features and functions are added to construct the service desired by the customer. Technical specifications packages are described in Section 15. following, optional features and functions are described in this section. Channel interfaces are described in 15.2 following.

Customized technical specifications packages will be provided where technically feasible. If the Telephone Company determines that the requested parameter specifications are not compatible, the customer will be advised and given the opportunity to change the order.

When a customized channel is ordered the customer will be notified whether Additional Engineering Charges apply. In such cases, the customer will be advised and given the opportunity to change the order.

The channel descriptions provided in 7.4 through 7.10 following, specify the characteristics of the basic channel and indicate whether the channel is provided between customer designated premises, between a customer designated premises and a Telephone Company hub where bridging or multiplexing functions are performed, between hubs, or between a customer designated premises and a WATS Serving Office.

TARIFF BRANCH
RECEIVED
7/17/2006
PUBLIC SERVICE
COMMISSION
OF KENTUCKY

7. Special Access Service (Cont'd)

7.1 General (Cont'd)

7.1.2 Service Descriptions (Cont'd)

(A) Information pertaining to the technical specifications packages indicates the transmission parameters that are available with each package. This information is displayed in matrices set forth in 15.2 following.

(B) Channel interfaces at each Point of Termination on a two- point service may be symmetrical or asymmetrical. On a multipoint service they may also be symmetrical or asymmetrical, but communications can only be provided between compatible channel interfaces. Only certain channel inter- faces are compatible. These are set forth in 15.2. following, in a combination format.

(C) Only certain channel interface combinations are available with the predefined technical specifications packages. These are delineated in the Technical References set forth in (F) following. When a customized channel is requested, all channel interface combinations available with the specified type of service are available with the customized channel.

(D) The optional features and functions available with each type of Special Access Service are described in this section. The optional features and functions information also indicates with which technical specifications packages they are available. Such information is displayed in matrices set forth in 15.2 following with the optional feature or function listed down the left side and the technical specifications package listed across the top.

(E) The Telephone Company will maintain services installed prior to April 1, 1985, at their existing transmission specifications, provided such performance specifications do not exceed the standards listed in this provision. Those services exceeding the standards listed will be maintained at the performance levels specified in this tariff.

TARIFF BRANCH
RECEIVED
7/17/2006
PUBLIC SERVICE
COMMISSION
OF KENTUCKY

7. Special Access Service (Cont'd)

7.1 General (Cont'd)

7.1.2 Service Descriptions (Cont'd)

(F) All services installed after April 1, 1985 will conform to the transmission specification standards contained in this tariff or in the following Technical References for each category of service:

Metallic	TR-NPL-000336
Telegraph Grade	TR-NPL-000336
Voice Grade	TR-TSY-000335 PUB 41004, Table 4
Program Audio and associated Addendum	TR-NPL-000337
Video	TR-NPL-000338
Digital Data	TR-NWT-000341
For 2.4, 4.8, 9.6 & 56.0 Kpbs	BellCore Pub 62310 (MDP-326-726)
For 19.2 Kpbs	INC Bulletin CB-INC-100
For 64.0 Kpbs	AT&T PUB 62310
High Capacity	TR-INS-000342 TR-NPL-000054 PUB 62411

7.1.3 Service Configurations

There are two types of service configurations over which Special Access Services are provided: two-point service and multipoint service.

(A) Two-Point Service

A two-point service connects two customer designated premises, either on a directly connected basis or through a hub where multiplexing functions are performed, or a customer designated premises and a WATS Serving Office (WSO).

TARIFF BRANCH
RECEIVED
7/17/2006
PUBLIC SERVICE
COMMISSION
OF KENTUCKY

7. Special Access Service (Cont'd)

7.1 General (Cont'd)

7.1.3 Service Configurations (Cont'd)

(A) Two-Point Service (Cont'd)

Applicable rate elements are:
- Channel Terminations
- Channel Mileage (as applicable)
- Optional Features and Functions (when applicable)

A Special Access Surcharge, as set forth in 7.3 following may be applicable.

The following diagram depicts a two-point Voice Grade service connecting two Customer Designated Premises (CDP). The service is provided with C-Type conditioning.

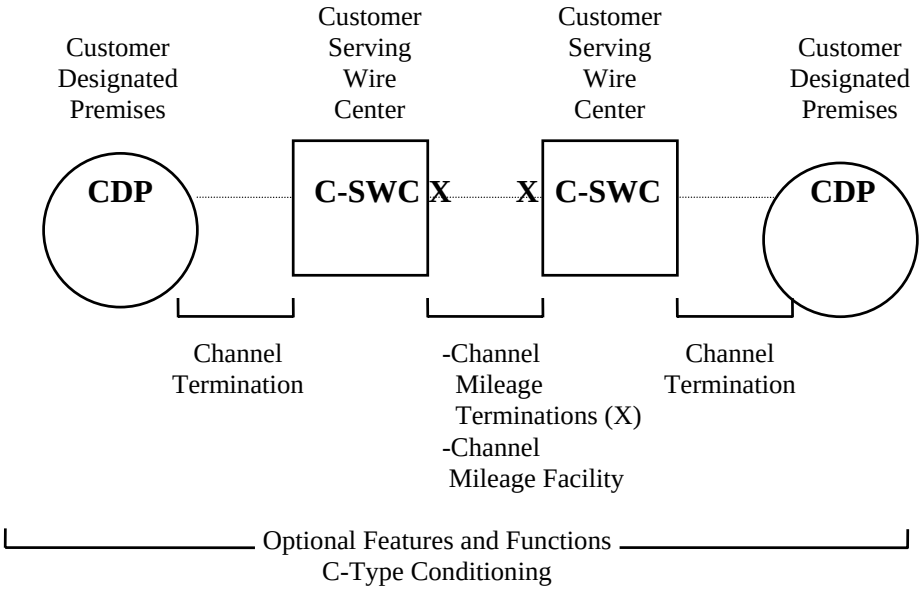

Applicable rate elements are:

- Channel Terminations (applicable one (1) per CDP)
- Channel Mileage
  . 2 Channel Mileage Terminations plus
  . 1 section, Channel Mileage Facility per mile
- C-Type Conditioning Optional Feature

TARIFF BRANCH
RECEIVED
7/17/2006
PUBLIC SERVICE COMMISSION OF KENTUCKY

7. Special Access Service (Cont'd)

7.1 General (Cont'd)

7.1.3 Service Configurations (Cont'd)

(A) Two-Point Service (Cont'd)

The following diagram depicts a two-point Voice Grade service connecting a customer designated premises to a WATS serving office.

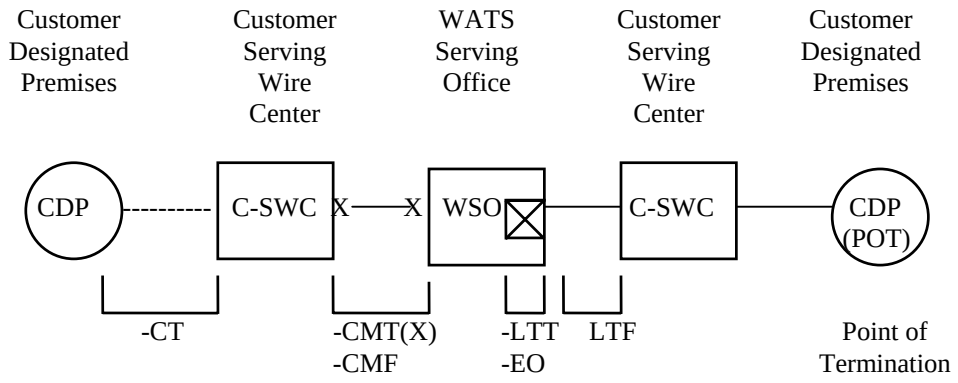

Special Access	**Switched Access**
CT - Channel Termination	LTT - Local Transport Termination
CMT - Channel Mileage Termination	EO - End Office elements
CMF - Channel Mileage Facility	LTF - Local Transport Facility

Applicable rate elements for Special Access are:

- Channel Termination
- Channel Mileage
  . 2 Channel Mileage Terminations plus
  . 1 section, Channel Mileage Facility per mile
- Special Access Surcharge*

* May not apply if exemption certificate is provided.

TARIFF BRANCH
RECEIVED
7/17/2006
PUBLIC SERVICE COMMISSION OF KENTUCKY

7. Special Access Service (Cont'd)

7.1 General (Cont'd)

7.1.3 Service Configurations (Cont'd)

(B) Multipoint Service

Multipoint service connects three or more customer designated premises through one or more Telephone Company hubs. Only certain types of Special Access Service are provided as multipoint service. These are so designated in the descriptions for the appropriate channel.

The channel between hubs (i.e., bridging locations) on a multipoint service is a mid-link. There is no limitation on the number of mid-links available with a multipoint service. However, when more than three mid-links in tandem are provided the quality of the overall service may be degraded.

Multipoint service utilizing a customized technical specifications package, as set forth in 7.1.2 preceding and 15.2 following, will be provided when technically possible. If the Telephone Company determines that the requested characteristics for a multipoint service are not compatible, the customer will be advised and given the opportunity to change the order.

When ordering, the customer will specify the desired bridging hub(s). NATIONAL EXCHANGE CARRIER ASSOCIATION TARIFF F.C.C. NO. 4 identifies serving wire centers, hub locations and the type of bridging functions available.

Applicable Rate Elements are:

- Channel Terminations (one per customer designated premises)
- Channel Mileage (as applicable between the serving wire center for each customer designated premises and the hub and between hubs).
- Bridging
- Additional Optional Features and Functions (when applicable).

TARIFF BRANCH
RECEIVED
7/17/2006
PUBLIC SERVICE
COMMISSION
OF KENTUCKY

7. Special Access Service (Cont'd)

7.1 General (Cont'd)

7.1.3 Service Configurations (Cont'd)

(B) Multipoint Service (Cont'd)

The Special Access Surcharge, as set forth in 7.3 following may be applicable.

Example: Voice Grade multipoint service connecting four customer designated premises (CDP) via two customer specified bridging hubs.

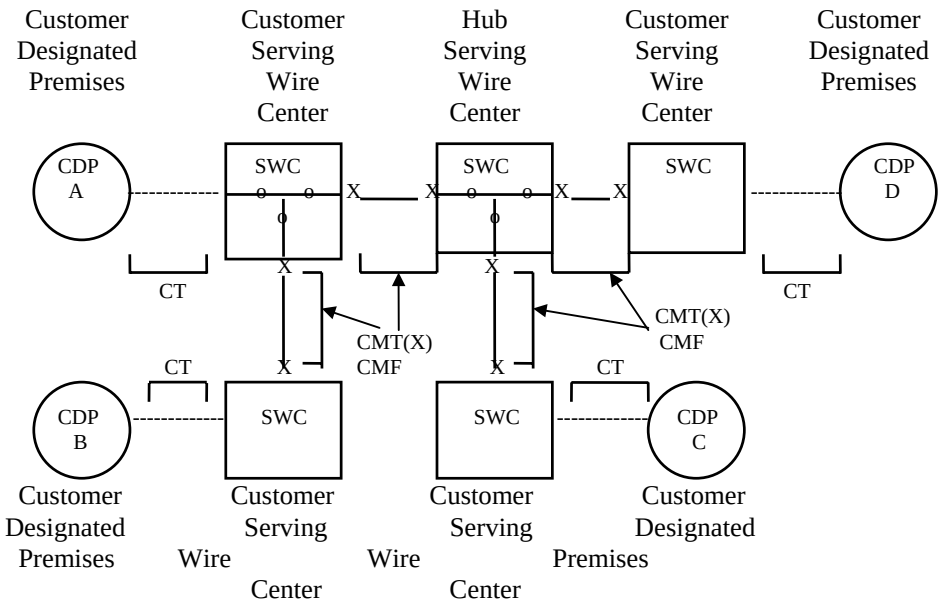

CT - Channel Termination
CMT - Channel Mileage Termination
CMF - Channel Mileage Facility
o - Bridging Port

Applicable rate elements are:

- Channel Terminations (4 applicable)
- Channel Mileage
  - o 2 Channel Mileage Terminations per Channel Mileage Facility section for a total of 8, plus
  - o 4 sections, Channel Mileage Facility per mile
- Bridging Optional Feature (6 applicable, i.e., each bridge port)

TARIFF BRANCH
RECEIVED
7/17/2006
PUBLIC SERVICE COMMISSION OF KENTUCKY

7. Special Access Service (Cont'd)

7.1 General (Cont'd)

7.1.4 Alternate Use

Alternate Use occurs when a service is arranged by the Telephone Company so that the customer can select different types of transmission at different times. A customer may use a service in any private beneficial manner. However, where technical or engineering changes are required to effectuate an alternate use, the Telephone Company will make such special arrangements available on an individual case basis.

The arrangement required to transfer the service from one operation to the other (i.e., the transfer relay and control leads) will be rated and provided on an individual case basis and filed in Section 12. following, Specialized Service or Arrangements. The customer will pay the stated tariff rates for the Access Service rate elements for the service ordered [i.e., Channel Terminations, Channel Mileage (as applicable) and Optional Features and Functions (if any)].

7.1.5 Special Facilities Routing

A customer may request that the facilities used to provide Special Access Service may be specially routed. The regulations, rates and charges for Special Facilities Routing (i.e., Avoidance, Diversity and Cable-Only) are set forth in Section 11. following.

7.1.6 Design Layout Report

At the request of the customer, the Telephone Company will provide to the customer the make-up of the facilities and services provided under this tariff as Special Access Service to aid the customer in designing its overall service. This information will be provided in the form of a Design Layout Report. The Design Layout Report will be provided to the customer at no charge, and will be reissued or updated whenever these facilities are materially changed.

TARIFF BRANCH
RECEIVED
7/17/2006
PUBLIC SERVICE
COMMISSION
OF KENTUCKY

7. Special Access Service (Cont'd)

7.1 General (Cont'd)

7.1.7 Acceptance Testing

At no additional charge, the Telephone Company will, at the customer's request, cooperatively test the following at the time of installation:

(A) For Voice Grade analog services, acceptance test will include tests for loss, 3-tone slope, DC continuity, operational signaling, C-notched noise, and C-message noise when these parameters are applicable and specified in the order of service. Additionally, for Voice Grade services, a balance (improved loss) test will be made if the customer has ordered the improved loss optional feature.

(B) For other analog services (i.e., Metallic, Telegraph, Program Audio, and Video) and for digital services (i.e., Digital Data and High Capacity), acceptance tests will include tests applicable to the service as specified by the customer in the order for service.

In addition to the above tests, Additional Cooperative Acceptance Testing for Voice Grade service to test other parameters, as described in 13.3.1(B) following, is available at the customer's request. All test results will be made available to the customer upon request.

7.1.8 Ordering Options and Conditions

Special Access Service is ordered under the Access Order provisions set forth in Section 5. preceding. Also included in that section are other charges which may be associated with ordering Special Access Service (e.g., Service Date Change Charges, Cancellation Charges, etc.).

TARIFF BRANCH
RECEIVED
7/17/2006
PUBLIC SERVICE
COMMISSION
OF KENTUCKY

7. Special Access Service (Cont'd)

7.2 Rate Regulations

This section contains the specific regulations governing the rates and charges that apply for Special Access.

7.2.1 Rate Categories

There are three basic rate categories which apply to Special Access Service:

- Channel Terminations (described in 7.2.1(A) following)
- Channel Mileage (described in 7.2.1(B) following)
- Optional Features and Functions (described in 7.2.1(C) following).

(A) Channel Terminations:

The Channel Termination rate category recovers the costs associated with the communications path between a customer designated premises and the serving wire center of that premises. Included as part of the Channel Termination is a standard channel interface arrangement which defines the technical characteristics associated with the type of facilities to which the access service is to be connected at the Point of termination (POT) and the type of signaling capability, if any. The signaling capability is provided as an optional feature as set forth in (C) following.

One Channel termination charge applies per customer designated premises at which the channel is terminated. This charge will apply even if the customer designated premises and the serving wire center are collocated in a Telephone Company building.

For DS3 High Capacity Service, the Channel Termination rates are made up of the DS3 Capacity Interface rate and the DS3 Channel Installed rate. The Capacity Interface rate is dependent upon the capacity ordered (i.e., Capacity Interface of 1, 3, 6 or 12) and is applicable at each customer designated premises (e.g., a capacity of 3 can terminate 1, 2, or 3 DS3 services). One DS3 Channel Installed rate applies per customer designated premises at which the channel is terminated for each DS3 channel that is ordered. These charges will apply even if the customer designated premises and the serving wire center are collocated in a Telephone Company building.

* The Channel Termination, Channel Mileage Termination and Channel Mileage Facility Special Access rate elements should not be applied to intrastate WATS and 800 dedicated services. the billing of these dedicated services (WATS and 800) should be in accordance with the rates of the Southwestern Bell WATS tariff. Also, the Special Access Surcharge should not be applied to the intrastate WATS and 800 service.

TARIFF BRANCH
RECEIVED
7/17/2006
PUBLIC SERVICE
COMMISSION
OF KENTUCKY

7. Special Access Service (Cont'd)

7.2 Rate Regulations (Cont'd)

7.2.1 Rate Categories (Cont'd)

(B) Channel Mileage

The Channel Mileage rate category recovers the costs associated with the end office equipment and the transmission facilities between the serving wire centers associated with two customer designated premises, between a serving wire center associated with a customer designated premises and a Telephone Company hub, between two Telephone Company hubs, between a serving wire center associated with a customer designated premises and a wire center equipped for Add/Drop Multiplexing (ADM), or between two ADM equipped wire centers. Channel Mileage rates are made up of the Channel Mileage Facility rate and the Channel Mileage Termination rate.

(1) Channel Mileage Facility

The Channel Mileage Facility rate recovers the per mile cost for the transmission path which extends between the Telephone Company serving wire centers and/or hub(s).

(2) Channel Mileage Termination

The Channel Mileage Termination rate recovers the cost for end office equipment associated with terminating the facility (i.e., basic circuit equipment and terminations at serving wire centers and hubs). The Channel Mileage Termination rate will apply at the serving wire center(s) for each customer designated premises and Telephone Company hub where the channel is terminated. If the Channel Mileage is between Telephone Company bridging hubs, the Channel Mileage Termination rate will apply per Telephone Company designated hub. If the Channel Mileage is between the serving wire center for a customer designated premises and a WATS Serving Office, the Channel Mileage Termination rate will apply at both the serving wire center associated with the customer designated premises and the WATS Serving Office.

TARIFF BRANCH
RECEIVED
7/17/2006
PUBLIC SERVICE
COMMISSION
OF KENTUCKY

7. Special Access Service (Cont'd)

7.2 Rate Regulations (Cont'd)

7.2.1 Rate Categories (Cont'd)

(B) Channel Mileage

(2) Channel Mileage Termination (Cont'd)

If the Channel Mileage is between the serving wire center for a customer designate premises and a WATS Serving Office, the Channel Mileage Termination rate will apply at both the serving wire center associated with the customer designated premises and the WATS Serving Office.

When the Channel Mileage Facility is zero (i.e., collocated serving wire centers), neither the Channel Mileage Facility rate nor the Channel Mileage Termination rate will apply.

TARIFF BRANCH
RECEIVED
7/17/2006
PUBLIC SERVICE
COMMISSION
OF KENTUCKY

7. Special Access Service (Cont'd)

7.2 Rate Regulations (Cont'd)

7.2.1. Rate Categories (Cont'd)

(C) Optional Features and Functions

The Optional Features and Functions rate category recovers the costs associated with optional features and functions which may be added to a Special Access Service to improve its quality or utility to meet specific communications requirements. These are not necessarily identifiable with specific equipment, but rather represent the end result in terms of performance characteristics which may be obtained. These characteristics may be obtained by using various combinations of equipment. Although the equipment necessary to perform a specified function may be installed at various locations along the path of the service, they will be charged for as a single rate element.

Examples of Optional Features and Functions that are available include, but are not limited to, the following:

- Signaling Capability
- Hubbing Functions
- Conditioning
- Transfer Arrangements

Descriptions for each of the available Optional Features and Functions are set forth in 7.4 through 7.10 following.

A hub is a Telephone Company designated serving wire center at which bridging or multiplexing functions are performed. The bridging functions performed are to connect three or more customer designated premises in a multipoint arrangement. The multiplexing functions are to channelize analog or digital facilities to individual services requiring a lower capacity or bandwidth.

NATIONAL EXCHANGE CARRIER ASSOCIATION, INC. TARIFF F.C.C. NO. 4 identifies serving wire centers, Hub locations, hub level, (i.e., Hub, Terminus Hub, Intermediate Hub, or Super-Intermediate Hub) and the type of bridging or multiplexing functions available. Additionally, subtending wire centers are identified for Intermediate and Super-Intermediate Hubs.

TARIFF BRANCH
RECEIVED
7/17/2006
PUBLIC SERVICE
COMMISSION
OF KENTUCKY

7. Special Access Service (Cont'd)

7.2 Rate Regulations (Cont'd)

7.2.2 Types of Rates and Charges

There are three types of rates and charges. These are monthly rates, daily rates and nonrecurring charges. The rates and charges are described as follows:

(A) Monthly Rates

Monthly rates are recurring rates that apply each month or fraction thereof that a Special Access Service is provided. For billing purposes, each month is considered to have 30 days.

(B) Daily Rates

Daily rates are recurring rates that apply to each 24 hour period or fraction thereof that a Program Audio or Video Special Access Service is provided for part-time use. For purposes of applying daily rates, the 24 hour period is not limited to a calendar day.

Part-time Video or Program Audio Service provided within a consecutive 30 day period will be charged the daily rate, not to exceed the monthly rate. For each day or partial day after a consecutive 30 day period of service, a charge equal to 1/30th of the monthly rate shall apply.

(C) Nonrecurring Charges

Nonrecurring charges are one-time charges that apply for specific work activity (i.e., installation or change to an existing service). The types of nonrecurring charges that apply for Special Access Service are: installation of service, installation of optional features and functions, and service rearrangements. These charges are in addition to the Access Order Charge as specified in 17.4.1 following.

(1) Installation of Service

Nonrecurring charges apply to each service installed. The nonrecurring charges for the installation of service are set for each channel type as a nonrecurring charge for the Channel Termination.

(2) Installation of Optional Features and Functions

When optional features and functions are installed coincident with the initial installation of service, no separate nonrecurring charge is applicable. When optional features and functions are installed or changed subsequent to the installation of service, an Access Order Charge as specified in 17.4.1 following will apply per order.

TARIFF BRANCH
RECEIVED
7/17/2006
PUBLIC SERVICE
COMMISSION
OF KENTUCKY

7. Special Access Service (Cont'd)

7.2 Rate Regulations (Cont'd)

7.2.2 Types of Rates and Charges (Cont'd)

(C) Nonrecurring Charges (Cont'd)

(3) Service Rearrangements

Service rearrangements are changes to existing (installed) services which may be administrative only in nature, as set forth following, or that involve actual physical change to the service. Changes to pending orders are set forth in 5.4 preceding.

Changes in the physical location of the point of termination or customer designated premises are moves as set forth in 7.2.3 following.

Changes in the type of Service or Channel Termination which result in a change of the minimum period requirement will be treated as a discontinuance of the service and an installation of a new service.

Changes in ownership or transfer of responsibility from one customer to another will be treated as a discontinuance of the service and an installation of a new service. In the event the change in ownership or transfer of responsibility is as set forth in 2.1.2(A) preceding where there is no change in facilities or arrangements, the change will be treated as an administrative change.

Administrative changes will be made without charge(s) to the customer. Administrative changes are as follows:

- Change of customer name,
- Change of customer or customer's end user premises address when the change of address is not a result of a physical relocation of equipment,
- Change in billing data (name, address, or contact name or telephone number),
- Change of agency authorization,
- Change of customer circuit identification,
- Change of billing account number,
- Change of customer test line number,
- Change of customer or customer's end user contact name or telephone number, and
- Change of jurisdiction.

TARIFF BRANCH
RECEIVED
7/17/2006
PUBLIC SERVICE
COMMISSION
OF KENTUCKY

7. Special Access Service (Cont'd)

7.2 Rate Regulations (Cont'd)

7.2.2 Types of Rates and Charges (Cont'd)

(C) Nonrecurring Charges (Cont'd)

(3) Service Rearrangements (Cont'd)

All other service rearrangements will be charged for as follows:

- If the change involves the addition of other customer designated premises to an existing service, the nonrecurring charge for the channel termination rate element will apply. The charge(s) will apply only for the location(s) that is being added. The charge(s) will be in addition to an Access Order Charge as set forth in 17.4.1 following.

- If the change involves the addition of an optional feature or function, (with the exception of the addition of Clear Channel Capability to an existing service), or if the change involves changing the type of signaling on a Voice Grade service, and for all other changes, the Access Order Charge as set forth in 17.4.1 following will apply.

  When the Clear Channel Capability optional feature is installed on an existing facility, the addition will be treated as a discontinuance and start of service and all associated non-recurring charges will apply.

7.2.3 Moves

A move involves a change in the physical location of one of the following:

- The Point of Termination at the customer's premises
- The customer's premises

The charges for the move are dependent on whether the move is to a new location with the same building or to a different building.

(A) Moves Within the Same Building

When the move is to a new location within the same building, the charge for the move will be an amount equal to one half of the nonrecurring (i.e., installation) charge for the service termination affected. There will be no change in the minimum period requirements. This charge is in addition to the Access Order Charge as specified in 17.4.1 following.

TARIFF BRANCH
RECEIVED
7/17/2006
PUBLIC SERVICE
COMMISSION
OF KENTUCKY

7. Special Access Service (Cont'd)

7.2 Rate Regulations (Cont'd)

7.2.3 Moves (Cont'd)

(B) Moves To a Different Building

Moves to a different building will be treated as a discontinuance and start of service and all associated nonrecurring charges will apply. New minimum period requirements will be established for the new services. The customer will also remain responsible for satisfying all outstanding minimum period charges for the discontinued service.

7.2.4 Minimum Periods

The minimum service period for all services except part-time Video and Program Audio services and DS3 High Capacity Service is one month and the full monthly rate will apply to the first month. Adjustments for the quantities of services established or discontinued in any billing period beyond the minimum period are as set forth in 2.4.1(F) preceding. The minimum service period for part-time Video and Program Audio service is a continuous 24-hour period, not limited to a calendar day. The minimum service period for DS3 High Capacity service is twelve months.

7.2.5 Mileage Measurement

The mileage to be used to determine the monthly rate for the Channel Mileage Facility is calculated on the airline distance between the locations involved, i.e.,

- the serving wire centers associated with two customer designated premises,
- a serving wire center associated with a customer designated premises and a Telephone Company hub,
- two Telephone Company hubs,
- a serving wire center associated with a customer designated premises and a wire center equipped for Add/Drop Multiplexing,
- two wire centers equipped for Add/Drop Multiplexing
- or between the serving wire center associated with a customer designated premises and a WATS Serving Office.

The serving wire center associated with a customer designated premises is the serving wire center from which this customer designated premises would normally obtain dial tone.

TARIFF BRANCH
RECEIVED
7/17/2006
PUBLIC SERVICE
COMMISSION
OF KENTUCKY

7. Special Access Service (Cont'd)

7.2 Rate Regulations (Cont'd)

7.2.5 Mileage Measurement (Cont'd)

Mileage charges are shown with each channel type. To determine the rate to be billed, first compute the mileage using the V&H coordinates method, as set forth in the NATIONAL EXCHANGE CARRIER ASSOCIATION, INC. TARIFF F.C.C. NO. 4, then multiply the resulting number of miles times the Channel Mileage Facility per mile rate, and add the Channel Mileage Termination rate for each termination. When the calculation results in a fraction of a mile, always round up to the next whole mile before determining the mileage and applying the rates. When more than one Telephone Company is involved in the provision of service, billing will be accomplished as set forth in 2.4.7 preceding.

When hubs are involved, mileage is computed and rates applied separately for each section of the Channel Mileage, i.e.,

- customer designated premises serving wire center to hub,
- hub to hub and/or
- hub to customer designated premises serving wire center.

However, when any service is routed through a hub for purposes other than customer specified bridging or multiplexing (e.g., the Telephone Company chooses to so route for test access purposes), rates will be applied only to the distance calculated between the serving wire centers associated with the customer designated premises.

See the service configuration example for multipoint service as set forth in 7.1.3(B) preceding.

TARIFF BRANCH
RECEIVED
7/17/2006
PUBLIC SERVICE
COMMISSION
OF KENTUCKY

7. Special Access Service (Cont'd)

7.2 Rate Regulations (Cont'd)

7.2.6 Facility Hubs

A customer has the option of ordering Voice Grade service or High Capacity services (i.e., DS1, DSlC, DS2, DS3 or DS4) to a facility hub for channelizing to individual services requiring lower capacity facilities (e.g., Telegraph, Voice, Program Audio, etc.).

Different locations may be designated as hubs for different facility capacities, e.g., multiplexing from digital to digital may occur at one location while multiplexing from digital to analog may occur at a different location. When placing an Access Order the customer will specify the desired hub. NATIONAL EXCHANGE CARRIER ASSOCIATION, INC. TARIFF F.C.C. NO. 4 identifies serving wire centers, hub locations, hub level, (i.e., Hub, Terminus Hub, Intermediate Hub, or Super-Intermediate Hub) and the type of multiplexing functions available. Additionally, subtending wire centers are identified for Intermediate and Super-Intermediate Hubs.

Some of the types of multiplexing available include the following:

- from higher to lower bit rate
- from higher to lower bandwidth
- from high capacity to voice frequency channels.

Point to point services may be provided on channels of these services to a hub. The transmission performance for the point to point service provided between customer designated premises will be that of the lower capacity or bit rate. For example, when a 1.544 Mbps channel is multiplexed to voice frequency channels, the transmission performance of the channelized services will be Voice Grade, not High Capacity.

The Telephone Company will commence billing the monthly rate for the service to the hub on the date specified by the customer on the Access Order. Individual channels utilizing these services may be installed coincident with the installation of the service to the hub or may be ordered and/or installed at a later date, at the option of the customer. The customer will be billed for a Voice Grade or a High Capacity Channel Termination, Channel Mileage (when applicable), and the multiplexer at the time the service is installed. Individual service rates (by service type) will apply for a Channel Termination and additional Channel Mileage (as required) for each channelized service. These will be billed to the customer as each individual service is installed.

Cascading multiplexing occurs when a High Capacity service is de-multiplexed to provide channels with a lesser capacity and one of the lesser capacity channels is further de-multiplexed. For example, a 6.312 Mbps High Capacity service is de-multiplexed to four DSl channels and then one of the DS1 channels is further de-multiplexed to 24 individual Voice Grade channels.

TARIFF BRANCH
RECEIVED
7/17/2006
PUBLIC SERVICE
COMMISSION
OF KENTUCKY

7. Special Access Service (Cont'd)

7.2 Rate Regulations (Cont'd)

7.2.6 Facility Hubs (Cont'd)

When cascading multiplexing is performed, whether in the same or a different hub, a charge for the additional multiplexing unit also applies. When cascading multiplexing is performed at different hubbing locations, Channel Mileage charges also apply between the hubs.

The Telephone Company will designate hubs for Program Audio and Video Services. Full-time or part-time service may be provided between customer designated premises or between a customer designated premises and a hub and billed accordingly at the monthly rates set forth in 17.3.5 and 17.3.6 following for a Channel Termination, Channel Mileage and Optional Features and Functions, as applicable. When the service is ordered to a hub, the customer may order full-time or part-time Video and Program Audio services as needed between that hub and additional customer designated premises. The rate elements required to provide the part-time service (i.e., Channel Termination, Channel Mileage and Optional Features and Functions, as applicable) will be billed at daily rates for the duration of the service requested.

7.2.7 Mixed Use Analog and Digital High Capacity Services

Mixed use refers to a rate application applicable only when the customer orders High Capacity Special Access facilities between a customer designated premises and a Telephone Company hub where the Telephone Company performs multiplexing/de-multiplexing functions and the same customer then orders the derived channels as Special and Switched Access Services. If the customer has Switched Access Service between a customer designated premises and an end office that is multiplexed at a Telephone Company hub and subsequently orders the derived channels as Special and Switched Access Service, rates and charges will apply as if the service were ordered as mixed use.

Except as noted above, the High Capacity facility will be ordered, provided and rated as Special Access Service (i.e., Channel Termination, Channel Mileage, as appropriate, and Multiplexing Arrangement). The nonrecurring charge that applies when the mixed use facility is installed will be the nonrecurring charge associated with the appropriate Special Access High Capacity Channel Termination. Rating as Special Access will continue until such time as the customer chooses to use a portion of the available capacity for Switched Access Service. Individual service (i.e., Switched or Special Access) nonrecurring charges will not apply to the individual channels of the mixed use facility.

When Special Access Service is provided utilizing a channel of the mixed use facility to a hub, High Capacity rates and charges will apply for the facility to the hub, as set forth preceding, and individual service rates and charges will apply from the hub to the customer designated premises. The rates and charges that will apply to the portion from the hub to the customer designated premises will be dependent on the specific type of Special Access Service that is provided (e.g., Voice Grade, Telegraph, etc.). The applicable rates and charges will include a Channel Termination and Channel Mileage, if applicable. Rates and charges for optional features and functions associated with the service, if any, will apply for the appropriate channel type.

TARIFF BRANCH
RECEIVED
7/17/2006
PUBLIC SERVICE
COMMISSION
OF KENTUCKY

7. Special Access Service (Cont'd)

7.2 Rate Regulations (Cont'd)

7.2.7 Mixed Use Analog and Digital High Capacity Services (Cont'd)

As each individual channel is activated for Switched Access Service, the High Capacity Special Access Channel Termination, Channel Mileage, and Multiplexing rates will be reduced accordingly (e.g., 1/24th for a DS1 service, 1/672nd for a DS3 service, etc.).

Switched Access Service rates and charges, as set forth in 17.2 following, will apply for each channel that is used to provide a Switched Access Service. The Switched Access Service Entrance Facility charge, if applicable, will be reduced by multiplying its rate by the ratio of derived Switched Access Service channels to the total number of channels that can be derived. If the Telephone Company is providing Direct Trunked Transport, then the Direct Trunked Transport and Multiplexing Charges will be reduced by multiplying their respective rates by the ratio of derived Direct Trunked Transport channels to the total number of channels that can be derived.

The customer must place an order for each individual Switched or Special Access Service utilizing the Mixed Use Facilities and specify the channel assignment for each such service.

7.2.8 High Capacity Optional Rate Plans

There are two High Capacity Optional Rate plans: a Term Discount plan and a Capacity Discount plan.

The Term Discount plan applies to Special Access DS1 and DS3 High Capacity Service Channel Termination, Channel Mileage Facility and Channel Mileage Termination monthly rates, as set forth following. The current monthly rates for such services are reduced by a fixed percentage. The amount of the discount percentage differs based on the length of the service commitment period selected by the customer. The Term Discount percentages for High Capacity Service are as set forth in 17.3.8 following.

Discounts for the Term Discount plan are only applied to High Capacity Service provided to a customer within the same state and LATA by the same Telephone Company.

Discounts for the Capacity Discount plan are only applied to Special Access DS3 High Capacity Service Channel Termination monthly rates as set forth in 17.3.8 following.

The minimum service period on a monthly rate basis is one month for DS1 service and twelve months for DS3 service.

TARIFF BRANCH
RECEIVED
7/17/2006
PUBLIC SERVICE
COMMISSION
OF KENTUCKY

7. Special Access Service (Cont'd)

7.2 Rate Regulations (Cont'd)

7.2.8 High Capacity Optional Rate Plans (Cont'd)

(A) Term Discounts

DS1 and DS3 High Capacity Special Access Service may be ordered at the customer's option on a monthly rate basis or for Term Discount periods of 36 months (3 years) or 60 months (5 years).

The minimum service period for all Term Discount plans is twelve months. The customer must specify the length of the service commitment period at the time the service is ordered.

For customers that subscribe to the Term Discount plan for 36 or 60 months, the Term Discount percentage as set forth in 17.3.8 following will be frozen from Company initiated decreases, for the entire discount period at the percent in effect at the beginning of the Term Discount period.

If a Term Discount Percentage increase occurs during the term of an existing Term Discount plan, the increased percentage will be applied automatically to the remainder of the current Term Discount period.

At the end of the Term Discount period, the customer may convert to month-to-month service or subscribe to a new Term Discount Plan. If the customer does not make a choice by the end of the discount period, the rates will automatically convert to month-to-month service rates.

To be included in a Term Discount plan, all eligible High Capacity rate elements must be ordered for the same commitment term (i.e., all 36 months or all 60 months) and with the same service date. When additional capacity is subsequently added, it will be available only on a month-to-month basis unless the discount period of the entire service is upgraded.

Eligible DS1 or DS3 High Capacity rate elements are those Channel Terminations, Channel Mileage Facility and Channel Mileage Terminations provided to a customer within the same state and LATA by the same Telephone Company. As long as the number of DS1s or DS3s included in a Term Discount plan remains constant, customer requests to install and disconnect DS1 or DS3 services, including changes affecting different wire centers and/or customer designated premises, will not change the current Term Discount period or the minimum service period, and Discontinuance of Service charges as set forth in (3) following will not apply.

TARIFF BRANCH
RECEIVED
7/17/2006
PUBLIC SERVICE
COMMISSION
OF KENTUCKY

7. Special Access Service (Cont'd)

7.2 Rate Regulations (Cont'd)

7.2.8 High Capacity Optional Rate Plans (Cont'd)

(A) Term Discounts (Cont'd)

(1) Upgrades in Term Discount

Services provided under monthly rates or Term Discount rates may be upgraded to a Term Discount plan at any time without incurring Channel Termination nonrecurring charges or discontinuance charges for existing services. The new Term Discount plan must meet or exceed the service term of the plan being upgraded. For example, a service with a 36 month commitment period may be upgraded to a new 36 month, or 60 month service period. The monthly rates will be those that are in effect at the time the service is upgraded. A new minimum service period applies to all High Capacity Service that is upgraded.

(2) Upgrades in Capacity (DS1 to DS3)

If the customer chooses to upgrade a service under the Term Discount rate plan to a higher capacity (i.e., DS1 to DS3), discontinuance charges will not apply, provided all the following conditions are met:

- the customer's order for the disconnect of the existing DS1 Service and the installation of the new DS3 Service are received at the same time and specifically reference the application of upgrade in capacity,

- the customer's disconnect order for the existing DS1 Service must reference the DS3 Service installation order,

- the new service has a total voice equivalent channel capacity greater than the total voice equivalent channel capacity of the service being discontinued and,

- the new Term Discount period meets or exceeds the Term Discount period being discontinued.

TARIFF BRANCH
RECEIVED
7/17/2006
PUBLIC SERVICE
COMMISSION
OF KENTUCKY

7. Special Access Service (Cont'd)

7.2 Rate Regulations (Cont'd)

7.2.8 High Capacity Optional Rate Plans (Cont'd)

(A) Term Discounts (Cont'd)

(2) Upgrades in Capacity (DS1 to DS3) (Cont'd)

A new minimum service period applies to all upgrades. Channel Termination nonrecurring charges for an equivalent channel capacity of the existing services being upgraded to the higher speed service will not be assessed. For example, 30 DS1 Services are being upgraded to DS3 Service. A capacity of 3 is installed at the customer's request. A total of 2 DS3 Channel rate elements will be installed without Channel Termination nonrecurring charges being assessed, as it will require 2 DS3 Channel rate elements to provide the equivalent channel capacity of the existing services. Channel Termination nonrecurring charges will not apply to the higher speed service if requested at the same time as the upgrade request. Channel Termination nonrecurring charges will apply for capacity that exceeds the existing equivalent channel capacity.

Should the customer choose to upgrade either a portion of, or the entire DS1 Service under the Term Discount plan to a DS3 Service and move the service to a new customer location(s) within the same state and LATA, and when service is provided by the same telephone company, discontinuance charges will not apply.

(3) Discontinuance of Service

If the customer chooses to disconnect all or a portion of the service prior to the expiration of the Term Discount period, discontinuance charges will apply to the portion of the service being discontinued.

Should the customer choose to discontinue a Term Discount plan prior to the completion of the minimum service period, discontinuance charges will apply. Discontinuance charges equal to one-hundred percent of the total undiscounted monthly rates, less any amounts previously paid, will apply for the minimum service period. Additionally, discontinuance charges of fifteen percent for DS1 service, and fifty percent for DS3 service, of the total undiscounted monthly charges will apply to the remaining portion of the discount service term.

Should the customer choose to discontinue service ordered under a Term Discount plan after the minimum service period but before the completion of the discount period, discontinuance charges will apply. Discontinuance charges of fifteen percent for DS1 Service, and fifty percent for DS3 Service, of the total discounted monthly charges will apply to the remaining portion of the discount period. For example, a customer has a DS1 Service which it chooses to discontinue after 33 months into a 60-month service term. The discontinuance charge would be 0.15 times 27 months times the undiscounted monthly rates for that service.

TARIFF BRANCH
RECEIVED
7/17/2006
PUBLIC SERVICE
COMMISSION
OF KENTUCKY

7. Special Access Service (Cont'd)

7.2 Rate Regulations (Cont'd)

7.2.8 High Capacity Optional Rate Plans (Cont'd)

(B) DS3 Capacity Discounts

The DS3 Capacity Discount Plan offers discounted rates for capacities of 3, 6, and 12 High Capacity Systems. The DS3 Capacity Discount is only available to those customers that had this plan in place prior to February 1, 1997. Existing customers subscribing to this option may continue their current service for the duration of their term discount period. Any DS3 Capacity Discount Plan not associated with a Term Discount Plan will expire no later than February 1, 2002.

This plan is not available to customers requesting this option after February 1, 1997.

Capacity Discounts apply only to DS3 Channel Terminations (i.e., DS3 Capacity Interfaces and DS3 Channels Installed). DS3 Capacity Discounts are available as part of, or separate from Term Discount plans. When a DS3 Capacity Discount Plan exists in conjunction with a Term Discount plan, the DS3 Channel Terminations must all be under the same month-to-month rate or Term Discount plan with the same service period and service date.

The Capacity Interface cannot be disconnected until all of the DS3 Channels installed are disconnected.

High Capacity Channel Mileage Facility and Channel Mileage Termination charges will apply as required Per DS3 Channel Installed. Capacity Discounts will not apply to these rate elements.

Capacity Discounts will only apply on DS3 Channel Terminations ordered between a serving wire center and customer location, over the same route. Channel Terminations associated with facilities provided between the same serving wire center and customer location via a second or alternate route will not be included as part of the same Capacity Discount plan as the primary route.

The minimum service period for all Capacity Discount plans is twelve months.

TARIFF BRANCH
RECEIVED
7/17/2006
PUBLIC SERVICE
COMMISSION
OF KENTUCKY

7. Special Access Service (Cont'd)

7.2 Rate Regulations (Cont'd)

7.2.8 High Capacity Optional Rate Plans (Cont'd)

(B) DS3 Capacity Discounts (Cont'd)

(1) Upgrades in DS3 Capacity Discounts

Services rated under the DS3 monthly rate plan may be upgraded to a Capacity Discount plan at any time, without incurring Channel Termination nonrecurring or discontinuance charges for the existing service.

Customers with a capacity of 1, 3 or 6 DS3 High Capacity Special Access Systems may upgrade to a new Capacity Discount without incurring Channel Termination nonrecurring or discontinuance charges for existing capacity. This upgrade will be allowed provided the customer designated premises remain the same. Additionally, the new Channel Termination capacity must exceed the Channel Termination capacity of the plan being upgraded. For example, a customer orders a Capacity of 3 DS3 Interface with 2 DS3 Channels Installed. Subsequently, the customer requests an upgrade to a Capacity of 12 DS3 Interface and adds an additional 3 DS3 Channels installed. The monthly rates will be those that are in effect at the time the service is upgraded. A new minimum service period applies to all services that are upgraded. Full Channel Termination nonrecurring charges as set forth in Section 17.3.8 will apply only to the 3 additional DS3 Channels added at the time of the discount plan upgrade.

Customers that subscribe to DS3 Capacity Discount plan may upgrade to a large Capacity Interface. Discontinuance charges will not apply if all the following conditions are met:

- the customer's order for the disconnect of the current DS3 Capacity Interface and order for the installation of the upgraded DS3 Capacity Interface are received by the telephone company at the same time and specifies that the capacity of service is to be upgraded,

- the customer's disconnect order for the existing DS3 Service must reference the new connection order,

- the new service is provided between the same customer locations as the discontinued service,

- the new service has a DS3 Capacity Interface larger than the Capacity Interface of the discount plan or plans being discontinued and,

- any applicable DS3 High Capacity Term Discount plan time period is reestablished or upgraded at the time of the upgrade in the Capacity Discount plan.

TARIFF BRANCH
RECEIVED
7/17/2006
PUBLIC SERVICE
COMMISSION
OF KENTUCKY

7. Special Access Service (Cont'd)

7.3 Surcharge for Special Access Service

7.3.1 General

Special Access Services provided under this tariff may be subject to the monthly Special Access Surcharge.

7.3.2 Application

(A) The Special Access Surcharge will apply to each intrastate Special Access Service that terminates on an end user's PBX or other device, where through a function of the device, the Special Access Service interconnects to the local exchange network. Interconnection functions include, but are not limited to, wiring and software functions, bridging, switching or patching of calls or stations. The Surcharge will apply irrespective of whether the interconnection function is performed in equipment located at the customer's premises or in a Centrex CO-type switch.

(B) Special Access Service will be exempted from the Surcharge by the Telephone Company upon receipt of the customer's written certification for the following Special Access Service terminations:

(1) an open-end termination in a Telephone Company switch of an FX line, including CCSA and CCSA-equivalent ONALs; or

(2) an analog channel termination that is used for radio or television program transmission; or

(3) a termination used for TELEX service; or

(4) a termination that by the nature of its operating characteristics could not make use of Telephone Company common lines such as, terminations which are restricted through hardware or software; or

(5) a termination that interconnects either directly or indirectly to the local exchange network where the usage is subject to Carrier Common Line charges such as, where the Special Access Service accesses only FGA and no local exchange lines, or Special Access Service between customer points of termination, or Special Access Service connecting CCSA or CCSA-type equipment (inter-machine trunks); or

(6) a termination that the customer certifies to the Telephone Company is not connected to a PBX or other device which interconnects the Special Access Service to a local exchange subscriber line.

TARIFF BRANCH
RECEIVED
7/17/2006
PUBLIC SERVICE
COMMISSION
OF KENTUCKY

INTRASTATE ACCESS SERVICES TARIFF

7. Special Access Service (Cont'd)

7.3 Surcharge for Special Access Service (Cont'd)

7.3.3 Exemption of Special Access Service

(A) Special Access Services which are terminated as set forth in 7.3.2(B) preceding will be exempted from the Special Access Surcharge if the customer provides the Telephone Company with written exemption certification. The certification may be provided to the Telephone Company as follows:

- at the time the Special Access Service is ordered or installed;
- at such time as the service is reterminated to a device which does not interconnect to the service to local exchange facilities; or
- at such time as the service becomes associated with a Switched Access Service that is subject to Carrier Common Line Charges.

(B) The exemption certification is to be provided by the customer ordering the service. The certification must be signed by the customer or authorized representative and include the category of exemption, as set forth in 7.3.2(B) preceding, for each termination, and the date which the exemption is effective.

(C) The customer shall also notify the Telephone Company when an exempted Special Access Service is changed or reterminated such that the exemption is no longer applicable.

(D) The Telephone Company will work cooperatively with the customer to resolve any questions regarding the exemption certification. In addition, the Telephone Company may withhold exemption of the service until the questions are resolved.

TARIFF BRANCH
RECEIVED
7/17/2006
PUBLIC SERVICE
COMMISSION
OF KENTUCKY

7. Special Access Service (Cont'd)

7.3 Surcharge for Special Access Service (Cont'd)

7.3.4 Rate Regulations

(A) The Surcharge will apply as set forth in 7.3.2(A) preceding, except that a surcharge will be assessed on a per voice grade equivalent basis for Special Access Services derived from High Capacity Special Access services as illustrated in the following example:

Special Access Service	Voice Grade Equivalent		Surcharge		Monthly Charge
DS1	24	x	$25	=	$600.00

The preceding example illustrates the maximum number of surcharges applicable to a DS1. If the customer claims exemption(s) as set forth in 7.3.3 preceding or, is not utilizing all available voice grade equivalents and has spare capacity, the number of surcharges would be reduced accordingly.

In the case of multipoint Special Access Services, one Special Access Surcharge will apply for each termination of a Special Access Channel at an end user's premises.

(B) The Telephone Company will bill the appropriate Special Access Surcharge to the ordering customer for each intrastate Special Access Service installed unless exemption certification is provided as set forth in 7.3.3 preceding.

(C) If a written certification is not received at the time the Special Access Service is obtained, the Surcharge will be applied. Exempt status will become effective on the certification date indicated by the customer, subject to the regulations set forth in (D) following.

(D) Crediting the Surcharge

The Telephone Company will cease billing the Special Access Surcharge when certification, as set forth in 7.3.3 pre- ceding, is received. If the status of the Special Access Service was changed prior to receipt of the exemption certification, the Telephone Company will credit the customer's account, not to exceed ninety (90) days, based on the effective date of the change as specified by the customer in the letter of certification.

(E) The Special Access Surcharge should not be applied to intrastate WATS and 800 services.

TARIFF BRANCH
RECEIVED
7/17/2006
PUBLIC SERVICE
COMMISSION
OF KENTUCKY

7. Special Access Service (Cont'd)

7.4 Metallic Service

7.4.1 Basic Channel Description

A Metallic channel is an unconditioned two-wire channel arranged to transmit direct current and capable of transmitting low speed varying signals at rates up to 30 baud. This channel is provided by metallic or equivalent facilities. Metallic channels are provided between customer designated premises or between a customer designated premises and a Telephone Company hub or hubs where bridging functions are performed. Interoffice metallic facilities will be limited in length to a total of five miles per channel.

Metallic Special Access Services are typically used for applications such as alarm, pilot wire protective relaying, and dc tripping protective relaying. These examples of applications are not intended to limit a customer's use of the channel nor to imply that the channel is limited to a particular use.

Rates and charges for Special Access Metallic Service are as set forth in 17.3.2 following.

7.4.2 Technical Specifications Packages and Network Channel Interfaces

Technical Specifications Packages are set forth in 15.2.1(A) following. Compatible network channel interfaces are set forth in 15.2.2(C)(1) following.

7.4.3 Optional Features and Functions

Central Office Bridging Capability

(A) Three Premises Bridging-Provision of tip-to-tip and ring-to-ring connection in a central office of a metallic pair to a third customer designated premises.

(B) Series Bridging of up to 26 customer designated premises.

The table set forth in 15.2.1(A) following shows the technical specifications packages with which the optional features and functions are available.

TARIFF BRANCH
RECEIVED
7/17/2006
PUBLIC SERVICE
COMMISSION
OF KENTUCKY

7. Special Access Service (Cont'd)

7.5 Telegraph Grade Service

7.5.1 Basic Channel Description

Telegraph Grade channel is an unconditioned channel capable of transmitting binary signals at rates of 0-75 baud or 0-150 baud. This channel is furnished for half-duplex or duplex operation. Telegraph Grade channels are provided between customer designated premises or between a customer designated premises and a Telephone Company hub or hubs.

Telegraph Grade Special Access Services are typically used for applications such as teletypewriter, telegraph grade control/remote metering, telegraph grade channel, telegraph grade extension, and telegraph grade entrance facilities. These examples of applications are not intended to limit a customer's use of the channel nor to imply that the channel is limited to a particular use.

Rates and charges for Special Access Telegraph Grade Service are as set forth in 17.3.3 following.

7.5.2 Technical Specifications Packages and Network Channel Interfaces

Technical Specifications Packages are set forth in 15.2.1(B) following. Compatible network channel interfaces are set forth in 15.2.2(C)(2) following.

7.5.3 Optional Features and Functions

Telegraph Bridging (two-wire and four-wire)

The table set forth in 15.2.1(B) following shows the technical specifications packages with which the optional features and functions are available.

TARIFF BRANCH
RECEIVED
7/17/2006
PUBLIC SERVICE
COMMISSION
OF KENTUCKY

7. Special Access Service (Cont'd)

7.6 Voice Grade Service

7.6.1 Basic Channel Description

A Voice Grade channel is a channel which provides voice frequency transmission capability in the nominal frequency range of 300 to 3000 Hz and may be terminated as two-wire or four-wire. Voice Grade channels are provided between customer designated premises, between a customer designated premises and a Telephone Company hub or hubs, or between a customer designated premises and a WATS Serving Office (WSO).

Voice Grade Special Access Services are typically used for voice and voiceband data applications. Typical examples of voice grade circuits are Foreign Exchange lines (station end only), multipoint private line, voice trunk type, two-point voice grade data, (one-way or simultaneous two-way), multipoint voice grade data, and voice grade telephoto or facsimile. These examples of applications are not intended to limit a customer's use of the channel nor to imply that the channel is limited to a particular use.

Rates and charges for Special Access Voice Grade Service are as set forth in 17.3.4 following.

7.6.2 Technical Specifications Packages and Network Channel Interfaces

Technical Specifications Packages are set forth in 15.2.1(C) following. Compatible network channel interfaces are set forth in 15.2.2(C)(3) following.

7.6.3 Optional Features and Functions

(A) Central Office Bridging Capability

(1) Voice Bridging (two-wire and four-wire)

(2) Data Bridging (two-wire and four-wire)

(3) Telephoto Bridging (two-wire and four-wire)

(4) DATAPHONE Select-A-Station Bridging with sequential arrangement ports or addressable arrangement ports

(5) Telemetry and Alarm Bridging

Split Band, Active Bridging
Passive Bridging
Summation, Active Bridging

The rates for these options are set forth in 17.3.4(C)(1)(e) following.

TARIFF BRANCH
RECEIVED
7/17/2006
PUBLIC SERVICE
COMMISSION
OF KENTUCKY

7. Special Access Service (Cont'd)

7.6 Voice Grade Service (Cont'd)

7.6.3 Optional Features and Functions (Cont'd)

(B) Central Office Multiplexing

Voice to Telegraph Grade. An arrangement that converts a Voice Grade channel to Telegraph Grade channels using frequency division multiplexing.

The rate for this option is set forth in 17.3.4(C)(5) following.

(C) Conditioning

Conditioning provides more specific transmission characteristics for Voice Grade services. The rates for these options are set forth in 17.3.4(C) following.

For two-point services, the parameters apply to each service as measured end-to-end. For multipoint services, the parameters apply as measured on each mid-link or as measured on each end link. C-Type conditioning and Data Capability may be combined on the same service.

(1) C-Type Conditioning

C-Type Conditioning is provided for the additional control of attenuation distortion and envelope delay distortion on data services. The attenuation distortion and envelope delay distortion specifications for C-Type Conditioning are delineated in Technical Reference TR-TSY-000335.

(2) Improved Attenuation Distortion*

Improved Attenuation Distortion upgrades the frequency versus loss limits of the channel. The technical specifications for Improved Attenuation Distortion are delineated in Technical Reference TR-TSY-000335. This option is available only when ordered in combination with C-Type Conditioning.

(3) Improved Envelope Delay Distortion*

Improved Envelope Delay Distortion upgrades the frequency versus delay response limits of the channel. The technical specifications for Improved Envelope Delay Distortion are delineated in Technical Reference TR-TSY-000335. This option is available only when ordered in combination with C-Type Conditioning.

* Improved Attenuation Distortion and Improved Envelope Delay Distortion will continue to be provided to all customers who were provided with either or both of these optional features in conjunction with C-Type Conditioning prior to May 4, 1988.

TARIFF BRANCH
RECEIVED
7/17/2006
PUBLIC SERVICE
COMMISSION
OF KENTUCKY

7. Special Access Service (Cont'd)

7.6 Voice Grade Service (Cont'd)

7.6.3 Optional Features and Functions (Cont'd)

(C) Conditioning (Cont'd)

(4) Data Capability (D Conditioning)

Data Capability provides transmission characteristics suitable for data communications. Specifically, Data Capability provides for the control of Signal to C-Notched Noise Ratio and intermodulation distortion. It is available for two-point services or three-point multipoint services.

The Signal to C-Notched Noise Ratio and intermodulation distortion parameter for Data Capability are delineated in Technical Reference TR-TSY-000335. The rate for this option is set forth in 17.3.4(C)(2) following.

When a service equipped with Data Capability is used for voice communications, the quality of the voice transmission may not be satisfactory.

(5) Telephoto Capability

Telephoto Capability provides transmission characteristics suitable for telephotographic communications. Specifically, Telephoto Capability is provided for the control of attenuation distortion and envelope delay distortion on telephotographic services. The attenuation distortion and envelope delay distortion parameters for Telephoto Capability are delineated in Technical Reference TR-TSY-000335. The rate for this option is set forth in 17.3.4(C)(2) following.

(6) Sealing Current Conditioning

Sealing Current Conditioning is providing to help maintain continuity on dry metallic loops. It is usually associated with four-wire DA or NO type network channel interfaces.

(D) Customer Specified Premises Receive Level

This option allows the customer to specify the receive level at the Point of Termination. The level must be within a specific range on effective four-wire transmission. The ranges are delineated in Technical Reference TR-TSY-000335. The rate for this option is set forth in 17.3.4(C)(4) following.

TARIFF BRANCH
RECEIVED
7/17/2006
PUBLIC SERVICE
COMMISSION
OF KENTUCKY

7. Special Access Service (Cont'd)

7.6 Voice Grade Service (Cont'd)

7.6.3 Optional Features and Functions (Cont'd)

(E) Improved Return Loss

(1) On Effective Four-Wire Transmission at Four-Wire Point of Termination (applicable to each two-wire port): Provides for a fixed 600 ohm impedance, variable level range and simplex reversal. Telephone Company equipment is required at the customer's premises where this option is ordered. The Improved Return Loss parameters are delineated in Technical Reference TR-TSY-000335. The rate for this option is set forth in 17.3.4(C)(3) following.

(2) On Effective Two-Wire Transmission at Two-Wire Point of Termination: Provides for more stringent Echo Control specifications. In order for this option to be applicable, the transmission path must be four-wire at one POT and two-wire at the other POT. Placement of Telephone Company equipment may be required at the customer's premises with the two-wire POT. The Improved Return Loss parameters are delineated in Technical Reference TR-TSY-000335. The rate for this option is set forth in 17.3.4(C)(3) following.

(F) Signaling Capability

Signaling Capability provides for the ability to transmit signals from one customer premises to another customer premises on the same service. The rate for this option is set forth in 17.3.4(C)(6) following.

The following network channel interfaces for Voice Grade service do not require signaling capability: AH, DA, DB, DD, DE, DS, NO, PR, and TF.

The following network channel interfaces for Voice Grade service require signaling capability: AB, AC, CT, DX, DY, EA, EB, EC, EX, GO, GS, LA, LB, LC, LO, LR, LS, RV and SF. The signaling capability charge will not apply when used in the provision of WATS access service.

(G) Selective Signaling Arrangement

An arrangement that permits code selective ringing for up to ten codes on a multipoint service. The rate for this option is set forth in 17.3.4(C)(7) following.

TARIFF BRANCH
RECEIVED
7/17/2006
PUBLIC SERVICE
COMMISSION
OF KENTUCKY

7. Special Access Service (Cont'd)

7.6 Voice Grade Service (Cont'd)

7.6.3 Optional Features and Functions (Cont'd)

(H) Transfer Arrangement

An arrangement that affords the customer an additional measure of flexibility in the use of an access channel(s). The arrangement can be utilized to transfer a leg of a Special Access Service to another channel that terminates in either the same or a different customer premises. A key activated or dial-up control service is required to operate the transfer arrangement. A spare channel, if required, is not included as part of the option. The rate for this option is set forth in 17.3.4(C)(8) following.

(I) Public Packet Switching Network (PPSN) Interface Arrangement

An arrangement that provides the interface requirements that permit a Voice Grade service to interface with a Public Packet Switching Network packet switch located in a Telephone Company premises. The interface is compatible with X.25 and X.75 packet switching protocols as defined by the CCITT. This option is provided on an Individual Case Basis as set forth in 17.3.4(C)(9) following.

(J) Four-Wire/Two-Wire Conversions

When a customer requests that an effective four-wire channel be terminated with a two-wire channel interface at the customer designated premises, a four-wire to two-wire conversion is required. The customer will be charged the four-wire Channel Termination rate as set forth in 17.3.4(A) following when an effective four-wire is specified in the order for service. The rate for the conversion is included as part of the basic four-wire Channel Termination rate.

TARIFF BRANCH
RECEIVED
7/17/2006
PUBLIC SERVICE
COMMISSION
OF KENTUCKY

7. Special Access Service (Cont'd)

7.6 Voice Grade Service (Cont'd)

7.6.3 Optional Features and Functions (Cont'd)

(K) Improved Two-Wire Voice Transmission

(1) Loss Deviation

The maximum Loss Deviation of the 1004 Hz loss relative to the Expected Measured Loss (EML) is -4.0 dB to +4.0 dB.

(2) Attenuation Distortion

The maximum Attenuation Distortion in the 404 to 280 Hz frequency band relative to loss at 1004 HZ is -2.0 dB to +6.0 dB.

(3) C-Message Noise

The maximum C-Message Noise for the transmission path at the route miles listed is less than:

Route Miles	C-Message Noise
less than 50	35 dBrnco
51 to 100	37 dBrnco
101 to 200	40 dBrnco
201 to 400	43 dBrnco
401 to 1000	45 dBrnco

(4) Return Loss

The Return Loss, expressed as Echo Return Loss (ERL) and Singing Return Loss (SRL), is equal to or greater than:

ERL	13.0 dB
SRL	6.0 dB

The rate for the provision of Improved Two-Wire Voice Transmission is included as part of the basic Channel Termination rate.

TARIFF BRANCH
RECEIVED
7/17/2006
PUBLIC SERVICE
COMMISSION
OF KENTUCKY

7. Special Access Service (Cont'd)

7.7 Program Audio Service

7.7.1 Basic Channel Description

A Program Audio channel is a channel with bandwidth measured in Hz for the transmission of a complex signal voltage. The actual bandwidth is a function of the channel interface selected by the customer. Only one-way transmission is provided. Program Audio channels are provided between customer designated premises or between a customer designated premises and a Telephone Company hub or hubs.

Program Audio Special Access services are typically used in full-time and part-time applications for radio broadcasting, noncommercial educational audio, and wired music. These examples of applications are not intended to limit a customer's use of the channel nor to imply that the channel is limited to a particular use.

Rates and charges for Special Access Program Audio Service are as set forth in 17.3.5 following.

7.7.2 Technical Specifications Packages and Network Channel Interfaces

Technical Specifications Packages are set forth in 15.2.1(D) following. Compatible network channel interfaces are set forth in 15.2.2(C)(4) following.

7.7.3 Optional Features and Functions

(A) Central Office Bridging Capability

Distribution Amplifier

(B) Gain Conditioning

Control of 1004 Hz AML at initiation of service to 0dB ± 0.5 dB.

(C) Stereo

Provision of a pair of gain/phase equalized channels for stereo applications. (An additional Program Audio channel must be ordered separately.)

The table set forth in 15.2.1(D) following shows the technical specifications packages with which the optional features and functions are available.

TARIFF BRANCH
RECEIVED
7/17/2006
PUBLIC SERVICE
COMMISSION
OF KENTUCKY

7. Special Access Service (Cont'd)

7.8 Video Service

7.8.1 Basic Channel Description

A Video channel is a channel with one-way transmission capability for a standard 525 line/60 field monochrome, or National Television Systems Committee color, video signal and one or two associated 5 or 15 kHz audio signal(s). The associated audio signal(s) may be either diplexed or provided as one or two separate channels. The provision and the bandwidth of the associated audio signal(s) is a function of the channel interface selected by the customer. Video channels are provided between customer designated premises or between a customer designated premises and a Telephone Company hub or hubs.

Rates and charges for Special Access Video Service are as set forth in 17.3.6 following.

7.8.2 Technical Specifications Packages and Network Channel Interfaces

Technical Specifications Packages are set forth in 15.2.1(E) following. Compatible network channel interfaces are set forth in 15.2.2(C)(5) following.

The following network channel interfaces (NCIs) define the bandwidth and the provision of the audio signal(s) associated with a Video channel:

NCI	Audio Bandwidth	Provision
2TV6-l	15kHz	1 Channel, diplexed
2TV6-2	15kHz	2 Channels, diplexed
2TV7-1	15kHz	1 Channel, diplexed
2TV7-2	15kHz	2 Channels, diplexed
4TV6-5	5kHz	1 Channel, separate
4TV6-15	15kHz	1 Channel, separate
4TV7-5	5kHz	1 Channel, separate
4TV7-15	15kHz	1 Channel, separate
6TV6-5	5kHz	2 Channels, separate
6TV6-15	15kHz	2 Channels, separate
6TV7-5	5kHz	2 Channels, separate
6TV7-15	15kHz	2 Channels, separate

TARIFF BRANCH
RECEIVED
7/17/2006
PUBLIC SERVICE
COMMISSION
OF KENTUCKY

7. Special Access Service (Cont'd)

7.9 Digital Data Service

7.9.1 Basic Channel Description

A Digital Data Channel is a channel for duplex four-wire transmission of synchronous serial data at the rate of 2.4, 4.8, 9.6, 19.2, 56 or 64.0* Kbps. The actual bit rate is a function of the channel interface selected by the customer. The channel provides a synchronous service with timing provided by the Telephone Company through the Telephone Company's facilities to the customer in the received bit stream. Digital Data channels are provided as either hubbed or non-hubbed services between customer designated premises and a Telephone Company hub or hubs. The hubs providing hubbed digital service and the wire centers providing non-hubbed digital service are identified in National Exchange Carrier Association, Inc., Wire Center Information, Tariff F.C.C. No. 4.

The customer may provide the Channel Service Unit-type equipment or other Network Channel Terminating Equipment associated with the Digital Data channel at the customer premises.

The Telephone Company will provide a channel capable of meeting a monthly average performance equal to or greater than 99.875% error-free seconds (if provided through a Digital Data hub) while the channel is in service, if it is measured through a CSU equivalent which is designed, manufactured, and maintained to conform with the specifications contained in Technical Reference PUB 62310.

Rate and charges for Special Access Digital Data Service are as set forth in 17.3.7 following.

7.9.2 Technical Specifications Packages and Network Channel Interfaces

Technical Specifications Packages are set forth in 15.2.1(F) following. Compatible channel interfaces are set forth in 15.2.2(C)(6) following.

The following network channel interfaces (NCIs) define the bit rates that are available for a Digital Data channel:

NCI	Bit Rate
DU-24	2.4 Kbps
DU-48	4.8 Kbps
DU-96	9.6 Kbps
DU-19	19.2 Kbps
DU-56	56.0 Kbps
DU-64	64.0 Kbps

* When 64.0 Kbps service is multiplexed on a DS1 High Capacity service, the DS1 must be equipped to provide Clear Channel Capability.

TARIFF BRANCH
RECEIVED
7/17/2006
PUBLIC SERVICE
COMMISSION
OF KENTUCKY

7. Special Access Service (Cont'd)

7.9 Digital Data Service (Cont'd)

7.9.3 Optional Features and Functions

The Optional Features and Functions described in (A), (B), and (C) following are only available where Digital Data Service is provided via a hub. The Optional Features and Functions described in (D) following are available where Digital Data Service is provided on a non-hubbed basis.

(A) Central Office Bridging Capability

Bridging is not available on a 64.0 Kbps Channel.

(B) Transfer Arrangement

An arrangement that affords the customer an additional measure of protection and/or flexibility in the use of their access channel(s) on a 1xN basis. The arrangement can be utilized to transfer a leg of a Special Access Service to either a spare or working channel that terminates in either the same or a different customer designated premises. This arrangement is only available at a Telephone Company designated hub. A key activated or dial-up control service is required to operate the transfer arrangement. A spare channel, if required, is not included as a part of the option.

(C) Public Packet Switching Network (PPSN) Interface Arrangement

An arrangement that provides the interface requirements that permit a Digital Data Service to interface with a Public Packet Switching Network packet switch located in a Telephone Company premises. The interface is compatible with X.25 and X.75 packet switching protocols as defined by the CCITT.

The table set forth in 15.2.1(F) following shows the technical specifications packages with which the optional features and functions are available.

TARIFF BRANCH
RECEIVED
7/17/2006
PUBLIC SERVICE
COMMISSION
OF KENTUCKY

7. Special Access Service (Cont'd)

7.10 High Capacity Service

7.10.1 Basic Channel Description

A High Capacity channel is a channel for the transmission of nominal 64.0 Kbps* or 1.544, 3.152, 6.312, 44.736, or 274.176 Mbps isochronous serial data. The actual bit rate is a function of the channel interface selected by the customer. High Capacity channels are provided between customer designated premises or between a customer designated premises and a Telephone Company hub or hubs.

The customer may provide the Network Channel Terminating Equipment associated with the High Capacity channel at the customer's premises.

A channel with technical specifications package HC1 will be capable of an error-free second performance of 98.75% over a continuos 24 hour period as measured at the 1.544 Mbps rate through a CSU equivalent which is designed, manufactured, and maintained to conform with the specifications contained in Technical Reference PUB 62411.

Rates and charges for Special Access High Capacity Service are as set forth in 17.3.8 following.

7.10.2 Technical Specifications Packages and Network Channel Interfaces

Technical Specifications Packages are set forth in 15.2.1(G) following. Compatible channel interfaces are set forth in 15.2.2(C)(7) following.

The following network channel interfaces (NCIs) define the bit rates that are available for a High Capacity channel:

NCI	Bit Rate
DS-15**	1.544 Mbps (DS1)
DS-27	274.176 Mbps (DS4)
DS-31	3.152 Mbps (DS1C)
DS-44	44.736 Mbps (DS3)
DS-63	6.312 Mbps (DS2)

* Available only as a channel of a 1.544 Mbps facility to a Telephone Company Digital Data hub or as a cross connect of two 2.4, 4.8, 9.6, 56.0 or 64.0 Kbps channels of two 1.544 Mbps facilities to a Digital Data hub(s). The customer must provide system and channel assignment data.

** A 64.0 Kbps channel is available as a channel(s) of a 1.544 Mbps channel to a Telephone Company hub.

TARIFF BRANCH
RECEIVED
7/17/2006
PUBLIC SERVICE
COMMISSION
OF KENTUCKY

7. Special Access Service (Cont'd)

7.10 High Capacity Service (Cont'd)

7.10.3 Optional Features and Functions

(A) Automatic Loop Transfer

The Automatic Loop Transfer provides protection on a lxN basis against failure of the facilities between a customer designated premises and the wire center serving that premises. Protection is furnished through the use of a switching arrangement that automatically switches to a spare channel line when a working line fails. The spare channel is not included as a part of the option. This option requires compatible equipment at both the serving wire center and the customer designated premises. The customer is responsible for providing the equipment at its designated premises. Equipment at the customer designated premises will be provided under tariff only if it existed in the Telephone Company inventory as of November 18, 1983.

(B) Transfer Arrangement

An arrangement that affords the customer an additional measure of flexibility in the use of their access channel(s). The arrangement can be utilized to transfer a leg of a Special Access Service to either a spare or working channel that terminates in either the same or a different customer designated premises. A key activated or dial-up control service is required to operate the transfer arrangement. A spare channel, if required, is not included as part of the option.

TARIFF BRANCH
RECEIVED
7/17/2006
PUBLIC SERVICE
COMMISSION
OF KENTUCKY

7. Special Access Service (Cont'd)

7.10 High Capacity Service (Cont'd)

7.10.3 Optional Features and Functions (Cont'd)

(C) Central Office Multiplexing

(1) DS4 to DS1

An arrangement that converts a 274.176 Mbps channel to 168 DS1 channels using digital time division multiplexing.

(2) DS3 to DS1

An arrangement that converts a 44.736 Mbps channel to 28 DS1 channels using
digital time division multiplexing.

(3) DS2 to DSl
An arrangement that converts a 6.312 Mbps channel to four DS1 channels using digital time division multiplexing.

(4) DS1C to DS1

An arrangement that converts a 3.152 Mbps channel to two DS1 channels using digital time division multiplexing.

(5) DS1 to Voice

An arrangement that converts a 1.544 Mbps channel to 24 channels for use with Voice Grade Services. A channel(s) of this DS1 to the Hub can also be used for a Digital Data Service.

(6) DS1 to DSO

An arrangement that converts a 1.544 Mbps channel to 23 64.0 Kbps channels utilizing digital time division multiplexing.

(7) DSO to Subrate

An arrangement that converts a 64.0 Kbps channel to subspeeds of up to twenty 2.4 Kbps, ten 4.8 Kbps, or five 9.6 Kbps channels using digital time division multiplexing.

The table set forth in 15.2.1(G) following shows the technical specifications packages with which the optional features and functions are available.

TARIFF BRANCH
RECEIVED
7/17/2006
PUBLIC SERVICE
COMMISSION
OF KENTUCKY

7. Special Access Service (Cont'd)

7.10 High Capacity Service (Cont'd)

7.10.3 Optional Features and Functions (Cont'd)

(D) Clear Channel Capability (CCC)

(1) CCC is an arrangement that allows a customer to transport 1.536 Mbps information rate signals over a 1.544 Mbps High Capacity channel or over a 1.544 Mbps High Capacity channel derived from a multiplexed 44.736 Mbps High Capacity channel with no constraint on the quantity or sequence of one and zero bits. This arrangement requires the customer signal at the channel interface to conform to Bipolar with Eight Zero Substitution (B8ZS) line code as described in Technical Reference TR-NPL-000054 and Technical Reference TR-INS-000342.

(2) CCC is provided, subject to availability of facilities, on DS1/1.544 Mbps High Capacity channels* between two customer designated premises and on multiplexed DS3/44.736 Mbps High Capacity channels or multiplexed DS1/1.544 Mbps High Capacity channels* between a Telephone Company hub office and a customer designated premises. The wire centers providing CCC are identified in NATIONAL EXCHANGE CARRIER ASSOCIATION, INC., WIRE CENTER INFORMATION, TARIFF F.C.C. NO. 4.

(3) The CCC optional feature may be ordered at the same time the High Capacity service is ordered or it may be ordered as an addition to an existing High Capacity Service. The customer must agree to out-of-service periods required to add this feature to an existing High Capacity Service. The charges for the CCC optional feature are as set forth in 7.2.2(C) (3) preceding.

7.11 Individual Case Filings

Certain services set forth in Special Access Service, Section 7. are provided on an Individual Case Basis. Rates and charges for Special Access Service provided on an Individual Case Basis are set forth in 17.3.9 following.

- Available only on a DS1-to-Digital multiplexed configuration.

TARIFF BRANCH
RECEIVED
7/17/2006
PUBLIC SERVICE
COMMISSION
OF KENTUCKY

8. Billing and Collection Service

The Telephone Company will, at the option of the customer, provide the following services:

(A) Recording Service,
(B) Message Billing Service
(C) Private Line Billing Service
(D) Billing Information Service
(E) Billing Inquiry Service

8.1 Recording Service

The Telephone Company will provide Recording Service in association with the offering of Feature Groups C and D Switched Access Service for customer messages that can be recorded by Telephone Company provided automatic message accounting equipment. In addition, where the Telephone Company records the customer messages on manual tickets, the Telephone Company will provide Recording Service for the manual tickets.

The Telephone Company will provide Recording Service on a state-wide basis. For Feature Group D Switched Access Service, the Telephone Company will provide recording service on a class of service basis.

8.1.1 General Description

Recording Service is the recording of the details of a customer message and, when requested by the customer, the provision of those details to the customer. Recording Service includes recording, and provision of recorded customer message detail.

Recording is the entering on magnetic tape or other acceptable media the details of customer messages originated through Switched Access Service for which answer and disconnect supervision has been received. Recording is provided 24 hours a day, 7 days a week.

These recorded messages will be aggregated in a format established by the Telephone Company and allowing for proper rating of the message.

Provision of customer message detail is the provision of magnetic tapes containing message detail and when requested by the customer, data-transmitting the assembled and edited customer message detail to the customer, sorting the message detail, and providing name and address information for the message detail.

8.1.2 Undertaking of the Telephone Company

(A) The Telephone Company will record all customer messages carried over Feature Groups C and D Switched Access Service that are available to Telephone Company provided recording equipment or operators. The recording equipment will be provided at locations selected by the Telephone Company.

TARIFF BRANCH
RECEIVED
7/17/2006
PUBLIC SERVICE
COMMISSION
OF KENTUCKY

8. Billing and Collection Service (Cont'd)

8.1 Recording Service (Cont'd)

8.1.2 Undertaking of the Telephone Company

(B) A standard format for the provision of the recorded customer message detail will be established by the Telephone Company and provided to the customer.

(C) The recorded customer message detail provided to the customer will, when requested by the customer, be sorted to furnish detail to meet the customer's need.

Also name and address information will, when requested by the customer and to the extent the required names and addresses are available in the Telephone Company customer information data bases, be provided for the recorded customer message detail.

(D) Recorded customer message detail with or without sorting and names and addresses will be provided to a customer as set forth in (E) following. The Telephone Company will determine the number of magnetic tapes or data files required to provide the recorded message detail to the customer.

(E) At the request of a customer, magnetic tapes containing the recorded customer message details with or without sorting and names and addresses will be provided to the customer as part of Recording Service. The magnetic tapes will be provided without the return of previously supplied tapes. The Telephone Company will supply the magnetic tapes. Unless specified otherwise by the customer, the magnetic tapes will be sent to the customer via first class U.S. Mail service. However, the customer may pick up the magnetic tapes at a location designated by the Telephone Company or request that the detail on the magnetic tapes or in a data file be data-transmitted to the customer.

(F) Recorded customer message detail which is used at the request of the customer to provide Message Processing and Message Bill Processing Service is not retained by the Telephone Company for longer than 45 days. The rated but unbilled message detail and the billed message detail is retained for reference (i.e. on paper or microfiche) in place of the recorded customer message detail. For recorded customer message detail not used by Message Processing Service at the customer's request, the Telephone Company will make every reasonable effort to recover recorded customer message detail previously made available to the customer and make it available again for the customer. The customer is responsible for the changes associated with the provision of detail previously available. Such a request must be made within 30 days from the date the details were initially made available to the customer.

TARIFF BRANCH
RECEIVED
7/17/2006
PUBLIC SERVICE
COMMISSION
OF KENTUCKY

8. Billing and Collection Service (Cont'd)

8.1 Recording Service (Cont'd)

8.1.3 Liability of the Telephone Company

The Telephone Company liability for Recording Service is as follows:

(A) If customer message detail is not available because the Telephone Company lost or damaged tapes or incurred recording system outages, the Telephone Company will estimate the volume of lost customer messages and associated revenue based on previously known values. This estimated customer message volume will be included along with the customer message detail provided to the customer and/or provided for Message Processing Service. In such events the extent of the Telephone Company's liability for damages shall be limited to the granting of a corresponding credit adjustment to the customer amounts due to account for the unbillable revenue.

(B) When the Telephone Company is notified that, due to error or omission incomplete data have been provided to a customer, the Telephone Company will make every reasonable effort to locate and/or recover the data and provide new magnetic tapes to the customer at no additional charge. Such request to recover the data must be made within 30 days from the date the details were initially made available to the customer. If the data can not be recovered, the extent of the Telephone Company's liability for damages shall be limited as set forth in (A) preceding.

(C) In the absence of willful misconduct, no liability for damages to the customer or other person or entity other than as set forth in (A) and (B) preceding shall attach to the Telephone Company for its action or the conduct of its employees in providing Recording Service.

8.1.4 Obligations of the Customer

(A) The customer shall order Recording Service for each end office where the service is desired. The customer shall order Recording Service at least one month prior to the date when the customer message detail is to be recorded.

(B) The customer shall order provision of recorded customer message detail without sorting or name and address information at least one month prior to the date when it wishes to receive the recorded message detail. Any change in the provision of recorded customer message detail without sorting and name and address information to the customer will be accommodated provided the customer gives two weeks advance written notification to the Telephone Company.

(C) The premises of the ordering customer shall provide such signals as may be required for the proper operation of the Telephone Company's automatic message accounting equipment used to perform the detail recordings.

TARIFF BRANCH
RECEIVED
7/17/2006
PUBLIC SERVICE
COMMISSION
OF KENTUCKY

8. Billing and Collection Service (Cont'd)

8.1 Recording Service (Cont'd)

8.1.5 Payment Arrangements and Audit Provisions

(A) Audit Provisions

Upon reasonable written notice by the customer to the Telephone Company, the customer shall have the right through its authorized representative to examine and audit, during normal business hours and at reasonable intervals as determined by the Telephone Company, all such records and accounts as may under recognized accounting practices contain information bearing upon the recording of messages for which amounts may be payable to the customer. Adjustment shall be made by the proper party to compensate for any errors or omissions disclosed by such examination or audit. Neither such right to examine and audit nor the right to receive such adjustment shall be affected by any statement to the contrary, appearing on checks or otherwise, unless such statement expressly waving such right appears in a letter signed by the authorized representative of the party having such right and delivered to the other party.

All information received or reviewed by the customer or its authorized representative is to be considered confidential and is not to be distributed, provided or disclosed in any form to anyone not involved in the audit, nor is such information to be used for any other purpose.

(B) Minimum Period and Minimum Monthly Charge

The minimum period for which Recording Service is provided and for which charges apply is one month for each state in which the service is ordered.

The minimum monthly charges are the charges for customer messages recorded, customer messages assembled and edited (except when Message Processing Service is ordered for the same monthly period) and when ordered by the customer, provision of customer message detail on magnetic tapes or data files. If the service is cancelled or discontinued prior to entering the customer message detail on magnetic tapes or data files, the minimum monthly charge will be the charge for all customer messages recorded, assembled and edited for a 30 day period. The Telephone Company will use the most recent 30 day period for which data is available to determine the minimum charge.

TARIFF BRANCH
RECEIVED
7/17/2006
PUBLIC SERVICE
COMMISSION
OF KENTUCKY

8. Billing and Collection Service (Cont'd)

8.1 Recording Service (Cont'd)

8.1.5 Payment Arrangements and Audit Provision (Cont'd)

(C) Cancellation of Special Order

An customer may cancel a Special Order for Recording Service on any date prior to the service date. The cancellation date is the date the Telephone Company receives written or verbal notice from the customer that the Special Order is to be cancelled. The verbal notice must be followed by written confirmation within 10 days. The service date for Recording Service is the date the customer requests the recordings to start.

When a customer cancels a Special Order for Recording Service after the order date but prior to the start of service, the minimum monthly charges will apply.

(D) Changes To Special Orders

When a customer requests changes to a pending Special Order for Recording Service, The pending Special Order will be cancelled and the requested changes will be undertaken if they can be accommodated by the Telephone Company under a new Special Order. All cancellation charges as set forth in (C) preceding will apply for the cancelled Special Order.

8.1.6 Rate Regulations

(A) For each customer message recorded, the recording changes apply.

The charges for recording and for assembly and editing apply per message recorded and per message assembled and edited whether or not the customer's schedule of rates specifies billing on a per message basis or any other basis.

(B) The per Special Order charge applies for each Special Order accepted by the Telephone Company for Recording Service.

(C) When message detail is entered on a data file or magnetic tape for provision of message detail to a customer, the per tape charge applies for each data file or magnetic tape prepared, and the per record charge applies for each record processed. A record is a logical grouping of information as described in the programs that process the information and load the magnetic tapes or data file. The Telephone Company will determine the charges based on the number of data files or magnetic tapes prepared and on its count of the records processed. The number of records processed will be determined using the number of records input to or the number of records output from the programs that process the information and load the magnetic taper or data file, whichever number of records is higher

TARIFF BRANCH
RECEIVED
7/17/2006
PUBLIC SERVICE
COMMISSION
OF KENTUCKY

8. Billing and Collection Service (Cont'd)

8.2 Billing Service

At the request of a customer, the Telephone company will provide Billing Service.

The Telephone Company will provide Billing Service in its operating territory. The minimum territory for which the Telephone Company will provide Billing Service is its state operating territory.

The Telephone Company will provide two types of Billing Service:

1) Message Billing Service as set forth in 8.2.1
2) Private Line Billing Service as set forth in 8.2.2 following.

The Telephone Company will provide Bill Processing Service and Private Line Billing Service only on the condition that (1) it purchases the accounts receivable, if any, from the IC as set forth in 8.2.3 following or (2) the Telephone Company agrees to act as billing agent for the IC.

The Telephone Company will not render bills under this tariff for the provision and/or delivery of telegrams, flowers, gifts, wine, or other like services that a customer offers.

8.2.1 Message Billing Service

Message Billing Service consists of Message Processing Service and Bill Processing Service. A customer may order Message Processing Service or Bill Processing Service or both services.

(A) General Description

(1) Message Processing Service

Message Processing Service is the transforming of the recorded customer call details into messages in preparation for billing. Message Processing Service includes initial entry and can be provided with or without rating.

Initial data entry is the assembly of recorded customer call details into customer messages. This function includes editing and verification of recorded details to assure that the data required for rating are present.

Rating of customer messages is the computing of applicable charges for each customer message based on the customer provided schedule of rates. Rating also includes the preparation of customer message detail for input to Bill Processing Service, the customer, or other entities.

TARIFF BRANCH
RECEIVED
7/17/2006
PUBLIC SERVICE
COMMISSION
OF KENTUCKY

8. Billing and Collection Service (Cont'd)

8.2 Billing Service (Cont'd)

8.2.1 Message Billing Service (Cont'd)

(A) General Description (Cont'd)

(1) Message Processing Service (Cont'd)

The rating process may be performed by the customer as well as the Telephone Company.

Further, rating is always performed and editing may be performed coincident with the implementation of a change in the customer's schedule of rates.

(2) Bill Processing Service

Bill Processing service is the preparation of bills for message-billed service, bulk-billed service, and optional calling services, mailing of statements of the amounts due for service received from the customer and the collection of deposits and monies due from the end users. Bill processing Service includes message-billed (when necessary) bulk-billed, and optional calling account establishment, posting of rates messages and rate elements, rendering of bills, collection of deposits, receiving payments, maintenance of accounts and treatment of accounts.

(B) Undertaking of the Telephone Company

(1) Message Processing Service

(a) When Message Processing is ordered by a customer, the Telephone Company will process all of the customer messages it possesses in a state as set forth in (b) through (1) following at rates and charges set forth in 17.5.2.

(b) The Telephone Company will provide Message Processing Service only for customer messages originating or recorded within the operating territory of the Telephone Company. The customer messages which the Telephone Company will process may be customer messages from Recording Service as set forth in 8.1 preceding or, at the direction of the customer, other customer messages which are chargeable in accordance with the rate schedule furnished by the customer.

Any sent-paid coin messages provided as input by the customer will be processed.

TARIFF BRANCH
RECEIVED
7/17/2006
PUBLIC SERVICE
COMMISSION
OF KENTUCKY

8. Billing and Collection Service (Cont'd)

8.2 Billing Service (Cont'd)

8.2.1 Message Billing Service (Cont'd)

(B) Undertaking of the Telephone Company (Cont'd)

(1) Message Processing Service (Cont'd)

(c) A record of customer call details is required to provide Message Processing Service. Where a customer subscribes to Recording Service as set forth in 8.1 preceding, those recorded details may be used as the input. Where the customer provides the call details, the records must be in the standard format established by the Telephone Company and delivered to the location specified by the Telephone Company. The Telephone Company will provide to the customer the precise details of the required standard format. If the customer requests the customer provided call details be reprocessed by the Telephone Company because of a customer error, the Telephone Company will reprocess the customer provided call details and the appropriate charges as set forth in 17.5.2 following will apply.

(d) The Telephone Company will develop the customer's schedule of rates into a rating program. The rates for this process are determined on an individual basis. Message processing charges as set forth in 17.5.2(A) and 17.5.2(B) following apply for all customer messages reprocessed.

(e) Where the Telephone Company has rated customer messages which are to be billed to an end user by another Exchange Telephone Company, the Telephone Company will enter the messages on a magnetic tape or data file which can be used for data transmission of the details. When the customer has so arranged with an involved Exchange Telephone Company, the Telephone Company will transmit the rated message details to such other Exchange Telephone Company for billing to end users in its operating territories. When the customer does not have billing arrangements with an Exchange Telephone Company, rated messages for billing to the end users of such an Exchange Telephone Company will be delivered to the customer.

TARIFF BRANCH
RECEIVED
7/17/2006
PUBLIC SERVICE
COMMISSION
OF KENTUCKY

8. Billing and Collection Service (Cont'd)

8.2 Billing Service (Cont'd)

8.2.1 Message Billing Service (Cont'd)

(B) Undertaking of the Telephone Company (Cont'd)

(1) Message Processing Service (Cont'd)

(f) Where the rates for customer services have been implemented under an accounting order pending final approval from a regulatory agency, the Telephone Company will, upon written request from the customer, keep such records as may be required to make any adjustments to the end users as may be ordered by the regulatory agency. The Charges for such a service will be determined on an individual case basis.

(g) The Telephone Company will, upon request, provide the customer the rated message detail.

The rated message detail will be provided on a request by request basis in a format similar to that used by the Telephone Company as input to Bill Processing Service. All rated customer message detail available to the Telephone Company will be provided to the customer. The rated customer message detail will not be sorted to furnish detail by specific end users, groups of end users, by office or by location.

The Telephone Company will provide the customer detail on a magnetic tape. The magnetic tapes will be provided without the return of previously supplied tapes. The Telephone Company will supply the magnetic tapes.

(h) If the customer makes a request within 30 days of the date the customer details were initially made available to the customer, the Telephone Company will make a reasonable effort to recover the customer detail and make it available again to the customer. The charges as set forth in 17.5.2 will apply for all such customer detail provided.

TARIFF BRANCH
RECEIVED
7/17/2006
PUBLIC SERVICE
COMMISSION
OF KENTUCKY

8. Billing and Collection Service (Cont'd)

8.2 Billing Service (Cont'd)

8.2.1 Message Billing Service (Cont'd)

(B) Undertaking of the Telephone Company (Cont'd)

(1) Message Processing Service (Cont'd)

(i) Customer messages which the Telephone Company processes that cannot be rated in accordance with the customer rate schedule will be reviewed by Telephone Company message investigation groups. Upon completion of the review, rated customer messages will be delivered to the customer when the customer orders such service or to Bill Processing Service when the customer orders such service. Unrated messages will be handled in accordance with instructions that have been mutually determined by the Telephone Company and the customer. At the request of the customer, the unrated customer messages will be reviewed for unauthorized use of the customer service by Telephone Company message investigation groups for a period of up to 90 days after the customer message was processed. The appropriate charges, as set forth in 17.5.2, will apply.

(2) Bill Processing Service

Bill Processing Service is the preparation of bills for message-billed service, bulk-billed service, and optional calling services, mailing of statements of the amounts due for service received from the customer and the collection of deposits and monies due from the end users. Bill Processing Service includes message-billed (when necessary) bulk-billed, and optional calling account establishment, posting of rated messages and rate elements, rendering of bills, collection of deposits, receiving payments, maintenance of accounts and treatment of accounts.

TARIFF BRANCH
RECEIVED
7/17/2006
PUBLIC SERVICE
COMMISSION
OF KENTUCKY

8. Billing and Collection Service (Cont'd)

8.2 Billing Service (Cont'd)

8.2.1 Message Billing Service (Cont'd)

(B) Undertaking of the Telephone Company (Cont'd)

(2) Bill Processing Service (Cont'd)

(a) When Bill Processing Service is ordered by a customer, the Telephone Company will establish and maintain end user accounts and prepare and render bills for all customer messages, bulk-billed messages and related rate elements it possesses for a state as set forth in (b) through (n) following at rates and charges as set forth in 17.5.2 following. The Telephone Company will not establish an end user account with any customer balance due. Deposit regulations will be as agreed upon by the Telephone Company and the customer.

In addition, the Telephone Company will, in accordance with Telephone Company deposit regulations, determine and collect a deposit from the end user for the customer service. The Telephone Company will, when necessary in accordance with the Telephone Company deposit regulations, determine and collect the service deposit when an end user account is established or for established accounts when the first customer message is posted to the end user account.

The Telephone Company will, when necessary in accordance with the Telephone Company deposit regulations, maintain a service deposit for each end user account. Service deposits will not be maintained by the individual customer accounts but will be maintained for the end user account in general. The Telephone Company will provide the customer a copy of its service deposit regulations upon requests from the customer.

TARIFF BRANCH
RECEIVED
7/17/2006
PUBLIC SERVICE
COMMISSION
OF KENTUCKY

8. Billing and Collection Service (Cont'd)

8.2 Billing Service (Cont'd)

8.2.1 Message Billing Service (Cont'd)

(B) Undertaking of the Telephone Company (Cont'd)

(2) Bill Processing Service (Cont'd)

(b) The Telephone Company will provide Bill Processing Service for message-billed service, bulk-billed service and related rate elements which are posted to end user accounts located within the operating territory of the Telephone Company only. The Telephone Company will separate the rated customer messages into a message-billed group and a bulk-billed group for application of rates as set forth in 17.5.2 following.

(c) At the request of the customer, the Telephone Company will prepare and distribute customer credit cards by first class U.S. Mail service. The Telephone Company will assign the credit card number will mark its records and files to show that an end user has been issued a customer credit card. The Telephone Company will specify the information it requires to issue a credit card and the format to be used by the customer in furnishing such information. The charges as set forth in section 7 preceding apply. Plastic coated paper cards will be distributed unless the customer requests another type of card be provided. Charges to prepare and distribute other such cards will be developed on an individual case basis. When it becomes necessary as determined by the Telephone Company, to change the credit card number or discontinue the billing of credit card calls to an end user account because of nonpayment of charges or unauthorized use of Telephone Company and customer service offerings, the Telephone Company will notify the customer. The Telephone Company will provide the customer the credit card number, associated end user account name and billing address for the credit card number change or billing discontinued. All charges for calls associated with such a discontinued credit card after the customer has been notified will become the responsibility of the customer. End user questions concerning the issuing of customer credit cards will not be handled by the Telephone Company.

TARIFF BRANCH
RECEIVED
7/17/2006
PUBLIC SERVICE
COMMISSION
OF KENTUCKY

INTRASTATE ACCESS SERVICES TARIFF

8. Billing and Collection Service (Cont'd)

8.2 Billing Service (Cont'd)

8.2.1 Message Billing Service (Cont'd)

(B) Undertaking of the Telephone Company (Cont'd)

(2) Bill Processing Service (Cont'd)

(d) Rated customer messages are required to provide Bill Processing Service. If the customer subscribes to Message Processing Service as set forth in (1) preceding, the rated customer messages may be used as the input. If the customer provides the rated customer messages, those customer messages must be in the standard format established by the Telephone Company and delivered to the location specified by the Telephone Company.

Such customer provided rated message data must identify the end user account to be billed. If the customer provided rated messages must be converted by the Telephone Company to the standard format and the Telephone Company agrees to make the conversion, program development charges as set forth in 17.5.2(C) following apply for the hours required to design, develop, test and maintain the necessary programs.

(e) For end user accounts in its operating territory where the customer has ordered Bill Processing Service, the Telephone Company will bill all rated customer messages provided by the customer.

(f) Upon acceptance by the Telephone Company of a Special Order for Bill Processing Service from a customer, the Telephone Company will determine the conditions and the period of time to implement such service on an individual order basis. Program development charges, as set forth in Section 17.5 following, apply for the hours required to design, develop, test, and maintain the necessary programs including any programs to rate, change the rates of, or change the rate structure of any rate elements associated with the customer services.

(g) The Telephone Company will provide Bill Processing Service only on the condition that (1) it purchases the accounts receivable from the customer as set forth in Section 17.5 following or (2) the Telephone Company agrees to act as billing agent for the customer.

TARIFF BRANCH
RECEIVED
7/17/2006
PUBLIC SERVICE
COMMISSION
OF KENTUCKY

INTRASTATE ACCESS SERVICES TARIFF

8. Billing and Collection Service (Cont'd)

8.2 Billing Service (Cont'd)

8.2.1 Message Billing Service (Cont'd)

(B) Undertaking of the Telephone Company (Cont'd)

(2) Bill Processing Service (Cont'd)

(h) The Telephone Company will not provide any information related to Bill Processing Service accounts under this section of the tariff. Bill Processing Services information may be obtained as set forth in 8.4 following.

(i) The Telephone Company will, at the option of the customer, provide message-billed Bill Processing Service with or without inquiry and bulk-billed Bill Processing Service with or without inquiry. When the Telephone Company provides inquiry, the Telephone Company will be responsible for contacts and arrangements with the customer's end users concerning the billing, collecting, crediting and adjusting of the customer service charges, except prior customer balances due from end users, in accordance with written instructions furnished by the customer. At the request of the customer when the customer has ordered inquiry, the billed customer messages which are removed from an end user's bill in accordance with customer inquiry instructions will be reviewed for unauthorized use of customer service by Telephone Company message investigation groups for a period of up to 90 days after the billed customer message has been removed from an end user's bill. For any billed customer messages removed from an end user's bill in accordance with customer inquiry instructions, the Telephone Company will make appropriate adjustments to the customer's accounts receivable. When the Telephone Company provides Bill Processing Service without inquiry, all contacts from customer end users concerning the customer billed amounts will be referred to the customer. Inquiry will only be provided when the customer is provided Bill Processing Service at the same time for the same state operating area.

(j) The Telephone Company will accept customer gift certificates for payment from end users if the customer agrees in writing to redeem all such gift certificates. The format of the gift certificate must be acceptable to the Telephone Company.

TARIFF BRANCH
RECEIVED
7/17/2006
PUBLIC SERVICE
COMMISSION
OF KENTUCKY

INTRASTATE ACCESS SERVICES TARIFF

8. Billing and Collection Service (Cont'd)

8.2 Billing Service (Cont'd)

8.2.1 Message Billing Service (Cont'd)

(B) Undertaking of the Telephone Company (Cont'd)

(2) Bill Processing Service (Cont'd)

(k) Rated customer messages input to Bill Processing Service which the Telephone Company cannot bill for any reason will be view by the Telephone Company's message investigation groups. Upon completion of the review, the billable messages will be posted and the appropriate charges, as set forth in 17.5 following, will apply. Unbillable messages will be handled in accordance with instructions that have been mutually determined by the Telephone Company and the customer. At the request of the customer, the rated customer messages which cannot be billed to an end user will be reviewed for unauthorized use of customer service by the Telephone Company message investigation groups for a period of up to 90 days after the rated customer message was processed.

(l) The Telephone Company will post rated customer messages to the appropriate end user account when it identifies a customer message to be billed to an end user and will mark the appropriate end user account when a customer credit card is issued to an end user. The Telephone Company will bill to an end user other customer message-billed service charges, such as provision of a credit card, issuing of a credit card, blocking of third number billing, time and rate charges, and subscription charges. Other customer message-related charges, such as directory assistance and DIAL-IT charges, will be billed to the end user based on customer message data received from Message Processing Service or from the customer. The Telephone Company will made adjustments to end user balances due to account for application of credits authorized by customer inquiry instructions and customer furnished statements.

TARIFF BRANCH
RECEIVED
7/17/2006
PUBLIC SERVICE
COMMISSION
OF KENTUCKY

INTRASTATE ACCESS SERVICES TARIFF

8. Billing and Collection Service (Cont'd)

8.2 Billing Service (Cont'd)

8.2.1 Message Billing Service (Cont'd)

(B) Undertaking of the Telephone Company (Cont'd)

(2) Bill Processing Service (Cont'd)

(m) The Telephone Company will establish an end user account for customer bulk-billed service when it receives an order from a customer to perform such activity for a specific end user and will bill customer bulk-billed charges to the end user. The Telephone Company will bill other customer bulk-billed rate elements, such as provision of a bulk-billed service access line, installation of an access line and provision of an access line extension, when it receives a Special Order for such services from a customer. Other customer message-related charges for bulk-billed service, such as directory assistance and DIAL-IT charges, will be billed to the end user based on customer message data received from Message Processing Service or from the customer. The Telephone Company will make adjustments to end user balances due to account for application of credits authorized by customer inquiry instructions and customer furnished statements.

(n) Where the rates for customer services have been implemented under an accounting order pending final approval from a regulatory agency, the Telephone Company will, upon written request from the customer, keep such records as may be required to make any adjustments to the end users as may be ordered by the regulatory agency. The charges for such a service will be determined on an individual case basis.

TARIFF BRANCH
RECEIVED
7/17/2006
PUBLIC SERVICE
COMMISSION
OF KENTUCKY

8. Billing and Collection Service (Cont'd)

8.2 Billing Service (Cont'd)

8.2.1 Message Billing Service (Cont'd)

(C) Liability of the Telephone Company

The Telephone Company liability for Message Billing Service is as follows:

(1) If Bill Processing Service detail is not available because the Telephone Company lost or damaged records or incurred processing system outages, the Telephone Company will attempt to recover the lost customer detail. If the lost customer detail cannot be recovered and the Telephone Company recorded the details, the customer detail and the extent of the Telephone Company's liability for damages will be as set forth in 8.1.3(A) preceding. If the lost customer detail cannot be recovered and the customer provided the detail, the customer will be requested to re-supply the detail. If the customer cannot re-supply the detail, the detail and the extent of the Telephone Company's liability for damages will be as set forth in 8.1.3(A) preceding. This recovered detail will be included in message detail provided to the customer when the customer orders such service and any recovered customer messages will be billed.

(2) When the Telephone Company is notified that, due to its error or omission, incomplete customer detail has been provided, as set forth in 8.2.1(B)(1) preceding and/or 8.4 following, to a customer, the Telephone Company will make a reasonable effort to recover and provide the customer detail to the customer at no additional charge. Such request to recover the customer detail must be made within 30 days from the date the customer detail was initially made available to the customer. If the detail cannot be recovered, the extent of the Telephone Company's liability for damages shall be limited as set forth in 8.1.3(A) preceding.

(3) If the Telephone Company finds, or is notified of, an error in billing to an end user, it will make a reasonable effort to correct the error and bill the appropriate end user within the limits permitted by laws of the state in which it provides the service. If the error is caused by the Telephone Company cannot bill the proper end user in a timely manner, the extent of the Telephone Company's liability for damages will be the known amount misbilled or when the amount misbilled is unknown, limited as set forth in 8.1.3(A).

(4) In the absence of willful misconduct, no liability for damages to the customer or other person or entity other than as set forth in (1), (2) and (3) preceding shall attach to the Telephone Company for its action or the conduct of its employees in providing Message Billing Service.

TARIFF BRANCH
RECEIVED
7/17/2006
PUBLIC SERVICE
COMMISSION
OF KENTUCKY

INTRASTATE ACCESS SERVICES TARIFF

8. Billing and Collection Service (Cont'd)

8.2 Billing Service (Cont'd)

8.2.1 Message Billing Service (Cont'd)

(D) Obligations of the Customer

(1) The customer shall order Message Billing Service s under a Special Order for each state where service is desired. The customer shall be responsible for all balances due from end users that exist prior to ordering Bill Processing Service.

(2) When Message Processing Service is ordered, the customer shall furnish the Telephone Company, an estimate of the number of messages (message capacity), including those messages which will be bulk billed, to be processed.

In addition, when Bill Processing Service is ordered, the customer shall furnish the Telephone Company, for each state and for each year in the order, an estimate of the number of message-billed and/or bulk-billed messages (bill capacity) for which billing is to be provided. Separate estimates shall be furnished by the customer for message-billed messages and bulk-billed messages. The capacity estimate for inquiry for each state and each year shall be the same as that for message-billed and/or bulk-billed messages.

(3) The customer shall furnish all information necessary for the Telephone Company to provide the Message Billing Service, including any per month service charges applicable to an end user and an affidavit that states whether the customer service is subject to any Federal taxes and/or State taxes. When customer messages are to be billed by an entity other than the Telephone Company, the customer shall furnish written instructions as to how the rated customer messages are to be provided to that other entity. If the customer does not furnish complete instructions, all resulting unbillable messages will be delivered to the customer. The information shall be furnished by the customer in a timely manner.

(4) The customer shall furnish to the Telephone Company a written schedule of its rates and charges in sufficient time to allow the Telephone Company to establish a rating program. The customer's rate structure must be consistent with established Telephone Company rating methodologies. The interval required to establish a rating program must be mutually agreeable to the Telephone Company and the customer.

TARIFF BRANCH
RECEIVED
7/17/2006
PUBLIC SERVICE
COMMISSION
OF KENTUCKY

INTRASTATE ACCESS SERVICES TARIFF

8. Billing and Collection Service (Cont'd)

8.2 Billing Service (Cont'd)

8.2.1 Message Billing Service (Cont'd)

(D) Obligations of the Customer (Cont'd)

(5) Reserved For Future Use

(6) The customer shall be responsible for all contact and arrangements with its end users concerning the provision and maintenance of the customer's service, including prior customer balances due from end users.

(7) When the customer orders message-billed or bulk-billed Bill Processing Service with inquiry, the customer shall furnish to the Telephone Company written instructions, which are agreeable to the Telephone Company, for the handling of end user questions about bills.

When the customer orders message-billed or bulk-billed Bill Processing Service without inquiry, the customer shall furnish the Telephone Company with written instructions as to where inquiries are to be referred.

When the customer does not order inquiry service and desires credit adjustments be made to the end user balance due, the customer shall furnish a statement for each end user account where the credit is desired. These statements shall show the customer message, the date the customer message was billed and the amount of the credit. The customer shall notify its end users through its tariff or other appropriate means when the customer handles the bill inquiries. The customer shall furnish the Telephone Company in writing all end user bill adjustment statements.

(8) The customer will immediately redeem all customer gift certificates the Telephone Company receives in payment for any end users charges. The customer agrees to use a gift certificate format which is agreeable to the Telephone Company.

(9) The customer agrees to permit the Telephone Company to, when necessary in accordance with Telephone Company deposit regulations, determine and collect customer service deposits from all end users of the customer's services for which the Telephone Company provides billing for the customer. The customer will notify its end users through its tariffs or other means that the Telephone Company will, when necessary in accordance with Telephone Company deposit regulations, determine and collect customer service deposits. The customer will also include in its tariff and service arrangements and obtain regulatory concurrence for the Telephone Company deposit regulations that the Telephone Company will use to determine and collect end user service deposits.

TARIFF BRANCH
RECEIVED
7/17/2006
PUBLIC SERVICE
COMMISSION
OF KENTUCKY

INTRASTATE ACCESS SERVICES TARIFF

8. Billing and Collection Service (Cont'd)

8.2 Billing Service (Cont'd)

8.2.1 Message Billing Service (Cont'd)

(D) Obligations of the Customer (Cont'd)

(10) When the customer desires that a credit card be issued by the Telephone Company for an end user, the customer shall furnish the credit card information as specified by the Telephone Company. The information shall include a statement from the customer that the end user has requested the credit card. When the customer is notified by the Telephone Company that a customer credit card billing is discontinued, the customer shall notify the appropriate end user. The customer also agrees to be responsible for all charges to the discontinued credit card after receipt of notice of discontinuance and all charges to a customer credit card where the end user states in writing to the Telephone Company that the end user did not request the credit card.

(11) When the customer furnishes recorded customer detail for Message Processing Service and/or rated customer message detail for Bill Processing Service, it shall be responsible to deliver the detail to the location specified by the Telephone company and it shall retain a copy of the detail furnished for at least 90 days.

(E) Payment Arrangements and Audit Provision

(1) Audit Provision

Upon written notice by the customer to the Telephone Company, the customer shall have the right, through its authorized representative, to examine and audit, during normal business hours and at reasonable intervals determined by the Telephone Company, all such records and accounts as may under recognized accounting practices contain information bearing upon the amount payable to the customer. Adjustment shall be made by the proper party to compensate for any errors or omissions disclosed by such examination or audit. Neither such right to examine and audit nor the right to receive such adjustment shall be affected by any statement to the contrary, appearing on checks or otherwise, otherwise, unless such statement expressly waiving such right appears in a letter signed by the authorized representative of the party having such right and delivered to the other party.

Any information received or reviewed by the customer or its authorized representative during the audit is to be considered confidential and not to be distributed, provided or disclosed in any form to anyone not involved in the audit, nor is such information to be used for any other purpose.

TARIFF BRANCH
RECEIVED
7/17/2006
PUBLIC SERVICE
COMMISSION
OF KENTUCKY

INTRASTATE ACCESS SERVICES TARIFF

8. Billing and Collection Service (Cont'd)

8.2 Billing Service (Cont'd)

8.2.1 Message Billing Service (Cont'd)

(E) Payment Arrangements and Audit Provision (Cont'd)

(2) Minimum Period

The minimum period for which Message Billing Service is provided and for which charges apply is one year. If the customer orders Message Processing Service and/or Bill Processing Service for three or five years, then the minimum period and the period for which charges apply is that period ordered by the customer. A minimum period of one, three, or five years, as ordered by the customer, applies for each additional period of service ordered.

If the service is discontinued prior to the end of the period ordered, monthly charges apply for each remaining month and fraction of a month. The monthly charge will be one-twelfth of the minimum yearly charge.

(3) Minimum Order Capacities and Minimum Yearly Charges

Message Billing Service is subject to minimum order capacities and minimum yearly charges. The minimum order capacities are the message capacity and bill capacity as specified in (a) following. The minimum yearly charge as specified in (b) or (c) following, whichever is higher, shall apply.

(a) The message capacity ordered by the customer for any year in a three or five year order for Message Processing Service shall not be lower than 25 percent of the largest message capacity ordered for any year in a three or five year order. The bill capacity ordered by the customer for any year is a three or five year order for Bill Processing Service shall not be lower than 25 percent of the largest bill capacity ordered for any year in a three or five year order. The minimum yearly bill capacity for message-billed messages and bulk-billed messages will be determined separately based on the estimates the customer furnishes as set forth in (D)(2) preceding. The minimum yearly capacity ordered for each year for inquiry shall be the same as that for message-billed and/or bulk-billed messages.

TARIFF BRANCH
RECEIVED
7/17/2006
PUBLIC SERVICE
COMMISSION
OF KENTUCKY

8. Billing and Collection Service (Cont'd)

8.2 Billing Service (Cont'd)

8.2.1 Message Billing Service (Cont'd)

(E) Payment Arrangement and Audit Provision (Cont'd)

(3) Minimum Order Capacities and Minimum Yearly Charges (Cont'd)

(b) For Message Processing Service, the minimum yearly charge is the product of the message capacity per year furnished by the customer as set forth in (D)(2) and (a) preceding and the appropriate Message Processing Service rate times 0.9. The appropriate Message Processing Service rate is the Message Processing Service rate as set forth in (G)(1) following for the specific year period ordered.

For Bill Processing Service, the minimum yearly charge is the product of the message-billed bill capacity and/or bulk-billed bill capacity per year furnished by the customer as set forth in (D)(2) and (a) preceding and the appropriate Bill Processing Service message-billed and/or bulk-billed rate times 0.9. The minimum yearly charge for message-billed messages and bulk-billed messages will be determined separately based on the estimates the customer furnishes as set forth in (D)(2) and (a) preceding. The appropriate Bill Processing Service message-billed rate is the average of the message-billed rates as set forth in (G)(7) following for the specific message-billed service year period ordered. The appropriate Bill Processing Service bulk-billed rate is the bulk-billed rate as set forth in (G)(7) following for the specific bulk-billed service year period ordered.

For inquiry, the minimum yearly charge for message-billed and bulk-billed inquiry will be determined separately. For message-billed inquiry, the minimum yearly charge is the product of the message-billed bill capacity for the year furnished by the customer as set forth in (D)(2) and (a) preceding and the appropriate message-billed inquiry rate times 0.9. For bulk-billed inquiry, the minimum yearly charge is the product of the bulk-billed bill capacity for the year furnished by the customer as set forth in (D)(2) and (a) preceding and the appropriate bulk-billed inquiry rate times 0.9. The appropriate message-billed inquiry rate is the average of the message-billed inquiry rates as set forth in (G)(7) following, for the year period ordered. The appropriate bulk-billed inquiry rate is the bulk-billed inquiry rate as set forth in (G)(7) following for the year period ordered.

TARIFF BRANCH
RECEIVED
7/17/2006
PUBLIC SERVICE
COMMISSION
OF KENTUCKY

8. Billing and Collection Service (Cont'd)

8.2 Billing Service (Cont'd)

8.2.1 Message Billing Service (Cont'd)

(E) Payment Arrangement and Audit Provision (Cont'd)

(3) Minimum Order Capacities and Minimum Yearly Charges (Cont'd)

(c) For Message Process Service, the minimum yearly charge is the difference of the message capacity per year furnished by the customer as set forth in (D)(2) and (a) preceding and the year allowance times the appropriate Message Process Service rate. The year allowance will be determined by the Telephone Company and will be the total customer messages for all customers processed by the Telephone Company in the calendar year prior to the year for the minimum yearly charge times 0.05. The appropriate Message Process Service rate is the Message Process Service rate as set forth in (G)(1) following for specific year period ordered.

For Bill Processing Service, the minimum yearly charge is the difference of the message-billed bill capacity plus the bulk-billed bill capacity for the year furnished by the customer as set forth in (D)(2) and (a) preceding and the year allowance times the appropriate Bill Processing Service, message-billed, or bulk-billed rate. The minimum yearly charge for message-billed messages and bulk-billed messages will be determine separately based on the estimates the customer furnishes as set forth in (D)(2) and (a) preceding and prorate of the allowance. The allowance will be prorated using the ratio of the message-billed bill capacity furnished by the customer to the bulk-billed bill capacity furnished by the customer for the year for which the minimum yearly charge is determined. The year allowance will be determined by the Telephone Company and will be the total customer messages for all customers billed by the Telephone Company in the calendar year prior to the year for the minimum yearly charge times 0.05. The appropriate Bill Processing Service message-billed rate is the average of the message-billed rate as set forth in (G)(7) following for the year period ordered. The appropriate Bill Processing Service bulk-billed rate is the bulk-billed rate as set forth in (G)(7) following for the year period ordered.

For inquiry, the minimum yearly charge will be determined for the year by using the message-billed bill capacity or the bulk-billed bill capacity less a prorate of the year allowance times the appropriate inquiry message-billed or bulk-billed inquiry rate. The minimum yearly charge for message-billed inquiry and bulk-billed inquiry will be determined separately. The prorate of the allowance will be the same as the set forth in the preceding paragraph.

TARIFF BRANCH
RECEIVED
7/17/2006
PUBLIC SERVICE
COMMISSION
OF KENTUCKY

8. Billing and Collection Service (Cont'd)

8.2 Billing Service (Cont'd)

8.2.1 Message Billing Service (Cont'd)

(E) Payment Arrangement and Audit Provision (Cont'd)

(3) Minimum Order Capacities and Minimum Yearly Charges (Cont'd)

(c) (Cont'd)

When the Message Process Service rates are not shown separately and are included in the Bill Processing Service rates, the Message Process Service minimum yearly charges will not apply. When the inquiry rates are not shown separately and are included in the Bill Processing Service message-billed processing and bulk-billed processing rates, the inquiry minimum yearly charges will not apply.

(4) Cancellation of a Special Order

A customer may cancel a Special Order for Message Billing Service on any date prior to the service date. The cancellation date is the date the Telephone Company received written or verbal notice from the customer that the Special Order is to be cancelled. The verbal notice must be followed by written confirmation within ten days. The service date for Message Billing Service is the date the customer and the Telephone Company mutually agree the service is to start.

When a customer cancels a Special Order for Message Billing Service after the order date, but prior to the start of service, a charge equal to the Special Order charges, program development costs and any nonrecoverable capital costs incurred by the Telephone Company will apply to the customer.

(5) Changes to Special Orders

When a customer requests changes to a pending Special Order for Message Billing Service, such changes will be undertaken if they can be accommodated by the Telephone Company. A charge equal to any costs incurred by the Telephone Company because of the change will apply.

TARIFF BRANCH
RECEIVED
7/17/2006
PUBLIC SERVICE
COMMISSION
OF KENTUCKY

8. Billing and Collection Service (Cont'd)

8.2 Billing Service (Cont'd)

8.2.1 Message Billing Service (Cont'd)

(F) Rate Regulations

(1) The Message Processing and Bill Processing Service message charges apply during the yearly periods ordered by the customer. The Telephone Company will not change the rates for the Message Processing Service charges as set forth in 17.5.2(A) following or the Bill Processing Service charges as set forth in 17.5.2(G) following that apply to the customer order during the yearly periods for that specific order. For the purpose of determining the charges applicable to bulk-billed service for Bill Processing Service, a bulk-billed message is a customer message which is used by the Telephone Company to develop the customer bulk-billed charge.

(2) During any yearly period in which the actual customer messages processed and/or billed exceeds the message capacity as stated in the following, additional charges apply. For Message Processing Service, for each customer message processed that exceeds (a) 110 percent of the message capacity ordered for the year or (b) the message capacity ordered plus the year allowance, whichever of (a) or (b) is lower, the appropriate charges for the specific service ordered as set forth in (G)(1) and (g)(2) following apply. The year allowance is the quantity determined as set forth in (E)(3)(c) preceding.

For Bill Processing Service, for each message-billed customer message-billed bill capacity ordered by (b) the message-billed bill capacity plus the prorated allowance, whichever of (a) or (b) is lower as set forth in (G) (7) and (G)(8) following apply. The prorated allowance is the quantity determined as set forth in (E)(3)(c) preceding.

For Bill Processing Service, for each bulk-billed customer message processed that exceeds (a) 110 percent of the bulk-billed bill capacity ordered or (b) the bulk-billed capacity plus the prorated allowance, whichever of (a) or (b) is lower, the appropriate charges for the specific service ordered as set forth in (G)(7) and (G)(8) following apply. The prorated allowance is the prorated quantity determined as set forth in (E)(3)(c) preceding.

For each year for message-billed inquiry, the additional charges will apply for the same capacity that additional charges apply for message-billed messages. The appropriate charges for the specific inquiry ordered as set forth in (G)(7) and (G)(8) apply.

TARIFF BRANCH
RECEIVED
7/17/2006
PUBLIC SERVICE
COMMISSION
OF KENTUCKY

8. Billing and Collection Service (Cont'd)

8.2 Billing Service (Cont'd)

8.2.1 Message Billing Service (Cont'd)

(F) Rate Regulations (Cont'd)

(2) (Cont'd)

For each year for bulk-billed inquiry, the additional charges will apply for the same capacity that additional charges apply for bulk-billed messages. The appropriate charges for the specific inquiry ordered as set forth in (G)(7) and (G)(8) apply.

For each customer message processed and/or billed between message capacity ordered and the allowance (i.e., percent level or order plus allowance level, which applies) specified in the preceding paragraphs, the appropriate rate as set forth in (G)(1) or (G)(7) apply.

The customer, at its option, may order additional capacity for inquiry and capacity required to process and/or bill the additional messages at the rates as set forth in (G) following subject to the minimum period and minimum yearly charges as set forth in (E)(2) and preceding. When more than one order exists at the time for a customer, the rates for inquiry, IC messages processed and/or billed that exceed the total inquiry, message and/or bill capacity, respectively, for all existing orders will be the appropriate rates for the most recent order, plus the appropriate additional inquiry, message and/or bill processing charge as set forth in (G)(2) and (G)(8) following for the most recent order.

(3) The Message-Billed Service charge applies each month that one or more messages or related rate elements are billed to an end user. When both interstate and state customer messages are billed by the Telephone Company to the end user on the same bill for the customer, the Message Billed Service charge times 0.5 applies each month. When more than one copy of the end user bill is provided to the end user, the Message-Billed Service charge applies for each additional copy of the end user bill provided.

(4) A Bulk-Billed Service charge applies each month that one or more bulk-billed charges are billed to an end user. When both interstate and state customer bulk-billed charges are billed by the Telephone Company to the end user on the same bill for the customer, the Bulk-Billed Service Charge times 0.5 applies each month. When more than one copy of the end user bill is provided to the end user, the Bulk-Billed Service charge applies for each additional copy of the end user bill provided.

TARIFF BRANCH
RECEIVED
7/17/2006
PUBLIC SERVICE
COMMISSION
OF KENTUCKY

INTRASTATE ACCESS SERVICES TARIFF

8. Billing and Collection Service (Cont'd)

8.2 Billing Service (Cont'd)

8.2.2 Private Line Billing Service

The Telephone Company will provide Private Line Billing Service (Cont'd) only for those customer private line services for which the Telephone Company is providing Special Access Service. The Telephone Company will not render bills for customer private line services for which it does not provide Special Access Service that are connected at end user premises to customer private line services for which it does render bills.

The Telephone Company will not render bills for usage-based rate elements under this section of the tariff. Usage-based rate elements will be billed as set forth in 8.2.1 preceding.

(A) General Description

Private Line Billing Service includes editing and rating, account establishment, rendering of bills, receiving payments, maintenance of accounts, treatment of accounts and inquiry (when ordered by the customer).

Editing and rating is the examination and identification of all the ratable elements of a customer private line service and the application of the appropriate customer rates and charges to the service. These functions are performed when private line services for a customer's end user are established or changed. Rating is always performed, and editing may be performed, coincident with the implementation of a change in the customer's schedule of rates.

Account establishment is the preparation of a customer end user record so that a bill can be sent to that end user.

Rendering of bills is the preparation and mailing of statements of the amounts due from end users for service received from the customer. These statements may, at Telephone Company choice, be included as part of the regular monthly bill for local telephone exchange service mailed to the end user.

Receiving payment and maintenance of accounts is the collecting of deposits and monies from end users for services furnished by the customer and maintenance of records of all transactions.

TARIFF BRANCH
RECEIVED
7/17/2006
PUBLIC SERVICE
COMMISSION
OF KENTUCKY

8. Billing and Collection Service (Cont'd)

8.2 Billing Service (Cont'd)

8.2.2 Private Line Billing Service (Cont'd)

(A) General Description (Cont'd)

Treatment of accounts is the forwarding of notices of delinquent or unpaid end user accounts, posting credits and adjustments, and when necessary as determined by the Telephone Company, denial of the customer's Special Access Service.

Inquiry is the answering of end user questions about charges for customer services and negotiating of credits and adjustments to end user accounts and review of customer charges which are removed from an end user's bill.

(B) Undertaking of the Telephone Company

(1) When Private Line Billing Service is ordered by a customer, the Telephone Company will establish a Private Line Account, edit and rate the billing detail, bill the end user and maintain and treat the Private Line Account (based on the rate and end user data supplied by the customer) at the rates and charges set forth in 17.5.3 following, as set forth in (2) through (14) following. The Telephone Company will not establish a Private Line end user account with any customer balance due. In addition, the Telephone Company will, in accordance with Telephone Company deposit regulations, determine and collect a deposit from the end user for the customer service. The Telephone Company will, when necessary in accordance with Telephone Company deposit regulations, determine and collect the service deposit when an end user account is established. The Telephone Company will, when necessary in accordance with Telephone Company deposit regulations, maintain a service deposit balance for each end user account. The Telephone Company will provide the customer a copy of its deposit regulations upon request from the customer.

The Telephone Company will make adjustments to end user balances due to account for application of credits authorized by customer furnished statements.

(2) Private Line Billing Service records and end user accounts will be maintained by the Telephone Company in a standard format in order to identify the end user and bill the ratable elements. The Telephone Company will establish the format it will use to bill private line services and provide it to the customer. If, in the course of Telephone Company business, it is necessary to change these formats, the Telephone Company will notify the involved customers six months prior to the change.

TARIFF BRANCH
RECEIVED
7/17/2006
PUBLIC SERVICE
COMMISSION
OF KENTUCKY

INTRASTATE ACCESS SERVICES TARIFF

8. Billing and Collection Service (Cont'd)

8.2 Billing Service (Cont'd)

8.2.2 Private Line Billing Service (Cont'd)

(B) Undertaking of the Telephone Company (Cont'd)

(3) The Telephone Company will develop the customer's schedule of rates and charges into a rating program. Program development charges, as set forth in 17.5.3(C) following, apply for the hours required to design, develop, test and maintain the necessary programs.

(4) Upon acceptance by the Telephone Company of a Special Order for Private Line Billing Service from a customer, the Telephone Company will determine the period of time to implement such service on an individual case basis.

(5) Changes in the rate levels of customer services to be billed will normally be implemented within 60 days after receipt of a Special Order from the customer requesting such changes. Such changes will require modifications of the rating program. Program development charges, set forth in 17.5.3(C), apply for the hours required to design, develop, test and maintain the necessary program changes.

(6) Changes in the rate structure of the customer services to be billed also require a change in the rating programs. When the Telephone Company determines that it can accommodate the changes, the conditions and the period of time required to make such changes will be determined on an individual case basis. Program development charges, as set forth in 17.5.3(C), apply for the hours required to design, develop, test and maintain the necessary program changes.

(7) The Telephone Company will not provide any information related to Private Line Billing Service accounts under this section of the tariff. Private Line Billing Service information may be obtained as set forth in 8.4 following.

TARIFF BRANCH
RECEIVED
7/17/2006
PUBLIC SERVICE
COMMISSION
OF KENTUCKY

8. Billing and Collection Service (Cont'd)

8.2 Billing Service (Cont'd)

8.2.2 Private Line Billing Service (Cont'd)

(B) Undertaking of the Telephone Company (Cont'd)

(8) The Telephone Company will, at the option of the customer, provide Private Line Billing with or without inquiry. When the Telephone Company provides Private Line Billing with inquiry, the Telephone Company will be responsible for contacts and arrangements with the customer's end users concerning the billing, collecting. crediting and adjusting of the customer service charges, except prior customer balances due from end users, in accordance with written instructions furnished by the customer. At the request of the customer, the billed customer charges which are removed from the end user bill in accordance with the customer inquiry instructions will be reviewed for unauthorized use of the customer service by Telephone Company message investigation groups for a period of up to 90 days after the billed customer charges have been removed from the end user's bill. For any billed customer charges which are removed from an end user's balance due in accordance with the customer's instructions, the Telephone Company will make an appropriate adjustment to the customer's accounts receivable. When the Telephone Company provides Private Line Billing without inquiry, all contacts from customer end users concerning the customer's billed amounts will be referred to the customer and the Telephone Company will only be responsible for contacts with customer's end users concerning the collection of customer service charges, except prior customer balances due from end users. Inquiry will only be provided for those end user accounts for which the customer has ordered Private Line Billing.

(9) When the Telephone Company encounters bills which are to be rendered to end users or end user billing addresses not located in the Telephone Company's operating territory or in a state where Private Line Billing Service has not been ordered, such bills will be handled as follows:

(a) If the bill to the end user is for a service for which the Telephone Company provides a Special Access Service to the customer and the customer has ordered the appropriate Private Line Billing Service, the Telephone Company will bill the end user.

(b) In all other situations, the bill will be delivered to the customer and the customer shall be responsible to furnish an accounts receivable adjustment to the Telephone Company as set forth in 8.2.3 following.

TARIFF BRANCH
RECEIVED
7/17/2006
PUBLIC SERVICE
COMMISSION
OF KENTUCKY

INTRASTATE ACCESS SERVICES TARIFF

8. Billing and Collection Service (Cont'd)

8.2 Billing Service (Cont'd)

8.2.2 Private Line Billing Service (Cont'd)

(B) Undertaking of the Telephone Company (Cont'd)

(10) The Telephone Company will accept customer gift certificates for payment from end users if the customer agrees in writing to redeem all such gift certificates. The format of the gift certificates must be acceptable to Telephone Company.

(11) Where the rates for customer services have been implemented under an accounting order pending final approval from a regulatory agency, the Telephone Company will, upon written request from the customer, keep such records as may be required to make any adjustments to the end users as may be ordered by the regulatory agency. The charges for such a service will be determined on an individual case basis.

(12) The Telephone Company will provide Private Line Billing Services under a Special Order. For all Private Line Billing Services other than establishment of or changes to end user account data, establishment of or changes to end user account rate elements and changes to end user balances due, the Private Line Billing Service Special Order charge as set forth in 17.5.3(E) following will apply to orders accepted by the Telephone Company. The format of this Special Order will be specified by the Telephone Company.

(13) The Telephone Company will arrange with the customer to accept under a Special Order end user account information to establish and change end user account data, establish and change end user account rate elements and change end user balances due. The methods, procedures and manner in which the end user account data and changes are forwarded to the Telephone Company must be agreeable to the Telephone Company. The charges to handle such Special Orders will be determined on an individual case basis.

(14) If the customer requests the Private Line bills be reprocessed by the Telephone Company because of a customer error, the Telephone Company will treat the reprocessing as a rate level or rate structure change. Determination of whether the reprocessing is a rate level change or rate structure change will be made by the Telephone Company based on the Special Order the Telephone Company receives from the customer. All appropriate charges as set forth in 17.5.3 will apply.

TARIFF BRANCH
RECEIVED
7/17/2006
PUBLIC SERVICE
COMMISSION
OF KENTUCKY

INTRASTATE ACCESS SERVICES TARIFF

8. Billing and Collection Service (Cont'd)

8.2 Billing Service (Cont'd)

8.2.2 Private Line Billing Service (Cont'd)

(C) Liability of the Telephone Company

Notwithstanding 2.1.3 preceding, the Telephone Company liability for Private Line Billing Service is as follows:

(1) If Private Line Billing detail is not available because the Telephone Company lost or damaged records or incurred processing system outages, the Telephone Company will recover the lost detail based on previously received information. This recovered detail will be provided to the customer if the customer has ordered the appropriate Billing Information Service as set forth in 8.4 following. If the detail cannot be recovered, the extent of the Telephone Company's liability for damages will be the known amount not billed or when the amount not billed is unknown, no more than 3 months charges for the services not billed.

(2) When the Telephone Company is notified that, due to its error or omission, incomplete detail has been provided to the customer when such detail has been ordered as set forth in 8.4 following, the Telephone Company will make a reasonable effort to recover the detail and provide such information to the customer at no additional charge to the customer. Such request to recover the detail must be made within 30 days from the date the details were initially made available to the customer. If the detail cannot be recovered, the extent of the Telephone Company's liability for damages will be the known amount not billed or when the amount not billed is unknown, no more than 3 months charges for the services not billed.

(3) If the Telephone Company finds, or is notified of, an error in billing to an end user, it will make a reasonable effort to correct the error and bill the appropriate end user within the limits permitted by laws of the state in which it provides the service. If the error is caused by the Telephone Company and the Telephone Company cannot timely bill the proper end user, the extent of the Telephone Company's misbilled or when the amount misbilled is unknown, no more than 3 months charges for the services misbilled.

(4) In the absence of willful misconduct, no liability for damages to the customer or other person or entity other than that as set forth in (1), (2) and (3) preceding shall attach to the Telephone Company for its action or the conduct of its employees in providing Private Line Billing Service.

TARIFF BRANCH
RECEIVED
7/17/2006
PUBLIC SERVICE
COMMISSION
OF KENTUCKY

INTRASTATE ACCESS SERVICES TARIFF

8. Billing and Collection Service (Cont'd)

8.2 Billing Service (Cont'd)

8.2.2 Private Line Billing Service (Cont'd)

(D) Obligations of the Customer

(1) The customer shall order Private Line Billing Service under a Special Order for each state where service is desired. When Private Line Billing Service is ordered initially, the customer shall order the service for at least one year. Thereafter, upon six months written notice, additional service may be ordered for a minimum of one year and the rates and charges as set forth in 17.5.3 following will apply. Not later than six months prior to the end of an order period, the customer shall notify the Telephone Company in writing if service is to be discontinued at the end of the period. If no notice is received from the customer, the Telephone Company will automatically extend the service for an additional year, using the most recent 12 months of bill capacity provided. All appropriate rates and charges as set forth in 17.5.3 following for another year will apply and the minimum monthly charges will be based on the most recent 12 months of bill capacity provided. All appropriate rates and charges as set forth in 17.5.3 following for another year will apply and the minimum monthly charges will be based on the most recent 12 months of bill capacity provided. The customer will be notified by the Telephone Company when such an extension is made.

(2) When Private Line Billing Service is ordered, the customer shall furnish the Telephone Company for each state and for each year in the order an estimate of the average number of bills (bill capacity) to be rendered each year.

(3) The customer shall furnish in the format specified by the Telephone Company all information necessary for the Telephone Company to provide the Private Line Billing Service including an affidavit that states whether the customer Private Line Service is subject to any Federal taxes and/or State taxes. When customer bills are to be rendered to locations not in the operating territory of the Telephone Company, the customer shall furnish an address where the bills are to be sent. If the customer does not furnish an address, all unaddressable bills will be delivered to the customer. The information shall be furnished by the customer in a timely manner.

(4) The customer shall furnish to the Telephone Company a written schedule of its service rates and charges in sufficient time to allow the Telephone Company to establish a rating program. The interval required to establish a rating program must be mutually agreed to by the Telephone Company and the customer.

TARIFF BRANCH
RECEIVED
7/17/2006
PUBLIC SERVICE
COMMISSION
OF KENTUCKY

INTRASTATE ACCESS SERVICES TARIFF

8. Billing and Collection Service (Cont'd)

8.2 Billing Service (Cont'd)

8.2.2 Private Line Billing Service (Cont'd)

(D) Obligations of the Customer (Cont'd)

(5) When the customer orders Private Line Billing Service, it shall authorize the Telephone Company in writing to deny service to end users for nonpayment. If that authorization is not received, Private Line Billing Service will not be provided.

(6) The customer shall be responsible for all contacts and arrangements, including prior customer balances due from end users, with its end users concerning the provision and maintenance of the customer's services.

(7) When the customer orders Private Line Billing Service with inquiry, the customer shall furnish the Telephone Company written instructions which are agreeable to the Telephone Company, for the handling of end user questions about bills.

When the customer orders Private Line Billing Service without inquiry, the customer shall furnish the Telephone Company with written instructions as to where inquiries are to be referred. When the customer does not order Telephone Company Inquiry service and desires credit adjustments be made to the balances due from an end user, the customer shall furnish a statement for each end user account where the credit is desired. These statements shall show the rate element to be credited, the date the rate element was billed and the amount of the credit.

The customer shall notify its end users through its tariff or other appropriate means when the customer handles the bill inquiries. The customer shall furnish the Telephone Company in writing all bill adjustments as set forth in 8.2.3 following.

(8) The customer will immediately redeem all customer gift certificates that the Telephone Company receives in payment for end user charges. The customer agrees to use a gift certificate format which is agreeable to the Telephone Company.

(9) The customer agrees to permit the Telephone Company to, when necessary in accordance with Telephone Company deposit regulations, determine and collect customer service deposits from all end users of the customer's services for which the Telephone Company provides billing for the customer. The customer will notify its end users through its tariffs or other means that the

TARIFF BRANCH
RECEIVED
7/17/2006
PUBLIC SERVICE
COMMISSION
OF KENTUCKY

INTRASTATE ACCESS SERVICES TARIFF

8. Billing and Collection Service (Cont'd)

8.2 Billing Service (Cont'd)

8.2.2 Private Line Billing Service (Cont'd)

(E) Payment Arrangements and Audit Provisions

(1) Audit Provisions

Upon reasonable written notice by the customer to the Telephone company, the customer shall have the right through its authorized representative to examine and audit, during normal business hours and at reasonable intervals as determined by the Telephone Company, all such records and accounts as may under recognized accounting practices contain information bearing upon the amount payable to the customer. Adjustment shall be made by the proper party to compensate for any errors or omissions disclosed by such examination or audit. Neither such right to examine and audit nor the right to receive such adjustment shall be affected by any statement to the contrary, appearing on checks or otherwise, unless such statement expressly waiving such right appears in a letter signed by the authorized representative of the party having such right and delivered to the other party.

All information received or reviewed by the customer or its authorized representative is to be considered confidential and not to be distributed, provided or disclosed in any form to anyone not involved in the audit, nor is such information to be used for any other purpose.

(2) Minimum Periods

The minimum period for which Private Line Billing Service is provided, and for which charges apply, is one year.

A minimum period of one year applies for each additional period of service ordered.

When service is discontinued prior to the expiration of a minimum period, the minimum monthly charge is applicable for each month and fraction of month remaining in the minimum period.

TARIFF BRANCH
RECEIVED
7/17/2006
PUBLIC SERVICE
COMMISSION
OF KENTUCKY

INTRASTATE ACCESS SERVICES TARIFF

8. Billing and Collection Service (Cont'd)

8.2 Billing Service (Cont'd)

8.2.2 Private Line Billing Service (Cont'd)

(E) Payment Arrangements and Audit Provisions (Cont'd)

(3) Minimum Monthly Charges

(a) During the initial year minimum period, there is a minimum monthly charge based on the customer's estimate of the number of bills to be rendered during that period. The minimum monthly charge is the charge for Bill Rendering, as set forth in 17.5.3(B), for 75 percent of the monthly volume. The monthly volume is 1/12 of the bill capacity ordered during the initial year.

If the actual monthly volume during any consecutive three month period exceeds 1/12 of the bill capacity ordered by 50 percent or more per month, a new minimum monthly charge will be established. The new charge is the charge for Bill Rendering, as set forth in 17.5.3(B), for the monthly average of the actual volume used during those three months.

(b) During each additional yearly minimum period, the minimum monthly charge is the charge for Bill Rendering, as set forth in 17.5.3(B), for the monthly average of the actual volume of bills rendered during the previous 12 months.

If the actual monthly volume during any consecutive three month period exceeds the monthly average by 50 percent or more per month, a new minimum monthly charge will be established. The new charge is the charge for Bill Rendering, as set forth in 17.5.3(B) following, for the monthly average of the actual volume used during those three months.

TARIFF BRANCH
RECEIVED
7/17/2006
PUBLIC SERVICE
COMMISSION
OF KENTUCKY

INTRASTATE ACCESS SERVICES TARIFF

8. Billing and Collection Service (Cont'd)

8.2 Billing Service (Cont'd)

8.2.2 Private Line Billing Service (Cont'd)

(E) Payment Arrangements and Audit Provisions (Cont'd)

(4) Cancellation of a Special Order

A customer may cancel a Special Order for Private Line Billing Service on any date prior to the service date. The cancellation date is the date the Telephone Company receives written or verbal notice from the customer that the Special Order is to be cancelled. The verbal notice must be followed by written confirmation within 10 days. The service date for Private Line Billing Service is the date that the customer and the Telephone Company mutually agree service is to start.

When a customer cancels a Special Order for Private Line Billing Service after the order date but prior to the start of service, a charge equal to the Special Order charges, program development costs and any nonrecoverable capital costs incurred by the Telephone Company will apply to the customer.

When a customer requests changes to a pending Special Order for Private Line Billing Service, such changes will be undertaken if they can be accommodated by the Telephone Company. A charge equal to any costs incurred by the Telephone Company because of the change will apply.

TARIFF BRANCH
RECEIVED
7/17/2006
PUBLIC SERVICE
COMMISSION
OF KENTUCKY

8. Billing and Collection Service (Cont'd)

8.2 Billing Service (Cont'd)

8.2.2 Private Line Billing Service (Cont'd)

(F) Rate Regulations

(1) The Private Line Billing Service Special Order charge applies for each Special Order for Private Line Billing Service, other than establishment of or changes to end user account data, establishment of or changes to end user account rate elements or changes to end user balances due, accepted by the Telephone Company.

(2) The end user account activity charge applies whenever an end user account is established or changed pursuant to a Special Order from a customer and/or whenever a nonrecurring or recurring customer rate element or balance due is added to or changed in the account.

An end user account is a record for a Private Line Billing Service which has a unique name and address and billing number identification, assigned by the Telephone Company, to which a bill is rendered.

The end user account activity Special Order charge always applies and the end user account establishment and change charge, end user account rate element rate level change charge or the end user account rate element rate structure change charge may apply depending on the activity ordered by the customer as set forth in (a), (b), (c) and (d) following.

(a) The end user account activity Special Order charge applies whenever the customer furnishes to the Telephone Company end user account information that establishes or changes the information or rates or balance due associated with an end user account.

(b) The end user account establishment and change charge applies whenever customer furnished information is used by the Telephone Company to establish or change end user account data or rate elements or balance due, except for information to change end user account rate element rate levels or rate structure. End user account rate element rate level and rate structure changes charges are applied as set forth in (c) and (d) following.

The end user account establishment and change charge applies for each account established, rate element established, account changed and rate element changed and balance due changed.

TARIFF BRANCH
RECEIVED
7/17/2006
PUBLIC SERVICE
COMMISSION
OF KENTUCKY

INTRASTATE ACCESS SERVICES TARIFF

8. Billing and Collection Service (Cont'd)

8.2 Billing Service (Cont'd)

8.2.2 Private Line Billing Service (Cont'd)

(F) Rate Regulations (Cont'd)

(2) (Cont'd)

(c) The end user account rate element rate level change charge applies whenever customer furnished information is used by the Telephone Company to change an end user account rate element rate level. The charge applies for each end user account rate element rate level changed.

(d) The end user account rate element rate structure change charge applies whenever customer furnished information is used by the Telephone Company to change an end user account rate element rate structure. The charges to make the end user account rate element rate structure changes will be determined on an individual case basis.

(3) The bill rendering charge applies each month that one or more charges is billed by the issuing of a statement to an end user account. When both interstate and state private line service charges are billed by the Telephone Company to the end user on the same bill for the customer, the Bill rendering charge times 0.5 applies each month.

(4) The basic per hour rate and the premium per hour rate for program development is for the use of one hour of one Telephone Company programmer's time.

(5) The Telephone Company will keep a count of the hours and fraction thereof used by Telephone Company personnel to provide program development and will bill the customer in accordance with these records. The hours for each order will be summed and then rounded to the nearest hour, except that when the total is less than an hour, one hour will be used to determine the charges.

TARIFF BRANCH
RECEIVED
7/17/2006
PUBLIC SERVICE
COMMISSION
OF KENTUCKY

8. Billing and Collection Service (Cont'd)

8.2 Billing Service (Cont'd)

8.2.3 Purchase of Accounts Receivable

The Telephone Company will, unless the Telephone Company decides to act as billing agent for the customer, purchase from the customer its accounts receivable that arise from bills rendered by the Telephone Company to that customer's end users. The purchase of accounts receivable will be limited to amounts due the customer when the Telephone Company provides Bill Processing Service and/or Private Live Billing Service for that customer. After a customer orders Bill Processing Service and/or Private Line Billing Service and the Telephone Company is purchasing the customer's accounts receivable, the customer is prohibited from assigning, transferring, selling exchanging or giving these accounts receivable to any other entity or person. The customer will provide a written assurance to the Telephone Company as to such forbearance and any such assignment, transfer, sale, exchange or gift is null and void and will subject the customer to all liabilities, expenses, costs including attorney fees expended and incurred by the Telephone Company in pursuing exclusive ownership to the accounts receivable.

The Telephone Company's purchase of a customer's accounts receivable shall be with recourse adjustments as set forth in (B) following to account for amounts due the customer that the Telephone Company is unable to collect from the end users which use the customer's services. The amounts due the customer for the purchase of its accounts receivable will be determined as follows:

(A) Total Current Amount Billed

The Telephone Company for each end user bill day (i.e., the billing date on a bill for an end user of a customer's service) will determine from its records the total current amount lawfully billed to the customer's end users for customer services, including all taxes applicable to such services. A Total Current Amount Billed will be determined for each customer for each end user bill day.

(B) Recourse Adjustments

For each bill day, the Telephone Company will make recourse adjustments to the Total Current Amount Billed as follows:

TARIFF BRANCH
RECEIVED
7/17/2006
PUBLIC SERVICE
COMMISSION
OF KENTUCKY

INTRASTATE ACCESS SERVICES TARIFF

8. Billing and Collection Service (Cont'd)

8.2 Billing Service (Cont'd)

8.2.3 Purchase of Accounts Receivable (Cont'd)

(B) Recourse Adjustments (Cont'd)

(1) End User Adjustments

For each bill day, the Telephone Company will subtract from the Total Current Amount Billed the lawfully billed amounts which the Telephone Company removes from end users balances due in accordance with customer inquiry instructions. In addition, for each bill day, the Telephone Company will subtract from the Total Current Amount Billed, an amount that equals the face value of any customer gift certificates (or its predecessor company's gift certificates) the Telephone Company has in its possession. The customer gift certificates the Telephone Company possesses will be returned to the customer.

(2) Telephone Company and Customer Adjustments

For each bill day, the Telephone Company will subtract from the Total Current Amount Billed amounts for end user bills which the Telephone Company delivers to the customer and amounts for gross receipts taxes, if any, the Telephone Company is legally obligated to pay in connection with accounts purchased by and amounts billed and collected by the Telephone Company pursuant to 8.2.1 and 8.2.2 preceding. In addition, for each bill day, the Telephone Company may make adjustments to the Total Current Amount Billed to account for amounts on statements received from the customer for additions or subtractions to an end user balance due for services billed in prior periods. Also, each bill day, the Telephone Company may make adjustments to the Total Current Amount Billed to account for additions and subtractions for customer or Telephone Company prior billing period errors.

(3) Uncollectable Adjustments

For each bill day, the Telephone Company will subtract from the Total Current Amount Billed an amount for uncollectables. Uncollectables are amounts billed by the Telephone Company to end users on Final customer Bills that are added to the uncollectable (realized) Accounts of the Telephone Company. The Telephone Company will determine the customer amount for uncollectables for each bill day by multiplying the Total Current Amount Billed by the customer uncollectable factor rounded up to the nearest 1/1000th as determined in (a) or (b) following.

TARIFF BRANCH
RECEIVED
7/17/2006
PUBLIC SERVICE
COMMISSION
OF KENTUCKY

INTRASTATE ACCESS SERVICES TARIFF

8. Billing and Collection Service (Cont'd)

8.2 Billing Service (Cont'd)

8.2.3 Purchase of Accounts Receivable (Cont'd)

(B) Recourse Adjustments (Cont'd)

(3) Uncollectable Adjustments (Cont'd)

(a) To determine the customer uncollectable factor, except for the initial three months that Bill Processing Services and/or Private Line Billing Service is provided to the customer, the Telephone Company will determine from its records the dollar amount lawfully billed on Final Customer Bills which, after standard collection efforts are completed, is added to its uncollectable (realized) accounts (uncollectable amount) for bills rendered to end users in the most recent 3 month period. This uncollectable amount will include adjustments to account for any payments received by the Telephone Company for outstanding Final Customer Bill amounts that pre-date the most recent 3 month period and any deposits held by the Telephone Company for services provided to the end users where Final Customer Bills have been rendered. The uncollectable amount (including where necessary the customer's or its predecessor company's history of uncollectable to develop a full recent 3 month period) will be used by the Telephone Company in an uncollectable apportionment study to determine the realized uncollectable amount for each customer which is provided Bill Processing Service and/or Private Line Billing Service by the Telephone Company for the most recent 3 month period. This realized uncollectable amount for a customer will, after the adjustment to account for customer amounts for uncollectables for the previous 3 month period which were greater or lesser than the realized uncollectable amount for the same 3 month period, be divided by the Total Current Amount Billed for the customer for the same most recent 3 month period to develop a customer uncollectable factor. This factor will be used by the Telephone Company for the next 3 months to determine the customer amount for uncollectables. Just prior to the end of the 3 month period, the Telephone Company will determine a new customer uncollectable factor in the same manner as above for the ensuing 3 month period.

TARIFF BRANCH
RECEIVED
7/17/2006
PUBLIC SERVICE
COMMISSION
OF KENTUCKY

8. Billing and Collection Service (Cont'd)

8.2 Billing Service (Cont'd)

8.2.3 Purchase of Accounts Receivable (Cont'd)

(B) Recourse Adjustments (Cont'd)

(3) Uncollectable Adjustments (Cont'd)

(b) When a customer orders Bill Processing Service and/or Private Line Billing Service, the customer at the time such services are ordered shall provide to the Telephone Company a history of its or its predecessor company's uncollectables. This history of uncollectables shall indicate by month its total amounts billed and its uncollectable amounts. The Telephone Company will use these data to develop the customer uncollectable factor for the first 3 months. To the extend that such customer or its predecessor company data do not exist, then the customer uncorrectable factor for the first 3 month period will be determined on an individual case basis. The customer uncollectable factor developed either from customer history or on an individual case basis will be used to determine the customer amount for uncollectable for the first 3 month period.

(C) Payments of Net Purchase Amount to the Customer

(1) The Telephone Company will purchase accounts receivable from the customer on each end user bill day for an amount (purchase amount) which equals the Total Current Amount Billed as set forth in (A) preceding after known adjustments as set forth in (B) preceding have been made. On the date (payment date) determined by adding 31 days to the end user bill day or on the next bill day (i.e., same date in the following month as the bill date), whichever is the shortest interval, except as provided herein, the Telephone Company will remit payment to the customer for the purchase amount less additional adjustments as set forth in (B)(1) and (B)(2) preceding (net purchase amount) received by the Telephone Company prior to the payment date. Payment will be made in immediately available funds. If such payment date would cause payment to be due on a Saturday, Sunday, or Holiday (i.e., New Year's Day, Independence Day, Labor Day, Thanksgiving Day, Christmas Day, the Second Tuesday in November and a day when Washington's Birthday, Memorial Day or Columbus Day is legally observed), payment for the net purchase amount will be due to the customer as follows:

If such payment date falls on a Sunday or on a Holiday which is observed on a Monday, the payment date shall be the first non-Holiday day following such Sunday or Holiday. If such payment date falls on a Saturday or on a Holiday which is observed on Tuesday, Wednesday, Thursday, or Friday, the payment date shall be the last non-Holiday day preceding such Saturday or Holiday.

TARIFF BRANCH
RECEIVED
7/17/2006
PUBLIC SERVICE
COMMISSION
OF KENTUCKY

8. Billing and Collection Service (Cont'd)

8.2 Billing Service (Cont'd)

8.2.3 Purchase of Accounts Receivable (Cont'd)

(C) Payments of Net Purchase Amount to the Customer (Cont'd)

(2) Further, if any portion of the net purchase amount is not received by the customer by the payment date as set forth in (1) preceding, or if any portion of the net purchase amount is received by the customer in funds which are not immediately available to the customer, then a late payment penalty shall be due the customer. The late payment penalty shall be the portion of the net purchase amount not received by the payment date times a late factor. The late factor shall be the rate as set forth in N.C.U.C. Commission Rule R12-9:

Any late payment penalty will be included with the next Telephone Company payment to the customer.

(3) Also, if any adjustment that reduces an end user balance due is received by the Telephone Company from the customer after the date the Telephone Company billed the charges to be adjusted to the end user plus 45 days (billed plus date), then a late payment penalty shall be due the Telephone Company. The late payment penalty shall be the adjustment amount times a late factor. The late factor shall be the rate as set forth in N.C.U.C Commission Rule R12-9.

Any late payment penalty will be included with the adjustment made by the Telephone Company to the customer's Total Current Amount Billed.

(D) Netting of Customer Access Service Charges and Net Purchase

When a payment for customer Access Service Charges under this tariff is due to the Telephone Company from the customer on the same payment date that a net purchase amount is due to the customer from the Telephone Company, the Telephone Company may, with at least a 31 day notice to the customer, net the payment for customer Access Service Charges with the net purchase amount. The Telephone Company will pay the net amount to the customer on the payment date when such net amount is due the customer or require the customer to pay the Telephone Company the net amount when such net amount is due the Telephone Company. If either party does not make the payment on the payment date, a late payment penalty as set forth in (C).

Upon request from the customer, the Telephone will provide a copy of its methods and procedures used to determine the amounts named in this section (i.e., 8.2.3 Purchase of Accounts Receivable) to the authorized representative of the customer who is responsible for auditing these amounts.

TARIFF BRANCH
RECEIVED
7/17/2006
PUBLIC SERVICE
COMMISSION
OF KENTUCKY

8. Billing and Collection Service (Cont'd)

8.2 Billing Service (Cont'd)

8.2.4 Billing Arrangements When the Telephone Company Acts as Billing Agent for the Customer

When the Telephone Company agrees to act as billing agent for the customer, the billing service, payment arrangements and ownership of the accounts receivable will be as follows:

(A) The billing services, including the collection from end users of monies for the customer accounts receivable that arise from bills rendered by the Telephone Company to that customer's end users, provided by the Telephone Company will be as set forth in 8.2.1 and 8.2.2 preceding.

(B) For the customer accounts receivable that arise from bills rendered by the Telephone Company to that customer's end users, the Total Current Amount Billed and the Recourse Adjustments will be determined as set forth in 8.2.3 preceding. The payment of the net monies due the customer will be handled as set forth in 8.2.3 (C) preceding.

(C) The ownership of the customer accounts receivable will not be transferred by the customer to the Telephone Company. When the customer discontinues Billing Service provided under this tariff where the Telephone Company is acting as billing agent for the customer, the Telephone Company will determine and make a final payment to the customer as set forth in (B) preceding. This final payment shall be considered to be all of the remaining monies due the customer for the bills rendered to the customer's end users by the Telephone Company. When the Telephone Company discontinues billing the customer's end users for customer services, any deposits for customer services will be returned to the appropriate end user in accordance with Telephone Company final billing procedures.

8.2.5 Clearinghouse Agent Provisions

(A) General Description

For the purposes herein, the Company will provide billing and collection services to clearinghouse agents who are authorized to act as agents for certified ICs. When a clearinghouse agent acts as an agent for ICs, the clearinghouse agent will comply with the same requirements and obligations that apply to ICs under this Tariff. ***The Company will also provide billing and collection services to clearinghouse agents who are authorized to act as agents for certified Customer Owned Coin Operated Telephone (COCOT) Providers provided that the COCOT Providers comply with the following requirements:***

- Only automated collect calls may be billed. Automated collect calls are placed and billed to the called telephone number without the assistance or intervention of a human operator. The COCOT Providers must apply for and receive specific authority to employ automated collect telephones;

TARIFF BRANCH
RECEIVED
7/17/2006
PUBLIC SERVICE
COMMISSION
OF KENTUCKY

8. Billing and Collection Service (Cont'd)

8.2 Billing Service (Cont'd)

8.2.5 Clearinghouse Agent Provisions (Cont'd)

(A) General Description (Cont'd)

- Collect calls will not be billed which have not been actively accepted by the called party (e.g., calls made from automated sets that default to billing to called party if called party does not disconnect within a given time period);

- All requirements and obligations that apply to ICs under this Tariff will apply;

- COCOT Providers can only purchase billing and collection services through clearinghouse agents; and

- The name and telephone number of the COCOT Provider must appear on the end user's bill. The COCOT Provider must perform its own inquiry and may not purchase it from the Company or the clearinghouse.

(B) Undertaking of the Company

When a clearinghouse agent acts as the agent for certified ICs ***or COCOT Providers*** with respect to the provision of billing and collection for telecommunication services, the name of the certified IC ***or COCOT Provider*** which transported the call (as provided to the Company by the clearinghouse) must appear on the end user's bill, in addition to that of the clearinghouse agent.

(C) Obligations of the Clearinghouse Agent

(1) A clearing agent may act as a clearinghouse agent for certified ICs ***or COCOT Providers*** with respect to the provision of billing and collection for telecommunications services provided the following conditions are complied with:

(a) Prior to the provision of intrastate billing and collection service by the Company to a clearinghouse agent, the agent must provide to the Company the name, address, telephone number, and contact person for each IC ***or COCOT Provider*** on whose behalf the clearinghouse agent is receiving billing and collection services.

(b) Prior to the provision of intrastate billing and collection service by the Company to a clearinghouse agent, the clearinghouse agent must provide to the Company a copy of the intrastate certification for each IC ***or COCOT Provider*** on whose behalf the clearinghouse agent is receiving billing and collection services.

TARIFF BRANCH
RECEIVED
7/17/2006
PUBLIC SERVICE
COMMISSION
OF KENTUCKY

INTRASTATE ACCESS SERVICES TARIFF

8. Billing and Collection Service (Cont'd)

8.2 Billing Service (Cont'd)

8.2.5 Clearinghouse Agent Provisions (Cont'd)

(C) Obligations of the Clearinghouse Agent (Cont'd)

(1) (Cont'd)

(c) Prior to the provision of intrastate billing and collection services by the Company to a clearinghouse agent, the clearinghouse agent must provide to the Company a copy of its agency agreement with each IC ***or COCOT Provider*** on whose behalf the clearinghouse agent is receiving billing and collection services.

(d) Each message sent to the Company by the clearinghouse agent must be identified by the appropriate IC's ***or COCOT Provider's*** Carrier Identification Code (CIC); additionally, the clearinghouse agent must supply its own identifying CIC.

(e) In the event that a clearinghouse agent ceases to provide intrastate billing and collection services to an IC ***or COCOT Provider,*** the clearinghouse agent must inform the Company immediately.

(2) When a clearinghouse agent orders inquiry services, the clearinghouse agent must provide the Company with the telephone number of the IC so that the end user may directly contact the IC if that end user is not satisfied with the response of the Company, provided, however, that if the clearinghouse agent will provide the IC's number upon request of the end user, the inquiry will be routed by the Company to the clearinghouse agent for handling.

(3) When the clearinghouse agent does not order inquiry service from the Company, the telephone number of the IC must be stated on the end user's bill to enable the end user to directly contact the IC, provided, however, that if the clearinghouse agent will provide the telephone number of the IC upon request of the end user, the telephone number of the clearinghouse agent may appear on the bill instead of that of the IC.

(D) When a clearinghouse agent acts as an agent for certified ICs ***or COCOT Provider*** in the provision of billing and collection for telecommunication services, any nonrecoverable capital costs and expenses incurred by the Company will be provided under an Individual Case Basis arrangement.

TARIFF BRANCH
RECEIVED
7/17/2006
PUBLIC SERVICE
COMMISSION
OF KENTUCKY

INTRASTATE ACCESS SERVICES TARIFF

8. Billing and Collection Service (Cont'd)

8.3 Billing Analysis Service

At the request of an IC, the Telephone Company upon reasonable notice and with reasonable effort will provide Billing Analysis Service for detection, investigation and deterrence of billing evasion activities. The term "billing evasion activities" used herein denotes Message Billing Abuse and/or Network Abuse. Such abuse is the use of an access line (e.g., end user line or trunk, Pay Telephone Line or other access line or trunk provided by the Telephone Company) where there is intent to circumvent or evade the proper charges in whole or in part for use of telecommunications services over the access line, or to conceal the points of origin or termination of telecommunications services.

Such activities include bypass or circumvention of Telephone Company billing equipment, unauthorized use of Telephone Company and IC service offerings, and unauthorized use of Telephone Company facilities.

8.3.1 General Description

Billing Analysis Service is the provision of detection, investigation and deterrence of billing evasion activities.

Detection is the provision of equipment by the Telephone Company to identify and collect information on Network Abuse. Such equipment may be located in Telephone Company premises or offices or may be attached to access lines.

Investigation is the provision of investigative services to collect evidence to document that billing evasion activities are occurring, prepare reports, preserve evidence and supply expert witness analysis and testimony. Investigation also includes provision of services to coordinate the investigative activities between Exchange Telephone Companies and/or law enforcement agencies.

Deterrence is the contacting and interviewing of parties identified in billing evasion activities, the recovery of devices or materials used in billing evasion activities (where legally permitted), the service review for possible suspension of service over access lines identified in billing evasion activities and publicity assistance in publicizing billing evasion deterrence.

8.3.2 Undertaking of the Telephone Company

(A) When Billing Analysis Service is ordered under a Special Order by an authorized Security representative of the IC, the Telephone Company will provide any one or all of the services as set forth in (B) through (D) following at rates and charges as set forth in 17.5.4.

TARIFF BRANCH
RECEIVED
7/17/2006
PUBLIC SERVICE
COMMISSION
OF KENTUCKY

INTRASTATE ACCESS SERVICES TARIFF

8. Billing and Collection Service (Cont'd)

8.3 Billing Analysis Service (Cont'd)

8.3.2 Undertaking of the Telephone Company (Cont'd)

(B) Detection Service will be provided for Network Abuse at any central office switch equipped to recognize and record irregular key pulse and multi-frequency signals upon receipt of a Special Order from an IC specifying the central office(s) where detection service is requested. Subject to the agreement of the Telephone Company, special construction for the provision of central office equipment to recognize and record irregular key pulse and multifrequency signals may be undertaken at the request of the authorized Security representative of the IC to meet the needs of the IC. Such special construction will be provided as set forth in Exchange Carrier Association Tariff F.C.C. No. 3.

(1) Reports of detection service results will be provided on an office-by-office or line-by-line basis at the request of the authorized Security representative of the IC. On an office-by-office basis, a detection service report of any signal irregularities will be provided for the previous 60 days for all trunks equipped in the office (i.e. ESS control group). Alternatively, for an office requested by the IC, a line-by-line continuous scan for current signal irregularities will be provided. When the continuous line-by-line scan is provided, a weekly report of signal irregularities for the office involved will be furnished.

(2) The detection service reports as set forth in (1) preceding will include, for a signaling irregularity observed, the following (a) the calling NPA and telephone number (i.e., NXX-XXXX), (b) the called number (i.e., NPA and telephone number recorded by Telephone Company billing equipment) if available, (c) signaling irregularity data, (d) the holding time of the call, if available, and (e) the date of the call, if available. The report will be provided as a paper printout or microfiche at the discretion of the Telephone Company and sent to the authorized Security representative of the IC may pick up the report at a location designated by the Telephone Company. The 60-day report will be available for mailing or pickup 2 weeks after the end of the 60-day period. Results of the continuous scan will be provided to the authorized Security representative of the IC by a written report and/or a telephonic report within six working days after the end of a weekly scan.

TARIFF BRANCH
RECEIVED
7/17/2006
PUBLIC SERVICE
COMMISSION
OF KENTUCKY

INTRASTATE ACCESS SERVICES TARIFF

8. Billing and Collection Service (Cont'd)

8.3 Billing Analysis Service (Cont'd)

8.3.2 Undertaking of the Telephone Company (Cont'd)

(C) Investigative Service will be provided by authorized Telephone Company Security personnel upon receipt of a Special Order from an authorized Security representative of the IC specifying the line or lines or billing evasion activity (i.e., Message Billing Abuse and/or Network Abuse) to be investigated. The services provided include the provision of an identification report, collection of evidence, provision of a detection and documentation scan, preparation of an affidavit and prosecutive summary, preservation of evidence collected, assistance to law enforcement agencies, provision of expert witness analysis and/or testimony, the coordination of billing evasion investigative services and the review of an IC's billing evasion control programs.

(1) Provision of an identification report is the collection by Telephone Company personnel of billing information, party name, party address, service configuration, if any, and the preparation and submission of information pertinent to the IC's service in a report to the authorized Security representative of the IC for each line or billing evasion activity specified by the IC.

(2) Collection of evidence is the gathering of information pertinent to the line, message, or party associated with the billing evasion activity specified by the authorized Security representative of the IC of the results of such gathering efforts. The Telephone Company will determine the information provided in the written notification.

(3) Subject to the agreement of the Telephone Company, a detection and documentation scan on an individual line will be provided when an authorized Security representative of the IC provides a written request for such a scan. Provision of a detection and documentation scan on an individual line is the continuous scan of a line for irregular signals and when an irregular signal is recognized, the collection by Telephone Company equipment of information to show an irregular signal and use of the line occurred. Any information collected during the continuous scan of a line will be considered the property of the Telephone Company. The Telephone Company will notify the IC of the results of the scan and will permit authorized Security representatives of the IC to review the results. The scan and any associated information will not be provided to any person or entity until the Telephone Company is requested to do so by subpoena or lawful demand. Any out of pocket payments for travel and/or other expenses of Telephone Company personnel will be billed to the IC.

TARIFF BRANCH
RECEIVED
7/17/2006
PUBLIC SERVICE
COMMISSION
OF KENTUCKY

INTRASTATE ACCESS SERVICES TARIFF

8. Billing and Collection Service (Cont'd)

8.3 Billing Analysis Service (Cont'd)

8.3.2 Undertaking of the Telephone Company (Cont'd)

(C) (Cont'd)

(4) Preparation of an affidavit and prosecutive summary is the written documentation of the evidence collected by the Telephone Company personnel who performed such activities.

(5) Preservation of evidence is the placement of the collected evidence in a secure location under the control of Telephone Company Security personnel for a period of two years. Such preservation of evidence will be continued beyond two years by the Telephone Company when requested by appropriate law enforcement agencies or the authorized Security representative of the IC. The charges for Preservation of Evidence as set forth in 8.3.7 (B) following will apply.

(6) Assistance to law enforcement is the accompanying of duly authorized law enforcement personnel to a location where billing evasion activities have been determined to exist in order to identify billing evasion activity devices or materials. The Telephone Company personnel will provide such assistance to law enforcement personnel only after law enforcement involvement has been arranged by the IC, or under services as set forth in (10) following. If such assistance is required at locations outside the operating territory of the Telephone Company involved, any out of pocket payments of travel and/or other expenses of Telephone Company personnel will be billed to the IC, except to the extent that such expenses are paid by the judicial system.

(7) Provision of expert witness analysis is the review, study and other technical support activities provided by Telephone Company experts to analyze and/or document whether devices and materials associated with an investigation furnished by the authorized Security representative of the IC or under services as set forth in (10) following operate, perform or contain billing evasion activities. A written analysis report will be provided to the authorized Security representative of the IC. The expert will be selected by the Telephone Company.

(8) Provision of expert witness testimony is the preparation of testimony and the submission of such testimony in association with an investigation. A copy of the written testimony, if any, will be provided to the authorized Security representative of the IC. The expert witness will be selected by the Telephone Company. Any out of pocket payments for travel and/or other expenses of Telephone Company personnel will be billed to the IC.

TARIFF BRANCH
RECEIVED
7/17/2006
PUBLIC SERVICE
COMMISSION
OF KENTUCKY

8. Billing and Collection Service (Cont'd)

8.3 Billing Analysis Service (Cont'd)

8.3.2 Undertaking of the Telephone Company (Cont'd)

(C) (Cont'd)

(9) Coordination of billing evasion investigative services between telephone companies is the referral of investigative information to other telephone company Security personnel, provision of billing evasion information to other telephone company Security personnel, the collection of information from other telephone company Security personnel, and the tracking, collecting and reporting of the results of such investigations to the authorized Security representative of the IC.

(10) Coordination of billing evasion investigative activities of participating law enforcement agencies is the provision of billing evasion information to the law enforcement agencies, the collection of billing evasion information from the law enforcement agencies and the tracking, collecting and reporting of the results of such participation to the authorized Security representative of the IC. This coordination will be provided only upon receipt of written authorization from the authorized Security representative of the IC.

(11) Review of IC billing evasion deterrence control programs and related activities is advice to and/or training of IC personnel on billing evasion deterrence and preventive controls and the development of billing evasion deterrence and preventive control programs for the IC. The Telephone Company will, at the request of the IC, provide investigation service on a premium time basis. When investigation service is provided on such a basis, premium time charges as set forth in 8.3.7 (B) following apply.

(D) Deterrence services will be provided at any location in the operating territory of the Telephone Company that Telephone Company Security personnel can safely and legally enter. Deterrence services will be provided, at request of the authorized Security representative of the IC, by written or telephone notice. A telephone notice received from the authorized Security representative of the IC, must be followed by written confirmation within one day. Deterrence services will be provided only after an investigation service has been provided by the Telephone Company and billing evasion activity is found to warrant such actions. Deterrence service includes the contacting and interviewing of parties identified by the Telephone Company as being involved in billing evasion activities, the recovery of devices and/or materials associated with billing evasion activities, service review for possible suspension of Telephone Company service, and publicity assistance for publicizing billing evasion activity deterrence.

TARIFF BRANCH
RECEIVED
7/17/2006
PUBLIC SERVICE
COMMISSION
OF KENTUCKY

INTRASTATE ACCESS SERVICES TARIFF

8. Billing and Collection Service (Cont'd)

8.3 Billing Analysis Service (Cont'd)

8.3.2 Undertaking of the Telephone Company (Cont'd)

(D) (Cont'd)

(1) Contacting and interviewing of parties if the written or verbal notification to, or a face-to-face discussion with, a party or parties by Telephone Company Security personnel in order to deter further billing evasion activities. Contacting and interviewing is provided at locations identified by law enforcement agencies, the IC or the Telephone Company.

(2) Recovery of devices or materials is the attempt by Telephone Company Security personnel to recover devices or materials which are used in association with Telephone Company facilities in billing evasion activities. Such recovery is provided at locations identified by the Telephone Company, law enforcement agencies or the IC.

(3) Service Review for possible suspension of Telephone Company service is the request for authority to suspend service from appropriate Telephone Company officers, notification to the end user that service will be suspended and, after review of the end user response, or lack thereof, suspension of service, if warranted, in the Telephone Company's judgment.

(4) Publicity assistance for publicizing billing evasion activity deterrence is the provision of information and personnel to aid in publicizing billing evasion activity deterrence. The Telephone Company will determine what information it will provide , if any, and will select the personnel and media, if any, to provide this service.

8.3.3 Liability of the Telephone Company

Notwithstanding 2.1.3 preceding, in the absence of willful misconduct, no liability for damages to the customer or other person or entity shall attach to the Telephone Company for its action or the conduct of its employees in providing Billing Analysis Service.

TARIFF BRANCH
RECEIVED
7/17/2006
PUBLIC SERVICE
COMMISSION
OF KENTUCKY

INTRASTATE ACCESS SERVICES TARIFF

8. Billing and Collection Service (Cont'd)

8.3 Billing Analysis Service (Cont'd)

8.3.4 Obligations of the IC

(A) The authorized Security representative of the customer shall order all Billing Analysis Service under a Special Order. The authorized Security representative of the customer shall order those Billing Analysis Services it wishes to receive.

(B) With each order, the IC shall designate and identify its authorized Security representative who will be responsible to protect the information to whom the Billing Analysis Service information will be provided. The IC shall assure and take every effort to make sure the Billing Analysis Service information is provided to and used only by authorized personnel involved in billing evasion activity matters.

(C) When Billing Analysis Service Investigation is ordered, the authorized Security representative of the IC shall furnish all known details of the billing evasion activities, including the access lines, parties or messages to be investigated, and shall furnish all necessary end user information it possesses to the Telephone Company Security personnel. The specification of the access line, party or message to be investigated shall be in writing by the authorized Security representative of the IC.

(D) When law enforcement agencies are to be brought into the investigation, the authorized Security representative of the IC shall secure their participation or authorize the Telephone Company in writing to obtain and coordinate such law enforcement agency participation.

(E) When evidence collected by the Telephone Company is to be produced in connection with a judicial proceeding, the IC shall notify the Telephone Company of such a requirement in a timely manner.

(F) When the IC requests that service be suspended for unauthorized use, the IC shall furnish a written request authorized by an officer of the IC. The request shall state the reason for the request and tariff, contract or legal provision permitting such suspension and shall correctly identify the end user, telephone number and the location of the end user service to be suspended.

(G) All inquiries from the IC's end users concerning services provided under this tariff are to be handled by the IC. Any questions to the Telephone Company shall be made by the authorized Security representative of the IC.

(H) Except as set forth in 8.3.2(D)(4) preceding, publicizing of actions resulting from services provided under this tariff shall be the responsibility of the IC. The IC shall not publicize that the Telephone Company assisted the IC unless the IC has written permission to do so from the Telephone Company.

TARIFF BRANCH
RECEIVED
7/17/2006
PUBLIC SERVICE
COMMISSION
OF KENTUCKY

INTRASTATE ACCESS SERVICES TARIFF

8. Billing and Collection Service (Cont'd)

8.3 Billing Analysis Service (Cont'd)

8.3.4 Obligations of the IC (Cont'd)

(I) When the authorized Security representative of the IC orders detection service or a detection and documentation scan of an individual line, it shall specify in writing the offices, lines or parties to be included in the scanning and reports the Telephone Company will provide.

(J) When provision of expert witness analysis is ordered by the IC, the IC shall be responsible for furnishing the evidence to be analyzed unless the services as set forth in 8.3.2(C)(10) preceding are ordered by the IC.

(K) When provision of expert witness testimony is ordered by the IC, the IC shall include the name, if any, of the Telephone Company expert it desires and when and where the testimony is needed.

8.3.5 Payment Arrangements

(A) Minimum Periods

The minimum period for which Billing Analysis detection service continuous scanning is provided and for which charges apply is one week.

(B) Cancellation of a Special Order

An IC may cancel a Special Order for Billing Analysis Service on any date prior to the service date. The cancellation date is the date the Telephone Company receives written or verbal notice from the authorized security representative of the IC that the Special Order is to be cancelled. The verbal notice must be followed by written confirmation within 10 days. The service date for Billing Analysis Service is the date the Telephone Company Security organization receives the Special Order.

When an IC cancels a Special Order for Billing Analysis Service after the order date but prior to the start of service, a charge as listed following shall apply.

(1) For detection service, the per report charge for each 60-day report ordered and the per week charge for each office where a continuous scan is ordered.

(2) For investigative service, two times the appropriate hourly charge for the service ordered and the per occurrence charge for each documentation scan ordered.

(3) For deterrence service two times the contact and interview of parties hourly charge for the service ordered.

TARIFF BRANCH
RECEIVED
7/17/2006
PUBLIC SERVICE
COMMISSION
OF KENTUCKY

INTRASTATE ACCESS SERVICES TARIFF

8. Billing and Collection Service (Cont'd)

8.3 Billing Analysis Service (Cont'd)

8.3.5 Payment Arrangements (Cont'd)

(C) Changes to Special Orders

IC requested changes to a pending Special Order for Billing Analysis Service will be undertaken if they can be accommodated by the Telephone Company. However, all changes to pending Special Orders for detection service will be considered as a discontinuance of the pending order and the placement of a new order and appropriate charges will apply. Any additional time required on the part of the Telephone Company personnel will be billed to the IC at the appropriate hourly charges.

8.3.6 Rate Regulations

(A) The charge per report for the 60 day report, as set forth in 8.3.7(A) following, applies for each report provided to an IC even though no signaling irregularities are found.

(B) The charge per office per week for continuous scan as set forth in 8.3.7(A) following applies for each week of service even though no signaling irregularities are found.

(C) The per hour rate for investigative service and/or deterrence service is for the use of one hour of one Telephone Company Security person's time.

(D) The Telephone Company will keep a count of the hours and fraction thereof used by Telephone Company personnel to provide the service the IC ordered and will bill the IC in accordance with these records. The hours for each service ordered will be summed and then rounded to the nearest hour, except that when the total is less than one hour, one hour will be used to determine the charges.

(E) Premium time is all hours for work performed outside the Telephone Company's normal work schedule and/or which requires additions to the work force.

(F) The Provision of Billing Analysis Service per Special Order charge applies for each Special Order accepted by the Telephone Company for any Billing Analysis Service.

TARIFF BRANCH
RECEIVED
7/17/2006
PUBLIC SERVICE
COMMISSION
OF KENTUCKY

INTRASTATE ACCESS SERVICES TARIFF

8. Billing and Collection Service (Cont'd)

8.4 Billing Information Service

At the request of the customer, the Telephone Company will provide information to the customer from its end user records, billing files and account data base.

8.4.1 General Description

Billing Information Service is the provision of information to the customer from Telephone Company record systems labeled as Customer Records Information System (CRIS), Non-Sent-Paid Indicator Data Base (DBAS) and Customer Name and Address Bureau (CNA). Such Billing Information Service will be limited to the provision of information to a customer relating exclusively to end user services provided by that customer. Information relating to services provided by any other entity will not be provided.

Information is defined as any entry in the records, data base or bureau listings which is not listed as proprietary to the Telephone Company. Any entry listed as proprietary to the Telephone Company will not be provided.

8.4.2 Undertaking of the Telephone Company

(A) When Billing Information Service is ordered by the customer, the Telephone Company will provide information on a request by request basis as follows in (B) through (M) following at the rates and charges as set forth in 17.5.5.

(B) Upon request from a customer and when the customer has ordered Message Billing Service Bill Processing Service, the Telephone Company will provide information from its CRIS records as follows:

(1) message detail for a message end user
(2) account detail for a message end user
(3) service and equipment detail for a message end user.

Message detail is message-billed records in exchange message record (EMR) format in the CRIS file.

Account detail is data that furnishes the end user name, billing address and billing parameters other than message detail and/or service and equipment detail.

Service and equipment detail is data associated with the customer's rate elements.

A message end user is an account with customer message or bulk-billed detail (for a bill period) or an account which is marked, as set forth in (F) following, or established as an end user of the customer's message or bulk-billed services.

TARIFF BRANCH
RECEIVED
7/17/2006
PUBLIC SERVICE
COMMISSION
OF KENTUCKY

INTRASTATE ACCESS SERVICES TARIFF

8. Billing and Collection Service (Cont'd)

8.4 Billing Information Service (Cont'd)

8.4.2 Undertaking of the Telephone Company (Cont'd)

(B) (Cont'd)

Message detail, account detail and/or service and equipment detail which is confidential due to legal, national security, end user or other appropriate requirements will not be provided. If the customer requires this information in order to bill its services, it shall secure written permission from the end user to obtain the information from the Telephone Company. The customer shall furnish the Telephone Company the end user's written permission for the information to be released.

(C) Upon request from a customer and when the customer has ordered Private Line Billing Service, the Telephone Company will provide information from its CRIS records as follows:

(1) account detail for a private line end user
(2) service and equipment detail for a private line end user.

Account detail is data that furnishes the end user name, billing address and billing parameters other than message detail and/or service and equipment detail.

Service and equipment detail is data associated with the customer's rate elements.

A private line end user is an account with rate element detail (for a bill period) or an account which is established, at customer request, as an end user of the customer's private line (non-message) services.

Account detail and/or service and equipment detail which is confidential due to legal, national security, end user or other appropriate requirements will not be provided. If the customer requires this information in order to bill its services, it shall secure written permission from the end user to obtain the information from the Telephone Company. The customer shall furnish the Telephone Company the end user's written permission for the information to be released.

(D) Upon request from an authorized supervisor of the customer for end user information when automatic number identification (ANI) service is provided to the customer by the Telephone Company or when the customer offers a telecommunications service for which the billing is based on authorized calling or called parties, the Telephone Company will provide information from its DBAS records. Only current information which resides in the data base will be provided.

TARIFF BRANCH
RECEIVED
7/17/2006
PUBLIC SERVICE
COMMISSION
OF KENTUCKY

INTRASTATE ACCESS SERVICES TARIFF

8. Billing and Collection Service (Cont'd)

8.4 Billing Information Service (Cont'd)

8.4.2 Undertaking of the Telephone Company (Cont'd)

(E) Where Telephone Company facilities are available and subject to the agreement of the Telephone Company, CRIS and/or DBAS information may be provided on an interrogation basis at the request of the customer.

The interrogation basis will permit the customer to access a data file which contains the data base information from a data processing terminal at a location designated by the customer, furnish an end user telephone number and, after verification that the information is authorized for the customer's use, receive the end user information. The interrogation file will be provided during normal Telephone Company business hours. The DBAS interrogation file will be updated each business day to reflect current end user information. The CRIS interrogation file will be updated each bill day (day bills are prepared and dated for an end user for a customer's service) and will be updated daily when information is available and when the Telephone Company updates the file on a daily basis to reflect current end user information.

The Telephone Company will develop the customer's CRIS and DBAS information order into a retrieval and interrogation program.

Program development charges, as set forth in 8.4.7 following, apply for the hours required to design, develop, test and maintain the necessary programs.

(F) CRIS and/or DBAS information will be provided on a total file and/or file update basis as follows:

(1) The total file basis will permit the customer to receive, at the customer's option, all the end user information that is authorized for the customer's use on paper printout, magnetic tape or fiche. The total file output will contain end user information for the current billing period. The billing period will be set by the Telephone Company. The magnetic tapes will be provided without the return of previously supplied tapes. The Telephone Company will supply the magnetic tapes. After the information system ordered by the customer is in service, the paper printout, magnetic tape or fiche will be available from the Telephone Company within 10 working days of the customer request.

Program development charges as set forth in 8.4.7 following, apply for the hours required to design, develop, test and maintain the necessary programs that are used to provide the paper output, magnetic tape or fiche.

TARIFF BRANCH
RECEIVED
7/17/2006
PUBLIC SERVICE
COMMISSION
OF KENTUCKY

8. Billing and Collection Service (Cont'd)

8.4 Billing Information Service (Cont'd)

8.4.2 Undertaking of the Telephone Company (Cont'd)

(F) (Cont'd)

(1) (Cont'd)

Once available, the paper printout magnetic tape or fiche will be sent to the customer via first class U.S. Mail service. At the option of the customer, the customer may pick up the paper printout, magnetic tape or fiche at a location designated by the Telephone Company or request the information be data-transmitted to the customer, the data transmission charges will be determined on an individual case basis.

(2) The file update basis will permit the customer to receive, at the customer option, all the end user information that is authorized for the customer's use on paper printout, fiche or magnetic tape. The file update output will contain end user information for the current billing period only. The current billing period is the period associated with the most recent bill rendered to an end user. The magnetic tapes will be provided without the return of previously supplied tapes. The Telephone Company will supply magnetic tapes. The file updates will include those records added and those records deleted, if any (deleted records may not be retained by all of the Telephone Companies). For CRIS information, the file updates will be provided on a monthly interval. For DBAS information, the file updates will be provided for each business day.

Program development charges as set forth in 8.4.7 following, apply for the hours required to design, develop, test and maintain the necessary programs that are used to provide the paper output, fiche or magnetic tape.

Once available, the file update paper printout, fiche or magnetic tape will be sent to the customer via first call U.S. Mail service. At the option of the customer, the customer may pick up the paper output, fiche or magnetic tape at a location designated by the Telephone Company or request the information be data-transmitted to the customer. When the information is data-transmitted to the customer, the data transmission charges will be determined on an individual case basis.

TARIFF BRANCH
RECEIVED
7/17/2006
PUBLIC SERVICE
COMMISSION
OF KENTUCKY

INTRASTATE ACCESS SERVICES TARIFF

8. Billing and Collection Service (Cont'd)

8.4 Billing Information Service (Cont'd)

8.4.2 Undertaking of the Telephone Company (Cont'd)

(F) (Cont'd)

(3) The total file output and the file update output will, at the option of the customer, be provided on a quick turnaround basis. Such quick turnaround output will be provided one working day after the information that the customer ordered is available. Once available, the output will be provided on paper printout, fiche, or magnetic tape and will be sent to the customer via first class U.S. Mail service. At the option of the customer, the customer may pick up the paper output, fiche or magnetic tape at a location designated by the Telephone Company or request the information be data-transmitted to the customer. When the information is data-transmitted to the customer, the data transmission charges will be determined on an individual case basis.

(G) The Telephone Company will, at the request of the customer, mark any message-billed message end user account, other than end user accounts with customer credit cards or rate elements, as a user of the customer's message services. After marking is ordered, the end user account will be marked as a customer end user account at the time the first message is posted to the end user account. If not marked at the request of the customer, such an end user account will not be identified as a customer account unless there are customer message details associated with the account for the bill period for which message detail is ordered by the customer. The mark will be removed at the request of the customer. Charges to mark the account and maintain the mark in future months as set forth in 17.5.5 apply. Customer bulk-billed end user accounts and message end user accounts with customer credit cards or customer rate elements are counted as customer accounts.

(H) Upon acceptance by the Telephone Company of a Special Order for Billing Information Service from a customer, the Telephone Company will determine the period of time to implement such service on an individual order basis.

(I) The Telephone Company will provide the format for interrogation of its data files and the format of any printed, magnetic tape or fiche output from its CRIS and DBAS files.

TARIFF BRANCH
RECEIVED
7/17/2006
PUBLIC SERVICE
COMMISSION
OF KENTUCKY

8. Billing and Collection Service (Cont'd)

8.4 Billing Information Service (Cont'd)

8.4.2 Undertaking of the Telephone Company (Cont'd)

(J) Upon request from an authorized supervisor of the customer who furnishes the account code assigned by the Telephone Company, the Telephone Company will provide name and town information from its CNA bureau. The CNA name and town data, but not street address will be provided only when the customer needs the information to authorize a call, to bill a call, or to handle an emergency situation. The information will be provided on a request by request basis by voice telecommunications. Name, town and state will be provided for a telephone number. A request includes the handling of one call and providing the data for one telephone number. The Telephone Company will specify the location where requests are to be received and the format in which the request is to be made.

If the name and address associated with the telephone number is restricted due to the request of the end user, legal authority or law enforcement agency, no name or town location will be provided.

At the request of the customer, written confirmation of the name and town location will be sent to the authorized supervisor making the request by first class U.S. Mail service.

(K) If the customer requests the information ordered by the customer be resupplied by the Telephone Company because of incorrect customer specifications or errors, the Telephone Company will resupply the information in accordance with a new customer order and all appropriate charges as set forth in 8.4.7 following will apply.

(L) Where facilities are available and subject to the agreement of the Telephone Company, updating of customer data bases or files from Telephone Company data processing terminals or equipment in Telephone Company locations may be undertaken at the request of the customer. The charges for such a service will be determined on an individual case basis.

(M) The Telephone Company will provide Billing Information Service under a Special Order. For all Billing Information Services, the Billing Information Service Special Order charge as set forth in 8.4.7(I) following applies.

8.4.3 Liability of the Telephone Company

Notwithstanding 2.1.3 preceding, in the absence of willful misconduct, no liability for damages to the customer or other person or entity shall attach to the Telephone Company for its action or the conduct of its employees in providing Billing Information Service.

TARIFF BRANCH
RECEIVED
7/17/2006
PUBLIC SERVICE
COMMISSION
OF KENTUCKY

8. Billing and Collection Service (Cont'd)

8.4 Billing Information Service (Cont'd)

8.4.4 Obligations of the Customer

(A) The customer shall order Billing Information Service under a Special Order. The customer shall order those Billing Information Services for the states where it wishes to receive the services and shall specify how often it wishes the service to be provided.

(B) With each order, the customer shall identify the authorized individual and address to receive the Billing Information Service output. When interrogation is ordered, the customer shall identify the data processing terminals authorized to receive the information and the authorized individual who will be responsible for all terminal activities. When CNA service is ordered, the customer will identify in writing and include the account codes assigned by the Telephone Company of all authorized individuals who will contact the CNA bureau.

(C) The customer shall take every effort to make sure that Billing Information Service output and interrogation capability is provided only to authorized personnel. The customer shall agree, in writing to the Telephone Company, that the customer will not provide the Billing Information Service outputs to third parties for any use by such third parties except for work for the customer and which is under complete control of the customer.

(D) The customer shall furnish, to the Telephone Company, when interrogation service is ordered all information necessary to allow the Telephone Company to establish an interrogation program. In addition, the customer shall furnish the Telephone Company, for each data base and file where the interrogation is ordered, an estimate of the number of requests per business day that the Telephone Company data bases and file will be asked to handle. The customer's terminals used to interrogate the Telephone Company data bases and files must be capable of working with Telephone Company equipment and software.

(E) The customer shall be responsible for all contacts and inquiries from its end users concerning Billing Information Service.

(F) The customer shall not publicize or represent to others that the Telephone Company jointly participates with the customer in the development of the customer's end user records, accounts, data bases or market data, records, files and data bases or other systems it assembles through the use of Billing Information Service.

(G) When the customer wants a quotation of the charges for the service ordered, the customer shall request such at the time of the order. Quotation regulations as set forth in 2.1.12 preceding apply.

TARIFF BRANCH
RECEIVED
7/17/2006
PUBLIC SERVICE
COMMISSION
OF KENTUCKY

8. Billing and Collection Service (Cont'd)

8.4 Billing Information Service (Cont'd)

8.4.4 Obligations of the Customer (Cont'd)

(H) When the customer orders marking of non customer credit card message-billed message end user accounts, all accounts containing that customer's messages will be marked starting with the next bill period and marking will continue until the customer orders marking discontinued. The customer shall, when it orders marking removed, furnish the telephone number of each end user account for which the mark is to be removed. The mark will be removed prior to the next bill period.

8.4.5 Payment Arrangements

(A) Minimum Periods and Minimum Monthly Charges

The minimum period for which Billing Information Service CRIS and/or DBAS file interrogation is provided and for which charges apply is one year.

The minimum monthly charges for CRIS and/or DBAS file interrogation are the charges for the total number of requests per business day furnished by the customer as set forth in 8.4.4.(D) preceding times 18 (i.e., 20 business days per month times 0.9).

When the customer discontinues the service prior to the end of the one-year minimum period, the minimum monthly charge for the data base interrogation will apply for each remaining month and fraction of month.

(B) Cancellation of a Special Order

A customer may cancel a Special Order for Billing Information Service on any date prior to the service date. The cancellation date is the date the Telephone Company receives written or verbal notice from the customer that the Special Order is to be cancelled. The verbal notice must be followed by written confirmation within 10 days. The service date for a Billing Information Service is the date the Telephone Company notifies the customer that the Telephone Company is ready to provide Billing Information Service reports or receive interrogation requests. When a customer cancels a Special Order for Billing Information Service after the order date but prior to the start of service, charges as listed following shall apply:

(1) For any service, the appropriate per hour rate for all hours expended by the Telephone Company to provide the service.

(2) For any service, any expense for equipment obtained for the service where such equipment cannot be reused within six months.

TARIFF BRANCH
RECEIVED
7/17/2006
PUBLIC SERVICE
COMMISSION
OF KENTUCKY

INTRASTATE ACCESS SERVICES TARIFF

8. Billing and Collection Service (Cont'd)

8.4 Billing Information Service (Cont'd)

8.4.5 Payment Arrangements (Cont'd)

(C) Changes to Special Orders

When a customer requests changes for a pending Special Order for Billing Information Service, they will be undertaken if they can be accommodated by Telephone Company. Any additional time required on the part of Telephone Company personnel will be billed to the customer at the appropriate hourly charges.

8.4.6 Rate Regulations

(A) The number and type of records for which charges apply as set forth in 8.4.7 following will be accumulated by the Telephone Company and the Telephone Company will bill the customer in accordance with these accumulations. A record is a logical grouping of information as described in the programs that process the information, print the paper output, and load the magnetic tape or data file used to supply the detail which is data-transmitted or put on fiche. For each service and type of output ordered, the number of records processed by the Telephone Company to prepare the output will be used to determine the charges. The number of records processes will be determined using the number of records input to or the number of records output from the programs that process the information, print the paper output and load the magnetic tape or data file, whichever number of records in higher.

(B) The number of hours and fraction thereof for which charges apply as set forth in 8.4.7 following will be accumulated by the Telephone Company. The per hour rate is for the use of one hour of one Telephone Company programmer. The Telephone Company will bill the customer for hourly charges in accordance with these accumulations. The accumulated hours for each order will be summed and rounded to the nearest hour, except that when the total is less than one hour, one hour will be used to determine the charges.

(C) When a CNA request is received, the Telephone Company will keep a count of the requests. The Telephone Company will bill the customer in accordance with these records even though the Telephone Company was not able to provide a name and town location for all requests.

(D) When records are entered on a data file or magnetic tape in order to provide information to a customer, the per tape charge applies for each data file or tape prepared. In addition, the per record charge applies for each record entered on the data file or tape. The Telephone Company will determine the charges based on the number of data files or tapes prepared and on its count of the records entered on the data file or tape.

TARIFF BRANCH
RECEIVED
7/17/2006
PUBLIC SERVICE
COMMISSION
OF KENTUCKY

INTRASTATE ACCESS SERVICES TARIFF

8. Billing and Collection Service (Cont'd)

8.4 Billing Information Service (Cont'd)

8.4.6 Rate Regulations (Cont'd)

(E) When marking of message end user accounts is ordered, the marking charge applies for each end user account marked. Once an account is marked, for maintenance of mark charge applies for each month following the month the account is marked until the customer requests the mark be removed. No charges apply to remove the mark.

(F) The Provision of Billing Information Service per Special Order Charge applies for each Special Order accepted by the Telephone Company for any Billing Information Service.

8.5 Rates

See Section 17.5 for all Billing and Collection rates.

TARIFF BRANCH
RECEIVED
7/17/2006
PUBLIC SERVICE
COMMISSION
OF KENTUCKY

9. Reserved

This section is reserved for future use.

TARIFF BRANCH
RECEIVED
7/17/2006
PUBLIC SERVICE
COMMISSION
OF KENTUCKY

INTRASTATE ACCESS SERVICES TARIFF

10. Special Federal Government Access Services

10.1 General

This section covers Special Access Services that are provided to a customer for use only by agencies or branches of the Federal Government and other users authorized by the Federal Government. Services provided to state emergency operations centers are included. These services provide for command and control communications, including communications for national security, emergency preparedness and presidential requirements. They are required to assure continuity of Government in emergency and crisis situations and to provide for national security.

Services for command and control communications and for national security and emergency preparedness sometimes require short notice and short duration service provisions. These provisions are especially needed to meet presidential requirements or in response to natural, man-made, or declared emergencies. Requirements of this type cannot be forecasted and are usually needed for a relatively short period. The provision of service under these conditions may require the availability of facilities, such as portable microwave equipment, which are provided on a temporary basis by the Telephone Company or customer.

10.2 Emergency Conditions

These services will be provided on the date requested or as soon as possible thereafter when the emergency falls into one of the following categories:

- State of crisis declared by the National Command Authorities (includes commitments made to the National Communications System in the "National Plan for Emergencies and Major Disasters").

- Efforts to protect endangered U.S. personnel or property both in the U.S. and abroad. (Includes space vehicle recovery and protection efforts.)

- Communications requirements resulting from hostile action, a major disaster or a major civil disturbance.

- The Director (Cabinet level) of a Federal department, Commander of a Unified/Specified Command, or head of a military department has certified that a communications requirement is so critical to the protection of life and property or to the National Defense that it must be processed immediately.

- Political unrest in foreign countries which affect the national interest.

- Presidential service.

TARIFF BRANCH
RECEIVED
7/17/2006
PUBLIC SERVICE
COMMISSION
OF KENTUCKY

INTRASTATE ACCESS SERVICES TARIFF

10. Special Federal Government Access Services (Cont'd)

10.3 Facility Availability

In order to insure communications during periods of emergency, the Telephone Company will, within the limits of good management, make available the necessary facilities to restore service in the event of damage or to provide temporary emergency service.

In order to meet the requirements of agencies or branches of the Federal Government, the Telephone Company may utilize government-owned facilities, when necessary to provide service.

10.4 Federal Government Regulations

In accordance with Federal Government Regulations, all service provided to the Federal Government will be billed in arrears. However, this provision does not apply to other customers that obtain services under the provisions of this tariff to provide their services to the Federal Government.

TARIFF BRANCH
RECEIVED
7/17/2006
PUBLIC SERVICE
COMMISSION
OF KENTUCKY

INTRASTATE ACCESS SERVICES TARIFF

10. Special Federal Government Access Services (Cont'd)

10.5 Service Offerings to the Federal Government

The following unique services are provided to a customer for use only by agencies or branches of the Federal Government, other authorized users and state emergency operations centers. The rates and charges for these services shall be developed on an individual case basis and shall be consistent with the rates and charges for services offered in other sections of this tariff.

10.5.1 Type and Description

(A) Voice Grade Special Access Services

(1) Voice Grade Secure Communications Type I

Approximate bandwidth of 10-50,000 Hz. Furnished for two-point secure communications on two-wire or four-wire metallic facilities between a customer designated premises and an end user's premises. Services are conditioned as follows:

T-3 Conditioning - The absolute loss (referenced to 1 milliwatt) with respect to frequency shall not exceed:

15 dB at 10 Hz
13 dB at 100 Hz
9 dB at 1,000 Hz
20 dB at 10,000 Hz
30 dB at 50,000 Hz

Additional conditioning (available in one or two directions on four-wire facilities only) to provide the following characteristics:

The absolute loss (referenced to one milliwatt) with respect to frequency shall not exceed:

0 dB at 1,000 Hz
± 1 dB between 1,000 Hz and 40,000 Hz
± 2 dB between 10 Hz and 50,000 Hz
(+ means more loss)

The net loss of the conditioned service (with or without additional conditioning) shall not vary by more than four dB at 1,000 Hz from the levels specified preceding. Voice frequency signaling or supervisory tones can be transmitted.

TARIFF BRANCH
RECEIVED
7/17/2006
PUBLIC SERVICE
COMMISSION
OF KENTUCKY

INTRASTATE ACCESS SERVICES TARIFF

10. Special Federal Government Access Services (Cont'd)

10.5 Service Offerings to the Federal Government (Cont'd)

10.5.1 Type and Description (Cont'd)

(A) Voice Grade Special Access Services (Cont'd)

(2) Voice Grade Secure Communications Type II

Approximate bandwidth 10-50,000 Hz. Furnished on four-wire metallic facilities for duplex operation for two-point secure communications between a customer designated premises and an end user's premises. Services are conditioned as follows:

G-1 Conditioning - The absolute loss with respect to frequency and the net loss variation shall be the same as Voice Grade Secure Communications Type I services without additional conditioning. Voice frequency signaling or supervisory tones can be transmitted.

(3) Voice Grade Secure Communications Type III

Approximate bandwidth 10-50,000 Hz. Furnished on four-wire metallic facilities for duplex operation for two-point secure communications between a customer designated premises and an end user's premises. Services are conditioned as follows:

G-2 Conditioning - The absolute loss with respect to frequency and the net loss variation from the customer designated premises to the end user's premises shall be the same as Voice Grade Secure Communications Type I services without additional conditioning; from the end user's premises to the customer designated premises shall be the same as Voice Grade Secure Communications Type I services with additional conditioning. Voice frequency signaling or supervisory tones can be transmitted.

(4) Voice Grade Secure Communications Type IV

Approximate bandwidth 10-50,000 Hz. Furnished on four-wire metallic facilities for duplex operation for two-point secure communication between two customer designated premises. Services are conditioned as follows:

G-3 Conditioning - The absolute loss with respect to frequency and the net loss variation shall be the same in both directions of transmission as Voice Grade Secure Communications Type I services with additional conditioning. Voice frequency signaling or supervisory tones can be transmitted.

TARIFF BRANCH
RECEIVED
7/17/2006
PUBLIC SERVICE
COMMISSION
OF KENTUCKY

INTRASTATE ACCESS SERVICES TARIFF

10. Special Federal Government Access Services (Cont'd)

10.5 Service Offerings to the Federal Government (Cont'd)

10.5.1 Type and Description (Cont'd)

(B) Wideband Digital Special Access Service

Service arrangements for secured communications to accommodate the transmission of binary digital baseband signals in a random polar format.

(1) Wideband Secure Communications Type I

For transmission at the rate of 18,750 bits per second.

(2) Wideband Secure Communications Type II

For transmission at the rate of 50,000 bits per second.

(3) Wideband Secure Communications Type III

To accommodate the transmission of restored polar two-level facsimile signals with a minimum signal element width of twenty micro-seconds at a rate of 50,000 bits per second.

To accommodate the transmission of binary digital baseband signals in a random polar format at the rate of 50,000 bits per second.

10.5.2 Mileage Application

Mileage, when used for rate application between the serving wire centers of two customer designated premises, shall be determined by the V and H Coordinates Method as set forth in NATIONAL EXCHANGE CARRIER ASSOCIATION, INC., TARIFF F.C.C. No. 4 and administered as set forth in 7.2.5 preceding.

TARIFF BRANCH
RECEIVED
7/17/2006
PUBLIC SERVICE
COMMISSION
OF KENTUCKY

INTRASTATE ACCESS SERVICES TARIFF

10. Special Federal Government Access Services (Cont'd)

10.6 Rates and Charges

10.6.1 General

The rates and charges for special offerings to the Federal Government, such as set forth in 10.5 preceding, are developed on an individual cases basis and are set forth in 17.4.5 following.

10.6.2 Voice Grade Special Access

The provision of T-3 and G conditioned services contemplates station and tandem switching operations, using customer provided equipment, as well as Special Access Service. Separate narrowband or voice grade services, where required by the customer provided equipment or switching operation, are furnished in accordance with the applicable sections of this tariff.

10.6.3 Move Charges

(A) When a service without a termination charge associated with that service, as set forth in 17.4.5 following, is moved to a different building, the nonrecurring charge applies; when moved to a new location in the same building, a charge of one-half of the nonrecurring charge applies.

(B) When service with a termination charge associated with that service, as set forth in 17.4.5 following, is moved and reinstalled at a new location, the customer may elect:

- to pay the unexpired portion of the termination charge for the service, if any, with the application of a nonrecurring charge and the establishment of a new termination charge for such service at the new location, or

- to continue service subject to the unexpired portion of the termination charge, if any, and pay the estimated costs of moving such service, provided that the customer requests these charges be quoted prior to ordering the service move. Charges for moving such service will be based on estimated costs attributable to the move.

Move charges include the estimated costs of removal, restoration of services or facilities necessitated by the move, transportation, storage, reinstallation, engineering, labor, supervision, materials, administration, and any other specific items of cost directly attributable to the move.

TARIFF BRANCH
RECEIVED
7/17/2006
PUBLIC SERVICE
COMMISSION
OF KENTUCKY

INTRASTATE ACCESS SERVICES TARIFF

11. Special Facilities Routing of Access Services

11.1 Description

The services provided under this tariff are provided over such routes and facilities as the Telephone Company may elect. Special Facilities Routing is involved when, in order to comply with requirements specified by the customer, the Telephone Company provides Switched Access Service, Special Access Service or Special Federal Government Access Service in a manner which includes one or more of the following conditions:

11.1.1 Diversity

Two or more circuits must be provided over not more than two different physical routes.

11.1.2 Avoidance

A circuit(s) must be provided on a route which avoids specified geographical locations.

11.1.3 Diversity and Avoidance Combined

11.1.4 Cable-Only Facilities

Certain Voice Grade services are provided on Cable-Only Facilities to meet the particular needs of a customer.

Service is provided subject to the availability of Cable-Only facilities. In the event of service failure, restoration will be made through the use of any available facilities as selected by the Telephone Company.

Avoidance and Diversity are available on Switched Access Service as set forth in Section 6. preceding; Metallic, Telegraph Grade and Voice Grade Special Access Services as set forth respectively in 7.4, 7.5 and 7.6 preceding and Special Federal Government Access Services as set forth in 10.5 preceding. Cable-Only Facilities are available for Switched Access Service as set forth in Section 6. preceding; Voice Grade Special Access Services as set forth in 7.6 preceding and Special Federal Government Access Services as set forth in 10.5 preceding.

In order to avoid the compromise of special routing information, the Telephone Company will provide the required routing information for each specially routed service to only the ordering customer. If requested by the customer, this information will be provided when service is installed and prior to any subsequent changes in routing.

The rates and charges for Special Facilities Routing of Access Services are developed on an individual case basis. Such rates and charges for Special Facilities Routing of Access Services are as set forth in 17.4.6 following and are in addition to all other rates and charges that may be applicable for services provided under other sections of this tariff.

TARIFF BRANCH
RECEIVED
7/17/2006
PUBLIC SERVICE
COMMISSION
OF KENTUCKY

INTRASTATE ACCESS SERVICES TARIFF

12. Specialized Service or Arrangements

12.1 General

Specialized Service or Arrangements may be provided by the Telephone Company, at the request of a customer, on an individual case basis if such service or arrangements meet the following criteria:

- The requested service or arrangements are not offered under other sections of this tariff.
- The facilities utilized to provide the requested service or arrangements are of a type normally used by the Telephone Company in furnishing its other services.
- The requested service or arrangements are provided within a LATA.
- The requested service or arrangements are compatible with other Telephone Company services, facilities, and its engineering and maintenance practices.
- This offering is subject to the availability of the necessary Telephone Company personnel and capital resources.

Rates and charges and additional regulations if applicable, for Specialized Service or Arrangements are provided on an individual case basis and are as set forth in 17.4.7 following.

TARIFF BRANCH
RECEIVED
7/17/2006
PUBLIC SERVICE
COMMISSION
OF KENTUCKY

13. Additional Engineering, Additional Labor and Miscellaneous Services

13.1 addresses Additional Engineering. 13.2 addresses Additional Labor (which is comprised of Overtime Installation, Overtime Repair, Standby, Testing and Maintenance with Other Telephone Companies, and Other Labor). 13.3 addresses Miscellaneous Services (which are comprised of Testing Services, Maintenance of Service and Telecommunications Service Priority). 13.4 addresses Presubscription.

In this section, normally scheduled working hours are an employee's scheduled work period in any given calendar day (e.g., 8:00 a.m. to 5:00 p.m.) for the application of rates based on working hours.

A Miscellaneous Service Order Charge as described in 5.4.2 preceding may be applicable to services ordered from this section.

13.1 Additional Engineering

Additional Engineering, including engineering reviews as set forth in 5.4.3 preceding, will be undertaken only after the Telephone Company has notified the customer that additional engineering charges apply as set forth in 17.4.2 following, and the customer agrees to such charges.

Additional Engineering will be provided by the Telephone Company at the request of the customer only when:

(A) A customer requests additional technical information after the Telephone Company has already provided the technical information normally included on the Design Layout Report (DLR) as set forth in 6.1.5 and 7.1.6 preceding.

(B) Additional Engineering time is incurred by the Telephone Company to engineer a customer's request for a customized service as set forth in 7.1.2 preceding.

(C) A customer requested Design Change requires the expenditure of Additional Engineering time. Such additional engineering time is incurred by the Telephone Company for the engineering review as set forth in 5.4.3 preceding. The charge for additional engineering time relating to the engineering review, which is undertaken to determine if a design change is indeed required, will apply whether or not the customer authorizes the Telephone Company to proceed with the Design Change. In this case the Design Change charge, as set forth in 17.4.1(C) following, does not apply unless the customer authorizes the Telephone Company to proceed with the Design Change.

TARIFF BRANCH
RECEIVED
7/17/2006
PUBLIC SERVICE
COMMISSION
OF KENTUCKY

13. Additional Engineering, Additional Labor and Miscellaneous Services (Cont'd)

13.2 Additional Labor

Additional Labor is that labor requested by the customer on a given service and agreed to by the Telephone Company as set forth in 13.2.1 through 13.2.5 following. The Telephone Company will notify the customer that Additional Labor charges as set forth in 17.4.3 following will apply before any additional labor is undertaken. A call-out of a Telephone Company employee at a time not consecutive with the employee's scheduled work period is subject to a minimum charge of four hours. When provisioning or restoring Telecommunications Service Priority services, the Telephone Company will, when possible, notify the customer of the applicability of these Additional Labor charges.

13.2.1 Overtime Installation

Overtime installation is that Telephone Company installation effort outside of normally scheduled working hours.

13.2.2 Overtime Repair

Overtime repair is that Telephone Company effort performed outside of normally scheduled working hours.

13.2.3 Standby

Standby includes all time in excess of one-half (1/2) hour during which Telephone Company personnel standby to make installation acceptance tests or cooperative tests with a customer to verify facility repair on a given service.

13.2.4 Testing and Maintenance with Other Telephone Companies

Additional testing, maintenance or repair of facilities which connect other telephone companies is that which is in addition to the normal effort required to test, maintain or repair facilities provided solely by the Telephone Company.

13.2.5 Other Labor

Other labor is that additional labor not included in 13.2.1 through 13.2.4 preceding and labor incurred to accommodate a specific customer request that involves only labor which is not covered by any other section of this tariff.

TARIFF BRANCH
RECEIVED
7/17/2006
PUBLIC SERVICE
COMMISSION
OF KENTUCKY

13. Additional Engineering, Additional Labor and Miscellaneous Services (Cont'd)

13.3 Miscellaneous Services

13.3.1 Testing Services

Testing Services offered under this section of the tariff are optional and subject to rates and charges as set forth in 17.4.4 following. A call-out of a Telephone Company employee at a time not consecutive with the employee's scheduled work period is subject to a minimum charge of four hours. Other testing services, as described in 6.2.4 and 7.1.7 preceding, are provided by the Telephone Company in association with Access Services and are furnished at no additional charge.

Testing Services are normally provided by Telephone Company personnel at Telephone Company locations; however, provisions are made in (B) (2) following for a customer to request Telephone Company personnel to perform Testing Services at the customer designated premises.

The offering of Testing Services under this section of the tariff is made subject to the availability of the necessary qualified personnel and test equipment at the various test locations mentioned in (A) and (B) following.

(A) Switched Access Service

Testing Services for Switched Access are comprised of (a) tests which are performed during the installation of a Switched Access Service, (i.e., Acceptance Tests), (b) tests which are performed after customer acceptance of such access services and which are without charge (i.e., routine testing) and (c) additional tests which are performed during or after customer acceptance of such access services and for which additional charges apply, (i.e., Additional Cooperative Acceptance Tests and in-service tests).

Routine tests are those tests performed by the Telephone Company on a regular basis, as set forth in 6.2.4 preceding which are required to maintain Switched Access Service. Additional in-service tests may be done on an automatic basis (no Telephone Company or customer technicians involved), on a manual basis [Telephone Company technician(s) involved at Telephone Company office(s) and Telephone Company or customer technician(s) involved at the customer designated premises].

Testing services are ordered to the Dial Tone Office for FGA, to the access tandem or end office for FGB (wherever the FGB service is ordered) and to the end office for FG's C and D.

TARIFF BRANCH
RECEIVED
7/17/2006
PUBLIC SERVICE
COMMISSION
OF KENTUCKY

13. Additional Engineering, Additional Labor and Miscellaneous Services (Cont'd)

13.3 Miscellaneous Services (Cont'd')

13.3.1 Testing Services (Cont'd)

(A) Switched Access Service (Cont'd)

(1) Additional Cooperative Acceptance Testing

Additional Cooperative Acceptance Testing of Switched Access Service involves the Telephone Company provision of a technician at its office(s) and the customer provision of a technician at its premises, with suitable test equipment to perform the required tests.

Additional Cooperative Acceptance Tests may, for example, consist of the following tests:

- Impulse Noise
- Phase Jitter
- Signal to C-Notched Noise Ratio
- Intermodulation (Nonlinear) Distortion
- Frequency Shift (Offset)
- Envelope Delay Distortion
- Dial Pulse Percent Break

(2) Additional Automatic Testing

Additional Automatic Testing (AAT) of Switched Access Services (Feature Groups B, C and D), is a service where the customer provides remote office test lines and 105 test lines with associated responders or their functional equivalent. The customer may order, at additional charges, gain-slope and C-notched noise testing and may order the routine tests (1004 Hz loss, C-Message Noise and Balance) on an as-needed or more than routine schedule.

The Telephone Company will provide an AAT report that lists the test results for each trunk tested. Trunk test failures requiring customer participation for trouble resolution will be provided to the customer on an as-occurs basis.

The Additional Tests, (i.e., gain slope, C-notched noise, 1004 Hz loss, C-message noise and balance) may be ordered by the customer at additional charges, 60 days prior to the start of the customer prescribed schedule. The rates for Additional Automatic Tests are as set forth in 17.4.4(B) following.

TARIFF BRANCH
RECEIVED
7/17/2006
PUBLIC SERVICE
COMMISSION
OF KENTUCKY

13. Additional Engineering, Additional Labor and Miscellaneous Services (Cont'd)

13.3 Miscellaneous Services (Cont'd)

13.3.1 Testing Services (Cont'd)

(A) Switched Access Service (Cont'd)

(3) Additional Manual Testing

Additional Manual Testing (AMT) of Switched Access Services (Feature Groups A, B, C, and D and Directory Access Service not routed through an access tandem), is a service where the Telephone Company provides a technician at its office(s) and the Telephone Company or customer provides a technician at the customer designated premises, with suitable test equipment to perform the required tests. Such additional tests will normally consist of gain-slope and C-notched noise testing. However, the Telephone Company will conduct any additional tests which the IC may request.

The Telephone Company will provide an AMT report listing the test results for each trunk tested. Trunk test failures requiring customer participation for trouble resolution will be provided to the customer on a per occurrence basis.

The Additional Manual Tests may be ordered by the customer at additional charges, 60 days prior to the start of the testing schedule as mutually agreed to by the customer and the Telephone Company.

The rates for Additional Manual Testing are as set forth in 17.4.4(C) following.

(4) Obligations of the Customer

(A) The customer shall provide the Remote Office Test Line priming data to the Telephone Company, as appropriate, to support routine testing as set forth in 6.2.4(B) preceding or AAT as set forth in 13.3.1(A)(2) preceding.

(B) The customer shall make the facilities to be tested available to the Telephone Company at times mutually agreed upon.

TARIFF BRANCH
RECEIVED
7/17/2006
PUBLIC SERVICE
COMMISSION
OF KENTUCKY

13. Additional Engineering, Additional Labor and Miscellaneous Services (Cont'd)

13.3 Miscellaneous Services (Cont'd)

13.3.1 Testing Services (Cont'd)

(B) Special Access Service

The Telephone Company will provide assistance in performing specific tests requested by the customer.

(1) Additional Cooperative Acceptance Testing

When a customer provides a technician at its premises or at an end user's premises, with suitable test equipment to perform the requested tests, the Telephone Company will provide a technician at its office for the purpose of conducting Additional Cooperative Acceptance Testing on Voice Grade Services. At the customers' request, the Telephone Company will provide a technician at the customer's premises or at the end user premises. These tests may, for example, consist of the following:

- Attenuation Distortion (i.e., frequency response)
- Intermodulation Distortion (i.e., harmonic distortion)
- Phase Jitter
- Impulse Noise
- Envelope Delay Distortion
- Echo Control
- Frequency Shift

(2) Additional Manual Testing

The Telephone Company will provide a technician at its premises, and the Telephone Company or customer will provide a technician at the customer's designated premises with suitable test equipment to perform the requested tests.

(3) Obligation of the Customer

When the customer subscribes to Testing Service as set forth in this section, the customer shall make the facilities to be tested available to the Telephone Company at times mutually agreed upon.

TARIFF BRANCH
RECEIVED
7/17/2006
PUBLIC SERVICE
COMMISSION
OF KENTUCKY

13. Additional Engineering, Additional Labor and Miscellaneous Services (Cont'd)

13.3 Miscellaneous Services (Cont'd)

13.3.2 Maintenance of Service

(A) When a customer reports a trouble to the Telephone Company for clearance and no trouble is found in the Telephone Company's facilities, the customer shall be responsible for payment of a Maintenance of Service charge as set forth in 17.4.4(F) following for the period of time from when Telephone Company personnel are dispatched, at the request of the customer, to the customer designated premises to when the work is completed. Failure of Telephone Company personnel to find trouble in Telephone Company facilities will result in no charge if the trouble is actually in those facilities, but not discovered at the time.

(B) The customer shall be responsible for payment of a Maintenance of Service charge when the Telephone Company dispatches personnel to the customer designated premises, and the trouble is in equipment or communications systems provided by other than the Telephone Company or in detariffed CPE provided by the Telephone Company.

In either (A) or (B) preceding, no credit allowance will be applicable for the interruption involved if the Maintenance of Service Charge applies.

13.3.3 Telecommunications Service Priority - TSP

(A) Priority installation and/or restoration of National Security Emergency Preparedness (NSEP) telecommunications services shall be provided in accordance with Part 64.401, Appendix A, of the Federal Communications Commission's (FCC's) Rules and Regulations.

In addition, TSP System service shall be provided in accordance with the guidelines set forth in "Telecommunications Service Priority (TSP) System for National Security Emergency Preparedness (NSEP) Service Vendor Handbook" (NCSH 3-1-2) dated July 9, 1990, and "Telecommunications Service Priority System for National Security Emergency Preparedness Service User Manual" (NCSM 3-1-1).

The TSP System is a service, developed to meet the requirements of the Federal Government, as specified in the Service Vendor's Handbook and Service User's Manual which provides the regulatory, administrative and operational framework for the priority installation and/or restoration of NSEP telecommunications services. These include both Switched and Special Access Services. The TSP System applies only to NSEP telecommunications services, and requires and authorizes priority action by the Telephone Company providing such services.

For Switched Access Service, the TSP System's applicability is limited to those services which the Telephone Company can discreetly identify for priority provisioning and/or restoration.

TARIFF BRANCH
RECEIVED
7/17/2006
PUBLIC SERVICE
COMMISSION
OF KENTUCKY

INTRASTATE ACCESS SERVICES TARIFF

13. Additional Engineering, Additional Labor and Miscellaneous Services (Cont'd)

13.3 Miscellaneous Services (Cont'd)

13.3.3 Telecommunications Service Priority - TSP (Cont'd)

(B) A Telecommunications Service Priority charge applies as set forth in 17.4.4 when a request to provide or change a Telecommunications Service Priority is received subsequent to the issuance of an Access Order to install the service.

Additionally, a Miscellaneous Service Order Charge as set forth in 17.4.1 will apply to Telecommunications Service Priority requests that are ordered subsequent to the initial installation of the associated access service.

A Telecommunications Service Priority charge does not apply when a Telecommunications Service Priority is discontinued or when ordered coincident with an Access Order to install or change service.

In addition, Additional Labor rates as set forth in 17.4.3 may be applicable when provisioning or restoring Switched or Special Access Services with Telecommunications Service Priority.

When the customer requests an audit or a reconciliation of the Telephone Company's Telecommunications Service Priority records, a Miscellaneous Service Order Charge as set forth in 17.4.1(D) and Additional Labor rates as set forth in 17.4.3 are applicable.

13.3.4 Miscellaneous Equipment

(A) Controller Arrangement

This arrangement enables the customer to control up to 48 transfer functions at a Telephone Company central office via a remote keyboard terminal capable of either 300 or 1200 bps operation. Included as part of the Controller Arrangement is a dial-up data station located at the Telephone Company Central Office to provide access to the Controller Arrangement. This dial-up data station consists of a 212A DATAPHONE data set and an appropriate Telephone Company provided channel.

The Controller Arrangement must be located in the same Telephone Company central office as the transfer functions which it controls.

Charges for the Controller Arrangement are set forth in 17.4.4(H) following.

TARIFF BRANCH
RECEIVED
7/17/2006
PUBLIC SERVICE
COMMISSION
OF KENTUCKY

INTRASTATE ACCESS SERVICES TARIFF

13. Additional Engineering, Additional Labor and Miscellaneous Services (Cont'd)

13.4 Presubscription

13.4.1 InterLATA Presubscription

Pursuant to the Federal Communications Commission's Memorandum Opinion and Order, CC Docket No. 83-1145, Phase I, adopted May 31, 1985, and released June 12, 1985, the Allocation Plan, outlined in the Appendix B of this Order, will be available for inspection in the Public Reference Room of the Tariff Division at the Federal Communications Commission's Washington D.C., location or may be obtained from the Commission's commercial contractor.

(A) Presubscription is the process by which end user customers may select and designate to the Telephone Company an IC to access, without an access code, for interLATA, intrastate calls. This IC is referred to as the end user's predesignated IC.

(B) On the effective date of this tariff, all existing end users have access to intrastate MTS/WATS. No later than 85 days prior to conversion to Feature Group D in a serving end office, the Telephone Company will notify end users of the availability of equal access in their particular area. The notification will include the names of all ICs wishing to participate in the presubscription process. This notification will be sent via U.S. Mail to each end user of record served by the end office to be converted.

(C) End users may select one of the following options at no charge:

- indicate a primary IC for all of its lines,
- indicate a different IC for each of its lines.

Only one IC may be selected for each line or lines terminating in the same hunt group.

End users may designate that they do not want to presubscribe to any IC. The end user must arrange this designation by directly notifying the Telephone Company's business office. This choice will require the end user to dial an access code (10XXX or 101XXXX) for all intrastate calls.

After the end user's initial selection of a predesignated IC or the designation that they do not want to presubscribe to any IC, for any change in selection after conversion to Equal Access in the serving end office, a nonrecurring charge, as set forth in 17.4.4(I) following applies.

TARIFF BRANCH
RECEIVED
7/17/2006
PUBLIC SERVICE
COMMISSION
OF KENTUCKY

INTRASTATE ACCESS SERVICES TARIFF

13. Additional Engineering, Additional Labor and Miscellaneous Services (Cont'd)

13.4 Presubscription (Cont'd)

13.4.1 InterLATA Presubscription (Cont'd)

(D) End users not responding to the initial notification will be sent a second notification for the selection of a predesignated IC no earlier than 40 days prior to or no later than 90 days after the conversion to Equal Access in a serving end office. This second notification will indicate the primary IC that has been assigned to them if they fail to respond to the second notification.

After the allocation process has been completed, end users assigned to an IC via the allocation process may change their IC one time within six months after conversion to Equal Access in the serving end office at no charge. Following the six month period after conversion to Equal Access for any change in selection, a nonrecurring charge as set forth in 17.4.4(I) following, applies.

(E) When an end user indicates more than one IC selection on the return notification or returns an illegible return notification, the Telephone Company will contact the end user for clarification. If the end user indicates an IC selection on the return notification that does not match with information provided by an IC and both notifications indicate the same authorization date, the end user's notification takes precedence and the Telephone Company will process the end user's selection. In the event that two or more ICs provide to the Telephone Company notifications with the same authorization date and neither notification has been processed, the Telephone Company will contact the end user for clarification. A list of these end users in conflict must be sent to the affected IC by the Telephone Company.

In the event that two or more ICs have provided to the Telephone Company notifications with the same authorization date(s), and one IC notification has already been processed by the Telephone Company, those IC notifications not yet processed would be returned to the ICs.

(F) New end users who are served by end offices equipped with Feature Group D will be asked to presubscribe to an IC at the time they place an order with the Telephone Company for Telephone Exchange Service. They may select either of the following options. There will be no charge for this initial selection.

- designate a primary IC for all of its lines,
- designate a different IC for each of its lines.

Only one IC may be selected for each individual line, or lines terminating in the same hunt group. Subsequent to the installation of Telephone Exchange Service and after the end user's initial selection of a predesignated IC, for any change in selection, a nonrecurring charge, as set forth in 17.4.4(I) following, applies.

TARIFF BRANCH
RECEIVED
7/17/2006
PUBLIC SERVICE
COMMISSION
OF KENTUCKY

13. Additional Engineering, Additional Labor and Miscellaneous Services (Cont'd)

13.4 Presubscription (Cont'd)

13.4.1 InterLATA Presubscription (Cont'd)

(G) If the new end user fails to designate an IC as its predesignated IC prior to the date of installation of Telephone Exchange Service, the Telephone Company will (1) allocate the end user to an IC based upon current IC presubscription ratios, (2) require the end user to dial an access code (10XXX or 101XXXX) for all intrastate calls, or (3) block the end user from intrastate calling. The end user will be notified which option will be applied if they fail to presubscribe to an IC. An allocated or blocked end user may designate another, or initial, IC as its predesignated IC one time at no charge, if it is requested within six months after the installation of Telephone Exchange Service.

For any change in selection after 6 months from the installation of Telephone Exchange Service, a nonrecurring charge, as set forth in 17.4.4(I) following applies.

(H) If an IC elects to discontinue its Feature Group D service offering prior to or within 2 years of the conversion, the IC will notify the Telephone Company of the cancellation. The IC will also notify all end users which selected them that they are canceling their service and that they should contact the Telephone Company to select a new primary IC. The IC will also inform the end user that it will pay the presubscription change charge. The canceling IC will then be billed by the Telephone Company the appropriate charge for each end user for a period of two years from the discontinuance of Feature Group D service.

(I) If an IC elects to change or discontinue use of a Carrier Identification Code (CIC) for any reasons other than those set forth in (H) above, the IC will identify to the Telephone Company any affected end users and advise the Telephone Company of the new CIC to be assigned to these end users. If the CIC change involves a change of carrier for any end users, the IC will notify the affected end users of the change. The Telephone Company will change the predesignated carrier code of each end user identified by the IC to the new CIC and bill the IC the nonrecurring charge set forth in 17.4.4(I) following for each end user line or trunk that is changed.

TARIFF BRANCH
RECEIVED
7/17/2006
PUBLIC SERVICE
COMMISSION
OF KENTUCKY

13. Additional Engineering, Additional Labor and Miscellaneous Services (Cont'd)

13.4 Presubscription (Cont'd)

13.4.2 IntraLATA Presubscription

Pursuant to the December 29, 1994 order issued by the Public Service Commission of Kentucky in Administrative Case No. 323, Phase I, An Inquiry Into IntraLATA Toll Competition, An Appropriate Compensation Scheme for Completion of IntraLATA Calls by Interexchange Carriers, and WATS Jurisdictionality, the following intraLATA presubscription implementation procedures are applicable for intraLATA toll calls.

(A) IntraLATA Presubscription is the process by which end user customers may select and designate to the Telephone Company an interexchange Carrier (IC) or local exchange carrier (LEC) to access, without an access code, for intraLATA toll calls. This IC or LEC is referred to as the end user's intraLATA Primary Interexchange Carrier (PIC).

(B) IntraLATA presubscription is only available from Telephone Company end offices which have been converted to intraLATA equal access.

(C) For those Telephone Company end offices which have not been converted to interLATA equal access by July 1995, interLATA and intraLATA equal access will be implemented concurrently. An end user's initial intraLATA presubscription selection will be obtained at the same time and in the same manner as an end user's initial interLATA presubscription selection described in Section 13.4.1 preceding.

(D) For those Telephone Company end offices which convert to intraLATA equal access subsequent to interLATA equal access, the Primary Toll Carrier LEC will be designated as an end user's intraLATA PIC at conversion. End users must contact the Telephone Company business office to provide their initial intraLATA presubscription selections.

(E) New end users who are served by end offices equipped with intraLATA equal access will be asked to select and intraLATA PIC at the time they place an order with the Telephone Company for Telephone Exchange Service. There will be no charge for this initial selection.

(F) After the end user's initial selection of an intraLATA PIC, when an intraLATA PIC change is made independent of an interLATA PIC change, a nonrecurring charge, as set forth in Section 17.4.4(I) following applies.

TARIFF BRANCH
RECEIVED
7/17/2006
PUBLIC SERVICE
COMMISSION
OF KENTUCKY

INTRASTATE ACCESS SERVICES TARIFF

13. Additional Engineering, Additional Labor and Miscellaneous Services (Cont'd)

13.5 Verification of Orders for Long Distance Telemarketing

No IC shall submit to the Telephone Company a Primary Interexchange Carrier (PIC) change order generated by telemarketing unless and until the order has first been confirmed in accordance with one of the following procedures:

(A) The IC obtains the billed party's (e.g., an end user or the designator of the PIC for a pay telephone) written authorization to submit the PIC change order. The written authorization shall take the form of a letter of agency which:

- shall be a separate document whose sole purpose is to authorize an interexchange carrier to initiate a primary interexchange carrier change.

- shall be signed and dated by the billed party of the telephone line(s) requesting the primary interexchange carrier change.

- shall not be combined with inducements of any kind on the same document.

- shall not suggest or require that the billed party take some action in order to retain the billed party's current interexchange carrier.

- shall have all portions translated into another language if any portion of the letter of agency is translated into another language.

- may be combined with checks that contain only the required letter of agency language that follows and the necessary information to make the check a negotiable instrument. At a minimum, the letter of agency should be printed with a type of sufficient size and readable type to be clearly legible and must contain clear and unambiguous language that confirms:

  -- The billed party's billing name and address and each telephone number to be covered by the PIC change order; and

  -- The billed party's decision to change the PIC to the IC; and

  -- The billed party's intention to designate the interexchange carrier to act as it's agent for the PIC change; and

  -- The billed party's understanding that only one interexchange carrier may be designated as the billed party's intrastate interLATA primary interexchange carrier for any one telephone number. To the extent that a jurisdiction allows the selection of additional primary interexchange carriers, the letter of agency must contain separate statements regarding these choices.

TARIFF BRANCH
RECEIVED
7/17/2006
PUBLIC SERVICE
COMMISSION
OF KENTUCKY

13. Additional Engineering, Additional Labor and Miscellaneous Services (Cont'd)

13.5 Verification of Orders for Long Distance Telemarketing (Cont'd)

(A) (Cont'd)

Any carrier designated as a primary interexchange carrier must be the carrier directly setting the rates for the billed party. One interexchange carrier can be both the billed party's interstate primary interexchange carrier and a billed party's intrastate primary interexchange carrier; and

-- The billed party's understanding that they may incur a charge for changing the primary interexchange carrier;

(B) The IC obtains the billed party's electronic authorization to submit the PIC change order. The billed party will place a call, from the telephone number(s) on which the PIC is to be changed, to a toll free telephone number that is dedicated to the IC's PIC verification process. The verification number will connect the billed party to a voice response unit that records the originating ANI and the required information described in (A) preceding; or

(C) An appropriately qualified and independent third party, operating in a location physically separate from the telemarketing representative, obtains the billed party's oral authorization to submit the PIC change order. This authorization must confirm the order and include appropriate verification data (e.g., the billed party's date of birth or social security number); or

(D) Within three business days of the billed party's request for a PIC change, the IC must send them an information package by first class mail which includes:

- a statement that the enclosed information is being sent to confirm a telemarketing order placed by the billed party within the previous week,
- the name of the current and soliciting ICs,
- the terms, conditions or charges for the PIC change,
- the name of the person who ordered the change,
- the name, address and telephone number of both the customer and the soliciting IC,
- a statement advising the billed party that, absent their response, the change will be implemented 14 days from the date the information package was mailed to them,
- the name, address and telephone number of a contact point at the FCC for consumer complaints.

The IC must provide a postpaid postcard which the billed party can use to deny, cancel or confirm the order. The IC must wait 14 days after the information package is mailed to the billed party before submitting the PIC change order to the Telephone Company.

TARIFF BRANCH
RECEIVED
7/17/2006
PUBLIC SERVICE
COMMISSION
OF KENTUCKY

INTRASTATE ACCESS SERVICES TARIFF

13. Additional Engineering, Additional Labor and Miscellaneous Services (Cont'd)

13.6 Unauthorized PIC Change

If an IC requests a Primary Interexchange Carrier (PIC) change on behalf of a billed party (e.g., an end user or the designator of the PIC for a pay telephone), and the billed party subsequently denies requesting the change, and the IC is unable to substantiate the change with a letter of authorization signed by the billed party; then:

- The billed party will be reassigned to its previously selected IC. No charge will apply to the billed party for this reassignment.

- The Unauthorized Presubscription Change Charge as set forth in 17.4.4(J) will apply to the IC that requested the unauthorized PIC change. This charge is applied in addition to the $5.00 PIC change charge.

13.7 Blocking Service

13.7.1 900 Blocking Service

The Telephone Company will provide 900 Blocking Service to customers who obtain local exchange services from the Telephone Company under its general or local exchange tariffs and to customers who obtain Feature Group A Switched Access service under this tariff. This service is only provided at appropriately equipped end offices. Those offices providing 900 Blocking Service are identified in NATIONAL EXCHANGE CARRIER ASSOCIATION, INC. TARIFF F.C.C. NO. 4.

On each line or trunk for which 900 Blocking Service is ordered, the Telephone Company will block all direct dialed calls placed to a 900 number. When capable, the Telephone Company will route the blocked calls to a recorded message.

A Blocking Service charge as set forth in 17.4.4(K) following is applicable when ordered by the end user customer with the following exceptions:

- Blocking access to 900 Service is offered to all subscribers at no charge at the time telephone service is established at a new number and for 60 days thereafter.

The Blocking Service charge is applied for each line, trunk or Feature Group A Switched Access service to which 900 Blocking Service is added or removed. Requests by subscribers to remove 900 Blocking Service must be in writing. This charge does not apply when blocking is removed from an exchange line or trunk or Feature Group A Switched Access line at the same time that it is disconnected.

TARIFF BRANCH
RECEIVED
7/17/2006
PUBLIC SERVICE
COMMISSION
OF KENTUCKY

13. Additional Engineering, Additional Labor and Miscellaneous Services (Cont'd)

13.8 Reserved for Future Use

13.9 Billing Name and Address Service

13.9.1 General Description

(A) Billing Name and Address (BNA) Service is the provision by the Telephone Company to an intrastate service provider who is a customer of the Telephone Company of the complete billing name, street address, city or town, state and zip code for a telephone number or calling card account number assigned by the Telephone Company. An intrastate service provider is defined as an interexchange carrier, an operator service provider, an enhanced service provider or any other provider of intrastate telecommunications services.

(B) BNA Service is provided only for the purposes of allowing customers to bill their end users for telephone services provided by the customer, order entry and customer service information, fraud prevention, identification of end users who have moved to a new address, any purpose associated with equal access requirement, and information associated with Local Exchange Carrier (LEC) calling card calls, collect calls and third party calls.

BNA information may not be resold or used for any other purpose including, but not limited to, marketing or merchandising activities.

(C) BNA information associated with listed/published telephone numbers will be provided. Requests for BNA information associated with non-published and unlisted telephone numbers will be provided, unless the subscriber to a nonpublished or unlisted telephone number has affirmatively requested that its BNA not be disclosed.

13.9.2 Undertaking of the Telephone Company

(A) A standard format for the receipt of BNA requests and the provision of BNA information will be established by the Telephone Company.

(B) Standard response to BNA requests will be by First Class Mail. Standard format will be on paper. Optional Magnetic Tape formatting will be offered where available.

(C) Where facilities are available, the customer may request an optional specialized output format required to meet a specific customer need.

TARIFF BRANCH
RECEIVED
7/17/2006
PUBLIC SERVICE
COMMISSION
OF KENTUCKY

INTRASTATE ACCESS SERVICES TARIFF

13. Additional Engineering, Additional Labor and Miscellaneous Services (Cont'd)

13.9 Billing Name and Address Service (Cont'd)

13.9.2 Undertaking of the Telephone Company (Cont'd)

(D) The Telephone Company will make every effort to provide accurate and complete BNA data. The Telephone Company makes no warranties, expressed or implied, as to the accuracy or completeness of this information.

(E) The Telephone Company will not disclose BNA information to parties other than intrastate service providers and their authorized billing agents as defined in 13.9.1(A) preceding. BNA disclosure is limited to those purposes as defined in 13.9.1(B) preceding.

(F) The Telephone Company reserves the right to request from an intrastate service provider who has placed an order for BNA service, the source data upon which the interexchange carrier has based the order. This request is made to ensure that the BNA information is to be used only for purposes as described in 13.9.1(B) preceding. The Telephone Company will not process the order until such time as the intrastate service provider supplies the requested data.

13.9.3 Obligations of the Customer

(A) The customer shall order BNA Service on a separate BNA Order. The order must identify both the customer's authorized representative and the address to which the information is to be sent.

(B) The customer shall treat all BNA information as confidential. The customer shall insure that BNA information is used only for the purposes as described in 13.9.1(B) preceding.

(C) The customer shall not publicize or represent to others that the Telephone Company jointly participates with the customer in the development of the customer's end user records it assembles through the use of BNA Service.

(D) Upon request, the customer will provide to the Telephone Company the source data upon which the customer has based an order for BNA service. The Telephone Company will not process the order until such time as the customer provides the requested data.

TARIFF BRANCH
RECEIVED
7/17/2006
PUBLIC SERVICE
COMMISSION
OF KENTUCKY

INTRASTATE ACCESS SERVICES TARIFF

13. Additional Engineering, Additional Labor and Miscellaneous Services (Cont'd)

13.9 Billing Name and Address Service (Cont'd)

13.9.4 Rate Regulations

(A) For each order for BNA information received by the Telephone Company, a BNA Order charge applies. In addition, a charge applies for each customer specific record provided. The BNA Order Charge and the Per Record Charge are specified in 17.4.4 following.

(B) Where available, the customer may order the response formatted on Magnetic Tape. The Optional Magnetic Tape Charge is specified in 17.4.4 following and is in addition to the BNA Order Charge and the BNA Record Charge.

(C) Where available, the customer may order an output format other than a standard paper format in order to meet a customer's specific requirement. This option is subject to an hourly programming charge as specified in 17.4.4 following and is in addition to the BNA Order Charge and the BNA Record Charge.

13.10 Reserved for Future Use

13.11 Reserved for Future Use

13.12 Reserved for Future Use

TARIFF BRANCH
RECEIVED
7/17/2006
PUBLIC SERVICE
COMMISSION
OF KENTUCKY

13. Additional Engineering, Additional Labor and Miscellaneous Services (Cont'd)

13.13 Access Services Billing

Billing Mediums

The customer shall select the primary medium in which its official access service bills and customer service records are to be provided. This selection shall be on an account level basis, and shall be submitted in writing to the Telephone Company.

(A) Primary Bill

At no charge to the customer, the customer shall select as the primary billing medium one of the following billing formats: standard paper, magnetic tape, or data transmission. The primary billing medium shall serve as the customer's official bill. Should the customer fail to make a selection, the official copy of the customer's access service bills and customer service records will be provided in the standard paper format.

Upon acceptance by the Telephone Company of an order for electronic data transfer, the Telephone Company will determine the period of time to implement the transmission of such material on an individual order basis.

When magnetic tape or data transmission is requested as the primary monthly bill, the customer must sign a Document of Understanding.

When magnetic tape or data transmission is requested as the primary monthly bill, the customer will receive an abbreviated bill in paper format. The abbreviated bill will contain the following sections: All Page, Balance Due, Meet Point Billing Cross Reference, Detail of Payments Applied, Detail of Balance Due, Detail of Late Payment Charges, and Other Charges and Credits.

The Telephone Company will accept a request for change from one form of primary billing medium to another at no charge to the customer.

(B) Secondary/Additional Bills

At the customer's written request, a secondary bill, in addition to the customer's primary bill will be provided on a monthly basis. The customer may choose as the medium for the secondary bill one of the following formats: standard paper, magnetic tape, or data transmission. Charges for the provision of a secondary bill are set forth in 17.4.4(M) following.

Additional copies of a customer's previous monthly access service bills will be provided in paper format, or magnetic tape/data transmission if the original bill was generated in this format. Requests for additional copies of previous monthly bills must be submitted in writing and shall specify the bill dates requested. Such a request, when not the result of a Telephone Company error will be subject to charges as set forth in 17.4.4(M) following. Unless specified otherwise, additional copies of the customer's access service bills and/or magnetic tapes will be sent via U.S. Mail Service.

TARIFF BRANCH
RECEIVED
7/17/2006
PUBLIC SERVICE
COMMISSION
OF KENTUCKY

INTRASTATE ACCESS SERVICES TARIFF

14. Exceptions to Access Service Offerings

The services offered under the provisions of this tariff are subject to availability as set forth in 2.1.4 preceding. In addition, the following exceptions apply:

- Reserved For Future Use.

TARIFF BRANCH
RECEIVED
7/17/2006
PUBLIC SERVICE
COMMISSION
OF KENTUCKY

INTRASTATE ACCESS SERVICES TARIFF

15. Access Service Interfaces and Transmission Specifications

15.1 contains Switched Access Service Options (which are comprised of Interface Groups, Supervisory Signaling, Entry Switch Receive Level and Local Transport Termination) and Transmission Specifications. 15.2 describes Special Access Service Network Channel (NC) codes and Network Channel Interface (NCI) codes. 15.3 contains Interface Group, Premises Interface Code and Standard Transmission Specifications applicable to Directory Access Service.

15.1 Switched Access Service

Ten Interface Groups are provided for terminating the Local Transport Entrance Facility at the customer's designated premises. Each Interface Group provides a specified premises interface (e.g., two-wire, four-wire, DS1, etc.). Where transmission facilities permit, and at the option of the customer, the Entrance Facility may be provided with optional features as set forth in 15.1.1 following.

As a result of the customer's access order and the type of Telephone Company transport facilities serving the customer designated premises, the need for signaling conversions or two-wire or four-wire conversions, or the need to terminate digital or high frequency facilities in channel bank equipment may require that Telephone Company equipment be placed at the customer designated premises. For example, if a voice frequency interface is ordered by the customer and the Telephone Company facilities serving the customer designated premises are digital, then Telephone Company channel bank equipment must be placed at the customer designated premises in order to provide the voice frequency interface ordered by the customer.

TARIFF BRANCH
RECEIVED
7/17/2006
PUBLIC SERVICE
COMMISSION
OF KENTUCKY

INTRASTATE ACCESS SERVICES TARIFF

15. Access Service Interfaces and Transmission Specifications (Cont'd)

15.1 Switched Access Service (Cont'd)

15.1.1 Local Transport Interface Groups

Interface Groups are combinations of technical parameters which describe the Telephone Company handoff at the point of termination at the customer designated premises. The technical specifications concerning the available interface groups are set forth in (A) through (D) following.

Interface Group 1 is provided with Type C Transmission Specifications, as set forth in 15.1.2(C) following, and Interface Groups 2 through 10 are provided with Type A or B Transmission Specifications, as set forth respectively in 15.1.2(E) and (F) following, depending on the Feature Group and whether the Access Service is routed directly or through an access tandem. All Interface Groups are provided with Data Transmission Parameters.

Only certain premises interfaces are available at the customer designated premises. The premises interfaces associated with the Interface Groups may vary among Feature Groups.

(A) Interface Group 1

Interface Group 1, except as set forth in the following, provides two-wire voice frequency transmission at the point of termination at the customer designated premises. The interface is capable of transmission of voice and associated telephone signals within the frequency bandwidth of approximately 300 to 3000 Hz.

Interface Group 1 is not provided in association with FGC and FGD when the first point of switching is an access tandem. In addition, Interface Group 1 is not provided in association with FGB, FGC or FGD when the first point of switching provides only four-wire terminations.

The transmission path between the point of termination at the customer designated premises and the customer serving wire center may be comprised of any form or configuration of plant capable of and typically used in the telecommunications industry for the transmission of voice and associated telephone signals within the frequency bandwidth of 300 to 3000 Hz.

The interface is provided with loop supervisory signaling. When the interface is associated with FGA, such signaling will be loop start or ground start signaling. When the interface is associated with FGB, FGC or FGD, such signaling, except for two-way calling which is E&M signaling, will be reverse battery signaling.

TARIFF BRANCH
RECEIVED
7/17/2006
PUBLIC SERVICE
COMMISSION
OF KENTUCKY

INTRASTATE ACCESS SERVICES TARIFF

15. Access Service Interfaces and Transmission Specifications (Cont'd)

15.1 Switched Access Service (Cont'd)

15.1.1 Local Transport Interface Groups (Cont'd)

(B) Interface Group 2

Interface Group 2 provides four-wire voice frequency transmission at the point of termination at the customer designated premises. The interface is capable of transmission of voice and associated telephone signals within the frequency bandwidth of approximately 300 to 3000 Hz.

The transmission path between the point of termination at the customer designated premises and the customer serving wire center may be comprised of any form or configuration of plant capable of and typically used in the telecommunications industry for the transmission of voice and associated telephone signals within the frequency bandwidth of approximately 300 to 3000 Hz.

The interface is provided with loop supervisory signaling. When the interface is associated with FGA, such signaling will be loop start or ground start signaling. When the interface is associated with FGB, FGC or FGD, such signaling, except for two-way calling which is E&M signaling, will be reverse battery signaling.

(C) Interface Groups 3 through 5

Interface Groups 3 through 5 provide analog transmission at the point of termination at the customer designated premises. The various interfaces are capable of transmitting electrical signals at the frequencies illustrated following, with the capability to channelize voice frequency transmission paths. Certain frequencies within the bandwidth of the Interface Groups are reserved for Telephone Company use, e.g., pilot and carrier group alarm tones. Before the first point of switching, the Telephone Company will provide multiplex equipment to derive the transmission paths of frequency bandwidth of approximately 300 to 3000 Hz.

The interfaces are provided with individual transmission path SF supervisory signaling.

Interface Group Identification No.	Transmission Frequency Bandwidth	AnalogChannelized Voice Hierarchy Level	Maximum No. of Freq. Trans. Paths
3	60-108 kHz	Group	12
4	312-552 kHz	Supergroup	60
5	564-3084 kHz	Mastergroup	600

TARIFF BRANCH
RECEIVED
7/17/2006
PUBLIC SERVICE
COMMISSION
OF KENTUCKY

INTRASTATE ACCESS SERVICES TARIFF

15. Access Service Interfaces and Transmission Specifications (Cont'd)

15.1 Switched Access Service (Cont'd)

15.1.1 Local Transport Interface Groups (Cont'd)

(D) Interface Groups 6 through 10

Interface Groups 6 through 10 provide digital transmission at the point of termination at the customer designated premises. The various interfaces are capable of transmitting electrical signals at the nominal bit rates illustrated following, with the capability to channelize voice frequency transmission paths. Before the first point of switching, when analog switching utilizing analog terminations is provided, the Telephone Company will provide multiplex and channel bank equipment to derive transmission paths of a frequency bandwidth of approximately 300 to 3000 Hz. When digital switching or analog switching with digital carrier terminations is provided, the Telephone Company will provide a DS1 signal(s) in D3/D4 format.

The interfaces are provided with individual transmission path bit stream supervisory signaling.

Interface Group Identification No.	Nominal Bit Rate (Mbps)	Digital Hierarchy Level	Max. No. of Channelized Voice Freq. Trans. Paths
6	1.544	DS1	24
7	3.152	DS1C	48
8	6.312	DS2	96
9	44.736	DS3	672
10	274.176	DS4	4032

TARIFF BRANCH
RECEIVED
7/17/2006
PUBLIC SERVICE
COMMISSION
OF KENTUCKY

INTRASTATE ACCESS SERVICES TARIFF

15. Access Service Interfaces and Transmission Specifications (Cont'd)

15.1 Switched Access Service (Cont'd)

15.1.1 Local Transport Interface Groups (Cont'd)

(E) Local Transport Optional Features

Where transmission facilities permit, the Telephone Company will, at the option of the customer, provide the following features in association with Local Transport. An Access Order Charge as specified in 17.4.1(A) following is applicable on a per order basis when nonchargeable optional features are added subsequent to the installation of service (with the exception of the addition of 64 Clear Channel Capability to an existing service).

When the 64 Clear Channel Capability optional feature is installed on an existing facility, the addition will be treated as a discontinuance and start of service and all associated nonrecurring charges will apply.

- Customer Specified Entry Switch Receive Level

  Customer Specified Entry Switch Receive Level allows the customer to specify the receive transmission level at the first point of switching. The range of transmission levels which may be specified is described in Technical Reference TR-NPL-000334. This feature is available with Interface Groups 2 through 10 for Feature Groups A and B.

- Customer Specification of Local Transport Termination

  Customer Specification of Local Transport Termination allows the customer to specify, for Feature Group B routed directly to an end office or access tandem, a four-wire termination of the Local Transport at the first point of switching in lieu of a Telephone Company selected two-wire termination. This option is available only when the Feature Group B arrangement is provided with Type B Transmission Specifications.

- Supervisory Signaling

  Supervisory Signaling allows the customer to order an optional supervisory signaling arrangement for each transmission path provided where the transmission parameters permit, and where signaling conversion is required by the customer to meet its signaling capability.

TARIFF BRANCH
RECEIVED
7/17/2006
PUBLIC SERVICE
COMMISSION
OF KENTUCKY

15. Access Service Interfaces and Transmission Specifications (Cont'd)

15.1 Switched Access Service (Cont'd)

15.1.1 Local Transport Interface Groups (Cont'd)

(E) Local Transport Optional Features (Cont'd)

- 64 Clear Channel Capability

64 Clear Channel Capability allows the customer to transport voice or data signals over a 64 Kbps channel with no constraints on the quantity or sequence of ones and zero bits. This option employs the Bipolar 8 Zero Suppression (B8ZS) technique to permit customers to use the full 64 Kbps bandwidth of a DS0 channel. It is only available in suitably equipped electronic end offices as identified in NATIONAL EXCHANGE CARRIER ASSOCIATION, INC. TARIFF No. 4. 64 Clear Channel Capability, as described in Technical Reference GR-334-CORE, is available with Interface Groups 6 and 9 for Feature Groups C and D with Signaling System 7 (SS7) signaling.

The Interface Groups, as described in (A) through (D) preceding, represent industry standard arrangements. Where transmission parameters permit, the customer may select the following optional signaling arrangements in place of the signaling arrangements standardly associated with the Interface Groups.

- For Interface Groups 1 and 2 associated with FGB, FGC or FGD

  DX Supervisory Signaling,
  E&M Type I Supervisory Signaling,
  E&M Type II Supervisory Signaling, or
  E&M Type III Supervisory Signaling

- For Interface Group 2 associated with FGB, FGC or FGD and in addition to the preceding

  SF Supervisory Signaling or
  Tandem Supervisory Signaling

- For Interface Groups 3 through 5

  Optional Supervisory Signaling Not Available

- For Interface Groups 6 through 10

These Interface Groups may, at the option of the customer, be provided with individual transmission path SF supervisory signaling where such signaling is available in Telephone Company central offices. Generally such signaling is available only where the first point of switching provides an analog (i.e., non digital) interface to the transport termination.

TARIFF BRANCH
RECEIVED
7/17/2006
PUBLIC SERVICE
COMMISSION
OF KENTUCKY

15. Access Service Interfaces and Transmission Specifications (Cont'd)

15.1 Switched Access Service (Cont'd)

15.1.1 Local Transport Interface Groups (Cont'd)

(E) Local Transport Optional Features (Cont'd)

These optional Supervisory Signaling arrangements are not available in combination with the SS7 optional feature as described in 6.8.2(C) (2) preceding.

Additionally, in (F) following, there is a matrix of available Premises Interface Codes as a function of Interface Group, Telephone Company Switch Supervisory Signaling and Feature Group.

(F) Available Premises Interface Codes

Following is a matrix showing premises interface codes which are available for each Interface Group. Their availability is a function of the Telephone Company switch supervisory signaling and Feature Group. For explanations of these codes, see the Parameter Codes and Options as set forth in 15.2.2(A) following.

Interface Group	Telephone Company Switch Supervisory Signaling	Premises Interface Code	Feature Group A	B	C	D
1	LO	2LS2	X			
	LO	2LS3	X			
	GO	2GS2	X			
	GO	2GS3	X			
	LO, GO	2DX3	X			
	LO, GO	4EA3-E	X			
	LO, GO	4EA3-M	X			
	LO, GO	6EB3-E	X			
	LO, GO	6EB3-M	X			
	RV, EA, EB, EC3	2DX3		X	X	X
	RV, EA, EB, EC	4EA3-E		X	X	X
	RV, EA, EB, EC	4EA3-M		X	X	X
	RV, EA, EB, EC	6EB3-E		X	X	X
	RV, EA, EB, EC	6EB3-M		X	X	X
	EA, EB, EC	6EC3			X	X
	RV	2RV3-0		X	X	X
	RV	2RV3-T		X	X	X
	SS7	2NO2			X	X
2	LO, GO	4SF2	X			
	LO, GO	4SF3	X			
	LO	4LS2	X			
	LO	4LS3	X			
	LO	6LS2	X			

TARIFF BRANCH
RECEIVED
7/17/2006
PUBLIC SERVICE
COMMISSION
OF KENTUCKY

INTRASTATE ACCESS SERVICES TARIFF

15. Access Service Interfaces and Transmission Specifications (Cont'd)

15.1 Switched Access Service (Cont'd)

15.1.1 Local Transport Interface Groups (Cont'd)

(F) Available Premises Interface Codes (Cont'd)

Interface Group	Telephone Company Switch Supervisory Signaling	Premises Interface Code	Feature Group A	B	C	D
2 (Cont'd)	GO	4GS2	X			
	GO	4GS3	X			
	GO	6GS2	X			
	LO, GO	4DX2	X			
	LO, GO	4DX3	X			
	LO, GO	6EA2-E	X			
	LO, GO	6EA2-M	X			
	LO, GO	8EB2-E	X			
	LO, GO	8EB2-M	X			
	LO, GO	6EX2-B	X			
	RV, EA, EB, EC	4SF2		X	X	X
	RV, EA, EB, EC	4SF3		X		
	RV, EA, EB, EC	4DX2		X	X	X
	RV, EA, EB, EC	4DX3		X		
	RV, EA, EB, EC	6DX2			X	
	RV, EA, EB, EC	6EA2-E		X	X	X
	RV, EA, EB, EC	6EA2-M	X	X	X	
	RV, EA, EB, EC	8EB2-E		X	X	X
	RV, EA, EB, EC	8EB2-M		X	X	X
	EA, EB, EC	8EC2-M			X	X
	RV	4RV2-O		X	X	X
	RV	4RV2-T		X	X	X
	RV	4RV3-O		X	X	
	RV	4RV3-T		X	X	
	SS7	4NO2			X	X
3	LO, GO	4AH5-B	X			
	RV, EA, EB, EC	4AH5-B		X	X	X
	SS7	4AH5-B			X	X
4	LO, GO	4AH6-C	X			
	RV, EA, EB, EC	4AH6-C		X	X	X
	SS7	4AH6-C			X	X
5	LO, GO	4AH6-D	X			
	RV, EA, EB, EC	4AH6-D		X	X	X
	SS7	4AH6-D			X	X

TARIFF BRANCH
RECEIVED
7/17/2006
PUBLIC SERVICE
COMMISSION
OF KENTUCKY

INTRASTATE ACCESS SERVICES TARIFF

15. Access Service Interfaces and Transmission Specifications (Cont'd)

15.1 Switched Access Service (Cont'd)

15.1.1 Local Transport Interface Groups (Cont'd)

(F) Available Premises Interface Codes (Cont'd)

Interface Group	Telephone Company Switch Supervisory Signaling	Premises Interface Code	Feature Group A	B	C	D
6	LO, GO	4DS9-15	X			
	LO, GO	4DS9-15L	X			
	RV, EA, EB, EC	4DS9-15		X	X	X
	RV, EA, EB, EC	4DS9-15L		X	X	X
	SS7	4DS9-15			X	X
7	LO, GO	4DS9-31	X			
	LO, GO	4DS9-31L	X			
	RV, EA, EB, EC	4DS9-31		X	X	X
	RV, EA, EB, EC	4DS9-31L		X	X	X
	SS7	4DS9-31			X	X
8	LO, GO	4DS0-63	X			
	LO, GO	4DS0-63L	X			
	RV, EA, EB, EC	4DS0-63		X	X	X
	RV, EA, EB, EC	4DS0-63L		X	X	X
	SS7	4DS0-63			X	X
9	LO, GO	4DS6-44	X			
	LO, GO	4DS6-44	X			
	RV, EA, EB, EC	4DS6-44		X	X	X
	RV, EA, EB, EC	4DS6-44L		X	X	X
	SS7	4DS6-44			X	X
10	LO, GO	4DS6-27	X			
	LO, GO	4DS6-27L	X			
	RV, EA, EB, EC	4DS6-27		X	X	X
	RV, EA, EB, EC	4DS6-27L		X	X	X
	SS7	4DS6-27			X	X

TARIFF BRANCH
RECEIVED
7/17/2006
PUBLIC SERVICE
COMMISSION
OF KENTUCKY

INTRASTATE ACCESS SERVICES TARIFF

15. Access Service Interfaces and Transmission Specifications (Cont'd)

15.1 Switched Access Service (Cont'd)

15.1.2 Standard Transmission Specifications

Descriptions of the transmission specifications available with each Feature Group as a function of the Interface Group selected by the customer, are set forth in (A) through (D) following. Descriptions of each of the these Standard Transmission Specifications and the two Data Transmission Parameters mentioned are set forth respectively in (E) through (G) and 15.1.3(A) and (B) following:

(A) Feature Group A

FGA is provided with either Type B or Type C Transmission Specifications. The specifications for the associated parameters are guaranteed to the first point of switching. Type C Transmission Specifications are provided with Interface Group 1 and Type B is provided with Interface Groups 2 through 10. Type DB Data Transmission Parameters are provided with FGA to the first point of switching.

(B) Feature Group B

FGB is provided with either Type B or Type C Transmission Specifications. The specifications for the associated parameters are guaranteed to the end office when routed directly or to the first point of switching when routed via an access tandem. Type C Transmission Specifications are provided with Interface Group 1 and Type B is provided with Interface Groups 2 through 10. Type DB Data Transmission Parameters are provided with FGB to the first point of switching.

TARIFF BRANCH
RECEIVED
7/17/2006
PUBLIC SERVICE
COMMISSION
OF KENTUCKY

INTRASTATE ACCESS SERVICES TARIFF

15. Access Service Interfaces and Transmission Specifications (Cont'd)

15.1 Switched Access Service (Cont'd)

15.1.2 Standard Transmission Specifications (Cont'd)

(C) Feature Group C

FGC is provided with either Type B or Type C Transmission Specifications as follows:

- When routed directly to the end office either Type B or Type C is provided.
- When routed to an access tandem only Type B is provided.
- Type B or Type C is provided on the transmission path from the access tandem to the end office.

Type C Transmission Specifications are provided with Interface Group 1 when routed directly to an end office. Type B is provided with Interface Groups 2 through 10, whether routed directly to an end office or to an access tandem.

Type DB Data Transmission Parameters are provided with FGC for the transmission path between the customer designated premises and the end office when directly routed to the end office, and between the customer designated premises and the access tandem and between the access tandem and the end office when routed via an access tandem.

(D) Feature Group D

FGD is provided with either Type A, Type B or Type C Transmission Specifications as follows:

- When routed to the end office either Type B or C is provided.
- When routed to an access tandem only Type A is provided.
- Type A is provided on the transmission path from the access tandem to the end office.

Type C Transmission Specifications are provided with Interface Group 1. Type A and Type B Transmission Specifications are provided with Interface Groups 2 through 10.

Type DB Data Transmission Parameters are provided with FGD for the transmission path between the customer designated premises and the end office when directly routed to the end office. Type DA Data Transmission Parameters are provided for the transmission path between the customer designated premises and the access tandem and between the access tandem and the end office when routed via an access tandem.

TARIFF BRANCH
RECEIVED
7/17/2006
PUBLIC SERVICE
COMMISSION
OF KENTUCKY

INTRASTATE ACCESS SERVICES TARIFF

15. Access Service Interfaces and Transmission Specifications (Cont'd)

15.1 Switched Access Service (Cont'd)

15.1.2 Standard Transmission Specifications (Cont'd)

(E) Type A Transmission Specifications

Type A Transmission Specifications is provided with the following parameters:

(1) Loss Deviation

The maximum Loss Deviation of the 1004 Hz loss relative to the Expected Measured Loss (EML) is ± 2.0 dB

(2) Attenuation Distortion

The maximum Attenuation Distortion in the 404 to 2804 Hz frequency band relative to the loss at 1004 Hz is -1.0 dB to +3.0 dB.

(3) C-Message Noise

The maximum C-Message Noise for the transmission path at the route miles listed is less than or equal to:

Route Miles	C-Message Noise
less than 50	32 dBrnCO
51 to 100	34 dBrnCO
101 to 200	37 dBrnCO
201 to 400	40 dBrnCO
401 to 1000	42 dBrnCO

(4) C-Notch Noise

The maximum C-Notch Noise, utilizing a -16 dBmO holding tone, is less than or equal to 45 dBrnCO.

TARIFF BRANCH
RECEIVED
7/17/2006
PUBLIC SERVICE
COMMISSION
OF KENTUCKY

INTRASTATE ACCESS SERVICES TARIFF

15. Access Service Interfaces and Transmission Specifications (Cont'd)

15.1 Switched Access Service (Cont'd)

15.1.2 Standard Transmission Specifications (Cont'd)

(E) Type A Transmission Specifications (Cont'd)

(5) Echo Control

Echo Control, identified as Equal Level Echo Path Loss, and expressed as Echo Return Loss and Singing Return Loss, is dependent on the routing, i.e., whether the service is routed directly from the customer's point of termination (POT) to the end office or via an access tandem. It is equal to or greater than the following:

	Echo Return Loss	Singing Return Loss
POT to Access Tandem	21 dB	14
POT to End Office		
- Direct	N/A	N/A
- Via Access Tandem	16 dB	11 dB

(6) Standard Return Loss

Standard Return Loss expressed as Echo Return Loss and Singing Return Loss on two-wire ports of a four-wire point of termination shall be equal to or greater than:

Echo Return Loss	Singing Return Loss
5 dB	2.5 dB

TARIFF BRANCH
RECEIVED
7/17/2006
PUBLIC SERVICE
COMMISSION
OF KENTUCKY

INTRASTATE ACCESS SERVICES TARIFF

15. Access Service Interfaces and Transmission Specifications (Cont'd)

15.1 Switched Access Service (Cont'd)

15.1.2 Standard Transmission Specifications (Cont'd)

(F) Type B Transmission Specifications

Type B Transmission Specifications are provided with the following parameters:

(1) Loss Deviation

The maximum Loss Deviation of the 1004 Hz loss relative to the Expected Measured Loss (EML) is ± 2.5 dB.

(2) Attenuation Distortion

The maximum Attenuation Distortion in the 404 to 2804 Hz frequency band relative to loss at 1004 Hz is -2.0 dB to +4.0 dB.

(3) C-Message Noise

The maximum C-Message Noise for the transmission path at the route miles listed is less than or equal to:

	C-Message Noise*	
Route Miles	Type B1	Type B2
less than 50	32 dBrnCO	35 dBrnCO
51 to 100	33 dBrnCO	37 dBrnCO
101 to 200	35 dBrnCO	40 dBrnCO
201 to 400	37 dBrnCO	43 dBrnCO
401 to 1000	39 dBrnCO	45 dBrnCO

(4) C-Notch Noise

The maximum C-Notch Noise, utilizing a -16 dBm0 holding tone is less than or equal to 47 dBrnCO.

* For Feature Groups C and D only Type B2 will be provided. For Feature Groups A and B, Type B1 or B2 will be provided as set forth in Technical Reference GR-334-CORE.

TARIFF BRANCH
RECEIVED
7/17/2006
PUBLIC SERVICE
COMMISSION
OF KENTUCKY

INTRASTATE ACCESS SERVICES TARIFF

15. Access Service Interfaces and Transmission Specifications (Cont'd)

15.1 Switched Access Service (Cont'd)

15.1.2 Standard Transmission Specifications (Cont'd)

(F) Type B Transmission Specifications (Cont'd)

(5) Echo Control

Echo Control, identified as Impedance Balance for FGA and FGB and Equal Level Echo Path Loss for FGC and FGD, and expressed as Echo Return Loss (ERL) and Singing Return Loss (SRL), is dependent on the routing, i.e., whether the service is routed directly from the customer's point of termination (POT) to the end office or via an access tandem. The ERL and SRL also differ by Feature Group, type of termination, and type of transmission path. They are greater than or equal to the following:

	Echo Return Loss	Singing Return Loss
POT to Access Tandem		
-Terminated in 4-Wire trunk	21 dB	14 dB
-Terminated in 2-Wire trunk	16 dB	11 dB
POT to End Office		
-Direct	16 dB	11 dB
-Via Access Tandem		
. For FGB access	8 dB	4 dB
. For FGC access (Effective 4-Wire transmission path at end office)	16 dB	11 dB
. For FGC access (Effective 2-Wire transmission path at end office)	13 dB	6 dB

TARIFF BRANCH
RECEIVED
7/17/2006
PUBLIC SERVICE
COMMISSION
OF KENTUCKY

INTRASTATE ACCESS SERVICES TARIFF

15. Access Service Interfaces and Transmission Specifications (Cont'd)

15.1 Switched Access Service (Cont'd)

15.1.2 Standard Transmission Specifications (Cont'd)

(F) Type B Transmission Specifications (Cont'd)

(6) Standard Return Loss

Standard Return Loss, expressed as Echo Return Loss and Singing Return Loss, on two-wire ports of a four-wire point of termination shall be equal to or greater than:

Echo Return Loss	Singing Return Loss
5 dB	2.5 dB

(G) Type C Transmission Specifications

Type C Transmission Specifications are provided with the following parameters:

(1) Loss Deviation

The maximum Loss Deviation of the 1004 Hz loss relative to the Expected Measured Loss (EML) is ± 3.0 dB.

(2) Attenuation Distortion

The maximum Attenuation Distortion in the 404 to 2804 Hz frequency band relative to loss at 1004 Hz is -2.0 dB to + 5.5 dB.

TARIFF BRANCH
RECEIVED
7/17/2006
PUBLIC SERVICE
COMMISSION
OF KENTUCKY

INTRASTATE ACCESS SERVICES TARIFF

15. Access Service Interfaces and Transmission Specifications (Cont'd)

15.1 Switched Access Service (Cont'd)

15.1.2 Standard Transmission Specifications (Cont'd)

(G) Type C Transmission Specifications (Cont'd)

(3) C-Message Noise

The maximum C-Message Noise for the transmission path at the route miles listed is less than or equal to:

	C-Message Noise*	
Route Miles	Type C1	Type C2
less than 50	32 dBrnCO	38 dBrnCO
51 to 100	33 dBrnCO	39 dBrnCO
101 to 200	35 dBrnCO	41 dBrnCO
201 to 400	37 dBrnCO	43 dBrnCO
401 to 1000	39 dBrnCO	45 dBrnCO

(4) C-Notch Noise

The maximum C-Notch Noise, utilizing a -16 dBm0 holding tone is less than or equal to 47 dBrnCO.

* For Feature Groups C and D only Type C2 will be provided. For Feature Groups A and B, Type C1 or C2 will be provided as set forth in Technical Reference GR-334-CORE.

TARIFF BRANCH
RECEIVED
7/17/2006
PUBLIC SERVICE
COMMISSION
OF KENTUCKY

INTRASTATE ACCESS SERVICES TARIFF

15. Access Service Interfaces and Transmission Specifications (Cont'd)

15.1 Switched Access Service (Cont'd)

15.1.2 Standard Transmission Specifications (Cont'd)

(G) Type C Transmission Specifications (Cont'd)

(5) Echo Control

Echo Control, identified as Return Loss and expressed as Echo Return Loss and Singing Return Loss is dependent on the routing, i.e., whether the service is routed directly from the customer's point of termination (POT) to the end office or via an access tandem. It is equal to or greater than the following:

	Echo Return Loss	Singing Return Loss
POT to Access Tandem	13 dB	6 dB
POT to End Office		
- Direct	13 dB	6 dB
- Via Access Tandem (for FGB only)	8 dB	4 dB

15.1.3 Data Transmission Parameters

Two types of Data Transmission Parameters, i.e., Type DA and Type DB, are provided for the Feature Group arrangements. Type DB is provided with Feature Groups A, B and C and also with Feature Group D when Feature Group D is directly routed to the end office. Type DA is only provided with Feature Group D and only when routed via an access tandem. Following are descriptions of each.

(A) Data Transmission Parameters Type DA

(1) Signal to C-Notched Noise Ratio

The Signal to C-Notched Noise Ratio is equal to or greater than 33 dB.

TARIFF BRANCH
RECEIVED
7/17/2006
PUBLIC SERVICE
COMMISSION
OF KENTUCKY

INTRASTATE ACCESS SERVICES TARIFF

15. Access Service Interfaces and Transmission Specifications (Cont'd)

15.1 Switched Access Service (Cont'd)

15.1.3 Data Transmission Parameters(Cont'd)

(A) Data Transmission Parameters Type DA (Cont'd)

(2) Envelope Delay Distortion

The maximum Envelope Delay Distortion for the frequency bands and route miles specified is:

604 to 2804 Hz	
less than 50 route miles	500 microseconds
equal to or greater than 50 route miles	900 microseconds

1004 to 2404 Hz	
less than 50 route miles	200 microseconds
equal to or greater than 50 route miles	400 microseconds

(3) Impulse Noise Counts

The Impulse Noise Counts exceeding a 65 dBrnCO threshold in 15 minutes is no more than 15 counts.

(4) Intermodulation Distortion

The Second Order (R2) and Third Order (R3) Intermodulation Distortion products are equal to or greater than:

Second Order (R2)	33 dB
Third Order (R3)	37 dB

TARIFF BRANCH
RECEIVED
7/17/2006
PUBLIC SERVICE
COMMISSION
OF KENTUCKY

INTRASTATE ACCESS SERVICES TARIFF

15. Access Service Interfaces and Transmission Specifications (Cont'd)

15.1 Switched Access Service (Cont'd)

15.1.3 Data Transmission Parameters(Cont'd)

(A) Data Transmission Parameters Type DA (Cont'd)

(5) Phase Jitter

The Phase Jitter over the 4-300 Hz frequency band is less than or equal to 5o peak-to-peak.

(6) Frequency Shift

The maximum Frequency Shift does not exceed -2 to +2 Hz.

(B) Data Transmission Parameters Type DB

(1) Signal to C-Notched Noise Ratio

The Signal to C-Notched Noise Ratio is equal to or greater than 30 dB.

(2) Envelope Delay Distortion

The maximum Envelope Delay Distortion for the frequency bands and route miles specified is:

604 to 2804 Hz	
less than 50 route miles	800 microseconds
equal to or greater than 50 route miles	1000 microseconds

1004 to 2404 Hz	
less than 50 route mile	320 microseconds
equal to or greater than 50 route miles	500 microseconds

TARIFF BRANCH
RECEIVED
7/17/2006
PUBLIC SERVICE
COMMISSION
OF KENTUCKY

INTRASTATE ACCESS SERVICES TARIFF

15. Access Service Interfaces and Transmission Specifications (Cont'd)

15.1 Switched Access Service (Cont'd)

15.1.3 Data Transmission Parameters(Cont'd)

(B) Data Transmission Parameters Type DB (Cont'd)

(3) Impulse Noise Counts

The Impulse Noise Counts exceeding a 67 dBrnCO threshold in 15 minutes is no more than 15 counts.

(4) Intermodulation Distortion

The Second Order (R2) and Third Order (R3) Intermodulation Distortion products are equal to or greater than:

Second Order (R2)	31 dB
Third Order (R3)	34 dB

(5) Phase Jitter

The Phase Jitter over the 4-300 Hz frequency band is less than or equal to 7o peak-to-peak.

(6) Frequency Shift

The maximum Frequency Shift does not exceed -2 to +2 Hz.

TARIFF BRANCH
RECEIVED
7/17/2006
PUBLIC SERVICE
COMMISSION
OF KENTUCKY

INTRASTATE ACCESS SERVICES TARIFF

15. Access Service Interfaces and Transmission Specifications (Cont'd)

15.2 Special Access Service

This section explains and lists the codes that the customer must specify when ordering Special Access Service, Switched Access Entrance Facilities, and Voice Grade and High Capacity Direct Trunked Transport. These codes provide a standardized means to relate the services being ordered to Special Access Service offerings contained in Section 7. preceding.

When ordering, the type of Special Access Service or Switched Access Entrance Facility or Direct Trunked Transport is described by two code sets, the Network Channel (NC) code and the Network Channel Interface (NCI) codes.

The Network Channel (NC) code consists of two elements. Element one is a Channel Service Code (character positions 1 and 2) that describes the channel service type in an abbreviated form. Element two is an Optional Feature Code (character positions 3 and 4) that identifies option codes available for each channel service code, such as C-conditioning or Improved Return Loss.

The Network Channel Interface (NCI) is used to identify interface specifications associated with a particular channel. This code describes the total wires, protocol, impedance, protocol options and transmission level point(s) reflecting physical and electrical characteristics between the Telephone Company and the customer.

On the following 3 pages are examples which explain the specific characters of the codes and which reference matrices and charts used in developing the codes. Included in the matrices are Service Designator (SD) codes which are used to identify variations of service within service types (e.g., TG1 = Telegraph). The SD and NC codes are displayed as components of the matrices designated as Technical Specifications packages in (A) through (G) following. Through the use of these matrices, SD codes may be converted to NC codes for service ordering purposes.

A chart is also provided in 15.2.2(A) following which contains information necessary to develop NCI codes.

TARIFF BRANCH
RECEIVED
7/17/2006
PUBLIC SERVICE
COMMISSION
OF KENTUCKY

INTRASTATE ACCESS SERVICES TARIFF

15. Access Service Interfaces and Transmission Specifications (Cont'd)

15.2 Special Access Service (Cont'd)

Comprehensive lists of allowed Network Channel (NC) and Network Channel Interface (NCI) codes are contained in Special Report SR-STS-000307. However, not all services contained in this Special Report may be offered by the Telephone Company at this time.

Lastly, 15.2.2(C) following provides a list of compatible Network Channel Interfaces inasmuch as the Network Channel Interfaces associated with a given service need not always be the same, but all must be compatible.

Example No. 1: If the customer wishes to order a 4-wire voice grade circuit with 600 Ohms impedance, capable of data transmission, and with improved return loss, the customer might specify the following:

NC	NCI	SECNCI
LG-R	04DB2	04DA2-S

NC Code:
- LG = Voice Grade Channel Service, VG6
- -R = Improved Return Loss

NCI Code:
- 04 = Number of physical wires at CDP
- DB = Data stream in VF frequency band at the customer designated main terminal location
- 2 = 600 Ohms impedance

SECNCI (Secondary NCI Code):
- 04 = Number of physical wires at CDP
- DA = Data stream in VG frequency at the customer designated secondary terminal location
- 2 = 600 Ohms impedance
- S = Sealing current option for 4-wire transmission

In the above example the NCI (Network Channel Interface) code is the interface requested at the customer's POT (Point of Termination) and the SECNCI (Secondary Network Channel Interface) code represents the interface at the end office serving the End User.

TARIFF BRANCH
RECEIVED
7/17/2006
PUBLIC SERVICE
COMMISSION
OF KENTUCKY

INTRASTATE ACCESS SERVICES TARIFF

15. Access Service Interfaces and Transmission Specifications (Cont'd)

15.2 Special Access Service (Cont'd)

Example No. 2: If the customer wishes to order a FX circuit to a station, with 600 Ohms impedance, loop start signaling, which is 4-wire at the CDP and 2-wire at the end-user, the customer might specify:

NC	NCI	SECNCI
LC--	04LO2	02LS2

NC Code:
LC = Voice Grade Channel Service, VG2
-- = No Optional Features

NCI Code:
04 = Number of physical wires at CDP
LO = Loop start, loop signaling - open end
2 = 600 Ohms impedance

SECNCI (Secondary NCI Code):
02 = Number of physical wires at CDP
LS = Loop start signaling - closed end
2 = 600 Ohms impedance

Example No. 3: If the customer wishes to order a 1.544 Mbps Hi-cap facility with no channel options such as CO multiplexing, the customer might specify the following:

NC	NCI	SECNCI
HC--	04DS9-15	04DS9-15

NC Code:
HC = High Capacity Channel Service, HC1
-- = No Optional Features

NCI, SECNCI Code:
04 = Number of physical wires at CDP
DS = Digital hierarchy interface
9 = 100 Ohms impedance
15 = 1.544 Mbps (DS1) format

The preceding three examples use information contained in Special Report SR-STS-000307.

TARIFF BRANCH
RECEIVED
7/17/2006
PUBLIC SERVICE
COMMISSION
OF KENTUCKY

15. Access Service Interfaces and Transmission Specifications (Cont'd)

15.2 Special Access Service (Cont'd)

15.2.1 Network Channel (NC) Codes

In order to determine the NC code appropriate for the service to be ordered, the type of Special Access Service the customer wishes must be identified. This identification is accomplished by a Service Designator (SD) code. The broad categories of Service Designator codes (e.g., VG, MT, TG, etc.) are set forth in Section 7. preceding. Variations within service type (e.g., VG1, MTC, TG2, etc.) are described in the various Technical Publications cited in (A) through (G) following.

Having determined the specific service type to be ordered and its SD code, and having used the appropriate Technical Publication, the customer should match the SD code to the NC code using the following matrices. Once the NC code has been determined, the Network Channel Interface (NCI) code may be developed using the information set forth in 15.2.2 following and the guidelines concerning specific parameters available for each service type as set forth in the specified Technical Publication.

(A) Technical Specifications Packages Metallic Service

	Package			
SD Code	MTC*	MT1	MT2	MT3
NC Code	MQ	NT	NU	NV
Parameter				
DC Resistance Between Conductors	X	X	X	
Loop Resistance	X			X
Shunt Capacitance	X			X
Optional Features and Functions				
Three Premises Bridging	X	X		X
Series Bridging	X		X	

The technical specifications are described in Technical Reference TR-NPL-000336.

* All parameters are available within ranges selected by the customer where technically feasible.

TARIFF BRANCH
RECEIVED
7/17/2006
PUBLIC SERVICE
COMMISSION
OF KENTUCKY

INTRASTATE ACCESS SERVICES TARIFF

15. Access Service Interfaces and Transmission Specifications (Cont'd)

15.2 Special Access Service (Cont'd)

15.2.1 Network Channel (NC) Codes (Cont'd)

(B) Technical Specifications Packages Telegraph Grade Service

	Package		
SD Code	TGC*	TG1	TG2
NC Code	NQ	NW	NY
Parameter			
Telegraph Distortion	X	X	X
Optional Features and Functions			
Telegraph Bridging	X	X	X

The technical specifications are described in Technical Reference TR-NPL-000336.

* All parameters are available within ranges selected by the customer where technically feasible.

TARIFF BRANCH
RECEIVED
7/17/2006
PUBLIC SERVICE
COMMISSION
OF KENTUCKY

15. Access Service Interfaces and Transmission Specifications (Cont'd)

15.2 Special Access Service (Cont'd)

15.2.1 Network Channel (NC) Codes (Cont'd)

(C) Technical Specifications Packages Voice Grade Service

	Package VG													
SD Code	C*	1	2	3	4	5	6	7	8	9	10	11	12	W
NC Code	LQ	LB	LC	LD	LE	LF	LG	LH	LJ	LK	LN	LP	LR	SE
Parameter														
Attenuation Distortion	X	X	X	X	X	X	X	X	X	X	X	X	X	X
C-Message Noise	X	X	X	X	X	X	X	X	X	X	X	X	X	X
Echo Control	X	X	X	X		X		X	X	X		X	X	X
Envelope Delay Distortion	X						X	X	X	X	X	X	X	X
Frequency Shift	X						X	X	X	X	X	X	X	X
Impulse Noise	X					X	X	X	X	X	X	X	X	X
Intermodulation Distortion	X						X	X	X	X	X	X	X	X
Loss Deviation	X	X	X	X	X	X	X	X	X	X	X	X	X	X
Phase Hits, Gain Hits, and Dropouts	X						X	X	X	X	X	X	X	X
Phase Jitter	X						X	X	X	X	X	X	X	X
Signal-to-C Message Noise					X									
Signal-to-C Notch Noise	X					X	X	X	X	X	X	X	X	X

The technical specifications for these parameters (except for dropouts, phase hits, and gain hits) are described in Technical References GR-334-CORE and TR-TSY-000335. The technical specifications for dropouts, phase hits, and gain hits are described in Technical Reference PUB 41004, Table 4.

* The desired parameters are selected by the customer from the list of available parameters.

TARIFF BRANCH
RECEIVED
7/17/2006
PUBLIC SERVICE
COMMISSION
OF KENTUCKY

15. Access Service Interfaces and Transmission Specifications (Cont'd)

15.2 Special Access Service (Cont'd)

15.2.1 Network Channel (NC) Codes (Cont'd)

(C) Technical Specifications Packages Voice Grade Service (Cont'd)

	Package VG													
SD Code	C*	1	2	3	4	5	6	7	8	9	10	11	12	W
NC Code	LQ	LB	LC	LD	LE	LF	LG	LH	LJ	LK	LN	LP	LR	SE
Optional Features and Functions														
Central Office Bridging Capability	X		X			X	X				X	X	X	
Central Office Multiplexing	X						X							
Conditioning:														
. C-Type	X					X	X	X	X	X	X			
. Improved Attenuation Distortion	X					X	X	X	X	X	X			
. Improved Envelope Delay Distortion	X					X	X	X	X	X	X			
. Sealing Current	X						X							
. Data Capability	X						X	X			X			
. Telephoto Capability	X											X		
Customer Specified Premises Receive Level	X		X	X				X	X	X				
Improved Return Loss For Effective Four-Wire Transmission	X	X	X	X	X	X	X	X	X	X	X	X	X	
For Effective Two-Wire Transmission	X		X	X				X						
Improved Two-Wire Voice Transmission														X
PPSN Interface Arrangement	X									X				
Selective Signaling Arrangement	X		X			X	X				X	X	X	
Signaling Capability	X	X	X	X				X	X	X				
Transfer Arrangement	X	X	X	X	X	X	X	X	X	X	X	X	X	

TARIFF BRANCH
RECEIVED
7/17/2006
PUBLIC SERVICE COMMISSION OF KENTUCKY

INTRASTATE ACCESS SERVICES TARIFF

15. Access Service Interfaces and Transmission Specifications (Cont'd)

15.2 Special Access Service (Cont'd)

15.2.1 Network Channel (NC) Codes (Cont'd)

(C) Technical Specifications Packages Voice Grade Service (Cont'd)

	Package				
SD Code	APC*	AP1	AP2	AP3	AP4
NC Code	PQ	PE	PF	PJ	PK
Parameter					
Actual Measured Loss	X	X	X	X	X
Amplitude Tracking	X				
Crosstalk	X	X	X	X	X
Distortion Tracking	X				
Gain/Frequency Distortion	X	X	X	X	X
Group Delay	X				
Noise	X	X	X	X	X
Phrase Tracking	X				
Short-Term Gain Stability	X				
Short-Term Loss	X				
Total Distortion	X	X	X	X	X
Optional Features and Functions					
Central Office Bridging Capability	X	X	X	X	X
Gain Conditioning	X	X	X	X	X
Stereo	X			X	

The technical specifications are described in Technical Reference TR-NPL-000337 and associated Addendum.

* The desired parameters are selected by the customer from the list of available parameters.

TARIFF BRANCH
RECEIVED
7/17/2006
PUBLIC SERVICE
COMMISSION
OF KENTUCKY

INTRASTATE ACCESS SERVICES TARIFF

15. Access Service Interfaces and Transmission Specifications (Cont'd)

15.2 Special Access Service (Cont'd)

15.2.1 Network Channel (NC) Codes (Cont'd)

(E) Technical Specifications Packages Video Service

		Package		
SD Code		TVC*	TV1	TV2
NC Code		TQ	TV	TW
Video Parameters				
Insertion Gain		X	X	X
Field-Time Distortion		X	X	X
Line-Time Distortion		X	X	X
Short-Time Distortion	X	X	X	
Chrominance-Luminance Gain Inequality		X	X	X
Chrominance-Luminance Delay Inequality		X	X	X
Amplitude/Frequency Characteristic		X	X	X
Luminance Non-Linear Distortion		X	X	X
Chrominance Non-Linear Gain Distortion		X	X	X
Chrominance Non-Linear Phase Distortion		X	X	X
Transient Synchronizing Signal Non-Linearity		X	X	X
Dynamic Gain Distortion				
- Picture Signal		X	X	X
- Synchronizing Signal		X	X	X
Differential Gain		X	X	X
Differential Phase		X	X	X
Chrominance-Luminance Intermodulation		X	X	X

* The desired parameters are selected by the customer from the list of available parameters.

TARIFF BRANCH
RECEIVED
7/17/2006
PUBLIC SERVICE
COMMISSION
OF KENTUCKY

INTRASTATE ACCESS SERVICES TARIFF

15. Access Service Interfaces and Transmission Specifications (Cont'd)

15.2 Special Access Service (Cont'd)

15.2.1 Network Channel (NC) Codes (Cont'd)

(E) Technical Specifications Packages Video Service (Cont'd)

	Package		
SD Code	TVC*	TV1	TV2
NC Code	TQ	TV	TW
Audio Channel Parameters Associated with Video Service			
Insertion Gain	X	X	X
Amplitude/Frequency Characteristic	X	X	X
Total Harmonic Distortion & Noise	X	X	X
Maximum Steady-State Test Levels	X	X	X
Gain Differential Between Channels	X	X	
Phase Differential Between Channels		X	X
Crosstalk	X	X	X
Audio-To-Video Time Differential	X	X	X

The technical specifications are described in Technical Reference TR-NPL-000338.

* The desired parameters are selected by the customer from the list of available parameters.

TARIFF BRANCH
RECEIVED
7/17/2006
PUBLIC SERVICE
COMMISSION
OF KENTUCKY

INTRASTATE ACCESS SERVICES TARIFF

15. Access Service Interfaces and Transmission Specifications (Cont'd)

15.2 Special Access Service (Cont'd)

15.2.1 Network Channel (NC) Codes (Cont'd)

(F) Technical Specifications Packages Digital Data Service

	Package					
SD Code	D1	D2	D3	D4	D5	D6
NC Code	XA	XB	XG	XH	XE	YN
Parameter/Hubbed						
Error-Free Seconds	X	X	X	X	X	X
Optional Features and Functions/Hubbed						
Central Office Bridging Capability	X	X	X	X	X	X
PPSN Interface Transfer Arrangement	X	X	X	X	X	X
Transfer Arrangement	X	X	X	X	X	X

The Telephone Company will provide a channel capable of meeting a monthly average performance equal to or greater than 99.875% error-free seconds (if provided through a Digital Data hub) while the channel is in service, if it is measured through a CSU equivalent which is designed, manufactured, and maintained to conform with the specifications contained in Technical Reference TR-NPL-000341.

Optional Features and Functions/Non-Hubbed

Voltages which are compatible with Digital Data Service are delineated in Technical Reference TR-NWT-00341.

TARIFF BRANCH
RECEIVED
7/17/2006
PUBLIC SERVICE COMMISSION OF KENTUCKY

INTRASTATE ACCESS SERVICES TARIFF

15. Access Service Interfaces and Transmission Specifications (Cont'd)

15.2 Special Access Service (Cont'd)

15.2.1 Network Channel (NC) Codes (Cont'd)

(G) Technical Specifications Packages High Capacity Service

	Package					
SD Code	HC0	HC1	HC1C	HC2	HC3	HC4
NC Code	HS	HC	HD	HE	HF	HG
Parameters						
Error-Free Seconds		X				
Optional Features and Functions						
Automatic Loop Transfer			X			
Central Office Multiplexing:						
DS4 to DS1						X
DS3 to DS1					X	
DS2 to DS1				X		
DS1C to DS1			X			
DS1 to Voice		X				
DS1 to DS0		X				
DS0 to Subrate*	X					
Transfer Arrangement		X				
Clear Channel Capability		X				

A channel with technical specifications package HC1 will be capable of an error-free second performance of 98.75% over a continuous 24 hour period as measured at the 1.544 Mbps rate through a CSU equivalent which is designed, manufactured, and maintained to conform with the specifications contained in Technical Reference PUB 62411*Available only on a channel of 1.544 Mbps facility to a Telephone Company hub.

TARIFF BRANCH
RECEIVED
7/17/2006
PUBLIC SERVICE
COMMISSION
OF KENTUCKY

15. Access Service Interfaces and Transmission Specifications (Cont'd)

15.2 Special Access Service (Cont'd)

15.2.2 Network Channel Interface (NCI) Codes

The electrical interface with the Telephone Company for Special Access Services, is defined by an interface code. There are interface codes for both the customer designated premises and the point of termination. Three examples of NCI codes are found in 15.2 preceding.

(A) Parameter Codes and Options

Parameter

Code	Option	Definition
AB -		accepts 20 Hz ringing signal at customer's point of termination
AC -		accepts 20 Hz ringing signal at customer's end user's point of termination
AH -		analog high capacity interface
	B	60 kHz to 108 kHz (12 channels)
	C	312 kHz to 552 kHz (60 channels)
-	D	564 kHz to 3084 kHz (600 channels)
CT -		Centrex Tie Trunk Termination
CS -		digital hierarchy interface at Digital Cross Connect System (DCS)
-	15	1.544 Mbps (DS1) ANSI Extended Superframe (ESF) Format and B8ZS Clear Channel Capability
-	15A	1.544 Mbps (DS1) Superframe (SF) format
-	15B	1.544 Mbps (DS1) Superframe (SF) format and B8ZS Clear Channel Capability
-	15K	1.544 Mbps (DS1) Extended Superframe (ESF)
D -		data stream in VF frequency band at customer's end user's point of termination
DB -		data stream in VF frequency band at customer's point of termination
-	10	VF for TG1 and TG2
-	43	VF for 43 Telegraph Carrier type signals, TG1 and TG2
DC -		direct current or voltage
-	1	monitoring interface with series RC combination (McCulloh format)
-	2	Telephone Company energized alarm channel
-	3	Metallic facilities (DC continuity) for direct current/low frequency control signals or slow speed data (30 baud)
DD -		DATAPHONE Select-A-Station (and TABS) interface at customer's point of termination
DE -		DATAPHONE Select-A-Station (and TABS) interface at the customer's end user's point of termination

TARIFF BRANCH
RECEIVED
7/17/2006
PUBLIC SERVICE
COMMISSION
OF KENTUCKY

15. Access Service Interfaces and Transmission Specifications (Cont'd)

15.2 Special Access Service (Cont'd)

15.2.2 Network Channel Interface (NCI) Codes (Cont'd)

(A) Parameter Codes and Options (Cont'd)

Parameter (Cont'd)

Code	Option	Definition
DS -		digital hierarchy interface
-	15	1.544 Mbps (DS1) format per PUB 41451 plus D4
-	15E	8-bit PCM encoded in one 64 kbps of the DS1 signal
-	15F	8-bit PCM encoded in two 64 kbps of the DS1 signal
-	15G	8-bit PCM encoded in three 64 kbps of the DS1 signal
-	15H	14/11-bit PCM encoded in six 64 kbps of the DS1 signal
-	15J	1.544 Mbps format per PUB 62411
-	15K	1.544 Mbps format per PUB 62411 plus extended framing format
-	15L	1.544 Mbps (DS1) with SF signaling
-	27	274.176 Mbps (DS4)
-	27L	274.176 Mbps (DS4) with SF signaling
-	31	3.152 Mbps (DS1C)
-	31L	3.152 Mbps (DS1C) with SF signaling
-	44	44.736 Mbps (DS3)
-	44L	44.736 Mbps (DS3) with SF signaling
-	63	6.312 Mbps (DS2)
-	63L	6.312 Mbps (DS2) with SF signaling
DU -		digital access interface
-	24	2.4 kbps
-	48	4.8 kbps
-	19	19.2 Kbps
-	56	56.0 kbps
-	96	9.6 kbps
-	64	64.0 Kbps
-	A	1.544 Mbps format per PUB 62411
-	B	1.544 Mbps format per PUB 62411 plus D4
-	C	1.544 Mbps format per PUB 62411 plus extended framing format
-	1KN	1.544 Mbps ANSI Extended Superframe (ESF) Format without line power
-	1SN	1.544 Mbps ANSI Extended Superframe (ESF) Format with B8ZS Clear Channel Capability and without line power
-	AN	1.544 Mbps free-framing format without line power (only avail. to U.S. Govt. agencies)
-	BN	1.544 Mbps Superframe (SF) Format without line power
-	DN	1.544 Mbps Superframe (SF) Format with B8ZS Clear Channel Capability without line power
DX -		duplex signaling interface at customer's point of termination
DY -		duplex signaling interface at customer's end user's point of termination

TARIFF BRANCH
RECEIVED
7/17/2006
PUBLIC SERVICE
COMMISSION
OF KENTUCKY

INTRASTATE ACCESS SERVICES TARIFF

15. Access Service Interfaces and Transmission Specifications (Cont'd)

15.2 Special Access Service (Cont'd)

15.2.2 Network Channel Interface (NCI) Codes (Cont'd)

(A) Parameter Codes and Options (Cont'd)

Parameter (Cont'd)

Code	Option	Definition
EA -	E	Type I E&M Lead Signaling. Customer at POT or customer's end user at POT originates on E Lead.
EA -	M	Type I E&M Lead Signaling. Customer at POT or customer's end user at POT originates on M Lead.
EB -	E	Type II E&M Lead Signaling. Customer at POT or customer's end user at POT originates on E Lead.
EB -	M	Type II E&M Lead Signaling. Customer at POT or customer's end user at POT originates on M Lead.
EC -		Type III E&M signaling at customer POT
EX -	A	tandem channel unit signaling for loop start or ground start and customer supplies open end (dial tone, etc.) functions.
EX -	B	tandem channel unit signaling for loop start or ground start and customer supplies closed end (dial pulsing, etc.) functions.
GO -		ground start loop signaling - open end function by customer or customer's end user
GS -		ground start loop signaling - closed end function by customer or customer's end user
IA -		E.I.A. (25 pin RS-232)
LA -		end user loop start loop signaling - Type A OPS registered port open end
LB -		end user loop start loop signaling - Type B OPS registered port open end
LC -		end user loop start loop signaling - Type C OPS registered port open end
LO -		loop start loop signaling - open end function by customer or customer's end user
LR -		20 Hz automatic ringdown interface at customer with Telephone Company provided PLAR
LS -		loop start loop signaling - closed end function by customer or customer's end user
NO -		no signaling interface, transmission only

TARIFF BRANCH
RECEIVED
7/17/2006
PUBLIC SERVICE
COMMISSION
OF KENTUCKY

INTRASTATE ACCESS SERVICES TARIFF

15. Access Service Interfaces and Transmission Specifications (Cont'd)

15.2 Special Access Service (Cont'd)

15.2.2 Network Channel Interface (NCI) Codes (Cont'd)

(A) Parameter Codes and Options (Cont'd)

Parameter (Cont'd)

Code	Option	Definition
PG -		program transmission - no dc signaling
-	1	nominal frequency from 50 to 15000 Hz
-	3	nominal frequency from 200 to 3500 Hz
-	5	nominal frequency from 100 to 5000 Hz
-	8	nominal frequency from 50 to 8000 Hz
PR -		protective relaying*
RV -	O	reverse battery signaling, one way operation, originate by customer
-	T	reverse battery signaling, one way operation, terminate function by customer or customer's end user
SF -		single frequency signaling with VF band at either customer POT or customer's end user POT
TF -		telephotograph interface
TT -		telegraph/teletypewriter interface at either customer POT or customer's end user POT
-	2	20.0 milliamperes
-	3	3.0 milliamperes
-	6	62.5 milliamperes
TV -		television interface
-	1	combined (diplexed) video and one audio signal
-	2	combined (diplexed) video and two audio signals
-	5	video plus one (or two) audio 5 kHz signal(s) or one (or two) two wire
-	15	video plus one (or two) audio 15 kHz signal(s)

* Available only for the transmission of audio tone protective relaying signals used in the protection of electric power systems during fault conditions.

TARIFF BRANCH
RECEIVED
7/17/2006
PUBLIC SERVICE
COMMISSION
OF KENTUCKY

INTRASTATE ACCESS SERVICES TARIFF

15. Access Service Interfaces and Transmission Specifications (Cont'd)

15.2 Special Access Service (Cont'd)

15.2.2 Network Channel Interface (NCI) Codes (Cont'd)

(B) Impedance

The nominal reference impedance with which the channel will be terminated for the purpose of evaluating transmission performance:

Value (ohms)	Code(s)
110	0
150	1
600	2
900	3+
135	5
75	6
124	7
Variable	8
100	9

* For those interface codes with a 4-wire transmission path at the customer designated POT, rather than a standard 900 ohm impedance the code (3) denotes a customer provided transmission equipment termination. Such terminations were provided to customers in accordance with the F.C.C. Docket No. 20099 Settlement Agreement.

TARIFF BRANCH
RECEIVED
7/17/2006
PUBLIC SERVICE
COMMISSION
OF KENTUCKY

INTRASTATE ACCESS SERVICES TARIFF

15. Access Service Interfaces and Transmission Specifications (Cont'd)

15.2 Special Access Service (Cont'd)

15.2.2 Network Channel Interface (NCI) Codes (Cont'd)

(C) Compatible Network Channel Interfaces

The following tables show the Network Channel Interface codes (NCIs) which are compatible:

(1) Metallic

Compatible CIs

2DC8-1	2DC8-2
2DC8-3	2DC8-3
4DS8	2DC8-1
4DS8	2DC8-2

(2) Telegraph Grade

Compatible CIs		Compatible CIs	
2DB2-10	10IA8	4DB2-10	10IA8
	2TT2-2	2TT2-2	
	4TT2-2	4TT2-2	
2DB2-43*	10IA8	4DB2-43*	10IA8
	2TT2-2		2TT2-6
	2TT2-6		4TT2-2
	4TT2-2		
		4DS8-	10IA8
2TT2-2	2TT2-2		2TT2-2
			2TT2-6
2TT2-3	2TT2-2		4TT2-2
	4TT2-2		4TT2-6
2TT2-6	2TT2-6	4TT2-2	4TT2-2
	4TT2-6		
		4TT2-6	2TT2-6

* Supplemental Channel Assignment information required.

TARIFF BRANCH
RECEIVED
7/17/2006
PUBLIC SERVICE
COMMISSION
OF KENTUCKY

INTRASTATE ACCESS SERVICES TARIFF

15. Access Service Interfaces and Transmission Specifications (Cont'd)

15.2 Special Access Service (Cont'd)

15.2.2 Network Channel Interface (NCI) Codes (Cont'd)

(C) Compatible Network Channel Interfaces (Cont'd)

(3) Voice Grade

Compatible CIs		Compatible CIs		Compatible CIs	
2AB2	2AC2	2DB2	2DA2	2LR2	2LR2
2AB3	2AC2	2DB3	2DA2	2LR3	2LR2
2CT3	2DY2	2DX3	2LA2	2LS	2GS
	4DS8		2LB2		2LS
	4DX2		2LC2		4GS
	4DX3		2LO3		4LS
	4DY2		2LS2		
	4EA2-E		2LS3	2LS2	2LA2
	4EA2-M				2LB2
	4SF2	2GO2	2GS2		2LC2
	4SF3		2GS3		
	6DX2			2LS3	2LA2
	6DY2	2GO3	2GS2		2LB2
	6DY3		2GS3		2LC2
	6EA2-E				
	6EA2-M	2GS	2GS	2N02	2DA2
	6EB2-E		2LS		2N02
	6EB2-M		4GS		
	6EB3-E		4LS	2N03	2N02
	8EB2-E				2PR2
	8EB2-M	2L02	2LS2		
	8EC2		2LS3	2TF3	2TF2
	9DY2				
	9DY3	2L03	2LS2		
	9EA2		2LS3		
	9EA3				

TARIFF BRANCH
RECEIVED
7/17/2006
PUBLIC SERVICE
COMMISSION
OF KENTUCKY

15. Access Service Interfaces and Transmission Specifications (Cont'd)

15.2 Special Access Service (Cont'd)

15.2.2 Network Channel Interface (NCI) Codes (Cont'd)

(C) Compatible Network Channel Interfaces (Cont'd)
(3) Voice Grade (Cont'd)

Compatible CIs		Compatible CIs		Compatible CIs	
4AB2	2AC2				
	4AB2				
	4AC2				
	4SF2				
4AB3	2AC2				
	4AC2				
	4SF2				
4AC2	2AC2				
	4AC2				
		4DS8-	2AC2	4DS8-	4DG2
			2DA2		4LR2
			2DY2		4LS2
			2GO2		4NO2
4DA2	4DA2		2GO3		4PR2
			2GS2		4RV2-T
4DB2	2DA2		2GS3		4SF2
	2NO2		2LA2		4SF3
	2PR2		2LB2		4TF2
	4DA2		2LC2		6DA2
	4DB2		2LO2		6DY2
	4NO2		2LO3		6DY3
	4PR2		2LR2		6EA2-E
	6DA2		2LS2		6EA2-M
			2LS3		6EB2-E
4DD3	2DE2		2NO2		6EB2-M
	4DE2		2PR2		6GS2
			2RV2-T		6LS2
			2TF2		8EB2-E
			4AC2		8EB2-M
			4DA2		9DY2
			4DE2		9DY3
			4DX2		9EA2
			4DX3		9EA3
			4DY2		
			4EA2-E		
			4EA2-M		

TARIFF BRANCH
RECEIVED
7/17/2006
PUBLIC SERVICE
COMMISSION
OF KENTUCKY

INTRASTATE ACCESS SERVICES TARIFF

15. Access Service Interfaces and Transmission Specifications (Cont'd)

15.2 Special Access Service (Cont'd)

15.2.2 Network Channel Interface (NCI) Codes (Cont'd)

(C) Compatible Network Channel Interfaces (Cont'd)

(3) Voice Grade (Cont'd)

Compatible CIs		Compatible CIs		Compatible CIs	
4DX2	2DY2	4DX2	8EB2-E	4DX3	6DY2
	2LA2		8EB2-M		6DY3
	2LB2		9DY2		6EA2-E
	2LC2		9DY3		6EA2-M
	2LO3		9EA2		6EB2-E
	2LS2		9EA3		6EB2-M
	2LS3				6LS2
	2RV2-T	4DX3	2DY2		8EB2-E
	4DX2		2LA2		8EB2-M
	4DY2		2LB2		9DY2
	4EA2-E		2LC2		9DY3
	4EA2-M		2LO3		9EA2
	4LS2		2LS2		9EA3
	4RV2-T		2LS3		
	4SF2		2RV2-T	4DY2	2DY2
	4SF3		4DX2		4DY2
	6DY2		4DX3		
	6DY3		4DY2		
	6EA2-E		4EA2-E		
	6EA2-M		4EA2-M		
	6EB2-E		4LS2		
	6EB2-M		4RV2-T		
	6LS2		4SF2		
			4SF3		

TARIFF BRANCH
RECEIVED
7/17/2006
PUBLIC SERVICE
COMMISSION
OF KENTUCKY

INTRASTATE ACCESS SERVICES TARIFF

15. Access Service Interfaces and Transmission Specifications (Cont'd)

15.2 Special Access Service (Cont'd)

15.2.2 Network Channel Interface (NCI) Codes (Cont'd)

(C) Compatible Network Channel Interfaces (Cont'd)

(3) Voice Grade (Cont'd)

Compatible CIs		Compatible CIs		Compatible CIs	
4EA2-E	2DY2	4EA3-E	2DY2	4GO2	2GO2
	4DY2		4DY2		2GO3
	4EA2-E		4EA2-E		2GS2
	4EA2-M		4EA2-M		2GS3
	4SF2		4SF2		4GS2
	6DY2		6DY2		4SF2
	6DY3		6DY3		6GS2
	6EB2-E		6EA2-E		
	6EB2-M		6EA2-M	4GO3	2GO2
	8EB2-E		6EB2-E		2GS2
	8EB2-M		6EB2-M		2GS3
	9DY2		8EB2-E		4GS2
	9DY3		8EB2-M		4SF2
	9DY2		6GS2		
4EA2-M	2DY2		9DY3		
	4DY2		9EA2		
	4EA2-M		9EA3	4GS	2GS
	4SF2				2LS
	6DY2				4GS
	6DY3				4LS
	6EB2-E				
	6EB2-M				
	8EB2-E				
	8EB2-M				
	9DY2				
	9DY3				

TARIFF BRANCH
RECEIVED
7/17/2006
PUBLIC SERVICE
COMMISSION
OF KENTUCKY

INTRASTATE ACCESS SERVICES TARIFF

15. Access Service Interfaces and Transmission Specifications (Cont'd)

15.2 Special Access Service (Cont'd)

15.2.2 Network Channel Interface (NCI) Codes (Cont'd)

(C) Compatible Network Channel Interfaces (Cont'd)

(3) Voice Grade (Cont'd)

Compatible CIs		Compatible CIs		Compatible CIs	
4LO2	2LS2	4LS3	2LA2	4SF2	2LO3
	2LS3		2LB2		2LR2
	4LS2		2LC2		2LS2
	4SF2		2LO2		2LS3
	6LS2		2LO3		2RV2-T
			4SF2		4AC2
4LO3	2LS2				4DY2
	2LS3	4NO2	2DA2		4LS2
	4LS2		2DE2		4RV2-T
	4SF2		2NO2		4SF2
	6LS2		4DA2		6DY2
			4DE2		6DY3
4LR2	2LR2		4NO2		6GS2
	4LR2		6DA2		9DY2
	4SF2				9DY3
		4RV2-0	2RV2-T		
4LR3	2LR2		4RV2-T	4SF3	2DY2
	4LR2		4SF2		2GO3
	4SF2				2GS2
					2GS3
4LS	2GS	4SF2	2AC2		2LA2
	2LS		2DY2		2LB2
	4GS		2GS2		2LC2
	4LS		2GS3		2L03
			2LA2		2LR2
4LS2	2LA2		2LB2		
	2LB2		2LC2		
	2LC2				
	2LO2				
	2LO3				

TARIFF BRANCH
RECEIVED
7/17/2006
PUBLIC SERVICE
COMMISSION
OF KENTUCKY

INTRASTATE ACCESS SERVICES TARIFF

15. Access Service Interfaces and Transmission Specifications (Cont'd)

15.2 Special Access Service (Cont'd)

15.2.2 Network Channel Interface (NCI) Codes (Cont'd)

(C) Compatible Network Channel Interfaces (Cont'd)

(3) Voice Grade (Cont'd)

Compatible CIs		Compatible CIs		Compatible CIs	
4SF3	2LS2	6DA	4DA2	6DY3	2DY2
	2LS3		6DA2		4DY2
	2RV2-T				6DY2
	4DY2	6DX2	2DY2		6DY3
	4EA2-E		4DY2		
	4EA2-M		4EA2-E	6EA2-E	2AC2
	4GS2				
	4LR2		4EA2-M		2DY2
	4LS2		4SF2		2LA2
	4RV2-T		6DY2		2LB2
	4SF2		6DY3		2LC2
	4SF3		6EA2-E		2LO3
	6DY2		6EA2-M		2LS2
	6DY3		6EB2-E		2LS3
	6EB2-E		6EB2-M		2RV2-T
	6EB2-M		8EB2-E		4AC2
	6GS2		8EB2-M		4DY2
	6LS2		9DY2		4EA2-E
	9DY2		9DY3		4EA2-M
	9DY3		9EA2		4LS2
	9EA2		9EA3		4RV2-T
	9EA3				4SF2
		6DY2	2DY2		4SF3
4TF2	2TF2		4DY2		6DY2
	4TF2		6DY2		6DY3
					6EA2-E
					6EA2-M

TARIFF BRANCH
RECEIVED
7/17/2006
PUBLIC SERVICE
COMMISSION
OF KENTUCKY

INTRASTATE ACCESS SERVICES TARIFF

15. Access Service Interfaces and Transmission Specifications (Cont'd)

15.2 Special Access Service (Cont'd)

15.2.2 Network Channel Interface (NCI) Codes (Cont'd)

(C) Compatible Network Channel Interfaces (Cont'd)

(3) Voice Grade (Cont'd)

Compatible CIs		Compatible CIs		Compatible CIs	
6EA2-E	6EB2-E	6EA2-M	6DY2	6EB3-E	2DY2
	6EB2-M		6DY3		4DY2
	6LS2		6EA2-M		4EA2-E
	8EB2-E		6EB2-E		4EA2-M
	8EB2-M		6EB2-M		4SF2
	9DY2		6LS2		6DY2
	9DY3		8EB2-E		6DY3
			8EB2-M		6EA2-E
6EA2-M	2AC2		9DY2		6EA2-M
	2DY2		9DY3		8EB2-E
	2LA2				8EB2-M
	2LB2	6EB2-E	2DY2		9DY2
	2LC2		4DY2		9DY3
	2LO3		4SF2		9EA2
	2LS2		6DY2		9EA3
	2LS3		6DY3		
	2RV2-T		6EB2-E	6EX2-A	2GS2
	4AC2		6EB2-M		2GS3
	4DY2		9DY2		2LS2
	4EA2-E		9DY3		2LS3
	4EA2-M				4GS2
	4LS2	6EB2-M	2DY2		4LS2
	4RV2-T		4DY2		4SF2
	4SF2		4SF2		6GS2
	4SF3		6DY2		6LS2
			6DY3		
			6EB2-M		
			9DY2		
			9DY3		

TARIFF BRANCH
RECEIVED
7/17/2006
PUBLIC SERVICE
COMMISSION
OF KENTUCKY

INTRASTATE ACCESS SERVICES TARIFF

15. Access Service Interfaces and Transmission Specifications (Cont'd)

15.2 Special Access Service (Cont'd)

15.2.2 Network Channel Interface (NCI) Codes (Cont'd)

(C) Compatible Network Channel Interfaces (Cont'd)

(3) Voice Grade (Cont'd)

Compatible CIs		Compatible CIs		Compatible CIs	
6EX2-B	2GO3	8EB2-E	2AC2	8EB2-M	2AC2
	2LA2		2DY2		2DY2
	2LB2		2LA2		2LA2
	2LC2		2LB2		2LB2
	2LO2		2LC2		2LC2
	2LO3		2LO3		2LO3
	2LR2		2LS2		2LS2
	4LR2		2LS3		2LS3
	4SF2		2RV2-T		2RV2-T
			4AC2		4AC2
6GO2	2GO2		4DY2		4DY2
	2GS2		4LS2		4LS2
	2GS3		4RV2-T		4RV2-T
	4GS2		4SF2		4SF2
	4SF2		4SF3		4SF3
	6GS2		6DY2		6DY2
			6DY3		6DY3
6LO2	2LS2		6EB2-E		6EB2-E
	2LS3		6EB2-M		6EB2-M
	4LS2		6LS2		6LS2
	4SF2		8EB2-E		8EB2-M
	6LS2		8EB2-M		9DY2
			9DY2		9DY3
6LS2	2LA2		9DY3		
	2LB2				
	2LC2				
	2LO2				
	2LO3				
	4SF2				

TARIFF BRANCH
RECEIVED
7/17/2006
PUBLIC SERVICE
COMMISSION
OF KENTUCKY

INTRASTATE ACCESS SERVICES TARIFF

15. Access Service Interfaces and Transmission Specifications (Cont'd)

15.2 Special Access Service (Cont'd)

15.2.2 Network Channel Interface (NCI) Codes (Cont'd)

(C) Compatible Network Channel Interfaces (Cont'd)

(3) Voice Grade (Cont'd)

Compatible CIs		Compatible CIs		Compatible CIs	
8EC2	2DY2	9DY2	2DY2	9EA3	2DY2
	4DY2		4DY2		4DY2
	4EA2-E		6DY2		4EA2-E
	4EA2-M		6DY3		4EA2-M
	4SF2		9DY2		6DY2
	6DY2				6DY3
	6DY3	9DY3	2DY2		6EA2-E
	6EA2-E		4DY2		6EA2-M
	6EA2-M		6DY2		6EB2-E
	6EB2-E		6DY3		6EB2-M
	6EB2-M		9DY2		8EB2-E
	8EB2-E		9DY3		8EB2-M
	8EB2-M				9DY2
	9DY2	9EA2	2DY2		9DY3
	9DY3		4DY2		9EA3
	9EA2		4EA2-E		
	9EA3		4EA2-M		
			6DY2		
			6DY3		
			6EA2-E		
			6EA2-M		
			6EB2-E		
			6EB2-M		
			8EB2-E		
			8EB2-M		
			9DY2		
			9DY3		
			9EA2		
			9EA3		

TARIFF BRANCH
RECEIVED
7/17/2006
PUBLIC SERVICE
COMMISSION
OF KENTUCKY

INTRASTATE ACCESS SERVICES TARIFF

15. Access Service Interfaces and Transmission Specifications (Cont'd)

15.2 Special Access Service (Cont'd)

15.2.2 Network Channel Interface (NCI) Codes (Cont'd)

(C) Compatible Network Channel Interfaces (Cont'd)

(4) Program Audio

Compatible CIs		Compatible CIs	
2PG2-1	2PG1-1 2PG2-1	4DS8-15E	2PG1-3 2PG2-3
2PG2-3	2PG1-3 2PG2-3	4DS8-15F	2PG1-5 2PG2-5
2PG2-5	2PG1-5 2PG2-5	4DS8-15G	2PG1-8 2PG2-8
2PG2-8	2PG1-8 2PG2-8	4DA8-15H	2PG1-1 2PG2-1

TARIFF BRANCH
RECEIVED
7/17/2006
PUBLIC SERVICE
COMMISSION
OF KENTUCKY

INTRASTATE ACCESS SERVICES TARIFF

15. Access Service Interfaces and Transmission Specifications (Cont'd)

15.2 Special Access Service (Cont'd)

15.2.2 Network Channel Interface (NCI) Codes (Cont'd)

(C) Compatible Network Channel Interfaces (Cont'd)

(5) Video

Compatible CIs		Compatible CIs	
2TV6-1	4TV6-15 4TV7-15	4TV7-5	4TV6-5 4TV7-5
2TV6-2	6TV6-15 6TV7-15	4TV7-15	4TV6-15 4TV7-15
2TV7-1	4TV6-15 4TV7-15	6TV6-5	6TV6-5 6TV7-5
2TV7-2	6TV6-15 6TV7-15	6TV6-15	6TV6-15 6TV7-15
4TV6-5	4TV6-5 4TV7-5	6TV7-5	6TV6-5 6TV7-5
4TV6-15	4TV6-15 4TV7-15	6TV7-15	6TV6-15 6TV7-15

TARIFF BRANCH
RECEIVED
7/17/2006
PUBLIC SERVICE
COMMISSION
OF KENTUCKY

INTRASTATE ACCESS SERVICES TARIFF

15. Access Service Interfaces and Transmission Specifications (Cont'd)

15.2 Special Access Service (Cont'd)

15.2.2 Network Channel Interface (NCI) Codes (Cont'd)

(C) Compatible Network Channel Interfaces (Cont'd)

(6) Digital Data

Compatible CIs		Compatible CIs		Compatible CIs	
4DS8-15	4DS8-15+	4DU5-24	4DU5-24	6DU5-24	6DU5-24
	4DU5-24				
	4DU5-48	4DU5-48	4DU5-48	6DU5-48	6DU5-48
	4DU5-56				
	4DU5-96	4DU5-96	4DU5-96	6DU5-56	6DU5-56
	6DU5-24				
	6DU5-48	4DU8-56	4DU5-56	6DU5-96	6DU5-96
	6DU5-96				

\+ Available only as a cross connect of two digital channels at appropriate digital speeds at a Telephone Company hub.

TARIFF BRANCH
RECEIVED
7/17/2006
PUBLIC SERVICE
COMMISSION
OF KENTUCKY

INTRASTATE ACCESS SERVICES TARIFF

15. Access Service Interfaces and Transmission Specifications (Cont'd)

15.2 Special Access Service (Cont'd)

15.2.2 Network Channel Interface (NCI) Codes (Cont'd)

(C) Compatible Network Channel Interfaces (Cont'd)

(7) High Capacity

Compatible CIs		Compatible CIs	
4DS0-63	4DS0-63 4DU8-A,B or C 6DU8-A,B or C	4DS8-15J 6DU8-A	4DU8-A
		4DS8-15K 4DU8-C 6DU8-B 6DU8-C	4DU8-B
4DS6-27	4DS6-27 4DU8-A,B or C 6DU8-A,B or C		
4DS6-44	4DS6-44 4DU8-A,B or C 6DU8-A,B or C	4DS8-31 4DU8-A,B or C 6DU8-A,B or C	4DS8-31
4DS8-15	4DS8-15+ 4DU8-B 6DU8-8	4DU8-A,B or C	4DU8-A,B or C

+ Available only as a cross connect of two individual channels of 1.544 Mbps facilities at a Telephone Company hub.

TARIFF BRANCH
RECEIVED
7/17/2006
PUBLIC SERVICE
COMMISSION
OF KENTUCKY

INTRASTATE ACCESS SERVICES TARIFF

16. Reserved

This section reserved for future use.

TARIFF BRANCH
RECEIVED
7/17/2006
PUBLIC SERVICE
COMMISSION
OF KENTUCKY

INTRASTATE ACCESS SERVICES TARIFF

17. Rates and Charges

17.1 Common Line Access Service

17.1.1 Carrier Common Line Access Service

Regulations concerning Carrier Common Line Access are set forth in Section 3 preceding.

	Rate
Premium/ Access	
- Terminating Per Access Minute	$ 0.00
- Originating Per Access Minute	$ 0.00
Non-Premium Access	
- Terminating Per Access Minute	$ 0.00
- Originating Per Access Minute	$ 0.00

TARIFF BRANCH
RECEIVED
7/17/2006
PUBLIC SERVICE
COMMISSION
OF KENTUCKY

INTRASTATE ACCESS SERVICES TARIFF

17. Rates and Charges (Cont'd)

17.1 Carrier Common Line Access Service (Cont'd)

17.1.2 Non-Traffic Sensitive Revenue

Regulations concerning Non-Traffic Sensitive Revenue charges are set forth in Section 3.9 preceding. The Non-Traffic Sensitive Revenue Requirement per access line per month rate follows:

	Rate
- Per Access Line, Per Month	$ 2.51

TARIFF BRANCH
RECEIVED
7/17/2006
PUBLIC SERVICE
COMMISSION
OF KENTUCKY

INTRASTATE ACCESS SERVICES TARIFF

17. Rates and Charges (Cont'd)

17.2 Switched Access Service

Regulations concerning Switched Access Service charges are set forth in Section 6 preceding.

17.2.1 Nonrecurring Charges — **Rate**

(A) Local Transport - Installation

- Per Entrance Facility
  - Voice Grade Two-Wire $227.00
  - Voice Grade Four-Wire $227.00
  - High Capacity DS1 $178.00
  - High Capacity DS3 $941.00

(B) Interim NXX Translation Per Order

- Per LATA or Market Area $124.00

(C) FGC and FGD Conversion of Multifrequency Address Signaling to SS7 Signaling or SS7 Signaling to Multifrequency Address Signaling

- Per 24 Trunks Converted or Fraction thereof on a Per Order Basis $242.00

(D) Trunk Activation

- Per 24 Trunks Activated or Fraction thereof, on a Per Order Basis $242.00

(E) Local Transport - Installation
Per Line or Trunk $220.00

TARIFF BRANCH
RECEIVED
7/17/2006
PUBLIC SERVICE
COMMISSION
OF KENTUCKY

INTRASTATE ACCESS SERVICES TARIFF

17. Rates and Charges (Cont'd)

17.2 Switched Access Service (Cont'd)

17.2.2 Local Transport — **Rate**

Premium Access

- **Entrance Facility**
  Per Termination
  - Voice Grade Two-Wire — $36.34
  - Voice Grade Four-Wire — $58.14
  - High Capacity DS1 — $266.87
  - High Capacity DS3 — $2,802.11

- **Direct Trunked Transport**
  - Direct Trunked Facility
    Per Mile
    - Voice Grade — $2.59
    - High Capacity DS1 — $33.76
    - High Capacity DS3 — $371.35
  - Direct Trunked Termination
    Per Termination
    - Voice Grade — $26.01
    - High Capacity DS1 — $156.02
    - High Capacity DS3 — $858.11

- **Multiplexing**
  Per Arrangement
  - DS3 to DS1 — $711.40
  - DS1 to Voice — $212.35

- **Tandem Switched Transport**
  - Tandem Switched Facility — $.000156
    Per Access Minute Per Mile
  - Tandem Switched Termination — $.000722
    Per Access Minute Per Termination
  - Tandem Switching — $.000990
    Per Access Minute Per Tandem
  - Local Transport Facility — $.000187
    Per Access Minute Per Mile
  - Local Transport Termination
    Per Access Minute — $.0147

- **Residual Interconnection Charge** — $.013179
  Per Access Minute

- **Network Blocking Per Blocked Call**
  Applies to FGD only — $.0359

TARIFF BRANCH
RECEIVED
7/17/2006
PUBLIC SERVICE
COMMISSION
OF KENTUCKY

INTRASTATE ACCESS SERVICES TARIFF

17. Rates and Charges (Cont'd)

17.2 Switched Access Service (Cont'd)

17.2.2 Local Transport (Cont'd) **Rate**

Non Premium Access

- **Tandem Switched Transport**
  - Local Transport Facility — $.000084
    Per Access Minute Per Mile
  - Local Transport Termination — $.0066
    Per Access Minute
- **Residual Interconnection Charge**
  Per Access Minute — $.005931

TARIFF BRANCH
RECEIVED
7/17/2006
PUBLIC SERVICE
COMMISSION
OF KENTUCKY

INTRASTATE ACCESS SERVICES TARIFF

17. Rates and Charges (Cont'd)

17.2 Switched Access Service (Cont'd)

17.2.2 Local Transport (Cont'd)

(A) Common Channel Signaling Network Connection

	Monthly Rate	Nonrecurring Charge
(1) Signaling Network Access Link		
- Signaling Mileage Facility per Mile	$ 5.19	
- Signaling Mileage Termination per Termination	$ 52.02	
- Signaling Entrance Facility per Facility	$ 67.23	$176.00
(2) STP Port		
- per port	$830.18	

(B) 800 Data Base Access Service Queries

	Rate
Per Completed Query	
Basic	$0.0075
Vertical Feature	$0.0077

TARIFF BRANCH
RECEIVED
7/17/2006
PUBLIC SERVICE
COMMISSION
OF KENTUCKY

INTRASTATE ACCESS SERVICES TARIFF

17. Rates and Charges (Cont'd)

17.2 Switched Access Service (Cont'd)

17.2.3 End Office

(A) Local Switching

Premium

- Local Switching 1 Per Access Minute	$0.0412
Feature Groups A & B* (except: (1) Feature Group B utilized for the provision of MTS/WATS service (2) Feature Groups A and B when utilized for the provision of terminating inward WATS and WATS-type services at an equal access WATS Serving Office.	
- Local Switching 2 Per Access Minute	$0.0412
Feature Groups C & D (including: (1) Feature Group B when utilized for the provision of MTS/WATS service, (2) Feature Groups A and B when utilized for the provision of terminating inward WATS and WATS-type services at an equal access WATS Serving Office.	
Non-Premium Per Access Minute	$0.0185

(B) Information Surcharge

- Premium Per Access Minute	$0.000267
- Non-Premium Per Access Minute	$0.000120

* Local Switching 1 when applied to Feature Group B with an ADA is multiplied by the ADA rate factor listed in 17.2 4 following.

TARIFF BRANCH
RECEIVED
7/17/2006
PUBLIC SERVICE
COMMISSION
OF KENTUCKY

INTRASTATE ACCESS SERVICES TARIFF

17. Rates and Charges (Cont'd)

17.2 Switched Access Service (Cont'd)

17.2.4 Feature Group B (FGB) with an Abbreviated Dialing Arrangement (ADA) Rate Factor

When developing Carrier Common Line and Traffic Sensitive rates and charges for FGB ADA, the Telephone Company will multiply the charges computed pursuant to Section 3.8 and 6.4 by an ADA rate factor. This factor does not apply to the NTSR rates and charges as set forth in Section 3.9. The ADA rate factor is .95.

17.2.5 Reserved

TARIFF BRANCH
RECEIVED
7/17/2006
PUBLIC SERVICE
COMMISSION
OF KENTUCKY

INTRASTATE ACCESS SERVICES TARIFF

17. Rates and Charges (Cont'd)

17.2 Switched Access Service (Cont'd)

17.2.6 Assumed Minutes of Use

		Assumed Minutes Per Line or Trunk Per Month
(A)	Feature Group A, Two Way Calling (1510 Originating, 2685 Terminating)	4195
(B)	Feature Group A, Originating Only	1510
(C)	Feature Group A, Terminating Only	2685
(D)	Feature Group B, Two Way Calling (3132 Originating, 5568 Terminating)	8700
(E)	Feature Group B, Originating Only	3132
(F)	Feature Group B, Terminating Only	5568

TARIFF BRANCH
RECEIVED
7/17/2006
PUBLIC SERVICE
COMMISSION
OF KENTUCKY

INTRASTATE ACCESS SERVICES TARIFF

17. Rates and Charges (Cont'd)

17.3 Special Access Service

17.3.1 Surcharge for Special Access Service

Regulations concerning Surcharge for Special Access are set forth in Section 7.3 preceding.

	Monthly Rate
- Per Voice Grade Equivalent	$25.00

17.3.2 Metallic Service

Regulations concerning Metallic Service are set forth in Section 7.4 preceding.

	Monthly Rate	Nonrecurring Charge
(A) Channel Termination Per Termination	$20.00	$58.00
(B) Channel Mileage		
(1) Channel Mileage Facility Per Mile	$31.13	
(2) Channel Mileage Termination Per Termination	$ 2.17	
(C) Optional Features and Functions		
(1) Bridging		
(a) Three Premises Bridging Per Port	$ 6.15	
(b) Series Bridging Per Port	$ 6.15	

TARIFF BRANCH
RECEIVED
7/17/2006
PUBLIC SERVICE
COMMISSION
OF KENTUCKY

INTRASTATE ACCESS SERVICES TARIFF

17. Rates and Charges (Cont'd)

17.3 Special Access Service (Cont'd)

17.3.3 Telegraph Grade Service

Regulations concerning Telegraph Grade Service are set forth in Section 7.5 preceding.

		Monthly Rate	Nonrecurring Charge
(A)	**Channel Termination Per Termination**		
	- Two-Wire	$20.00	$58.00
	- Four Wire	$40.01	$58.00
(B)	**Channel Mileage**		
	(1) Channel Mileage Facility Per Mile	$ 2.59	
	(2) Channel Mileage Termination Per Termination	$26.01	
(C)	**Optional Features and Functions**		
	(1) Telegraph Bridging Per Port		
	- Two-Wire	$ 6.15	
	- Four-Wire	$ 6.15	

TARIFF BRANCH
RECEIVED
7/17/2006
PUBLIC SERVICE
COMMISSION
OF KENTUCKY

INTRASTATE ACCESS SERVICES TARIFF

17. Rates and Charges (Cont'd)

17.3 Special Access Service (Cont'd)

17.3.4 Voice Grade Service

Regulations concerning Voice Grade Service are set forth in Section 7.6 preceding.

	Monthly Rate	Nonrecurring Charge
(A) Channel Termination Per Termination		
- Two-Wire	$36.34	$227.00
- Four Wire	$58.14	$227.00
(B) Channel Mileage		
(1) Channel Mileage Facility Per Mile	$ 2.59	
(2) Channel Mileage Termination Per Termination	$26.01	
(C) Optional Features and Functions		
(1) Bridging		
(a) Voice Bridging Per Port		
Two-Wire/Four Wire		
- Two-Wire	$ 6.15	
- Four-Wire	$ 6.15	

TARIFF BRANCH
RECEIVED
7/17/2006
PUBLIC SERVICE
COMMISSION
OF KENTUCKY

INTRASTATE ACCESS SERVICES TARIFF

17. Rates and Charges (Cont'd)

17.3 Special Access Service (Cont'd)

17.3.4 Voice Grade Service (Cont'd)

	Monthly Rate
(C) Optional Features and Functions (Cont'd)	
(1) Bridging (Cont'd)	
(b) Data Bridging per port	
- Two-Wire	$ 6.15
- Four-Wire	$ 6.15
(c) Telephoto Bridging per port	
- Two-Wire	$ 6.15
- Four-Wire	$ 6.15
(d) DATAPHONE Select-A-Station Bridging	
Sequential Arrangement, Ports Per channel connected	
- Two-Wire	$ 22.19
- Four-Wire	$117.70
Addressable Arrangement, Ports Per channel connected	
- Two-Wire	$ 23.75
- Four-Wire	$102.80

TARIFF BRANCH
RECEIVED
7/17/2006
PUBLIC SERVICE
COMMISSION
OF KENTUCKY

INTRASTATE ACCESS SERVICES TARIFF

17. Rates and Charges (Cont'd)

17.3 Special Access Service (Cont'd)

17.3.4 Voice Grade Service (Cont'd)

(C) Optional Features and Functions (Cont'd)

(1) Bridging (Cont'd)

(e) Telemetry and Alarm Bridging

	Monthly Rate
Active Bridging Channel Connections Per channel connected	
- Split Band	$ 8.89
- Summation	$ 3.47
Passive Bridging Channel Connections Per channel connected	$ 0.24

(2) Conditioning Per Termination

- C-Type	$ 7.90
- Improved Attenuation Distortion*	None
- Improved Envelope Delay Distortion*	None
- Data Capability	$ 5.30
- Telephoto Capability	$ 9.02
- Sealing Current	None

- Improved Attenuation Distortion and Improved Envelope Delay Distortion will continue to be provided to all customers who were provided with either or both of these optional features in conjunction with C-Type Conditioning prior to May 4, 1988.

TARIFF BRANCH
RECEIVED
7/17/2006
PUBLIC SERVICE
COMMISSION
OF KENTUCKY

INTRASTATE ACCESS SERVICES TARIFF

17. Rates and Charges (Cont'd)

17.3 Special Access Service (Cont'd)

17.3.4 Voice Grade Service (Cont'd)

(C) Optional Features and Functions (Cont'd)

		Monthly Rate
(3)	Improved Return Loss for Effective Two-Wire or Four-Wire Transmission Per Termination	
	- Two-Wire	$13.35
	- Four-Wire	$13.35
(4)	Customer Specified Receive Level per two-wire termination	$ 8.80
(5)	Multiplexing Per arrangement Voice to Telegraph Grade	$226.19
(6)	Signaling Capability Per termination	$ 13.50
(7)	Selective Signaling Arrangement Per arrangement	$ 6.50

TARIFF BRANCH
RECEIVED
7/17/2006
PUBLIC SERVICE
COMMISSION
OF KENTUCKY

INTRASTATE ACCESS SERVICES TARIFF

17. Rates and Charges (Cont'd)

17.3 Special Access Service (Cont'd)

17.3.4 Voice Grade Service (Cont'd)

	Monthly Rate
(C) Optional Features and Functions (Cont'd)	
(8) Transfer Arrangement (key activated* or Dial-Up**)	
- Per four port arrangement including control channel termination***	$ 3.13
- Per five port arrangement including control channel termination***	$ 7.14
(9) Public Packet Switching Network (PPSN) Interface Arrangement Per arrangement	ICB

ICB rates and charges are filed in 17.3.9 following.

* The key activated control channel is rated as a Metallic Channel Termination and Channel Mileage, if applicable.

** The Dial-Up option requires the customer to purchase the Controller Arrangement from 13.3.8 preceding.

*** An additional Channel Termination charge will apply whenever a spare channel is configured as a leg to the customer designated premises. Additional channel mileage charges will also apply when the transfer arrangement is not located in the customer designated premises serving wire center.

TARIFF BRANCH
RECEIVED
7/17/2006
PUBLIC SERVICE
COMMISSION
OF KENTUCKY

INTRASTATE ACCESS SERVICES TARIFF

17. Rates and Charges (Cont'd)

17.3 Special Access Service (Cont'd)

17.3.5 Program Audio Service

Regulations concerning Program Audio Service are set forth in 7.7 preceding.

	Monthly Rate	Daily* Rate	Nonrecurring Charge Monthly	Nonrecurring Charge Daily*
(A) Channel Termination				
Per Termination				
- 200 to 3500 Hz	$35.62	$3.56	$192.00	$192.00
- 100 to 5000 Hz	39.02	3.90	192.00	192.00
- 50 to 8000 Hz	39.02	3.90	192.00	192.00
- 50 to 15000 Hz	39.02	3.90	192.00	192.00

(B) Channel Mileage

(1) Channel Mileage Facility Per Mile	Monthly Rate	Daily* Rate
- 200 to 3500 Hz	$2. 59	$0.26
- 100 to 5000 Hz	5.19	0.52
- 50 to 8000 Hz	7.78	0.78
- 50 to 15000 Hz	10.37	1.04

(2) Channel Mileage Termination Per Termination		
- 200 to 3500 Hz	$26.01	$2.60
- 100 to 5000 Hz	52.02	5.20
- 50 to 8000 Hz	78.02	7.80
- 50 to 15000 Hz	104.03	10.40

* Daily Rates will be topped and maximum rates derived as set forth in 7.2.2(B) preceding.

TARIFF BRANCH
RECEIVED
7/17/2006
PUBLIC SERVICE
COMMISSION
OF KENTUCKY

INTRASTATE ACCESS SERVICES TARIFF

17. Rates and Charges (Cont'd)

17.3 Special Access Service (Cont'd)

17.3.5 Program Audio Service (Cont'd)

	Monthly Rate	Daily* Rate
(C) Optional Features and Functions		
(1) Bridging, Distribution Amplifier Per Port	$19.97	$2.00
(2) Gain Conditioning per service	12.90	1.29
(3) Stereo per service	22.15	2.22

* Daily rates will be topped and maximum rates derived as set forth in 7.2.2(B) preceding.

TARIFF BRANCH
RECEIVED
7/17/2006
PUBLIC SERVICE
COMMISSION
OF KENTUCKY

INTRASTATE ACCESS SERVICES TARIFF

17. Rates and Charges (Cont'd)

17.3 Special Access Service (Cont'd)

17.3.6 Video Service

Regulations concerning Video Service are set forth in 7.8 preceding.

	Monthly Rate	Daily* Rate	Nonrecurring Charge Monthly	Nonrecurring Charge Daily*
(A) Channel Termination Per Termination				
- TV-1 or 2	$367.67	$202.22	$200.00	$200.00
- 4TV-5	$358.71	$197.29	$200.00	$200.00
- 6TV-5	$381.16	$209.64	$200.00	$200.00
- TV-15	$395.63	$217.60	$200.00	$200.00

(B) Channel Mileage	Monthly Rate	Daily Rate*
(1) Channel Mileage Facility Per Mile		
- All	$336.75	$185.21
(2) Channel Mileage Termination Per Termination		
- All	$358.67	$197.27

* Daily rates will be topped and maximum rates derived as set forth in 7.2.2(B) preceding.

Issued: July 17, 2006

Effective: August 1, 2006

Vice President
Shepherdsville, Kentucky

TARIFF BRANCH
RECEIVED
7/17/2006
PUBLIC SERVICE COMMISSION OF KENTUCKY

INTRASTATE ACCESS SERVICES TARIFF

17. Rates and Charges (Cont'd)

17.3 Special Access Service (Cont'd)

17.3.7 Digital Data Service

Regulations concerning Digital Data Service are set forth in 7.9 preceding.

	Monthly Rate	Nonrecurring Charge
(A) Channel Termination		
Per termination		
- 2.4 kbps	$67.23	$176.00
- 4.8 kbps	67.23	176.00
- 9.6 kbps	67.23	176.00
- 19.2 kbps	67.23	176.00
- 56.0 kbps	67.23	176.00
- 64.0 kbps	67.23	176.00
(B) Channel Mileage		
(1) Channel Mileage Facility Per Mile		
- 2.4 kbps	$2.59	
- 4.8 kbps	2.59	
- 9.6 kbps	2.59	
- 19.2 kbps	2.59	
- 56.0 kbps	5.19	
- 64.0 kbps	5.19	
(2) Channel Mileage Termination Per Termination		
- 2.4 kbps	$26.01	
- 4.8 kbps	26.01	
- 9.6 kbps	26.01	
- 19.2 kbps	26.01	
- 56.0 kbps	52.02	
- 64.0 kbps	52.02	

TARIFF BRANCH
RECEIVED
7/17/2006
PUBLIC SERVICE
COMMISSION
OF KENTUCKY

INTRASTATE ACCESS SERVICES TARIFF

17. Rates and Charges (Cont'd)

17.3 Special Access Service (Cont'd)

17.3.7 Digital Data Service (Cont'd)

	Monthly Rate
(C) Optional Features and Functions	
(1) Bridging Per port	$7.85
(2) Loop Transfer Arrangement Per four port arrangement* Key activated** or Dial-Up***	$6.21
(3) Public Packet Switching Network Interface Arrangement	
- Per 9.6 kbps arrangement	ICB
- Per 56.0 kbps arrangement	ICB

* An additional Channel Termination charge will apply whenever a spare channel is configured as a leg to the customer designated premises. Additional Channel Mileage charges will also apply when the transfer arrangement is not located in the customer designated premises serving wire center.
ICB Rates and Charges are filed in 17.3.9 following.

** The key activated control channel is rated as a Metallic Channel Termination and Channel Mileage, if applicable.

*** The Dial-Up option requires the customer to purchase the Controller Arrangement from 13.3.4 preceding.

TARIFF BRANCH
RECEIVED
7/17/2006
PUBLIC SERVICE
COMMISSION
OF KENTUCKY

INTRASTATE ACCESS SERVICES TARIFF

17. Rates and Charges (Cont'd)

17.3 Special Access Service (Cont'd)

17.3.8 High Capacity Service

Regulations concerning High Capacity Service are set forth 7.10 preceding.

		Monthly Rate	Nonrecurring Charge
(A)	**Channel Termination**		
	Per Termination		
	- DS1 1.544 Mbps	$ 266.87	$ 178.00
	- DS1C 3.152 Mbps	ICB	ICB
	- DS2 6.312 Mbps	ICB	ICB
	- DS3 44.736 Mbps Interface	2,808.11	
	- per DS3 Channel Installed		941.60

TARIFF BRANCH
RECEIVED
7/17/2006
PUBLIC SERVICE
COMMISSION
OF KENTUCKY

INTRASTATE ACCESS SERVICES TARIFF

17. Rates and Charges (Cont'd)

17.3 Special Access Service (Cont'd)

17.3.8 High Capacity Service (Cont'd)

(B) Channel Mileage	**Monthly Rate**
(1) Channel Mileage Facility-Per Mile	
- 64 kbps*	$ 5.83
- 1.544 Mbps	33.76
- 3.152 Mbps	ICB
- 6.312 Mbps	ICB
- 44.736 Mbps	371.35
- 274.176 Mbps	ICB

(B) Channel Mileage Termination	
(2) Channel Mileage Termination Per Termination	
- 64 kbps*	$ 58.52
- 1.544 Mbps	156.02
- 3.152 Mbps	ICB
- 6.312 Mbps	ICB
- 44.736 Mbps	858.11
- 274.176 Mbps	ICB

(C) Term Discounts	**Percentage**
- DS 1 and DS3 services	
36 months	10%
60 months	20%

* Applies to through connections of 2.4, 4.8, 9.6, 56.0 and 64 kbps.
ICB rates and charges are filed in 17.3.9 following.

TARIFF BRANCH
RECEIVED
7/17/2006
PUBLIC SERVICE
COMMISSION
OF KENTUCKY

17. Rates and Charges (Cont'd)

17.3 Special Access Service (Cont'd)

17.3.8 High Capacity Service (Cont'd)

(D) Optional Features and Functions

(1) Multiplexing, per arrangement

DS4 to DS1	ICB
DS3 to DS1	$711.40
DS2 to DS1	ICB
DS1C to DS1	ICB
DS1 to Voice*	$212.35
DS1 to DS0	$268.60
DS0 to Subrates	
- Up to 20 2.4 kbps services	$398.30
- Up to 10 4.8 kbps services	287.90
- Up to 5 9.6 kbps services	251.15

* A channel of this DS1 to the Hub can be used for Digital Data service. ICB rates and charges are filed in 17.3.9 following.

TARIFF BRANCH
RECEIVED
7/17/2006
PUBLIC SERVICE
COMMISSION
OF KENTUCKY

INTRASTATE ACCESS SERVICES TARIFF

17. Rates and Charges (Cont'd)

17.3 Special Access Service (Cont'd)

17.3.8 High Capacity Service (Cont'd)

(D) Optional Features and Functions (Cont'd)

	Monthly Rate
(2) Automatic Loop Transfer Per arrangement*	$202.60
(3) Transfer Arrangement (key activated** or Dial-Up***) Per four port arrangement including Control channel termination****	$172.20
(4) Clear Channel Capability - per 1.544 Mbps transmission path	None

* An additional Channel Termination charge will apply whenever the spare line is provided as a leg to the customer designated premises.

** The key activated control channel is rated as a Metallic Channel Termination and Channel Mileage, if applicable.

*** The Dial-Up option requires the customer to purchase the Controller Arrangement from 13.3.4 preceding.

**** An additional Channel Termination charge will apply whenever a spare channel is configured as a leg to the customer designated premises. Additional channel mileage charges will also apply when the transfer arrangement is not located in the customer designated premises serving wire center.

TARIFF BRANCH
RECEIVED
7/17/2006
PUBLIC SERVICE
COMMISSION
OF KENTUCKY

INTRASTATE ACCESS SERVICES TARIFF

17. Rates and Charges (Cont'd)

17.3 Special Access Service (Cont'd)

17.3.9 Individual Case Filings

Rates and charges for Special Access Service provided on an individual case basis are filed following:

Reserved

TARIFF BRANCH
RECEIVED
7/17/2006
PUBLIC SERVICE
COMMISSION
OF KENTUCKY

INTRASTATE ACCESS SERVICES TARIFF

17. Rates and Charges (Cont'd)

17.4 Other Services

17.4.1 Access Ordering

Regulations concerning Access Ordering are set forth in Section 5 preceding.

		Charge
(A)	**Access Order Charge**	
	Per Order	$ 124.00
(B)	**Service Date Change Charge**	
	A service Date Change Charge will apply, on a per order per occurrence basis, for each service date changed. The Access Order Charge as specified in 17.4.1(A) preceding does not apply. The applicable charge is:	
	Service Date Change Charge, per order	$ 19.00
(C)	**Design Change Charge**	
	The Design Change Charge will apply on a per order per occurrence basis, for each order requiring design change. The applicable charge is:	
	Design Change Charge, per order	$ 19.00
(D)	**Miscellaneous Service Order Charge**	
	Per Occurrence	$ 19.00

TARIFF BRANCH
RECEIVED
7/17/2006
PUBLIC SERVICE
COMMISSION
OF KENTUCKY

INTRASTATE ACCESS SERVICES TARIFF

17. Rates and Charges (Cont'd)

17.4 Other Services (Cont'd)

17.4.2 Additional Engineering

Regulations concerning Additional Engineering are set forth in Section 13.1 preceding.

Additional Engineering Periods		Each Half Hour or Fraction Thereof
(A)	Basic Time per engineer normally scheduled working hours	$ 18.49
(B)	Overtime per engineer outside of normally scheduled working hours	$ 27.73
(C)	Premium Time outside of scheduled work day, per engineer	$ 36.98

TARIFF BRANCH
RECEIVED
7/17/2006
PUBLIC SERVICE
COMMISSION
OF KENTUCKY

INTRASTATE ACCESS SERVICES TARIFF

17. Rates and Charges (Cont'd)

17.4 Other Services (Cont'd)

17.4.3 Additional Labor

Regulations concerning Additional labor are set forth in Section 13.2 preceding.

Additional Labor Periods	Each Half Hour or Fraction Thereof
(A) Installation or Repair	
- Overtime* outside of normally scheduled working hours on a scheduled work day, per technician	$ 21.60
- Premium Time* outside of scheduled work day, per technician	$ 28.80
(B) Stand by	
- Basic time, normally scheduled working hours, per technician	$ 16.42
- Overtime, outside of normally scheduled working hours on a scheduled work day, per technician	$ 24.63
- Premium Time, outside of scheduled work day, per technician	$ 32.83

* A call out of a Telephone Company employee at a time not consecutive with the employee's scheduled work period is subject to a minimum charge of four hours.

TARIFF BRANCH
RECEIVED
7/17/2006
PUBLIC SERVICE
COMMISSION
OF KENTUCKY

INTRASTATE ACCESS SERVICES TARIFF

17. Rates and Charges (Cont'd)

17.4 Other Services (Cont'd)

17.4.3 Additional Labor (Cont'd)

Additional Labor Periods	Each Half Hour or Fraction Thereof	
	Installation and Repair Technician	Central Office Maintenance Technician
(C) Testing and Maintenance with other Telephone Companies, or Other Labor		
- Basic Time per technician normally scheduled working hours	$ 14.40	$ 17.16
- Overtime per technician outside of normally scheduled working hours on a scheduled work day,	$ 21.60*	$ 25.74*
- Premium Time per technician outside of scheduled work day	$ 28.80*	$ 34.32*

* A call out of a Telephone Company employee at a time not consecutive with the employee's scheduled work period is subject to a minimum charge of four hours.

TARIFF BRANCH
RECEIVED
7/17/2006
PUBLIC SERVICE
COMMISSION
OF KENTUCKY

INTRASTATE ACCESS SERVICES TARIFF

17. Rates and Charges (Cont'd)

17.4 Other Services (Cont'd)

17.4.4 Miscellaneous Services

(A) Additional Cooperative Acceptance Testing - Switched Access

Testing Periods	Each Half Hour or Fraction Thereof
Basic Time, Overtime* and Premium Time*	See the rates for Additional Labor as set forth in 17.4.3(C) preceding.

* A call out of a Telephone Company employee at a time not consecutive with the employee's scheduled work period is subject to a minimum charge of four hours.

TARIFF BRANCH
RECEIVED
7/17/2006
PUBLIC SERVICE
COMMISSION
OF KENTUCKY

INTRASTATE ACCESS SERVICES TARIFF

17. Rates and Charges (Cont'd)

17.4 Other Services (Cont'd)

17.4.4 Miscellaneous Services (Cont'd)

(B) Additional Automatic Testing - Switched Access

To First Point of Switching

Additional Tests	Per Test Per Transmission Path
Gain-Slope Tests	$2.89
C-Notched Noise Tests	$2.89
1004 Hz Loss*	$2.89
C-Message Noise*	$2.89
Balance (return loss)*	$2.89

(C) Additional Manual Testing - Switched Access

To First Point of Switching

Additional Tests	Each Half Hour or Fraction Thereof
Gain-Slope, C-Notched Noise and any other agreed to tests, per technician	See the rates for Additional Labor as set forth in 17.4.3(C) preceding

* 1004 Hz Loss, C-Message Noise and Balance are non-chargeable routine tests, however, they may be requested on an as needed or more than routine scheduled basis, in which case the charges herein apply.

TARIFF BRANCH
RECEIVED
7/17/2006
PUBLIC SERVICE COMMISSION OF KENTUCKY

INTRASTATE ACCESS SERVICES TARIFF

17. Rates and Charges (Cont'd)

17.4 Other Services (Cont'd)

17.4.4 Miscellaneous Services (Cont'd)

(D) Additional Cooperative Acceptance Testing - Special Access

Testing Periods	Each Half Hour or Fraction Thereof
Basic Time, Overtime* and Premium Time*	See the rates for Additional Labor as set forth in 17.4.3(C) preceding.

(E) Additional Manual Testing - Special Access

Testing Periods	Each Half Hour or Fraction Thereof
Basic Time, Overtime* and Premium Time*	See the rates for Additional Labor as set forth in 17.4.3(C) preceding.

(F) Maintenance of Service

Testing Periods	Each Half Hour or Fraction Thereof
Basic Time, Overtime* and Premium Time*	See the rates for Additional Labor as set forth in 17.4.3(C) preceding.

* A call out of a Telephone Company employee at a time not consecutive with the employee's scheduled work period is subject to a minimum charge of four hours.

TARIFF BRANCH
RECEIVED
7/17/2006
PUBLIC SERVICE
COMMISSION
OF KENTUCKY

INTRASTATE ACCESS SERVICES TARIFF

17. Rates and Charges (Cont'd)

17.4 Other Services (Cont'd)

17.4.4 Miscellaneous Services (Cont'd)

(G) Telecommunications Service Priority	**Nonrecurring Charge**
Per service arranged	$ 54.63

(H) Controller Arrangement	**Monthly Rate**
Per Arrangement	$100.00

(I) Presubscription	**Nonrecurring Charge**
- InterLATA PIC Change Per Telephone Exchange Service line or trunk*	$ N/A
- IntraLATA PIC Change Per Telephone Exchange Service line or trunk*	$ 5.00

* This charge is generally billed to the end user who is the subscriber to the Telephone Exchange Service. In those instances where the IC both requests the presubscription change, and requests the associated charge be billed to it, the Telephone Company will bill the IC. In the event an end user is incorrectly presubscribed due to misassignment on the part of the Telephone Company, no charge shall apply. In the event an end user is incorrectly presubscribed due to misassignment on the part of the IC, and the IC is unable to document such an assignment, the Telephone Company will apply the charge to the IC responsible for the misassignment of the end user and assign the end user to an IC of the end user's choice.

TARIFF BRANCH
RECEIVED
7/17/2006
PUBLIC SERVICE
COMMISSION
OF KENTUCKY

17. Rates and Charges (Cont'd)

17.4 Other Services (Cont'd)

17.4.4 Miscellaneous Services (Cont'd)

		Nonrecurring Charge
(J)	**Unauthorized PIC Change**	
	- Residence/Business Per Telephone Exchange Service Line or Trunk	$ N/A
	- Per Pay Telephone Exchange Service Line or Trunk	$ N/A
(K)	**900 Blocking Service***	
	- Per exchange service line or trunk, and/or per Feature Group A Switched Access Line	$ N/A
(L)	**Billing Name and Address Service**	
	- Per BNA Order	$ N/A
	- Per BNA Record	$ N/A
	- Optional Magnetic Tape Charge Per Magnetic Tape	$ N/A
	- Optional Format Programming Charge Per each half hour or fraction thereof	$ N/A

- Blocking access to 900 Service is offered to all subscribers at no charge at the time telephone service is established at a new number and for 60 days thereafter.

TARIFF BRANCH
RECEIVED
7/17/2006
PUBLIC SERVICE COMMISSION OF KENTUCKY

17. Rates and Charges (Cont'd)

17.4 Other Services (Cont'd)

17.4.4 Miscellaneous Services (Cont'd)

(M) Access Services Billing

Regulations concerning Access Services Billing are set forth in 13.13 preceding.

(1) Secondary Bill

	Monthly Rate
Standard Paper(per page)	ICB
Magnetic Tape(per tape)	ICB
Data Transmission(per transmission)	ICB

(2) Additional Copies

	Non Recurring Charge
Standard Paper(per page)	ICB
Magnetic Tape(per tape)	ICB
Data Transmission(per transmission)	ICB

TARIFF BRANCH
RECEIVED
7/17/2006
PUBLIC SERVICE
COMMISSION
OF KENTUCKY

INTRASTATE ACCESS SERVICES TARIFF

17. Rates and Charges (Cont'd)

17.4 Other Services (Cont'd)

17.4.5 Special Federal Government Access Services

Regulations concerning Special Federal Government Access Services are set forth in Section 10 preceding.

(A) Voice Grade Secure Communications

	Monthly Rates	Nonrecurring Charges	Termination Charges
Type I, each T-3 Conditioning,	ICB rates and charges apply		
Additional Conditioning, per service termination	ICB rates and charges apply		
Type II, each G-1 Conditioning,	ICB rates and charges apply		
Type III, each G-2 Conditioning,	ICB rates and charges apply		
Additional Conditioning, per service termination	ICB rates and charges apply		
Type IV, each G-3 Conditioning,	ICB rates and charges apply		
Additional Conditioning, per service termination	ICB rates and charges apply		

(B) Wideband Digital Special Access Service

Wideband Secure Communications	Monthly Rates	Nonrecurring Charges	Termination Charges
Type I, each	ICB rates and charges apply		
Type II, each	ICB rates and charges apply		
Type III, each	ICB rates and charges apply		

TARIFF BRANCH
RECEIVED
7/17/2006
PUBLIC SERVICE
COMMISSION
OF KENTUCKY

INTRASTATE ACCESS SERVICES TARIFF

17. Rates and Charges (Cont'd)

17.4 Other Services (Cont'd)

17.4.6 Special Facilities Routing of Access Services

Regulations concerning Special Facilities Routing of Access Services are set forth in Section 11 preceding.

(A) Diversity

For each service provided in accordance with 11.1.1 preceding, the rates and charges will be developed on an individual case basis.

(B) Avoidance

For each service provided in accordance with 11.1.2 preceding, the rates and charges will be developed on an individual case basis.

(C) Diversity and Avoidance Combined

For each service provided in accordance with 11.1.1 and 11.1.2 preceding, combined, the rates and charges will be developed on an individual case basis.

(D) Cable-Only Facilities

For each service provided in accordance with 11.1.4 preceding, the rates and charges will be developed on an individual case basis.

TARIFF BRANCH
RECEIVED
7/17/2006
PUBLIC SERVICE
COMMISSION
OF KENTUCKY

INTRASTATE ACCESS SERVICES TARIFF

17. Rates and Charges (Cont'd)

17.4 Other Services (Cont'd)

17.4.7 Specialized Service or Arrangements

Regulations concerning Specialized Service or Arrangements are set forth in Section 12 preceding.

Specialized Service or Arrangements are provided on an individual case basis.

TARIFF BRANCH
RECEIVED
7/17/2006
PUBLIC SERVICE
COMMISSION
OF KENTUCKY

INTRASTATE ACCESS SERVICES TARIFF

17. Rates and Charges (Cont'd)

17.5 Billing and Collection Services

Regulations concerning Billing and Collection Services are set forth in Section 8 preceding.

17.5.1 Recording Service

		Rates
(A)	**Recording,**	
	- per customer message	$ 0.0319
	- per Special Order	20.58
(B)	**Assembly and Editing,**	
	- per customer message*	ICB
(C)	**Provision of customer message detail,**	
	- unsorted without name and address information, per record processed	ICB
	- sorted output without name and address information, per record processed	ICB
	- unsorted output with name and address information, per record processed	ICB
	- sorted output with name and address information, per record processed	ICB
	- per tape or data file	ICB
(D)	**Data transmission to a customer location,**	
	- per record transmitted	ICB

* Applicable when Recording Service is ordered without Message Processing Service. Not applicable when Message Processing Service, as Set forth in Section 8.2.1, is provided to the customer except as set forth in Section 8.2.1(B)(1)(c) and Section 8.2.1(B)(2)(d).

TARIFF BRANCH
RECEIVED
7/17/2006
PUBLIC SERVICE
COMMISSION
OF KENTUCKY

INTRASTATE ACCESS SERVICES TARIFF

17. Rates and Charges

17.5 Billing and Collection Services (Cont'd)

17.5.2 Message Billing Service	Rates
(A) Message Processing Service	
- 1 year period, per message	$ 0.0141
- 3 year period, per message	ICB
- 5 year period, per message	ICB
(B) Additional Message Processing,	
- per message above the message capacity ordered and allowance specified	$ 0.0141
(C) Program Development,	
- Basic, per hour (Applicable to work performed within the Telephone Company's normal work schedule and using the normal work force)	$64.83
- Premium, per hour (applicable to work performed outside the Telephone Company's normal work schedule and/or which requires additions to the work force)	$87.47
(D) Data transmission of related customer message detail between other Exchange Telephone Company locations,	
- per record transmitted	$ 0.0094
- per record received	$ 0.0094

TARIFF BRANCH
RECEIVED
7/17/2006
PUBLIC SERVICE
COMMISSION
OF KENTUCKY

INTRASTATE ACCESS SERVICES TARIFF

17. Rates and Charges

17.5 Billing and Collection Service

17.5.2 Message Billing Service (Cont'd)

	Rates
(E) Provision of rated customers message detail,	
- per record processed	ICB
- per tape or data file	ICB
(F) Data transmission of rated customer message details, to a location designated by the customer,	
- per record transmitted	ICB

TARIFF BRANCH
RECEIVED
7/17/2006
PUBLIC SERVICE
COMMISSION
OF KENTUCKY

INTRASTATE ACCESS SERVICES TARIFF

17. Rates and Charges

17.5 Billing and Collection Service

17.5.2 Message Billing Service (Cont'd)

(G) Bill Process Service

	Rates Messages per End User Account per Month			
	1 to 10	11 to 100	101 to 600	Over 600
message-billed processing,				
- 1 year period, per message	$0.0513	$0.0513	$0.0513	$0.0513
- 3 year period, per message	ICB	ICB	ICB	ICB
- 5 year period, per message	ICB	ICB	ICB	ICB
message-billed inquiry,				
- 1 year period, per message	$0.0411	$0.0411	$0.0411	$0.0411
- 3 year period, per message	ICB	ICB	ICB	ICB
- 5 year period, per message	ICB	ICB	ICB	ICB

	Rates
bulked-billed processing,	
- 1 year period, per message	$0.0513
- 3 year period, per message	ICB
- 5 year period, per message	ICB
bulked-billed inquiry	
- 1 year period, per message	$0.0411
- 3 year period, per message	ICB
- 5 year period, per message	ICB

TARIFF BRANCH
RECEIVED
7/17/2006
PUBLIC SERVICE
COMMISSION
OF KENTUCKY

INTRASTATE ACCESS SERVICES TARIFF

17. Rates and Charges

17.5 Billing and Collection Service

17.5.2 Message Billing Service (Cont'd)

	Rates
(H) Additional Bill Processing per message above the bill capacity ordered and allowance specified	
- message-billed processing, each	$0.0513
- message-billed inquiry, each	$0.0411
- bulk-billed processing, each	$0.0513
- bulk-billed inquiry, each	$0.0411
(I) Message-Billed Service, in which one or more messages or message service related rate elements are billed,	
- per bill rendered for an end user account	$0.88
(J) Bulk-Billed Service, in which a charge associated with a bulk-billed service is billed,	
- per bill rendered for an end user account	$0.88

TARIFF BRANCH
RECEIVED
7/17/2006
PUBLIC SERVICE
COMMISSION
OF KENTUCKY

INTRASTATE ACCESS SERVICES TARIFF

17. Rates and Charges

17.5 Billing and Collection Service

17.5.2 Message Billing Service (Cont'd)

	Rates
(K) End User Account Activity,	
- Special Order Charge to receive end user account data,	ICB
- End User Account Establishment and Change Charge, per end user account established or changed, except rate element, rate level, and rate structure changes, per recurring or nonrecurring rate element established or charged and end user balance due changed, each	*
- End User Account Rate Element Rate Level Change Charge, per rate element changed, each	*
- End User Account Rate Element Rate Structure Change Charge, per rate element changed, each	ICB
(L) Data transmission from a location designated by the customer of Message Billing Service detail or information,	
- per record received	ICB

* Rates for these offerings are included in the Bill Processing Service message-billed processing and bulk-billed processing rates, as appropriate, set forth in (G) preceding.

TARIFF BRANCH
RECEIVED
7/17/2006
PUBLIC SERVICE
COMMISSION
OF KENTUCKY

INTRASTATE ACCESS SERVICES TARIFF

17. Rates and Charges

17.5 Billing and Collection Services

17.5.2 Message Billing Service (Cont'd)

		Rates
(M)	**Credit Card Issuance,**	
	- preparation, per end user account	*
	- distribution, per card	ICB
(N)	**Message Billing Service Special**	
	Order Charge,	
	- per Special Order	$20.58
(O)	**Retention of Records Under**	
	Accounting Orders,	ICB
	- per order per month	

* Rates for these offerings are included in the Bill Processing Service message-billed processing and bulk-billed processing rates, as appropriate, set forth in (G) preceding.

TARIFF BRANCH
RECEIVED
7/17/2006
PUBLIC SERVICE
COMMISSION
OF KENTUCKY

INTRASTATE ACCESS SERVICES TARIFF

17. Rates and Charges

17.5 Billing and Collection Services

17.5.3 Private Line Billing Service

	Rates
(A) End User Account Activity,	
- Special Order to receive end user account data, per Special Order	ICB
- End User Account Establishment and Change Charge, per end user account established or changed, except rate element, rate level, and rate structure changes, per recurring and nonrecurring rate element established or charged and end user balance due changed, each	*
- End User Account Rage Element Rate Level Change Charge, per rate element changed, each	*
- End User Account Rate Element Rate Structure Change Charge, per rate element changed, each	ICB
(B) Bill Rendering Charge	
- per bill rendered for an end user account	$1.19

* Rates for these offerings are included in the Bill Rendering Charge rate set forth in 17.5.3(B) following.

TARIFF BRANCH
RECEIVED
7/17/2006
PUBLIC SERVICE
COMMISSION
OF KENTUCKY

INTRASTATE ACCESS SERVICES TARIFF

17. Rates and Charges

17.5 Billing and Collection Services

17.5.3 Private Line Billing Service

	Rates
(C) Program Development Charge	
- Basic, per hour (applicable to work and charges performed within the Telephone's Company's normal work schedule and using the normal work force)	$64.83
- Premium, per hour (applicable to work performed outside the Telephone Company's normal work schedule and/or which requires additions to the work force)	$87.47
(D) Inquiry,	
- per bill rendered for an end user account	*
(E) Private Line Billing Special Service Order Charge,	
- per Special Order	$20.58
(F) Retention of Records Under Accounting Orders	
- per order per month	ICB

* Rate for this offering is included in the Bill Rendering Charge rate set forth in 17.5.3(B) preceding.

TARIFF BRANCH
RECEIVED
7/17/2006
PUBLIC SERVICE
COMMISSION
OF KENTUCKY

INTRASTATE ACCESS SERVICES TARIFF

17. Rates and Charges

17.5 Billing and Collection Services

17.5.4 Billing Analysis Service

		Rates
(A)	**Detection Service,**	
	- 60 Day Report per office, per report	ICB
	- Continuous Scan per office, per week	ICB
(B)	**Investigative Service,**	
	- Identification Report, per hour*	ICB
	- Collection of Evidence, per hour*	ICB
	- Documentation Scan per line, per occurrence	ICB
	- Preparation of Affidavit and Prosecutors Summary, per hour*	ICB
	- Preservation of Evidence, per week	ICB
	- Assist Law Enforcement, per hour*	ICB
	- Provision of Expert Witness Analysis, per hour*	ICB
	- Provision of Expert Witness Testimony, per hour*	ICB
	- Coordination services, per hour*	ICB
	- Review services, per hour*	ICB
(C)	**Deterrence Service,**	
	- Recovery of devices, per hour	ICB
	- Contact and Interview of Parties, per hour	ICB
	- Service Review, per hour	ICB
	- Publicity Assistance, per hour	ICB
(D)	**Provision of Billing Analysis Service,**	
	- per Special Order	ICB

- Premium time per hour rates are two times the per hour rates and will, when necessary, be included in the ICB rates and charges.

TARIFF BRANCH
RECEIVED
7/17/2006
PUBLIC SERVICE
COMMISSION
OF KENTUCKY

INTRASTATE ACCESS SERVICES TARIFF

17. Rates and Charges

17.5 Billing and Collection Services

17.5.5 Billing Information Service

	Rates *			
	Message Detail	Account Detail	Service & Equipment Detail	Detail on Tape
(A) CRIS 10 Working Day Information Service				
- Paper output, per record process	ICB	ICB	ICB	
- Magnetic tape, per record processed	$0.0073	$0.0073	ICB	
per tape or data file				$46.31
- Fiche output, per record processed	ICB	ICB	ICB	

	Rates
(B) DBAS Information Service,	
- Paper output, per record processed	#
- Magnetic tape, per record processed	#
per tape or data file	#
- Fiche output, per record processed	#
(C) CRIS File or DBAS File interrogation,	
- per request received	#

* The Quick Turnaround per record charge and the per tape charge is three times the 10 working day per record charge and per tape charge.

\# These offerings are only provided where facilities are available. However, other Exchange Telephone Companies are not under this tariff may provide such offerings. When facilities can be made available with the agreement of the Telephone Company, ICB rates and charges apply.

TARIFF BRANCH
RECEIVED
7/17/2006
PUBLIC SERVICE COMMISSION OF KENTUCKY

INTRASTATE ACCESS SERVICES TARIFF

17. Rates and Charges

17.5 Billing and Collection Services

17.5.5 Billing Information Service (Cont'd)

	Rates
(D) Program Development charge,	
- Basic, per hour (applicable to work charges apply performed within the Telephone Company's normal work schedule and using the normal work force)	$64.83
- Premium, per hour (applicable to work charges apply performed outside the Telephone Company's normal work schedule and/or which requires additions to the work force)	$87.47
(E) CNA Information Service,	
- CNA interrogation, per request received	*
- CNA interrogation confirmation, per request confirmed	*

* These offerings are only provided where facilities are available. However, other Exchange Telephone Companies are not under this tariff may provide such offerings. When facilities can be made available with the agreement of the Telephone Company, ICB rates and charges apply.

TARIFF BRANCH
RECEIVED
7/17/2006
PUBLIC SERVICE
COMMISSION
OF KENTUCKY

INTRASTATE ACCESS SERVICES TARIFF

17. Rates and Charges

17.5 Billing and Collection Services

17.5.5 Billing Information Service (Cont'd)

	Rates
(F) Data transmission of Billing Information Service details, charges apply to a location designated by the customer	
- per record transmitted	ICB
(G) Marking of Message End User Accounts,	
- marking, per end user account	ICB
- maintenance of mark, per end user account per month ICB	
(H) Updating of customer data bases or files,	
- per record transmitted	ICB
(I) Provision of Bill Information Service,	
- per Special Order	$20.58

TARIFF BRANCH
RECEIVED
7/17/2006
PUBLIC SERVICE
COMMISSION
OF KENTUCKY