RATES, RULES AND ADMINISTRATIVE REGULATIONS FOR FURNISHING INTRASTATE SWITCHED ACCESS SERVICES FOR CONNECTION TO COMMUNICATIONS FACILITIES WITHIN THE STATE OF KENTUCKY

FILED WITH THE PUBLIC SERVICE COMMISSION OF KENTUCKY

This tariff applies to the Switched Access Services furnished by Ruddata Corporation. d/b/a Vision Communications ("Company") between points within the State of Kentucky. This tariff is on file with the Kentucky Public Service Commission, and copies may be inspected, during normal business hours, at the Company's principal place of business at 523 South 3rd St., Paducah KY 42003.

PUBLIC SERVICE COMMISSION
OF KENTUCKY
EFFECTIVE
3/1/2008
PURSUANT TO 807 KAR 5:011
SECTION 9 (1)
By Stephanie Stumbo
Executive Director

1. APPLICATION OF TARIFF

1.1 APPLICATION

This Tariff applies to intrastate Access Service supplied to Customers for origination and termination of traffic between points within the Commonwealth of Kentucky.

1.2 TABLE OF CONTENTS

1.1 APPLICATION 2
1.2.1 *Check Sheet* 4
1.3 RESERVED 5
1.4 TARIFF FORMAT 5
1.4.1 *LOCATION OF MATERIAL* 5
1.4.2 *PAGE NUMBERING* 5
1.4.3 *PAGE REVISION NUMBERS* 5
1.4.4 *PARAGRAPH NUMBERING SEQUENCE* 5
1.4.5 *CHECK SHEETS* 5
1.5 EXPLANATION OF CHANGE SYMBOLS 6
1.6 EXPLANATION OF ABBREVIATIONS 6
1.7 REFERENCE TO OTHER TARIFFS 6

2. REGULATIONS 1

2.1 UNDERTAKING OF THE COMPANY 1
2.1.1 *SCOPE* 1
2.1.2 *SHORTAGE OF FACILITIES* 1
2.1.3 *TERMS AND CONDITIONS* 1
2.2 OBLIGATIONS OF THE CUSTOMER 3
2.2.1 *CUSTOMER PREMISE PROVISIONS* 3
2.2.2 *LIABILITY OF THE CUSTOMER* 3
2.2.3 *JURISDICTIONAL REPORTING REQUIREMENTS* 3
2.2.4 *CHANGES IN SERVICE REQUESTED* 5
2.2.5 *NOTICE TO COMPANY FOR CANCELLATION OF SERVICE* 5
2.3 CUSTOMER EQUIPMENT AND CHANNELS 6
2.3.1 *INTERCONNECTION OF FACILITIES* 6
2.4 ORDERING, RATING AND BILLING OF ACCESS SERVICES WHERE MORE THAN ONE EXCHANGE COMPANY IS INVOLVED. 6
2.5 ALLOWANCE FOR INTERRUPTIONS IN SERVICE 6
2.5.1 *GENERAL* 6
2.5.2 *LIMITATIONS ON ALLOWANCES* 7
2.5.3 *USE OF ANOTHER MEANS OF COMMUNICATIONS* 7
2.5.4 *APPLICATIONS OF CREDIT FOR INTERRUPTIONS OF SERVICE* 7
2.6 PRIVACY RULES 8
2.7 APPLICATIONS OF RATES AND CHARGES 8
2.7.1 *MEASURING ACCESS MINUTES* 8
2.7.2 *RATES BASED UPON DISTANCES* 9
2.7.3 *NONRECURRING CHARGES* 9
2.8 ACCESS SERVICE ORDER 10
2.8.1 *ORDERING REQUIREMENTS* 10
2.8.2 *ACCESS SERVICE ORDER INTERVALS* 11
2.8.3 *ACCESS ORDER MODIFICATIONS* 12
2.8.4 *CANCELLATION OF AN ACCESS ORDER* 13

PUBLIC SERVICE COMMISSION
OF KENTUCKY
EFFECTIVE
3/1/2008
PURSUANT TO 807 KAR 5:011
SECTION 9 (1)
By Stephanie Stumbo
Executive Director

2.8.5 MINIMUM PERIOD 14
2.8.6 MINIMUM PERIOD CHARGE 14
2.9 SPECIAL CONSTRUCTION 15

3. SWITCHED ACCESS SERVICE 1

3.1 GENERAL 1
3.2 PROVISION AND DESCRIPTION 1
3.2.1 FEATURE GROUP D 1
3.2.2 8XX TOLL-FREE ACCESS SERVICE 1
3.2.3 TRAFFIC TYPES 1
3.3 SWITCHED ACCESS RATE CATEGORIES 2
3.4 SWITCHED ACCESS RATES AND CHARGES - KENTUCKY 5

PUBLIC SERVICE COMMISSION
OF KENTUCKY
EFFECTIVE
3/1/2008
PURSUANT TO 807 KAR 5:011
SECTION 9 (1)
By Stephanie Stumbo
Executive Director

1. APPLICATION OF TARIFF

1.2.1 CHECK SHEET

The title page and sheets 1 – 27 inclusive of this tariff are effective as of the date shown. Original and revised sheets, as named below, comprise all changes from the original tariff in effect.

SECTION 1

Page	Revision
1	Original
2	Original
3	Original
4	Original
5	Original
6	Original

SECTION 3

Page	Revision
1	Original
2	Original
3	Original
4	Original
5	Original
6	Original

SECTION 2

Page	Revision
1	Original
2	Original
3	Original
4	Original
5	Original
6	Original
7	Original
8	Original
9	Original
10	Original
11	Original
12	Original
13	Original
12	Original
14	Original
15	Original

PUBLIC SERVICE COMMISSION
OF KENTUCKY
EFFECTIVE
3/1/2008
PURSUANT TO 807 KAR 5:011
SECTION 9 (1)

By Stephanie Stumbo
Executive Director

1. APPLICATION AND REFERENCE

1.3 RESERVED

1.4 TARIFF FORMAT

1.4.1 LOCATION OF MATERIAL

A. Section 1 provides the following for all of the sections in this Tariff:
Table of Contents - A numerical listing to find the desired section and page.

B. Each individual section in the Tariff provides a Subject Index for the material located within that section.

1.4.2 PAGE NUMBERING

Page numbers appear in the upper right corner of the page. Pages are numbered sequentially. However, new pages are occasionally added to the Tariff. When a new page is added between pages already in effect, a decimal is added. For example, a new page added between pages 14 and 15 would be 14.1.

1.4.3 PAGE REVISION NUMBERS

Revision numbers also appear in the upper right corner of each page. These numbers are used to determine the most current page version on file with the Commission. For example, the 4th revised Page 14 cancels the 3rd revised Page 14. Because of various suspension periods, deferrals, etc., the Commission follows in their tariff approval process, the most current page number on file with the Commission is not always the tariff page in effect. Consult the Check Sheets for the page currently in effect.

1.4.4 PARAGRAPH NUMBERING SEQUENCE

There are nine levels of paragraph coding. Each level of coding is subservient to its next higher level:

2.
2.1.
2.1.1.
2.1.1.A.
2.1.1.A.1.

1.4.5 CHECK SHEETS

When a tariff filing is made with the Commission, an updated check sheet accompanies the tariff filing. The check sheet lists the page contained in the tariff, with a cross reference to the current revision number. When new pages are added, the check sheet is changed to reflect the revision. All revisions

PUBLIC SERVICE COMMISSION
OF KENTUCKY
EFFECTIVE
3/1/2008
PURSUANT TO 807 KAR 5:011
SECTION 9 (1)
By Stephanie Stumbo
Executive Director

made in a given filing are designated by an asterisk ('*'). There will be no other symbols used on this page if these are the only changes made to it (i.e., the format, etc., remains the same, just revised revision levels on some pages). The tariff user should refer to the latest check sheet to find out if a particular page is the most current on file with the Commission.

1.5 EXPLANATION OF CHANGE SYMBOLS

SYMBOL	EXPLANATION
(C)	To signify changed term or condition
(D)	To signify discontinued material
(I)	To signify rate increase
(M)	To signify material moved from or to another part of the tariff with no change, unless there is another change symbol present
(N)	To signify new material
(R)	To signify rate reduction
(T)	To signify a change in text but no change in rate, term or condition

1.6 EXPLANATION OF ABBREVIATIONS

ANI	-	Automatic Number Identification
BHMC	-	Busy Hour Minutes of Capacity
BP	-	Billing Percentage
Cont'd	-	Continued
CCSA	-	Common Channel Signaling Access
FCC	-	Federal Communications Commission
FGB	-	Feature Group B
FGD	-	Feature Group D
e.g.	-	For example
IC	-	Interexchange Carrier
ICB	-	Individual Case Basis
Mbps	-	Megabits per second
LATA	-	Local Access and Transport Area
NECA	-	National Exchange Carrier Association
NPA	-	Numbering Plan Area
PIC	-	Primary Interexchange Carrier
PIU	-	Percentage of Interstate Usage

1.7 REFERENCE TO OTHER TARIFFS

Whenever reference is made in this Tariff to other tariffs, the reference is to the tariffs in force as of the effective date of this Tariff, and to amendments thereto and successive issues thereof.

PUBLIC SERVICE COMMISSION
OF KENTUCKY
EFFECTIVE
3/1/2008
PURSUANT TO 807 KAR 5:011
SECTION 9 (1)
By Stephanie Stumbo
Executive Director

2. REGULATIONS

2.1 UNDERTAKING OF THE COMPANY

2.1.1 SCOPE

The Company undertakes to furnish Access Services in accordance with the terms and conditions set forth in this Tariff.

2.1.2 SHORTAGE OF FACILITIES

All service is subject to the availability of suitable facilities. The Company reserves the right to limit the length of communications or to discontinue furnishing services when necessary because of the lack of transmission medium capacity or because of any causes beyond its control.

2.1.3 TERMS AND CONDITIONS

A. Service is provided on the basis of a minimum period of at least one month, 24 hours per day. For the purpose of computing charges in this Tariff, a month is considered to have 30 days.

B. Customers may be required to enter into written service orders which shall contain or reference a specific description of the service ordered, the rates to be charged, the duration of the services, and the terms and conditions in this Tariff. Customers will also be required to execute any other documents as may be reasonably requested by the Company.

C. In any action between the parties to enforce any provision of this Tariff, the prevailing party shall be entitled to recover its legal fees and court costs from the non-prevailing party in addition to other relief a court may award.

D. The Company shall comply with all rules and regulations issued by the Kentucky Public Service Commission ("PSC") applicable to local exchange companies.

E. Assignment or Transfer.

All service provided under this Tariff is controlled by the Company and the customer may not transfer or assign the use of service without the express prior written consent of the Company. Such transfer or assignment shall only apply where there is no interruption of the use or location of service. All terms and conditions shall apply to all such permitted transferees or assignees, as well as all conditions of service.

F. Use of Service.

The services the Company offers shall not be used for any unlawful purpose or for any use for which the customer has not obtained all required governmental approvals, authorization, licenses, consents and permits. The Company may require applicants for service who intend to use the Company's offering for resale and/or for shared use to file a letter with the Company confirming that their use of the Company's offerings complies with relevant laws and regulations, policies, orders and decisions. The Company may require a customer to immediately shut down its transmission if such transmission is causing interference

PUBLIC SERVICE COMMISSION
OF KENTUCKY
EFFECTIVE
3/1/2008
PURSUANT TO 807 KAR 5:011
SECTION 9 (1)
By Stephanie Stumbo
Executive Director

to others. A customer, joint user, or authorized user may not assign, or transfer in any manner, the service or any rights associated with the service without the express prior written consent of the Company. The Company will only permit a customer to transfer its existing service to another entity if the existing customer has paid all charges owed to the Company for regulated access services. All terms and conditions shall apply to all such permitted transferees or assignees, as well as all conditions of service.

Recording of telephone conversations of service provided by the Company is prohibited except as authorized by applicable federal, state and local laws.

G. Ownership of Facilities

The customer obtains no property right or interest in the use of any specific type of facility, service, equipment, number, process, or code. All right, title and interest to such items remain, at all times, solely with the Company.

2.1.4 PROVISION OF EQUIPMENT AND FACILITIES

A. Except as otherwise indicated, customer-provided equipment at the Customer's premises for use in conjunction with the Company's Access Services shall be so constructed, maintained and operated as to work satisfactorily with the facilities of the Company.

B. The Company shall not be responsible for the installation, operation or maintenance of any customer-provided communications equipment. Where such equipment is deployed in connection with Access Service furnished pursuant to this Tariff, the responsibility of the Company shall be limited to the furnishing of Access Service under this Tariff and to the maintenance and operation of such service in the proper manner. Subject to this responsibility, the Company shall not be responsible for:

1. The thorough transmission of signals generated by customer-provided equipment or for the quality of, or defects in, such transmission; or

2. The reception of signals by Customer-provided equipment; or

3. Network control signaling where such signaling is performed by Customer-provided network control signaling equipment.

C. With regard to customer-provided equipment used in connection with Access Service furnished under this Tariff, the Company reserves the right to prohibit the Customer from using such equipment which is not registered by the Federal Communications Commission pursuant to Part 68 of Title 47, Code of Federal Regulations.

PUBLIC SERVICE COMMISSION
OF KENTUCKY
EFFECTIVE
3/1/2008
PURSUANT TO 807 KAR 5:011
SECTION 9 (1)
By Stephanie Stumbo
Executive Director

2.2 OBLIGATIONS OF THE CUSTOMER

2.2.1 CUSTOMER PREMISE PROVISIONS

A. The Customer shall provide the personnel, power and space required to operate all facilities and associated equipment installed on the premises of the Customer.

B. The Customer shall be responsible for providing Company personnel access to premises of the Customer at any reasonable hour for the purpose of testing the facilities or equipment of the Company.

2.2.2 LIABILITY OF THE CUSTOMER

A. The Customer will be liable for damages to the facilities of the Company and for all incidental and consequential damages caused by the negligent or intentional acts or omissions of the Customer, its officers, employees, agents, invitees, or contractors where such acts or omissions are not the direct result of the Company's negligence or intentional misconduct.

B. To the extent caused by any negligent or intentional act of the Customer as described in A., preceding, the Customer shall indemnify, defend and hold harmless the Company from and against all claims, actions, damages, liabilities, costs and expenses, including reasonable attorneys' fees, for (1) any loss, destruction or damage to property of any third party, (2) the death of or injury to persons, including, but not limited to, employees or invitees of either party, and (3) any liability incurred by the Company to any third party pursuant to this or any other Tariff or tariff of the Company, or otherwise, for any interruption of, interference to, or other defect in any service provided by the Company to such third party.

C. The Customer shall not assert any claim against any other customer or user of the Company's services for damages resulting in whole or in part from or arising in connection with the furnishing of service under this Tariff including but not limited to mistakes, omissions, interruptions, delays, errors or other defects or misrepresentations, whether or not such other customer or user contributed in any way to the occurrence of the damages, unless such damages were caused solely by the negligent or intentional act or omission of the other customer or user and not by any act or omission of the Company. Nothing in this Tariff is intended either to limit or to expand customer's right to assert any claims against third parties for damages of any nature other than those described in the preceding sentence.

2.2.3 JURISDICTIONAL REPORTING REQUIREMENTS

A. For Feature Group D Switched Access Service(s), the Company, where jurisdiction can be determined from call detail, will determine the PIU as follows:

1. For originating access minutes, the PIU will be developed on a monthly basis, by end office trunk group, by dividing the measured interstate originating access minutes (the access minutes where the calling number is in one state and the called number is in another state) by the total originating access minutes.

2. For terminating access minutes, the Customer has the option to provide the Company

PUBLIC SERVICE COMMISSION
OF KENTUCKY
EFFECTIVE
3/1/2008
PURSUANT TO 807 KAR 5:011
SECTION 9 (1)
By Stephanie Stumbo
Executive Director

with a projected PIU factor. Customers who provide a PIU factor shall supply the Company with an interstate percentage of the Feature Group D terminating access minutes for each account to which the Customer may terminate traffic. Should the Customer not supply a terminating PIU factor, the data used by the Company to develop the PIU for originating access minutes will be used to develop the PIU for such terminating access minutes.

When a Customer orders Feature Group D Switched Access Service, the Customer shall supply a projected PIU for each end office trunk group involved to be used in the event that originating call detail is insufficient to determine the jurisdiction of the usage. For purposes of developing the PIU, the Customer shall utilize the same considerations as those set forth in B., following.

B. Where the call detail data is insufficient to develop jurisdiction, the Customer must provide the Company with a PIU using the following steps:

1. For purposes of developing the PIU, the Customer shall consider every call that enters the Customer's network at a point within the same state as the state where the called station is located to be intrastate and every call that enters the Customer's network at a point in a state different from the state in which the called station is located to be interstate.

2. The Company will designate the number obtained by subtracting the PIU from 100 (100 - percentage interstate percentage) as the projected intrastate percentage of use.

3. A whole number percentage will be used by the Company to apportion the usage, monthly recurring, and/or nonrecurring charges between interstate and intrastate until a revised report is received.

C. The projected interstate percentage of use will be used to determine the charges as follows:

The number of access minutes for a trunk group will be multiplied by the projected interstate percentage of use to determine the interstate access minutes. (i.e., number of access minutes x projected interstate percentage of use = interstate access minutes). The number of interstate access minutes so determined will be subtracted from the total number of access minutes (i.e., number of access minutes - interstate access minutes = intrastate access minutes). The intrastate access minutes for the group will be billed as set forth in Section 3., following.

D. Effective on the first of January, April, July and October of each year, the Customer may update the jurisdictional reports that require a projected interstate percentage. The Customer shall forward to the Company, to be received no later than 20 calendar days after the first of each such month, a revised report showing the interstate percentage of use for the past three months ending the last day of December, March, June and September, respectively, for each service arranged for interstate and intrastate use. Except as set forth in B., preceding, where jurisdiction can be determined from the recorded message detail, the revised report will serve as the basis for the next three months billing and will be effective on the bill date in the following month (i.e., February, May, August, and November) for that service. No prorating or back billing will be done based on the report. If the Customer does not supply the report, the Company will assume the percentage to be the same as that provided in the last quarterly report. For those cases in which a quarterly report has never been received from the Customer, the Company will assume the percentage to be the same as that provided in the order for service as set forth in A., preceding.

PUBLIC SERVICE COMMISSION
OF KENTUCKY
EFFECTIVE
3/1/2008
PURSUANT TO 807 KAR 5:011
SECTION 9 (1)
By Stephanie Stumbo
Executive Director

E. The Customer reported projected interstate percentage of use as set forth in A., above will be used for the apportionment of any monthly rates or nonrecurring charges associated with Feature Group D Switched Access Service until the end of the quarter during which the service was activated. Thereafter, a projected interstate percentage for such apportionment will be developed quarterly by the Company based on the data used to develop the projected interstate percentage of use as set forth in A., preceding. Where call detail is insufficient to make such a determination, the Customer will be requested to project an interstate percentage of use to be used by the Company for such apportionment.

F. The Customer shall keep sufficient detail from which the percentage of interstate use can be ascertained and upon request of the Company make the records available for inspection. Such a request will be initiated by the Company no more than once per year. The Customer shall supply the data within 30 calendar days of the Company request.

G. The Customer may provide an additional percentage of interstate use for Common Transport and End Office/Local Switching subject to the reporting requirements previously listed in this section. The percentage of interstate use may be provided per individual facility or at the billing account level. Should the Customer not provide a percentage of interstate use, the Company will use the reported Feature Group D aggregated percentage of interstate use.

H. In the sole discretion of the Company, all or any portion of the jurisdictional reporting requirements set out above may be waived.

2.2.4 CHANGES IN SERVICE REQUESTED

If the Customer makes or requests material changes in circuit engineering, equipment specifications, service parameters, premises locations, or otherwise materially modifies any provision of the application for service, the Customer's installation fees shall be adjusted according to the terms and conditions set forth in 2.8, following.

2.2.5 NOTICE TO COMPANY FOR CANCELLATION OF SERVICE

Customers desiring to terminate service shall provide the Company 30 days written notice of their desire to terminate service.

PUBLIC SERVICE COMMISSION
OF KENTUCKY
EFFECTIVE
3/1/2008
PURSUANT TO 807 KAR 5:011
SECTION 9 (1)
By Stephanie Stumbo
Executive Director

2.3 CUSTOMER EQUIPMENT AND CHANNELS

2.3.1 INTERCONNECTION OF FACILITIES

In order to protect the Company's facilities and personnel and the services furnished to other Customers by the Company from potentially harmful effects, the signals applied to the Company's service shall be such as not to cause damage to the facilities of the Company. Any special interface equipment necessary to achieve the compatibility between facilities of the Company and the channels or facilities of others shall be provided at the Customer's expense.

A. The Company may, upon notification to the Customer, at a reasonable time, make such tests and inspections as may be necessary to determine that the Customer is complying with the Company's requirements for the installation, operation and maintenance of customer-provided equipment and for the wiring of the connection of customer equipment to Company-owned facilities.

B. If the protective requirements in connection with customer-provided equipment are not being complied with, the Company may take such action as necessary to protect its facilities and personnel and will promptly notify the Customer by registered mail in writing or by facsimile of the need for protective action. In the event that the Customer fails to advise the Company within 10 days after such notice is received or within the time specified in the notice that corrective action has been taken, the Company may take whatever additional action is deemed necessary, including the suspension of service, to protect its facilities and personnel from harm. The Company will, upon request 24 hours in advance, provide customer with a statement of technical parameters that the Customer's equipment must meet.

2.4 ORDERING, RATING AND BILLING OF ACCESS SERVICES WHERE MORE THAN ONE EXCHANGE COMPANY IS INVOLVED.

The Company accepts and adheres to the Ordering and Billing Forum guidelines, Multiple Exchange Carrier Access Billing (MECAB) and Multiple Exchange Carrier Ordering and Design (MECOD).

2.5 ALLOWANCE FOR INTERRUPTIONS IN SERVICE

2.5.1 GENERAL

A. A credit allowance will be given when service is interrupted, except as specified in 2.5.2, following. A service is interrupted when it becomes inoperative to the Customer, e.g., the Customer is unable to transmit or receive, because of a failure of a component furnished by the Company under this Tariff.

B. An interruption period begins when the Customer reports a service, facility or circuit to be inoperative and, if necessary, releases it for testing and repair. An interruption period ends when the service, facility or circuit is operative.

C. If the Customer reports a service, facility or circuit to be interrupted but declines to release it for testing and repair, the service, facility or circuit is considered to be impaired but not interrupted. No credit allowances will be made for a service, facility or circuit considered by the Company to be impaired.

PUBLIC SERVICE COMMISSION
OF KENTUCKY
EFFECTIVE
3/1/2008
PURSUANT TO 807 KAR 5:011
SECTION 9 (1)
By Stephanie Stumbo
Executive Director

2.5.2 LIMITATIONS ON ALLOWANCES

No credit allowance will be made for any interruption in service:

A. Due to the negligence of or noncompliance with the provisions of this Tariff by any person or entity other than the Company, including but not limited to the Customer or other common carriers connected to the service of the Company;

B. Due to the failure of power, equipment, systems, connections or services not provided by the Company;

C. Due to circumstances or causes beyond the control of the Company;

D. During any period in which the Company is not given full and free access to its facilities and equipment for the purposes of investigating and correcting interruptions;

E. During any period in which the Customer continues to use the service on an impaired basis;

F. During any period when the Customer has released service to the Company for maintenance purposes or for implementation of a customer order for a change in service arrangements;

G. That occurs or continues due to the Customer's failure to authorize the replacement of any element of special construction; and

H. That was not reported to the Company within of (30) days of the date that thirty service was affected.

2.5.3 USE OF ANOTHER MEANS OF COMMUNICATIONS

If the Customer elects to use another means of communications during the period of interruption, the Customer must pay the charges for the alternative service used.

2.5.4 APPLICATIONS OF CREDIT FOR INTERRUPTIONS OF SERVICE

In case of an interruption to any service, allowance for the period of interruption, if not due to the negligence of the Customer, shall be as follows:

A. For Switched Access Service, no credit shall be allowed for an interruption of less than 24 hours. The Customer shall be credited for an interruption of 24 hours or more at the rate of 1/30 of (a) any applicable monthly rates or (b) the assumed minutes of use charge for each period of 24 hours or major fraction thereof that the interruption continues.

B. The credit allowance(s) for an interruption or for a series of interruptions shall not exceed (a) any applicable monthly rates or (b) the assumed minutes of use charge for the service interrupted in any one monthly billing period.

PUBLIC SERVICE COMMISSION
OF KENTUCKY
EFFECTIVE
3/1/2008
PURSUANT TO 807 KAR 5:011
SECTION 9 (1)
By Stephanie Stumbo
Executive Director

2.6 PRIVACY RULES

Automatic Number Identification (ANI) derived information may be used only for billing, routing, screening, ensuring network performance, completing calls or performing services directly related to the telephone caller's original call or transaction. Therefore, should the business that receives ANI information have an established customer relationship with the caller, the business may offer products or services to the caller that are directly related to the products or services previously purchased by the caller. The business that receives ANI information may not establish marketing lists or conduct ongoing market calls for unrelated products or services or sell the information derived from ANI (caller's name, address, telephone billing number, purchasing habits, etc.) to third parties unless it gets the prior written consent of the caller.

2.7 APPLICATIONS OF RATES AND CHARGES

The regulations set forth in this section govern the application of rates for services contained in other sections of this Tariff.

2.7.1 MEASURING ACCESS MINUTES

Customer traffic to End Offices will be measured (i.e., recorded or assumed) by the Company at End Office switches. Originating and terminating calls will be measured (i.e., recorded or assumed) by the Company to determine the basis for computing chargeable access minutes. In the event the Customer message detail is not available because the Company lost or damaged media or experienced recording system outages, the Company will estimate the volume of lost customer access minutes of use based on previously known values. Access minutes will be recorded to the nearest one second for any particular call. Access minutes or fractions thereof are accumulated over the billing period for each End Office and are then rounded up to the nearest access minute for each end office.

For originating calls over Feature Group D, usage measurement begins when the originating Feature Group D switch receives the first wink supervisory signal, or its equivalent, forwarded from the Customer's point of termination.

The measurement of originating call usage ends when the originating Feature Group D switch receives disconnect supervision from either the originating end user's end office, indicating the originating end user has disconnected, or the Customer's point of termination, whichever is recognized first by the switch.

For terminating calls over Feature Group D, the measurement of access minutes begins when the terminating Feature Group D switch receives answer supervision from the terminating end user's end office, indicating the terminating end user has answered.

The measurement of terminating call usage over Feature Group D ends when the terminating Feature Group D switch receives disconnect supervision from either the terminating end user's end office, indicating the terminating end user has disconnected, or the Customer's point of termination, whichever is recognized first by the switch.

PUBLIC SERVICE COMMISSION
OF KENTUCKY
EFFECTIVE
3/1/2008
PURSUANT TO 807 KAR 5:011
SECTION 9 (1)
By Stephanie Stumbo
Executive Director

2.7.2 RATES BASED UPON DISTANCES

Where the charges for service are specified based upon distance, the following rules apply:

A. Distance between two points is measured as airline distance between the wire centers of the originating and terminating telephone lines. The wire center is a set of geographic coordinates, as referenced in National Exchange Carrier Association, Inc. (NECA) Tariff F.C.C. No. 4, associated with each NPA-NXX combination (where NPA is the area code and NXX is the first three digits of a seven-digit telephone number). Except that, until the National Exchange Carrier Association, Inc. Tariff F.C.C. No. 4 is revised to include certain Company wire centers, the airline distance should be determined utilizing the "V" (vertical) and "H" (horizontal) coordinates as set forth in any applicable Company tariffs on file with the FCC.

B. The airline distance between any two wire centers is determined as follows:

1. Obtain the "V' and "H" coordinates for each wire center from the above referenced NECA tariff.

2. Compute the difference between the "V' coordinates of the two wire centers; and the difference between the two "H" coordinates.

3. Square each difference obtained in step (2) above.

4. Add the square of the "V" difference and the square of the "H" difference obtained in step (3).

5. Divide the sum of the squares by 10. Round to the next higher whole number if any fraction is obtained.

6. Obtain the square root of the whole number result obtained above. Round to the next higher whole number if any fraction is obtained. This is the airline mileage.

C. The airline mileage is used to determine the Switched Access Service Common Mileage rates as set forth in Section 3.

2.7.3 NONRECURRING CHARGES

Nonrecurring charges are one-time charges that apply for a specific work activity (i.e., installation or service rearrangements).

A. Installation of Service

Nonrecurring charges apply to each Access Service installed. For Switched Services ordered on a per trunk basis, the charge is applied per trunk. For Switched Services ordered on a busy hour minutes of capacity basis, the charge is also applied on a per trunk basis but the charge applies only when the capacity ordered requires the installation of an additional trunk(s).

B. Service Rearrangements

PUBLIC SERVICE COMMISSION
OF KENTUCKY
EFFECTIVE
3/1/2008
PURSUANT TO 807 KAR 5:011
SECTION 9 (1)
By Stephanie Stumbo
Executive Director

All changes to existing services other than changes involving administrative activities only will be treated as a discontinuance of the existing service and an installation of a new service. The nonrecurring charge described in Section 2.7.3 A., preceding, will apply for this work activity. Moves that change the physical location of the point of termination are described below.

1. Moves Within the Same Building

When the move is to a new location within the same building, the charge for the move will be an amount equal to one half of the nonrecurring charge for the capacity affected. There will be no change in the minimum period requirements.

2. Moves to a Different Building

Moves to a different building will be treated as a discontinuance and start of service and all associated nonrecurring charges will apply. New minimum period requirements will be established for the new service. The Customer will also remain responsible for satisfying all outstanding minimum period charges for the discontinued service.

2.8 ACCESS SERVICE ORDER

2.8.1 ORDERING REQUIREMENTS

A. A Switched Access Service Order is used by the Company to provide a customer Switched Access Service. When placing an order for Switched Access Service, the Customer shall provide, at a minimum, the following information:

1. For Feature Group D Switched Access Service, the Customer may specify the number of busy hour minutes of capacity (BHMC) from the Customer's premises to the End Office by Feature Group and by traffic type. This information is used to determine the number of transmission paths. The Customer shall also specify the Common Transport and Local Switching options. Customers may, at their option, order FGD by specifying the number of trunks and the End Office when direct routing to the end office is desired and the Common Transport and Local Switching options desired. When a customer orders FGD in trunks, the Customer is responsible to assure that sufficient access facilities have been ordered to handle its traffic. When ordering by trunk quantities rather than BHMC quantities to an end office, the Customer must also provide the Company an estimate of the amount of traffic it will generate to and/or from each End Office to assist the Company in its own efforts to project further facility requirements.

PUBLIC SERVICE COMMISSION
OF KENTUCKY
EFFECTIVE
3/1/2008
PURSUANT TO 807 KAR 5:011
SECTION 9 (1)
By Stephanie Stumbo
Executive Director

2.8.2 ACCESS SERVICE ORDER INTERVALS

Access Services are provided with one of the following Service Date Intervals:

Negotiated Interval

Advance Order Interval

A. Negotiated Interval

The Company will negotiate a service date interval with the Customer. The Company will offer a service date based on the type and quantity of Access Services the Customer has requested. All services for which rates are applied on an individual case basis are provided with a Negotiated Interval.

The initial establishment of service where the Customer is:

MAXIMUM INTERVAL

Not yet provided with any FGD service in the LATA	6 Months
Provided FGD service in the LATA	90 Days

B. Advance Order Interval

When placing an Access Order, a customer may request an Advance Order Interval for a service date of 12 to 24 months from the Application Date for the following services:

A minimum of 24 voice grade equivalent Access Service lines or trunks or 720 BHMCs

Orders for less than the minimum quantities will be accommodated under Negotiated Interval provisions.

Advance Order Interval Access Orders are subject to all ordering conditions of Negotiated Interval Access Orders except for the following:

A nonrefundable Advance Payment will be calculated as follows:

The minimum monthly charge for the minimum period plus the applicable Nonrecurring Charges for the services ordered.

This Advance Payment is due 10 working days from the date the Company confirms acceptance of the order, or on the Application Date, whichever date is the later date. If the Advance Payment is not received by such payment date, the order will be canceled.

When the Access Services are connected on the service date, the Advance Payment will be applied, as a credit, to the Customer's billed service charges. When there has been a decrease in the number of services originally ordered, as described below, only the portion of the Advance Payment for services actually installed will be credited.

PUBLIC SERVICE COMMISSION
OF KENTUCKY
EFFECTIVE
3/1/2008
PURSUANT TO 807 KAR 5:011
SECTION 9 (1)
By Stephanie Stumbo
Executive Director

Cancellation or Partial Cancellation of an Advance Order Interval Access Order:

When the Customer cancels an Access Order, the order will be withdrawn. The Advance Payment will not be credited or refunded.

Any decrease in the number of ordered Access Services will be treated as a partial cancellation, and the portion of the Advance Payment for the services canceled will not be credited or refunded.

2.8.3 ACCESS ORDER MODIFICATIONS

The Customer may request a modification of its Access Order at any time prior to notification by the Company that service is available for the Customer's use or prior to the service date, whichever is later.

Any increase in the number of Access Service lines, trunks or busy hour minutes of capacity or CCSA signaling connections will be treated as a new Access Order (for the increased amount only).

A. Service Date Change Charge

Access Order service dates for the installation of new services or rearrangements of existing services may be changed, but the new service date may not exceed the original service date by more than 30 calendar days. When, for any reason, the Customer indicates that service cannot be accepted for a period not to exceed 30 calendar days, and the Company accordingly delays the start of service, a Service Date Change Charge will apply. If the Customer requested service date is more than 30 calendar days after the original service date, the order will be canceled by the Company and reissued with the appropriate cancellation charges applied.

A Service Date Change Charge will apply, on a per order, per occurrence basis, for each service date changed. The applicable charge is found in E., following.

B. Partial Cancellation Charge

Any decrease in the number of ordered Access Service lines, trunks or busy hour minutes of capacity ordered with a Negotiated Interval Access Order will be treated as a partial cancellation and the charges as set forth in F., following, will apply. Partial cancellation charges do not apply to Advance Order Interval Access Orders.

C. Design Change Charge

The Customer may request a design change to the service ordered. A design change is any change to an Access Order which requires engineering review. Design changes do not include a change of customer premises, end user premises, end office switch, or Feature Group type except for changes to Feature Group D. Changes of this nature will require the issuance of a new order and the cancellation of the original order with appropriate cancellation charges applied.

The Design Change Charge will apply on a per order, per occurrence basis, for each order requiring a design change. The applicable charge is found in E., following.

PUBLIC SERVICE COMMISSION
OF KENTUCKY
EFFECTIVE
3/1/2008
PURSUANT TO 807 KAR 5:011
SECTION 9 (1)
By Stephanie Stumbo
Executive Director

If a change of service date is required, the Service Date Change Charge will also apply.

D. Expedited Order Charge

When placing an Access Order for service(s), a customer may request a service date that is prior to the service date that has been negotiated by the Company and the Customer. A customer may also request an earlier service date on a pending Negotiated or Advance Order Interval Access Order. If the Company agrees to provide service on an expedited basis, an Expedited Order Charge will apply.

If the Company receives a request for an expedited service date at the time an Access Order is placed, the Expedited Order Charge is calculated by summing all the nonrecurring charges associated with the order and then dividing this total by the number of days in the negotiated service period. The charge is then applied on a per day of improvement basis, per order, but in no event shall the charge exceed fifty percent of the total nonrecurring charges associated with the Access Order.

E. Order Charges

	NONRECURRING CHARGE
Partial Cancellation Charge, per order, per occurrence	$39.00
Design Change Charge, per order, per occurrence	$181.00
Service Date Change Charge, per order, per occurrence	$39.00

2.8.4 CANCELLATION OF AN ACCESS ORDER

A. A customer may cancel an Access Order for the installation of service at any time prior to notification by the Company that services available for the Customer's use or prior to the service date, whichever is later. The cancellation date is the date the Company receives written or verbal notice from the Customer that the order is to be canceled. The verbal notice must be followed by written confirmation within 10 days. If a Customer or an end user is unable to accept Access Service within 30 calendar days after the original service date, the Customer has the choice of the following options:

The Access Order shall be canceled and charges set forth in B., following will apply, or billing for the service will commence.

If no cancellation request is received within the specified 30 calendar days, billing for the service will commence. In any event, the cancellation date or the date billing is to commence, as applicable, shall be the 31st day beyond the original service date of the Access Order.

B. When a customer cancels a Negotiated Interval Access Order for the installation of service, a Cancellation Charge will apply as follows:

1. When the Customer cancels an Access Order, a charge equal to the estimated provisioning costs incurred at a particular date for the service ordered by the Company shall apply.

PUBLIC SERVICE COMMISSION
OF KENTUCKY
EFFECTIVE
3/1/2008
PURSUANT TO 807 KAR 5:011
SECTION 9 (1)
By Stephanie Stumbo
Executive Director

2. If the Company misses a service date for a Negotiated Interval Access Order by more than 30 days, due to circumstances such as acts of God, governmental requirements, work stoppages and civil commotions, the Customer may cancel the Access Order without incurring cancellation charges.

2.8.5 MINIMUM PERIOD

A. The minimum period for which Switched Access Service is provided and for which charges are applicable, is three months.

B. The following changes will be treated as a discontinuance of the existing service and an installation of a new service. A new minimum period will be established. All associated nonrecurring charges will apply for the new service.

1. A move to a different building.

2. A change in type of service.

3. A change in Switched Access Service Interface Group.

4. Change in Switched Access Service traffic type.

2.8.6 MINIMUM PERIOD CHARGE

When Access Service is disconnected prior to the expiration of the minimum period, charges are applicable for the balance of the minimum period.

The Minimum Period Charge for monthly billed services will be determined as follows:

A. All unpaid Nonrecurring Charges reasonably expended by Company to establish service to Customer, plus;

B. Any disconnection, early cancellation or termination charges reasonably incurred and paid to third parties by Company on behalf of Customer, plus;

C. All Recurring Charges specified in the applicable Service Order for the balance of the then current minimum period;

D. Minus a reasonable allowance for costs avoided by the Company as a direct result of Customer's cancellation.

In addition to the Minimum Period Charge, Termination Liabilities may apply, as set forth elsewhere, for those services ordered under Term Agreements.

PUBLIC SERVICE COMMISSION
OF KENTUCKY
EFFECTIVE
3/1/2008
PURSUANT TO 807 KAR 5:011
SECTION 9 (1)
By Stephanie Stumbo
Executive Director

2.9 SPECIAL CONSTRUCTION

All rates and charges quoted herein provide for furnishing of facilities when the suitable facilities are available or where the design or construction of the necessary facilities does not involve unusual costs.

When, at the request of the Customer, the Company designs and/or constructs facilities that it would otherwise not construct, or the construction of such facilities involves a greater expense than would otherwise be incurred, Special Construction nonrecurring charges may apply.

PUBLIC SERVICE COMMISSION
OF KENTUCKY
EFFECTIVE
3/1/2008
PURSUANT TO 807 KAR 5:011
SECTION 9 (1)
By Stephanie Stumbo
Executive Director

3. SWITCHED ACCESS SERVICE

3.1 GENERAL

Switched Access Service, which is available to Customers for their use in furnishing their services to end users, provides a two-point communications path between a Customer's premises and an end user's premises. It provides for the use of common terminating, switching and trunking facilities. Switched Access Service provides for the ability to originate calls from an end user's premises to a customer's premises, and to terminate calls from a customer's premises to an end user's premises in the LATA where it is provided. Switched Access Service must be ordered separately for each LATA in which the Customer desires to originate or terminate calls.

3.2 PROVISION AND DESCRIPTION

Switched Access Service is provided in two service categories of standard and optional features called Feature Groups. The Company provides Feature Group D originating and terminating Switched Access. The service categories are differentiated by their technical characteristics and the manner in which an end user accesses them when originating calls. Terminating Calling permits the delivery of calls from the customer's premises to telephone exchange service locations. Originating Calling permits the delivery of calls from telephone exchange service locations to the customer's premises. Two-way Calling permits the delivery of calls in both directions, but not simultaneously.

3.2.1 FEATURE GROUP D

FG D Access, which is available to all customers, provides trunk side access to Company End Office switches with an associated uniform 10XXX access code for the Customer's use in originating and terminating communications. No access code is required for calls to a customer over FG D if the end user's telephone exchange service is arranged for pre-subscription to that customer.

3.2.2 8XX TOLL-FREE ACCESS SERVICE

8XX Toll-Free Access Service is a service offering utilizing originating trunk side Switched Access Service. The service provides for the forwarding of end user dialed 8XX calls to a Company Service Switching Point which will initiate a query to the data base to perform the Customer identification and delivery function. The call is forwarded to the appropriate customer based on the dialed 8XX number.

3.2.3 TRAFFIC TYPES

The major traffic types are originating and terminating. When ordering capacity for FGD access, the customer must at a minimum specify such access capacity in terms of originating traffic type and/or terminating traffic type. Originating Traffic represents access capacity within a LATA for carrying traffic from the end user to the customer. Terminating Traffic represents access capacity within a LATA for carrying traffic from the customer to the end user.

PUBLIC SERVICE COMMISSION
OF KENTUCKY
EFFECTIVE
3/1/2008
PURSUANT TO 807 KAR 5:011
SECTION 9 (1)
By Stephanie Stumbo
Executive Director

3.3 SWITCHED ACCESS RATE CATEGORIES

There are four rate categories that apply to Switched Access Service:

Carrier Common Line

Common Transport (includes Transport Facility, Transport Mileage, and Interconnection Charge)

End Office/Local Switching

8XX Toll-Free Access Service

The following diagram depicts a generic view of the components of Switched Access Service and the manner in which the components are combined to provide a complete access service.

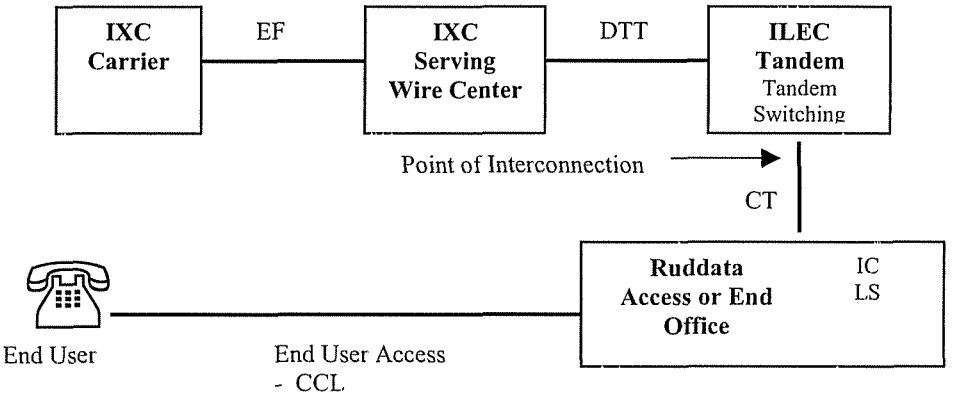

ILEC bills:
EF - Entrance Facility
DTT - Direct Trunk Transport (if to ILEC tandem)
Tandem Switching

Ruddata bills:
CT - Common Transport
IC - Interconnection Charge
LS - End Office/Local Switching
CCL - Carrier Common Line

A. Carrier Common Line

The Carrier Common Line rate category provides for the use of Company common lines by customers for access to end users to furnish customer interstate communications.

1. Limitations

a. A telephone number is not provided with Carrier Common Line.

b. Detail billing is not provided for Carrier Common Line.

PUBLIC SERVICE COMMISSION
OF KENTUCKY
EFFECTIVE
3/1/2008
PURSUANT TO 807 KAR 5:011
SECTION 9 (1)
By Stephanie Stumbo
Executive Director

c. Directory listings are not included in the rates and charges for Carrier Common Line.

d. Intercept arrangements are not included in the rates and charges for Carrier Common Line.

e. All trunk side connections provided in the same combined access group will be limited to the same features and operating characteristics.

2. Rate Regulations

Where the Customer is provided with Switched Access Service under this Tariff, the Company will provide the use of Company common lines by a Customer for access to end users at rates and charges as set forth in 3.4, following.

a. The Carrier Common Line charges will be billed per access minute to each Switched Access Service customer.

b. When the Customer reports interstate and intrastate use of Switched Access Service, the Carrier Common Line charges herein will be billed only to intrastate.

c. All Switched Access Service provided to the Customer will be subject to Carrier Common Line charges.

B. Common Transport

The Common Transport rate category provides for transmission facilities between the Company's End Office and Incumbent Local Exchange Carrier's tandem network.

1. Transport Facility. The Transport Facility element includes the non-distance sensitive portion of Switched Transport and is assessed on a per-access-minute-of-use basis.

2. Transport Mileage. The Transport Mileage element includes the distance sensitive portion of Switched Transport and is assessed on a per-access-minute-of-use-per-mile basis.

3. Interconnection Charge. The Interconnection Charge shall be assessed upon all Customers interconnecting with the Company's switched access network. Interconnection is applicable to all switched access originating and terminating minutes of use.

4. Dedicated End Office Trunk Port—Provides for the termination of Direct Trunked Transport Trunks at an end office. Dedicated Tandem Trunk Port provides for the termination of a voice frequency transmission path into the Serving Wire Center's side of an access tandem.

PUBLIC SERVICE COMMISSION
OF KENTUCKY
EFFECTIVE
3/1/2008
PURSUANT TO 807 KAR 5:011
SECTION 9 (1)
By Stephanie Stumbo
Executive Director

5. Direct-Trunked Transport The Direct-Trunked Transport provides the transmission path from the serving wire center of the Customer's premises to an end office or as an option from the SWC to a tandem. This transmission path is dedicated to the use of a single Customer. The Direct-Trunked Transport rate category is comprised of a monthly fixed rate and a monthly per mile rate based on the facility provided. The fixed rate provides the circuit equipment at the ends of the transmission links. The per mile rate provides the transmission facilities, including intermediate transmission circuit equipment, between the end points of the circuit. The Direct-Trunked Transport rate is the sum of the fixed rate and the per mile rate. For purposes of determining the per mile rate, mileage shall be measured as airline mileage between the serving wire center of the Customer's premises and the end office or directly to the access tandem using the V&H coordinates method.

6) Common Switched Transport. Common Switched Transport is comprised of two rate elements. The two rate elements are as follows: (a) The Local Transport Termination rate provides for that portion of the voice frequency transmission path at the end office and at the Customer's premises, and (b) The Local Transport Facility rate provides for that portion of the voice frequency transmission path between the end office and at the Customer's premises.

C. End Office/Local Switching

The End Office/Local Switching rate category provides the local end office switching and end user termination functions necessary to complete the transmission of Switched Access communications to and from the end users served by the Company's End Office.

The End Office/Local Switching rates are set forth in Section 3.4, following.

D. 8XX Toll-Free

The 8XX Toll-Free Access Service Query Charge applies for the identification of the appropriate customer and the delivery of the dialed 8XX ten-digit number. The charge is assessed to the customer on a per query basis and may include an area of service which may range from a single NPA/NXX to an area consisting of any areas served by the Company. The Customer Identification and Delivery Charge as set forth in 3.4, following, applies.

All appropriate Switched Access rate elements apply to 8XX Toll-Free Access Service.

PUBLIC SERVICE COMMISSION
OF KENTUCKY
EFFECTIVE
3/1/2008
PURSUANT TO 807 KAR 5:011
SECTION 9 (1)
By Stephanie Stumbo
Executive Director

3.4 SWITCHED ACCESS RATES AND CHARGES - KENTUCKY

A.	Service Implementation	
		NONRECURRING CHARGE
	1. Installation Charge, per location, per order	ICB
B.	Carrier Common Line	PER MINUTE OF USE
	Originating per minute charge	$0.00
	Terminating per minute charge	0.00
C.	Switched Access Transport	
	Common Transport Facility	
	Originating per minute charge	0.01
	Terminating per minute charge	0.01
	Transport Mileage, per mile	
	Originating per minute per mile charge	0.00
	Terminating per minute per mile charge	0.00
	Interconnection Charge	
	Originating	0.01
	Terminating	0.01
D.	End Office Local Switching	
	Originating	0.04
	Terminating	0.04
E.	Entrance Facility	ICB
F.	Direct-Trunked Transport, Per DS1	ICB
G.	Dedicated Trunk Port, per DS-0 trunk on DS1 port	$6.00 MONTHLY $250.00 NONRECURRING
H.	8XX Toll-Free Access Service Query Charge	.004

PUBLIC SERVICE COMMISSION
OF KENTUCKY
EFFECTIVE
3/1/2008
PURSUANT TO 807 KAR 5:011
SECTION 9 (1)

By Stephanie Stumbo
Executive Director