August 29, 2011

RECEIVED
AUG 31 2011
PUBLIC SERVICE
COMMISSION

Executive Director
Kentucky Public Service Commission
211 Sower Boulevard
Post Office Box 615
Frankfort, KY 40602

Re: Center Ridge Water District Case No. 2010-00397 – Rehearing Request

Dear Sirs:

Center Ridge has received the Commission's Final Order dated August 11, 2011 approving a new water rate of $22.29, and hereby respectfully requests a rehearing in this case. By law, upon rehearing a party may offer additional evidence that could not with reasonable diligence have been offered in the original case process. Center Ridge is requesting a rehearing for the Commission to consider additional evidence in three respects, and believes this additional evidence could not reasonably have been provided in the original case for reasons as noted below. These three issues are as follows:

Recent costs mandated by the Kentucky Division of Water ("DOW") – Center Ridge recently received a report from the DOW requiring it to install certain chlorinating equipment in its system. Center Ridge is being required to install this equipment without delay, and this requirement and these costs were unknown throughout most of the rate case process. Therefore, Center Ridge respectfully requests that the Commission grant rehearing to immediately include these added costs in rates, especially since Center Ridge lacks the cash flow to absorb these costs. Each chlorinator costs $450.50, and 6 are needed, resulting in a materials cost of $2,703. The installation labor would be $150 for each of the 6 chlorinators, or $900, for a total cost of $3,603. This cost is expected to be incurred annually because the chlorinators have only a 12-month warranty and tend to fail shortly after the warranty expires.

Transportation Expense Errors – Center Ridge is intimately familiar with the local roads traveled to service its four water systems on a daily basis. In establishing transportation expense at $12,965, the Commission included only a daily mileage of 64 miles based on Appendix B of its Order. Appendix B appears to have been based upon an incorrect Internet driving distance calculation. Specifically, at least one of the roads included in this calculation – Hillcrest Lane - does not even exist, and other roads are dirt-lane and not easily traveled by normal vehicles.

In addition, the Commission did not allow mileage for the travel associated with dropping off water samples from each of the four systems to McCoy and McCoy

Lab facilities at either Hardin or Paducah, and these trips occur at least twice monthly. To prove these trips, Center Ridge has included herein copies of "Chain of Custody" documents. Moreover, the Commission allowed no mileage for the considerable travel associated with finding water leaks when they occur, picking up supplies, and other utility-related travel.

To correct these errors, Center Ridge respectfully requests that the Commission allow transportation expense of $5,368 based upon additional yearly mileage of 9,760 miles times 55 cents per mile, as follows:

Category	Miles per trip	Trips per year	Totals
Daily Visits – PSC allowance of 64 miles is off by 0.4 miles per day due to Internet errors.	0.4 miles round-trip	365	146 miles
Daily visits – 1 mile per day per system – chlorine checks required by DOW out in the field in each distribution system.	4 miles each day	365	1,460 miles
Laboratory Visits – required sampling is done twice a month at each system, and samples are then taken to an outside lab.	130 miles round-trip	24	3,120 miles
Other – Conservative estimate -Leak repairs (53 leaks in 2009) -PSC and DOW Inspections	30 miles	53	1,590 miles
Other – trips to Murray once a week for bank visits.	36 miles	52	1,872
24 trips to Murray Supply and Lowes for plumbing supplies	36 miles	24	864
8 trips to New Concord US Post Office	8 miles	12	96
5 trips to Murray Walmart for printer ink.	36 miles	5	180
12 trips to pay multiple electric bills	36 miles	12	432
Subtotal			3,444 miles
		2009 Total	9,760 miles

Retainer Arrangement – Recent issues with the PSC, including not only this rate case but also a failed PSC Staff rate case assistance process, have made it painfully clear to Center Ridge that it lacks the staff resources, time, and expertise to successfully document and justify its considerable expenses to the PSC. Because adequate revenues and rates are critical to Center Ridge's survival, it wishes to enter into a retainer arrangement costing $250 per month (or $3,000 per year) with Kentucky Small Utility Consulting to provide ongoing financial, regulatory and strategic advice and assistance. This contract cost is minimal compared to the expense of having in-house expertise, and the Commission has recently approved a similar arrangement for ratemaking purposes for Ridgelea Investments, Inc. This cost was not foreseen only a few

months ago, prior to the issuance of a PSC Staff Report recommending a rate reduction instead of a rate increase. It was only through extraordinary and unusual steps taken by the Commission and certain PSC Staff – and Center Ridge appreciates the additional effort expended in this regard - that this highly unfavorable recommendation was avoided at the eleventh hour, and Center Ridge wishes to avoid this type of process and potential result in the future. Center Ridge therefore respectfully requests that the Commission include this cost in rates at this time.

Sincerely,

William Duncan

William Duncan, President
Center Ridge Water District, Inc.

Proposed
Retainer
for
Consulting

RECEIVED
AUG 31 2011
PUBLIC SERVICE
COMMISSION

Jack Kaninberg
Kentucky Small Utility Consulting, LLC
13005 Middletown Industrial Blvd., Suite J
Louisville, KY 40243
Business Phone (502) 671-0214
Cell Phone (502) 554-7541

August 22, 2011

Mr. William Duncan, President
Center Ridge Water District
69 Marguerite Blvd.
New Concord, KY 42036

Dear Bill:

As you know, the recent rate case process has proven to be extraordinarily difficult for Center Ridge Water District. In addition to requesting PSC Staff rate case assistance a few years ago and then receiving a delayed and unsatisfactory result, Center Ridge also experienced the real threat of a rate reduction in Case No. 2010-00397, before the PSC ultimately approved a monthly water rate of $22.29. In both processes, the Commission questioned the documentation available to support operating expenses. To better address these issues, and given Center Ridge's critical need for adequate revenues to provide safe and reliable water service, I am hereby proposing a retainer arrangement priced at $250 per month to provide ongoing assistance to Center Ridge Water District. The Commission has approved a similar retainer arrangement for ratemaking purposes for Ridgelea Investments sewer system in Case No. 2009-00500, and your situation is very similar to Ridgelea's, especially because both utilities lack the staff resources to address ongoing regulatory issues.

In general terms, my assistance would include strategic, financial, and regulatory planning and assistance to help ensure that Center Ridge has the financial resources it needs. This would include, but is not limited to, the following:

-Improved recordkeeping, increased documentation and justification of expenses.
-Regulatory assistance on a frequent basis with the PSC (and maybe DOW).
-Annual and Gross Revenue Reports to the PSC due annually by March 31.
-Financial Analysis and Financial Planning related to rate increases.
-Strategic planning related to Center Ridge and each of its four systems.
-Bookkeeping assistance in accordance with PSC regulatory requirements.
-Computerized preparation of a general ledger based upon Center Ridge's checkbook.
-Assistance in filing a rehearing request in PSC Case 2010-00397.
-A monthly meeting, if desired, in the Center Ridge area to discuss financial and other issues of importance with the utility.

-Other duties as mutually agreed to in writing between us.

I hope this proposal is suitable to you, but if you have any questions or concerns, please don't hesitate to contact me at (502) 671-0214 to discuss it.

Sincerely,

Jack Kaninberg

2011

division of water

Survey Report

RECEIVED
AUG 31 2011
PUBLIC SERVICE
COMMISSION

STEVEN L. BESHEAR
GOVERNOR

LEONARD K. PETERS
SECRETARY

ENERGY AND ENVIRONMENT CABINET
DEPARTMENT FOR ENVIRONMENTAL PROTECTION
DIVISION OF WATER
200 FAIR OAKS LANE, 4TH FLOOR
FRANKFORT KENTUCKY 40601
www.kentucky.gov

August 4, 2011

William M Duncan
Center Ridge Water System
69 Marguerite Blvd
New Concord, KY 42076

RE: AI: 33828
PWSID: KY0180549
Drinking Water Sanitary Survey

Dear Mr. Duncan:

The Division of Water conducted a Drinking Water Sanitary Survey (attached) of Center Ridge Water System on July 14 and 21, 2011. A Capacity Development assessment was done as part of the survey.

Significant Deficiencies (written response within 30 days must address deficiencies as resolved or provide a corrective action plan; September 3, 2011)

- Well is not properly sealed. Proper seal needs to be installed.

Non Significant (written response within 90 days must address deficiencies as resolved or provide a corrective action plan; November 2, 2011)

- System is missing the following records: BacT 2006 and 2007, Chlorine 2001 and 2002, Nitrate 2002, SEC 2002, Secondary 2002
- System shall compile existing data and records into an Operation & Maintenance manual.
- Wellhead Protection Plan needs to be updated..
- Groundwater Protection Plan needs to be developed.
- A screened vent that points downward needs to be installed at or above the top of the casing of the well.
- Raw water tap needs to be installed.

The Division Recommends:

- Contracting or hiring more certified operators in case of emergencies, sick days, or vacations.
- Developing a strategic plan with a mission statement, goals and objectives.
- Reviewing its insurance coverage for liability, property, etc.
- Compiling existing records into an asset management program.
- Documenting their existing verbal preventive maintenance plan and capital improvement plan.
- Notifying customers prior to performing scheduled maintenance.
- Evaluating both their rates and how they charge their customers to better reflect the cost of producing water. The system should install new meters to better track water usage.
- Acquiring new generators so each plant has access to a back-up generator in case of power loss.
- Obtaining proper chlorine containers, these were not available for inspection at the time of the sanitary survey. Chlorine must be NSF or United Laboratories certified. Verify NSF certification at http://www.nsf.org/Certified/PwsChemicals/.

- Implementing redundancyfor the chlorine lines and cooling the facility. There is a history of air locks in the chlorine feed line at the Center Ridge facilities. When liquid chlorine heats up it gases off and can cause an air lock in the line. The feeder is checked everyday, but if an air lock occurs it is possible for many hours to pass with no chlorine being fed to the system before being detected. At this time it is recommended that reducdancy be installed and consider cooling the facility.
- Using the 50-24-25 method for sterilizing new mains/main breaks.

All deficiency responses should be sent to the attention of Noah Taylor, Compliance and Technical Assistance Branch, Division of Water, 200 Fair Oaks Lane, 4th Floor, Frankfort, KY 40601 (phone 502/564-8158, extension 4978).

Assistance with the "Managerial and Financial Assessment" section of the sanitary survey for Center Ridge Water System can be obtained by contacting Jennifer Spradlin in the Water Infrastructure Branch at 502/564-3410 extension 4030

If you have any questions regarding the "Technical Inspection" portion, contact Jackie Logsdon in the Madisonville Regional Office at 270/824-7529.

Sincerely,

Noah Taylor

Noah Taylor
Sanitary Survey Coordinator
Division of Water

C: Morehead Regional Office

STEVEN L. BESHEAR
GOVERNOR

LEONARD K. PETERS
SECRETARY

ENERGY AND ENVIRONMENT CABINET
DEPARTMENT FOR ENVIRONMENTAL PROTECTION
DIVISION OF WATER
200 FAIR OAKS LANE, 4TH FLOOR
FRANKFORT KENTUCKY 40601
www.kentucky.gov

August 4, 2011

William M Duncan
Center Ridge Water System
69 Marguerite Blvd
New Concord, KY 42076

RE: AI: 33828
PWSID: KY0180549
Drinking Water Sanitary Survey

Dear Mr. Duncan:

The Division of Water conducted a Drinking Water Sanitary Survey (attached) of Center Ridge Water District #2 on July 14 and 21, 2011. A Capacity Development assessment was done as part of the survey.

Non Significant (written response within 90 days must address deficiencies as resolved or provide a corrective action plan; November 2, 2011)

- System is missing the following records: BacT 2006 and 2007, Chlorine 2001 and 2002, Nitrate 2002, Secondary 2002.
- System shall compile existing data and records into an Operation & Maintenance manual.
- Wellhead Protection Plan needs to be updated.
- Groundwater Protection Plan needs to be developed.
- A screened vent that points downward needs to be installed at or above the top of the casing of the well.
- Raw water tap needs to be installed.

The Division Recommends:

- Contracting or hiring more certified operators in case of emergencies, sick days, or vacations.
- Developing a strategic plan with a mission statement, goals and objectives.
- Reviewing its insurance coverage for liability, property, etc.
- Compiling existing records into an asset management program.
- Documenting their existing verbal preventive maintenance plan and capital improvement plan.
- Notifying customers prior to performing scheduled maintenance.
- Evaluating both their rates and how they charge their customers to better reflect the cost of producing water. The system should install new meters to better track water usage.
- Acquiring new generators so each plant has access to a back-up generator in case of power loss.
- Obtaining proper chlorine containers, these were not available for inspection at the time of the sanitary survey. Chlorine must be NSF or United Laboratories certified. Verify NSF certification at http://www.nsf.org/Certified/PwsChemicals/.
- Implementing redundancyfor the chlorine lines and cooling the facility. There is a history of air locks in the chlorine feed line at the Center Ridge facilities. When liquid chlorine heats up it gases off and can cause an air lock in the line. The feeder is checked everyday, but if an air lock occurs it is possible for many hours to pass with no chlorine being fed to the system before being detected. At this time it is recommended that reducdancy be installed and consider cooling the facility.

- Using the 50-24-25 method for sterilizing new mains/main breaks.

All deficiency responses should be sent to the attention of Noah Taylor, Compliance and Technical Assistance Branch, Division of Water, 200 Fair Oaks Lane, 4th Floor, Frankfort, KY 40601 (phone 502/564-8158, extension 4978).

Assistance with the "Managerial and Financial Assessment" section of the sanitary survey for Center Ridge Water System #2 can be obtained by contacting Jennifer Spradlin in the Water Infrastructure Branch at 502/564-3410 extension 4030

If you have any questions regarding the "Technical Inspection" portion, contact Jackie Logsdon in the Madisonville Regional Office at 270/824-7529.

Sincerely,

Noah Taylor
Sanitary Survey Coordinator
Division of Water

C: Paducah Regional Office

STEVEN L. BESHEAR
GOVERNOR

LEONARD K. PETERS
SECRETARY

ENERGY AND ENVIRONMENT CABINET
DEPARTMENT FOR ENVIRONMENTAL PROTECTION
DIVISION OF WATER
200 FAIR OAKS LANE, 4TH FLOOR
FRANKFORT KENTUCKY 40601
www.kentucky.gov

August 4, 2011

William M Duncan
Center Ridge Water System
69 Marguerite Blvd
New Concord, KY 42076

RE: AI: 33828
PWSID: KY0180549
Drinking Water Sanitary Survey

Dear Mr. Duncan:

The Division of Water conducted a Drinking Water Sanitary Survey (attached) of Center Ridge Water District #3 on July 14 and 21, 2011. A Capacity Development assessment was done as part of the survey.

Significant Deficiencies (written response within 30 days must address deficiencies as resolved or provide a corrective action plan; September 3, 2011)

- Well is not properly sealed. Proper seal needs to be installed.

Non Significant (written response within 90 days must address deficiencies as resolved or provide a corrective action plan; November 2, 2011)

- System is missing the following records: BacT 2006 and 2007, Chlorine 2001 and 2002, Nitrate 2002, Secondary 2002
- System shall compile existing data and records into an Operation & Maintenance manual.
- Wellhead Protection Plan needs to be updated..
- Groundwater Protection Plan needs to be developed.
- A screened vent that points downward needs to be installed at or above the top of the casing of the well.
- Raw water tap needs to be installed.

The Division Recommends:

- Contracting or hiring more certified operators in case of emergencies, sick days, or vactions.
- Developing a strategic plan with a mission statement, goals and objectives.
- Reviewing its insurance coverage for liability, property, etc.
- Compiling existing records into an asset management program.
- Documenting their existing verbal preventive maintenance plan and capital improvement plan.
- Notifying customers prior to performing scheduled maintenance.
- Evaluating both their rates and how they charge their customers to better reflect the cost of producing water. The system should install new meters to better track water usage.
- Acquiring new generators so each plant has access to a back-up generator in case of power loss.
- Obtaining proper chlorine containers, these were not available for inspection at the time of the sanitary survey. Chlorine must be NSF or United Laboratories certified. Verify NSF certification at http://www.nsf.org/Certified/PwsChemicals/.

- Implementing redundancyfor the chlorine lines and cooling the facility. There is a history of air locks in the chlorine feed line at the Center Ridge facilities. When liquid chlorine heats up it gases off and can cause an air lock in the line. The feeder is checked everyday, but if an air lock occurs it is possible for many hours to pass with no chlorine being fed to the system before being detected. At this time it is recommended that reducdancy be installed and consider cooling the facility.
- Using the 50-24-25 method for sterilizing new mains/main breaks.

All deficiency responses should be sent to the attention of Noah Taylor, Compliance and Technical Assistance Branch, Division of Water, 200 Fair Oaks Lane, 4th Floor, Frankfort, KY 40601 (phone 502/564-8158, extension 4978).

Assistance with the "Managerial and Financial Assessment" section of the sanitary survey for Center Ridge Water System #3 can be obtained by contacting Jennifer Spradlin in the Water Infrastructure Branch at 502/564-3410 extension 4030

If you have any questions regarding the "Technical Inspection" portion, contact Jackie Logsdon in the Madisonville Regional Office at 270/824-7529.

Sincerely,

E-Signed by Noah Taylor
VERIFY authenticity with ApproveIt

Noah Taylor
Sanitary Survey Coordinator
Division of Water

C: Paducah Regional Office

STEVEN L. BESHEAR
GOVERNOR

LEONARD K. PETERS
SECRETARY

ENERGY AND ENVIRONMENT CABINET
DEPARTMENT FOR ENVIRONMENTAL PROTECTION
DIVISION OF WATER
200 FAIR OAKS LANE, 4TH FLOOR
FRANKFORT KENTUCKY 40601
www.kentucky.gov

August 4, 2011

William M Duncan
Center Ridge Water System
69 Marguerite Blvd
New Concord, KY 42076

RE: AI: 33828
PWSID: KY0180549
Drinking Water Sanitary Survey

Dear Mr. Duncan:

The Division of Water conducted a Drinking Water Sanitary Survey (attached) of Center Ridge Water District #4 on July 14 and 21, 2011. A Capacity Development assessment was done as part of the survey.

Significant Deficiencies (written response within 30 days must address deficiencies as resolved or provide a corrective action plan; September 3, 2011)

- Well is not properly sealed. Proper seal needs to be installed.

Non Significant (written response within 90 days must address deficiencies as resolved or provide a corrective action plan; November 2, 2011)

- System is missing the following records: BacT 2006, Chlorine 2001 and 2002.
- System shall compile existing data and records into an Operation & Maintenance manual.
- Wellhead Protection Plan needs to be updated.
- Groundwater Protection Plan needs to be developed.
- A screened vent that points downward needs to be installed at or above the top of the casing of the well.
- Raw water tap needs to be installed.

The Division Recommends:

- Contracting or hiring more certified operators in case of emergencies, sick days, or vacations.
- Developing a strategic plan with a mission statement, goals and objectives.
- Reviewing its insurance coverage for liability, property, etc.
- Compiling existing records into an asset management program.
- Documenting their existing verbal preventive maintenance plan and capital improvement plan.
- Notifying customers prior to performing scheduled maintenance.
- Evaluating both their rates and how they charge their customers to better reflect the cost of producing water. The system should install new meters to better track water usage.
- Acquiring new generators so each plant has access to a back-up generator in case of power loss.
- Obtaining proper chlorine containers, these were not available for inspection at the time of the sanitary survey. Chlorine must be NSF or United Laboratories certified. Verify NSF certification at http://www.nsf.org/Certified/PwsChemicals/.
- Implementing redundancyfor the chlorine lines and cooling the facility. There is a history of air locks in the

chlorine feed line at the Center Ridge facilities. When liquid chlorine heats up it gases off and can cause an air lock in the line. The feeder is checked everyday, but if an air lock occurs it is possible for many hours to pass with no chlorine being fed to the system before being detected. At this time it is recommended that reducdancy be installed and consider cooling the facility.

- Using the 50-24-25 method for sterilizing new mains/main breaks.

All deficiency responses should be sent to the attention of Noah Taylor, Compliance and Technical Assistance Branch, Division of Water, 200 Fair Oaks Lane, 4th Floor, Frankfort, KY 40601 (phone 502/564-8158, extension 4978).

Assistance with the "Managerial and Financial Assessment" section of the sanitary survey for Center Ridge Water System #4 can be obtained by contacting Jennifer Spradlin in the Water Infrastructure Branch at 502/564-3410 extension 4030

If you have any questions regarding the "Technical Inspection" portion, contact Jackie Logsdon in the Madisonville Regional Office at 270/824-7529.

Sincerely,

Noah Taylor

Noah Taylor
Sanitary Survey Coordinator
Division of Water

C: Paducah Regional Office

RECEIVED
AUG 31 2011
PUBLIC SERVICE
COMMISSION

Information
on
Chlorine chemical pump

MURRAY SUPPLY CO. WHOLESALE ELEC. CO.
MURRAY RENTAL AND SALES CENTER
206-208 E. MAIN STREET
MURRAY, KY 42071-2184
PHONE: (270) 753-3331

PAGE NO 1

RETURNS MUST BE ACCOMPANIED BY RECEIPT
2% ADDITIONAL CHARGE ON PAST DUE ACCOUNT

CENTER RIDGE WATER DISTRICT
CASH ACCOUNT
49 MARGUERITE BLVD
NEW CONCORD KY 42076

CUST # 10042
TERMS: NET 10TH

INV # 842007
DATE: 7/19/11
CLERK: RYAN
TERM # 4

DUE DATE: 8/10/11

TIME: 7:19

****
* INVOICE *
****

QUANTITY	UM	ITEM	DESCRIPTION	SUG.PRICE	PRICE/PER	EXTENSION
1	EA	CFP111236	CFP1-115-30		425.00 /EA	425.00

#3 well

** PAYMENT RECEIVED **
** PAID IN FULL **

CHECK PAYMENT 450.50
CKN 1500 ABAR

TAXABLE	425.00
NON-TAXABLE	0.00
SUB-TOTAL	425.00
TAX AMOUNT	25.50
TOTAL INVOICE	450.50

X _____
RECEIVED BY

(Chemical Feed pump)

READ ALL CAUTIONS CAREFULLY BEFORE INSTALLING PUMP

SEE PAGE (4)

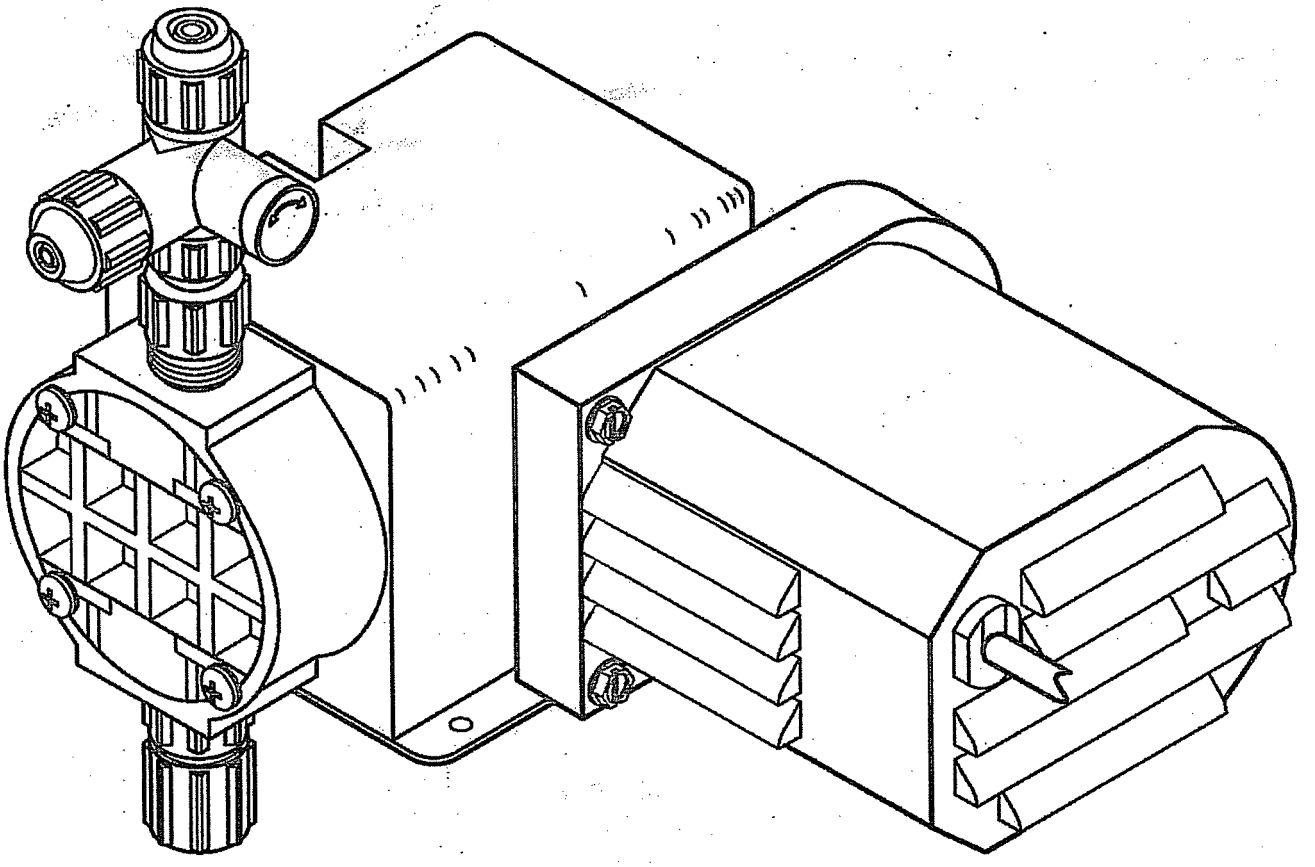

SERIES 100/150

INSTRUCTION MANUAL

P/N 32040
Rev A

CE

MANUFACTURER'S PRODUCT WARRANTY

The manufacturer warrants its equipment of its manufacture to be free of defects in material or workmanship. Liability under this policy extends for twenty-four (24) months from the date of purchase or one (1) year from date of installation or whichever comes first. The manufacturer's liability is limited to repair or replacement of any device or part which is returned, prepaid, to the factory and which is proven defective upon examination. This warranty does not include installation or repair cost and in no event shall the manufacturer's liability exceed its selling price of such part.

The manufacturer disclaims all liability for damage to its products through improper installation, maintenance, use or attempts to operate such products beyond their functional capacity, intentionally or otherwise, or any unauthorized repair. Replaceable elastomeric parts are expendable and are not covered by any warranty either expressed or implied. The manufacturer is not responsible for consequential or other damages, injuries or expense incurred through use of its products.

The above warranty is in lieu of any other warranty, either expressed or implied. The manufacturer makes no warranty of fitness or merchantability. No agent of ours is authorized to make any warranty other than the above.

For warranty and service matters within the European Union, contact the seller first or:

Pulsafeeder, Inc. Europe
Units 12 and 13, Edison Road
Highfield Industrial Estates
Eastbourne, East Sussex BN23 6PT

PRECAUTIONS FOR OPERATION

Each Series 100/150 chemical feeder has been tested to meet prescribed specifications and certain safety standards. However, a few precautionary notes should be adhered to at all times. THOROUGHLY READ ALL CAUTIONS PRIOR TO INSTALLING METERING PUMP.

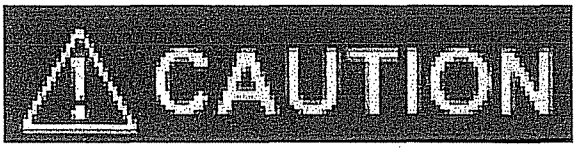

1. Protective fitting caps must be removed prior to installing tubing onto fitting assemblies.
2. Chemicals used may be dangerous and should be used carefully and according to warnings on the label. Follow the directions given with each type of chemical. Do not assume chemicals are the same because they look alike. Always store chemicals in a safe location away from children and others. We cannot be responsible for the misuse of chemicals being fed by the pump.
3. Always wear protective clothing (protective gloves and safety glasses) when working on or near chemical metering pumps.
4. Tampering with electrical devices can be potentially hazardous. Always place chemicals and feeder installation well out of the reach of children and others.
5. Be careful to check that the voltage of the installation matches the voltage indicated on the specification label. Each pump is equipped with a three prong plug. Whether plugging into a receptacle or wiring into a system, always be sure the feeder is grounded. If receptacle is utilized, to disconnect, do not pull wire but grip the plug with fingers and pull out.
6. Never repair or move the metering pump while operating. Always disconnect electrical current. Before handling the pump always allow sufficient time for the motor housing to cool off. Handling the pump too soon after shutdown may cause hand burns. For safety use protective gloves.
7. All pumps are pretested with water before shipment. Remove head and dry thoroughly if you are pumping a material that will react with water, (i.e. sulfuric acid). Valve seats, ball checks, gaskets, and diaphragm should also be dried. Before placing feeder into service, extreme care should be taken to follow this procedure.
8. Arrows on the pump head and injection fitting indicate chemical flow. When properly installed, these arrows should be pointing upward.
9. When metering hazardous material DO NOT use plastic tubing. Strictly use proper rigid pipe. Consult supplier for special adaptors.

2009

RECEIVED
AUG 31 2011
PUBLIC SERVICE
COMMISSION

Water Repairs

864782

STATEMENT

DATE: Feb 1-28 2009

TERMS:

TO: Center Ridge water dist

ADDRESS: 69 marguerite blvd
Newconcord, Ky 42076

IN ACCOUNT WITH: B.D TRUCKING & EXC.

date		Feb - Repairs	dist		Amt	
Wed	4	Ann MArie	3		400	00
Sun	15	Illinios Ave	1	XZ	400	00
Fri	20	Pine rock	2		400	00
Sat	28	South creek	4		400	00
					$	2,00000
		Total Amt owed			$	

adams DC5812

864781

STATEMENT

DATE: Jan 1-31 2009

TERMS: 1

TO: Center Ridge water dist

ADDRESS: 69 Marguerite blvd
NewConcord, Ky 42076

IN ACCOUNT WITH: B.D TRUCKING & EXC.

date		Jan - repairs	dist		Amt	
Tue	6	LAndmark crl	4		400	0
Sun	11	Stargrass	4	XZ	400	0
Thur	22	Terrace	1		400	0
Fri	30	MArlboro	2		400	0
				$	2,000	0
		Total Amt owed		$		

adams DC5812

864784

STATEMENT

DATE April - 1-30 2009

TERMS

TO Center Ridge water dist

ADDRESS 69 Marguerite blvd
Newconcord, Ky 42076

IN ACCOUNT WITH B.D. Trucking & Exc.

date		April-Repairs	dist		Amt
Fri	3	Cozy dr	1		400 00
Sun	5	Agnos blvd	3	X2	400 00
thur	14	Holly Hock	4		400 00
Tue	28	Tearose	2		400 00
Thur	30	Kinglet dr	4		400 00
		Total Amt owed		$	2,400 00

adams DC5812

864783

STATEMENT

DATE March 1-31 2009

TERMS

TO Center Ridge water dist

ADDRESS 69 marguerite blvd
Newconcord, Ky 42076

IN ACCOUNT WITH B.D Trucking & Exc.

date		march - repairs	dist		Amt
mon	2	Clayshire	2		400
Wed	11	Rose dr	1		400
Fri	20	Deercrest	4		400
Tue	24	Ridge rd	3		400
		Total Amt owed		$	1,600

adams DC5812

864785

STATEMENT

DATE: MAY 1-31 2009

TERMS:

TO: Center Ridge water dist

ADDRESS: 69 Marguerite blvd
Newconcord, Ky 42076

IN ACCOUNT WITH: B.D Trucking & Exc.

date		May - repairs	dist		Amt	
Sun	3	Ridge rd	3	xz	400	00
Fri	15	Dixie dr	1		400	00
Tue	19	Primerose	2		400	00
Sun	24	Richard Ln	1	xz	400	00
Sat	30	Cedar haven	4		400	00
		Total Amt owed		$	2800	00

adams DC5812

864786

STATEMENT

DATE: June 1-30 2009

TERMS:

TO: Center Ridge Water dist

ADDRESS: 69 Marguerite blvd
Newconcord, Ky 42076

IN ACCOUNT WITH: B.D Trucking & Exc.

date		June - Repairs	dist		Amt
Wed	3	Marlboro Ln	2		400
Fri	12	Cozy dr	1		400
Mon	22	clear View	4		400
thur	25	Blue pine	2		400
Tue	30	Greywolf	4		400
		Total Amt owed		$	2000

adams DC5812

864787

STATEMENT

DATE July 1-3 2009

TERMS

TO Center Ridge water dist

ADDRESS 69 marguerite blvd
newconcord, Ky 42076

IN ACCOUNT WITH B.D Trucking & EXC

date		July - repairs	dist		Amt	
Sat	4	Anne marie	3		400	00
sun	12	mussel Ln	2	xz	400	00
Fri	17	Daybreak	1		400	00
Tue	21	Deer Crest	4		400	00
thur	30	waterway Trl	3		400	00
		Total Amt owed		$	2,800	00

adams DC5812

864788

STATEMENT

DATE Aug 1-31 2009

TERMS

TO Center Ridge water dist

ADDRESS 69 marguerite blvd
newconcord, Ky 42076

IN ACCOUNT WITH B.D Trucking & EXC.

date		Aug - repairs	dist		Amt	
sun	2	woodlawn	4	xz	400	0
Fri	14	Lake point Ln	2		400	0
Sun.	16	plaza dr	1	xz	400	0
Thur	20	Keniana dr	3		400	0
mon	31	Parkview	3		400	0
		Total Amt owed		$	2,800	0

adams DC5812

864789

STATEMENT

DATE: Sept 1-30 2009

TERMS:

TO: Center Ridge water dist

ADDRESS: 69 Marguerite blvd
Newconcord, Ky 42076

IN ACCOUNT WITH: B.D. Trucking & Exc.

date		Sept - repairs	dist		Amt	
Fri	4	Parkside	1		400	00
wed	9	whisper dr w	1		400	00
thur	17	whisper dr E	1		400	00
sun	20	Creek View	4	x2	400	00
Fri	25	Kinglet dr	4		400	00
mon	28	Lake shore dr	2		400	00
mon	28	Lake point Ln	2		400	00
Tue	29	Lake shore	2		400	00
		Total Amt owed			$ 3600	00

adams DC5812

STATEMENT

DATE: Oct 1-31 2009

TERMS:

TO: Center Ridge water dist
69 Marguerite blvd
Newconcord, Ky 42076

IN ACCOUNT WITH: B.D Trucking

date		Oct - Repairs	dist		Amt	
Fri	2	Lakeshore	2		$ 400	00
Wed	7	Kinglet	4		$ 400	00
Thur	15	Lakepoint	2		$ 400	00
Sun	18	Gulview	1	x2	800	00
		Total Amt owed				

CURRENT	OVER 30 DAYS	OVER 60 DAYS	TOTAL AMOUNT

adams DC5812

273154

STATEMENT

DATE: NOV 1-30 2009

TERMS:

TO: Center Ridge water dist
69 marquerite blvd
Newconcord, Ky 42076

IN ACCOUNT WITH: B.D Trucking &

date		NOV - repairs	dist		Amt	
Thur	19	L Lakeshore dr	2	$	400	00
Wed	7	Kinglet	4	$	400	00
Thur	15	Lakepoint	2	$	400	00
Sun	18	Gulview	1	x2	800	00
		Totals Amt owed				

CURRENT	OVER 30 DAYS	OVER 60 DAYS	TOTAL AMOUNT	

adams DC5812

273155

STATEMENT

DATE: Dec 1-31 2009

TERMS:

TO: Center Ridge water dist
69 Marquerite blvd
Newconcord, Ky 42076

IN ACCOUNT WITH: B.D Trucking & Ext

date		Dec - repairs	dist		Amt	
Thur	2	L Lakeshore dr	2	$	400	00
Wed	7	NO Repairs	4	$	400	00
Thur	15	Lake Point	2	$	400	00
Sun	18	Gulview	1	x2	800	00
		Total Amt owed				

CURRENT	OVER 30 DAYS	OVER 60 DAYS	TOTAL AMOUNT	

adams DC5812

2009

Trips
To
Murray
For
Supplys.

RECEIVED
AUG 31 2011
PUBLIC SERVICE
COMMISSION

MURRAY SUPPLY COMPANY Inc.

753-3361
204-206 East Main
Murray, Kentucky 42071

WHOLESALE ELECTRIC SUPPLY CO.

2525

SOLD TO: Center Ridge Water System

SHIP TO:

DATE	TELEPHONE NO.	SOLD BY		TERMS: Accounts due 10th of month following date of purchase.	JOB
4/26/09			CASH / CHARGE / MDSE		

ORDERED	SHIPPED	DESCRIPTION	UNIT PRICE	DISCOUNT	AMOUNT
1		44677N029 3HP Pump.			
		L20P4HH-03 + P43B030A2-C			
		HRS Aug 08 Defective.			
		Arlene Elmore.			
		Center Ridge			

2% PER MONTH SERVICE CHARGE ON ACCOUNTS PAST DUE. THIS IS AN ANNUAL RATE OF 24%.

THANK YOU FOR THIS ORDER. WE LOOK FORWARD TO SERVING YOU AGAIN

PSS 6517

MERCHANDISE NOT RETURNABLE WITHOUT THIS SLIP

RECEIVED THE ABOVE IN GOOD CONDITION

MURRAY SUPPLY CO, WHOLESALE ELEC CO.
MURRAY RENTAL AND SALES CENTER
200-206 E. MAIN STREET

MURRAY, KY 42071-2194
PHONE: (270) 753-2361

PAGE NO 1

RETURNS MUST BE ACCOMPANIED BY RECEIPT
2% ADDITIONAL CHARGE ON PAST DUE ACCOUNT

CENTER RIDGE WATER DISTRICT
CASH ACCOUNT
281 MORRIS RD.
DEXTER KY 42036

CUST # 10042
TERMS: NET 10TH

INV # X00268
DATE : 1/02/09
CLERK: KAY
TERM # 4

DUE DATE: 2/10/09

TIME :12:00

****
* INVOICE *
****

QUANTITY	UM	ITEM	DESCRIPTION	SUG.PRIC	PRICE/PER	EXTENSION
12	EA	43121	2" MA SCH 40 PVC 436-020 05011	2.69	2.42 /EA	29.04

** PAYMENT RECEIVED **
** PAID IN FULL **

CHECK PAYMENT
CK# 749 ABAN

30.78	TAXABLE	29.04
	NON-TAXABLE	0.00
	SUB-TOTAL	29.04
30.78	TAX AMOUNT	1.74
	TOTAL INVOICE	30.78

X _____
RECEIVED BY

MURRAY SUPPLY CO.; WHOLESALE ELEC CO.
MURRAY RENTAL AND SALES CENTER
200-206 E. MAIN STREET
MURRAY, KY 42071-2194
PHONE: (270) 753-3361

PAGE NO 1

RETURNS MUST BE ACCOMPANIED BY RECEIPT
2% ADDITIONAL CHARGE ON PAST DUE ACCOUNT

CENTER RIDGE WATER DISTRICT
CASH ACCOUNT
281 MORRIS RD.
DEXTER KY 42036

CUST # 10042
TERMS: NET 10TH

INV # A00259
DATE : 1/02/09
CLERK: KAY
TERM # 3

DUE DATE: 2/10/09

TIME :11:36
****
* INVOICE *
****

QUANTITY	UM	ITEM	DESCRIPTION	SUB-UNIT	PRICE/PER	EXTENSION
3	EA	43141	2" TEE SCH 40 PVC 401-020 85411	4.27	3.86 /EA	11.58
3	EA	43109	2" CPL SCH 40 PVC 429-020 85211	2.49	2.24 /EA	6.72

** PAYMENT RECEIVED **
** PAID IN FULL **

CHECK PAYMENT
CK# 748 ABA#

19.40	TAXABLE	18.30
	NON-TAXABLE	0.00
	SUB-TOTAL	18.30
19.40	TAX AMOUNT	1.10
	TOTAL INVOICE	19.40

X _____
RECEIVED BY

MURRAY SUPPLY CO, WHOLESALE ELEC CO. PAGE NO 1

MURRAY RENTAL AND SALES CENTER
200-206 E. MAIN STREET
MURRAY, KY 42071-2184
PHONE: (270) 753-3361

RETURNS MUST BE ACCOMPANIED BY RECEIPT
2% ADDITIONAL CHARGE ON PAST DUE ACCOUNT

CENTER RIDGE WATER DISTRICT
CASH ACCOUNT
281 MORRIS RD.
DEXTER KY 42036

CUST # 10042
TERMS: NET 10TH

INV # A16166
DATE : 3/04/09
CLERK: PHIL
TERM # 4

DUE DATE: 4/10/09

TIME : 2:47

****
* INVOICE *
****

QUANTITY	UM	ITEM	DESCRIPTION	SUG. PRICE	PRICE/PER	EXTENSION
1	EA	40553N001	QT CLEANER 30005	12.99	11.69 /EA	11.69
1	EA	40559	PVC CMT CLR QT 31020	15.99	14.39 /EA	14.39
6	EA	43108	1-1/2 CPL SD 40 PVC 429015 85209	.99	.89 /EA	5.34
2	EA	42112	3/4" REPAIR COUPLING		4.19 /EA	8.38
2	EA	42114	1" REPAIR COUPLING		4.89 /EA	9.78
10	EA	41147	1 13/16", 2 3/4" 36 HOSE CLAMP		2.19 /EA	21.90
10	EA	41146	1-1/16 TO 2" ST STEEL CLAMP		1.79 /EA	17.90
10	EA	43912	HOSE CLAMP 3/4" TO 1 3/4" 20		1.79 /EA	17.90

** PAYMENT RECEIVED **
** PAID IN FULL **

CHECK PAYMENT
CK# 797 ABAN

113.72	TAXABLE	107.28
	NON-TAXABLE	0.00
	SUB-TOTAL	107.28
113.72	TAX AMOUNT	6.44
	TOTAL INVOICE	113.72

X _____
RECEIVED BY

MURRAY SUPPLY CO, WHOLESALE ELEC CO.
MURRAY RENTAL AND SALES CENTER
200-206 E. MAIN STREET
MURRAY, KY 42071-2184
PHONE: (270) 753-3361

PAGE NO 1

RETURNS MUST BE ACCOMPANIED BY RECEIPT
2% ADDITIONAL CHARGE ON PAST DUE ACCOUNT

CENTER RIDGE WATER DISTRICT
CASH ACCOUNT
281 MORRIS RD.
DEXTER KY 42036

CUST # 10042
TERMS: NET 10TH

INV # 064772
DATE : 4/27/09
CLERK: KEITH
TERM # 3

DUE DATE: 6/10/09

TIME : 2:52

****
* INVOICE *
****

QUANTITY	UM	ITEM	DESCRIPTION	SUG.PRICE	PRICE/PER	EXTENSION
1	EA	84677N029	3 HP 19 ST 230V PUMP L20P4HJ04		1297.00 /EA	*
			EXCHANGE FOR DEFECTIVE			
			WARRANTY EXPIRES 6/19/09			

TAXABLE	0.00
NON-TAXABLE	0.00
SUB-TOTAL	0.00
TAX AMOUNT	0.00
TOTAL INVOICE	0.00

X Liliane Elmore
RECEIVED BY

MURRAY SUPPLY CO. WHOLESALE ELEC CO.
MURRAY RENTAL AND SALES CENTER
200-206 E. MAIN STREET
MURRAY, KY 42071-2184
PHONE: (270) 753-3361

PAGE NO

RETURNS MUST BE ACCOMPANIED BY RECEIPT
2% ADDITIONAL CHARGE ON PAST DUE ACCOUNT

CENTER RIDGE WATER DISTRICT
CASH ACCOUNT
281 MORRIS RD.
DEXTER KY 42036

CUST # 10042
TERMS: NET 10TH

INV # A46835
DATE : 6/22/09
CLERK: ROBERT
TERM # 6

DUE DATE: 7/10/09

TIME : 4:13

****
* INVOICE *
****

QUANTITY	UM	ITEM	DESCRIPTION	[illegible]	PRICE/PER	EXTENSION
2	EA	31482	***SP 30AMP CIRCUIT BREAKER		5.29 /EA	10.58*

** PAYMENT RECEIVED **
** PAID IN FULL **

CHECK PAYMENT
CK# 887 ABA*

11.21	TAXABLE	10.58
	NON-TAXABLE	0.00
	SUB-TOTAL	10.58
11.21	TAX AMOUNT	0.63
	TOTAL INVOICE	11.21

X _____
RECEIVED BY

MURRAY SUPPLY CO, WHOLESALE ELEC CO.
MURRAY RENTAL AND SALES CENTER
200-206 E. MAIN STREET
MURRAY, KY 42071-2184
PHONE: (270) 753-3361

PAGE NO 1

RETURNS MUST BE ACCOMPANIED BY RECEIPT
2% ADDITIONAL CHARGE ON PAST DUE ACCOUNT

CENTER RIDGE WATER DISTRICT
CASH ACCOUNT
281 MORRIS RD.
DEXTER KY 42036

CUST # 10042
TERMS: NET 10TH

INV # A48698
DATE : 6/30/09
CLERK: JAMIE
TERM # 4

DUE DATE: 8/10/09

TIME :11:12
****
* INVOICE *
****

QUANTITY	UM	ITEM	DESCRIPTION	DISCOUNT	PRICE/PER	EXTENSION
20	EA	41146	1-1/16 TO 2" ST STEEL CLAMP		1.79 /EA	35.80
5	EA	41147	1 13/16", 2 3/4" 36 HOSE CLAMP		2.19 /EA	10.95
20	EA	43912	HOSE CLAMP 3/4" TO 1 3/4" 20		1.79 /EA	35.80

** PAYMENT RECEIVED **
** PAID IN FULL **

CHECK PAYMENT
CK# 904 ABA#

87.50	TAXABLE	82.55
	NON-TAXABLE	0.00
	SUB-TOTAL	82.55
87.50	TAX AMOUNT	4.95
	TOTAL INVOICE	87.50

X _____
RECEIVED BY

MURRAY SUPPLY CO, WHOLESALE ELEC CO.
MURRAY RENTAL AND SALES CENTER
200-206 E. MAIN STREET

MURRAY, KY 42071-2184
PHONE: (270) 753-3361

PAGE NO 1

RETURNS MUST BE ACCOMPANIED BY RECEIPT

2% ADDITIONAL CHARGE ON PAST DUE ACCOUNT

CENTER RIDGE WATER DISTRICT
CASH ACCOUNT
281 MORRIS RD.
DEXTER KY 42036

CUST # 10042
TERMS: NET 10TH

INV # A49261
DATE : 7/01/09
CLERK: VICTOR
TERM # 3

DUE DATE: 8/10/09

TIME :11:20

****
* INVOICE *
****

QUANTITY	UM	ITEM	DESCRIPTION	DISCOUNT	PRICE/PER	EXTENSION
6	EA	5294178	8X10 UTIL SHELF BRACKET-WHITE		1.39 /EA	8.34
1	EA	17071	RUST-STOP SPY SATIN WHT		4.99 /EA	4.99
2	EA	42112	3/4" REPAIR COUPLING		4.19 /EA	8.38
2	EA	45839	3/4" SLVNT PVC BALL VLVE PBVC12		5.19 /EA	10.38
1	EA	4064309	DP WEL AIR CONTRL 148540		20.99 /EA	20.99
6	EA	43145	1X3/4 BUSH SLIP 437-131 85743	.79	.711/EA	4.27
12	EA	43105	3/4 CPL SCH40 PVC 429007 85203	.39	.351/EA	4.21
12	EA	43129	3/4 45 SCH 40 PVC 417-007 85223	1.19	1.071/EA	12.85
12	EA	43123	3/4" 90 SC 40 PVC 406-007 85283	.45	.405/EA	4.86

** PAYMENT RECEIVED **
** PAID IN FULL **

CHECK PAYMENT 84.03
CK# 905 ABA#

TAXABLE	79.27
NON-TAXABLE	0.00
SUB-TOTAL	79.27
TAX AMOUNT	4.76
TOTAL INVOICE	84.03

X _____
RECEIVED BY

MURRAY SUPPLY CO, WHOLESALE ELEC CO. PAGE NO 1
MURRAY RENTAL AND SALES CENTER
200-206 E. MAIN STREET
MURRAY, KY 42071-2184
PHONE: (270) 753-3361

RETURNS MUST BE ACCOMPANIED BY RECEIPT
2% ADDITIONAL CHARGE ON PAST DUE ACCOUNT

CENTER RIDGE WATER DISTRICT
CASH ACCOUNT
281 MORRIS RD.
DEXTER KY 42036

CUST # 10042
TERMS: NET 10TH

INV # A52999
DATE : 7/14/09
CLERK: KAY
TERM # 3

DUE DATE: 8/10/09

TIME :12:49
****
* INVOICE *
****

QUANTITY	UM	ITEM	DESCRIPTION	DISCOUNT	PRICE/PER	EXTENSION
4	EA	10069N007	3833 PLUNGER NA		8.99 /EA	35.96
16	EA	3266624	PLUG FUSES 30AMP N0030	1.69	1.44 /EA	23.04

** PAYMENT RECEIVED **
** PAID IN FULL **

CHECK PAYMENT
CK# 915 ABAN

62.54	TAXABLE	59.00
	NON-TAXABLE	0.00
	SUB-TOTAL	59.00
62.54	TAX AMOUNT	3.54
	TOTAL INVOICE	62.54

X _____
RECEIVED BY

MURRAY SUPPLY CO, WHOLESALE ELEC CO.
MURRAY RENTAL AND SALES CENTER

PAGE NO 1

200-206 E. MAIN STREET
MURRAY, KY 42071-2184
PHONE: (270) 753-3361

RETURNS MUST BE ACCOMPANIED BY RECEIPT
2% ADDITIONAL CHARGE ON PAST DUE ACCOUNT

CENTER RIDGE WATER DISTRICT
CASH ACCOUNT
281 MORRIS RD.
DEXTER KY 42036

CUST # 10042
TERMS: NET 10TH

INV # A03461
DATE : 8/21/09
CLERK: KAY
TERM # 3

DUE DATE: 9/10/09

TIME :11:56

****
* INVOICE *
****

QUANTITY	UM	ITEM	DESCRIPTION	SUB.PRI	PRICE/PER	EXTENSION
2	EA	17455	ORANGE FLOUR. SPRAY PAINT		5.12 /EA	10.24
2	EA	17458	SPRAY MARKING BLUE 12OZ		6.99 /EA	13.98
3	DA	KEY	***KEY		1.69 /EA	5.07
20	EA	43912	HOSE CLAMP 3/4" TO 1 3/4" 20		1.79 /EA	35.80

** PAYMENT RECEIVED **
** PAID IN FULL **

CHECK PAYMENT
CK# 941 ABA#

69.00	TAXABLE	65.09
	NON-TAXABLE	0.00
	SUB-TOTAL	65.09
69.00	TAX AMOUNT	3.91
	TOTAL INVOICE	69.00

X _____
RECEIVED BY

MURRAY SUPPLY CO, WHOLESALE ELEC CO.
MURRAY RENTAL AND SALES CENTER
200-206 E. MAIN STREET
MURRAY, KY 42071-2184
PHONE: (270) 753-3361

PAGE NO 1

RETURNS MUST BE ACCOMPANIED BY RECEIPT
2% ADDITIONAL CHARGE ON PAST DUE ACCOUNT

CENTER RIDGE WATER DISTRICT
CASH ACCOUNT
281 MORRIS RD.
DEXTER KY 42036

CUST # 10042
TERMS: NET 10TH

INV # A66286
DATE : 9/02/09
CLERK: PHIL
TERM # 4

DUE DATE: 10/10/09

TIME :10:06

****
* INVOICE *
****

QUANTITY	UM	ITEM	DESCRIPTION	SUG.PRICE	PRICE/PER	EXTENSION
3	EA	41412	GALV BUSHING 1X3/4 IN	4.49	4.04 /EA	12.12
1	EA	40553N001	QT CLEANER 30805	12.49	11.24 /EA	11.24
1	EA	40553	PVC CMT CLR QT 31020	15.99	14.39 /EA	14.39
2	EA	42125	2" REPAIR COUPLING		13.99 /EA	27.98
6	EA	43127	2" 90 SCH 40 PVC 406-020 85291	2.39	2.151/EA	12.91
12	EA	43109	2" CPL SCH 40 PVC 429-020 85211	1.49	1.341/EA	16.09
- 3	EA	45839	3/4" SLVNT PVC BALL VLVE PBVC12		5.19 /EA	-15.57 R
			CREDIT RETURN			

** PAYMENT RECEIVED **
** PAID IN FULL **

CHECK PAYMENT
CK# 955 ABA#

83.91	TAXABLE	79.16
	NON-TAXABLE	0.00
	SUB-TOTAL	79.16
83.91	TAX AMOUNT	4.75
	TOTAL INVOICE	83.91

X _____
RECEIVED BY

MURRAY SUPPLY CO, WHOLESALE ELEC CO.
MURRAY RENTAL AND SALES CENTER
200-206 E. MAIN STREET
MURRAY, KY 42071-2184
PHONE: (270) 753-3361

PAGE NO 1

RETURNS MUST BE ACCOMPANIED BY RECEIPT
2% ADDITIONAL CHARGE ON PAST DUE ACCOUNT

CENTER RIDGE WATER DISTRICT
CASH ACCOUNT
281 MORRIS RD.
DEXTER KY 42036

CUST # 10042
TERMS: NET 10TH
P.O. # 293-6228

REF. # PO # 293-6228 SPON293-6
DUE DATE: 10/10/09

INV # A68859
DATE : 9/11/09
CLERK: PHIL
TERM # 4

TIME : 1:46

****
* INVOICE *
****

QUANTITY	UM	ITEM	DESCRIPTION	DISCOUNT	PRICE/PER	EXTENSION
2	EA	SPECIAL	SFP40116 STRAINER ASSY.		50.48 /EA	100.96*
1	EA	FRT	FREIGHT		9.03 /EA	9.03*

** PAYMENT RECEIVED **
** PAID IN FULL **

CHECK PAYMENT
CK# 962 ABAN

116.48	TAXABLE	109.89
	NON-TAXABLE	0.00
	SUB-TOTAL	109.89
116.48	TAX AMOUNT	6.59
	TOTAL INVOICE	116.48

RECEIVED BY

MURRAY SUPPLY CO, WHOLESALE ELEC CO.
MURRAY RENTAL AND SALES CENTER
200-206 E. MAIN STREET
MURRAY, KY 42071-2184
PHONE: (270) 753-3361

PAGE NO 1

RETURNS MUST BE ACCOMPANIED BY RECEIPT
2% ADDITIONAL CHARGE ON PAST DUE ACCOUNT

CENTER RIDGE WATER DISTRICT
CASH ACCOUNT
281 MORRIS RD.
DEXTER KY 42036

CUST # 10042
TERMS: NET 10TH

INV # A91678
DATE : 12/08/09
CLERK: PHIL
TERM # 4

DUE DATE: 1/10/10

TIME :11:41
****
* INVOICE *
****

QUANTITY	UM	ITEM	DESCRIPTION	SUG.PRICE	PRICE/PER	EXTENSION
1	EA	44677N029	3 HP 19 ST 230V PUMP L20P4HJ04		1320.00 /EA	1,320.00
1	EA	2007755	4-IN-1 SCREWDRIVER		4.99 /EA	4.99
1	EA	43258	2" BRAS CHCK VL MD 6300		69.99 /EA	69.99
1	EA	13336	ELMERS WOOD GLUE 4OZ		2.79 /EA	2.79
1	EA	4047429	TEFLON COMPOUNDS PUTTY 8OZ.		8.99 /EA	8.99
2	EA	45840	1" SLVNT PVC BALL VALVE PBVC16		6.79 /EA	13.58
6	EA	43115	2" FA SCH 40 PVC 435-020 85115	1.69	1.521/EA	9.13
2	EA	43121	2" MA SCH 40 PVC 436-020 85011	1.59	1.431/EA	2.86

** PAYMENT RECEIVED **
** PAID IN FULL **

CHECK PAYMENT
CK# 1021 ABA#

1518.27	TAXABLE	1432.33
	NON-TAXABLE	0.00
	SUB-TOTAL	1432.33
1518.27	TAX AMOUNT	85.94
	TOTAL INVOICE	1518.27

X _____
RECEIVED BY

MURRAY SUPPLY CO, WHOLESALE ELEC CO.
MURRAY RENTAL AND SALES CENTER
200-206 E. MAIN STREET
MURRAY, KY 42071-2184
PHONE: (270) 753-3361

PAGE NO 1

RETURNS MUST BE ACCOMPANIED BY RECEIPT
2% ADDITIONAL CHARGE ON PAST DUE ACCOUNT

CENTER RIDGE WATER DISTRICT
CASH ACCOUNT
281 MORRIS RD.
DEXTER KY 42036

CUST # 10042
TERMS: NET 10TH

INV # A02579
DATE : 12/14/09
CLERK: JAMIE
TERM # 4

DUE DATE: 1/10/10

TIME :12:23
****
* INVOICE *
****

QUANTITY	UM	ITEM	DESCRIPTION	SUG.PRICE	PRICE/PER	EXTENSION
1	EA	42681	3" SAN TEE PVC 4811 82646	4.414	3.09 /EA	3.09
1	EA	42662	3" 45 DEG EL PVC 4808 82476	2.725	1.908/EA	1.91
3	EA	42665	3" 90DEG ELBOW PVC 4807 82261	3.659	2.561/EA	7.68

** PAYMENT RECEIVED **
** PAID IN FULL **

CHECK PAYMENT
CK# 1030 ABA#

13.44	TAXABLE	12.68
	NON-TAXABLE	0.00
	SUB-TOTAL	12.68
13.44	TAX AMOUNT	0.76
	TOTAL INVOICE	13.44

RECEIVED BY

MURRAY SUPPLY CO, WHOLESALE ELEC CO.
MURRAY RENTAL AND SALES CENTER
200-206 E. MAIN STREET
MURRAY, KY 42071-2184
PHONE: (270) 753-3361

RETURNS MUST BE ACCOMPANIED BY RECEIPT
2% ADDITIONAL CHARGE ON PAST DUE ACCOUNT

CENTER RIDGE WATER DISTRICT
CASH ACCOUNT
281 MORRIS RD.
DEXTER KY 42036

CUST # 10042
TERMS: NET 10TH

INV # A04204
DATE : 12/21/09
CLERK: VICTOR
TERM # 4

DUE DATE: 1/10/10

TIME : 9:44
****
* INVOICE *
****

QUANTITY	UM	ITEM	DESCRIPTION	SUG.PRICE	PRICE/PER	EXTENSION
6	EA	35631	F40D FLOUR TUBE 227199 08/30	2.29	1.95 /EA	11.70
1	EA	1257732	*WD40 AEROSOL 11OZ VBI		3.99 /EA	3.99
1	EA	31341	BULB-SW 60W ACE 20959 PK/4	1.89	1.00 /EA	1.00S
1	EA	5870125	16" SS FAUCET CONNECTOR		6.99 /EA	6.99
1	PK	26261	SAWZALL BLADES 20521 5/PK	14.99	11.99 /PK	11.99
4	EA	30301	HDY DT BX COV BLANK 1/4 60G	.92	.74 /EA	2.96
4	EA	44301	1X1/2 BUSHING SLIP 437130 85743	.79	.71 /EA	2.84
2	EA	43146	1-1/4X1/2 BUSH SLIP 437166 85751	1.19	1.07 /EA	2.14
6	EA	43110	1/2" FA SCH 40 PVC 435005 85105	.49	.441/EA	2.65
5	EA	43144	3/4X1/2 BUSH SLIP 437-101 85741	.59	.531/EA	2.66
2	EA	43145	1X3/4 BUSH SLIP 437-131 85743	.79	.711/EA	1.42
1	EA	41103	GALV CAPS 1/2"	2.19	1.97 /EA	1.97
2	EA	43151	1X1/2 BUSHING FPT 438120 85849	1.19	1.071/EA	2.14
6	EA	43116	1/2" MA SCH 40 PVC 436005 85001	.49	.441/EA	3.53
2	EA	41251	COMP CONN 3/8X1/2FPT W66-6-8		2.99 /EA	5.98

** PAYMENT RECEIVED **
** PAID IN FULL **

CHECK PAYMENT
CK# 1034 ABA#

67.80	TAXABLE	63.96
	NON-TAXABLE	0.00
	SUB-TOTAL	63.96
67.80	TAX AMOUNT	3.84
	TOTAL INVOICE	67.80

X _____
RECEIVED BY

MURRAY SUPPLY CO., WHOLESALE ELEC CO.
MURRAY RENTAL AND SALES CENTER
200-206 E. MAIN STREET
MURRAY, KY 42071-2184
PHONE: (270) 753-3361

PAGE NO 1

RETURNS MUST BE ACCOMPANIED BY RECEIPT
2% ADDITIONAL CHARGE ON PAST DUE ACCOUNT

CENTER RIDGE WATER DISTRICT
CASH ACCOUNT
281 MORRIS RD.
DEXTER KY 42036

CUST # 10042
TERMS: NET 10TH

INV # A04539
DATE : 12/22/09
CLERK: JAMIE
TERM # 10

DUE DATE: 1/10/10

TIME :11:03

****
* INVOICE *
****

QUANTITY	UM	ITEM	DESCRIPTION	SUG.PRICE	PRICE/PER	EXTENSION
1	EA	72462	BRASS QUICK CONNECT		8.29 /EA	8.29
1	EA	70538	ACE 3/4X1/2 NPT BR FTG		3.49 /EA	3.49
1	EA	71941	ACE 1/2NPXS3/4NH		4.29 /EA	4.29
1	EA	6750550	2 1/2 HOOKS & EYES		1.69 /EA	1.69

** PAYMENT RECEIVED **
** PAID IN FULL **

CHECK PAYMENT
CK# 1038 ABAN

18.83	TAXABLE	17.76
	NON-TAXABLE	0.00
	SUB-TOTAL	17.76
18.83	TAX AMOUNT	1.07
	TOTAL INVOICE	18.83

X _____
RECEIVED BY

MURRAY SUPPLY CO, WHOLESALE ELEC CO.

PAGE NO 1

MURRAY RENTAL AND SALES CENTER
200-206 E. MAIN STREET
MURRAY, KY 42071-2184
PHONE: (270) 753-3361

RETURNS MUST BE ACCOMPANIED BY RECEIPT
2% ADDITIONAL CHARGE ON PAST DUE ACCOUNT

CASH

CUST # #5
TERMS: NET 10TH

INV # A05847
DATE : 12/29/09
CLERK: JAMIE
TERM # 3

TIME : 9:24

****
* INVOICE *
****

QUANTITY	UM	ITEM	DESCRIPTION	SUB-PRICE	PRICE/PER	EXTENSION
1	EA	41243	COMP CONN 3/8X1/2NPT W&OT-6-8		4.49 /EA	4.49

** PAYMENT RECEIVED **	20.00	TAXABLE	4.49
** CHANGE GIVEN **	15.24	NON-TAXABLE	0.00
		SUB-TOTAL	4.49
CASH PAYMENT	20.00	TAX AMOUNT	0.27
		TOTAL INVOICE	4.76

X _____
RECEIVED BY

MURRAY SUPPLY CO, WHOLESALE ELEC CO.
MURRAY RENTAL AND SALES CENTER
200-206 E. MAIN STREET
MURRAY, KY 42071-2184
PHONE: (270) 753-3361

PAGE NO: 1

RETURNS MUST BE ACCOMPANIED BY RECEIPT
2% ADDITIONAL CHARGE ON PAST DUE ACCOUNT

CENTER RIDGE WATER DISTRICT
CASH ACCOUNT
281 MORRIS RD.
DEXTER KY 42036

CUST # 10042
TERMS: NET 10TH

INV # A05740
DATE : 12/28/09
CLERK: DAVID
TERM # 8

DUE DATE: 2/10/10

TIME : 2:36
****
* INVOICE *
****

QUANTITY	UM	ITEM	DESCRIPTION	SUG/PRICE	PRICE/PER	EXTENSION
100	FT	44133	3/4 PVC PIPE SCH 40 OR 10/20/500		.20 /FT	20.00
1	EA	72462	BRASS QUICK CONNECT		8.29 /EA	8.29
1	EA	71934	ACE 3/4"X(M)X3/4"FS(F)		4.69 /EA	4.69
1	EA	S001710	3 1/4" CHEST LATCHES		2.79 /EA	2.79
1	EA	44142	LUGS & BOLTS		4.08 /EA	4.08

** PAYMENT RECEIVED **
** PAID IN FULL **

CHECK PAYMENT
CK# 1041 ABA#

42.24	TAXABLE	39.85
	NON-TAXABLE	0.00
	SUB-TOTAL	39.85
42.24	TAX AMOUNT	2.39
	TOTAL INVOICE	42.24

X _____
RECEIVED BY

CK# 758

LOWE'S

LOWE'S HOME CENTERS, INC.
1400 LOWE'S DRIVE
MURRAY, KY 42071
(270)753-9099
-SALE-
SALES #: S0722LL1 73934 01-13-09

13590 R19 FACED118.83SQ' 6X23 B	57.04
99930 JH 25'X 1" POWERLOCK TAPE	8.43
91431 1/2" T50 STAPLE 1250CT	2.97
180289 SS 16D CTD SINKER NAIL 30	36.89
13617 12OZ FOAM GAPS AND CRACK	19.92
4 @ 4.98	
21489 2" PVC BALL VALVE SOCKET	23.94
2 @ 11.97	
47385 10 OZ SILICONE I W&D WHIT	12.84
3 @ 4.28	
SUBTOTAL:	162.03
TAX:	9.72
INVOICE 06297 TOTAL:	171.75
BALANCE DUE:	171.75
CHECK :	171.75

0722 TERMINAL: 06 01/13/09 10:37:12

OF ITEMS PURCHASED: 13
EXCLUDES FEES, SERVICES AND SPECIAL ORDER ITEMS

THANK YOU FOR SHOPPING LOWE'S
RECEIPT REQUIRED FOR CASH REFUND.
CHECK PURCHASE REFUNDS REQUIRE
15 DAY WAIT PERIOD FOR CASH BACK.
STORE MGR: JON HEATH

WE HAVE THE LOWEST PRICES, GUARANTEED!

LOWE'S

LOWE'S HOME CENTERS, INC.
1400 LOWE'S DRIVE
MURRAY, KY 42071
(270)753-9099
-SALE-
SALES #: S0722GW1 1419525 12-27-09

16191 12'ROYELLE ROCKHILL MULTI	11.88
3 @ 3.96	
66306 CT S235 VINYL SHEET ADHES	7.54
25532 3/4" SCH40 COUPLING 42900	2.16
26055 3/4" SCH40 ELBOW 405007 1	2.61
25523 1/2" SCH40 COUPLING 42900	1.71
260576 3/4" SCH40 ADAPTER 435007	3.87
25014 1-1/2 CENTER OUTLET WASTE	6.77
246677 1/16"X1/16"X3/32" U NOTCH	3.42
260569 3/4" SCH40 ADAPTER 435007	2.97
23923 3/4" X 1/2" SCH40 BUSHING	2.22
6 @ 0.37	
SUBTOTAL:	45.15
TAX:	2.71
INVOICE 14632 TOTAL:	47.86
BALANCE DUE:	47.86
CHECK :	47.86

0722 TERMINAL: 14 12/27/09 18:01:52

OF ITEMS PURCHASED: 15
EXCLUDES FEES, SERVICES AND SPECIAL ORDER ITEMS

CK# 763

LOWE'S

LOWE'S HOME CENTERS, INC.
1400 LOWE'S DRIVE
MURRAY, KY 42071
(270)753-9099
-SALE-
SALES #: S0722LL1 73934 01-19-09

12957 19/32"4X8 8" OC T1-11 RS	155.28
6 @ 25.88	
SUBTOTAL:	155.28
TAX:	9.32
INVOICE 06914 TOTAL:	164.60
BALANCE DUE:	164.60
CHECK :	164.60

0722 TERMINAL: 06 01/19/09 15:41:25

OF ITEMS PURCHASED: 6
EXCLUDES FEES, SERVICES AND SPECIAL ORDER ITEMS

THANK YOU FOR SHOPPING LOWE'S
RECEIPT REQUIRED FOR CASH REFUND.
CHECK PURCHASE REFUNDS REQUIRE
15 DAY WAIT PERIOD FOR CASH BACK.
STORE MGR: JON HEATH

WE HAVE THE LOWEST PRICES, GUARANTEED!
IF YOU FIND A LOWER PRICE, WE WILL
MATCH IT 10%. SEE STORE FOR DETAILS

CK# 903

MURRAY POST OFFICE
Murray, Kentucky
420719998
2047860071 -0097
06/30/2009 (800)275-8777 10:55:30 AM

Sales Receipt

Product Description	Sale Qty	Unit Price	Final Price
FRANKFORT KY 40601 Zone-3 First-Class Large Env 2.20 oz.			$1.22
Issue PVI:			$1.22
FRANKFORT KY 40602 Zone-3 First-Class Large Env 4.40 oz.			$1.56
Issue PVI:			$1.56
Total:			$2.78
Paid by: Personal Check			$2.78

Order stamps at USPS.com/shop or call 1-800-Stamp24. Go to USPS.com/clicknship to print shipping labels with postage. For other information call 1-800-ASK-USPS.

Bill#: 1000304572570
Clerk: 14

All sales final on stamps and postage
Refunds for guaranteed services only
Thank you for your business
****
****
HELP US SERVE YOU BETTER

Go to: http://gx.gallup.com/pos

TELL US ABOUT YOUR RECENT
POSTAL EXPERIENCE

YOUR OPINION COUNTS
****
****

Customer Copy

COPYPLUS CK# 902
MURRAY KY
(270)753-7117

06/30/2009 10:33AM 01
000000#2975 CLERK01

	9 @ $0.11
DEPT.01	T1 $0.99
	9 @ $0.05
DEPT.01	T1 $0.45
	57 @ $0.17
DEPT.01	T1 $9.69
	4 @ $0.25
DEPT.01	T1 $1.00
DEPT.01	T1 $0.09
MDSE ST	$12.22
TAX1	$0.73

ITEMS 80Q
CHARGE $12.95

MURRAY NEWSPAPERS, INC.
MURRAY LEDGER & TIMES
P.O. BOX 1040
MURRAY KY 42071-1040

ADVERTISING INVOICE

3 STATEMENT	PAGE	4 BILLING DATE	5 BILLING PERIOD
	1	06/30/09	JUNE

2 BILLED ACCOUNT

CENTER RIDGE WATER DIST 1
281 MORRIS RD
DEXTER, KY 42036

7 BILLED ACCOUNT NO.	8 ADVERTISER/CLIENT NO.
258818-07	258818-07

9 NAME OF ADVERTISER/CLIENT

CENTER RIDGE WATER DIST 1

FOR INVOICE INFORMATION CALL (270)753-1916

10 DATE	12 13 14 CHARGE OR CREDITS DESCRIPTION/PRODUCT CODE	17 BILLED UNITS	18 RATE	20 NET AMOUNT
	PREVIOUS BALANCE			.00
06/30	PAY'T THANK YOU			34.00-

24 AGING 30 DAYS	60 DAYS	90 DAYS	25 TOTAL AMOUNT DUE
.00	.00	.00	-34.00

22 CURRENT NET AMOUNT
-34.00

TERMS: 1.5% INTEREST CHARGED ON BALANCE UNPAID FOR 30 DAYS
18% ANNUAL INTEREST. MINIMUM FINANCE CHARGE IS $.50

DETACH AND RETURN THIS PORTION WITH YOUR PAYMENT

COMMENTS

SEE REVERSE SIDE
FOR IMPORTANT INFORMATION

DETACH AND RETURN THIS PORTION

26 BILLED ACCOUNT NO.	27 BILLED ACCOUNT NAME	AMOUNT DUE
258818-07	CENTER RIDGE WATER D	-34.00

28 REMIT TO

MURRAY NEWSPAPERS, INC.
MURRAY LEDGER & TIMES
P.O. BOX 1040
MURRAY KY 42071-1040

2009

RECEIVED
AUG 31 2011
PUBLIC SERVICE
COMMISSION

McCoy & McCoy
Laboratorie

Bact's
&
Special
water
Sampling

McCoy & McCoy Laboratories, Inc.
P. O. Box 907
Madisonville, KY 42431
www.mccoylabs.com

Lexington KY 859-299-7775
Madisonville KY 270-821-7375
Paducah KY 270-444-6547
Pikeville KY 606-432-3104
M.DeMoss@mccoylabs.com

Center Ridge Water Dist #2
Attn: William Duncan
69 Marguerite Blvd
Newconcord KY 42076

Reported: 01/22/09
Client: CE648504
Batch No: 08121454
Sample ID: AG40691

This analytical report has been sent via express courier to the Kentucky Division of Water. We recommend that you contact the DOW to ensure delivery of your data.

CORRECTED COPY

Report corrected for analysis date of "Iron". Previous report indicated incorrect date of 01062008. Date has been corrected to indicate 01062009.

Mark DeMoss
1/22/09

SAMPLE CATEGORY = CH
DISTRIBUTION SAMPLING

KENTUCKY DIVISION OF WATER / DRINKING WATER BRANCH
SECONDARY CONTAMINANT ANALYSIS REPORT FORM

PWS ID KY0180509 Plant ID A or Dist ____ Plant Name or Location Name CENTER RIDGE WTP #2 Location Code TPA
PWS Name CENTER RIDGE WATER DISTRICT #2
PWS Address 281 MORRIS RD, DEXTER, KY 42036
PWS Contact WILLIAM M DUNCAN
PWS Phone 270-474-8267
Sample Date (MMDDYYYY) 12152008 Time 1046 Sample Type RT
RT = Routine (For Compliance)
SP = Special (Not for Compliance)
Collector Name Derek Leatherman
Signature/Date

Lab ID: 00030 Lab Sample Number AG40691 Lab Phone 270.821.7375
Lab Analyst Matt Taylor 01/22/2009
Signature/Date
Lab Supervisor Mark Dillman 1/22/09
Signature/Date

Analyte Code	Analyte Name	Analysis Method Code	<	Result (mg/L) -or- Lab Minimum Reporting Limit (mg/L)	Analysis Date (MMDDYYYY)
1002	Aluminum	797	<	0.01	01082009
1017	Chloride	720		4.36	12162008
1022	Copper	799		0.007	01082009
1025	Fluoride	720		0.2	12162008
1028	Iron	799	<	0.02	01062009
1032	Manganese	799	<	0.002	01082009
1050	Silver	799	<	0.002	01082009
1055	Sulfate	720	<	1.0	12162008
1095	Zinc	799		0.004	01082009
1905	Color (cu)	957	<	1.0	12162008
1910	Corrosivity (LANG)	838	-	2.34	01092009
1920	Odor (TON)	833	<	1.0	12162008
1925	pH	734		6.82	12152008
1930	Total Dissolved Solids (TDS)	806		44.0	12172008
2905	Foaming Agents/Surfactants	755	<	0.1	12162008

CORRECTED COPY

The signatories of this form certify by their signatures that collection and analysis of the water sample analyzed and the resulting data hereby submitted, were completed in accordance with the provisions of 401 KAR Chapter 8; and that the data submitted on this form is a true an accurate report of the results of collection and analysis performed pursuant to the above-referenced regulations. Violations of 401 KAR Chapter 8 are subject to severe penalties prescribed in KRS 224.99-010, up to $25,000 fine per day per violation and in some cases a violation may subject the violator to prison.

McCoy & McCoy Laboratories, Inc.
P. O. Box 907
Madisonville, KY 42431
www.mccoylabs.com

Lexington KY 859-299-7775
Madisonville KY 270-821-7375
Paducah KY 270-444-6547
Pikeville KY 606-432-3104
M.DeMoss@mccoylabs.com

Center Ridge Water System
Attn: William Duncan
69 Marguerite Blvd
Newconcord KY 42076

Reported: 01/22/09
Client: CE648403
Batch No: 08121449
Sample ID: AG40675

This analytical report has been sent via express courier to the Kentucky Division of Water. We recommend that you contact the DOW to ensure delivery of your data.

CORRECTED COPY

Report corrected for analysis date of "Iron". Previous report indicated incorrect date of 01062008. Date has been corrected to indicate 01062009.

Mark DeMoss
1/22/09

SAMPLE CA "EGORY = CH
D"STRIBUTION SAMPLING

KENTUCKY DIVISION OF WATER / DRINKING WATER BRANCH
SECONDARY CONTAMINANT ANALYSIS REPORT FORM

PWS ID KY0180549 Plant ID A or Dist ____ Plant Name or Location Name CENTER RIDGE WTP Location Code TPA

PWS Name CENTER RIDGE WATER SYSTEM

PWS Address 281 MORRIS RD, DEXTER, KY 42036

PWS Contact WILLIAM M DUNCAN

PWS Phone 270-474-8267

Sample Date (MMDDYYYY) 12152008 Time 0944 Sample Type RT

RT = Routine (For Compliance)
SP = Special (Not for Compliance)

Collector Name Derek Leatherman

Signature/Date

Lab ID: 00030 Lab Sample Number AG40675 Lab Phone 270.821.7375

Lab Analyst Matt Taylor 01/22/2009
Signature/Date

Lab Supervisor Mark DeMon 1/22/09
Signature/Date

Analyte Code	Analyte Name	Analysis Method Code	<	Result (mg/L) -or- Lab Minimum Reporting Limit (mg/L)	Analysis Date (MMDDYYYY)
1002	Aluminum	797	<	0.01	01082009
1017	Chloride	720		3.77	12162008
1022	Copper	799		0.003	01082009
1025	Fluoride	720		0.2	12162008
1028	Iron	799	<	0.02	01062009
1032	Manganese	799	<	0.002	01082009
1050	Silver	799	<	0.002	01082009
1055	Sulfate	720		7.91	12162008
1095	Zinc	799		0.005	01082009
1905	Color (cu)	957	<	1.0	12162008
1910	Corrosivity (LANG)	838	-	1.83	01092009
1920	Odor (TON)	833	<	1.0	12162008
1925	pH	734		7.09	12152008
1930	Total Dissolved Solids (TDS)	806		76.0	12172008
2905	Foaming Agents/Surfactants	755	<	0.1	12162008

CORRECTED COPY

The signatories of this form certify by their signatures that collection and analysis of the water sample analyzed and the resulting data hereby submitted, were completed in accordance with the provisions of 401 KAR Chapter 8; and that the data submitted on this form is a true an accurate report of the results of collection and analysis performed pursuant to the above-referenced regulations. Violations of 401 KAR Chapter 8 are subject to severe penalties prescribed in KRS 224.99-010, up to $25,000 fine per day per violation and in some cases a violation may subject the violator to prison.

McCoy & McCoy Laboratories, Inc.
P. O. Box 907
Madisonville, KY 42431
www.mccoylabs.com

Lexington KY 859-299-7775
Madisonville KY 270-821-7375
Paducah KY 270-444-6547
Pikeville KY 606-432-3104
M.DeMoss@mccoylabs.com

Center Ridge Water Dist #2
Attn: William Duncan
69 Marguerite Blvd
Newconcord KY 42076

Reported: 01/08/09
Client: CE648512
Batch No: 08121456

This analytical report has been sent via express courier to the Kentucky Division of Water. We recommend that you contact the DOW to ensure delivery of your data.

SAMPLE CATEGORY = CH
ENTRY POINT SAMPLING

KENTUCKY DIVISION OF WATER / DRINKING WATER BRANCH
SODIUM ANALYSIS REPORT FORM

This Section To Be Completed By Collector

PWS ID KY0180509 Plant ID A Plant Name CENTER RIDGE WTP #2 Location Code TPA

PWS Name CENTER RIDGE WATER DISTRICT #2 PWS Contact WILLIAM M DUNCAN

PWS Address 281 MORRIS RD, DEXTER, KY 42036 PWS Phone 270-474-8267

Sample Date (MMDDYYYY) 12152008 Time 1046 Sample Type RT Collector Name Derek Leatherman

RT = Routine (For Compliance)
SP = Special (Not for Compliance)

Signature/Date

This Section To Be Completed By Lab

Lab ID 00030 Lab Sample Number AG40699 Lab Phone 270.821.7375

Lab Analyst Jared Daugherty 01/08/2009 Lab Supervisor Mark DiMon 01/08/09

Signature/Date Signature/Date

Analyte Code	Analyte Name	Analysis Method Code	<	Result (mg/L) -or- Lab Minimum Reporting Limit (mg/L)	Analysis Date (MMDDYYYY)
1052	Sodium	799		3.12	01062008

The signatories of this form certify by their signatures that collection and analysis of the water sample analyzed and the resulting data hereby submitted, were completed in accordance with the provisions of 401 KAR Chapter 8; and that the data submitted on this form is a true an accurate report of the results of collection and analysis performed pursuant to the above-*referenced regulations. Violations of* 401 KAR Chapter 8 are subject to severe penalties prescribed in KRS 224.99-010, up to $25,000 fine per day per violation and in some cases a violation may subject the violator to prison.

McCoy & McCoy Laboratories, Inc.
P. O. Box 907
Madisonville, KY 42431
www.mccoylabs.com

Chain of Custody

Lexington KY 859-290-7775
Paducah KY 270-444-6547
Louisville KY 502-961-0001
Madisonville KY 270-821-7375
Pikeville KY 606-432-3104

Route: 54 Project SDWA

Center Ridge Water Dist #2
Attn: William Duncan
69 Marguerite Blvd
Newconcord KY 42076

Collected by: [illegible]
Collection Date: 12 15 08
Collection Time: 1046
P. O. No:
PhoneFax: 270-436-6304

CE648512 Center Ridge WD #2 Sodium 0180509 TPA

Logbatch 08121456
Sample Nos AG40699

Composite Sample Start Date ____ Time ____
Stop Date ____ Time ____

Field Data By: ____ Date ____ Time ____ Fecal Date ____ Time ____

pH Meter#: ____ pH: ____ DO Meter#: ____ DO: ____

Temp: ____ Cl: ____ Flow: ____ Units: ____ Matrix: Liquid

Collection Method	Test	Analysis Requested	Bottle Type and Preservative
G / C	DW_METPU_1	Drinking Water Metals Pick Up from Lo	
G / C	DW_NAICPAES_1	Sodium by ICP/AES	250 ml Plastic Nitric Acid 4 c

Relinquished by: [signature] Date/Time: [illegible]
Received by: [signature] Date/Time: 12/15/08 1330
Relinquished by: ____ Date/Time: ____
Received by: ____ Date/Time: ____
Relinquished by: ____ Date/Time: ____
Received by: ____ Date/Time: ____

McCoy & McCoy Laboratories, Inc.
P.O. Box 907
Madisonville, KY 42431
270-821-7375

SAMPLE ACCEPTANCE/CONDITION CHECKLIST

Client: Centerbridge #2 Logbatch No.: 08121456 Lab No.: AB40699

Sample Delivery Type (circle): US Postal UPS FedEx (MMLI) Client _____

Sample Receipt Checklist:

	YES	NO
a. Were custody seals used on outer package, and/or sample containers?		✓
b. Were sample containers received damaged?		✓
c. Cooler Temp. 7°C (circle) (Acceptable) Unacceptable		
d. Were the samples accompanied with a Chain-of-Custody or other transferable document?	✓	
e. Was all information recorded to defend the sample transfer & submittal?	✓	
f. Is each sample and container uniquely identified on the COC?	✓	
g. Were all samples in appropriate containers?	✓	
h. Did all samples have appropriate volumes?	✓	
i. Were all samples submitted within sample holding times?	✓	
j. Were "Collection Methods" recorded?	✓	
k. Were "Flow Units" recorded?		✓

Logged In By: MMM Date: 12/15/08

Exceptions:

Action Required:

_____Client Informed on ____/____/____ Client Rep:_____By:_____

_____No Action Required, see notes

_____No Action Required

Reviewed By: BKH Project Manager Date: 12/22/08

Q:\MADISONVILLE\ADMIN\Forms & Labels\Sample Checklist.doc

McCoy & McCoy Laboratories, Inc.
P. O. Box 907
Madisonville, KY 42431
www.mccoylabs.com

Lexington KY 859-299-7775
Madisonville KY 270-821-7375
Paducah KY 270-444-6547
Pikeville KY 606-432-3104
M.DeMoss@mccoylabs.com

Center Ridge Water Dist #3
Attn: William Duncan
69 Marguerite Blvd
Newconcord KY 42076

Reported: 01/22/09
Client: CE648603
Batch No: 08121458
Sample ID: AG40701

This analytical report has been sent via express courier to the Kentucky Division of Water. We recommend that you contact the DOW to ensure delivery of your data.

CORRECTED COPY

Report corrected for analysis date of "Iron". Previous report indicated incorrect date of 01062008. Date has been corrected to indicate 01062009.

Mark DeMoss
1/22/09

SAMPLE CA' 'EGORY = CH
DISTRIBUT ›N SAMPLING

KENTUCKY DIVISION OF WATER / DRINKING WATER BRANCH
SECONDARY CONTAMINANT ANALYSIS REPORT FORM

PWS ID KY0180502 Plant ID A or Dist ____ Plant Name or Location Name CENTER RIDGE WTP #3 Location Code TPA

PWS Name CENTER RIDGE WATER DISTRICT #3

PWS Address 281 MORRIS RD, DEXTER, KY 42036

PWS Contact WILLIAM M DUNCAN

PWS Phone 270-474-8267

Sample Date (MMDDYYYY) 12152008 Time 1055 Sample Type RT
RT = Routine (For Compliance)
SP = Special (Not for Compliance)

Collector Name Derek Leatherman
Signature/Date

Lab ID: 00030 Lab Sample Number AG40701 Lab Phone 270.821.7375

Lab Analyst Matt Taylor 01/22/2009
Signature/Date

Lab Supervisor Mark DeMon 1/22/09
Signature/Date

Analyte Code	Analyte Name	Analysis Method Code	<	Result (mg/L) -or- Lab Minimum Reporting Limit (mg/L)	Analysis Date (MMDDYYYY)
1002	Aluminum	797	<	0.01	01082009
1017	Chloride	720		2.89	12162008
1022	Copper	799		0.014	01082009
1025	Fluoride	720		0.2	12162008
1028	Iron	799	<	0.02	01062009
1032	Manganese	799	<	0.002	01082009
1050	Silver	799	<	0.002	01082009
1055	Sulfate	720	<	1.0	12162008
1095	Zinc	799		0.012	01082009
1905	Color (cu)	957	<	1.0	12162008
1910	Corrosivity (LANG)	838	-	3.14	01092009
1920	Odor (TON)	833	<	1.0	12162008
1925	pH	734		6.51	12152008
1930	Total Dissolved Solids (TDS)	806		38.0	12172008
2905	Foaming Agents/Surfactants	755	<	0.1	12162008

CORRECTED COPY

The signatories of this form certify by their signatures that collection and analysis of the water sample analyzed and the resulting data hereby submitted, were completed in accordance with the provisions of 401 KAR Chapter 8; and that the data submitted on this form is a true an accurate report of the results of collection and analysis performed pursuant to the above-referenced regulations. Violations of 401 KAR Chapter 8 are subject to severe penalties prescribed in KRS 224.99-010, up to $25,000 fine per day per violation and in some cases a violation may subject the violator to prison.

McCoy & McCoy Laboratories, Inc.
P. O. Box 907
Madisonville, KY 42431
www.mccoylabs.com

Lexington KY 859-299-7775
Madisonville KY 270-821-7375
Paducah KY 270-444-6547
Pikeville KY 606-432-3104
M.DeMoss@mccoylabs.com

Center Ridge Water District #4
Attn: William Duncan
69 Marguerite Blvd
Newconcord KY 42076

Reported: 01/22/09
Client: CE648302
Batch No: 08121463
Sample ID: AG40709

This analytical report has been sent via express courier to the Kentucky Division of Water. We recommend that you contact the DOW to ensure delivery of your data.

CORRECTED COPY

Report corrected for analysis date of "Iron". Previous report indicated incorrect date of 01062008. Date has been corrected to indicate 01062009.

Mark DeMoss
1/22/09

SAMPLE CATEGORY = CH
DISTRIBUTION SAMPLING

KENTUCKY DIVISION OF WATER / DRINKING WATER BRANCH
SECONDARY CONTAMINANT ANALYSIS REPORT FORM

PWS ID KY0183106 Plant ID A or Dist ____ Plant Name or Location Name L H & M WTP Location Code TPA
PWS Name L H & M WATER ASSOCIATION
PWS Address 66 EDWARDS LANE, BENTON, KY 42025
PWS Contact MITCH PACE
PWS Phone 270-527-9785
Sample Date (MMDDYYYY) 12152008 Time 1005 Sample Type RT
RT = Routine (For Compliance)
SP = Special (Not for Compliance)
Collector Name Derek Leatherman
Signature/Date

Lab ID: 00030 Lab Sample Number AG40709 Lab Phone 270.821.7375
Lab Analyst Matt Taylor 01/22/2009
Signature/Date
Lab Supervisor Mark Dettman 1/22/09
Signature/Date

Analyte Code	Analyte Name	Analysis Method Code	<	Result (mg/L) -or- Lab Minimum Reporting Limit (mg/L)	Analysis Date (MMDDYYYY)
1002	Aluminum	797	<	0.01	01082009
1017	Chloride	720		2.63	12162008
1022	Copper	799		0.003	01082009
1025	Fluoride	720		0.2	12162008
1028	Iron	799	<	0.02	01062009
1032	Manganese	799	<	0.002	01082009
1050	Silver	799	<	0.002	01082009
1055	Sulfate	720		1.21	12162008
1095	Zinc	799		0.006	01082009
1905	Color (cu)	957	<	1.0	12162008
1910	Corrosivity (LANG)	838	-	2.56	01092009
1920	Odor (TON)	833	<	1.0	12162008
1925	pH	734		6.58	12152008
1930	Total Dissolved Solids (TDS)	806		50.0	12172008
2905	Foaming Agents/Surfactants	755	<	0.1	12162008

CORRECTED COPY

The signatories of this form certify by their signatures that collection and analysis of the water sample analyzed and the resulting data hereby submitted, were completed in accordance with the provisions of 401 KAR Chapter 8; and that the data submitted on this form is a true an accurate report of the results of collection and analysis performed pursuant to the above-referenced regulations. Violations of 401 KAR Chapter 8 are subject to severe penalties prescribed in KRS 224.99-010, up to $25,000 fine per day per violation and in some cases a violation may subject the violator to prison.

McCoy & McCoy Laboratories, Inc.
P. O. Box 907
Madisonville, KY 42431
www.mccoylabs.com

Lexington KY 859-299-7775
Madisonville KY 270-821-7375
Paducah KY 270-444-6547
Pikeville KY 606-432-3104

M.DeMoss@mccoylabs.com

Center Ridge Water Dist #2
Attn: William Duncan
69 Marguerite Blvd
Newconcord KY 42076

Reported: 01/09/09
Client: CE648504
Batch No: 08121454
Sample ID: AG40691

This analytical report has been sent via express courier to the Kentucky Division of Water. We recommend that you contact the DOW to ensure delivery of your data.

SAMPLE CATEGORY = CH
DISTRIBUTION SAMPLING

KENTUCKY DIVISION OF WATER / DRINKING WATER BRANCH
SECONDARY CONTAMINANT ANALYSIS REPORT FORM

PWS ID KY0180509 Plant ID A or Dist ____ Plant Name or Location Name CENTER RIDGE WTP #2 Location Code TPA
PWS Name CENTER RIDGE WATER DISTRICT #2
PWS Address 281 MORRIS RD, DEXTER, KY 42036
PWS Contact WILLIAM M DUNCAN
PWS Phone 270-474-8267
Sample Date (MMDDYYYY) 12152008 Time 1046 Sample Type RT
RT = Routine (For Compliance)
SP = Special (Not for Compliance)
Collector Name Derek Leatherman
Signature/Date

Lab ID: 00030 Lab Sample Number AG40691 Lab Phone 270.821.7375
Lab Analyst Matt Taylor 01/09/2009
Signature/Date
Lab Supervisor Mark DeMoss 01/09/09
Signature/Date

Analyte Code	Analyte Name	Analysis Method Code	<	Result (mg/L) -or- Lab Minimum Reporting Limit (mg/L)	Analysis Date (MMDDYYYY)
1002	Aluminum	797	<	0.01	01082009
1017	Chloride	720		4.36	12162008
1022	Copper	799		0.007	01082009
1025	Fluoride	720		0.2	12162008
1028	Iron	799	<	0.02	01062008
1032	Manganese	799	<	0.002	01082009
1050	Silver	799	<	0.002	01082009
1055	Sulfate	720	<	1.0	12162008
1095	Zinc	799		0.004	01082009
1905	Color (cu)	957	<	1.0	12162008
1910	Corrosivity (LANG)	838	-	2.34	01092009
1920	Odor (TON)	833	<	1.0	12162008
1925	pH	734		6.82	12152008
1930	Total Dissolved Solids (TDS)	806		44.0	12172008
2905	Foaming Agents/Surfactants	755	<	0.1	12162008

The signatories of this form certify by their signatures that collection and analysis of the water sample analyzed and the resulting data hereby submitted, were completed in accordance with the provisions of 401 KAR Chapter 8; and that the data submitted on this form is a true an accurate report of the results of collection and analysis performed pursuant to the above-referenced regulations. Violations of 401 KAR Chapter 8 are subject to severe penalties prescribed in KRS 224.99-010, up to $25,000 fine per day per violation and in some cases a violation may subject the violator to prison.

McCoy & McCoy Laboratories, Inc.
P. O. Box 907
Madisonville, KY 42431
www.mccoylabs.com

Chain of Custody

Lexington KY 859-299-7775
Paducah KY 270-444-6547
Louisville KY 502-961-0001
Madisonville KY 270-821-7375
Pikeville KY 606-432-3104

Route: 54 Project SDWA

Center Ridge Water Dist #2
Attn: William Duncan
69 Marguerite Blvd
Newconcord KY 42076

Collected by: [illegible]
Collection Date: 12-15-08
Collection Time: 1046
P. O. No:
PhoneFax: 270-436-6304

Plant Tap (TPA)

CE648504 Center Ridge WD #2 SECOND 0180509

Logbatch 08121454
Sample Nos AG40691

Composite Sample Start Date _____ Time _____
Stop Date _____ Time _____

Field Data By: [illegible] Date 12-15-08 Time 1046 Fecal Date _____ Time _____

pH Meter#: _____ pH: 6.82 DO Meter#: _____ DO: _____

Temp: 13.7 Cl: _____ Flow: _____ Units: _____ Matrix: Liquid

Collection Method	Test	Analysis Requested	Bottle Type and Preservative
G / C	DW_ZNICPMS_1	Zinc by ICP/MS	250 ml Plastic Nitric Acid 4 c
G / C	DW_SO4IC_1	Sulfate by IC Mdv	250 ml Plastic 4 c
G / C	DW_ALICPMS_1	Aluminum by ICP/MS	250 ml Plastic Nitric Acid 4 c
G / C	DW_CAICPAES_1	Calcium by ICP/AES	250 ml Plastic Nitric Acid 4 c
G / C	DW_CUICPMS_1	Copper by ICP/MS	250 ml Plastic Nitric Acid 4 c
G / C	DW_ODOR_1	Odor Mdv	2oz Wide Mouth Glass 4 c
G / C	DW_MNICPMS_1	Manganese by ICP/MS	250 ml Plastic Nitric Acid 4 c
G / C	DW_TURBIDITY_	Turbidity Mdv	1 Liter Plastic 4 c
G / C	DW_ALKPHENO_	Alkalinity, Pheno Mdv	1 Liter Plastic 4 c
G / C	DW_AGICPMS_1	Silver by ICP/MS	250 ml Plastic Nitric Acid 4 c
G / C	DW_HARDNESS_	Hardness as CaCO3 Mdv	250 ml Plastic Nitric Acid 4 c
G / C	DW_TDS_1	Total Dissolved Solids Mdv	1 Liter Plastic 4 c
G / C	DW_ALKTOT_1	Total Alkalinity by Titrimetry Mdv	1 Liter Plastic 4 c
G / C	DW_COLORPCU_	PCU Color Mdv	1 Liter Plastic 4 c
G / C	DW_CL_1	Chloride by IC Mdv	1 Liter Plastic 4 c
G / C	DW_ALKCAR_1	Alkalinity, Carbonate (CO3) Mdv	1 Liter Plastic 4 c
G / C	DW_ALKBICAR_1	Alkalinity, Bicarbonate (HCO3) Mdv	1 Liter Plastic 4 c
G / C	DW_MBAS_1	MBAS as LAS Mdv	1 Liter Amber Wide Mouth Glass 4 c
G / C	TEMPFLD3	Temperature, C (Field)	
G / C	PH_FLD3	pH (Field)	
G / C	MM_ICPU_1	Multi Matrix IC Pick Up from Login	
G / C	DW_HARDCA_1	Hardness, Calcium	
G / C	DW_METPU_1	Drinking Water Metals Pick Up from Lo	
G / C	DW_FIC_1	Fluoride by IC Mdv	1 Liter Plastic 4 c
G / C	DW_FEICPAES_1	Iron by ICP/AES	250 ml Plastic Nitric Acid 4 c

Relinquished by: [signature] Date/Time: 12/15/08 1046
Received by: [signature] Date/Time: 12/15/08 1330
Relinquished by: _____ Date/Time: _____
Received by: _____ Date/Time: _____
Relinquished by: _____ Date/Time: _____
Received by: _____ Date/Time: _____

McCoy & McCoy Laboratories, Inc.
P.O. Box 907
Madisonville, KY 42431
270-821-7375

SAMPLE ACCEPTANCE/CONDITION CHECKLIST

Client: Center Ridge #2 Logbatch No.: 08121454 Lab No.: AG40691

Sample Delivery Type (circle): US Postal UPS FedEx MMLI Client _____

Sample Receipt Checklist:

	YES	NO
a. Were custody seals used on outer package, and/or sample containers?		✓
b. Were sample containers received damaged?		✓
c. Cooler Temp. 7°C (circle) Acceptable Unacceptable		
d. Were the samples accompanied with a Chain-of-Custody or other transferable document?	✓	
e. Was all information recorded to defend the sample transfer & submittal?	✓	
f. Is each sample and container uniquely identified on the COC?	✓	
g. Were all samples in appropriate containers?	✓	
h. Did all samples have appropriate volumes?	✓	
i. Were all samples submitted within sample holding times?	✓	
j. Were "Collection Methods" recorded?	✓	
k. Were "Flow Units" recorded?		✓

Logged In By: MWM Date: 12/15/08

Exceptions:

Action Required:

_____Client Informed on ____/____/____ Client Rep:_____By:_____

_____No Action Required, see notes

_____No Action Required

Reviewed By: BKH Project Manager Date: 12/22/08

Q:\MADISONVILLE\ADMIN\Forms & Labels\Sample Checklist.doc

McCoy & McCoy Laboratories, Inc.
P. O. Box 907
Madisonville, KY 42431
www.mccoylabs.com

Lexington KY 859-299-7775
Madisonville KY 270-821-7375
Paducah KY 270-444-6547
Pikeville KY 606-432-3104
M.DeMoss@mccoylabs.com

Center Ridge Water System
Attn: William Duncan
69 Marguerite Blvd
Newconcord KY 42076

Reported: 01/09/09
Client: CE648403
Batch No: 08121449
Sample ID: AG40675

This analytical report has been sent via express courier to the Kentucky Division of Water. We recommend that you contact the DOW to ensure delivery of your data.

SAMPLE CATEGORY = C-1
DISTRIBUTION SAMPLING

KENTUCKY DIVISION OF WATER / DRINKING WATER BRANCH
SECONDARY CONTAMINANT ANALYSIS REPORT FORM

PWS ID KY0180549 Plant ID A or Dist ____ Plant Name or Location Name CENTER RIDGE WTP Location Code TPA

PWS Name CENTER RIDGE WATER SYSTEM

PWS Address 281 MORRIS RD, DEXTER, KY 42036

PWS Contact WILLIAM M DUNCAN

PWS Phone 270-474-8267

Sample Date (MMDDYYYY) 12152008 Time 0944 Sample Type RT

RT = Routine (For Compliance)
SP = Special (Not for Compliance)

Collector Name Derek Leatherman

Signature/Date

Lab ID: 00030 Lab Sample Number AG40675 Lab Phone 270.821.7375

Lab Analyst Matt Taylor 01/09/2009
Signature/Date

Lab Supervisor Mark DeMon 01/09/09
Signature/Date

Analyte Code	Analyte Name	Analysis Method Code	<	Result (mg/L) -or- Lab Minimum Reporting Limit (mg/L)	Analysis Date (MMDDYYYY)
1002	Aluminum	797	<	0.01	01082009
1017	Chloride	720		3.77	12162008
1022	Copper	799		0.003	01082009
1025	Fluoride	720		0.2	12162008
1028	Iron	799	<	0.02	01062008
1032	Manganese	799	<	0.002	01082009
1050	Silver	799	<	0.002	01082009
1055	Sulfate	720		7.91	12162008
1095	Zinc	799		0.005	01082009
1905	Color (cu)	957	<	1.0	12162008
1910	Corrosivity (LANG)	838	-	1.83	01092009
1920	Odor (TON)	833	<	1.0	12162008
1925	pH	734		7.09	12152008
1930	Total Dissolved Solids (TDS)	806		76.0	12172008
2905	Foaming Agents/Surfactants	755	<	0.1	12162008

The signatories of this form certify by their signatures that collection and analysis of the water sample analyzed and the resulting data hereby submitted, were completed in accordance with the provisions of 401 KAR Chapter 8; and that the data submitted on this form is a true an accurate report of the results of collection and analysis performed pursuant to the above-referenced regulations. Violations of 401 KAR Chapter 8 are subject to severe penalties prescribed in KRS 224.99-010, up to $25,000 fine per day per violation and in some cases a violation may subject the violator to prison.

McCoy & McCoy Laboratories, Inc.
P. O. Box 987
Madisonville, KY 42431
www.mccoylabs.com

Chain of Custody

Lexington KY 859-299-7775
Madisonville KY 270-821-7375
Paducah KY 270-444-6547
Pikeville KY 606-432-3104
Louisville KY 502-961-0001

Route: 54 Project: SDWA
Center Ridge Water System
Attn: William Duncan
69 Marguerite Blvd
Newconcord KY 42076

Collected by: MMLT/APC
Collection Date: 10-15-08
Collection Time: 0944
P. O. No:
PhoneFax: 270-436-6304

CE648403 Center Ridge WD #1 SECOND 0180549 TPA

Logbatch 08121449
Composite Sample Start Date Time
Sample Nos AG40675
Stop Date Time

Field Data By: MMLT/APC Date 10.15.08 Time 0944 Fecal Date Time
pH Meter#: 14 pH: 7.09 DO Meter#: DO:
Temp: Cl: Flow: Units: Matrix: Liquid

Collection Method	Test	Analysis Requested	Bottle Type and Preservative
G / C	DW_TURBIDITY_	Turbidity Mdv	1 Liter Plastic 4 c
G / C	DW_ALKPHENO_	Alkalinity, Pheno Mdv	1 Liter Plastic 4 c
G / C	DW_ALKCAR_1	Alkalinity, Carbonate (CO3) Mdv	1 Liter Plastic 4 c
G / C	DW_ALKBICAR_1	Alkalinity, Bicarbonate (HCO3) Mdv	1 Liter Plastic 4 c
G / C	DW_MBAS_1	MBAS as LAS Mdv	1 Liter Amber Wide Mouth Glass 4 c
G / C	TEMPFLD3	Temperature, C (Field)	
G / C	PH_FLD3	pH (Field)	
G / C	MM_ICPU_1	Multi Matrix IC Pick Up from Login	
G / C	DW_HARDCA_1	Hardness, Calcium	
G / C	DW_METPU_1	Drinking Water Metals Pick Up from Lo	
G / C	DW_FIC_1	Fluoride by IC Mdv	1 Liter Plastic 4 c
G / C	DW_COLORPCU_	PCU Color Mdv	1 Liter Plastic 4 c
G / C	DW_CL_1	Chloride by IC Mdv	1 Liter Plastic 4 c
G / C	DW_TDS_1	Total Dissolved Solids Mdv	1 Liter Plastic 4 c
G / C	DW_SO4IC_1	Sulfate by IC Mdv	250 ml Plastic 4 c
G / C	DW_ALICPMS_1	Aluminum by ICP/MS	250 ml Plastic Nitric Acid 4 c
G / C	DW_CAICPAES_1	Calcium by ICP/AES	250 ml Plastic Nitric Acid 4 c
G / C	DW_CUICPMS_1	Copper by ICP/MS	250 ml Plastic Nitric Acid 4 c
G / C	DW_HARDNESS_	Hardness as CaCO3 Mdv	250 ml Plastic Nitric Acid 4 c
G / C	DW_FEICPAES_1	Iron by ICP/AES	250 ml Plastic Nitric Acid 4 c
G / C	DW_MNICPMS_1	Manganese by ICP/MS	250 ml Plastic Nitric Acid 4 c
G / C	DW_AGICPMS_1	Silver by ICP/MS	250 ml Plastic Nitric Acid 4 c
G / C	DW_ZNICPMS_1	Zinc by ICP/MS	250 ml Plastic Nitric Acid 4 c
G / C	DW_ODOR_1	Odor Mdv	2oz Wide Mouth Glass 4 c
G / C	DW_ALKTOT_1	Total Alkalinity by Titrimetry Mdv	1 Liter Plastic 4 c

Relinquished by: [signature] Date/Time: 10/15/08 / 0945
Received by: [signature] Date/Time: 12/15/08 1330
Relinquished by: [signature] Date/Time:
Received by: Date/Time:
Relinquished by: Date/Time:
Received by: Date/Time:

MLM 12/15/08

McCoy & McCoy Laboratories, Inc.
P.O. Box 907
Madisonville, KY 42431
270-821-7375

SAMPLE ACCEPTANCE/CONDITION CHECKLIST

Client: Center Ridge Logbatch No: 08121449 Lab No: AG40675

Sample Delivery Type (circle): US Postal UPS FedEx (MMLI) Client _____

Sample Receipt Checklist:

	YES	NO
a. Were custody seals used on outer package, and/or sample containers?		✓
b. Were sample containers received damaged?		✓
c. Cooler Temp. 7°C (circle) (Acceptable) Unacceptable		
d. Were the samples accompanied with a Chain-of-Custody or other transferable document?	✓	
e. Was all information recorded to defend the sample transfer & submittal?	✓	
f. Is each sample and container uniquely identified on the COC?	✓	
g. Were all samples in appropriate containers?	✓	
h. Did all samples have appropriate volumes?	✓	
i. Were all samples submitted within sample holding times?	✓	
j. Were "Collection Methods" recorded?	✓	
k. Were "Flow Units" recorded?		✓

Logged In By: MLM Date: 12/15/08

Exceptions:

Action Required:

_____Client Informed on ____/____/____ Client Rep:_____By:_____

_____No Action Required, see notes

_____No Action Required

Reviewed By: BKH Project Manager Date: 12/22/08

Q:\MADISONVILLE\ADMIN\Forms & Labels\Sample Checklist.doc

McCoy & McCoy Laboratories, Inc.
P. O. Box 907
Madisonville, KY 42431
www.mccoylabs.com

Lexington KY 859-299-7775
Madisonville KY 270-821-7375
Paducah KY 270-444-6547
Pikeville KY 606-432-3104

M.DeMoss@mccoylabs.com

Center Ridge Water Dist #3
Attn: William Duncan
69 Marguerite Blvd
Newconcord KY 42076

Reported: 01/09/09
Client: CE648603
Batch No: 08121458
Sample ID: AG40701

This analytical report has been sent via express courier to the Kentucky Division of Water. We recommend that you contact the DOW to ensure delivery of your data.

SAMPLE CATEGORY = CH
DISTRIBUTION SAMPLING

KENTUCKY DIVISION OF WATER / DRINKING WATER BRANCH

SECONDARY CONTAMINANT ANALYSIS REPORT FORM

PWS ID KY0180502 Plant ID A ___ or Dist ___ Plant Name or Location Name CENTER RIDGE WTP #3 Location Code TPA

PWS Name CENTER RIDGE WATER DISTRICT #3

PWS Address 281 MORRIS RD, DEXTER, KY 42036

PWS Contact WILLIAM M DUNCAN

PWS Phone 270-474-8267

Sample Date (MMDDYYYY) 12152008 Time 1055 Sample Type RT
RT = Routine (For Compliance)
SP = Special (Not for Compliance)

Collector Name Derek Leatherman
Signature/Date

Lab ID: 00030 Lab Sample Number AG40701 Lab Phone 270.821.7375

Lab Analyst Matt Taylor 01/09/2009
Signature/Date

Lab Supervisor Mark DeMon 01/09/09
Signature/Date

Analyte Code	Analyte Name	Analysis Method Code	<	Result (mg/L) -or- Lab Minimum Reporting Limit (mg/L)	Analysis Date (MMDDYYYY)
1002	Aluminum	797	<	0.01	01082009
1017	Chloride	720		2.89	12162008
1022	Copper	799		0.014	01082009
1025	Fluoride	720		0.2	12162008
1028	Iron	799	<	0.02	01062008
1032	Manganese	799	<	0.002	01082009
1050	Silver	799	<	0.002	01082009
1055	Sulfate	720	<	1.0	12162008
1095	Zinc	799		0.012	01082009
1905	Color (cu)	957	<	1.0	12162008
1910	Corrosivity (LANG)	838	-	3.14	01092009
1920	Odor (TON)	833	<	1.0	12162008
1925	pH	734		6.51	12152008
1930	Total Dissolved Solids (TDS)	806		38.0	12172008
2905	Foaming Agents/Surfactants	755	<	0.1	12162008

The signatories of this form certify by their signatures that collection and analysis of the water sample analyzed and the resulting data hereby submitted, were completed in accordance with the provisions of 401 KAR Chapter 8; and that the data submitted on this form is a true an accurate report of the results of collection and analysis performed pursuant to the above-referenced regulations. Violations of 401 KAR Chapter 8 are subject to severe penalties prescribed in KRS 224.99-010, up to $25,000 fine per day per violation and in some cases a violation may subject the violator to prison.

McCoy & McCoy Laboratories, Inc.
P. O. Box 907
Madisonville, KY 42431
www.mccoylabs.com

Chain of Custody

Lexington KY 859-299-7775
Paducah KY 270-444-6547
Louisville KY 502-861-0001
Madisonville KY 270-821-7375
Pikeville KY 606-432-3104

Route: 54 Project SDWA

Center Ridge Water Dist #3
Attn: William Duncan
69 Marguerite Blvd
Newconcord KY 42076

Collected by: MMLI/DPL

Collection Date: 12/15/08

Collection Time: 1055

P. O. No:

Phone/Fax: 270-436-6304

CE648603 Center Ridge WD #3 SECOND 0180502 TPA

Logbatch 08121458

Composite Sample Start Date ____ Time ____

Sample Nos AG40701

Stop Date ____ Time ____

Field Data By: MMLI/DPL & JTW Date 12/15/08 Time 1055 Fecal Date ____ Time ____

pH Meter#: ____ pH: 6.51 DO Meter#: ____ DO: ____

Temp: 13.8 Cl: ____ Flow: ____ Units: ____ Matrix: Liquid

Collection Method	Test	Analysis Requested	Bottle Type and Preservative
G / C	TEMPFLD3	Temperature, C (Field)	
G / C	DW_MBAS_1	MBAS as LAS Mdv	1 Liter Amber Wide Mouth Glass 4 c
G / C	DW_ALKBICAR_1	Alkalinity, Bicarbonate (HCO3) Mdv	1 Liter Plastic 4 c
G / C	DW_ALKCAR_1	Alkalinity, Carbonate (CO3) Mdv	1 Liter Plastic 4 c
G / C	DW_ALKPHENO_	Alkalinity, Pheno Mdv	1 Liter Plastic 4 c
G / C	DW_CL_1	Chloride by IC Mdv	1 Liter Plastic 4 c
G / C	DW_FIC_1	Fluoride by IC Mdv	1 Liter Plastic 4 c
G / C	DW_COLORPCU_	PCU Color Mdv	1 Liter Plastic 4 c
G / C	DW_ALKTOT_1	Total Alkalinity by Titrimetry Mdv	1 Liter Plastic 4 c
G / C	PH_FLD3	pH (Field)	
G / C	DW_TURBIDITY_	Turbidity Mdv	1 Liter Plastic 4 c
G / C	DW_SO4IC_1	Sulfate by IC Mdv	250 ml Plastic 4 c
G / C	DW_ALICPMS_1	Aluminum by ICP/MS	250 ml Plastic Nitric Acid 4 c
G / C	DW_CAICPAES_1	Calcium by ICP/AES	250 ml Plastic Nitric Acid 4 c
G / C	DW_CUICPMS_1	Copper by ICP/MS	250 ml Plastic Nitric Acid 4 c
G / C	DW_HARDNESS_	Hardness as CaCO3 Mdv	250 ml Plastic Nitric Acid 4 c
G / C	DW_FEICPAES_1	Iron by ICP/AES	250 ml Plastic Nitric Acid 4 c
G / C	DW_MNICPMS_1	Manganese by ICP/MS	250 ml Plastic Nitric Acid 4 c
G / C	DW_AGICPMS_1	Silver by ICP/MS	250 ml Plastic Nitric Acid 4 c
G / C	DW_ZNICPMS_1	Zinc by ICP/MS	250 ml Plastic Nitric Acid 4 c
G / C	DW_TDS_1	Total Dissolved Solids Mdv	1 Liter Plastic 4 c
G / C	DW_HARDCA_1	Hardness, Calcium	
G / C	DW_METPU_1	Drinking Water Metals Pick Up from Lo	
G / C	DW_ODOR_1	Odor Mdv	2oz Wide Mouth Glass 4 c
G / C	MM_ICPU_1	Multi Matrix IC Pick Up from Login	

Relinquished by: [signature] Date/Time: 12/15/08/1055

Received by: Mindy Martin Date/Time: 12/15/08/1530

Relinquished by: ____ Date/Time: ____

Received by: ____ Date/Time: ____

Relinquished by: ____ Date/Time: ____

Received by: ____ Date/Time: ____

McCoy & McCoy Laboratories, Inc.
P.O. Box 907
Madisonville, KY 42431
270-821-7375

SAMPLE ACCEPTANCE/CONDITION CHECKLIST

Client: Center Ridge #3 Logbatch No.: 08121458 Lab No.: AG40701

Sample Delivery Type (circle): US Postal UPS FedEx (MMLI) Client _____

Sample Receipt Checklist:

	YES	NO
a. Were custody seals used on outer package, and/or sample containers?		✓
b. Were sample containers received damaged?		✓
c. Cooler Temp. 7°C (circle) (Acceptable) Unacceptable		
d. Were the samples accompanied with a Chain-of-Custody or other transferable document?	✓	
e. Was all information recorded to defend the sample transfer & submittal?	✓	
f. Is each sample and container uniquely identified on the COC?	✓	
g. Were all samples in appropriate containers?	✓	
h. Did all samples have appropriate volumes?	✓	
i. Were all samples submitted within sample holding times?	✓	
j. Were "Collection Methods" recorded?	✓	
k. Were "Flow Units" recorded?		✓

Logged In By: MLM Date: 12/15/08

Exceptions:

Action Required:

_____Client Informed on ____/____/____ Client Rep:_____By:_____

_____No Action Required, see notes

_____No Action Required

Reviewed By: BKH Project Manager Date: 12/22/08

Q:\MADISONVILLE\ADMIN\Forms & Labels\Sample Checklist.doc

McCoy & McCoy Laboratories, Inc.
P. O. Box 907
Madisonville, KY 42431
www.mccoylabs.com

Lexington KY 859-299-7775
Madisonville KY 270-821-7375
Paducah KY 270-444-6547
Pikeville KY 606-432-3104
M.DeMoss@mccoylabs.com

Center Ridge Water Dist #3
Attn: William Duncan
69 Marguerite Blvd
Newconcord KY 42076

Reported: 01/08/09
Client: CE648610
Batch No: 08121459

This analytical report has been sent via express courier to the Kentucky Division of Water. We recommend that you contact the DOW to ensure delivery of your data.

SAMPLE CATEGORY = CH
ENTRY POINT SAMPLING

KENTUCKY DIVISION OF WATER / DRINKING WATER BRANCH

SODIUM ANALYSIS REPORT FORM

This Section To Be Completed By Collector

PWS ID KY0180502 Plant ID A Plant Name Center Ridge #3 WTP Location Code TPA

PWS Name CENTER RIDGE WATER DISTRICT #3 PWS Contact WILLIAM M DUNCAN

PWS Address 281 MORRIS RD, DEXTER, KY 42036 PWS Phone 270-474-8267

Sample Date (MMDDYYYY) 12152008 Time 1055 Sample Type RT Collector Name Derek Leatherman

RT = Routine (For Compliance)
SP = Special (Not for Compliance)

Signature/Date

This Section To Be Completed By Lab

Lab ID 00030 Lab Sample Number AG40702 Lab Phone 270.821.7375

Lab Analyst Jared Daugherty 01/08/2009 Lab Supervisor Mark DeMoss 01/08/09

Signature/Date Signature/Date

Analyte Code	Analyte Name	Analysis Method Code	<	Result (mg/L) -or- Lab Minimum Reporting Limit (mg/L)	Analysis Date (MMDDYYYY)
1052	Sodium	799		3.08	01062008

The signatories of this form certify by their signatures that collection and analysis of the water sample analyzed and the resulting data hereby submitted, were completed in accordance with the provisions of 401 KAR Chapter 8; and that the data *submitted on this form is a true an accurate report of the results of collection and analysis performed pursuant to the above-referenced regulations.* Violations of 401 KAR Chapter 8 are subject to severe penalties prescribed in KRS 224.99-010, up to $25,000 fine per day per violation and in some cases a violation may subject the violator to prison.

McCoy & McCoy Laboratories, Inc.
P. O. Box 907
Madisonville, KY 42431
www.mccoylabs.com

Chain of Custody

Lexington KY 859-299-7775
Madisonville KY 270-821-7376
Paducah KY 270-444-6547
Pikeville KY 608-432-3104
Louisville KY 502-961-0001

Route: 54 Project SDWA
Center Ridge Water Dist #3
Attn: William Duncan
69 Marguerite Blvd
Newconcord KY 42076

Collected by: MMEI/DPL
Collection Date: 12/15/08
Collection Time: 1055
P. O. No:
PhoneFax: 270-436-6304

CE648610 Center Ridge WD #3 Sodium 0180502 TPA

Logbatch 08121459
Sample Nos AG 40702

Composite Sample Start Date ____ Time ____
Stop Date ____ Time ____

Field Data By: ____ Date ____ Time ____ Fecal Date ____ Time ____
pH Meter#: ____ pH: ____ DO Meter#: ____ DO: ____
Temp: ____ Cl: ____ Flow: ____ Units: ____ Matrix: Liquid

Collection Method	Test	Analysis Requested	Bottle Type and Preservative
G / C	DW_METPU_1	Drinking Water Metals Pick Up from Lo	
G / C	DW_NAICPAES_1	Sodium by ICP/AES	250 ml Plastic Nitric Acid 4 c

Relinquished by: [signature] Date/Time: 12/15/08/1055
Received by: [signature] Date/Time: 12/15/08 1330
Relinquished by: ____ Date/Time: ____
Received by: ____ Date/Time: ____
Relinquished by: ____ Date/Time: ____
Received by: ____ Date/Time: ____

McCoy & McCoy Laboratories, Inc.
P.O. Box 907
Madisonville, KY 42431
270-821-7375

SAMPLE ACCEPTANCE/CONDITION CHECKLIST

Client: Center Ridge #3 Logbatch No. 08121459 Lab No.: AG40702

Sample Delivery Type (circle): US Postal UPS FedEx MMLI Client _____

Sample Receipt Checklist:

	YES	NO
a. Were custody seals used on outer package, and/or sample containers?		✓
b. Were sample containers received damaged?		✓
c. Cooler Temp. 7°C (circle) Acceptable Unacceptable		
d. Were the samples accompanied with a Chain-of-Custody or other transferable document?	✓	
e. Was all information recorded to defend the sample transfer & submittal?	✓	
f. Is each sample and container uniquely identified on the COC?	✓	
g. Were all samples in appropriate containers?	✓	
h. Did all samples have appropriate volumes?	✓	
i. Were all samples submitted within sample holding times?	✓	
j. Were "Collection Methods" recorded?	✓	
k. Were "Flow Units" recorded?		✓

Logged In By: MLM Date: 12/15/08

Exceptions:

Action Required:

_____Client Informed on ____/____/____ Client Rep:_____By:_____

_____No Action Required, see notes

_____No Action Required

Reviewed By: BKH Project Manager Date: 12/22/08

Q:\MADISONVILLE\ADMIN\Forms & Labels\Sample Checklist.doc

McCoy & McCoy Laboratories, Inc.
P. O. Box 907
Madisonville, KY 42431
www.mccoylabs.com

Lexington KY 859-299-7775
Paducah KY 270-444-6547
Madisonville KY 270-821-7375
Pikeville KY 606-432-3104
M.DeMoss@mccoylabs.com

Center Ridge Water District #4
Attn: William Duncan
69 Marguerite Blvd
Newconcord KY 42076

Reported: 01/08/09
Client: CE648309
Batch No: 08121465

This analytical report has been sent via express courier to the Kentucky Division of Water. We recommend that you contact the DOW to ensure delivery of your data.

SAMPLE CATEGORY = C
ENTRY POINT SAMPLING

KENTUCKY DIVISION OF WATER / DRINKING WATER BRANCH

SODIUM ANALYSIS REPORT FORM

This Section To Be Completed By Collector

PWS ID KY0183106 Plant ID A Plant Name L H & M WTP Location Code TPA

PWS Name L H & M WATER ASSOCIATION PWS Contact MITCH PACE

PWS Address 66 EDWARDS LANE, BENTON, KY 42025 PWS Phone 270-527-9785

Sample Date (MMDDYYYY) 12152008 Time 1005 Sample Type RT Collector Name Derek Leatherman

RT = Routine (For Compliance)
SP = Special (Not for Compliance)

Signature/Date

This Section To Be Completed By Lab

Lab ID 00030 Lab Sample Number AG40712 Lab Phone 270.821.7375

Lab Analyst Jared Daugherty 01/08/2009 Lab Supervisor Mark Dillman 01/08/09

Signature/Date Signature/Date

Analyte Code	Analyte Name	Analysis Method Code	<	Result (mg/L) -or- Lab Minimum Reporting Limit (mg/L)	Analysis Date (MMDDYYYY)
1052	Sodium	799		3.92	01062008

The signatories of this form certify by their signatures that collection and analysis of the water sample analyzed and the resulting data hereby submitted, were completed in accordance with the provisions of 401 KAR Chapter 8; and that the data submitted on this form is a true an accurate report of the results of collection and analysis performed pursuant to the above-referenced regulations. Violations of 401 KAR Chapter 8 are subject to severe penalties prescribed in KRS 224.99-010, up to $25,000 fine per day per violation and in some cases a violation may subject the violator to prison.

McCoy & McCoy Laboratories, Inc.
P. O. Box 997
Madisonville, KY 42431
www.mccoylabs.com

Chain of Custody

Lexington KY 859-299-7775
Paducah KY 270-444-8547
Louisville KY 502-961-0001
Madisonville KY 270-821-7375
Pikeville KY 606-432-3104

Route: 54 Project SDWA

Collected by: MMC/DPL

Collection Date: 12/15/08

Collection Time: 1005

Center Ridge Water District #4
Attn: William Duncan
69 Marguerite Blvd
Newconcord KY 42076

P. O. No:

Phone/Fax: 270-436-6304

CE648309 Center Ridge WD #4 Sodium 0183106 PPA

Logbatch 08121465

Composite Sample Start Date Time

Sample Nos A540712

Stop Date Time

Field Data By: Date Time Fecal Date Time

pH Meter#: pH: DO Meter#: DO:

Temp: Cl: Flow: Units: Matrix: Liquid

Collection Method	Test	Analysis Requested	Bottle Type and Preservative
G / C	DW_NAICPAES_1	Sodium by ICP/AES	250 ml Plastic Nitric Acid 4 c
G / C	DW_METPU_1	Drinking Water Metals Pick Up from Lo	

Relinquished by: Date/Time: 12/15/08 1045

Received by: Date/Time:

Relinquished by: Date/Time:

Received by: Date/Time:

Relinquished by: Date/Time:

Received by: Date/Time:

McCoy & McCoy Laboratories, Inc.
P.O. Box 907
Madisonville, KY 42431
270-821-7375

SAMPLE ACCEPTANCE/CONDITION CHECKLIST

Client: Center Ridge Logbatch No.: 08121465 Lab No.: AG40712

Sample Delivery Type (circle): US Postal UPS FedEx MMLI Client _____

Sample Receipt Checklist:

	YES	NO
a. Were custody seals used on outer package, and/or sample containers?		✓
b. Were sample containers received damaged?		✓
c. Cooler Temp. 7°C (circle) Acceptable Unacceptable		
d. Were the samples accompanied with a Chain-of-Custody or other transferable document?	✓	
e. Was all information recorded to defend the sample transfer & submittal?	✓	
f. Is each sample and container uniquely identified on the COC?	✓	
g. Were all samples in appropriate containers?	✓	
h. Did all samples have appropriate volumes?	✓	
i. Were all samples submitted within sample holding times?	✓	
j. Were "Collection Methods" recorded?	✓	
k. Were "Flow Units" recorded?		✓

Logged In By: [signature] Date: 12/15/08

Exceptions:

Action Required:

_____Client Informed on ____/____/____ Client Rep:_____By:_____

_____No Action Required, see notes

_____No Action Required

Reviewed By: BKH Project Manager Date: 12/22/08

Q:\MADISONVILLE\ADMIN\Forms & Labels\Sample Checklist.doc

McCoy & McCoy Laboratories, Inc.
P. O. Box 907
Madisonville, KY 42431
www.mccoylabs.com

Lexington KY 859-299-7775
Madisonville KY 270-821-7375
Paducah KY 270-444-6547
Pikeville KY 606-432-3104
M.DeMoss@mccoylabs.com

Center Ridge Water System
Attn: William Duncan
69 Marguerite Blvd
Newconcord KY 42076

Reported: 01/08/09
Client: CE648413
Batch No: 08121451

This analytical report has been sent via express courier to the Kentucky Division of Water. We recommend that you contact the DOW to ensure delivery of your data.

SAMPLE CATEGORY = CH
ENTRY POINT SAMPLING

KENTUCKY DIVISION OF WATER / DRINKING WATER BRANCH
SODIUM ANALYSIS REPORT FORM

This Section To Be Completed By Collector

PWS ID KY0180549 Plant ID A Plant Name Center Ridge WTP #1 Location Code TPA

PWS Name CENTER RIDGE WATER SYSTEM PWS Contact WILLIAM M DUNCAN

PWS Address 281 MORRIS RD, DEXTER, KY 42036 PWS Phone 270-474-8267

Sample Date (MMDDYYYY) 12152008 Time 0944 Sample Type RT Collector Name Derek Leatherman

RT = Routine (For Compliance)
SP = Special (Not for Compliance)

Signature/Date

This Section To Be Completed By Lab

Lab ID 00030 Lab Sample Number AG40676 Lab Phone 270.821.7375

Lab Analyst Jared Daugherty 01/08/2009 Signature/Date

Lab Supervisor Mark Altman 01/08/09 Signature/Date

Analyte Code	Analyte Name	Analysis Method Code	<	Result (mg/L) -or- Lab Minimum Reporting Limit (mg/L)	Analysis Date (MMDDYYYY)
1052	Sodium	799		3.94	01062008

The signatories of this form certify by their signatures that collection and analysis of the water sample analyzed and the resulting data hereby submitted, were completed in accordance with the provisions of 401 KAR Chapter 8; and that the data submitted on this form is a true an accurate report of the results of collection and analysis performed pursuant to the above-referenced regulations. Violations of 401 KAR Chapter 8 are subject to severe penalties prescribed in KRS 224.99-010, up to $25,000 fine per day per violation and in some cases a violation may subject the violator to prison.

McCoy & McCoy Laboratories, Inc.
P. O. Box 907
Madisonville, KY 42431
www.mccoylabs.com

Chain of Custody

Lexington KY 859-299-7775
Madisonville KY 270-821-7375
Paducah KY 270-444-6547
Pikeville KY 606-432-3104
Louisville KY 502-961-0001

Route: 54 Project SDWA

Center Ridge Water System
Attn: William Duncan
69 Marguerite Blvd
Newconcord KY 42076

Collected by: [illegible]

Collection Date: 12/15/08

Collection Time: 0944

P. O. No:

PhoneFax: 270-436-6304

CE648413 Center Ridge WD #1 Sodium 0180549 TPA

Logbatch 08121451

Composite Sample Start Date _____ Time _____

Sample Nos AG40676

Stop Date _____ Time _____

Field Data By: _____ Date _____ Time _____ Fecal Date _____ Time _____

pH Meter#: _____ pH: _____ DO Meter#: _____ DO: _____

Temp: _____ Cl: _____ Flow: _____ Units: _____ Matrix: Liquid

Collection Method	Test	Analysis Requested	Bottle Type and Preservative
G / C	DW_METPU_1	Drinking Water Metals Pick Up from Lo	
G / C	DW_NAICPAES_1	Sodium by ICP/AES	250 ml Plastic Nitric Acid 4 c

Relinquished by: [signature] Date/Time: 12/15/08 0944

Received by: Mindy Martin Date/Time: 12/15/08 1330

Relinquished by: _____ Date/Time: _____

Received by: _____ Date/Time: _____

Relinquished by: _____ Date/Time: _____

Received by: _____ Date/Time: _____

McCoy & McCoy Laboratories, Inc.
P.O. Box 907
Madisonville, KY 42431
270-821-7375

SAMPLE ACCEPTANCE/CONDITION CHECKLIST

Client: Center Ridge #1 Logbatch No.: 08121451 Lab No.: AG40676

Sample Delivery Type (circle): US Postal UPS FedEx (MMLI) Client _____

Sample Receipt Checklist:

	YES	NO
a. Were custody seals used on outer package, and/or sample containers?		✓
b. Were sample containers received damaged?		✓
c. Cooler Temp. 7°C (circle) (Acceptable) Unacceptable		
d. Were the samples accompanied with a Chain-of-Custody or other transferable document?	✓	
e. Was all information recorded to defend the sample transfer & submittal?	✓	
f. Is each sample and container uniquely identified on the COC?	✓	
g. Were all samples in appropriate containers?	✓	
h. Did all samples have appropriate volumes?	✓	
i. Were all samples submitted within sample holding times?	✓	
j. Were "Collection Methods" recorded?	✓	
k. Were "Flow Units" recorded?		✓

Logged In By: MMM Date: 12/15/08

Exceptions:

Action Required:

_____Client Informed on ____/____/____ Client Rep:_____By:_____

_____No Action Required, see notes

_____No Action Required

Reviewed By: BKH Project Manager Date: 12/22/08

Q:\MADISONVILLE\ADMIN\Forms & Labels\Sample Checklist.doc

McCoy & McCoy Laboratories, Inc.
P. O. Box 907
Madisonville, KY 42431
www.mccoylabs.com

Lexington KY 859-299-7775
Paducah KY 270-444-6547
Madisonville KY 270-821-7375
Pikeville KY 606-432-3104
M.DeMoss@mccoylabs.com

Center Ridge Water District #4
Attn: William Duncan
69 Marguerite Blvd
Newconcord KY 42076

Reported: 01/21/09
Client: CE648309
Batch No: 08121465

This analytical report has been sent via express courier to the Kentucky Division of Water. We recommend that you contact the DOW to ensure delivery of your data.

CORRECTED COPY

SAMPLE CATEGORY = CH
ENTRY POINT SAMPLING

KENTUCKY DIVISION OF WATER / DRINKING WATER BRANCH
SODIUM ANALYSIS REPORT FORM

This Section To Be Completed By Collector

PWS ID KY0183106 Plant ID A Plant Name L H & M WTP Location Code TPA

PWS Name L H & M WATER ASSOCIATION PWS Contact MITCH PACE

PWS Address 66 EDWARDS LANE, BENTON, KY 42025 PWS Phone 270-527-9785

Sample Date (MMDDYYYY) 12152008 Time 1005 Sample Type RT Collector Name Derek Leatherman

RT = Routine (For Compliance)
SP = Special (Not for Compliance)

Signature/Date

This Section To Be Completed By Lab

Lab ID 00030 Lab Sample Number AG40712 Lab Phone 270.821.7375

Lab Analyst Jared Daugherty 01/21/2009 Lab Supervisor Mark DeMan 01/21/09

Signature/Date Signature/Date

Analyte Code	Analyte Name	Analysis Method Code	<	Result (mg/L) -or- Lab Minimum Reporting Limit (mg/L)	Analysis Date (MMDDYYYY)
1052	Sodium	799		3.92	01062009

CORRECTED COPY

The signatories of this form certify by their signatures that collection and analysis of the water sample analyzed and the resulting data hereby submitted, were completed in accordance with the provisions of 401 KAR Chapter 8; and that the data submitted on this form is a true an accurate report of the results of collection and analysis performed pursuant to the above-referenced regulations. Violations of 401 KAR Chapter 8 are subject to severe penalties prescribed in KRS 224.99-010, up to $25,000 fine per day per violation and in some cases a violation may subject the violator to prison.

McCoy & McCoy Laboratories, Inc.
P. O. Box 907
Madisonville, KY 42431
www.mccoylabs.com

Lexington KY 859-299-7775
Paducah KY 270-444-6547
Madisonville KY 270-821-7375
Pikeville KY 606-432-3104
M.DeMoss@mccoylabs.com

Center Ridge Water District #4
Attn: William Duncan
69 Marguerite Blvd
Newconcord KY 42076

Reported: 01/09/09
Client: CE648302
Batch No: 08121463
Sample ID: AG40709

This analytical report has been sent via express courier to the Kentucky Division of Water. We recommend that you contact the DOW to ensure delivery of your data.

SAMPLE CATEGORY = CH
DISTRIBUTION SAMPLING

KENTUCKY DIVISION OF WATER / DRINKING WATER BRANCH

SECONDARY CONTAMINANT ANALYSIS REPORT FORM

PWS ID KY0183106 Plant ID A or Dist ____ Plant Name or Location Name L H & M WTP Location Code TPA

PWS Name L H & M WATER ASSOCIATION

PWS Address 66 EDWARDS LANE, BENTON, KY 42025

PWS Contact MITCH PACE

PWS Phone 270-527-9785

Sample Date (MMDDYYYY) 12152008 Time 1005 Sample Type RT

RT = Routine (For Compliance)
SP = Special (Not for Compliance)

Collector Name Derek Leatherman

Signature/Date

Lab ID: 00030 Lab Sample Number AG40709 Lab Phone 270.821.7375

Lab Analyst Matt Taylor 01/09/2009

Signature/Date

Lab Supervisor Mark DeMan 01/09/09

Signature/Date

Analyte Code	Analyte Name	Analysis Method Code	<	Result (mg/L) -or- Lab Minimum Reporting Limit (mg/L)	Analysis Date (MMDDYYYY)
1002	Aluminum	797	<	0.01	01082009
1017	Chloride	720		2.63	12162008
1022	Copper	799		0.003	01082009
1025	Fluoride	720		0.2	12162008
1028	Iron	799	<	0.02	01062008
1032	Manganese	799	<	0.002	01082009
1050	Silver	799	<	0.002	01082009
1055	Sulfate	720		1.21	12162008
1095	Zinc	799		0.006	01082009
1905	Color (cu)	957	<	1.0	12162008
1910	Corrosivity (LANG)	838	-	2.56	01092009
1920	Odor (TON)	833	<	1.0	12162008
1925	pH	734		6.58	12152008
1930	Total Dissolved Solids (TDS)	806		50.0	12172008
2905	Foaming Agents/Surfactants	755	<	0.1	12162008

The signatories of this form certify by their signatures that collection and analysis of the water sample analyzed and the resulting data hereby submitted, were completed in accordance with the provisions of 401 KAR Chapter 8; and that the data submitted on this form is a true an accurate report of the results of collection and analysis performed pursuant to the above-referenced regulations. Violations of 401 KAR Chapter 8 are subject to severe penalties prescribed in KRS 224.99-010, up to $25,000 fine per day per violation and in some cases a violation may subject the violator to prison.

McCoy & McCoy Laboratories, Inc.
P. O. Box 907
Madisonville, KY 42431
www.mccoylabs.com

Chain of Custody

Lexington KY 859-299-7775
Madisonville KY 270-821-7375
Paducah KY 270-444-6547
Pikeville KY 606-432-3104
Louisville KY 502-961-0001

Route: 54 Project SDWA

Center Ridge Water District #4
Attn: William Duncan
69 Marguerite Blvd
Newconcord KY 42076

Collected by: MMLI/DPL
Collection Date: 12/15/08
Collection Time: 1005
P. O. No:
PhoneFax: 270-436-6304

CE648302 Center Ridge WD #4 Secondary 0183106 TPA

Logbatch 08121463
Composite Sample Start Date _____ Time _____
Sample Nos AG40709
Stop Date _____ Time _____
Field Data By: MMLI/DPL Date 12/15/08 Time 1005 Fecal Date _____ Time _____
pH Meter#: _____ pH: 6.58 DO Meter#: _____ DO: _____
Temp: 13.9 Cl: _____ Flow: _____ Units: _____ Matrix: Liquid

Collection Method	Test	Analysis Requested	Bottle Type and Preservative
G / C	DW_MBAS_1	MBAS as LAS Mdv	1 Liter Amber Wide Mouth Glass 4 c
G / C	DW_HARDCA_1	Hardness, Calcium	
G / C	DW_COLORPCU_	PCU Color Mdv	1 Liter Plastic 4 c
G / C	MM_ICPU_1	Multi Matrix IC Pick Up from Login	
G / C	DW_TDS_1	Total Dissolved Solids Mdv	1 Liter Plastic 4 c
G / C	DW_ALKPHENO_	Alkalinity, Pheno Mdv	1 Liter Plastic 4 c
G / C	TEMPFLD3	Temperature, C (Field)	
G / C	DW_CL_1	Chloride by IC Mdv	1 Liter Plastic 4 c
G / C	DW_ALKBICAR_1	Alkalinity, Bicarbonate (HCO3) Mdv	1 Liter Plastic 4 c
G / C	DW_ALKCAR_1	Alkalinity, Carbonate (CO3) Mdv	1 Liter Plastic 4 c
G / C	DW_FIC_1	Fluoride by IC Mdv	1 Liter Plastic 4 c
G / C	DW_ALKTOT_1	Total Alkalinity by Titrimetry Mdv	1 Liter Plastic 4 c
G / C	DW_METPU_1	Drinking Water Metals Pick Up from Lo	
G / C	PH_FLD3	pH (Field)	
G / C	DW_ALICPMS_1	Aluminum by ICP/MS	250 ml Plastic Nitric Acid 4 c
G / C	DW_CAICPAES_1	Calcium by ICP/AES	250 ml Plastic Nitric Acid 4 c
G / C	DW_TURBIDITY_	Turbidity Mdv	1 Liter Plastic 4 c
G / C	DW_FEICPAES_1	Iron by ICP/AES	250 ml Plastic Nitric Acid 4 c
G / C	DW_SO4IC_1	Sulfate by IC Mdv	250 ml Plastic 4 c
G / C	DW_HARDNESS_	Hardness as CaCO3 Mdv	250 ml Plastic Nitric Acid 4 c
G / C	DW_ODOR_1	Odor Mdv	2oz Wide Mouth Glass 4 c
G / C	DW_ZNICPMS_1	Zinc by ICP/MS	250 ml Plastic Nitric Acid 4 c
G / C	DW_AGICPMS_1	Silver by ICP/MS	250 ml Plastic Nitric Acid 4 c
G / C	DW_MNICPMS_1	Manganese by ICP/MS	250 ml Plastic Nitric Acid 4 c
G / C	DW_CUICPMS_1	Copper by ICP/MS	250 ml Plastic Nitric Acid 4 c

Relinquished by: [signature] Date/Time: 12/15/08 / 1005
Received by: Mindy Martin Date/Time: 12/15/08 1330
Relinquished by: _____ Date/Time: _____
Received by: _____ Date/Time: _____
Relinquished by: _____ Date/Time: _____
Received by: _____ Date/Time: _____

McCoy & McCoy Laboratories, Inc.
P.O. Box 907
Madisonville, KY 42431
270-821-7375

SAMPLE ACCEPTANCE/CONDITION CHECKLIST

Client: Center Ridge Logbatch No. 08121463 Lab No. AG40709

Sample Delivery Type (circle): US Postal UPS FedEx MMLI Client _____

Sample Receipt Checklist:

	YES	NO
a. Were custody seals used on outer package, and/or sample containers?		✓
b. Were sample containers received damaged?		✓
c. Cooler Temp. 7°C (circle) Acceptable Unacceptable		
d. Were the samples accompanied with a Chain-of-Custody or other transferable document?	✓	
e. Was all information recorded to defend the sample transfer & submittal?	✓	
f. Is each sample and container uniquely identified on the COC?	✓	
g. Were all samples in appropriate containers?	✓	
h. Did all samples have appropriate volumes?	✓	
i. Were all samples submitted within sample holding times?	✓	
j. Were "Collection Methods" recorded?	✓	
k. Were "Flow Units" recorded?		✓

Logged In By: MLM Date: 12/15/08

Exceptions:

Action Required:

_____Client Informed on ____/____/____ Client Rep:_____By:_____

_____No Action Required, see notes

_____No Action Required

Reviewed By: BKH Project Manager Date: 12/22/08

Q:\MADISONVILLE\ADMIN\Forms & Labels\Sample Checklist.doc

SAMPLE CATEGORY = TC

KENTUCKY DIVISION OF WATER / DRINKING WATER BRANCH
BACTERIOLOGICAL ANALYSIS REPORT FORM

General Information -- This Section To Be Completed By Collector

PWS ID: KY0180502

Compliance Period (MMYYYY): 012009

PWS Name: CRWD # 3

PWS Contact: Bill

Collection Date (MMDDYYYY): 01072009
(All Samples Reported on this Form were Collected on this Date.)

PWS Address: 69 Marguerite Ave Concord Ky 42076

PWS Phone: 270-436-6304

Collector Name: William Duncan
Signature/Date

General Information -- This Section To Be Completed By Lab

Lab ID: 00031

Lab Receipt Date (MMDDYYYY): 01072009

Total Coliform Analysis Method Code: 328

Analysis Date (MMDDYYYY): 01072009

E Coli Analysis Method Code:

Lab Analyst: Mindy Martin 1/8/09
Signature/Date

Lab Supervisor: [signature] 1/8/09
Signature/Date

Sample Information -- This Section To Be Completed By Collector

Sample Type (RT, RP, or SP) (See Key)	Special Sample Reason (A, B, C, D, or E) (See Key)	Replacement Sample? (Y or Blank)	Location Code (See Instructions)	Repeat Location Code (DN, UP, or OR) (See Key)	Sample Time (24 hr)	Free Chlorine (Required for all disinfectants except Chloramine)	Total Chlorine (Required when disinfectant is Chloramine)
SP	E		001		0700	1.15	1.21
SP	E		003		0720	1.18	1.24
SP	E		005		0730	1.19	1.26
						.	.
						.	.
						.	.
						.	.
						.	.
						.	.
						.	.

Analysis Information -- This Section To Be Completed By Lab

Lab Sample Number	Analysis Time (24 hr)	Result (Total Coliform Count - or - TNTC - or - CNFG) (See Key)	Total Coliform (P/A)	E Coli (P/A)	Lab Sample Number of Original Sample (Required for Repeat and/or Replacement Samples) (See Instructions)
AG44400	1405		A		
AG44401	1405		A		
AG44402	1405		A		

e signatories of this form certify by their signatures that collection and analysis of e water sample analyzed and the resulting data hereby submitted, were mpleted in accordance with the provisions of 401 KAR Chapter 8, specifically cluding but not limited to 401 KAR 8:200, Section 1 and 401 KAR 8:040; and that e data submitted on this form is a true and accurate report of the results of llection and analysis performed pursuant to the above-referenced regulations. olations of 401 KAR Chapter 8 are subject to severe penalties prescribed in KRS 4.99-010, up to $25,000 fine per day per violation and in some cases a violation

BACTERIOLOGICAL ANALYSIS REPORT FROM KEY

Sample Type:	RT = Routine (For Compliance)	RP = Repeat (For Compliance)	SP = Special (Not for Compliance)
Special Sample Reason: (Only If Sample Type = SP)	A = Suspected Contamination B = New Plant, Modification, or Line Extension	C = Treatment Modification D = Study/Investigation	E = Line Break, Emergency Repair

McCoy & McCoy Laboratories, Inc.
www.mccoylabs.com

PO Box 907 * 825 Industrial Rd.
Madisonville, KY 42431
270.821.7375
270.825.9200 fax

2456 Fortune Dr., Suite 160
Lexington, KY 40509
859.299.7775
859.299.7785 fax

173 Island Creek Rd.
Pikeville, KY 41501
606.432.3104
606.432.3171 fax

1800 Kentucky Ave.
Paducah, KY 42003
270.444.6547
270.444.6572 fax

5510 Fern Valley Rd.
Suite 104 Promenade Pavilion
Louisville, KY 40228
502.961.0001

CHAIN OF CUSTODY and ANALYTICAL REQUEST

Please print legibly.

SHADED AREA FOR LAB USE ONLY

Client: CRUDE 3

Phone/Email:

Bill To:

Phone/Email

Send Results to:

Phone/Email:

Compliance Monitoring (check one)? Yes ☐ No ☐

Samples Chlorinated (check one)? Yes ☐ No ☐

PO#

PWS ID#

STATE

MMLI Quote # (if applicable)

Batch#

Project Name

Collected by (Signature): [illegible]

Sample ID#	COLLECTION DATE	COLLECTION TIME (24 hr)	SAMPLE DESCRIPTION Composite samples indicate begin time, end time and temp (°C) at end time	SAMPLE ANALYSIS REQUESTED Method ID if known (i.e. 8260B, 6010B/7470A...)	SAMPLE REMARKS (i.e. composite, grab, field readings, corrosive...)	Field Data pH S.U.	Field Data Temp °C	# OF CONTAINERS	MATRIX CODE (See Lower Left)	PRESERVATIVE CODE (See Lower Left)
	1-7-09	0700	001	S.P. E						
	1-7-09	0720	003	S.P. E						
	1-7-09	0730	005	S.P. E						

1. Expedited services not available for all services, please call. 2. Samples received unannounced with less than 48 hours holding time remaining may be subject to additional surcharges. 3. Lab reserves the right to return unused portions of samples to client.

Relinquished by: (Signature)	Received By: (Signature)	DATE	TIME (24 hr)
[illegible] Duncan	[illegible]	1-7-09	0900
Relinquished by: (Signature)	Received by: (Signature)	DATE	TIME (24 hr)
Relinquished by: (Signature)	Received for MMLI by:	DATE	TIME (24 hr)

CONDITIONS UPON RECEIPT (CHECK ONE)
☐ Iced wet/Blue ____ °C Temp
☐ Ambient ____ °C Temp ☐ N/A

	YES	NO	N/A
Custody seals present/intact?	☐	☐	☐
Broken containers?	☐	☐	☐
COC agree with sample Labels?	☐	☐	☐
Correct containers for testing?	☐	☐	☐
Headspace issues acceptable?	☐	☐	☐
Holding time(s) acceptable?	☐	☐	☐
Preservative pH's acceptable?	☐	☐	☐
Was pH left unadjusted?	☐	☐	☐
All samples listed on COC received?	☐	☐	☐
Samples properly preserved?	☐	☐	☐
Client's sample documents received?	☐	☐	☐
COC been relinquished?	☐	☐	☐
Are tests listed for each sample?	☐	☐	☐

Method of Shipment (check one): UPS ☐ FedEx ☐ MMLI ☐ US Postal ☐ Client ☐

Date Shipped:
Airbill#:
Logged in by: Location:
LAB NOTES:
Follow up action required: YES ☐ NO ☐
Client informed on:
Client Rep.:
By:
Reviewed by:
Date:

MATRIX CODES:
DW – Drinking Water
SW – Solid Waste
SO – Soil/Solid
SL – Sludge
GW – Ground Water
WW – Waste Water
OL – Oil
SU – Surface Water

PRESERVATIVE CODES:
NI – Nitric acid (HNO_3)
HA – Hydrochloric Acid (HCl)
SH – Sodium Hydroxide (NaOH)
ST – Sodium Thiosulfate
ZN – Zinc acetate
SA – Sulfuric Acid (H_2SO_4)
4C – 4°C
AA – Ascorbic Acid
NO – No preservative
SS – Sodium sulfite

SAMPLE CATEGORY = TC

KENTUCKY DIVISION OF WATER / DRINKING WATER BRANCH
BACTERIOLOGICAL ANALYSIS REPORT FORM

General Information – This Section To Be Completed By Collector

PWS ID: KY0180549

Compliance Period (MMYYYY): 012009

PWS Name: CRWD # 1

PWS Contact: Bill

Collection Date (MMDDYYYY): 01/21/2009
(All Samples Reported on this Form were Collected on this Date.)

PWS Address: 69 Marguerite New Concord Ky 42076

PWS Phone: 270-436-6304

Collector Name: William Duncan 1-21-09
Signature/Date

General Information – This Section To Be Completed By Lab

Lab ID: 00031

Lab Receipt Date (MMDDYYYY): 01/21/2009

Total Coliform Analysis Method Code: 328

Analysis Date (MMDDYYYY): 01/21/2009

E Coli Analysis Method Code:

Lab Analyst: Mindy Martin 1/22/09
Signature/Date

Lab Supervisor: 01/22/09
Signature/Date

Sample Information – This Section To Be Completed By Collector / Analysis Information – This Section To Be Completed By Lab

Sample Type (RT, RP, or SP) (See Key)	Special Sample Reason (A, B, C, D, or E) (See Key)	Replacement Sample? (Y or Blank)	Location Code (See Instructions)	Repeat Location Code (DN, UP, or OR) (See Key)	Sample Time (24 hr)	Free Chlorine (Required for all disinfectants except Chloramine)	Total Chlorine (Required when disinfectant is Chloramine)	Lab Sample Number	Analysis Time (24 hr)	Result (Total Coliform Count - or - TNTC - or - CNFG) (See Key)	Total Coliform (P/A)	E Coli (P/A)	Lab Sample Number of Original Sample (Required for Repeat and/or Replacement Samples) (See Instructions)
RT			005		0730	1.51	1.28	AG47068	1400		A		

The signatories of this form certify by their signatures that collection and analysis of the water sample analyzed and the resulting data hereby submitted, were completed in accordance with the provisions of 401 KAR Chapter 8, specifically including but not limited to 401 KAR 8:200, Section 1 and 401 KAR 8:040; and that the data submitted on this form is a true and accurate report of the results of collection and analysis performed pursuant to the above-referenced regulations. Violations of 401 KAR Chapter 8 are subject to severe penalties prescribed in KRS 224.99-010, up to $25,000 fine per day per violation and in some cases a violation may subject the violator to prison.

BACTERIOLOGICAL ANALYSIS REPORT FROM KEY

Sample Type:	RT = Routine (For Compliance)	RP = Repeat (For Compliance)	SP = Special (Not for Compliance)
Special Sample Reason: (Only If Sample Type = SP)	A = Suspected Contamination B = New Plant, Modification, or Line Extension	C = Treatment Modification D = Study/Investigation	E = Line Break, Emergency Repair
Repeat Location Code: (Only If Sample Type = RP)	DN = Downstream	UP = Upstream	OR = Original Site

McCoy & McCoy Laboratories, Inc.
www.mccoylabs.com

PO Box 907 * 825 Industrial Rd.
Madisonville, KY 42431
270.821.7375
270.825.9200 fax

2456 Fortune Dr., Suite 160
Lexington, KY 40509
859.299.7775
859.299.7785 fax

173 Island Creek Rd.
Pikeville, KY 41501
606.432.3104
606.432.3171 fax

1800 Kentucky Ave.
Paducah, KY 42003
270.444.6547
270.444.6572 fax

5510 Fern Valley Rd.
Suite 104 Promenade Pavilion
Louisville, KY 40228
502.961.0001

CHAIN OF CUSTODY and ANALYTICAL REQUEST

Please print legibly

SHADED AREA FOR LAB USE ONLY

Client: CRWD #1

Phone/Email:

Bill To:

Phone/Email

Send Results to:

Phone/Email:

Compliance Monitoring (check one)? Yes ☐ No ☐

Samples Chlorinated (check one)? Yes ☐ No ☐

PO#

PWS ID#

STATE

MMLI Quote # (if applicable)

Batch#

Project Name

Collected by (Signature): RJD

Sample ID#	COLLECTION DATE	COLLECTION TIME (24 hr)	SAMPLE DESCRIPTION Composite samples indicate begin time, end time and temp (°C) at end time	SAMPLE ANALYSIS REQUESTED Method ID if known (i.e. 8260B, 6010B/7470A...)	SAMPLE REMARKS (i.e. composite, grab, field readings, corrosive...)	Field Data pH S.U.	Field Data Temp °C	# OF CONTAINERS	MATRIX CODE (See Lower Left)	PRESERVATIVE CODE (See Lower Left)
	1-21-09	0720	005	RT						

1. Expedited services not available for all services, please call. 2. Samples received unannounced with less than 48 hours holding time remaining may be subject to additional surcharges. 3. Lab reserves the right to return unused portions of samples to client.

Relinquished by: (Signature)	Received By: (Signature)	DATE	TIME (24 hr)
[illegible]	[illegible]	1-21-09	0900
Relinquished by: (Signature)	Received by: (Signature)	DATE	TIME (24 hr)
Relinquished by: (Signature)	Received for MMLI by:	DATE	TIME (24 hr)

CONDITIONS UPON RECEIPT (CHECK ONE)
☐ Iced wet/Blue ____ C Temp
☐ Ambient ____ C Temp ☐ N/A

	YES	NO	N/A
Custody seals present/intact?	☐	☐	☐
Broken containers?	☐	☐	☐
COC agree with sample Labels?	☐	☐	☐
Correct containers for testing?	☐	☐	☐
Headspace issues acceptable?	☐	☐	☐
Holding time(s) acceptable?	☐	☐	☐
Preservative pH is acceptable?	☐	☐	☐
Was pH left unadjusted?	☐	☐	☐
All samples listed on COC received?	☐	☐	☐
Samples properly preserved?	☐	☐	☐
Client's sample documents received?	☐	☐	☐
COC been relinquished?	☐	☐	☐
Are tests listed for each sample?	☐	☐	☐

Method of Shipment (check one) UPS ☐ FedEx ☐ MMLI ☐ US Postal ☐ Client ☐

Date Shipped:
Airbill#:
Logged in by: Location:
LAB NOTES:
Follow up action required: YES ☐ NO ☐
Client informed on:
Client Rep:
BY:
Reviewed by:
Date:

MATRIX CODES:
DW – Drinking Water
SW – Solid Waste
SO – Soil/Solid
SL – Sludge
GW – Ground Water
WW – Waste Water
OL – Oil
SU – Surface Water

PRESERVATIVE CODES:
NI – Nitric acid (HNO_3)
HA – Hydrochloric Acid (HCl)
SH – Sodium Hydroxide (NaOH)
ST – Sodium Thiosulfate
ZN – Zinc acetate
SA – Sulfuric Acid (H_2SO_4)
4C – 4°C
AA – Ascorbic Acid
NO – No preservative
SS – Sodium sulfite

McCoy & McCoy Laboratories, Inc.
P. O. Box 907
Madisonville, KY 42431
www.mccoylabs.com

Lexington KY 859-299-7775
Madisonville KY 270-821-7375
Paducah KY 270-444-6547
Pikeville KY 606-432-3104
M.DeMoss@mccoylabs.com

Center Ridge Water System
Attn: William Duncan
69 Marguerite Blvd
Newconcord KY 42076

Reported: 01/21/09
Client: CE648413
Batch No: 08121451

This analytical report has been sent via express courier to the Kentucky Division of Water. We recommend that you contact the DOW to ensure delivery of your data.

CORRECTED COPY

SAMPLE CATEGORY = CH
ENTRY POINT SAMPLING

KENTUCKY DIVISION OF WATER / DRINKING WATER BRANCH
SODIUM ANALYSIS REPORT FORM

This Section To Be Completed By Collector

PWS ID KY0180549 Plant ID A Plant Name Center Ridge WTP #1 Location Code TPA

PWS Name CENTER RIDGE WATER SYSTEM PWS Contact WILLIAM M DUNCAN

PWS Address 281 MORRIS RD, DEXTER, KY 42036 PWS Phone 270-474-8267

Sample Date (MMDDYYYY) 12152008 Time 0944 Sample Type RT Collector Name Derek Leatherman

RT = Routine (For Compliance)
SP = Special (Not for Compliance)

Signature/Date

This Section To Be Completed By Lab

Lab ID 00030 Lab Sample Number AG40676 Lab Phone 270.821.7375

Lab Analyst Jared Daugherty 01/21/2009 Signature/Date

Lab Supervisor Mark DeMoss 01/21/09 Signature/Date

Analyte Code	Analyte Name	Analysis Method Code	<	Result (mg/L) -or- Lab Minimum Reporting Limit (mg/L)	Analysis Date (MMDDYYYY)
1052	Sodium	799		3.94	01062009

CORRECTED COPY

The signatories of this form certify by their signatures that collection and analysis of the water sample analyzed and the resulting data hereby submitted, were completed in accordance with the provisions of 401 KAR Chapter 8; and that the data submitted on this form is a true an accurate report of the results of collection and analysis performed pursuant to the above-referenced regulations. Violations of 401 KAR Chapter 8 are subject to severe penalties prescribed in KRS 224.99-010, up to $25,000 fine per day per violation and in some cases a violation may subject the violator to prison.

SAMPLE CATEGORY = TC

KENTUCKY DIVISION OF WATER / DRINKING WATER BRANCH
BACTERIOLOGICAL ANALYSIS REPORT FORM

General Information – This Section To Be Completed By Collector

PWS ID: KY0180509

Compliance Period (MMYYYY): 012009

PWS Name: CRWD # 2

PWS Contact: Bill

Collection Date (MMDDYYYY): 01/21/2009 (All Samples Reported on this Form were Collected on this Date.)

PWS Address: 69 Marguerite Ave Concord Ky 42076

PWS Phone: 270-436-6304

Collector Name: William Duncan 1-21-09 (Signature/Date)

General Information – This Section To Be Completed By Lab

Lab ID: 00037

Lab Receipt Date (MMDDYYYY): 01/21/2009

Total Coliform Analysis Method Code: 92X

Analysis Date (MMDDYYYY): 01/21/2009

E Coli Analysis Method Code:

Lab Analyst: Mindy Martin 1/22/09 (Signature/Date)

Lab Supervisor: 1/27/09 (Signature/Date)

Sample Information – This Section To Be Completed By Collector / Analysis Information – This Section To Be Completed By Lab

Sample Type (RT, RP, or SP) (See Key)	Special Sample Reason (A, B, C, D, or E) (See Key)	Replacement Sample? (Y or Blank)	Location Code (See Instructions)	Repeat Location Code (DN, UP, or OR) (See Key)	Sample Time (24 hr)	Free Chlorine (Required for all disinfectants except Chloramine)	Total Chlorine (Required when disinfectant is Chloramine)	Lab Sample Number	Analysis Time (24 hr)	Result (Total Coliform Count - or - TNTC - or - CNFG) (See Key)	Total Coliform (P/A)	E Coli (P/A)	Lab Sample Number of Original Sample (Required for Repeat and/or Replacement Samples) (See Instructions)
RT			065		0630	1.38	1.35	A647070	1420		A		

The signatories of this form certify by their signatures that collection and analysis of the water sample analyzed and the resulting data hereby submitted, were completed in accordance with the provisions of 401 KAR Chapter 8, specifically including but not limited to 401 KAR 8:200, Section 1 and 401 KAR 8:040; and that the data submitted on this form is a true and accurate report of the results of collection and analysis performed pursuant to the above-referenced regulations. Violations of 401 KAR Chapter 8 are subject to severe penalties prescribed in KRS 224.99-010, up to $25,000 fine per day per violation and in some cases a violation may subject the violator to prison.

BACTERIOLOGICAL ANALYSIS REPORT FROM KEY

Sample Type:	RT = Routine (For Compliance)	RP = Repeat (For Compliance)	SP = Special (Not for Compliance)
Special Sample Reason: (Only If Sample Type = SP)	A = Suspected Contamination B = New Plant, Modification, or Line Extension	C = Treatment Modification D = Study/Investigation	E = Line Break, Emergency Repair
Repeat Location Code: (Only If Sample Type = RP)	DN = Downstream	UP = Upstream	OR = Original Site

McCoy & McCoy Laboratories, Inc.
www.mccoylabs.com

PO Box 907 * 825 Industrial Rd.
Madisonville, KY 42431
270.821.7375
270.825.9200 fax

2456 Fortune Dr., Suite 160
Lexington, KY 40509
859.299.7775
859.299.7785 fax

173 Island Creek Rd.
Pikeville, KY 41501
606.432.3104
606.432.3171 fax

1800 Kentucky Ave.
Paducah, KY 42003
270.444.6547
270.444.6572 fax

5510 Fern Valley Rd.
Suite 104 Promenade Pavilion
Louisville, KY 40228
502.961.0001

SHADED AREA FOR LAB USE ONLY

CHAIN OF CUSTODY and ANALYTICAL REQUEST

Please print legibly.

Client: CRWU #2	Bill To:	Send Results to:	Compliance Monitoring (check one)? Yes ☐ No ☐ / Samples Chlorinated (check one)? Yes ☐ No ☐	PO#
Phone/Email:	Phone/Email	Phone/Email:	PWS ID# / STATE	
Batch#	Project Name	Collected by (Signature): [signature]	MMLI Quote # (if applicable)	

Sample ID#	COLLECTION DATE	COLLECTION TIME (24 hr)	SAMPLE DESCRIPTION Composite samples indicate begin time, end time and temp (°C) at end time	SAMPLE ANALYSIS REQUESTED Method ID if known (i.e. 8260B, 6010B/7470A...)	SAMPLE REMARKS (i.e. composite, grab, field readings, corrosive...)	Field Data pH S.U.	Field Data Temp °C	# OF CONTAINERS	MATRIX CODE (See Lower Left)	PRESERVATIVE CODE (See Lowerr Left)
	[illegible]	0630	005	RT						

1. Expedited services not available for all services, please call. 2. Samples received unannounced with less than 48 hours holding time remaining may be subject to additional surcharges. 3. Lab reserves the right to return unused portions of samples to client.

Relinquished by: (Signature)	Received By: (Signature)	DATE	TIME (24 hr)
[signature]	[signature]	[illegible]	0950
Relinquished by: (Signature)	Received by: (Signature)	DATE	TIME (24 hr)
Relinquished by: (Signature)	Received for MMLI by:	DATE	TIME (24 hr)

MATRIX CODES:
DW – Drinking Water
SW – Solid Waste
SO – Soil/Solid
SL – Sludge
GW – Ground Water
WW – Waste Water
OL – Oil
SU – Surface Water

PRESERVATIVE CODES:
NI – Nitric acid (HNO_3)
HA – Hydrochloric Acid (HCl)
SH – Sodium Hydroxide (NaOH)
ST – Sodium Thiosulfate
ZN – Zinc acetate
SA – Sulfuric Acid (H_2SO_4)
4C – 4°C
AA – Ascorbic Acid
NO – No preservative
SS – Sodium sulfite

CONDITIONS UPON RECEIPT (CHECK ONE)
☐ Iced wet/Blue ____ °C Temp
☐ Ambient ____ °C Temp ☐ N/A

	YES	NO	N/A
Custody seals present/intact?	☐	☐	☐
Broken containers?	☐	☐	☐
COC agree with sample Labels?	☐	☐	☐
Correct containers for testing?	☐	☐	☐
Headspace issues acceptable?	☐	☐	☐
Holding time(s) acceptable?	☐	☐	☐
Preservative pH's acceptable?	☐	☐	☐
Was pH left unadjusted?	☐	☐	☐
All samples listed on COC received?	☐	☐	☐
Samples properly preserved?	☐	☐	☐
Client's sample documents received?	☐	☐	☐
COC been relinquished?	☐	☐	☐
Are tests listed for each sample?	☐	☐	☐

Method of Shipment (check one): US Postal ☐ UPS ☐ FedEx ☐ MMLI ☐ Client ☐
Date Shipped:
Airbill#:
Logged in by: Location:
LAB NOTES:
Follow up action required: YES ☐ NO ☐
Client informed on:
Client Rep:
By:
Reviewed by:
Date:

McCoy & McCoy Laboratories, Inc.
P. O. Box 907
Madisonville, KY 42431
www.mccoylabs.com

Lexington KY 859-299-7775
Madisonville KY 270-821-7375
Paducah KY 270-444-6547
Pikeville KY 606-432-3104

M.DeMoss@mccoylabs.com

Center Ridge Water Dist #2
Attn: William Duncan
69 Marguerite Blvd
Newconcord KY 42076

Reported: 01/21/09
Client: CE648512
Batch No: 08121456

This analytical report has been sent via express courier to the Kentucky Division of Water. We recommend that you contact the DOW to ensure delivery of your data.

CORRECTED COPY

SAMPLE CATEGORY = CH
ENTRY POINT SAMPLING

KENTUCKY DIVISION OF WATER / DRINKING WATER BRANCH
SODIUM ANALYSIS REPORT FORM

This Section To Be Completed By Collector

PWS ID KY0180509 Plant ID A Plant Name CENTER RIDGE #2 WTP Location Code TPA

PWS Name CENTER RIDGE WATER DISTRICT #2 PWS Contact WILLIAM M DUNCAN

PWS Address 281 MORRIS RD, DEXTER, KY 42036 PWS Phone 270-474-8267

Sample Date (MMDDYYYY) 12152008 Time 1046 Sample Type RT Collector Name Derek Leatherman

RT = Routine (For Compliance)
SP = Special (Not for Compliance)

Signature/Date

This Section To Be Completed By Lab

Lab ID 00030 Lab Sample Number AG40699 Lab Phone 270.821.7375

Lab Analyst Jared Daugherty 01/21/2009 Lab Supervisor Mark DeMow 01/21/09

Signature/Date Signature/Date

Analyte Code	Analyte Name	Analysis Method Code	<	Result (mg/L) -or- Lab Minimum Reporting Limit (mg/L)	Analysis Date (MMDDYYYY)
1052	Sodium	799		3.12	01062009

CORRECTED COPY

The signatories of this form certify by their signatures that collection and analysis of the water sample analyzed and the resulting data hereby submitted, were completed in accordance with the provisions of 401 KAR Chapter 8; and that the data submitted on this form is a true an accurate report of the results of collection and analysis performed pursuant to the above-referenced regulations. Violations of 401 KAR Chapter 8 are subject to severe penalties prescribed in KRS 224.99-010, up to $25,000 fine per day per violation and in some cases a violation may subject the violator to prison.

SAMPLE CATEGORY = TC

KENTUCKY DIVISION OF WATER / DRINKING WATER BRANCH
BACTERIOLOGICAL ANALYSIS REPORT FORM

General Information – This Section To Be Completed By Collector

PWS ID: KY0180502

PWS Name: CRWD # 3

PWS Contact: Bill

PWS Address: 69 Marguerite New Concord Ky 42076

PWS Phone: 270-436-6304

Compliance Period (MMYYYY): 012009

Collection Date (MMDDYYYY): 01212009
(All Samples Reported on this Form were Collected on this Date.)

Collector Name: William Duncan 1-21-09
Signature/Date

General Information – This Section To Be Completed By Lab

Lab ID: 00031

Lab Receipt Date (MMDDYYYY): 01212009

Analysis Date (MMDDYYYY): 01212009

Total Coliform Analysis Method Code: 328

E Coli Analysis Method Code:

Lab Analyst: Mindy Martin 1/22/09
Signature/Date

Lab Supervisor: [signature] 1/22/09
Signature/Date

Sample Information – This Section To Be Completed By Collector

Sample Type (RT, RP, or SP) (See Key)	Special Sample Reason (A, B, C, D, or E) (See Key)	Replacement Sample? (Y or Blank)	Location Code (See Instructions)	Repeat Location Code (DN, UP, or OR) (See Key)	Sample Time (24 hr)	Free Chlorine (Required for all disinfectants except Chloramine)	Total Chlorine (Required when disinfectant is Chloramine)
RT			005		0600	1.31	1.39
						.	.
						.	.
						.	.
						.	.
						.	.
						.	.
						.	.
						.	.
						.	.

Analysis Information – This Section To Be Completed By Lab

Lab Sample Number	Analysis Time (24 hr)	Result (Total Coliform Count - or - TNTC - or - CNFG) (See Key)	Total Coliform (P/A)	E Coli (P/A)	Lab Sample Number of Original Sample (Required for Repeat and/or Replacement Samples) (See Instructions)
AG47071	1420		A		

The signatories of this form certify by their signatures that collection and analysis of the water sample analyzed and the resulting data hereby submitted, were completed in accordance with the provisions of 401 KAR Chapter 8, specifically including but not limited to 401 KAR 8:200, Section 1 and 401 KAR 8:040; and that the data submitted on this form is a true and accurate report of the results of collection and analysis performed pursuant to the above-referenced regulations. Violations of 401 KAR Chapter 8 are subject to severe penalties prescribed in KRS 224.99-010, up to $25,000 fine per day per violation and in some cases a violation may subject the violator to prison.

BACTERIOLOGICAL ANALYSIS REPORT FROM KEY

Sample Type:	RT = Routine (For Compliance)	RP = Repeat (For Compliance)	SP = Special (Not for Compliance)
Special Sample Reason: (Only if Sample Type = SP)	A = Suspected Contamination B = New Plant, Modification, or Line Extension	C = Treatment Modification D = Study/Investigation	E = Line Break, Emergency Repair
Repeat Location Code: (Only if Sample Type = RP)	DN = Downstream	UP = Upstream	OR = Original Site

McCoy & McCoy Laboratories, Inc.
www.mccoylabs.com

PO Box 907 * 825 Industrial Rd.
Madisonville, KY 42431
270.821.7375
270.825.9200 fax

2456 Fortune Dr., Suite 160
Lexington, KY 40509
859.299.7775
859.299.7785 fax

173 Island Creek Rd.
Pikeville, KY 41501
606.432.3104
606.432.3171 fax

1800 Kentucky Ave.
Paducah, KY 42003
270.444.6547
270.444.6572 fax

5510 Fern Valley Rd.
Suite 104 Promenade Pavilion
Louisville, KY 40228
502.961.0001

SHADED AREA FOR LAB USE ONLY

CHAIN OF CUSTODY and ANALYTICAL REQUEST

Please print legibly.

Client:	Bill To:	Send Results to:	Compliance Monitoring (check one)? Yes ☐ No ☐ Samples Chlorinated (check one)? Yes ☐ No ☐	PO#
CKWD H3				
Phone/Email:	Phone/Email	Phone/Email:	PWS ID# / STATE	
Batch#	Project Name	Collected by (Signature):	MMLI Quote # (if applicable)	

Sample ID#	COLLECTION DATE	COLLECTION TIME (24 hr)	SAMPLE DESCRIPTION Composite samples indicate begin time, end time and temp (°C) at end time	SAMPLE ANALYSIS REQUESTED Method ID if known (i.e. 8260B, 6010B/7470A...)	SAMPLE REMARKS (i.e. composite, grab, field readings, corrosive...)	Field Data pH S.U.	Field Data Temp °C	# OF CONTAINERS	MATRIX CODE (See Lower Left)	PRESERVATIVE CODE (See Lower Left)
	1-21-09	0960	005	KT						

1. Expedited services not available for all services, please call. 2. Samples received unannounced with less than 48 hours holding time remaining may be subject to additional surcharges. 3. Lab reserves the right to return unused portions of samples to client.

Relinquished by: (Signature)	Received By: (Signature)	DATE	TIME (24 hr)
[illegible]	[illegible]	[illegible]	[illegible]
Relinquished by: (Signature)	Received by: (Signature)	DATE	TIME (24 hr)
Relinquished by: (Signature)	Received for MMLI by:	DATE	TIME (24 hr)

CONDITIONS UPON RECEIPT (CHECK ONE)
☐ Iced wet/Blue °C Temp
☐ Ambient °C Temp ☐ N/A

	YES	NO	N/A
Custody seals present/intact?	☐	☐	☐
Broken containers?	☐	☐	☐
COC agree with sample Labels?	☐	☐	☐
Correct containers for testing?	☐	☐	☐
Headspace issues acceptable?	☐	☐	☐
Holding time(s) acceptable?	☐	☐	☐
Preservative pH's acceptable?	☐	☐	☐
Was pH left unadjusted?	☐	☐	☐
All samples listed on COC received?	☐	☐	☐
Samples properly preserved?	☐	☐	☐
Client's sample documents received?	☐	☐	☐
COC been relinquished?	☐	☐	☐
Are tests listed for each sample?	☐	☐	☐

Method of Shipment (check one): US Postal ☐ UPS ☐ FedEx ☐ MMLI ☐ Client ☐
Date Shipped:
Airbill #:
Logged in by: Location:
LAB NOTES
Follow-up action required: YES ☐ NO ☐
Client informed on:
Client Rep.
By:
Reviewed by:
Date:

MATRIX CODES:
DW – Drinking Water
SW – Solid Waste
SO – Soil/Solid
SL – Sludge
GW – Ground Water
WW – Waste Water
OL – Oil
SU – Surface Water

PRESERVATIVE CODES:
NI – Nitric acid (HNO_3)
HA – Hydrochloric Acid (HCl)
SH – Sodium Hydroxide (NaOH)
ST – Sodium Thiosulfate
ZN – Zinc acetate
SA – Sulfuric Acid (H_2SO_4)
4C – 4°C
AA – Ascorbic Acid
NO – No preservative
SS – Sodium sulfite

McCoy & McCoy Laboratories, Inc.
P. O. Box 907
Madisonville, KY 42431
www.mccoylabs.com

Lexington KY 859-299-7775
Paducah KY 270-444-6547
Madisonville KY 270-821-7375
Pikeville KY 606-432-3104
M.DeMoss@mccoylabs.com

Center Ridge Water Dist #3
Attn: William Duncan
69 Marguerite Blvd
Newconcord KY 42076

Reported: 01/21/09
Client: CE648610
Batch No: 08121459

This analytical report has been sent via express courier to the Kentucky Division of Water. We recommend that you contact the DOW to ensure delivery of your data.

CORRECTED COPY

SAMPLE CATEGORY = CH
ENTRY POINT SAMPLING

KENTUCKY DIVISION OF WATER / DRINKING WATER BRANCH
SODIUM ANALYSIS REPORT FORM

This Section To Be Completed By Collector

PWS ID KY0180502 Plant ID A Plant Name Center Ridge #3 WTP Location Code TPA

PWS Name CENTER RIDGE WATER DISTRICT #3 PWS Contact WILLIAM M DUNCAN

PWS Address 281 MORRIS RD, DEXTER, KY 42036 PWS Phone 270-474-8267

Sample Date (MMDDYYYY) 12152008 Time 1055 Sample Type RT Collector Name Derek Leatherman

RT = Routine (For Compliance)
SP = Special (Not for Compliance)

Signature/Date

This Section To Be Completed By Lab

Lab ID 00030 Lab Sample Number AG40702 Lab Phone 270.821.7375

Lab Analyst Jared Daugherty 01/21/2009 Lab Supervisor Mark DiMon 01/21/09

Signature/Date Signature/Date

Analyte Code	Analyte Name	Analysis Method Code	<	Result (mg/L) -or- Lab Minimum Reporting Limit (mg/L)	Analysis Date (MMDDYYYY)
1052	Sodium	799		3.08	01062009

CORRECTED COPY

The signatories of this form certify by their signatures that collection and analysis of the water sample analyzed and the resulting data hereby submitted, were completed in accordance with the provisions of 401 KAR Chapter 8; and that the data submitted on this form is a true an accurate report of the results of collection and analysis performed pursuant to the above-referenced regulations. Violations of 401 KAR Chapter 8 are subject to severe penalties prescribed in KRS 224.99-010, up to $25,000 fine per day per violation and in some cases a violation may subject the violator to prison.

SAMPLE CATEGORY = TC

KENTUCKY DIVISION OF WATER / DRINKING WATER BRANCH
BACTERIOLOGICAL ANALYSIS REPORT FORM

General Information – This Section To Be Completed By Collector

PWS ID: KY0183106

PWS Name: CRWD # 4

PWS Contact: Bill

PWS Address: 69 Marguerite Ave Concord Ky 42076

PWS Phone: 270-436-6304

Compliance Period (MMYYYY): 012009

Collection Date (MMDDYYYY): 012120 09
(All Samples Reported on this Form were Collected on this Date.)

Collector Name: William Duncan 1-21-09
Signature/Date

General Information – This Section To Be Completed By Lab

Lab ID: 00031

Lab Receipt Date (MMDDYYYY): 012120 09

Analysis Date (MMDDYYYY): 012120 09

Total Coliform Analysis Method Code: 328

E Coli Analysis Method Code:

Lab Analyst: Mindy Martin 1-22-09
Signature/Date

Lab Supervisor: 1/22/09
Signature/Date

Sample Information – This Section To Be Completed By Collector

Sample Type (RT, RP, or SP) (See Key)	Special Sample Reason (A, B, C, D, or E) (See Key)	Replacement Sample? (Y or Blank)	Location Code (See Instructions)	Repeat Location Code (DN, UP, or OR) (See Key)	Sample Time (24 hr)	Free Chlorine (Required for all disinfectants except Chloramine)	Total Chlorine (Required when disinfectant is Chloramine)
RT			020		0800	1.08	1.15

Analysis Information – This Section To Be Completed By Lab

Lab Sample Number	Analysis Time (24 hr)	Result (Total Coliform Count - or - TNTC - or - CNFG) (See Key)	Total Coliform (P/A)	E Coli (P/A)	Lab Sample Number of Original Sample (Required for Repeat and/or Replacement Samples) (See Instructions)
A54702	1420		A		

The signatories of this form certify by their signatures that collection and analysis of the water sample analyzed and the resulting data hereby submitted, were completed in accordance with the provisions of 401 KAR Chapter 8, specifically including but not limited to 401 KAR 8:200, Section 1 and 401 KAR 8:040; and that the data submitted on this form is a true and accurate report of the results of collection and analysis performed pursuant to the above-referenced regulations. Violations of 401 KAR Chapter 8 are subject to severe penalties prescribed in KRS 224.99-010, up to $25,000 fine per day per violation and in some cases a violation may subject the violator to prison.

BACTERIOLOGICAL ANALYSIS REPORT FROM KEY

Sample Type:	RT = Routine (For Compliance)	RP = Repeat (For Compliance)	SP = Special (Not for Compliance)
Special Sample Reason: (Only If Sample Type = SP)	A = Suspected Contamination B = New Plant, Modification, or Line Extension	C = Treatment Modification D = Study/Investigation	E = Line Break, Emergency Repair
Repeat Location Code:	DN = Downstream	UP = Upstream	OR = Original Site

McCoy & McCoy Laboratories, Inc.
www.mccoylabs.com

PO Box 907 * 825 Industrial Rd.
Madisonville, KY 42431
270.821.7375
270.825.9200 fax

2456 Fortune Dr., Suite 160
Lexington, KY 40509
859.299.7775
859.299.7785 fax

173 Island Creek Rd.
Pikeville, KY 41501
606.432.3104
606.432.3171 fax

1800 Kentucky Ave.
Paducah, KY 42003
270.444.6547
270.444.6572 fax

5510 Fern Valley Rd.
Suite 104 Promenade Pavilion
Louisville, KY 40228
502.961.0001

SHADED AREA FOR LAB USE ONLY

CHAIN OF CUSTODY and ANALYTICAL REQUEST

Please print legibly.

Client:	Bill To:	Send Results to:	Compliance Monitoring (check one)? Yes ☐ No ☐ Samples Chlorinated (check one)? Yes ☐ No ☐	PO#
CRWD #4				
Phone/Email:	Phone/Email	Phone/Email:	PWS ID# / STATE	
Batch#	Project Name	Collected by (Signature):	MMLI Quote # (if applicable)	

Sample ID#	COLLECTION DATE	COLLECTION TIME (24 hr)	SAMPLE DESCRIPTION Composite samples indicate begin time, end time and temp (°C) at end time	SAMPLE ANALYSIS REQUESTED Method ID if known (i.e. 8260B, 6010B/7470A...)	SAMPLE REMARKS (i.e. composite, grab, field readings, corrosive...)	Field Data pH S.U.	Field Data Temp °C	# OF CONTAINERS	MATRIX CODE (See Lower Left)	PRESERVATIVE CODE (See Lower Left)
	1-21-09	0800	0900	RT						

1. Expedited services not available for all services, please call. 2. Samples received unannounced with less than 48 hours holding time remaining may be subject to additional surcharges. 3. Lab reserves the right to return unused portions of samples to client.

Relinquished by: (Signature)	Received By: (Signature)	DATE	TIME (24 hr)
[illegible]	[illegible]	1-21-09	0900
Relinquished by: (Signature)	Received by: (Signature)	DATE	TIME (24 hr)
Relinquished by: (Signature)	Received for MMLI by:	DATE	TIME (24 hr)

CONDITIONS UPON RECEIPT (CHECK ONE)
☐ Iced wet/Blue °C Temp
☐ Ambient °C Temp ☐ N/A

	YES	NO	N/A
Custody seals present/intact?	☐	☐	☐
Broken containers?	☐	☐	☐
COC agree with sample Labels?	☐	☐	☐
Correct containers for testing?	☐	☐	☐
Headspace issues acceptable?	☐	☐	☐
Holding time(s) acceptable?	☐	☐	☐
Preservative pH's acceptable?	☐	☐	☐
Was pH left unadjusted?	☐	☐	☐
All samples listed on COC received?	☐	☐	☐
Samples properly preserved?	☐	☐	☐
Client's sample documents received?	☐	☐	☐
COC been relinquished?	☐	☐	☐
Are tests listed for each sample?	☐	☐	☐

Method of Shipment (check one) UPS ☐ FedEx ☐ MMLI ☐ US Postal ☐ Client ☐
Date Shipped:
Airbill#:
Logged in by: Location:
LAB NOTES:
Follow up action required YES ☐ NO ☐
Client informed on:
Client Rep:
By:
Reviewed by:
Date:

MATRIX CODES:
DW – Drinking Water
SW – Solid Waste
SO – Soil/Solid
SL – Sludge
GW – Ground Water
WW – Waste Water
OL – Oil
SU – Surface Water

PRESERVATIVE CODES:
NI – Nitric acid (HNO_3)
HA – Hydrochloric Acid (HCl)
SH – Sodium Hydroxide (NaOH)
ST – Sodium Thiosulfate
ZN – Zinc acetate
SA – Sulfuric Acid (H_2SO_4)
4C – 4°C
AA – Ascorbic Acid
NO – No preservative
SS – Sodium sulfite

SAMPLE CATEGORY = TC

KENTUCKY DIVISION OF WATER / DRINKING WATER BRANCH
BACTERIOLOGICAL ANALYSIS REPORT FORM

General Information – This Section To Be Completed By Collector

PWSID: KY0180549

PWS Name: CRWD #1

PWS Contact: Bill

PWS Address: 69 Marguerite Rd Concord Ky 42076

PWS Phone: 270-436-6304

Compliance Period (MMYYYY): 022009

Collection Date (MMDDYYYY): 02/12/2009
(All Samples Reported on this Form were Collected on this Date.)

Collector Name: William Duncan 2-12-09
Signature/Date

General Information – This Section To Be Completed By Lab

Lab ID: 00001

Lab Receipt Date (MMDDYYYY): 02/12/2009

Analysis Date (MMDDYYYY): 02/12/2009

Total Coliform Analysis Method Code: 923

E Coli Analysis Method Code:

Lab Analyst: Mindy Martin 2/13/09
Signature/Date

Lab Supervisor: 2.13.09
Signature/Date

Sample Information – This Section To Be Completed By Collector

Sample Type (RT, RP, or SP) (See Key)	Special Sample Reason (A, B, C, D, or E) (See Key)	Replacement Sample? (Y or Blank)	Location Code (See Instructions)	Repeat Location Code (DN, UP, or OR) (See Key)	Sample Time (24 hr)	Free Chlorine (Required for all disinfectants except Chloramine)	Total Chlorine (Required when disinfectant is Chloramine)
SP	D		001		0930	1.28	1.35
SP	D		002		0940	1.31	1.38
SP	D		003		0950	1.27	1.34
						.	.
						.	.
						.	.
						.	.
						.	.
						.	.
						.	.

Analysis Information – This Section To Be Completed By Lab

Lab Sample Number	Analysis Time (24 hr)	Result (Total Coliform Count - or - TNTC - or - CNFG) (See Key)	Total Coliform (P/A)	E Coli (P/A)	Lab Sample Number of Original Sample (Required for Repeat and/or Replacement Samples) (See Instructions)
AS51157	1415		A		
AS51158	1415		A		
AS51159	1415		A		

The signatories of this form certify by their signatures that collection and analysis of the water sample analyzed and the resulting data hereby submitted, were completed in accordance with the provisions of 401 KAR Chapter 8, specifically including but not limited to 401 KAR 8:200, Section 1 and 401 KAR 8:040; and that the data submitted on this form is a true and accurate report of the results of collection and analysis performed pursuant to the above-referenced regulations. Violations of 401 KAR Chapter 8 are subject to severe penalties prescribed in KRS 224.99-010, up to $25,000 fine per day per violation and in some cases a violation may subject the violator to prison.

BACTERIOLOGICAL ANALYSIS REPORT FROM KEY

Sample Type:	RT = Routine (For Compliance)	RP = Repeat (For Compliance)	SP = Special (Not for Compliance)
Special Sample Reason: (Only If Sample Type = SP)	A = Suspected Contamination B = New Plant, Modification, or Line Extension	C = Treatment Modification D = Study/Investigation	E = Line Break, Emergency Repair
Repeat Location Code:	DN = Downstream	UP = Upstream	OR = Original Site

McCoy & McCoy Laboratories, Inc.
www.mccoylabs.com

PO Box 907 * 825 Industrial Rd.
Madisonville, KY 42431
270.821.7375
270.825.9200 fax

2456 Fortune Dr., Suite 160
Lexington, KY 40509
859.299.7775
859.299.7785 fax

173 Island Creek Rd.
Pikeville, KY 41501
606.432.3104
606.432.3171 fax

1800 Kentucky Ave.
Paducah, KY 42003
270.444.6547
270.444.6572 fax

5510 Fern Valley Rd.
Suite 104 Promenade Pavilion
Louisville, KY 40228
502.961.0001

SHADED AREA FOR LAB USE ONLY

CHAIN OF CUSTODY and ANALYTICAL REQUEST

Please print legibly

Client: CRWD #1	Bill To:	Send Results to:	Compliance Monitoring (check one)? Yes ☐ No ☐ Samples Chlorinated (check one)? Yes ☐ No ☐	PO#
Phone/Email:	Phone/Email	Phone/Email:	PWS ID# / STATE	
Batch#	Project Name	Collected by (Signature):	MMLI Quote # (if applicable)	

Sample ID#	COLLECTION DATE	COLLECTION TIME (24 hr)	SAMPLE DESCRIPTION Composite samples indicate begin time, end time and temp (°C) at end time	SAMPLE ANALYSIS REQUESTED Method ID if known (i.e. 8260B, 6010B/7470A...)	SAMPLE REMARKS (i.e. composite, grab, field readings, corrosive...)	Field Data pH S.U.	Field Data Temp °C	# OF CONTAINERS	MATRIX CODE (See Lower Left)	PRESERVATIVE CODE (See Lower Left)
	2-12-09	0730	001	SP						
	2-12-09	0740	002	SP						
	2-12-09	0750	003	SP						

1. Expedited services not available for all services, please call. 2. Samples received unannounced with less than 48 hours holding time remaining may be subject to additional surcharges. 3. Lab reserves the right to return unused portions of samples to client.

Relinquished by: (Signature)	Received By: (Signature)	DATE	TIME (24 hr)
[signature]	Mindy Martin	2-12-09	1110
Relinquished by: (Signature)	Received by: (Signature)	DATE	TIME (24 hr)
Relinquished by: (Signature)	Received for MMLI by:	DATE	TIME (24 hr)

MATRIX CODES:
DW – Drinking Water
SW – Solid Waste
SO – Soil/Solid
SL – Sludge
GW – Ground Water
WW – Waste Water
OL – Oil
SU – Surface Water

PRESERVATIVE CODES:
NI – Nitric acid (HNO_3)
HA – Hydrochloric Acid (HCl)
SH – Sodium Hydroxide (NaOH)
ST – Sodium Thiosulfate
ZN – Zinc acetate
SA – Sulfuric Acid (H_2SO_4)
4C – 4°C
AA – Ascorbic Acid
NO – No preservative
SS – Sodium sulfite

CONDITIONS UPON RECEIPT (CHECK ONE)
☐ Iced wet/Blue ____ °C Temp
☐ Ambient ____ °C Temp ☐ N/A

	YES	NO	N/A
Custody seals present/intact?	☐	☐	☐
Broken containers?	☐	☐	☐
COC agree with sample Labels?	☐	☐	☐
Correct containers for testing?	☐	☐	☐
Headspace issues acceptable?	☐	☐	☐
Holding time(s) acceptable?	☐	☐	☐
Preservative pH's acceptable?	☐	☐	☐
Was pH left unadjusted?	☐	☐	☐
All samples listed on COC received?	☐	☐	☐
Samples properly preserved?	☐	☐	☐
Client's sample documents received?	☐	☐	☐
COC been relinquished?	☐	☐	☐
Are tests listed for each sample?	☐	☐	☐

Method of Shipment (check one): UPS ☐ FedEx ☐ MMLI ☐ US Postal ☐ Client ☐
Date Shipped:
Airbill #:
Logged in by: ____ Location: ____
LAB NOTES:
Follow up action required: YES ☐ NO ☐
Client informed on:
Client Rep:
By:
Reviewed by:
Date:

SAMPLE CATEGORY = TC

KENTUCKY DIVISION OF WATER / DRINKING WATER BRANCH
BACTERIOLOGICAL ANALYSIS REPORT FORM

General Information – This Section To Be Completed By Collector

PWS ID: KY0180509

PWS Name: CRWD # 2

PWS Contact: Bill

PWS Address: 69 Marguerite New Concord Ky 42076

PWS Phone: 270-436-6304

Compliance Period (MMYYYY): 022009

Collection Date (MMDDYYYY): 02122009
(All Samples Reported on this Form were Collected on this Date.)

Collector Name: William Duncan 2-12-09
Signature/Date

General Information – This Section To Be Completed By Lab

Lab ID: 00001

Lab Receipt Date (MMDDYYYY): 02122009

Analysis Date (MMDDYYYY): 02122009

Total Coliform Analysis Method Code: 020

E Coli Analysis Method Code:

Lab Analyst: Mindy Martin 2/13/09
Signature/Date

Lab Supervisor: 2/13/09
Signature/Date

Sample Information – This Section To Be Completed By Collector / Analysis Information – This Section To Be Completed By Lab

Sample Type (RT, RP, or SP) (See Key)	Special Sample Reason (A, B, C, D, or E) (See Key)	Replacement Sample? (Y or Blank)	Location Code (See Instructions)	Repeat Location Code (DN, UP, or OR) (See Key)	Sample Time (24 hr)	Free Chlorine (Required for all disinfectants except Chloramine)	Total Chlorine (Required when disinfectant is Chloramine)	Lab Sample Number	Analysis Time (24 hr)	Result (Total Coliform Count - or - TNTC - or - CNFG) (See Key)	Total Coliform (P/A)	E Coli (P/A)	Lab Sample Number of Original Sample (Required for Repeat and/or Replacement Samples) (See Instructions)
SP	D		001		0630	1.18	1.25	A65115H	1475		A		
SP	D		002		0640	1.23	1.28	A65115G	1415		A		
SP	D		003		0650	1.19	1.26	A65115G	1415		A		

The signatories of this form certify by their signatures that collection and analysis of the water sample analyzed and the resulting data hereby submitted, were completed in accordance with the provisions of 401 KAR Chapter 8, specifically including but not limited to 401 KAR 8:200, Section 1 and 401 KAR 8:040; and that the data submitted on this form is a true and accurate report of the results of collection and analysis performed pursuant to the above-referenced regulations. Violations of 401 KAR Chapter 8 are subject to severe penalties prescribed in KRS 224.99-010, up to $25,000 fine per day per violation and in some cases a violation may subject the violator to prison.

BACTERIOLOGICAL ANALYSIS REPORT FROM KEY

Sample Type:	RT = Routine (For Compliance)	RP = Repeat (For Compliance)	SP = Special (Not for Compliance)
Special Sample Reason: (Only If Sample Type = SP)	A = Suspected Contamination B = New Plant, Modification, or Line Extension	C = Treatment Modification D = Study/Investigation	E = Line Break, Emergency Repair
Repeat Location Code: (Only If Sample Type = RP)	DN = Downstream	UP = Upstream	OR = Original Site

McCoy & McCoy Laboratories, Inc.
www.mccoylabs.com

PO Box 907 * 825 Industrial Rd.
Madisonville, KY 42431
270.821.7375
270.825.9200 fax

2456 Fortune Dr., Suite 160
Lexington, KY 40509
859.299.7775
859.299.7785 fax

173 Island Creek Rd.
Pikeville, KY 41501
606.432.3104
606.432.3171 fax

1800 Kentucky Ave.
Paducah, KY 42003
270.444.6547
270.444.6572 fax

5510 Fern Valley Rd.
Suite 104 Promenade Pavilion
Louisville, KY 40228
502.961.0001

CHAIN OF CUSTODY and ANALYTICAL REQUEST

Please print legibly

SHADED AREA FOR LAB USE ONLY

Client: CRWD # 2

Phone/Email:

Bill To:

Phone/Email

Send Results to:

Phone/Email:

Compliance Monitoring (check one)? Yes ☐ No ☐

Samples Chlorinated (check one)? Yes ☐ No ☐

PO#

PWS ID#

STATE

Batch#

Project Name

Collected by (Signature): BW

MMLI Quote # (if applicable)

Sample ID#	COLLECTION DATE	TIME (24 hr)	SAMPLE DESCRIPTION Composite samples indicate begin time, end time and temp (°C) at end time	SAMPLE ANALYSIS REQUESTED Method ID if known (i.e. 8260B, 6010B/7470A...)	SAMPLE REMARKS (i.e. composite, grab, field readings, corrosive...)	Field Data pH S.U.	Field Data Temp °C	# OF CONTAINERS	MATRIX CODE (See Lower Left)	PRESERVATIVE CODE (See Lower Left)
	2-12-09	0630	002	SP						
	2-12-09	0640	002	SP						
	2-12-09	0650	003	SP						

1. Expedited services not available for all services, please call. 2. Samples received unannounced with less than 48 hours holding time remaining may be subject to additional surcharges. 3. Lab reserves the right to return unused portions of samples to client.

Relinquished by: (Signature)	Received By: (Signature)	DATE	TIME (24 hr)
[illegible]	[illegible]	2-12-09	1110
Relinquished by: (Signature)	Received by: (Signature)	DATE	TIME (24 hr)
Relinquished by: (Signature)	Received for MMLI by:	DATE	TIME (24 hr)

CONDITIONS UPON RECEIPT (CHECK ONE)
☐ Iced wet/Blue ____ °C Temp
☐ Ambient ____ °C Temp ☐ N/A

	YES	NO	N/A
Custody seals present/intact?	☐	☐	☐
Broken containers?	☐	☐	☐
COC agree with sample Labels?	☐	☐	☐
Correct containers for testing?	☐	☐	☐
Headspace issues acceptable?	☐	☐	☐
Holding time(s) acceptable?	☐	☐	☐
Preservative pH is acceptable?	☐	☐	☐
Was pH left unadjusted?	☐	☐	☐
All samples listed on COC received?	☐	☐	☐
Samples properly preserved?	☐	☐	☐
Client's sample documents received?	☐	☐	☐
COC been relinquished?	☐	☐	☐
Are tests listed for each sample?	☐	☐	☐

Method of Shipment (check one) UPS ☐ FedEx ☐ MMLI ☐ US Postal ☐ Client ☐

Date Shipped:
Airbill#:

Logged in by: Location:

LAB NOTES:

Follow up action required: YES ☐ NO ☐

Client informed on:

Client Rep:

By:

Reviewed by:

Date:

MATRIX CODES:
DW – Drinking Water
SW – Solid Waste
SO – Soil/Solid
SL – Sludge
GW – Ground Water
WW – Waste Water
OL – Oil
SU – Surface Water

PRESERVATIVE CODES:
NI – Nitric acid (HNO_3)
HA – Hydrochloric Acid (HCl)
SH – Sodium Hydroxide (NaOH)
ST – Sodium Thiosulfate
ZN – Zinc acetate
SA – Sulfuric Acid (H_2SO_4)
4C – 4°C
AA – Ascorbic Acid
NO – No preservative
SS – Sodium sulfite

SAMPLE CATEGORY = TC

KENTUCKY DIVISION OF WATER / DRINKING WATER BRANCH
BACTERIOLOGICAL ANALYSIS REPORT FORM

General Information – This Section To Be Completed By Collector

PWS ID: KY0180502

Compliance Period (MMYYYY): 022009

PWS Name: CRWD #3

PWS Contact: Bill

Collection Date (MMDDYYYY): 02/12/2009
(All Samples Reported on this Form were Collected on this Date.)

PWS Address: 69 Marguerite New Concord Ky 42076

PWS Phone: 270-436-6304

Collector Name: William Duncan 2-12-09
Signature/Date

General Information – This Section To Be Completed By Lab

Lab ID: 00031

Lab Receipt Date (MMDDYYYY): 02/12/2009

Total Coliform Analysis Method Code: 021

Analysis Date (MMDDYYYY): 02/12/2009

E Coli Analysis Method Code:

Lab Analyst: Mindy Martin 2/13/09
Signature/Date

Lab Supervisor: 2/13/09
Signature/Date

Sample Information – This Section To Be Completed By Collector

Sample Type (RT, RP, or SP) (See Key)	Special Sample Reason (A, B, C, D, or E) (See Key)	Replacement Sample? (Y or Blank)	Location Code (See Instructions)	Repeat Location Code (DN, UP, or OR) (See Key)	Sample Time (24 hr)	Free Chlorine (Required for all disinfectants except Chloramine)	Total Chlorine (Required when disinfectant is Chloramine)
SP	D		001		0600	1.39	1.45
SP	D		002		0610	1.41	1.48
SP	D		003		0620	1.36	1.42
						.	.
						.	.
						.	.
						.	.
						.	.
						.	.
						.	.

Analysis Information – This Section To Be Completed By Lab

Lab Sample Number	Analysis Time (24 hr)	Result (Total Coliform Count - or - TNTC - or - CNFG) (See Key)	Total Coliform (P/A)	E Coli (P/A)	Lab Sample Number of Original Sample (Required for Repeat and/or Replacement Samples) (See Instructions)
A51157	1415		A		
A51158	1415		A		
A51159	1415		A		

The signatories of this form certify by their signatures that collection and analysis of the water sample analyzed and the resulting data hereby submitted, were completed in accordance with the provisions of 401 KAR Chapter 8, specifically including but not limited to 401 KAR 8:200, Section 1 and 401 KAR 8:040; and that the data submitted on this form is a true and accurate report of the results of collection and analysis performed pursuant to the above-referenced regulations. Violations of 401 KAR Chapter 8 are subject to severe penalties prescribed in KRS 224.99-010, up to $25,000 fine per day per violation and in some cases a violation may subject the violator to prison.

BACTERIOLOGICAL ANALYSIS REPORT FROM KEY

Sample Type:	RT = Routine (For Compliance)	RP = Repeat (For Compliance)	SP = Special (Not for Compliance)
Special Sample Reason: (Only If Sample Type = SP)	A = Suspected Contamination B = New Plant, Modification, or Line Extension	C = Treatment Modification D = Study/Investigation	E = Line Break, Emergency Repair
Repeat Location Code: (Only If Sample Type = RP)	DN = Downstream	UP = Upstream	OR = Original Site

McCoy & McCoy Laboratories, Inc.
www.mccoylabs.com

PO Box 907 * 825 Industrial Rd
Madisonville, KY 42431
270.821.7375
270.825.9200 fax

2456 Fortune Dr., Suite 160
Lexington, KY 40509
859.299.7775
859.299.7785 fax

173 Island Rd.
Pikeville, KY 41501
606.432.3104
606.432.3717 fax

1800 Kentucky Ave
Paducah, KY 42003
270.444.6547
270.444.6572 fax

5510 Fern Valley Rd
Suite 104 Promenade Pavilion
Louisville, KY 40228
502.961.0001

SHADED AREA FOR LAB USE ONLY

CHAIN OF CUSTODY and ANALYTICAL REQUEST

Please print legibly

Client: CRWD # 3	Bill To:	Send Results to:	Compliance Monitoring (check one)? Yes ☐ No ☐ Samples Chlorinated (check one)? Yes ☐ No ☐	PO#
Phone/Email:	Phone/Email	Phone/Email:	PWS ID# / STATE	
Batch#	Project Name	Collected by (Signature): Bill	MMLI Quote # (if applicable)	

Sample ID#	COLLECTION DATE	COLLECTION TIME (24 hr)	PROJECT/SITE NAME Bio. composite samples indicate begin time, end time and temp (°C) at end time	SAMPLE ANALYSIS REQUESTED Method ID if known (i.e. 8260B, 6010B/7470A...)	SAMPLE REMARKS (i.e. composite, grab, field readings, corrosive...)	Field Data pH S.U.	Field Data Temp °C	# OF CONTAINERS	MATRIX CODE (See Lower Left)	PRESERVATIVE CODE (See Lower Left)
	2-10-09	0600	001	SP						
	2-10-09	0610	002	SP						
	2-10-09	0620	003	SP						

1. Expedited services not available for all services, please call. 2. Samples received unannounced with less than 48 hours holding time remaining may be subject to additional surcharges. 3. Lab reserves the right to return unused portions of samples to client.

Relinquished by: (Signature)	Received By: (Signature)	DATE	TIME (24 hr)
William Duncan	[illegible]	2-10-09	1110
Relinquished by: (Signature)	Received by: (Signature)	DATE	TIME (24 hr)
Relinquished by: (Signature)	Received for MMLI by:	DATE	TIME (24 hr)

MATRIX CODES:
DW – Drinking Water, GW – Ground Water, SW – Surface Water, WW – Waste Water, SO – Soil/Solid, OL – Oil, SL – Sludge, SW – Solid Waste

PRESERVATIVE CODES:
NI – Nitric acid (HNO_3), HA – Hydrochloric Acid (HCl), SH – Sodium Hydroxide (NaOH), ST – Sodium Thiosulfate, ZN – Zinc acetate, SA – Sulfuric Acid (H_2SO_4), 4C – 4°C, AA – Ascorbic Acid, NO – No preservative, SS – Sodium sulfite

CONDITIONS UPON RECEIPT (CHECK ONE)
☐ Iced wet/Blue ____ C Temp
☐ Ambient ____ C Temp
☐ N/A

	YES	NO
Custody seals present/intact?	☐	☐
Broken containers?	☐	☐
COC agree with sample Labels?	☐	☐
Correct containers for testing?	☐	☐
Headspace issues acceptable?	☐	☐
Holding time(s) acceptable?	☐	☐
Preservative pH's acceptable?	☐	☐
Was pH left unadjusted?	☐	☐
All samples listed on COC received?	☐	☐
Samples properly preserved?	☐	☐
Client's sample documents received?	☐	☐
COC been relinquished?	☐	☐
Are tests listed for each sample?	☐	☐

Method of Shipment (check one): UPS ☐ FedEx ☐ MMLI ☐ US Postal ☐ Client ☐
Date Shipped:
Airbill #:
Logged in by: Location:
LAB NOTES
Follow up action required: YES ☐ NO ☐
Client informed on:
Client Rep.:
By:
Reviewed by:
Date:

SPRINT PRINT FORM#6265

SAMPLE CATEGORY = TC

KENTUCKY DIVISION OF WATER / DRINKING WATER BRANCH
BACTERIOLOGICAL ANALYSIS REPORT FORM

General Information – This Section To Be Completed By Collector

PWS ID: KY0183106

PWS Name: CRWD # 4

PWS Contact: Bill

PWS Address: 69 Marguerite New Concord Ky 42076

PWS Phone: 270-436-6304

Compliance Period (MMYYYY): 02/2009

Collection Date (MMDDYYYY): 02/12/2009
(All Samples Reported on this Form were Collected on this Date.)

Collector Name: William Duncan 2-12-09
Signature/Date

General Information – This Section To Be Completed By Lab

Lab ID: 00031

Lab Receipt Date (MMDDYYYY): 02/12/2009

Analysis Date (MMDDYYYY): 02/12/2009

Total Coliform Analysis Method Code: 98

E Coli Analysis Method Code:

Lab Analyst: Mindy Martin 2/13/09
Signature/Date

Lab Supervisor: 2/13/09
Signature/Date

Sample Information – This Section To Be Completed By Collector

Sample Type (RT, RP, or SP) (See Key)	Special Sample Reason (A, B, C, D, or E) (See Key)	Replacement Sample? (Y or Blank)	Location Code (See Instructions)	Repeat Location Code (DN, UP, or OR) (See Key)	Sample Time (24 hr)	Free Chlorine (Required for all disinfectants except Chloramine)	Total Chlorine (Required when disinfectant is Chloramine)
SP	D		001		0810	1.11	1.17
SP	D		003		0820	1.06	1.14
SP	D		013		0830	1.08	1.15

Analysis Information – This Section To Be Completed By Lab

Lab Sample Number	Analysis Time (24 hr)	Result (Total Coliform Count - or - TNTC - or - CNFG) (See Key)	Total Coliform (P/A)	E Coli (P/A)	Lab Sample Number of Original Sample (Required for Repeat and/or Replacement Samples) (See Instructions)
AS51160	1415		A		
AS51161	1415		A		
AS51162	1415		A		

The signatories of this form certify by their signatures that collection and analysis of the water sample analyzed and the resulting data hereby submitted, were completed in accordance with the provisions of 401 KAR Chapter 8, specifically including but not limited to 401 KAR 8:200, Section 1 and 401 KAR 8:040; and that the data submitted on this form is a true and accurate report of the results of collection and analysis performed pursuant to the above-referenced regulations. Violations of 401 KAR Chapter 8 are subject to severe penalties prescribed in KRS 224.99-010(2), up to $25,000 fine per day per violation and in some cases a violation may subjectivet the violator to prison.

BACTERIOLOGICAL ANALYSIS REPORT FROM KEY

Sample Type:	RT = Routine (For Compliance)	RP = Repeat (For Compliance)	SP = Special (Not for Compliance)
Special Sample Reason: (Only if Sample Type = SP)	A = Suspected Contamination B = New Plant, Modification, or Line Extension	C = Treatment Modification D = Study/Investigation	E = Line Break, Emergency Repair
Repeat Location Code:	DN = Downstream	UP = Upstream	OR = Original Site

McCoy & McCoy Laboratories, Inc.
www.mccoylabs.com

PO Box 907 * 825 Industrial Rd
Madisonville, KY 42431
270.821.7375
270.825.9200 fax

2456 Fortune Dr., Suite 160
Lexington, KY 40509
859.299.7775
859.299.7785 fax

173 Island Rd.
Pikeville, KY 41501
606.432.3104
606.432.3717 fax

1800 Kentucky Ave
Paducah, KY 42003
270.444.6547
270.444.6572 fax

5510 Fern Valley Rd
Suite 104 Promenade Pavilion
Louisville, KY 40228
502.961.0001

SHADED AREA FOR LAB USE ONLY

CHAIN OF CUSTODY and ANALYTICAL REQUEST

Please print legibly.

Client:	Bill To:	Send Results to:	Compliance Monitoring (check one)? Yes ☐ No ☐ Samples Chlorinated (check one)? Yes ☐ No ☐	PO#
CKWD # 4				
Phone/Email:	Phone/Email	Phone/Email:	PWS ID# / STATE	
Batch#	Project Name	Collected by (Signature):	MMLI Quote # (if applicable)	

Sample ID#	COLLECTION DATE	COLLECTION TIME (24 hr)	PROJECT/SITE NAME Bio. composite samples indicate begin time, end time and temp (°C) at end time	SAMPLE ANALYSIS REQUESTED Method ID if known (i.e. 8260B, 6010B/7470A...)	SAMPLE REMARKS (i.e. composite, grab, field readings, corrosive...)	Field Data pH S.U.	Field Data Temp °C	# OF CONTAINERS	MATRIX CODE (See Lower Left)	PRESERVATIVE CODE (See Lower Left)
	2-12-09	0810	001	SP						
	2-12-09	0820	003	SP						
	2-12-09	0820	013	SP						

1. Expedited services not available for all services, please call. 2. Samples received unannounced with less than 48 hours holding time remaining may be subject to additional surcharges. 3. Lab reserves the right to return unused portions of samples to client.

Relinquished by: (Signature)	Received By: (Signature)	DATE	TIME (24 hr)
William Duncan	Michael Martin	2-12-09	1115
Relinquished by: (Signature)	Received by: (Signature)	DATE	TIME (24 hr)
Relinquished by: (Signature)	Received for MMLI by:	DATE	TIME (24 hr)

CONDITIONS UPON RECEIPT (CHECK ONE)
☐ Iced wet/Blue ____ C Temp
☐ Ambient ____ C Temp
☐ N/A

	YES	NO
Custody seals present/intact?	☐	☐
Broken containers?	☐	☐
COC agree with sample Labels?	☐	☐
Correct containers for testing?	☐	☐
Headspace issues acceptable?	☐	☐
Holding time(s) acceptable?	☐	☐
Preservative pH's acceptable?	☐	☐
Was pH left unadjusted?	☐	☐
All samples listed on COC received?	☐	☐
Samples properly preserved?	☐	☐
Client's sample documents received?	☐	☐
COC been relinquished?	☐	☐
Are tests listed for each sample?	☐	☐

Method of Shipment (check one): UPS ☐ FedEx ☐ MMLI ☐ US Postal ☐ Client ☐
Date Shipped:
Airbill #:
Logged in by: Location:
LAB NOTES:
Follow up action required: YES ☐ NO ☐
Client informed on:
Client Rep.
By:
Reviewed by:
Date:

MATRIX CODES:
DW – Drinking Water
SW – Surface Water
SO – Soil/Solid
SL – Sludge
GW – Ground Water
WW – Waste Water
OL – Oil
SW – Solid Waste

PRESERVATIVE CODES:
NI – Nitric acid (HNO_3)
HA – Hydrochloric Acid (HCl)
SH – Sodium Hydroxide (NaOH)
ST – Sodium Thiosulfate
ZN – Zinc acetate
SA – Sulfuric Acid (H_2SO_4)
4C – 4°C
AA – Ascorbic Acid
NO – No preservative
SS – Sodium sulfite

SAMPLE CATEGORY = TC

KENTUCKY DIVISION OF WATER / DRINKING WATER BRANCH
BACTERIOLOGICAL ANALYSIS REPORT FORM

General Information – This Section To Be Completed By Collector

PWS ID: KY0180549

Compliance Period (MMYYYY): 022009

PWS Name: CRWD # 1

PWS Contact: Bill

Collection Date (MMDDYYYY): 02182009
(All Samples Reported on this Form were Collected on this Date.)

PWS Address: 69 Marguerite New Concord Ky 42076

PWS Phone: 270-436-6304

Collector Name: William Duncan 2-18-09
Signature/Date

General Information – This Section To Be Completed By Lab

Lab ID: 00091

Lab Receipt Date (MMDDYYYY): 02182009

Analysis Date (MMDDYYYY): 02192009

Total Coliform Analysis Method Code: 010

E Coli Analysis Method Code:

Lab Analyst: Mindy Martin 2/19/09
Signature/Date

Lab Supervisor: 2/19/09
Signature/Date

Sample Information – This Section To Be Completed By Collector

Analysis Information – This Section To Be Completed By Lab

Sample Type (RT, RP, or SP) (See Key)	Special Sample Reason (A, B, C, D, or E) (See Key)	Replacement Sample? (Y or Blank)	Location Code (See Instructions)	Repeat Location Code (DN, UP, or OR) (See Key)	Sample Time (24 hr)	Free Chlorine (Required for all disinfectants except Chloramine)	Total Chlorine (Required when disinfectant is Chloramine)	Lab Sample Number	Analysis Time (24 hr)	Result (Total Coliform Count - or - TNTC - or - CNFG) (See Key)	Total Coliform (P/A)	E Coli (P/A)	Lab Sample Number of Original Sample (Required for Repeat and/or Replacement Samples) (See Instructions)
RT			004		0215	1.35	1.41	A652539	1375		A		

The signatories of this form certify by their signatures that collection and analysis of the water sample analyzed and the resulting data hereby submitted, were completed in accordance with the provisions of 401 KAR Chapter 8, specifically including but not limited to 401 KAR 8:200, Section 1 and 401 KAR 8:040; and that the data submitted on this form is a true and accurate report of the results of collection and analysis performed pursuant to the above-referenced regulations. Violations of 401 KAR Chapter 8 are subject to severe penalties prescribed in KRS 224.99-010, up to $25,000 fine per day per violation and in some cases a violation may subject the violator to prison.

BACTERIOLOGICAL ANALYSIS REPORT FROM KEY

Sample Type:	RT = Routine (For Compliance)	RP = Repeat (For Compliance)	SP = Special (Not for Compliance)
Special Sample Reason: (Only If Sample Type = SP)	A = Suspected Contamination B = New Plant, Modification, or Line Extension	C = Treatment Modification D = Study/Investigation	E = Line Break, Emergency Repair
Repeat Location Code: (Only If Sample Type = RP)	DN = Downstream	UP = Upstream	OR = Original Site

McCoy & McCoy Laboratories, Inc.
www.mccoylabs.com

PO Box 907 * 825 Industrial Rd.
Madisonville, KY 42431
270.821.7375
270.825.9200 fax

2456 Fortune Dr., Suite 160
Lexington, KY 40509
859.299.7775
859.299.7785 fax

173 Island Creek Rd.
Pikeville, KY 41501
606.432.3104
606.432.3171 fax

1800 Kentucky Ave.
Paducah, KY 42003
270.444.6547
270.444.6572 fax

5510 Fern Valley Rd.
Suite 104 Promenade Pavilion
Louisville, KY 40228
502.961.0001

SHADED AREA FOR LAB USE ONLY

CHAIN OF CUSTODY and ANALYTICAL REQUEST

Please print legibly

Client: CRWDH 1	Bill To:	Send Results to:	Compliance Monitoring (check one)? Yes ☐ No ☐ Samples Chlorinated (check one)? Yes ☐ No ☐	PO#
Phone/Email:	Phone/Email	Phone/Email:	PWS ID# / STATE	
Batch#	Project Name	Collected by (Signature):	MMLI Quote # (if applicable)	

Sample ID#	COLLECTION DATE	TIME (24 hr)	SAMPLE DESCRIPTION Composite samples indicate begin time, end time and temp (°C) at end time	SAMPLE ANALYSIS REQUESTED Method ID if known (i.e. 8260B, 6010B/7470A...)	SAMPLE REMARKS (i.e. composite, grab, field readings, corrosive...)	Field Data pH S.U.	Field Data Temp °C	# OF CONTAINERS	MATRIX CODE (See Lower Left)	PRESERVATIVE CODE (See Lower Left)
	2-17-09	0715	004	RT						

1. Expedited services not available for all services; please call. 2. Samples received unannounced with less than 48 hours holding time remaining may be subject to additional surcharges. 3. Lab reserves the right to return unused portions of samples to client.

Relinquished by: (Signature)	Received By: (Signature)	DATE	TIME (24 hr)
[signature]	[signature]	2-17-09	0900
Relinquished by: (Signature)	Received by: (Signature)	DATE	TIME (24 hr)
Relinquished by: (Signature)	Received for MMLI by:	DATE	TIME (24 hr)

CONDITIONS UPON RECEIPT (CHECK ONE)
☐ Iced wet/Blue °C Temp
☐ Ambient °C Temp ☐ N/A

	YES	NO	N/A
Custody seals present/intact?	☐	☐	☐
Broken containers?	☐	☐	☐
COC agree with sample Labels?	☐	☐	☐
Correct containers for testing?	☐	☐	☐
Headspace issues acceptable?	☐	☐	☐
Holding time(s) acceptable?	☐	☐	☐
Preservative pH's acceptable?	☐	☐	☐
Was pH left unadjusted?	☐	☐	☐
All samples listed on COC received?	☐	☐	☐
Samples properly preserved?	☐	☐	☐
Client's sample documents received?	☐	☐	☐
COC been relinquished?	☐	☐	☐
Are tests listed for each sample?	☐	☐	☐

Method of Shipment (check one): UPS ☐ FedEx ☐ MMLI ☐ US Postal ☐ Client ☐
Date Shipped
Airbill #
Logged in by Location
LAB NOTES
Follow up action required YES ☐ NO ☐
Client informed on
Client Rep
By
Reviewed by
Date

MATRIX CODES:
DW – Drinking Water
SW – Solid Waste
SO – Soil/Solid
SL – Sludge
GW – Ground Water
WW – Waste Water
OL – Oil
SU – Surface Water

PRESERVATIVE CODES:
NI – Nitric acid (HNO_3)
HA – Hydrochloric Acid (HCl)
SH – Sodium Hydroxide (NaOH)
ST – Sodium Thiosulfate
ZN – Zinc acetate
SA – Sulfuric Acid (H_2SO_4)
4C – 4°C
AA – Ascorbic Acid
NO – No preservative
SS – Sodium sulfite

McCoy & McCoy Laboratories, Inc.
P. O. Box 997
Madisonville, KY 42431
www.mccoylabs.com

Chain of Custody

Lexington KY 859-299-7775
Paducah KY 270-444-6547
Louisville KY 502-961-0001
Madisonville KY 270-821-7375
Pikeville KY 606-432-3104

Route: 54 Project SDWA

Collected by: RSS

Collection Date: 2-18-09

Collection Time: 0730

Center Ridge Water System
Attn: William Duncan
69 Marguerite Blvd
Newconcord KY 42076

P. O. No:

Phone/Fax: 270-436-6304

CE648415 Center Ridge WD #1 RAD 0180549

Logbatch

Composite Sample Start Date Time

Sample Nos

Stop Date Time

Field Data By: Date Time Fecal Date Time

pH Meter#: pH: DO Meter#: DO:

Temp: Cl: Flow: Units: Matrix: Liquid

Collection Method	Test	Analysis Requested	Bottle Type and Preservative
G / C	RAD228_1	Radium 228	1 Liter Plastic Nitric Acid 4 c
G / C	ALPHA_1	Gross Alpha - SDWA	1 Liter Plastic Nitric Acid 4 c
G / C	SHIP13_1	UPS Shipping Charge	
G / C	RAD228_SHIP_1	Radium 228 Date sent to sub	
G / C	ALPHA_SHIP_1	Gross Alpha - SDWA Date shipped to	

Relinquished by: William Duncan Date/Time: 2-18-09 0900

Received by: [signature] Date/Time: [illegible]

Relinquished by: Date/Time:

Received by: Date/Time:

Relinquished by: Date/Time:

Received by: Date/Time:

SAMPLE CATEGORY = TC

KENTUCKY DIVISION OF WATER / DRINKING WATER BRANCH
BACTERIOLOGICAL ANALYSIS REPORT FORM

General Information – This Section To Be Completed By Collector

PWS ID: KY0180509

PWS Name: CRWD # 2

PWS Contact: Bill

PWS Address: 69 Marguerite Ave Concord Ky 42076

PWS Phone: 270-436-6304

Compliance Period (MMYYYY): 022009

Collection Date (MMDDYYYY): 02182009
(All Samples Reported on this Form were Collected on this Date.)

Collector Name: William Duncan 2-18-09
Signature/Date

General Information – This Section To Be Completed By Lab

Lab ID: 09021

Lab Receipt Date (MMDDYYYY): 02182009

Analysis Date (MMDDYYYY): 02182009

Total Coliform Analysis Method Code: 98

E Coli Analysis Method Code:

Lab Analyst: Mindy Martin 2/19/09
Signature/Date

Lab Supervisor: 2/19/09
Signature/Date

Sample Information – This Section To Be Completed By Collector

Sample Type (RT, RP, or SP) (See Key)	Special Sample Reason (A, B, C, D, or E) (See Key)	Replacement Sample? (Y or Blank)	Location Code (See Instructions)	Repeat Location Code (DN, UP, or OR) (See Key)	Sample Time (24 hr)	Free Chlorine (Required for all disinfectants except Chloramine)	Total Chlorine (Required when disinfectant is Chloramine)
RT			004		0620	1.31	1.38

Analysis Information – This Section To Be Completed By Lab

Lab Sample Number	Analysis Time (24 hr)	Result (Total Coliform Count - or - TNTC - or - CNFG) (See Key)	Total Coliform (P/A)	E Coli (P/A)	Lab Sample Number of Original Sample (Required for Repeat and/or Replacement Samples) (See Instructions)
A5525560	1315		A		

The signatories of this form certify by their signatures that collection and analysis of the water sample analyzed and the resulting data hereby submitted, were completed in accordance with the provisions of 401 KAR Chapter 8, specifically including but not limited to 401 KAR 8:200, Section 1 and 401 KAR 8:040; and that the data submitted on this form is a true and accurate report of the results of collection and analysis performed pursuant to the above-referenced regulations. Violations of 401 KAR Chapter 8 are subject to severe penalties prescribed in KRS 224.99-010, up to $25,000 fine per day per violation and in some cases a violation may subject the violator to prison.

BACTERIOLOGICAL ANALYSIS REPORT FROM KEY

Sample Type:	RT = Routine (For Compliance)	RP = Repeat (For Compliance)	SP = Special (Not for Compliance)
Special Sample Reason: (Only If Sample Type = SP)	A = Suspected Contamination B = New Plant, Modification, or Line Extension	C = Treatment Modification D = Study/Investigation	E = Line Break, Emergency Repair
Repeat Location Code: (Only If Sample Type = RP)	DN = Downstream	UP = Upstream	OR = Original Site

McCoy & McCoy Laboratories, Inc.
www.mccoylabs.com

PO Box 907 * 825 Industrial Rd.
Madisonville, KY 42431
270.821.7375
270.825.9200 fax

2456 Fortune Dr., Suite 160
Lexington, KY 40509
859.299.7775
859.299.7785 fax

173 Island Creek Rd.
Pikeville, KY 41501
606.432.3104
606.432.3171 fax

1800 Kentucky Ave.
Paducah, KY 42003
270.444.6547
270.444.6572 fax

5510 Fern Valley Rd.
Suite 104 Promenade Pavilion
Louisville, KY 40228
502.961.0001

SHADED AREA FOR LAB USE ONLY

CHAIN OF CUSTODY and ANALYTICAL REQUEST

Please print legibly.

Client: CRWD # 2	Bill To:	Send Results to:	Compliance Monitoring (check one)? Yes ☐ No ☐ Samples Chlorinated (check one)? Yes ☐ No ☐	PO#
Phone/Email:	Phone/Email	Phone/Email:	PWS ID# / STATE	
Batch#	Project Name	Collected by (Signature):	MMLI Quote # (if applicable)	

Sample ID#	COLLECTION DATE	COLLECTION TIME (24 hr)	SAMPLE DESCRIPTION Composite samples indicate begin time, end time and temp (°C) at end time	SAMPLE ANALYSIS REQUESTED Method ID if known (i.e. 8260B, 6010B/7470A...)	SAMPLE REMARKS (i.e. composite, grab, field readings, corrosive...)	Field Data pH S.U.	Field Data Temp °C	# OF CONTAINERS	MATRIX CODE (See Lower Left)	PRESERVATIVE CODE (See Lower Left)
	2-16-09	0820	004	AT						

1. Expedited services not available for all services, please call. 2. Samples received unannounced with less than 48 hours holding time remaining may be subject to additional surcharges. 3. Lab reserves the right to return unused portions of samples to client.

Relinquished by: (Signature)	Received By: (Signature)	DATE	TIME (24 hr)
[illegible]	[illegible]	2-16-09	0950
Relinquished by: (Signature)	Received by: (Signature)	DATE	TIME (24 hr)
Relinquished by: (Signature)	Received for MMLI by:	DATE	TIME (24 hr)

CONDITIONS UPON RECEIPT (CHECK ONE)
☒ Iced wet/Blue ____ °C Temp
☐ Ambient ____ °C Temp ☐ N/A

	YES	NO	N/A
Custody seals present/intact?	☐	☐	☐
Broken containers?	☐	☐	☐
COC agree with sample Labels?	☐	☐	☐
Correct containers for testing?	☐	☐	☐
Headspace issues acceptable?	☐	☐	☐
Holding time(s) acceptable?	☐	☐	☐
Preservative pH's acceptable?	☐	☐	☐
Was pH left unadjusted?	☐	☐	☐
All samples listed on COC received?	☐	☐	☐
Samples properly preserved?	☐	☐	☐
Client's sample documents received?	☐	☐	☐
COC been relinquished?	☐	☐	☐
Are tests listed for each sample?	☐	☐	☐

Method of Shipment (check one): UPS ☐ FedEx ☐ MMLI ☐ US Postal ☐ Client ☐
Date Shipped
Airbill #
Logged in by ____ Location:
LAB NOTES
Follow up action required YES ☐ NO ☐
Client information
Client Rep.
By
Reviewed by
Date

MATRIX CODES:
DW – Drinking Water
SW – Solid Waste
SO – Soil/Solid
SL – Sludge
GW – Ground Water
WW – Waste Water
OL – Oil
SU – Surface Water

PRESERVATIVE CODES:
NI – Nitric acid (HNO_3)
HA – Hydrochloric Acid (HCl)
SH – Sodium Hydroxide (NaOH)
ST – Sodium Thiosulfate
ZN – Zinc acetate
SA – Sulfuric Acid (H_2SO_4)
4C – 4°C
AA – Ascorbic Acid
NO – No preservative
SS – Sodium sulfite

McCoy & McCoy Laboratories, Inc.
P. O. Box 907
Madisonville, KY 42431
www.mccoylabs.com

Chain of Custody

Lexington KY 859-299-7775
Paducah KY 270-444-6547
Louisvill 502-961
Madisonville KY 270-821-7375
Pikeville KY 606-432-3104

Route: 54 Project SDWA

Collected by: BJG

Collection Date: 2-18-

Collection Time: 0630

Center Ridge Water Dist #2
Attn: William Duncan
69 Marguerite Blvd
Newconcord KY 42076

P. O. No:

PhoneFax: 270-436-630

CE648514 Center Ridge WD #2 RAD 0180509

Logbatch

Composite Sample Start Date Time

Sample Nos

Stop Date Time

Field Data By: Date Time Fecal Date Tim

pH Meter#: pH: DO Meter#: DO:

Temp: Cl: Flow: Units: Matrix:

Collection Method	Test	Analysis Requested	Bottle Type and Preservative
G / C	RAD228_1	Radium 228	1 Liter Plastic Nitric Acid 4 c
G / C	ALPHA_1	Gross Alpha - SDWA	1 Liter Plastic Nitric Acid 4 c
G / C	SHIP13_1	UPS Shipping Charge	
G / C	RAD228_SHIP_1	Radium 228 Date sent to sub	
G / C	ALPHA_SHIP_1	Gross Alpha - SDWA Date shipped to	

Relinquished by: William Duncan Date/Time: 2-18-09 0900

Received by: Date/Time: 2/18/09/1055

Relinquished by: Date/Time:

Received by: Date/Time:

Relinquished by: Date/Time:

Received by: Date/Time:

SAMPLE CATEGORY = TC

KENTUCKY DIVISION OF WATER / DRINKING WATER BRANCH
BACTERIOLOGICAL ANALYSIS REPORT FORM

General Information – This Section To Be Completed By Collector

PWS ID: KY0180509

PWS Name: CRWD # 3

PWS Contact: Bill

PWS Address: 69 Marguerite New Concord Ky 42076

PWS Phone: 270-436-6304

Compliance Period (MMYYYY): 022009

Collection Date (MMDDYYYY): 02/18/2009
(All Samples Reported on this Form were Collected on this Date.)

Collector Name: William Duncan 2-18-09
Signature/Date

General Information – This Section To Be Completed By Lab

Lab ID: 00001

Lab Receipt Date (MMDDYYYY): 02/18/2009

Analysis Date (MMDDYYYY): 02/18/2009

Total Coliform Analysis Method Code: 028

E Coli Analysis Method Code:

Lab Analyst: Mindy Martin 2/19/09
Signature/Date

Lab Supervisor: [signature] 2/19/09
Signature/Date

Sample Information – This Section To Be Completed By Collector

Sample Type (RT, RP, or SP) (See Key)	Special Sample Reason (A, B, C, D, or E) (See Key)	Replacement Sample? (Y or Blank)	Location Code (See Instructions)	Repeat Location Code (DN, UP, or OR) (See Key)	Sample Time (24 hr)	Free Chlorine (Required for all disinfectants except Chloramine)	Total Chlorine (Required when disinfectant is Chloramine)
RT			004		0600	1.44	1.51

Analysis Information – This Section To Be Completed By Lab

Lab Sample Number	Analysis Time (24 hr)	Result (Total Coliform Count - or - TNTC - or - CNFG) (See Key)	Total Coliform (P/A)	E Coli (P/A)	Lab Sample Number of Original Sample (Required for Repeat and/or Replacement Samples) (See Instructions)
A552501	1315		A		

The signatories of this form certify by their signatures that collection and analysis of the water sample analyzed and the resulting data hereby submitted, were completed in accordance with the provisions of 401 KAR Chapter 8, specifically including but not limited to 401 KAR 8:200, Section 1 and 401 KAR 8:040; and that the data submitted on this form is a true and accurate report of the results of collection and analysis performed pursuant to the above-referenced regulations. Violations of 401 KAR Chapter 8 are subject to severe penalties prescribed in KRS 224.99-010, up to $25,000 fine per day per violation and in some cases a violation may subject the violator to prison.

BACTERIOLOGICAL ANALYSIS REPORT FROM KEY

Sample Type:	RT = Routine (For Compliance)	RP = Repeat (For Compliance)	SP = Special (Not for Compliance)
Special Sample Reason: (Only If Sample Type = SP)	A = Suspected Contamination B = New Plant, Modification, or Line Extension	C = Treatment Modification D = Study/Investigation	E = Line Break, Emergency Repair
Repeat Location Code: (Only If Sample Type = RP)	DN = Downstream	UP = Upstream	OR = Original Site

McCoy & McCoy Laboratories, Inc.
www.mccoylabs.com

PO Box 907 * 825 Industrial Rd.
Madisonville, KY 42431
270.821.7375
270.825.9200 fax

2456 Fortune Dr., Suite 160
Lexington, KY 40509
859.299.7775
859.299.7785 fax

173 Island Creek Rd.
Pikeville, KY 41501
606.432.3104
606.432.3171 fax

1800 Kentucky Ave.
Paducah, KY 42003
270.444.6547
270.444.6572 fax

5510 Fern Valley Rd.
Suite 104 Promenade Pavilion
Louisville, KY 40228
502.961.0001

SHADED AREA FOR LAB USE ONLY

CHAIN OF CUSTODY and ANALYTICAL REQUEST

Please print legibly.

Client:	Bill To:	Send Results to:	Compliance Monitoring (check one)? Yes ☐ No ☐ / Samples Chlorinated (check one)? Yes ☐ No ☐	PO#
CRWD # 3				
Phone/Email:	Phone/Email	Phone/Email:	PWS ID# / STATE	
Batch#:	Project Name	Collected by (Signature): R.W.	MMLI Quote # (if applicable)	

Sample ID#	COLLECTION DATE	COLLECTION TIME (24 hr)	SAMPLE DESCRIPTION Composite samples indicate begin time, end time and temp (°C) at end time	SAMPLE ANALYSIS REQUESTED Method ID if known (i.e. 8260B, 6010B/7470A...)	SAMPLE REMARKS (i.e. composite, grab, field readings, corrosive...)	Field Data pH S.U.	Field Data Temp °C	# OF CONTAINERS	MATRIX CODE (See Lower Left)	PRESERVATIVE CODE (See Lower Left)
	2-15-09	0600	004	PLT						

1. Expedited services not available for all services, please call. 2. Samples received unannounced with less than 48 hours holding time remaining may be subject to additional surcharges. 3. Lab reserves the right to return unused portions of samples to client.

Relinquished by: (Signature)	Received By: (Signature)	DATE	TIME (24 hr)
[illegible]	[illegible]	2-15-09	0600
Relinquished by: (Signature)	Received by: (Signature)	DATE	TIME (24 hr)
Relinquished by: (Signature)	Received for MMLI by:	DATE	TIME (24 hr)

MATRIX CODES:
DW – Drinking Water
SW – Solid Waste
SO – Soil/Solid
SL – Sludge
GW – Ground Water
WW – Waste Water
OL – Oil
SU – Surface Water

PRESERVATIVE CODES:
NI – Nitric acid (HNO_3)
HA – Hydrochloric Acid (HCl)
SH – Sodium Hydroxide (NaOH)
ST – Sodium Thiosulfate
ZN – Zinc acetate
SA – Sulfuric Acid (H_2SO_4)
4C – 4°C
AA – Ascorbic Acid
NO – No preservative
SS – Sodium sulfite

CONDITIONS UPON RECEIPT (CHECK ONE)
☐ Iced wet/Blue ____ °C Temp
☐ Ambient ____ °C Temp ☐ N/A

	YES	NO	N/A
Custody seals present/intact?	☐	☐	☐
Broken containers?	☐	☐	☐
COC agree with sample Labels?	☐	☐	☐
Correct containers for testing?	☐	☐	☐
Headspace issues acceptable?	☐	☐	☐
Holding time(s) acceptable?	☐	☐	☐
Preservative pH's acceptable?	☐	☐	☐
Was pH left unadjusted?	☐	☐	☐
All samples listed on COC received?	☐	☐	☐
Samples properly preserved?	☐	☐	☐
Client's sample documents received?	☐	☐	☐
COC been relinquished?	☐	☐	☐
Are tests listed for each sample?	☐	☐	☐

Method of Shipment (check one): UPS ☐ FedEx ☐ MMLI ☐ US Postal ☐ Client ☐
Date Shipped:
Airbill#:
Logged in by: ____ Location: ____
LAB NOTES: ____
Follow up action required: YES ☐ NO ☐
Client informed on: ____ / ____ / ____
Client Rep: ____
By: ____
Reviewed by: ____
Date: ____ / ____ / ____

McCoy & McCoy Laboratories, Inc.
P. O. Box 907
Madisonville, KY 42431
www.mccoylabs.com

Lexington KY 859-299-7775
Madisonville KY 270-821-7375
Paducah KY 270-444-6547
Pikeville KY 606-432-3104
M.DeMoss@mccoylabs.com

Center Ridge Water Dist #3
Attn: William Duncan
69 Marguerite Blvd
Newconcord KY 42076

Batch #: 09021905
Received: 02/18/2009
Reported: 03/12/2009
Client: CE6486
Page: 1 of 1

Analysis Report

AG52186 TPA Plant Tap Collected: 2/18/2009

Test Description	Analyzed	By	Method	Result	Units	Report Limit	Note
Gross Alpha - SDWA	03/02/2009	KNL	EPA 900.0**	0.5 ± 0.7	pCi/l		
Radium 228	03/07/2009	KNL	EPA 903.0**	0.3 ± 0.7	pCi/l		

Submitted By: Mark DeMoss

Mark DeMoss, SDW Coordinator

The analyses reported above have been determined by protocols that meet or exceed the requirements of NELAC. Methods listed with an "*" are not part of this accreditation. Call Mark DeMoss at 270-821-7375 for any questions concerning this analysis report.

FL DOH Certification #E84025
Kentucky Lab ID #90033

KNL LABORATORY SERVICES
2742 N. Florida Ave.
P.O. Box 1833
Tampa, Florida 33601
(813) 229-2879
Fax (813) 229-0002

Report Date: March 9, 2009

McCoy & McCoy Laboratories, Inc.
P.O. Box 907
Madisonville, KY 42431

Attn: Doug Wolfe

Field Custody: Client
Client/Field ID: AG52186

Sample Collection: 2-18-09

Lab ID No: 09.1528
Lab Custody Date: 2-23-09
Sample description: DW

CERTIFICATE OF ANALYSIS

Parameter	Units	Results			Analysis Date	Method	Detection Limit
Gross Alpha	pCi/l	0.5	±	0.7	03-02-09/0800	EPA 900.0	1.2
Radium-228	pCi/l	0.3	±	0.7	03-07-09/1230	EPA Ra-05	1.0

Alpha Standard: Th-230

James W. Hayes
Laboratory Manager

Test results meet all requirements of the NELAC and EPA drinking water standard operating and analytical method procedures. Contact person: Jim Hayes (813) 229-2879

SAMPLE CATEGORY = RA
ENTRY POINT SAMPLING

KENTUCKY DIVISION OF WATER / DRINKING WATER BRANCH
RADIONUCLIDES ANALYSIS REPORT FORM

Rev. 01/15/2006

This Section To Be Completed By Collector

PWS ID: KY 0180502 | Plant ID: A | Plant Name: CENTER RIDGE #3 WTP | Location Code: TPA

PWS Name: CENTER RIDGE WATER DISTRICT #3 | PWS Contact: WILLIAM M. DUNCAN

PWS Address: 281 MORRIS RD., DEXTER, KY 42036 | PWS Phone: 270-474-8267

Sample Date (MMDDYYYY): 03182009 | Time: 0610 | Sample Type: RT (RT = Routine (For Compliance); SP = Special (Not for Compliance)) | Collector Name: WILLIAM DUNCAN (Signature/Date)

This Section To Be Completed By Lab

Lab ID: 90033 | Lab Sample Number: 091528 | Lab Phone: (813) 229-2879

Lab Analyst: [signature] 3-7-09 (Signature/Date) | Lab Supervisor: James W Hayes 3-9-09 (Signature/Date)

Analyte Code	Analyte Name	Analysis Method Code	<	Result (pCi/L) -or- Lab Minimum Reporting Limit (pCi/L)	Analysis Date (MMDDYYYY)	Counting Error (+/-)
4000	GROSS ALPHA	756		0.5	03022009	0.7
4006	URANIUM			.		.
4010	COMBINED RADIUM			.		.
4020	RADIUM-226			.		.
4030	RADIUM-228	942		0.3	03072009	0.7
4044	POTASSIUM-40, TOTAL			.		.
4100	GROSS BETA			.		.
4101	MAN-MADE BETA PARTICLE AND PHOTON EMITTERS			.		.
4102	TRITIUM			.		.
4174	STRONTIUM-90			.		.
4264	IODINE-131			.		.
4270	CESIUM-134			.		.

The signatories of this form certify by their signatures that collection and analysis of the water sample analyzed and the resulting data hereby submitted, were completed in accordance with the provisions of 401 KAR Chapter 8; and that the data submitted on this form is a true and accurate report of the results of collection and analysis performed pursuant to the above-referenced regulations. Violations of 401 KAR Chapter 8 are subject to severe penalties prescribed in KRS 224.99-010, up to $25,000 fine per day per violation and in some cases a violation may subject the violator to prison.

McCoy & McCoy Laboratories, Inc.
www.mccoylabs.com

PO Box 907 * 825 Industrial Rd.
Madisonville, KY 42431
270.821.7375
270.825.9200 fax

2456 Fortune Dr., Suite 160
Lexington, KY 40509
859.299.7775
859.299.7785 fax

173 Island Creek Rd.
Pikeville, KY 41501
606.432.3104
606.432.3171 fax

1800 Kentucky Ave.
Paducah, KY 42003
270.444.6547
270.444.6572 fax

5510 Fern Valley Rd.
Suite 104 Promenade Pavilion
Louisville, KY 40228
502.961.0001

SHADED AREA FOR LAB USE ONLY

CHAIN OF CUSTODY and ANALYTICAL REQUEST

Please print legibly.

Client:	Bill To:	Send Results to: Syd Tate	Compliance Monitoring (check one)? Yes ☐ No ☐ Samples Chlorinated (check one)? Yes ☐ No ☐	PO# L0090603
Phone/Email:	Phone/Email	Phone/Email:	PWS ID# / STATE KY	
Batch#	Project Name	Collected by (Signature): CU	MMLI Quote # (if applicable)	

Sample ID#	COLLECTION DATE	COLLECTION TIME (24 hr)	SAMPLE DESCRIPTION Composite samples indicate begin time, end time and temp (°C) at end time	SAMPLE ANALYSIS REQUESTED Method ID if known (i.e. 8260B, 6010B/7470A...)	SAMPLE REMARKS (i.e. composite, grab, field readings, corrosive...)	Field Data pH S.U.	Field Data Temp °C	# OF CONTAINERS	MATRIX CODE (See Lower Left)	PRESERVATIVE CODE (See Lower Left)
	2/18/09	0610	AG 521860	RAD 228, Gross Alpha	Grab			2		
			09-1528							
			*please report	ON KY state Form						

1. Expedited services not available for all services, please call. 2. Samples received unannounced with less than 48 hours holding time remaining may be subject to additional surcharges. 3. Lab reserves the right to return unused portions of samples to client.

Relinquished by: (Signature)	Received By: (Signature)	DATE	TIME (24 hr)
Mindy Martin		2/19/09	1600
Relinquished by: (Signature)	Received by: (Signature) Ramandy KNL	2-23-09	1310
Relinquished by: (Signature)	Received for MMLI by:	DATE	TIME (24 hr)

CONDITIONS UPON RECEIPT (CHECK ONE)
☐ Iced wet/Blue °C Temp
☐ Ambient °C Temp ☐ N/A

	YES	NO	N/A
Custody seals present/intact?	☐	☐	☐
Broken containers?	☐	☐	☐
COC agree with sample Labels?	☐	☐	☐
Correct containers for testing?	☐	☐	☐
Headspace issues acceptable?	☐	☐	☐
Holding time(s) acceptable?	☐	☐	☐
Preservative pH's acceptable?	☐	☐	☐
Was pH left unadjusted?	☐	☐	☐
All samples listed on COC received?	☐	☐	☐
Samples properly preserved?	☐	☐	☐
Client's sample documents received?	☐	☐	☐
COC been relinquished?	☐	☐	☐
Are tests listed for each sample?	☐	☐	☐

Method of Shipment (check one): UPS ☐ FedEx ☐ MMLI ☐ US Postal ☐ Client ☐
Date Shipped:
Airbill#:
Logged in by: Location:
LAB NOTES:
Follow up action required: YES ☐ NO ☐
Client informed on:
Client Rep:
By:
Reviewed by:
Date:

MATRIX CODES:
DW – Drinking Water
GW – Ground Water
SW – Solid Waste
WW – Waste Water
SO – Soil/Solid
OL – Oil
SL – Sludge
SU – Surface Water

PRESERVATIVE CODES:
NI – Nitric acid (HNO_3)
HA – Hydrochloric Acid (HCl)
SH – Sodium Hydroxide (NaOH)
ST – Sodium Thiosulfate
ZN – Zinc acetate
SA – Sulfuric Acid (H_2SO_4)
4C – 4°C
AA – Ascorbic Acid
NO – No preservative
SS – Sodium sulfite

McCoy & McCoy Laboratories, Inc.
P. O. Box 907
Madisonville, KY 42431
www.mccoylabs.com

Chain of Custody

Lexington KY 859-299-7775
Paducah KY 270-444-6547
Louisville KY 502-961-0001
Madisonville KY 270-821-7375
Pikeville KY 606-432-3104

Route: 54 Project SDWA

Center Ridge Water Dist #3
Attn: William Duncan
69 Marguerite Blvd
Newconcord KY 42076

Collected by: Bill

P. O. No:

Collection Date: 2-18-09

Collection Time: 0610

PhoneFax: 270-436-6304

CE648613 Center Ridge WD #3 RAD 0180502

Logbatch 09021905

Sample Nos AG52186

Composite Sample Start Date _____ Time _____

Stop Date _____ Time _____

Field Data By: _____ Date _____ Time _____ Fecal Date _____ Time _____

pH Meter#: _____ pH: _____ DO Meter#: _____ DO: _____

Temp: _____ Cl: _____ Flow: _____ Units: _____ Matrix: Liquid

Collection Method	Test	Analysis Requested	Bottle Type and Preservative
G / C	RAD228_1	Radium 228	1 Liter Plastic Nitric Acid 4 c
G / C	ALPHA_1	Gross Alpha - SDWA	1 Liter Plastic Nitric Acid 4 c
G / C	SHIP13_1	UPS Shipping Charge	
G / C	RAD228_SHIP_1	Radium 228 Date sent to sub	
G / C	ALPHA_SHIP_1	Gross Alpha - SDWA Date shipped to	

Relinquished by: William Duncan Date/Time: 2-18-09 0900

Received by: Derek P Lant Date/Time: 2/18/09/1005

Relinquished by: Derek P Lant Date/Time: 2/18/09/1250

Received by: Mindy Martin Date/Time: 2/18/09 1250

Relinquished by: _____ Date/Time: _____

Received by: _____ Date/Time: _____

McCoy & McCoy Laboratories, Inc.
P.O. Box 907
Madisonville, KY 42431
270-821-7375

SAMPLE ACCEPTANCE/CONDITION CHECKLIST

Client: Center Ridge #3 Logbatch No.: 09021905 Lab No.: AGS2186

Sample Delivery Type (circle): US Postal UPS FedEx (MMLI) Client _____

Sample Receipt Checklist:

	YES	NO
a. Were custody seals used on outer package, and/or sample containers?		✓
b. Were sample containers received damaged?		✓
c. Cooler Temp. 7°C (circle) (Acceptable) Unacceptable		
d. Were the samples accompanied with a Chain-of-Custody or other transferable document?	✓	
e. Was all information recorded to defend the sample transfer & submittal?	✓	
f. Is each sample and container uniquely identified on the COC?	✓	
g. Were all samples in appropriate containers?	✓	
h. Did all samples have appropriate volumes?	✓	
i. Were all samples submitted within sample holding times?	✓	
j. Were "Collection Methods" recorded?		✓
k. Were "Flow Units" recorded?		✓

Logged In By: MLM Date: 2/18/09

Exceptions:

Action Required:

_____Client Informed on ____/____/____ Client Rep:_____By:_____

_____No Action Required, see notes

_____No Action Required

Reviewed By: BKH Project Manager Date: 2/20/09

Q:\MADISONVILLE\ADMIN\Forms & Labels\Sample Checklist.doc

McCoy & McCoy Laboratories, Inc.
P. O. Box 907
Madisonville, KY 42431
www.mccoylabs.com

Chain of Custody

Lexington KY 859-299-7775
Madisonville KY 270-821-7375
Paducah KY 270-444-6547
Pikeville KY 606-432-3104
Louisville 502-961-(

Route: 54 Project SDWA

Center Ridge Water Dist #3
Attn: William Duncan
69 Marguerite Blvd
Newconcord KY 42076

Collected by: P. W

P. O. No:

Collection Date: 2-12-0

Collection Time: 0610

PhoneFax: 270-436-6304

CE648613 Center Ridge WD #3 RAD 0180502

Logbatch

Sample Nos

Composite Sample Start Date Time

Stop Date Time

Field Data By: Date Time Fecal Date Time

pH Meter#: pH: DO Meter#: DO:

Temp: Cl: Flow: Units: Matrix: L

Collection Method	Test	Analysis Requested	Bottle Type and Preservative
G / C	RAD228_1	Radium 228	1 Liter Plastic Nitric Acid 4 c
G / C	ALPHA_1	Gross Alpha - SDWA	1 Liter Plastic Nitric Acid 4 c
G / C	SHIP13_1	UPS Shipping Charge	
G / C	RAD228_SHIP_1	Radium 228 Date sent to sub	
G / C	ALPHA_SHIP_1	Gross Alpha - SDWA Date shipped to	

Relinquished by: Date/Time: 2-12-0 0900

Received by: Date/Time: 2/12/

Relinquished by: Date/Time:

Received by: Date/Time:

Relinquished by: Date/Time:

Received by: Date/Time:

SAMPLE CATEGORY = TC

KENTUCKY DIVISION OF WATER / DRINKING WATER BRANCH
BACTERIOLOGICAL ANALYSIS REPORT FORM

General Information – This Section To Be Completed By Collector

PWS ID: KY0183106

PWS Name: CRWD # 4

PWS Contact: Bill

PWS Address: 69 Marguerite, New Concord Ky 42076

PWS Phone: 270-436-6304

Compliance Period (MMYYYY): 022009

Collection Date (MMDDYYYY): 02182009
(All Samples Reported on this Form were Collected on this Date.)

Collector Name: William Duncan 2-18-09
Signature/Date

General Information – This Section To Be Completed By Lab

Lab ID: 00307

Lab Receipt Date (MMDDYYYY): 02182009

Analysis Date (MMDDYYYY): 02182009

Total Coliform Analysis Method Code: 920

E Coli Analysis Method Code:

Lab Analyst: Mindy Martin 2/19/09
Signature/Date

Lab Supervisor: [illegible] 2/18/09
Signature/Date

Sample Information – This Section To Be Completed By Collector

Sample Type (RT, RP, or SP) (See Key)	Special Sample Reason (A, B, C, D, or E) (See Key)	Replacement Sample? (Y or Blank)	Location Code (See Instructions)	Repeat Location Code (DN, UP, or OR) (See Key)	Sample Time (24 hr)	Free Chlorine (Required for all disinfectants except Chloramine)	Total Chlorine (Required when disinfectant is Chloramine)
RT			014		0800	1.19	1.26

Analysis Information – This Section To Be Completed By Lab

Lab Sample Number	Analysis Time (24 hr)	Result (Total Coliform Count - or - TNTC - or - CNFG) (See Key)	Total Coliform (P/A)	E Coli (P/A)	Lab Sample Number of Original Sample (Required for Repeat and/or Replacement Samples) (See Instructions)
A5325602	1315		A		

The signatories of this form certify by their signatures that collection and analysis of the water sample analyzed and the resulting data hereby submitted, were completed in accordance with the provisions of 401 KAR Chapter 8, specifically including but not limited to 401 KAR 8:200, Section 1 and 401 KAR 8:040; and that the data submitted on this form is a true and accurate report of the results of collection and analysis performed pursuant to the above-referenced regulations. Violations of 401 KAR Chapter 8 are subject to severe penalties prescribed in KRS 224.99-010, up to $25,000 fine per day per violation and in some cases a violation may subject the violator to prison.

BACTERIOLOGICAL ANALYSIS REPORT FROM KEY

Sample Type:	RT = Routine (For Compliance)	RP = Repeat (For Compliance)	SP = Special (Not for Compliance)
Special Sample Reason: (Only If Sample Type = SP)	A = Suspected Contamination B = New Plant, Modification, or Line Extension	C = Treatment Modification D = Study/Investigation	E = Line Break, Emergency Repair
Repeat Location Code:	DN = Downstream	UP = Upstream	OR = Original Site

McCoy & McCoy Laboratories, Inc.
www.mccoylabs.com

PO Box 907 * 825 Industrial Rd.
Madisonville, KY 42431
270.821.7375
270.825.9200 fax

2456 Fortune Dr., Suite 160
Lexington, KY 40509
859.299.7775
859.299.7785 fax

173 Island Creek Rd.
Pikeville, KY 41501
606.432.3104
606.432.3171 fax

1800 Kentucky Ave.
Paducah, KY 42003
270.444.6547
270.444.6572 fax

5510 Fern Valley Rd.
Suite 104 Promenade Pavilion
Louisville, KY 40228
502.961.0001

Please print legibly

CHAIN OF CUSTODY and ANALYTICAL REQUEST

SHADED AREA FOR LAB USE ONLY

Client: CRWD #4

Phone/Email:

Bill To:

Phone/Email

Send Results to:

Phone/Email:

Compliance Monitoring (check one)? Yes ☐ No ☐

Samples Chlorinated (check one)? Yes ☐ No ☐

PO#

PWS ID#

STATE

MMLI Quote # (if applicable)

Batch#

Project Name

Collected by (Signature): PJC

Sample ID#	COLLECTION DATE	COLLECTION TIME (24 hr)	SAMPLE DESCRIPTION Composite samples indicate begin time, end time and temp (°C) at end time	SAMPLE ANALYSIS REQUESTED Method ID if known (i.e. 8260B, 6010B/7470A...)	SAMPLE REMARKS (i.e. composite, grab, field readings, corrosive...)	Field Data pH S.U.	Field Data Temp °C	# OF CONTAINERS	MATRIX CODE (See Lower Left)	PRESERVATIVE CODE (See Lower Left)
	2-18-09	0800	014	RT						

1. Expedited services not available for all services, please call. 2. Samples received unannounced with less than 48 hours holding time remaining may be subject to additional surcharges. 3. Lab reserves the right to return unused portions of samples to client.

Relinquished by: (Signature)	Received By: (Signature)	DATE	TIME (24 hr)
[signature]	[signature]	2-18-09	0700
Relinquished by: (Signature)	Received by: (Signature)	DATE	TIME (24 hr)
Relinquished by: (Signature)	Received for MMLI by:	DATE	TIME (24 hr)

MATRIX CODES:
DW – Drinking Water
SW – Solid Waste
SO – Soil/Solid
SL – Sludge
GW – Ground Water
WW – Waste Water
OL – Oil
SU – Surface Water

PRESERVATIVE CODES:
NI – Nitric acid (HNO_3)
HA – Hydrochloric Acid (HCl)
SH – Sodium Hydroxide (NaOH)
ST – Sodium Thiosulfate
ZN – Zinc acetate
SA – Sulfuric Acid (H_2SO_4)
4C – 4°C
AA – Ascorbic Acid
NO – No preservative
SS – Sodium sulfite

CONDITIONS UPON RECEIPT (CHECK ONE)
☐ Iced wet/Blue °C Temp
☐ Ambient °C Temp
☐ N/A

	YES	NO	N/A
Custody seals present/intact?	☐	☐	☐
Broken containers?	☐	☐	☐
COC agree with sample Labels?	☐	☐	☐
Correct containers for testing?	☐	☐	☐
Headspace issues acceptable?	☐	☐	☐
Holding time(s) acceptable?	☐	☐	☐
Preservative pH is acceptable?	☐	☐	☐
Was pH left unadjusted?	☐	☐	☐
All samples listed on COC received?	☐	☐	☐
Samples properly preserved?	☐	☐	☐
Client's sample documents received?	☐	☐	☐
COC been relinquished?	☐	☐	☐
Are tests listed for each sample?	☐	☐	☐

Method of Shipment (Check one): UPS ☐ FedEx ☐ MMLI ☐ US Postal ☐ Client ☐

Date Shipped:
Airbill #:
Logged in by: Location:
LAB NOTES:
Follow up action required? YES ☐ NO ☐
Client Intervention:
Client Rep.:
By:
Reviewed by:
Date:

SAMPLE CATEGORY = TC

KENTUCKY DIVISION OF WATER / DRINKING WATER BRANCH
BACTERIOLOGICAL ANALYSIS REPORT FORM

General Information – This Section To Be Completed By Collector

PWS ID: KY0180547

Compliance Period (MMYYYY): 022009

PWS Name: CRWD #1

PWS Contact: Bill

Collection Date (MMDDYYYY): 02252009
(All Samples Reported on this Form were Collected on this Date.)

PWS Address: 69 Marguerite Rd Concord Ky 42076

PWS Phone: 270-436-6304

Collector Name: William Duncan 2-25-09
Signature/Date

General Information – This Section To Be Completed By Lab

Lab ID: 0000

Lab Receipt Date (MMDDYYYY): 02252009

Analysis Date (MMDDYYYY): 02252009

Total Coliform Analysis Method Code: 020

E Coli Analysis Method Code:

Lab Analyst: Mindy Martin 2/26/09
Signature/Date

Lab Supervisor: 2/26/09
Signature/Date

Sample Information – This Section To Be Completed By Collector

Analysis Information – This Section To Be Completed By Lab

Sample Type (RT, RP, or SP) (See Key)	Special Sample Reason (A, B, C, D, or E) (See Key)	Replacement Sample? (Y or Blank)	Location Code (See Instructions)	Repeat Location Code (DN, UP, or OR) (See Key)	Sample Time (24 hr)	Free Chlorine (Required for all disinfectants except Chloramine)	Total Chlorine (Required when disinfectant is Chloramine)	Lab Sample Number	Analysis Time (24 hr)	Result (Total Coliform Count - or - TNTC - or - CNFG) (See Key)	Total Coliform (P/A)	E Coli (P/A)	Lab Sample Number of Original Sample (Required for Repeat and/or Replacement Samples) (See Instructions)
RT			035		0730	1.23	1.25	A654120	1230		A		

The signatories of this form certify by their signatures that collection and analysis of the water sample analyzed and the resulting data hereby submitted, were completed in accordance with the provisions of 401 KAR Chapter 8, specifically including but not limited to 401 KAR 8:200, Section 1 and 401 KAR 8:040; and that the data submitted on this form is a true and accurate report of the results of collection and analysis performed pursuant to the above-referenced regulations. Violations of 401 KAR Chapter 8 are subject to severe penalties prescribed in KRS 224.99-010, up to $25,000 fine per day per violation and in some cases a violation may subject the violator to prison.

BACTERIOLOGICAL ANALYSIS REPORT FROM KEY

Sample Type:	RT = Routine (For Compliance)	RP = Repeat (For Compliance)	SP = Special (Not for Compliance)
Special Sample Reason: (Only If Sample Type = SP)	A = Suspected Contamination B = New Plant, Modification, or Line Extension	C = Treatment Modification D = Study/Investigation	E = Line Break, Emergency Repair
Repeat Location Code: (Only If Sample Type = RP)	DN = Downstream	UP = Upstream	OR = Original Site

McCoy & McCoy Laboratories, Inc.
www.mccoylabs.com

PO Box 907 * 825 Industrial Rd.
Madisonville, KY 42431
270.821.7375
270.825.9200 fax

2456 Fortune Dr., Suite 160
Lexington, KY 40509
859.299.7775
859.299.7785 fax

173 Island Creek Rd.
Pikeville, KY 41501
606.432.3104
606.432.3171 fax

1800 Kentucky Ave.
Paducah, KY 42003
270.444.6547
270.444.6572 fax

5510 Fern Valley Rd.
Suite 104 Promenade Pavilion
Louisville, KY 40228
502.961.0001

CHAIN OF CUSTODY and ANALYTICAL REQUEST

Please print legibly

SHADED AREA FOR LAB USE ONLY

Client:	Bill To:	Send Results to:	Compliance Monitoring (check one)? Yes ☐ No ☐ Samples Chlorinated (check one)? Yes ☐ No ☐	PO#
CKWDH 1			PWS ID# / STATE	
Phone/Email:	Phone/Email	Phone/Email:	MMLI Quote # (if applicable)	
Batch#	Project Name	Collected by (Signature): Bill		

Sample ID#	COLLECTION DATE	COLLECTION TIME (24 hr)	SAMPLE DESCRIPTION Composite samples indicate begin time, end time and temp (°C) at end time	SAMPLE ANALYSIS REQUESTED Method ID if known (i.e. 8260B, 6010B/7470A...)	SAMPLE REMARKS (i.e. composite, grab, field readings, corrosive...)	Field Data pH S.U.	Field Data Temp °C	# OF CONTAINERS	MATRIX CODE (See Lower Left)	PRESERVATIVE CODE (See Lower Left)
	1-25-09	0730	005	RT						

1. Expedited services not available for all services, please call. 2. Samples received unannounced with less than 48 hours holding time remaining may be subject to additional surcharges. 3. Lab reserves the right to return unused portions of samples to client.

Relinquished by: (Signature)	Received By: (Signature)	DATE	TIME (24 hr)
William Duncan	David Phillips	1-25-09	0900
Relinquished by: (Signature)	Received by: (Signature)	DATE	TIME (24 hr)
Relinquished by: (Signature)	Received for MMLI by:	DATE	TIME (24 hr)

MATRIX CODES:
DW – Drinking Water
SW – Solid Waste
SO – Soil/Solid
SL – Sludge
GW – Ground Water
WW – Waste Water
OL – Oil
SU – Surface Water

PRESERVATIVE CODES:
NI – Nitric acid (HNO_3)
HA – Hydrochloric Acid (HCl)
SH – Sodium Hydroxide (NaOH)
ST – Sodium Thiosulfate
ZN – Zinc acetate
SA – Sulfuric Acid (H_2SO_4)
4C – 4°C
AA – Ascorbic Acid
NO – No preservative
SS – Sodium sulfite

CONDITIONS UPON RECEIPT (CHECK ONE)
☐ Iced wet/Blue ____ °C Temp
☐ Ambient ____ °C Temp ☐ N/A

	YES	NO	N/A
Custody seals present/intact?	☐	☐	☐
Broken containers?	☐	☐	☐
COC agree with sample Labels?	☐	☐	☐
Correct containers for testing?	☐	☐	☐
Headspace issues acceptable?	☐	☐	☐
Holding time(s) acceptable?	☐	☐	☐
Preservative pH's acceptable?	☐	☐	☐
Was pH left unadjusted?	☐	☐	☐
All samples listed on COC received?	☐	☐	☐
Samples properly preserved?	☐	☐	☐
Client's sample documents received?	☐	☐	☐
COC been relinquished?	☐	☐	☐
Are tests listed for each sample?	☐	☐	☐

Method of Shipment (check one): UPS ☐ FedEx ☐ MMLI ☐ US Postal ☐ client ☐
Date Shipped:
Airbill#:
Logged in by: ____ Location: ____
LAB NOTES:
Follow-up action required: Yes ☐ No ☐
Client informed on:
Client Rep:
By:
Reviewed by:
Date:

SAMPLE CATEGORY = TC

KENTUCKY DIVISION OF WATER / DRINKING WATER BRANCH
BACTERIOLOGICAL ANALYSIS REPORT FORM

General Information – This Section To Be Completed By Collector

PWS ID: KY0180509

Compliance Period (MMYYYY): 022009

PWS Name: CRWD # 2

PWS Contact: Bill

Collection Date (MMDDYYYY): 02252009
(All Samples Reported on this Form were Collected on this Date.)

PWS Address: 69 Marguerite New Concord Ky 42076

PWS Phone: 270-436-6304

Collector Name: William Duncan 2-25-09
Signature/Date

General Information – This Section To Be Completed By Lab

Lab ID: 00021

Lab Receipt Date (MMDDYYYY): 02252009

Total Coliform Analysis Method Code: 320

Analysis Date (MMDDYYYY): 02252009

E Coli Analysis Method Code:

Lab Analyst: Mindy Martin 2/26/09
Signature/Date

Lab Supervisor: 2/26/09
Signature/Date

Sample Information – This Section To Be Completed By Collector / Analysis Information – This Section To Be Completed By Lab

Sample Type (RT, RP, or SP) (See Key)	Special Sample Reason (A, B, C, D, or E) (See Key)	Replacement Sample? (Y or Blank)	Location Code (See Instructions)	Repeat Location Code (DN, UP, or OR) (See Key)	Sample Time (24 hr)	Free Chlorine (Required for all disinfectants except Chloramine)	Total Chlorine (Required when disinfectant is Chloramine)	Lab Sample Number	Analysis Time (24 hr)	Result (Total Coliform Count - or - TNTC - or - CNFG) (See Key)	Total Coliform (P/A)	E Coli (P/A)	Lab Sample Number of Original Sample (Required for Repeat and/or Replacement Samples) (See Instructions)
RT			005		0630	1.39	1.46	A554122	1230		A		

BACTERIOLOGICAL ANALYSIS REPORT FROM KEY

Sample Type:	RT = Routine (For Compliance)	RP = Repeat (For Compliance)	SP = Special (Not for Compliance)
Special Sample Reason: (Only If Sample Type = SP)	A = Suspected Contamination B = New Plant, Modification, or Line Extension	C = Treatment Modification D = Study/Investigation	E = Line Break, Emergency Repair
Repeat Location Code: (Only If Sample Type = RP)	DN = Downstream	UP = Upstream	OR = Original Site

The signatories of this form certify by their signatures that collection and analysis of the water sample analyzed and the resulting data hereby submitted, were completed in accordance with the provisions of 401 KAR Chapter 8, specifically including but not limited to 401 KAR 8:200, Section 1 and 401 KAR 8:040; and that the data submitted on this form is a true and accurate report of the results of collection and analysis performed pursuant to the above-referenced regulations. Violations of 401 KAR Chapter 8 are subject to severe penalties prescribed in KRS 224.99-010, up to $25,000 fine per day per violation and in some cases a violation may subject the violator to prison.

McCoy & McCoy Laboratories, Inc.
www.mccoylabs.com

PO Box 907 * 825 Industrial Rd.
Madisonville, KY 42431
270.821.7375
270.825.9200 fax

2456 Fortune Dr., Suite 160
Lexington, KY 40509
859.299.7775
859.299.7785 fax

173 Island Creek Rd.
Pikeville, KY 41501
606.432.3104
606.432.3171 fax

1800 Kentucky Ave.
Paducah, KY 42003
270.444.6547
270.444.6572 fax

5510 Fern Valley Rd.
Suite 104 Promenade Pavilion
Louisville, KY 40228
502.961.0001

SHADED AREA FOR LAB USE ONLY

CHAIN OF CUSTODY and ANALYTICAL REQUEST

Please print legibly.

Client: CKWD #2	Bill To:	Send Results to:	Compliance Monitoring (check one)? Yes ☐ No ☐ Samples Chlorinated (check one)? Yes ☐ No ☐	PO#
Phone/Email:	Phone/Email	Phone/Email:	PWS ID# / STATE	
Batch#	Project Name	Collected by (Signature): B.D.	MMLI Quote # (if applicable)	

Sample ID#	COLLECTION DATE	TIME (24 hr)	SAMPLE DESCRIPTION Composite samples indicate begin time, end time and temp (°C) at end time	SAMPLE ANALYSIS REQUESTED Method ID if known (i.e. 8260B, 6010B/7470A...)	SAMPLE REMARKS (i.e. composite, grab, field readings, corrosive...)	Field Data pH S.U.	Field Data Temp °C	# OF CONTAINERS	MATRIX CODE (See Lower Left)	PRESERVATIVE CODE (See Lower Left)
	2-25-09	0830	005	RT						

1. Expedited services not available for all services, please call. 2. Samples received unannounced with less than 48 hours holding time remaining may be subject to additional surcharges. 3. Lab reserves the right to return unused portions of samples to client.

Relinquished by: (Signature)	Received By: (Signature)	DATE	TIME (24 hr)
William Duncan	[illegible]	2-25-09	0900
Relinquished by: (Signature)	Received by: (Signature)	DATE	TIME (24 hr)
Relinquished by: (Signature)	Received for MMLI by:	DATE	TIME (24 hr)

CONDITIONS UPON RECEIPT (CHECK ONE)
☐ Iced wet/Blue ____ °C Temp
☐ Ambient ____ °C Temp ☐ N/A

	YES	NO	N/A
Custody seals present/intact?	☐	☐	☐
Broken containers?	☐	☐	☐
COC agree with sample labels?	☐	☐	☐
Correct containers for testing?	☐	☐	☐
Headspace issues acceptable?	☐	☐	☐
Holding time(s) acceptable?	☐	☐	☐
Preservative pH's acceptable?	☐	☐	☐
Was pH left unadjusted?	☐	☐	☐
All samples listed on COC received?	☐	☐	☐
Samples properly preserved?	☐	☐	☐
Client's sample documents received?	☐	☐	☐
COC been relinquished?	☐	☐	☐
Are tests listed for each sample?	☐	☐	☐

Method of Shipment (check one): UPS ☐ FedEx ☐ MMLI ☐ US Postal ☐ Client ☐
Date Shipped:
Airbill #:
Logged In by: Location:
LAB NOTES:
Follow up action required: YES ☐ NO ☐
Client informed on:
Client Rep:
By:
Reviewed by:
Date:

MATRIX CODES:
DW – Drinking Water
SW – Solid Waste
SO – Soil/Solid
SL – Sludge
GW – Ground Water
WW – Waste Water
OL – Oil
SU – Surface Water

PRESERVATIVE CODES:
NI – Nitric acid (HNO_3)
HA – Hydrochloric Acid (HCl)
SH – Sodium Hydroxide (NaOH)
ST – Sodium Thiosulfate
ZN – Zinc acetate
SA – Sulfuric Acid (H_2SO_4)
4C – 4°C
AA – Ascorbic Acid
NO – No preservative
SS – Sodium sulfite

SAMPLE CATEGORY = TC

KENTUCKY DIVISION OF WATER / DRINKING WATER BRANCH
BACTERIOLOGICAL ANALYSIS REPORT FORM

General Information – This Section To Be Completed By Collector

PWS ID: KY0180592

Compliance Period (MM/YYYY): 02/2009

PWS Name: CRWD # 3

PWS Contact: Bill

Collection Date (MMDDYYYY): 02/25/2009
(All Samples Reported on this Form were Collected on this Date.)

PWS Address: 69 Marguerite Ave Concord Ky 42038

PWS Phone: 270-436-6304

Collector Name: William Duncan 2-25-09
Signature/Date

General Information – This Section To Be Completed By Lab

Lab ID: 00031

Lab Receipt Date (MMDDYYYY): 02/25/2009

Total Coliform Analysis Method Code: 82

Analysis Date (MMDDYYYY): 02/25/2009

E Coli Analysis Method Code:

Lab Analyst: Mindy Martin 2/26/09
Signature/Date

Lab Supervisor: 2/26/09
Signature/Date

Sample Information – This Section To Be Completed By Collector / Analysis Information – This Section To Be Completed By Lab

Sample Type (RT, RP, or SP) (See Key)	Special Sample Reason (A, B, C, D, or E) (See Key)	Replacement Sample? (Y or Blank)	Location Code (See Instructions)	Repeat Location Code (DN, UP, or OR) (See Key)	Sample Time (24 hr)	Free Chlorine (Required for all disinfectants except Chloramine)	Total Chlorine (Required when disinfectant is Chloramine)	Lab Sample Number	Analysis Time (24 hr)	Result (Total Coliform Count - or - TNTC - or - CNFG) (See Key)	Total Coliform (P/A)	E Coli (P/A)	Lab Sample Number of Original Sample (Required for Repeat and/or Replacement Samples) (See Instructions)
RT			005		0900	1.31	1.37	A5591128	1230		A		

The signatories of this form certify by their signatures that collection and analysis of the water sample analyzed and the resulting data hereby submitted, were completed in accordance with the provisions of 401 KAR Chapter 8, specifically including but not limited to 401 KAR 8:200, Section 1 and 401 KAR 8:040; and that the data submitted on this form is a true and accurate report of the results of collection and analysis performed pursuant to the above-referenced regulations. Violations of 401 KAR Chapter 8 are subject to severe penalties prescribed in KRS 224.99-010, up to $25,000 fine per day per violation and in some cases a violation may subject the violator to prison.

BACTERIOLOGICAL ANALYSIS REPORT FROM KEY

Sample Type:	RT = Routine (For Compliance)	RP = Repeat (For Compliance)	SP = Special (Not for Compliance)
Special Sample Reason: (Only If Sample Type = SP)	A = Suspected Contamination B = New Plant, Modification, or Line Extension	C = Treatment Modification D = Study/Investigation	E = Line Break, Emergency Repair
Repeat Location Code: (Only If Sample Type = RP)	DN = Downstream	UP = Upstream	OR = Original Site

McCoy & McCoy Laboratories, Inc.
www.mccoylabs.com

PO Box 907 * 825 Industrial Rd.
Madisonville, KY 42431
270.821.7375
270.825.9200 fax

2456 Fortune Dr., Suite 160
Lexington, KY 40509
859.299.7775
859.299.7785 fax

173 Island Creek Rd.
Pikeville, KY 41501
606.432.3104
606.432.3171 fax

1800 Kentucky Ave.
Paducah, KY 42003
270.444.6547
270.444.6572 fax

5510 Fern Valley Rd.
Suite 104 Promenade Pavilion
Louisville, KY 40228
502.961.0001

SHADED AREA FOR LAB USE ONLY

CHAIN OF CUSTODY and ANALYTICAL REQUEST

Please print legibly.

Client:	Bill To:	Send Results to:	Compliance Monitoring (check one)? Yes ☐ No ☐ Samples Chlorinated (check one)? Yes ☐ No ☐	PO#
CRWD #3				
Phone/Email:	Phone/Email	Phone/Email:	PWS ID# / STATE	
Batch#	Project Name	Collected by (Signature): BJJ	MMLI Quote # (if applicable)	

Sample ID#	COLLECTION DATE	TIME (24 hr)	SAMPLE DESCRIPTION Composite samples indicate begin time, end time and temp (°C) at end time	SAMPLE ANALYSIS REQUESTED Method ID if known (i.e. 8260B, 6010B/7470A...)	SAMPLE REMARKS (i.e. composite, grab, field readings, corrosive...)	Field Data pH S.U.	Field Data Temp °C	# OF CONTAINERS	MATRIX CODE (See Lower Left)	PRESERVATIVE CODE (See Lower Left)
	2-25-09	0600	005	KT						

1. Expedited services not available for all services, please call. 2. Samples received unannounced with less than 48 hours holding time remaining may be subject to additional surcharges. 3. Lab reserves the right to return unused portions of samples to client.

Relinquished by: (Signature)	Received By: (Signature)	DATE	TIME (24 hr)
William Duncan	[signature]	2-25-09	0900
Relinquished by: (Signature)	Received by: (Signature)	DATE	TIME (24 hr)
Relinquished by: (Signature)	Received for MMLI by:	DATE	TIME (24 hr)

CONDITIONS UPON RECEIPT (CHECK ONE)
☐ Iced wet/Blue ____ °C Temp
☐ Ambient ____ °C Temp ☐ N/A

	YES	NO	N/A
Custody seals present/intact?	☐	☐	☐
Broken containers?	☐	☐	☐
COC agree with sample Labels?	☐	☐	☐
Correct containers for testing?	☐	☐	☐
Headspace issues acceptable?	☐	☐	☐
Holding time(s) acceptable?	☐	☐	☐
Preservative pH's acceptable?	☐	☐	☐
Was pH left unadjusted?	☐	☐	☐
All samples listed on COC received?	☐	☐	☐
Samples properly preserved?	☐	☐	☐
Client's sample documents received?	☐	☐	☐
COC been relinquished?	☐	☐	☐
Are tests listed for each sample?	☐	☐	☐

Method of Shipment (check one): UPS ☐ FedEx ☐ MMLI ☐ US Postal ☐ Client ☐
Date Shipped:
Airbill#:
Logged In by: Location:
LAB NOTES:
Follow up action required YES ☐ NO ☐
Client informed on:
Client Rep:
By:
Reviewed by:
Date:

MATRIX CODES:
DW – Drinking Water
SW – Solid Waste
SO – Soil/Solid
SL – Sludge
GW – Ground Water
WW – Waste Water
OL – Oil
SU – Surface Water

PRESERVATIVE CODES:
NI – Nitric acid (HNO_3)
HA – Hydrochloric Acid (HCl)
SH – Sodium Hydroxide (NaOH)
ST – Sodium Thiosulfate
ZN – Zinc acetate
SA – Sulfuric Acid (H_2SO_4)
4C – 4°C
AA – Ascorbic Acid
NO – No preservative
SS – Sodium sulfite

SAMPLE CATEGORY = TC

KENTUCKY DIVISION OF WATER / DRINKING WATER BRANCH
BACTERIOLOGICAL ANALYSIS REPORT FORM

General Information -- This Section To Be Completed By Collector

PWS ID: KY0183106

PWS Name: CRWD # 4

PWS Contact: Bill

PWS Address: 69 Marguerite New Concord Ky 42076

PWS Phone: 270-436-6304

Compliance Period (MMYYYY): 022009

Collection Date (MMDDYYYY): 02252009
(All Samples Reported on this Form were Collected on this Date.)

Collector Name: William Duncan 2-25-09
Signature/Date

General Information -- This Section To Be Completed By Lab

Lab ID: 00001

Lab Receipt Date (MMDDYYYY): 02252009

Analysis Date (MMDDYYYY): 02252009

Total Coliform Analysis Method Code: 320

E Coli Analysis Method Code:

Lab Analyst: Mindy Martin 2/26/09
Signature/Date

Lab Supervisor: [signature] 2/26/09
Signature/Date

Sample Information -- This Section To Be Completed By Collector

Sample Type (RT, RP, or SP) (See Key)	Special Sample Reason (A, B, C, D, or E) (See Key)	Replacement Sample? (Y or Blank)	Location Code (See Instructions)	Repeat Location Code (DN, UP, or OR) (See Key)	Sample Time (24 hr)	Free Chlorine (Required for all disinfectants except Chloramine)	Total Chlorine (Required when disinfectant is Chloramine)
RT			090		0800	1.08	1.15

Analysis Information -- This Section To Be Completed By Lab

Lab Sample Number	Analysis Time (24 hr)	Result (Total Coliform Count - or - TNTC - or - CNFG) (See Key)	Total Coliform (P/A)	E Coli (P/A)	Lab Sample Number of Original Sample (Required for Repeat and/or Replacement Samples) (See Instructions)
A354130	1230		A		

The signatories of this form certify by their signatures that collection and analysis of the water sample analyzed and the resulting data hereby submitted, were completed in accordance with the provisions of 401 KAR Chapter 8, specifically including but not limited to 401 KAR 8:200, Section 1 and 401 KAR 8:040; and that the data submitted on this form is a true and accurate report of the results of collection and analysis performed pursuant to the above-referenced regulations. Violations of 401 KAR Chapter 8 are subject to severe penalties prescribed in KRS 224.99-010, up to $25,000 fine per day per violation and in some cases a violation may subject the violator to prison.

BACTERIOLOGICAL ANALYSIS REPORT FROM KEY

Sample Type:	RT = Routine (For Compliance)	RP = Repeat (For Compliance)	SP = Special (Not for Compliance)
Special Sample Reason: (Only if Sample Type = SP)	A = Suspected Contamination B = New Plant, Modification, or Line Extension	C = Treatment Modification D = Study/Investigation	E = Line Break, Emergency Repair
Repeat Location Code:	DN = Downstream	UP = Upstream	OR = Original Site

McCoy & McCoy Laboratories, Inc.
www.mccoylabs.com

PO Box 907 * 825 Industrial Rd.
Madisonville, KY 42431
270.821.7375
270.825.9200 fax

2456 Fortune Dr., Suite 160
Lexington, KY 40509
859.299.7775
859.299.7785 fax

173 Island Creek Rd.
Pikeville, KY 41501
606.432.3104
606.432.3171 fax

1800 Kentucky Ave.
Paducah, KY 42003
270.444.6547
270.444.6572 fax

5510 Fern Valley Rd.
Suite 104 Promenade Pavilion
Louisville, KY 40228
502.961.0001

CHAIN OF CUSTODY and ANALYTICAL REQUEST

Please print legibly

SHADED AREA FOR LAB USE ONLY

Client:	Bill To:	Send Results to:	Compliance Monitoring (check one)? Yes ☐ No ☐	PO#
CRUDE 4			Samples Chlorinated (check one)? Yes ☐ No ☐	
Phone/Email:	Phone/Email	Phone/Email:	PWS ID# / STATE	
Batch#	Project Name	Collected by (Signature): RJV	MMLI Quote # (if applicable)	

Sample ID#	COLLECTION DATE	COLLECTION TIME (24 hr)	SAMPLE DESCRIPTION Composite samples indicate begin time, end time and temp (°C) at end time	SAMPLE ANALYSIS REQUESTED Method ID if known (i.e. 8260B, 6010B/7470A...)	SAMPLE REMARKS (i.e. composite, grab, field readings, corrosive...)	Field Data pH S.U.	Field Data Temp °C	# OF CONTAINERS	MATRIX CODE (See Lower Left)	PRESERVATIVE CODE (See Lower Left)
	2-10-11	0800	020	AT						

1. Expedited services not available for all services, please call. 2. Samples received unannounced with less than 48 hours holding time remaining may be subject to additional surcharges. 3. Lab reserves the right to return unused portions of samples to client.

Relinquished by: (Signature)	Received By: (Signature)	DATE	TIME (24 hr)
[illegible]	[illegible]	2-10-11	0700
Relinquished by: (Signature)	Received by: (Signature)	DATE	TIME (24 hr)
Relinquished by: (Signature)	Received for MMLI by:	DATE	TIME (24 hr)

MATRIX CODES:
DW – Drinking Water
SW – Solid Waste
SO – Soil/Solid
SL – Sludge
GW – Ground Water
WW – Waste Water
OL – Oil
SU – Surface Water

PRESERVATIVE CODES:
NI – Nitric acid (HNO_3)
HA – Hydrochloric Acid (HCl)
SH – Sodium Hydroxide (NaOH)
ST – Sodium Thiosulfate
ZN – Zinc acetate
SA – Sulfuric Acid (H_2SO_4)
4C – 4°C
AA – Ascorbic Acid
NO – No preservative
SS – Sodium sulfite

CONDITIONS UPON RECEIPT (CHECK ONE)
☐ Iced wet/Blue ____ °C Temp
☐ Ambient ____ °C Temp ☐ N/A

	YES	NO	N/A
Custody seals present/intact?	☐	☐	☐
Broken containers?	☐	☐	☐
COC agree with sample Labels?	☐	☐	☐
Correct containers for testing?	☐	☐	☐
Headspace issues acceptable?	☐	☐	☐
Holding time(S) acceptable?	☐	☐	☐
Preservative pH's acceptable?	☐	☐	☐
Was pH left unadjusted?	☐	☐	☐
All samples listed on COC received?	☐	☐	☐
Samples properly preserved?	☐	☐	☐
Client's sample documents received?	☐	☐	☐
COC been relinquished?	☐	☐	☐
Are tests listed for each sample?	☐	☐	☐

Method of Shipment (check one): UPS ☐ FedEx ☐ MMLI ☐ US Postal ☐ Client ☐
Date Shipped:
Airbill #:
Logged in by: ____ Location: ____
LAB NOTES
Follow up action required: YES ☐ NO ☐
Client informed on:
Client Rep
By:
Reviewed by:
Date:

SAMPLE CATEGORY = TC

KENTUCKY DIVISION OF WATER / DRINKING WATER BRANCH
BACTERIOLOGICAL ANALYSIS REPORT FORM

General Information – This Section To Be Completed By Collector

PWSID: KY0180549

PWS Name: CRWD # 1

PWS Contact: Bill

PWS Address: 69 Marguerite New Concord Ky 42076

PWS Phone: 270-436-6304

Compliance Period (MMYYYY): 032009

Collection Date (MMDDYYYY): 03182009
(All Samples Reported on this Form were Collected on this Date.)

Collector Name: William Duncan 3-18-09
Signature/Date

General Information – This Section To Be Completed By Lab

Lab ID: 00031

Lab Receipt Date (MMDDYYYY): 03192009

Analysis Date (MMDDYYYY): 03192009

Total Coliform Analysis Method Code: 028

E Coli Analysis Method Code:

Lab Analyst: Mindy Martin 3/19/09
Signature/Date

Lab Supervisor: [illegible] 3/20/09
Signature/Date

Sample Information – This Section To Be Completed By Collector / Analysis Information – This Section To Be Completed By Lab

Sample Type (RT, RP, or SP) (See Key)	Special Sample Reason (A, B, C, D, or E) (See Key)	Replacement Sample? (Y or Blank)	Location Code (See Instructions)	Repeat Location Code (DN, UP, or OR) (See Key)	Sample Time (24 hr)	Free Chlorine (Required for all disinfectants except Chloramine)	Total Chlorine (Required when disinfectant is Chloramine)	Lab Sample Number	Analysis Time (24 hr)	Result (Total Coliform Count - or - TNTC - or - CNFG) (See Key)	Total Coliform (P/A)	E Coli (P/A)	Lab Sample Number of Original Sample (Required for Repeat and/or Replacement Samples) (See Instructions)
RT			01		0700	1.97	1.43	1658603	1400		A		

The signatories of this form certify by their signatures that collection and analysis of the water sample analyzed and the resulting data hereby submitted, were completed in accordance with the provisions of 401 KAR Chapter 8, specifically including but not limited to 401 KAR 8:200, Section 1 and 401 KAR 8:040; and that the data submitted on this form is a true and accurate report of the results of collection and analysis performed pursuant to the above-referenced regulations. Violations of 401 KAR Chapter 8 are subject to severe penalties prescribed in KRS 224.99-010, up to $25,000 fine per day per violation and in some cases a violation may subject the violator to prison.

BACTERIOLOGICAL ANALYSIS REPORT FROM KEY

Sample Type:	RT = Routine (For Compliance)	RP = Repeat (For Compliance)	SP = Special (Not for Compliance)
Special Sample Reason: (Only If Sample Type = SP)	A = Suspected Contamination B = New Plant, Modification, or Line Extension	C = Treatment Modification D = Study/Investigation	E = Line Break, Emergency Repair
Repeat Location Code:	DN = Downstream	UP = Upstream	OR = Original Site

McCoy & McCoy Laboratories, Inc.
www.mccoylabs.com

PO Box 907 * 825 Industrial Rd.
Madisonville, KY 42431
270.821.7375
270.825.9200 fax

2456 Fortune Dr., Suite 160
Lexington, KY 40509
859.299.7775
859.299.7785 fax

173 Island Creek Rd.
Pikeville, KY 41501
606.432.3104
606.432.3171 fax

1800 Kentucky Ave.
Paducah, KY 42003
270.444.6547
270.444.6572 fax

5510 Fern Valley Rd.
Suite 104 Promenade Pavilion
Louisville, KY 40228
502.961.0001

CHAIN OF CUSTODY and ANALYTICAL REQUEST

Please print legibly

SHADED AREA FOR LAB USE ONLY

Client: CRWD #1

Phone/Email:

Bill To:

Phone/Email

Send Results to:

Phone/Email:

Compliance Monitoring (check one)? Yes ☐ No ☐

Samples Chlorinated (check one)? Yes ☐ No ☐

PWS ID#

STATE

PO#

MMLI Quote # (if applicable)

Batch#

Project Name

Collected by (Signature): [signature]

Sample ID#	COLLECTION DATE	COLLECTION TIME (24 hr)	SAMPLE DESCRIPTION Composite samples indicate begin time, end time and temp (°C) at end time	SAMPLE ANALYSIS REQUESTED Method ID if known (i.e. 8260B, 6010B/7470A...)	SAMPLE REMARKS (i.e. composite, grab, field readings, corrosive...)	Field Data pH S.U.	Field Data Temp °C	# OF CONTAINERS	MATRIX CODE (See Lower Left)	PRESERVATIVE CODE (See Lower Left)
	3-18-09	0730	001	RT						

1. Expedited services not available for all services, please call. 2. Samples received unannounced with less than 48 hours holding time remaining may be subject to additional surcharges. 3. Lab reserves the right to return unused portions of samples to client.

Relinquished by: (Signature)	Received By: (Signature)	DATE	TIME (24 hr)
William Duncan	[signature]	3-18-09	0900
Relinquished by: (Signature)	Received by: (Signature)	DATE	TIME (24 hr)
Relinquished by: (Signature)	Received for MMLI by:	DATE	TIME (24 hr)

MATRIX CODES:
DW – Drinking Water
SW – Solid Waste
SO – Soil/Solid
SL – Sludge
GW – Ground Water
WW – Waste Water
OL – Oil
SU – Surface Water

PRESERVATIVE CODES:
NI – Nitric acid (HNO_3)
HA – Hydrochloric Acid (HCl)
SH – Sodium Hydroxide (NaOH)
ST – Sodium Thiosulfate
ZN – Zinc acetate
SA – Sulfuric Acid (H_2SO_4)
4C – 4°C
AA – Ascorbic Acid
NO – No preservative
SS – Sodium sulfite

CONDITIONS UPON RECEIPT (CHECK ONE)
☐ Iced wet/Blue ____ °C Temp
☐ Ambient ____ °C Temp
☐ N/A

	YES	NO	N/A
Custody seals present/intact?	☐	☐	☐
Broken containers?	☐	☐	☐
COC agree with sample Labels?	☐	☐	☐
Correct containers for testing?	☐	☐	☐
Headspace issues acceptable?	☐	☐	☐
Holding time(s) acceptable?	☐	☐	☐
Preservative pH's acceptable?	☐	☐	☐
Was pH left unadjusted?*	☐	☐	☐
All samples listed on COC received?	☐	☐	☐
Samples properly preserved?	☐	☐	☐
Client's sample documents received?	☐	☐	☐
COC been relinquished?	☐	☐	☐
Are tests listed for each sample?	☐	☐	☐

Method of Shipment (check one): UPS ☐ FedEx ☐ MMLI ☐ US Postal ☐ Client ☐

Date Shipped:
Airbill#:
Logged in by: Location:
LAB NOTES:
Follow up action required: YES ☐ NO ☐
Client informed on:
Client Rep:
By:
Reviewed by:
Date:

SAMPLE CATEGORY = TC

KENTUCKY DIVISION OF WATER / DRINKING WATER BRANCH
BACTERIOLOGICAL ANALYSIS REPORT FORM

General Information – This Section To Be Completed By Collector

PWSID: KY0118059

PWS Name: CRWD #2

PWS Contact: Bill

PWS Address: 69 Marguerite Rd Concord Ky 42076

PWS Phone: 270-436-6304

Compliance Period (MMYYYY): 032009

Collection Date (MMDDYYYY): 03/12/2009
(All Samples Reported on this Form were Collected on this Date.)

Collector Name: William Duncan 3-13-09
Signature/Date

General Information – This Section To Be Completed By Lab

Lab ID: 00001

Lab Receipt Date (MMDDYYYY): 03/13/2009

Analysis Date (MMDDYYYY): 03/19/2009

Total Coliform Analysis Method Code: 378

E Coli Analysis Method Code:

Lab Analyst: Mindy Marton 3/19/09
Signature/Date

Lab Supervisor: 3/24/09
Signature/Date

Sample Information – This Section To Be Completed By Collector

Sample Type (RT, RP, or SP) (See Key)	Special Sample Reason (A, B, C, D, or E) (See Key)	Replacement Sample? (Y or Blank)	Location Code (See Instructions)	Repeat Location Code (DN, UP, or OR) (See Key)	Sample Time (24 hr)	Free Chlorine (Required for all disinfectants except Chloramine)	Total Chlorine (Required when disinfectant is Chloramine)
RT			001		0639	1.09	1.23

Analysis Information – This Section To Be Completed By Lab

Lab Sample Number	Analysis Time (24 hr)	Result (Total Coliform Count - or - TNTC - or - CNFG) (See Key)	Total Coliform (P/A)	E Coli (P/A)	Lab Sample Number of Original Sample (Required for Repeat and/or Replacement Samples) (See Instructions)
HS58645	1400		A		

The signatories of this form certify by their signatures that collection and analysis of the water sample analyzed and the resulting data hereby submitted, were completed in accordance with the provisions of 401 KAR Chapter 8, specifically including but not limited to 401 KAR 8:200, Section 1 and 401 KAR 8:040; and that the data submitted on this form is a true and accurate report of the results of collection and analysis performed pursuant to the above-referenced regulations. Violations of 401 KAR Chapter 8 are subject to severe penalties prescribed in KRS 224.99-010, up to $25,000 fine per day per violation and in some cases a violation

BACTERIOLOGICAL ANALYSIS REPORT FROM KEY

Sample Type:	RT = Routine (For Compliance)	RP = Repeat (For Compliance)	SP = Special (Not for Compliance)
Special Sample Reason: (Only if Sample Type = SP)	A = Suspected Contamination B = New Plant, Modification, or Line Extension	C = Treatment Modification D = Study/Investigation	E = Line Break, Emergency Repair
Repeat Location Code:	DN = Downstream	UP = Upstream	OR = Original Site

McCoy & McCoy Laboratories, Inc.
www.mccoylabs.com

PO Box 907 * 825 Industrial Rd.
Madisonville, KY 42431
270.821.7375
270.825.9200 fax

2456 Fortune Dr., Suite 160
Lexington, KY 40509
859.299.7775
859.299.7785 fax

173 Island Creek Rd.
Pikeville, KY 41501
606.432.3104
606.432.3171 fax

1800 Kentucky Ave.
Paducah, KY 42003
270.444.6547
270.444.6572 fax

5510 Fern Valley Rd.
Suite 104 Promenade Pavilion
Louisville, KY 40228
502.961.0001

SHADED AREA FOR LAB USE ONLY

CHAIN OF CUSTODY and ANALYTICAL REQUEST

Please print legibly.

Client: CRWD #-2

Phone/Email:

Bill To:

Phone/Email

Send Results to:

Phone/Email:

Compliance Monitoring (check one)? Yes ☐ No ☐

Samples Chlorinated (check one)? Yes ☐ No ☐

PO#

PWS ID#

STATE

Batch#

Project Name

Collected by (Signature): Will

MMLI Quote # (if applicable)

Sample ID#	COLLECTION DATE	COLLECTION TIME (24 hr)	SAMPLE DESCRIPTION Composite samples indicate begin time, end time and temp (°C) at end time	SAMPLE ANALYSIS REQUESTED Method ID if known (i.e. 8260B, 6010B/7470A...)	SAMPLE REMARKS (i.e. composite, grab, field readings, corrosive...)	Field Data pH S.U.	Field Data Temp °C	# OF CONTAINERS	MATRIX CODE (See Lower Left)	PRESERVATIVE CODE (See Lower Left)
	3-18-09	0630	001	RT						

1. Expedited services not available for all services, please call. 2. Samples received unannounced with less than 48 hours holding time remaining may be subject to additional surcharges. 3. Lab reserves the right to return unused portions of samples to client.

Relinquished by: (Signature)	Received By: (Signature)	DATE	TIME (24 hr)
William Duncan	[signature]	3-18-09	0900
Relinquished by: (Signature)	Received by: (Signature)	DATE	TIME (24 hr)
Relinquished by: (Signature)	Received for MMLI by:	DATE	TIME (24 hr)

CONDITIONS UPON RECEIPT (CHECK ONE)
☐ Iced wet/Blue ____ °C Temp
☐ Ambient ____ °C Temp ☐ N/A

	YES	NO	N/A
Custody seals present/intact?	☐	☐	☐
Broken containers?	☐	☐	☐
COC agree with sample Labels?	☐	☐	☐
Correct containers for testing?	☐	☐	☐
Headspace issues acceptable?	☐	☐	☐
Holding time(s) acceptable?	☐	☐	☐
Preservative pH is acceptable?	☐	☐	☐
Was pH left unadjusted?	☐	☐	☐
All samples listed on COC received?	☐	☐	☐
Samples properly preserved?	☐	☐	☐
Client's sample documents received?	☐	☐	☐
COC been relinquished?	☐	☐	☐
Are tests listed for each sample?	☐	☐	☐

Method of Shipment (check one): UPS ☐ FedEx ☐ MMLI ☐ US Postal ☐ Client ☐

Date Shipped:
Airbill#:

Logged in by: Location:

LAB NOTES:

Follow up action required: YES ☐ NO ☐

Client informed on:

Client Rep:

By:

Reviewed by:

Date:

MATRIX CODES:
DW – Drinking Water
SW – Solid Waste
SO – Soil/Solid
SL – Sludge
GW – Ground Water
WW – Waste Water
OL – Oil
SU – Surface Water

PRESERVATIVE CODES:
NI – Nitric acid (HNO_3)
HA – Hydrochloric Acid (HCl)
SH – Sodium Hydroxide (NaOH)
ST – Sodium Thiosulfate
ZN – Zinc acetate
SA – Sulfuric Acid (H_2SO_4)
4C – 4°C
AA – Ascorbic Acid
NO – No preservative
SS – Sodium sulfite

SAMPLE CATEGORY = TC

KENTUCKY DIVISION OF WATER / DRINKING WATER BRANCH
BACTERIOLOGICAL ANALYSIS REPORT FORM

General Information -- This Section To Be Completed By Collector

PWS ID: KY0180509

PWS Name: CRWD #3

PWS Contact: Bill

PWS Address: 69 Marguerite New Concord Ky 42076

PWS Phone: 270-436-6304

Compliance Period (MMYYYY): 03 2009

Collection Date (MMDDYYYY): 03 03 2009
(All Samples Reported on this Form were Collected on this Date.)

Collector Name: William Duncan 3-18-09
Signature/Date

General Information -- This Section To Be Completed By Lab

Lab ID: 00031

Lab Receipt Date (MMDDYYYY): 03 18 2009

Analysis Date (MMDDYYYY): 03 18 2009

Total Coliform Analysis Method Code: 020

E Coli Analysis Method Code:

Lab Analyst: Mindy Martin 3/19/09
Signature/Date

Lab Supervisor: [illegible] 3/20/09
Signature/Date

Sample Information -- This Section To Be Completed By Collector

Sample Type (RT, RP, or SP) (See Key)	Special Sample Reason (A, B, C, D, or E) (See Key)	Replacement Sample? (Y or Blank)	Location Code (See Instructions)	Repeat Location Code (DN, UP, or OR) (See Key)	Sample Time (24 hr)	Free Chlorine (Required for all disinfectants except Chloramine)	Total Chlorine (Required when disinfectant is Chloramine)
RT			021		0409	1.57	1.39

Analysis Information -- This Section To Be Completed By Lab

Lab Sample Number	Analysis Time (24 hr)	Result (Total Coliform Count - or - TNTC - or - CNFG) (See Key)	Total Coliform (P/A)	E Coli (P/A)	Lab Sample Number of Original Sample (Required for Repeat and/or Replacement Samples) (See Instructions)
A5580416	1400		A		

The signatories of this form certify by their signatures that collection and analysis of the water sample analyzed and the resulting data hereby submitted, were completed in accordance with the provisions of 401 KAR Chapter 8, specifically including but not limited to 401 KAR 8:200, Section 1 and 401 KAR 8:040; and that the data submitted on this form is a true and accurate report of the results of collection and analysis performed pursuant to the above-referenced regulations. Violations of 401 KAR Chapter 8 are subject to severe penalties prescribed in KRS 224.99-010, up to $25,000 fine per day per violation and in some cases a violation may subject the violator to prison.

BACTERIOLOGICAL ANALYSIS REPORT FROM KEY

Sample Type:	RT = Routine (For Compliance)	RP = Repeat (For Compliance)	SP = Special (Not for Compliance)
Special Sample Reason: (Only If Sample Type = SP)	A = Suspected Contamination B = New Plant, Modification, or Line Extension	C = Treatment Modification D = Study/Investigation	E = Line Break, Emergency Repair
Repeat Location Code: (Only If Sample Type = RP)	DN = Downstream	UP = Upstream	OR = Original Site

McCoy & McCoy Laboratories, Inc.
www.mccoylabs.com

PO Box 907 * 825 Industrial Rd.
Madisonville, KY 42431
270.821.7375
270.825.9200 fax

2456 Fortune Dr., Suite 160
Lexington, KY 40509
859.299.7775
859.299.7785 fax

173 Island Creek Rd.
Pikeville, KY 41501
606.432.3104
606.432.3171 fax

1800 Kentucky Ave.
Paducah, KY 42003
270.444.6547
270.444.6572 fax

5510 Fern Valley Rd.
Suite 104 Promenade Pavilion
Louisville, KY 40228
502.961.0001

SHADED AREA FOR LAB USE ONLY

CHAIN OF CUSTODY and ANALYTICAL REQUEST

Please print legibly

Client: CRWD # 3	Bill To:	Send Results to:	Compliance Monitoring (check one)? Yes ☐ No ☐ Samples Chlorinated (check one)? Yes ☐ No ☐
			PO#
Phone/Email:	Phone/Email	Phone/Email:	PWS ID# / STATE
Batch#:	Project Name	Collected by (Signature): Bill	MMLI Quote # (if applicable)

Sample ID#	COLLECTION DATE	COLLECTION TIME (24 hr)	SAMPLE DESCRIPTION Composite samples indicate begin time, end time and temp (°C) at end time	SAMPLE ANALYSIS REQUESTED Method ID if known (i.e. 8260B, 6010B/7470A...)	SAMPLE REMARKS (i.e. composite, grab, field readings, corrosive...)	Field Data pH S.U.	Field Data Temp °C	# OF CONTAINERS	MATRIX CODE (See Lower Left)	PRESERVATIVE CODE (See Lower Left)
	3-18-09	0600	001	RT						

1. Expedited services not available for all services, please call. 2. Samples received unannounced with less than 48 hours holding time remaining may be subject to additional surcharges. 3. Lab reserves the right to return unused portions of samples to client.

Relinquished by: (Signature)	Received By: (Signature)	DATE	TIME (24 hr)
William Duncan	[illegible]	3-18-09	0900
Relinquished by: (Signature)	Received by: (Signature)	DATE	TIME (24 hr)
Relinquished by: (Signature)	Received for MMLI by:	DATE	TIME (24 hr)

CONDITIONS UPON RECEIPT (CHECK ONE)
☐ Iced wet/Blue: ____ °C Temp
☒ Ambient: ____ °C Temp ☒ N/A

	YES	NO	N/A
Custody seals present/intact?	☐	☐	☒
Broken containers?	☐	☐	☒
COC agree with sample Labels?	☐	☐	☒
Correct containers for testing?	☐	☐	☒
Headspace issues acceptable?	☐	☐	☒
Holding time(s) acceptable?	☐	☐	☒
Preservative pH's acceptable?	☐	☐	☒
Was pH left unadjusted?	☐	☐	☒
All samples listed on COC received?	☒	☐	☐
Samples properly preserved?	☐	☐	☒
Client's sample documents received?	☐	☐	☒
COC been relinquished?	☐	☐	☒
Are tests listed for each sample?	☐	☐	☒

Method of Shipment (check one): UPS ☐ FedEx ☐ MMLI ☐ USPostal ☐ Client ☒
Date Shipped:
Airbill #:
Logged in by: Location:
LAB NOTES:
Follow up action required: YES ☐ NO ☐
Client information:
Client Rep:
By:
Reviewed by:
Date:

MATRIX CODES:
DW – Drinking Water
SW – Solid Waste
SO – Soil/Solid
SL – Sludge
GW – Ground Water
WW – Waste Water
OL – Oil
SU – Surface Water

PRESERVATIVE CODES:
NI – Nitric acid (HNO_3)
HA – Hydrochloric Acid (HCl)
SH – Sodium Hydroxide (NaOH)
ST – Sodium Thiosulfate
ZN – Zinc acetate
SA – Sulfuric Acid (H_2SO_4)
4C – 4°C
AA – Ascorbic Acid
NO – No preservative
SS – Sodium sulfite

X

SAMPLE CATEGORY = TC

KENTUCKY DIVISION OF WATER / DRINKING WATER BRANCH
BACTERIOLOGICAL ANALYSIS REPORT FORM

General Information – This Section To Be Completed By Collector

PWS ID: KY0183106

PWS Name: CRWD # 4

PWS Contact: Bill

PWS Address: 69 Marguerite, New Concord, Ky 42076

PWS Phone: 270-436-6304

Compliance Period (MMYYYY): 092009

Collection Date (MMDDYYYY): 03/18/2009
(All Samples Reported on this Form were Collected on this Date.)

Collector Name: William Duncan 3-18-09
Signature/Date

General Information – This Section To Be Completed By Lab

Lab ID: 00001

Lab Receipt Date (MMDDYYYY): 03/18/2009

Analysis Date (MMDDYYYY): 03/18/2009

Total Coliform Analysis Method Code: 008

E Coli Analysis Method Code:

Lab Analyst: Mindy Martin 3/19/09
Signature/Date

Lab Supervisor: [signature] 3/19/09
Signature/Date

Sample Information – This Section To Be Completed By Collector

Sample Type (RT, RP, or SP) (See Key)	Special Sample Reason (A, B, C, D, or E) (See Key)	Replacement Sample? (Y or Blank)	Location Code (See Instructions)	Repeat Location Code (DN, UP, or OR) (See Key)	Sample Time (24 hr)	Free Chlorine (Required for all disinfectants except Chloramine)	Total Chlorine (Required when disinfectant is Chloramine)
RT			001		0955	1.16	1.94

Analysis Information – This Section To Be Completed By Lab

Lab Sample Number	Analysis Time (24 hr)	Result (Total Coliform Count - or - TNTC - or - CNFG) (See Key)	Total Coliform (P/A)	E Coli (P/A)	Lab Sample Number of Original Sample (Required for Repeat and/or Replacement Samples) (See Instructions)
458447	1400		A		

The signatories of this form certify by their signatures that collection and analysis of the water sample analyzed and the resulting data hereby submitted, were completed in accordance with the provisions of 401 KAR Chapter 8, specifically including but not limited to 401 KAR 8:200, Section 1 and 401 KAR 8:040; and that the data submitted on this form is a true and accurate report of the results of collection and analysis performed pursuant to the above-referenced regulations. Violations of 401 KAR Chapter 8 are subject to severe penalties prescribed in KRS 224.99-010 up to $25,000 fine per day per violation and in some cases a violation may subjection the violator to prison.

BACTERIOLOGICAL ANALYSIS REPORT FROM KEY

Sample Type:	RT = Routine (For Compliance)	RP = Repeat (For Compliance)	SP = Special (Not for Compliance)
Special Sample Reason: (Only If Sample Type = SP)	A = Suspected Contamination B = New Plant, Modification, or Line Extension	C = Treatment Modification D = Study/Investigation	E = Line Break, Emergency Repair
Repeat Location Code:	DN = Downstream	UP = Upstream	OR = Original Site

McCoy & McCoy Laboratories, Inc.
www.mccoylabs.com

PO Box 907 * 825 Industrial Rd.
Madisonville, KY 42431
270.821.7375
270.825.9200 fax

2456 Fortune Dr., Suite 160
Lexington, KY 40509
859.299.7775
859.299.7785 fax

173 Island Creek Rd.
Pikeville, KY 41501
606.432.3104
606.432.3171 fax

1800 Kentucky Ave.
Paducah, KY 42003
270.444.6547
270.444.6572 fax

5510 Fern Valley Rd.
Suite 104 Promenade Pavilion
Louisville, KY 40228
502.961.0001

SHADED AREA FOR LAB USE ONLY

CHAIN OF CUSTODY and ANALYTICAL REQUEST

Please print legibly.

Client:	Bill To:	Send Results to:	Compliance Monitoring (check one)? Yes ☐ No ☐ Samples Chlorinated (check one)? Yes ☐ No ☐	PO#
CRWD #4				
Phone/Email:	Phone/Email	Phone/Email:	PWS ID# / STATE	
Batch#	Project Name	Collected by (Signature): BW	MMLI Quote # (if applicable)	

Sample ID#	COLLECTION DATE	COLLECTION TIME (24 hr)	SAMPLE DESCRIPTION Composite samples indicate begin time, end time and temp (°C) at end time	SAMPLE ANALYSIS REQUESTED Method ID if known (i.e. 8260B, 6010B/7470A...)	SAMPLE REMARKS (i.e. composite, grab, field readings, corrosive...)	Field Data pH S.U.	Field Data Temp °C	# OF CONTAINERS	MATRIX CODE (See Lower Left)	PRESERVATIVE CODE (See Lower Left)
	3-18-09	0800	001	RT						

1. Expedited services not available for all services, please call. 2. Samples received unannounced with less than 48 hours holding time remaining may be subject to additional surcharges. 3. Lab reserves the right to return unused portions of samples to client.

Relinquished by: (Signature)	Received By: (Signature)	DATE	TIME (24 hr)
William Duncan	[illegible]	3-18-09	0900
Relinquished by: (Signature)	Received by: (Signature)	DATE	TIME (24 hr)
Relinquished by: (Signature)	Received for MMLI by:	DATE	TIME (24 hr)

CONDITIONS UPON RECEIPT (CHECK ONE)
☐ Iced wet/Blue C Temp
☐ Ambient C Temp ☐ N/A

	YES	NO	N/A
Custody seals present/intact?	☐	☐	☐
Broken containers?	☐	☐	☐
COC agree with sample Labels?	☐	☐	☐
Correct containers for testing?	☐	☐	☐
Headspace issues acceptable?	☐	☐	☐
Holding time(s) acceptable?	☐	☐	☐
Preservative pH is acceptable?	☐	☐	☐
Was pH left unadjusted?	☐	☐	☐
All samples listed on COC received?	☐	☐	☐
Samples properly preserved?	☐	☐	☐
Client's sample documents received?	☐	☐	☐
COC been relinquished?	☐	☐	☐
Are tests listed for each sample?	☐	☐	☐

Method of Shipment (check one): US Postal ☐ UPS ☐ FedEx ☐ MMLI ☐ Client ☐
Date Shipped:
Airbill #:
Logged in by: Location:
LAB NOTES:
Follow up action required: YES ☐ NO ☐
Client informed on: / /
Client Rep:
By:
Reviewed by:
Date:

MATRIX CODES:
DW – Drinking Water
SW – Solid Waste
SO – Soil/Solid
SL – Sludge
GW – Ground Water
WW – Waste Water
OL – Oil
SU – Surface Water

PRESERVATIVE CODES:
NI – Nitric acid (HNO_3)
HA – Hydrochloric Acid (HCl)
SH – Sodium Hydroxide (NaOH)
ST – Sodium Thiosulfate
ZN – Zinc acetate
SA – Sulfuric Acid (H_2SO_4)
4C – 4°C
AA – Ascorbic Acid
NO – No preservative
SS – Sodium sulfite

SAMPLE CATEGORY = TC

KENTUCKY DIVISION OF WATER / DRINKING WATER BRANCH
BACTERIOLOGICAL ANALYSIS REPORT FORM

General Information -- This Section To Be Completed By Collector

PWSID: KY0180944

PWS Name: CRWD # 1

PWS Contact: Bill

PWS Address: 69 Marguerite Rd New Concord Ky 42076

PWS Phone: 270-436-6304

Compliance Period (MMYYYY): 03 2009

Collection Date (MMDDYYYY): 03 25 2009
(All Samples Reported on this Form were Collected on this Date.)

Collector Name: William Duncan 3-25-09
Signature/Date

General Information -- This Section To Be Completed By Lab

Lab ID: 0000 38

Lab Receipt Date (MMDDYYYY): 03252009

Analysis Date (MMDDYYYY): 03252009

Total Coliform Analysis Method Code: 328

E Coli Analysis Method Code:

Lab Analyst: Mindy Martin 3/26/09
Signature/Date

Lab Supervisor: 3/26/09
Signature/Date

Sample Information -- This Section To Be Completed By Collector

Sample Type (RT, RP, or SP) (See Key)	Special Sample Reason (A, B, C, D, or E) (See Key)	Replacement Sample? (Y or Blank)	Location Code (See Instructions)	Repeat Location Code (DN, UP, or OR) (See Key)	Sample Time (24 hr)	Free Chlorine (Required for all disinfectants except Chloramine)	Total Chlorine (Required when disinfectant is Chloramine)
RT			009		0739	1.35	1.41
						.	.
						.	.
						.	.
						.	.
						.	.
						.	.
						.	.
						.	.
						.	.
						.	.

Analysis Information -- This Section To Be Completed By Lab

Lab Sample Number	Analysis Time (24 hr)	Result (Total Coliform Count - or - TNTC - or - CNFG) (See Key)	Total Coliform (P/A)	E Coli (P/A)	Lab Sample Number of Original Sample (Required for Repeat and/or Replacement Samples) (See Instructions)
A60144	1345		A		

The signatories of this form certify by their signatures that collection and analysis of the water sample analyzed and the resulting data hereby submitted, were completed in accordance with the provisions of 401 KAR Chapter 8, specifically including but not limited to 401 KAR 8:200, Section 1 and 401 KAR 8:040; and that the data submitted on this form is a true and accurate report of the results of collection and analysis performed pursuant to the above-referenced regulations. Violations of 401 KAR Chapter 8 are subject to severe penalties prescribed in KRS 224.99-010, up to $25,000 fine per day per violation and in some cases a violation

BACTERIOLOGICAL ANALYSIS REPORT FROM KEY

Sample Type:	RT = Routine (For Compliance)	RP = Repeat (For Compliance)	SP = Special (Not for Compliance)
Special Sample Reason: (Only If Sample Type = SP)	A = Suspected Contamination B = New Plant, Modification, or Line Extension	C = Treatment Modification D = Study/Investigation	E = Line Break, Emergency Repair
Repeat Location Code:	DN = Downstream	UP = Upstream	OR = Original Site

McCoy & McCoy Laboratories, Inc.
www.mccoylabs.com

PO Box 907 * 825 Industrial Rd.
Madisonville, KY 42431
270.821.7375
270.825.9200 fax

2456 Fortune Dr., Suite 160
Lexington, KY 40509
859.299.7775
859.299.7785 fax

173 Island Creek Rd.
Pikeville, KY 41501
606.432.3104
606.432.3171 fax

1800 Kentucky Ave.
Paducah, KY 42003
270.444.6547
270.444.6572 fax

5510 Fern Valley Rd.
Suite 104 Promenade Pavilion
Louisville, KY 40228
502.961.0001

SHADED AREA FOR LAB USE ONLY

CHAIN OF CUSTODY and ANALYTICAL REQUEST

Please print legibly.

Client: CRWDH 1	Bill To:	Send Results to:	Compliance Monitoring (check one)? Yes ☐ No ☐ Samples Chlorinated (check one)? Yes ☐ No ☐	PO#
Phone/Email:	Phone/Email	Phone/Email:	PWS ID# / STATE	
Batch#	Project Name	Collected by (Signature):	MMLI Quote # (if applicable)	

Sample ID#	COLLECTION DATE	TIME (24 hr)	SAMPLE DESCRIPTION Composite samples indicate begin time, end time and temp (°C) at end time	SAMPLE ANALYSIS REQUESTED Method ID if known (i.e. 8260B, 6010B/7470A...)	SAMPLE REMARKS (i.e. composite, grab, field readings, corrosive...)	Field Data pH S.U.	Field Data Temp °C	# OF CONTAINERS	MATRIX CODE (See Lower Left)	PRESERVATIVE CODE (See Lower Left)
	3-25-09	0730	002	KT						

1. Expedited services not available for all services, please call. 2. Samples received unannounced with less than 48 hours holding time remaining may be subject to additional surcharges. 3. Lab reserves the right to return unused portions of samples to client.

Relinquished by: (Signature)	Received By: (Signature)	DATE	TIME (24 hr)
William Duncan	Dave Brooks	3-25-09	0900
Relinquished by: (Signature)	Received by: (Signature)	DATE	TIME (24 hr)
Relinquished by: (Signature)	Received for MMLI by:	DATE	TIME (24 hr)

CONDITIONS UPON RECEIPT (CHECK ONE)
☐ Iced wet/Blue ____ °C Temp.
☐ Ambient ____ °C Temp. ☐ N/A

	YES	NO	N/A
Custody seals present/intact?	☐	☐	☐
Broken containers?	☐	☐	☐
COC agree with sample Labels?	☐	☐	☐
Correct containers for testing?	☐	☐	☐
Headspace issues acceptable?	☐	☐	☐
Holding time(s) acceptable?	☐	☐	☐
Preservative pH's acceptable?	☐	☐	☐
Was pH left unadjusted?	☐	☐	☐
All samples listed on COC received?	☐	☐	☐
Samples properly preserved?	☐	☐	☐
Client's sample documents received?	☐	☐	☐
COC been relinquished?	☐	☐	☐
Are tests listed for each sample?	☐	☐	☐

Method of Shipment (check one): US Postal ☐ UPS ☐ FedEx ☐ MMLI ☐ Client ☐
Date Shipped:
Airbill #:
Logged in by: ____ Location: ____
LAB NOTES:
Follow up action required: YES ☐ NO ☐
Client informed on:
Client Rep:
By:
Reviewed by:
Date:

MATRIX CODES:
DW – Drinking Water
SW – Solid Waste
SO – Soil/Solid
SL – Sludge
GW – Ground Water
WW – Waste Water
OL – Oil
SU – Surface Water

PRESERVATIVE CODES:
NI – Nitric acid (HNO_3)
HA – Hydrochloric Acid (HCl)
SH – Sodium Hydroxide (NaOH)
ST – Sodium Thiosulfate
ZN – Zinc acetate
SA – Sulfuric Acid (H_2SO_4)
4C – 4°C
AA – Ascorbic Acid
NO – No preservative
SS – Sodium sulfite

SAMPLE CATEGORY = TC

KENTUCKY DIVISION OF WATER / DRINKING WATER BRANCH
BACTERIOLOGICAL ANALYSIS REPORT FORM

General Information -- This Section To Be Completed By Collector

PWS ID: KY0180509

PWS Name: CRWD # 2

PWS Contact: Bill

PWS Address: 69 Marguerite Ave Concord Ky 42076

PWS Phone: 270-436-6304

Compliance Period (MMYYYY): 032009

Collection Date (MMDDYYYY): 03252009
(All Samples Reported on this Form were Collected on this Date.)

Collector Name: William Duncan 3-25-09
Signature/Date

General Information -- This Section To Be Completed By Lab

Lab ID: 00031

Lab Receipt Date (MMDDYYYY): 03252009

Analysis Date (MMDDYYYY): 03252009

Total Coliform Analysis Method Code: 328

E Coli Analysis Method Code:

Lab Analyst: Mindy Martin 3/26/09
Signature/Date

Lab Supervisor: 3/26/09
Signature/Date

Sample Information -- This Section To Be Completed By Collector

Sample Type (RT, RP, or SP) (See Key)	Special Sample Reason (A, B, C, D, or E) (See Key)	Replacement Sample? (Y or Blank)	Location Code (See Instructions)	Repeat Location Code (DN, UP, or OR) (See Key)	Sample Time (24 hr)	Free Chlorine (Required for all disinfectants except Chloramine)	Total Chlorine (Required when disinfectant is Chloramine)
RT			002		0630	1.51	1.58

Analysis Information -- This Section To Be Completed By Lab

Lab Sample Number	Analysis Time (24 hr)	Result (Total Coliform Count - or - TNTC - or - CNFG) (See Key)	Total Coliform (P/A)	E Coli (P/A)	Lab Sample Number of Original Sample (Required for Repeat and/or Replacement Samples) (See Instructions)
AG60146	1345		A		

The signatories of this form certify by their signatures that collection and analysis of the water sample analyzed and the resulting data hereby submitted, were completed in accordance with the provisions of 401 KAR Chapter 8, specifically including but not limited to 401 KAR 8:200, Section 1 and 401 KAR 5:040; and that the data submitted on this form is a true and accurate report of the results of collection and analysis performed pursuant to the above-referenced regulations. Violations of 401 KAR Chapter 8 are subject to severe penalties prescribed in KRS 224.99-010, up to $25,000 fine per day per violation and in some cases a violation

BACTERIOLOGICAL ANALYSIS REPORT FROM KEY

Sample Type:	RT = Routine (For Compliance)	RP = Repeat (For Compliance)	SP = Special (Not for Compliance)
Special Sample Reason: (Only If Sample Type = SP)	A = Suspected Contamination B = New Plant, Modification, or Line Extension	C = Treatment Modification D = Study/Investigation	E = Line Break, Emergency Repair
Repeat Location Code:	DN = Downstream	UP = Upstream	OR = Other Location

McCoy & McCoy Laboratories, Inc.
www.mccoylabs.com

PO Box 907 * 825 Industrial Rd.
Madisonville, KY 42431
270.821.7375
270.825.9200 fax

2456 Fortune Dr., Suite 160
Lexington, KY 40509
859.299.7775
859.299.7785 fax

173 Island Creek Rd.
Pikeville, KY 41501
606.432.3104
606.432.3171 fax

1800 Kentucky Ave.
Paducah, KY 42003
270.444.6547
270.444.6572 fax

5510 Fern Valley Rd.
Suite 104 Promenade Pavilion
Louisville, KY 40228
502.961.0001

SHADED AREA FOR LAB USE ONLY

CHAIN OF CUSTODY and ANALYTICAL REQUEST

Please print legibly.

Client: CRWD # 2

Phone/Email:

Bill To:

Phone/Email

Send Results to:

Phone/Email:

Compliance Monitoring (check one)? Yes ☐ No ☐

Samples Chlorinated (check one)? Yes ☐ No ☐

PO#

PWS ID#

STATE

Batch#

Project Name

Collected by (Signature): RJC

MMLI Quote # (if applicable)

Sample ID#	COLLECTION DATE	COLLECTION TIME (24 hr)	SAMPLE DESCRIPTION Composite samples indicate begin time, end time and temp (°C) at end time	SAMPLE ANALYSIS REQUESTED Method ID if known (i.e. 8260B, 6010B/7470A...)	SAMPLE REMARKS (i.e. composite, grab, field readings, corrosive...)	Field Data pH S.U.	Field Data Temp °C	# OF CONTAINERS	MATRIX CODE (See Lower Left)	PRESERVATIVE CODE (See Lower Left)
	3-25-09	0630	002	RT						

1. Expedited services not available for all services, please call. 2. Samples received unannounced with less than 48 hours holding time remaining may be subject to additional surcharges. 3. Lab reserves the right to return unused portions of samples to client.

Relinquished by: (Signature)	Received By: (Signature)	DATE	TIME (24 hr)
Thom Duncan	[signature]	3-25-09	0900
Relinquished by: (Signature)	Received by: (Signature)	DATE	TIME (24 hr)
Relinquished by: (Signature)	Received for MMLI by:	DATE	TIME (24 hr)

CONDITIONS UPON RECEIPT (CHECK ONE)
☐ Iced wet/Blue ____ °C Temp
☐ Ambient ____ °C Temp ☐ N/A

	YES	NO	N/A
Custody seals present/intact?	☐	☐	☐
Broken containers?	☐	☐	☐
COC agree with sample Labels?	☐	☐	☐
Correct containers for testing?	☐	☐	☐
Headspace issues acceptable?	☐	☐	☐
Holding time(s) acceptable?	☐	☐	☐
Preservative pH's acceptable?	☐	☐	☐
Was pH left unadjusted?	☐	☐	☐
All samples listed on COC received?	☐	☐	☐
Samples properly preserved?	☐	☐	☐
Client's sample documents received?	☐	☐	☐
COC been relinquished?	☐	☐	☐
Are tests listed for each sample?	☐	☐	☐

Method of Shipment (check one) UPS ☐ FedEx ☐ MMLI ☐ US Postal ☐ Client ☐

Date Shipped:

Airbill#:

Logged in by: Location:

LAB NOTES:

Follow up action required: YES ☐ NO ☐

Client informed on: / /

Client Rep:

By:

Reviewed by:

Date: / /

MATRIX CODES:
DW – Drinking Water
GW – Ground Water
SW – Solid Waste
WW – Waste Water
SO – Soil/Solid
OL – Oil
SL – Sludge
SU – Surface Water

PRESERVATIVE CODES:
NI – Nitric acid (HNO_3)
HA – Hydrochloric Acid (HCl)
SH – Sodium Hydroxide (NaOH)
ST – Sodium Thiosulfate
ZN – Zinc acetate
SA – Sulfuric Acid (H_2SO_4)
4C – 4°C
AA – Ascorbic Acid
NO – No preservative
SS – Sodium sulfite

SAMPLE CATEGORY = TC

KENTUCKY DIVISION OF WATER / DRINKING WATER BRANCH
BACTERIOLOGICAL ANALYSIS REPORT FORM

General Information – This Section To Be Completed By Collector

PWS ID: KY0180502

PWS Name: CRWD #3

PWS Contact: Bill

PWS Address: 69 Marguerite New Concord Ky 42076

PWS Phone: 270-436-6304

Compliance Period (MMYYYY): 032009

Collection Date (MMDDYYYY): 03/25/2009 (All Samples Reported on this Form were Collected on this Date.)

Collector Name: William Duncan 3-25-09 (Signature/Date)

General Information – This Section To Be Completed By Lab

Lab ID: 00031

Lab Receipt Date (MMDDYYYY): 03252009

Analysis Date (MMDDYYYY): 03252009

Total Coliform Analysis Method Code: 528

E Coli Analysis Method Code:

Lab Analyst: Mindy Martin 3/26/09 (Signature/Date)

Lab Supervisor: 3/26/09 (Signature/Date)

Sample Information – This Section To Be Completed By Collector

Sample Type (RT, RP, or SP) (See Key)	Special Sample Reason (A, B, C, D, or E) (See Key)	Replacement Sample? (Y or Blank)	Location Code (See Instructions)	Repeat Location Code (DN, UP, or OR) (See Key)	Sample Time (24 hr)	Free Chlorine (Required for all disinfectants except Chloramine)	Total Chlorine (Required when disinfectant is Chloramine)
RT			002		0600	1.06	1.23

Analysis Information – This Section To Be Completed By Lab

Lab Sample Number	Analysis Time (24 hr)	Result (Total Coliform Count - or - TNTC - or - CNFG) (See Key)	Total Coliform (P/A)	E Coli (P/A)	Lab Sample Number of Original Sample (Required for Repeat and/or Replacement Samples) (See Instructions)
A6601417	1345		A		

The signatories of this form certify by their signatures that collection and analysis of the water sample analyzed and the resulting data hereby submitted, were completed in accordance with the provisions of 401 KAR Chapter 8, specifically including but not limited to 401 KAR 8:200, Section 1 and 401 KAR 8:040; and that the data submitted on this form is a true and accurate report of the results of collection and analysis performed pursuant to the above-referenced regulations. Violations of 401 KAR Chapter 8 are subject to severe penalties prescribed in KRS 224.99-010, up to $25,000 fine per day per violation and in some cases a violation

BACTERIOLOGICAL ANALYSIS REPORT FROM KEY

Sample Type:	RT = Routine (For Compliance)	RP = Repeat (For Compliance)	SP = Special (Not for Compliance)
Special Sample Reason: (Only If Sample Type = SP)	A = Suspected Contamination B = New Plant, Modification, or Line Extension	C = Treatment Modification D = Study/Investigation	E = Line Break, Emergency Repair
Repeat Location Code:	DN = Downstream	UP = Upstream	OR = Other

McCoy & McCoy Laboratories, Inc.
www.mccoylabs.com

PO Box 907 * 825 Industrial Rd.
Madisonville, KY 42431
270.821.7375
270.825.9200 fax

2456 Fortune Dr., Suite 160
Lexington, KY 40509
859.299.7775
859.299.7785 fax

173 Island Creek Rd.
Pikeville, KY 41501
606.432.3104
606.432.3171 fax

1800 Kentucky Ave.
Paducah, KY 42003
270.444.6547
270.444.6572 fax

5510 Fern Valley Rd.
Suite 104 Promenade Pavilion
Louisville, KY 40228
502.961.0001

CHAIN OF CUSTODY and ANALYTICAL REQUEST

Please print legibly.

SHADED AREA FOR LAB USE ONLY

Client:	Bill To:	Send Results to:	Compliance Monitoring (check one)? Yes ☐ No ☐ Samples Chlorinated (check one)? Yes ☐ No ☐	PO#
CRWD #3				
Phone/Email:	Phone/Email	Phone/Email:	PWS ID# / STATE	
Batch#	Project Name	Collected by (Signature): BW	MMLI Quote # (if applicable)	

Sample ID#	COLLECTION DATE	COLLECTION TIME (24 hr)	SAMPLE DESCRIPTION Composite samples indicate begin time, end time and temp (°C) at end time	SAMPLE ANALYSIS REQUESTED Method ID if known (i.e. 8260B, 6010B/7470A...)	SAMPLE REMARKS (i.e. composite, grab, field readings, corrosive...)	Field Data pH S.U.	Field Data Temp °C	# OF CONTAINERS	MATRIX CODE (See Lower Left)	PRESERVATIVE CODE (See Lower Left)
	3-25-09	0600	009	KT						

1. Expedited services not available for all services, please call. 2. Samples received unannounced with less than 48 hours holding time remaining may be subject to additional surcharges. 3. Lab reserves the right to return unused portions of samples to client.

Relinquished by: (Signature)	Received By: (Signature)	DATE	TIME (24 hr)
William Duncan	[illegible]	3-25-09	0900
Relinquished by: (Signature)	Received by: (Signature)	DATE	TIME (24 hr)
Relinquished by: (Signature)	Received for MMLI by:	DATE	TIME (24 hr)

CONDITIONS UPON RECEIPT (CHECK ONE)
☑ Iced wet/Blue °C Temp
☐ Ambient °C Temp ☐ N/A

	YES	NO	N/A
Custody seals present/intact?	☐	☐	☐
Broken containers?	☐	☐	☐
COC agree with sample Labels?	☐	☐	☐
Correct containers for testing?	☐	☐	☐
Headspace issues acceptable?	☐	☐	☐
Holding time(s) acceptable?	☐	☐	☐
Preservative pH's acceptable?	☐	☐	☐
Was pH left unadjusted?	☐	☐	☐
All samples listed on COC received?	☐	☐	☐
Samples properly preserved?	☐	☐	☐
Client's sample documents received?	☐	☐	☐
COC been relinquished?	☐	☐	☐
Are tests listed for each sample?	☐	☐	☐

Method of Shipment (check one): US Postal ☐ UPS ☐ FedEx ☐ MMLI ☐ Client ☐
Date Shipped:
Airbill#:
Logged in by: Location:
LAB NOTES:
Follow up action required YES ☐ NO ☐
Client informed on:
Client Rep:
By:
Reviewed by:
Date:

MATRIX CODES:
DW – Drinking Water
SW – Solid Waste
SO – Soil/Solid
SL – Sludge
GW – Ground Water
WW – Waste Water
OL – Oil
SU – Surface Water

PRESERVATIVE CODES:
NI – Nitric acid (HNO_3)
HA – Hydrochloric Acid (HCl)
SH – Sodium Hydroxide (NaOH)
ST – Sodium Thiosulfate
ZN – Zinc acetate
SA – Sulfuric Acid (H_2SO_4)
4C – 4°C
AA – Ascorbic Acid
NO – No preservative
SS – Sodium sulfite

SAMPLE CATEGORY = TC

KENTUCKY DIVISION OF WATER / DRINKING WATER BRANCH
BACTERIOLOGICAL ANALYSIS REPORT FORM

General Information – This Section To Be Completed By Collector

PWS ID: KY0183106

Compliance Period (MMYYYY): 032009

PWS Name: CRWD # 4

PWS Contact: Bill

Collection Date (MMDDYYYY): 03252009 (All Samples Reported on this Form were Collected on this Date.)

PWS Address: 69 Marguerite, New Concord Ky 42076

PWS Phone: 270-436-6304

Collector Name: William Duncan 3-25-09 (Signature/Date)

General Information – This Section To Be Completed By Lab

Lab ID: 00031

Lab Receipt Date (MMDDYYYY): 03252009

Total Coliform Analysis Method Code: 328

Analysis Date (MMDDYYYY): 03252009

E Coli Analysis Method Code:

Lab Analyst: Mindy Martin 3/26/09 (Signature/Date)

Lab Supervisor: 3/26/09 (Signature/Date)

Sample Information – This Section To Be Completed By Collector

Sample Type (RT, RP, or SP) (See Key)	Special Sample Reason (A, B, C, D, or E) (See Key)	Replacement Sample? (Y or Blank)	Location Code (See Instructions)	Repeat Location Code (DN, UP, or OR) (See Key)	Sample Time (24 hr)	Free Chlorine (Required for all disinfectants except Chloramine)	Total Chlorine (Required when disinfectant is Chloramine)
RT			003		0800	1.31	1.39

Analysis Information – This Section To Be Completed By Lab

Lab Sample Number	Analysis Time (24 hr)	Result (Total Coliform Count - or - TNTC - or - CNFG) (See Key)	Total Coliform (P/A)	E Coli (P/A)	Lab Sample Number of Original Sample (Required for Repeat and/or Replacement Samples) (See Instructions)
mm 3/26/09 AG60148					
~~AG60~~	1345		A		

The signatories of this form certify by their signatures that collection and analysis of the water sample analyzed and the resulting data hereby submitted, were completed in accordance with the provisions of 401 KAR Chapter 8, specifically including but not limited to 401 KAR 8:200, Section 1 and 401 KAR 8:040; and that the data submitted on this form is a true and accurate report of the results of collection and analysis performed pursuant to the above-referenced regulations. Violations of 401 KAR Chapter 8 are subject to severe penalties prescribed in KRS 224.99-010, up to $25,000 fine per day per violation and in some cases a violation

BACTERIOLOGICAL ANALYSIS REPORT FROM KEY

Sample Type:	RT = Routine (For Compliance)	RP = Repeat (For Compliance)	SP = Special (Not for Compliance)
Special Sample Reason: (Only if Sample Type = SP)	A = Suspected Contamination B = New Plant, Modification, or Line Extension	C = Treatment Modification D = Study/Investigation	E = Line Break, Emergency Repair
Repeat Location Code:	DN = Downstream	UP = Upstream	OR = Original Site

McCoy & McCoy Laboratories, Inc.
www.mccoylabs.com

PO Box 907 * 825 Industrial Rd.
Madisonville, KY 42431
270.821.7375
270.825.9200 fax

2456 Fortune Dr., Suite 160
Lexington, KY 40509
859.299.7775
859.299.7785 fax

173 Island Creek Rd.
Pikeville, KY 41501
606.432.3104
606.432.3171 fax

1800 Kentucky Ave.
Paducah, KY 42003
270.444.6547
270.444.6572 fax

5510 Fern Valley Rd.
Suite 104 Promenade Pavilion
Louisville, KY 40228
502.961.0001

SHADED AREA FOR LAB USE ONLY

CHAIN OF CUSTODY and ANALYTICAL REQUEST

Please print legibly.

Client:	Bill To:	Send Results to:	Compliance Monitoring (check one)? Yes ☐ No ☐ Samples Chlorinated (check one)? Yes ☐ No ☐	PO#
CRWD#4				
Phone/Email:	Phone/Email	Phone/Email:	PWS ID# / STATE	
Batch#	Project Name	Collected by (Signature): Bill	MMLI Quote # (if applicable)	

Sample ID#	COLLECTION DATE	COLLECTION TIME (24 hr)	SAMPLE DESCRIPTION Composite samples indicate begin time, end time and temp (°C) at end time	SAMPLE ANALYSIS REQUESTED Method ID if known (i.e. 8260B, 6010B/7470A...)	SAMPLE REMARKS (i.e. composite, grab, field readings, corrosive...)	Field Data pH S.U.	Field Data Temp °C	# OF CONTAINERS	MATRIX CODE (See Lower Left)	PRESERVATIVE CODE (See Lower Left)
	3-25-09	0800	003	RT						

1. Expedited services not available for all services, please call. 2. Samples received unannounced with less than 48 hours holding time remaining may be subject to additional surcharges. 3. Lab reserves the right to return unused portions of samples to client.

Relinquished by: (Signature)	Received By: (Signature)	DATE	TIME (24 hr)
William Duncan	[signature]	3-25-09	0900
Relinquished by: (Signature)	Received by: (Signature)	DATE	TIME (24 hr)
Relinquished by: (Signature)	Received for MMLI by:	DATE	TIME (24 hr)

CONDITIONS UPON RECEIPT (CHECK ONE)
☐ Iced wet/Blue ____ °C Temp
☐ Ambient ____ °C Temp ☐ N/A

	YES	NO	N/A
Custody seals present/intact?	☐	☐	☐
Broken containers?	☐	☐	☐
COC agree with sample Labels?	☐	☐	☐
Correct containers for testing?	☐	☐	☐
Headspace issues acceptable?	☐	☐	☐
Holding time(s) acceptable?	☐	☐	☐
Preservative pH's acceptable?	☐	☐	☐
Was pH left unadjusted?	☐	☐	☐
All samples listed on COC received?	☐	☐	☐
Samples properly preserved?	☐	☐	☐
Client's sample documents received?	☐	☐	☐
COC been relinquished?	☐	☐	☐
Are tests listed for each sample?	☐	☐	☐

Method of Shipment (check one): US Postal ☐ UPS ☐ FedEx ☐ MMLI ☐ Client ☐
Date Shipped:
Airbill #:
Logged in by: Location:
LAB NOTES:
Follow up action required? YES ☐ NO ☐
Client informed on:
Client Rep:
By:
Reviewed by:
Date:

MATRIX CODES:
DW – Drinking Water
SW – Solid Waste
SO – Soil/Solid
SL – Sludge
GW – Ground Water
WW – Waste Water
OL – Oil
SU – Surface Water

PRESERVATIVE CODES:
NI – Nitric acid (HNO_3)
HA – Hydrochloric Acid (HCl)
SH – Sodium Hydroxide (NaOH)
ST – Sodium Thiosulfate
ZN – Zinc acetate
SA – Sulfuric Acid (H_2SO_4)
4C – 4°C
AA – Ascorbic Acid
NO – No preservative
SS – Sodium sulfite

SAMPLE CATEGORY = TC

KENTUCKY DIVISION OF WATER / DRINKING WATER BRANCH
BACTERIOLOGICAL ANALYSIS REPORT FORM

General Information – This Section To Be Completed By Collector

PWS ID: KY0180549

PWS Name: CRWD # 1

PWS Contact: Bill

PWS Address: 69 Marguerite New Concord Ky 42076

PWS Phone: 270-436-6304

Compliance Period (MMYYYY): 042009

Collection Date (MMDDYYYY): 04232009
(All Samples Reported on this Form were Collected on this Date.)

Collector Name: William Duncan 4-23-09
Signature/Date

General Information – This Section To Be Completed By Lab

Lab ID: 80591

Lab Receipt Date (MMDDYYYY): 04241009

Analysis Date (MMDDYYYY): 04242009

Total Coliform Analysis Method Code: 09A

E Coli Analysis Method Code:

Lab Analyst: Mindy Martin 4/23/09
Signature/Date

Lab Supervisor: 4/23/09
Signature/Date

Sample Information – This Section To Be Completed By Collector / Analysis Information – This Section To Be Completed By Lab

Sample Type (RT, RP, or SP) (See Key)	Special Sample Reason (A, B, C, D, or E) (See Key)	Replacement Sample? (Y or Blank)	Location Code (See Instructions)	Repeat Location Code (DN, UP, or OR) (See Key)	Sample Time (24 hr)	Free Chlorine (Required for all disinfectants except Chloramine)	Total Chlorine (Required when disinfectant is Chloramine)	Lab Sample Number	Analysis Time (24 hr)	Result (Total Coliform Count - or - TNTC - or - CNFG) (See Key)	Total Coliform (P/A)	E Coli (P/A)	Lab Sample Number of Original Sample (Required for Repeat and/or Replacement Samples) (See Instructions)
RT			003		0900	1.16	1.53	A68559	1250		A		

The signatories of this form certify by their signatures that collection and analysis of the water sample analyzed and the resulting data hereby submitted, were completed in accordance with the provisions of 401 KAR Chapter 8, specifically including but not limited to 401 KAR 8:200, Section 1 and 401 KAR 8:040; and that the data submitted on this form is a true and accurate report of the results of collection and analysis performed pursuant to the above-referenced regulations. Violations of 401 KAR Chapter 8 are subject to severe penalties prescribed in KRS 224.99-010, up to $25,000 fine per day per violation and in some cases a violation may subject the violator to prison.

BACTERIOLOGICAL ANALYSIS REPORT FROM KEY

Sample Type:	RT = Routine (For Compliance)	RP = Repeat (For Compliance)	SP = Special (Not for Compliance)
Special Sample Reason: (Only If Sample Type = SP)	A = Suspected Contamination B = New Plant, Modification, or Line Extension	C = Treatment Modification D = Study/Investigation	E = Line Break, Emergency Repair
Repeat Location Code: (Only If Sample Type = RP)	DN = Downstream	UP = Upstream	OR = Original Site

McCoy & McCoy Laboratories, Inc.
www.mccoylabs.com

PO Box 907 * 825 Industrial Rd.
Madisonville, KY 42431
270.821.7375
270.825.9200 fax

2456 Fortune Dr., Suite 160
Lexington, KY 40509
859.299.7775
859.299.7785 fax

173 Island Creek Rd.
Pikeville, KY 41501
606.432.3104
606.432.3171 fax

1800 Kentucky Ave.
Paducah, KY 42003
270.444.6547
270.444.6572 fax

5510 Fern Valley Rd.
Suite 104 Promenade Pavilion
Louisville, KY 40228
502.961.0001

SHADED AREA FOR LAB USE ONLY

CHAIN OF CUSTODY and ANALYTICAL REQUEST

Please print legibly.

Client:	Bill To:	Send Results to:	Compliance Monitoring (check one)? Yes ☐ No ☐ / Samples Chlorinated (check one)? Yes ☐ No ☐	PO#
CRWD # 1				
Phone/Email:	Phone/Email	Phone/Email:	PWS ID# / STATE	
Batch#	Project Name	Collected by (Signature): Bill	MMLI Quote # (if applicable)	

Sample ID#	COLLECTION DATE	COLLECTION TIME (24 hr)	SAMPLE DESCRIPTION Composite samples indicate begin time, end time and temp (°C) at end time	SAMPLE ANALYSIS REQUESTED Method ID if known (i.e. 8260B, 6010B/7470A...)	SAMPLE REMARKS (i.e. composite, grab, field readings, corrosive...)	Field Data pH S.U.	Field Data Temp °C	# OF CONTAINERS	MATRIX CODE (See Lower Left)	PRESERVATIVE CODE (See Lower Left)
	4-22-09	0730	003	RT						

1. Expedited services not available for all services, please call. 2. Samples received unannounced with less than 48 hours holding time remaining may be subject to additional surcharges. 3. Lab reserves the right to return unused portions of samples to client.

Relinquished by: (Signature)	Received By: (Signature)	DATE	TIME (24 hr)
William Duncan	Dark [signature]	4-22-09	0900
Relinquished by: (Signature)	Received by: (Signature)	DATE	TIME (24 hr)
Relinquished by: (Signature)	Received for MMLI by:	DATE	TIME (24 hr)

MATRIX CODES:
DW – Drinking Water
SW – Solid Waste
SO – Soil/Solid
SL – Sludge
GW – Ground Water
WW – Waste Water
OL – Oil
SU – Surface Water

PRESERVATIVE CODES:
NI – Nitric acid (HNO_3)
HA – Hydrochloric Acid (HCl)
SH – Sodium Hydroxide (NaOH)
ST – Sodium Thiosulfate
ZN – Zinc acetate
SA – Sulfuric Acid (H_2SO_4)
4C – 4°C
AA – Ascorbic Acid
NO – No preservative
SS – Sodium sulfite

CONDITIONS UPON RECEIPT (CHECK ONE)
☐ Iced wet/Blue ____ °C Temp
☐ Ambient ____ °C Temp ☐ N/A

	YES	NO	N/A
Custody seals present/intact?	☐	☐	☐
Broken containers?	☐	☐	☐
COC agree with sample Labels?	☐	☐	☐
Correct containers for testing?	☐	☐	☐
Headspace issues acceptable?	☐	☐	☐
Holding time(s) acceptable?	☐	☐	☐
Preservative pH's acceptable?	☐	☐	☐
Was pH left unadjusted?	☐	☐	☐
All samples listed on COC received?	☐	☐	☐
Samples properly preserved?	☐	☐	☐
Client's sample documents received?	☐	☐	☐
COC been relinquished?	☐	☐	☐
Are tests listed for each sample?	☐	☐	☐

Method of Shipment (check one): US Postal ☐ UPS ☐ FedEx ☐ MMLI ☐ Client ☐
Date Shipped:
Airbill#:
Logged in by: ____ Location: ____
LAB NOTES: ____
Follow up action required: YES ☐ NO ☐
Client informed on: ____
Client Rep: ____
By: ____
Reviewed by: ____
Date: ____

SAMPLE CATEGORY = TC

KENTUCKY DIVISION OF WATER / DRINKING WATER BRANCH
BACTERIOLOGICAL ANALYSIS REPORT FORM

General Information -- This Section To Be Completed By Collector

PWS ID: KY0180609

Compliance Period (MMYYYY): 012009

PWS Name: CRWD # 2

PWS Contact: Bill

Collection Date (MMDDYYYY): 04/22/2009
(All Samples Reported on this Form were Collected on this Date.)

PWS Address: 69 Marguerite New Concord Ky 42076

PWS Phone: 270-436-6304

Collector Name: William Duncan 4-22-09
Signature/Date

General Information -- This Section To Be Completed By Lab

Lab ID: 8001

Lab Receipt Date (MMDDYYYY): 04/22/2009

Analysis Date (MMDDYYYY): 04/24/2009

Total Coliform Analysis Method Code: 09

E Coli Analysis Method Code:

Lab Analyst: Mindy Martin 4/23/09
Signature/Date

Lab Supervisor: 4/27/09
Signature/Date

Sample Information -- This Section To Be Completed By Collector / Analysis Information -- This Section To Be Completed By Lab

Sample Type (RT, RP, or SP) (See Key)	Special Sample Reason (A, B, C, D, or E) (See Key)	Replacement Sample? (Y or Blank)	Location Code (See Instructions)	Repeat Location Code (DN, UP, or OR) (See Key)	Sample Time (24 hr)	Free Chlorine (Required for all disinfectants except Chloramine)	Total Chlorine (Required when disinfectant is Chloramine)	Lab Sample Number	Analysis Time (24 hr)	Result (Total Coliform Count - or - TNTC - or - CNFG) (See Key)	Total Coliform (P/A)	E Coli (P/A)	Lab Sample Number of Original Sample (Required for Repeat and/or Replacement Samples) (See Instructions)
RT			003		0730	1.32	1.38	AG65560	1250		A		

The signatories of this form certify by their signatures that collection and analysis of the water sample analyzed and the resulting data hereby submitted, were completed in accordance with the provisions of 401 KAR Chapter 8, specifically including but not limited to 401 KAR 8:200, Section 1 and 401 KAR 8:040; and that the data submitted on this form is a true and accurate report of the results of collection and analysis performed pursuant to the above-referenced regulations. Violations of 401 KAR Chapter 8 are subject to severe penalties prescribed in KRS 224.99-010, up to $25,000 fine per day per violation and in some cases a violation may subject the violator to prison.

BACTERIOLOGICAL ANALYSIS REPORT FROM KEY

Sample Type:	RT = Routine (For Compliance)	RP = Repeat (For Compliance)	SP = Special (Not for Compliance)
Special Sample Reason: (Only if Sample Type = SP)	A = Suspected Contamination B = New Plant, Modification, or Line Extension	C = Treatment Modification D = Study/Investigation	E = Line Break, Emergency Repair
Repeat Location Code: (Only if Sample Type = RP)	DN = Downstream	UP = Upstream	OR = Original Site

McCoy & McCoy Laboratories, Inc.
www.mccoylabs.com

PO Box 907 * 825 Industrial Rd.
Madisonville, KY 42431
270.821.7375
270.825.9200 fax

2456 Fortune Dr., Suite 160
Lexington, KY 40509
859.299.7775
859.299.7785 fax

173 Island Creek Rd.
Pikeville, KY 41501
606.432.3104
606.432.3171 fax

1800 Kentucky Ave.
Paducah, KY 42003
270.444.6547
270.444.6572 fax

5510 Fern Valley Rd.
Suite 104 Promenade Pavilion
Louisville, KY 40228
502.961.0001

SHADED AREA FOR LAB USE ONLY

CHAIN OF CUSTODY and ANALYTICAL REQUEST

Please print legibly.

Client: CRWD#2

Phone/Email:

Bill To:

Phone/Email

Send Results to:

Phone/Email:

Compliance Monitoring (check one)? Yes ☐ No ☐

Samples Chlorinated (check one)? Yes ☐ No ☐

PO#

PWS ID#

STATE

Batch#

Project Name

Collected by (Signature): Rill

MMLI Quote # (if applicable)

Sample ID#	COLLECTION DATE	COLLECTION TIME (24 hr)	SAMPLE DESCRIPTION Composite samples indicate begin time, end time and temp (°C) at end time	SAMPLE ANALYSIS REQUESTED Method ID if known (i.e. 8260B, 6010B/7470A...)	SAMPLE REMARKS (i.e. composite, grab, field readings, corrosive...)	Field Data pH S.U.	Field Data Temp °C	# OF CONTAINERS	MATRIX CODE (See Lower Left)	PRESERVATIVE CODE (See Lower Left)
	4-22-09	0630	003	RT						

1. Expedited services not available for all services, please call. 2. Samples received unannounced with less than 48 hours holding time remaining may be subject to additional surcharges. 3. Lab reserves the right to return unused portions of samples to client.

Relinquished by: (Signature)	Received By: (Signature)	DATE	TIME (24 hr)
William Duncan	[signature]	4-22-09	0900
Relinquished by: (Signature)	Received by: (Signature)	DATE	TIME (24 hr)
Relinquished by: (Signature)	Received for MMLI by:	DATE	TIME (24 hr)

MATRIX CODES:
DW – Drinking Water
SW – Solid Waste
SO – Soil/Solid
SL – Sludge
GW – Ground Water
WW – Waste Water
OL – Oil
SU – Surface Water

PRESERVATIVE CODES:
NI – Nitric acid (HNO_3)
HA – Hydrochloric Acid (HCl)
SH – Sodium Hydroxide (NaOH)
ST – Sodium Thiosulfate
ZN – Zinc acetate
SA – Sulfuric Acid (H_2SO_4)
4C – 4°C
AA – Ascorbic Acid
NO – No preservative
SS – Sodium sulfite

CONDITIONS UPON RECEIPT (CHECK ONE)
☐ Iced wet/Blue ____ °C Temp
☐ Ambient ____ °C Temp ☐ N/A

	YES	NO	N/A
Custody seals present/intact?	☐	☐	☐
Broken containers?	☐	☐	☐
COC agree with sample Labels?	☐	☐	☐
Correct containers for testing?	☐	☐	☐
Headspace issues acceptable?	☐	☐	☐
Holding time(s) acceptable?	☐	☐	☐
Preservative pH's acceptable?	☐	☐	☐
Was pH left unadjusted?	☐	☐	☐
All samples listed on COC received?	☐	☐	☐
Samples properly preserved?	☐	☐	☐
Client's sample documents received?	☐	☐	☐
COC been relinquished?	☐	☐	☐
Are tests listed for each sample?	☐	☐	☐

Method of Shipment (check one): UPS ☐ FedEx ☐ MMLI ☐ US Postal ☐ Client ☐

Date Shipped:
Airbill#:

Logged in by: _____ Location: _____

LAB NOTES: _____

Follow up action required: YES ☐ NO ☐

Client informed on: _____

Client Rep: _____

By: _____

Reviewed by: _____

Date: _____

SAMPLE CATEGORY = TC

KENTUCKY DIVISION OF WATER / DRINKING WATER BRANCH
BACTERIOLOGICAL ANALYSIS REPORT FORM

General Information – This Section To Be Completed By Collector

PWS ID: KY0180509

PWS Name: CRWD # 3

PWS Contact: Bill

PWS Address: 69 Marguerite New Concord Ky 42076

PWS Phone: 270-436-6304

Compliance Period (MMYYYY): 042009

Collection Date (MMDDYYYY): 04232009
(All Samples Reported on this Form were Collected on this Date.)

Collector Name: William Duncan 4-23-09
Signature/Date

General Information – This Section To Be Completed By Lab

Lab ID: 00091

Lab Receipt Date (MMDDYYYY): 04242009

Analysis Date (MMDDYYYY): 04242009

Total Coliform Analysis Method Code: 978

E Coli Analysis Method Code:

Lab Analyst: Mindy Martin 4/23/09
Signature/Date

Lab Supervisor: 4/23/09
Signature/Date

Sample Information – This Section To Be Completed By Collector

Sample Type (RT, RP, or SP) (See Key)	Special Sample Reason (A, B, C, D, or E) (See Key)	Replacement Sample? (Y or Blank)	Location Code (See Instructions)	Repeat Location Code (DN, UP, or OR) (See Key)	Sample Time (24 hr)	Free Chlorine (Required for all disinfectants except Chloramine)	Total Chlorine (Required when disinfectant is Chloramine)
RT			003		0600	1.37	1.44
						.	.
						.	.
						.	.
						.	.
						.	.
						.	.
						.	.
						.	.
						.	.

Analysis Information – This Section To Be Completed By Lab

Lab Sample Number	Analysis Time (24 hr)	Result (Total Coliform Count - or - TNTC - or - CNFG) (See Key)	Total Coliform (P/A)	E Coli (P/A)	Lab Sample Number of Original Sample (Required for Repeat and/or Replacement Samples) (See Instructions)
HG6592	1250		A		

The signatories of this form certify by their signatures that collection and analysis of the water sample analyzed and the resulting data hereby submitted, were completed in accordance with the provisions of 401 KAR Chapter 8, specifically including but not limited to 401 KAR 8:200, Section 1 and 401 KAR 8:040; and that the data submitted on this form is a true and accurate report of the results of collection and analysis performed pursuant to the above-referenced regulations. Violations of 401 KAR Chapter 8 are subject to severe penalties prescribed in KRS 224.99-010, up to $25,000 fine per day per violation and in some cases a violation may subject the violator to prison.

BACTERIOLOGICAL ANALYSIS REPORT FROM KEY

Sample Type:	RT = Routine (For Compliance)	RP = Repeat (For Compliance)	SP = Special (Not for Compliance)
Special Sample Reason: (Only if Sample Type = SP)	A = Suspected Contamination B = New Plant, Modification, or Line Extension	C = Treatment Modification D = Study/Investigation	E = Line Break, Emergency Repair
Repeat Location Code: (Only if Sample Type = RP)	DN = Downstream	UP = Upstream	OR = Original Site

McCoy & McCoy Laboratories, Inc.
www.mccoylabs.com

PO Box 907 * 825 Industrial Rd.
Madisonville, KY 42431
270.821.7375
270.825.9200 fax

2456 Fortune Dr., Suite 160
Lexington, KY 40509
859.299.7775
859.299.7785 fax

173 Island Creek Rd.
Pikeville, KY 41501
606.432.3104
606.432.3171 fax

1800 Kentucky Ave.
Paducah, KY 42003
270.444.6547
270.444.6572 fax

5510 Fern Valley Rd.
Suite 104 Promenade Pavilion
Louisville, KY 40228
502.961.0001

SHADED AREA FOR LAB USE ONLY

CHAIN OF CUSTODY and ANALYTICAL REQUEST

Please print legibly.

Client:	Bill To:	Send Results to:	Compliance Monitoring (check one)? Yes ☐ No ☐ Samples Chlorinated (check one)? Yes ☐ No ☐	PO#
CRWD #3				
Phone/Email:	Phone/Email	Phone/Email:	PWS ID# / STATE	
Batch#	Project Name	Collected by (Signature): RJO	MMLI Quote # (if applicable)	

Sample ID#	COLLECTION DATE	COLLECTION TIME (24 hr)	SAMPLE DESCRIPTION Composite samples indicate begin time, end time and temp (°C) at end time	SAMPLE ANALYSIS REQUESTED Method ID if known (i.e. 8260B, 6010B/7470A...)	SAMPLE REMARKS (i.e. composite, grab, field readings, corrosive...)	Field Data pH S.U.	Field Data Temp °C	# OF CONTAINERS	MATRIX CODE (See Lower Left)	PRESERVATIVE CODE (See Lower Left)
	4-22-09	0600	003	RT						

1. Expedited services not available for all services, please call. 2. Samples received unannounced with less than 48 hours holding time remaining may be subject to additional surcharges. 3. Lab reserves the right to return unused portions of samples to client.

Relinquished by: (Signature)	Received By: (Signature)	DATE	TIME (24 hr)
William Duncan	Derek Pruitt	4-22-09	0900
Relinquished by: (Signature)	Received by: (Signature)	DATE	TIME (24 hr)
Relinquished by: (Signature)	Received for MMLI by:	DATE	TIME (24 hr)

CONDITIONS UPON RECEIPT (CHECK ONE)
☐ Iced wet/Blue C Temp
☐ Ambient C Temp ☐ N/A

	YES	NO	N/A
Custody seals present/intact?	☐	☐	☐
Broken containers?	☐	☐	☐
COC agree with sample Labels?	☐	☐	☐
Correct containers for testing?	☐	☐	☐
Headspace issues acceptable?	☐	☐	☐
Holding time(s) acceptable?	☐	☐	☐
Preservative pH's acceptable?	☐	☐	☐
Was pH left unadjusted?	☐	☐	☐
All samples listed on COC received?	☐	☐	☐
Samples properly preserved?	☐	☐	☐
Client's sample documents received?	☐	☐	☐
COC been relinquished?	☐	☐	☐
Are tests listed for each sample?	☐	☐	☐

Method of Shipment (check one): US Postal ☐ UPS ☐ FedEx ☐ MMLI ☐ Client ☐
Date Shipped:
Airbill #:
Logged in by: Location:
LAB NOTES
Follow/up action required: YES ☐ NO ☐
Client informed on:
Client Rep:
By:
Reviewed by:
Date:

MATRIX CODES:
DW – Drinking Water
SW – Solid Waste
SO – Soil/Solid
SL – Sludge
GW – Ground Water
WW – Waste Water
OL – Oil
SU – Surface Water

PRESERVATIVE CODES:
NI – Nitric acid (HNO_3)
HA – Hydrochloric Acid (HCl)
SH – Sodium Hydroxide (NaOH)
ST – Sodium Thiosulfate
ZN – Zinc acetate
SA – Sulfuric Acid (H_2SO_4)
4C – 4°C
AA – Ascorbic Acid
NO – No preservative
SS – Sodium sulfite

SAMPLE CATEGORY = TC

KENTUCKY DIVISION OF WATER / DRINKING WATER BRANCH
BACTERIOLOGICAL ANALYSIS REPORT FORM

General Information – This Section To Be Completed By Collector

PWS ID: KY0183106

PWS Name: CRWD # 4

PWS Contact: Bill

PWS Address: 69 Marguerite New Concord Ky 42076

PWS Phone: 270-436-6304

Compliance Period (MMYYYY): 042009

Collection Date (MMDDYYYY): 04222009
(All Samples Reported on this Form were Collected on this Date.)

Collector Name: William Duncan 4-22-09
Signature/Date

General Information – This Section To Be Completed By Lab

Lab ID: 40007

Lab Receipt Date (MMDDYYYY): 04222009

Analysis Date (MMDDYYYY): 04222009

Total Coliform Analysis Method Code: 000

E Coli Analysis Method Code:

Lab Analyst: Mindy Martin 4/23/09
Signature/Date

Lab Supervisor: [signature] 4/22/09
Signature/Date

Sample Information – This Section To Be Completed By Collector

Sample Type (RT, RP, or SP) (See Key)	Special Sample Reason (A, B, C, D, or E) (See Key)	Replacement Sample? (Y or Blank)	Location Code (See Instructions)	Repeat Location Code (DN, UP, or OR) (See Key)	Sample Time (24 hr)	Free Chlorine (Required for all disinfectants except Chloramine)	Total Chlorine (Required when disinfectant is Chloramine)
RT			013		0800	1.18	1.25
						.	.
						.	.
						.	.
						.	.
						.	.
						.	.
						.	.
						.	.
						.	.

Analysis Information – This Section To Be Completed By Lab

Lab Sample Number	Analysis Time (24 hr)	Result (Total Coliform Count - or - TNTC - or - CNFG) (See Key)	Total Coliform (P/A)	E Coli (P/A)	Lab Sample Number of Original Sample (Required for Repeat and/or Replacement Samples) (See Instructions)
AG65563	1230		A		

The signatories of this form certify by their signatures that collection and analysis of the water sample analyzed and the resulting data hereby submitted, were completed in accordance with the provisions of 401 KAR Chapter 8, specifically including but not limited to 401 KAR 8:200, Section 1 and 401 KAR 8:040; and that the data submitted on this form is a true and accurate report of the results of collection and analysis performed pursuant to the above-referenced regulations. Violations of 401 KAR Chapter 8 are subject to severe penalties prescribed in KRS 224.99-010, up to $25,000 fine per day per violation and in some cases a violation may subject the violator to prison.

BACTERIOLOGICAL ANALYSIS REPORT FROM KEY

Sample Type:	RT = Routine (For Compliance)	RP = Repeat (For Compliance)	SP = Special (Not for Compliance)
Special Sample Reason: (Only If Sample Type = SP)	A = Suspected Contamination B = New Plant, Modification, or Line Extension	C = Treatment Modification D = Study/Investigation	E = Line Break, Emergency Repair
Repeat Location Code:	DN = Downstream	UP = Upstream	OR = Original Site

McCoy & McCoy Laboratories, Inc.
www.mccoylabs.com

PO Box 907 * 825 Industrial Rd.
Madisonville, KY 42431
270.821.7375
270.825.9200 fax

2456 Fortune Dr., Suite 160
Lexington, KY 40509
859.299.7775
859.299.7785 fax

173 Island Creek Rd.
Pikeville, KY 41501
606.432.3104
606.432.3171 fax

1800 Kentucky Ave.
Paducah, KY 42003
270.444.6547
270.444.6572 fax

5510 Fern Valley Rd.
Suite 104 Promenade Pavilion
Louisville, KY 40228
502.961.0001

SHADED AREA FOR LAB USE ONLY

CHAIN OF CUSTODY and ANALYTICAL REQUEST

Please print legibly

Client: CRWD #4

Phone/Email:

Bill To:

Phone/Email

Send Results to:

Phone/Email:

Compliance Monitoring (check one)? Yes ☐ No ☐

Samples Chlorinated (check one)? Yes ☐ No ☐

PO#

PWS ID#

STATE

MMLI Quote # (if applicable)

Batch#

Project Name

Collected by (Signature): Bill

Sample ID#	COLLECTION DATE	COLLECTION TIME (24 hr)	SAMPLE DESCRIPTION Composite samples indicate begin time, end time and temp (°C) at end time	SAMPLE ANALYSIS REQUESTED Method ID if known (i.e. 8260B, 6010B/7470A...)	SAMPLE REMARKS (i.e. composite, grab, field readings, corrosive...)	Field Data pH S.U.	Field Data Temp °C	# OF CONTAINERS	MATRIX CODE (See Lower Left)	PRESERVATIVE CODE (See Lower Left)
	4-22-09	0800	013	RT						

1. Expedited services not available for all services, please call. 2. Samples received unannounced with less than 48 hours holding time remaining may be subject to additional surcharges. 3. Lab reserves the right to return unused portions of samples to client.

Relinquished by: (Signature)	Received By: (Signature)	DATE	TIME (24 hr)
William Duncan	[signature]	4-22-09	0900
Relinquished by: (Signature)	Received by: (Signature)	DATE	TIME (24 hr)
Relinquished by: (Signature)	Received for MMLI by:	DATE	TIME (24 hr)

MATRIX CODES:
DW – Drinking Water
SW – Solid Waste
SO – Soil/Solid
SL – Sludge
GW – Ground Water
WW – Waste Water
OL – Oil
SU – Surface Water

PRESERVATIVE CODES:
NI – Nitric acid (HNO_3)
HA – Hydrochloric Acid (HCl)
SH – Sodium Hydroxide (NaOH)
ST – Sodium Thiosulfate
ZN – Zinc acetate
SA – Sulfuric Acid (H_2SO_4)
4C – 4°C
AA – Ascorbic Acid
NO – No preservative
SS – Sodium sulfite

CONDITIONS UPON RECEIPT (CHECK ONE)
☐ Iced wet/Blue °C Temp
☐ Ambient °C Temp ☐ N/A

	YES	NO	N/A
Custody seals present/intact?	☐	☐	☐
Broken containers?	☐	☐	☐
COC agree with sample Labels?	☐	☐	☐
Correct containers for testing?	☐	☐	☐
Headspace issues acceptable?	☐	☐	☐
Holding time(s) acceptable?	☐	☐	☐
Preservative pH's acceptable?	☐	☐	☐
Was pH left unadjusted?	☐	☐	☐
All samples listed on COC received?	☐	☐	☐
Samples properly preserved?	☐	☐	☐
Client's sample documents received?	☐	☐	☐
COC been relinquished?	☐	☐	☐
Are tests listed for each sample?	☐	☐	☐

Method of Shipment (check one): UPS ☐ FedEx ☐ MMLI ☐ US Postal ☐ Client ☐

Date Shipped:
Airbill#:
Logged in by: Location:
LAB NOTES:
Follow up action required: YES ☐ NO ☐
Client informed on: / /
Client Rep:
By:
Reviewed by:
Date: / /

SAMPLE CATEGORY = TC

KENTUCKY DIVISION OF WATER / DRINKING WATER BRANCH
BACTERIOLOGICAL ANALYSIS REPORT FORM

General Information – This Section To Be Completed By Collector

PWS ID: KY0180549

Compliance Period (MMYYYY): 042009

PWS Name: CRWD # 1

PWS Contact: Bill

Collection Date (MMDDYYYY): 04292009
(All Samples Reported on this Form were Collected on this Date.)

PWS Address: 69 Marguerite New Concord Ky 42076

PWS Phone: 270-436-6304

Collector Name: William Duncan 4-29-09
Signature/Date

General Information – This Section To Be Completed By Lab

Lab ID: 0000 7

Lab Receipt Date (MMDDYYYY): 04292009

Total Coliform Analysis Method Code: 028

Analysis Date (MMDDYYYY): 04292009

E Coli Analysis Method Code:

Lab Analyst: Mindy Marton 4/30/09
Signature/Date

Lab Supervisor: [illegible] 4/30/09
Signature/Date

Sample Information – This Section To Be Completed By Collector

Sample Type (RT, RP, or SP) (See Key)	Special Sample Reason (A, B, C, D, or E) (See Key)	Replacement Sample? (Y or Blank)	Location Code (See Instructions)	Repeat Location Code (DN, UP, or OR) (See Key)	Sample Time (24 hr)	Free Chlorine (Required for all disinfectants except Chloramine)	Total Chlorine (Required when disinfectant is Chloramine)
RT			004		0930	1.03	1.09
						.	.
						.	.
						.	.
						.	.
						.	.
						.	.
						.	.
						.	.
						.	.

Analysis Information – This Section To Be Completed By Lab

Lab Sample Number	Analysis Time (24 hr)	Result (Total Coliform Count - or - TNTC - or - CNFG) (See Key)	Total Coliform (P/A)	E Coli (P/A)	Lab Sample Number of Original Sample (Required for Repeat and/or Replacement Samples) (See Instructions)
AG66825	123C		A		

The signatories of this form certify by their signatures that collection and analysis of the water sample analyzed and the resulting data hereby submitted, were completed in accordance with the provisions of 401 KAR Chapter 8, specifically including but not limited to 401 KAR 8:200, Section 1 and 401 KAR 8:040; and that the data submitted on this form is a true and accurate report of the results of collection and analysis performed pursuant to the above-referenced regulations. Violations of 401 KAR Chapter 8 are subject to severe penalties prescribed in KRS 224.99-010, up to $25,000 fine per day per violation and in some cases a violation may subject the violator to prison.

BACTERIOLOGICAL ANALYSIS REPORT FROM KEY

Sample Type:	RT = Routine (For Compliance)	RP = Repeat (For Compliance)	SP = Special (Not for Compliance)
Special Sample Reason: (Only If Sample Type = SP)	A = Suspected Contamination B = New Plant, Modification, or Line Extension	C = Treatment Modification D = Study/Investigation	E = Line Break, Emergency Repair
Repeat Location Code: (Only If Sample Type = RP)	DN = Downstream	UP = Upstream	OR = Original Site

McCoy & McCoy Laboratories, Inc.
www.mccoylabs.com

PO Box 907 * 825 Industrial Rd.
Madisonville, KY 42431
270.821.7375
270.825.9200 fax

2456 Fortune Dr., Suite 160
Lexington, KY 40509
859.299.7775
859.299.7785 fax

173 Island Creek Rd.
Pikeville, KY 41501
606.432.3104
606.432.3171 fax

1800 Kentucky Ave.
Paducah, KY 42003
270.444.6547
270.444.6572 fax

5510 Fern Valley Rd.
Suite 104 Promenade Pavilion
Louisville, KY 40228
502.961.0001

SHADED AREA FOR LAB USE ONLY

CHAIN OF CUSTODY and ANALYTICAL REQUEST

Please print legibly

Client: CRWD #1	Bill To:	Send Results to:	Compliance Monitoring (check one)? Yes ☐ No ☐ Samples Chlorinated (check one)? Yes ☐ No ☐	PO#
Phone/Email:	Phone/Email	Phone/Email:	PWS ID# / STATE	
Batch#	Project Name	Collected by (Signature): Bob	MMLI Quote # (if applicable)	

Sample ID#	COLLECTION DATE	COLLECTION TIME (24 hr)	SAMPLE DESCRIPTION Composite samples indicate begin time, end time and temp (°C) at end time	SAMPLE ANALYSIS REQUESTED Method ID if known (i.e. 8260B, 6010B/7470A...)	SAMPLE REMARKS (i.e. composite, grab, field readings, corrosive...)	Field Data pH S.U.	Field Data Temp °C	# OF CONTAINERS	MATRIX CODE (See Lower Left)	PRESERVATIVE CODE (See Lower Left)
	4-25-09	0730	004	RT						

1. Expedited services not available for all services, please call. 2. Samples received unannounced with less than 48 hours holding time remaining may be subject to additional surcharges. 3. Lab reserves the right to return unused portions of samples to client.

Relinquished by: (Signature)	Received By: (Signature)	DATE	TIME (24 hr)
[illegible]	[illegible]	4-25-09	0700
Relinquished by: (Signature)	Received by: (Signature)	4/25/09	
Relinquished by: (Signature)	Received for MMLI by:		

CONDITIONS UPON RECEIPT (CHECK ONE)
☐ Iced wet/Blue °C Temp
☐ Ambient °C Temp ☐ N/A

	YES	NO	N/A
Custody seals present/intact?	☐	☐	☐
Broken containers?	☐	☐	☐
COC agree with sample Labels?	☐	☐	☐
Correct containers for testing?	☐	☐	☐
Headspace issues acceptable?	☐	☐	☐
Holding time(s) acceptable?	☐	☐	☐
Preservative pH's acceptable?	☐	☐	☐
Was pH left unadjusted?	☐	☐	☐
All samples listed on COC received?	☐	☐	☐
Samples properly preserved?	☐	☐	☐
Client's sample documents received?	☐	☐	☐
COC been relinquished?	☐	☐	☐
Are tests listed for each sample?	☐	☐	☐

Method of Shipment (check one): UPS ☐ FedEx ☐ MMLI ☐ US Postal ☐ Client ☐
Date Shipped
Airbill #
Logged in by: Location
LAB NOTES
Follow up action required YES ☐ NO ☐
Client informed on:
Client Rep:
By:
Reviewed by:
Date

MATRIX CODES:
DW – Drinking Water
SW – Solid Waste
SO – Soil/Solid
SL – Sludge
GW – Ground Water
WW – Waste Water
OL – Oil
SU – Surface Water

PRESERVATIVE CODES:
NI – Nitric acid (HNO_3)
HA – Hydrochloric Acid (HCl)
SH – Sodium Hydroxide (NaOH)
ST – Sodium Thiosulfate
ZN – Zinc acetate
SA – Sulfuric Acid (H_2SO_4)
4C – 4°C
AA – Ascorbic Acid
NO – No preservative
SS – Sodium sulfite

SAMPLE CATEGORY = TC

KENTUCKY DIVISION OF WATER / DRINKING WATER BRANCH
BACTERIOLOGICAL ANALYSIS REPORT FORM

General Information – This Section To Be Completed By Collector

PWS ID: KY0180509

PWS Name: CRWD #2

PWS Contact: Bill

PWS Address: 69 Marguerite Rd Concord Ky 42076

PWS Phone: 270-436-6304

Compliance Period (MMYYYY): 042009

Collection Date (MMDDYYYY): 04292009
(All Samples Reported on this Form were Collected on this Date.)

Collector Name: William Duncan 4-29-09
Signature/Date

General Information – This Section To Be Completed By Lab

Lab ID: 00001

Lab Receipt Date (MMDDYYYY): 04282009

Analysis Date (MMDDYYYY): 04282009

Total Coliform Analysis Method Code: 278

E Coli Analysis Method Code:

Lab Analyst: Mindy Martin 4/30/09
Signature/Date

Lab Supervisor: [signature] 4/30/09
Signature/Date

Sample Information – This Section To Be Completed By Collector

Sample Type (RT, RP, or SP) (See Key)	Special Sample Reason (A, B, C, D, or E) (See Key)	Replacement Sample? (Y or Blank)	Location Code (See Instructions)	Repeat Location Code (DN, UP, or OR) (See Key)	Sample Time (24 hr)	Free Chlorine (Required for all disinfectants except Chloramine)	Total Chlorine (Required when disinfectant is Chloramine)
RT			004		0630	1.18	1.18

Analysis Information – This Section To Be Completed By Lab

Lab Sample Number	Analysis Time (24 hr)	Result (Total Coliform Count - or - TNTC - or - CNFG) (See Key)	Total Coliform (P/A)	E Coli (P/A)	Lab Sample Number of Original Sample (Required for Repeat and/or Replacement Samples) (See Instructions)
AG66826	1230		A		

The signatories of this form certify by their signatures that collection and analysis of the water sample analyzed and the resulting data hereby submitted, were completed in accordance with the provisions of 401 KAR Chapter 8, specifically including but not limited to 401 KAR 8:200, Section 1 and 401 KAR 8:040; and that the data submitted on this form is a true and accurate report of the results of collection and analysis performed pursuant to the above-referenced regulations. Violations of 401 KAR Chapter 8 are subject to severe penalties prescribed in KRS 224.99-010, up to $25,000 fine per day per violation and in some cases a violation may subject the violator to prison.

BACTERIOLOGICAL ANALYSIS REPORT FROM KEY

Sample Type:	RT = Routine (For Compliance)	RP = Repeat (For Compliance)	SP = Special (Not for Compliance)
Special Sample Reason: (Only if Sample Type = SP)	A = Suspected Contamination B = New Plant, Modification, or Line Extension	C = Treatment Modification D = Study/Investigation	E = Line Break, Emergency Repair
Repeat Location Code: (Only if Sample Type = RP)	DN = Downstream	UP = Upstream	OR = Original Site

McCoy & McCoy Laboratories, Inc.
www.mccoylabs.com

PO Box 907 * 825 Industrial Rd.
Madisonville, KY 42431
270.821.7375
270.825.9200 fax

2456 Fortune Dr., Suite 160
Lexington, KY 40509
859.299.7775
859.299.7785 fax

173 Island Creek Rd.
Pikeville, KY 41501
606.432.3104
606.432.3171 fax

1800 Kentucky Ave.
Paducah, KY 42003
270.444.6547
270.444.6572 fax

5510 Fern Valley Rd.
Suite 104 Promenade Pavilion
Louisville, KY 40228
502.961.0001

SHADED AREA FOR LAB USE ONLY

CHAIN OF CUSTODY and ANALYTICAL REQUEST

Please print legibly.

Client: CRWD #2

Phone/Email:

Bill To:

Phone/Email

Send Results to:

Phone/Email:

Compliance Monitoring (check one)? Yes ☐ No ☐

Samples Chlorinated (check one)? Yes ☐ No ☐

PO#

PWS ID#

STATE

Batch#

Project Name

Collected by (Signature): BJS

MMLI Quote # (if applicable)

Sample ID#	COLLECTION DATE	COLLECTION TIME (24 hr)	SAMPLE DESCRIPTION Composite samples indicate begin time, end time and temp (°C) at end time	SAMPLE ANALYSIS REQUESTED Method ID if known (i.e. 8260B, 6010B/7470A...)	SAMPLE REMARKS (i.e. composite, grab, field readings, corrosive...)	Field Data pH S.U.	Field Data Temp °C	# OF CONTAINERS	MATRIX CODE (See Lower Left)	PRESERVATIVE CODE (See Lower Left)
	4-29-09	0630	004	RT						

1. Expedited services not available for all services, please call. 2. Samples received unannounced with less than 48 hours holding time remaining may be subject to additional surcharges. 3. Lab reserves the right to return unused portions of samples to client.

		DATE	TIME (24 hr)
Relinquished by: (Signature)	Received By: (Signature)	4-29-09	0900
Relinquished by: (Signature)	Received by: (Signature)	4/29/09	
Relinquished by: (Signature)	Received for MMLI by:		

CONDITIONS UPON RECEIPT (CHECK ONE)
☐ Iced wet/Blue _____ °C Temp
☐ Ambient _____ °C Temp ☐ N/A

	YES	NO	N/A
Custody seals present/intact?	☐	☐	☐
Broken containers?	☐	☐	☐
COC agree with sample Labels?	☐	☐	☐
Correct containers for testing?	☐	☐	☐
Headspace issues acceptable?	☐	☐	☐
Holding time(s) acceptable?	☐	☐	☐
Preservative pH's acceptable?	☐	☐	☐
Was pH left unadjusted?	☐	☐	☐
All samples listed on COC received?	☐	☐	☐
Samples properly preserved?	☐	☐	☐
Client's sample documents received?	☐	☐	☐
COC been relinquished?	☐	☐	☐
Are tests listed for each sample?	☐	☐	☐

Method of Shipment (check one): UPS ☐ FedEx ☐ MMLI ☐ US Postal ☐ Client ☐

Date Shipped:

Airbill#:

Logged in by: Location:

LAB NOTES:

Follow up action required: YES ☐ NO ☐

Client informed on:

Client Rep:

By:

Reviewed by:

Date:

MATRIX CODES:
DW – Drinking Water
SW – Solid Waste
SO – Soil/Solid
SL – Sludge
GW – Ground Water
WW – Waste Water
OL – Oil
SU – Surface Water

PRESERVATIVE CODES:
NI – Nitric acid (HNO_3)
HA – Hydrochloric Acid (HCl)
SH – Sodium Hydroxide (NaOH)
ST – Sodium Thiosulfate
ZN – Zinc acetate
SA – Sulfuric Acid (H_2SO_4)
4C – 4°C
AA – Ascorbic Acid
NO – No preservative
SS – Sodium sulfite

SAMPLE CATEGORY = TC

KENTUCKY DIVISION OF WATER / DRINKING WATER BRANCH
BACTERIOLOGICAL ANALYSIS REPORT FORM

General Information – This Section To Be Completed By Collector

PWS ID: KY0180509

Compliance Period (MMYYYY): 042009

PWS Name: CRWD # 3

PWS Contact: Bill

Collection Date (MMDDYYYY): 04292009 (All Samples Reported on this Form were Collected on this Date.)

PWS Address: 69 Marguerite Rd New Concord Ky 42076

PWS Phone: 270-436-6304

Collector Name: William Duncan 4-29-09 (Signature/Date)

General Information – This Section To Be Completed By Lab

Lab ID: 00001

Lab Receipt Date (MMDDYYYY): 04282009

Total Coliform Analysis Method Code: 021

Analysis Date (MMDDYYYY): 04282009

E Coli Analysis Method Code:

Lab Analyst: Mindy Martin 4/30/09 (Signature/Date)

Lab Supervisor: 4/30/09 (Signature/Date)

Sample Information – This Section To Be Completed By Collector / Analysis Information – This Section To Be Completed By Lab

Sample Type (RT, RP, or SP) (See Key)	Special Sample Reason (A, B, C, D, or E) (See Key)	Replacement Sample? (Y or Blank)	Location Code (See Instructions)	Repeat Location Code (DN, UP, or OR) (See Key)	Sample Time (24 hr)	Free Chlorine (Required for all disinfectants except Chloramine)	Total Chlorine (Required when disinfectant is Chloramine)	Lab Sample Number	Analysis Time (24 hr)	Result (Total Coliform Count - or - TNTC - or - CNFG) (See Key)	Total Coliform (P/A)	E Coli (P/A)	Lab Sample Number of Original Sample (Required for Repeat and/or Replacement Samples) (See Instructions)
RT			004		0600	1.23	1.59	AG66827	1230		A		

The signatories of this form certify by their signatures that collection and analysis of the water sample analyzed and the resulting data hereby submitted, were completed in accordance with the provisions of 401 KAR Chapter 8, specifically including but not limited to 401 KAR 8:200, Section 1 and 401 KAR 8:040; and that the data submitted on this form is a true and accurate report of the results of collection and analysis performed pursuant to the above-referenced regulations. Violations of 401 KAR Chapter 8 are subject to severe penalties prescribed in KRS 224.99-010, up to $25,000 fine per day per violation and in some cases a violation may subject the violator to prison.

BACTERIOLOGICAL ANALYSIS REPORT FROM KEY

Sample Type:	RT = Routine (For Compliance)	RP = Repeat (For Compliance)	SP = Special (Not for Compliance)
Special Sample Reason: (Only If Sample Type = SP)	A = Suspected Contamination B = New Plant, Modification, or Line Extension	C = Treatment Modification D = Study/Investigation	E = Line Break, Emergency Repair
Repeat Location Code: (Only If Sample Type = RP)	DN = Downstream	UP = Upstream	OR = Original Site

McCoy & McCoy Laboratories, Inc.
www.mccoylabs.com

PO Box 907 * 825 Industrial Rd.
Madisonville, KY 42431
270.821.7375
270.825.9200 fax

2456 Fortune Dr., Suite 160
Lexington, KY 40509
859.299.7775
859.299.7785 fax

173 Island Creek Rd.
Pikeville, KY 41501
606.432.3104
606.432.3171 fax

1800 Kentucky Ave.
Paducah, KY 42003
270.444.6547
270.444.6572 fax

Suite 104 Promenade Pavilion
Louisville, KY 40228
502.961.0001

CHAIN OF CUSTODY and ANALYTICAL REQUEST

Please print legibly

SHADED AREA FOR LAB USE ONLY

Client: CRWD # 3	Bill To:	Send Results to:	Compliance Monitoring (check one)? Yes ☐ No ☐ Samples Chlorinated (check one)? Yes ☐ No ☐	PO#
Phone/Email:	Phone/Email	Phone/Email:	PWS ID# / STATE	
Batch#	Project Name	Collected by (Signature): BJC	MMLI Quote # (if applicable)	

Sample ID#	COLLECTION DATE	COLLECTION TIME (24 hr)	SAMPLE DESCRIPTION Composite samples indicate begin time, end time and temp (°C) at end time	SAMPLE ANALYSIS REQUESTED Method ID if known (i.e. 8260B, 6010B/7470A...)	SAMPLE REMARKS (i.e. composite, grab, field readings, corrosive...)	Field Data pH S.U.	Field Data Temp °C	# OF CONTAINERS	MATRIX CODE (See Lower Left)	PRESERVATIVE CODE (See Lower Left)
	4-29-09	0800	GO 4	RT						

1. Expedited services not available for all services, please call. 2. Samples received unannounced with less than 48 hours holding time remaining may be subject to additional surcharges. 3. Lab reserves the right to return unused portions of samples to client.

Relinquished by: (Signature)	Received By: (Signature)	DATE	TIME (24 hr)
[signature]	[signature]	4-29-09	0900
Relinquished by: (Signature) [signature]	Received by: (Signature)	DATE 4/29/09	TIME (24 hr)
Relinquished by: (Signature)	Received for MMLI by:	DATE	TIME (24 hr)

CONDITIONS UPON RECEIPT (CHECK ONE)
☐ Iced wet/Blue C Temp
☐ Ambient C Temp ☐ N/A

	YES	NO	N/A
Custody seals present/intact?	☐	☐	☐
Broken containers?	☐	☐	☐
COC agree with sample Labels?	☐	☐	☐
Correct containers for testing?	☐	☐	☐
Headspace issues acceptable?	☐	☐	☐
Holding time(s) acceptable?	☐	☐	☐
Preservative pH's acceptable?	☐	☐	☐
Was pH left unadjusted?	☐	☐	☐
All samples listed on COC received?	☐	☐	☐
Samples properly preserved?	☐	☐	☐
Client's sample documents received?	☐	☐	☐
COC been relinquished?	☐	☐	☐
Are tests listed for each sample?	☐	☐	☐

Method of Shipment (check one): UPS ☐ FedEx ☐ MMLI ☐ US Postal ☐ Client ☐
Date Shipped:
Airbill#:
Logged in by: Location:
LAB NOTES:
Follow-up action required: YES ☐ NO ☐
Client information:
Client Rep.:
By:
Reviewed by:
Date:

MATRIX CODES:
DW – Drinking Water
SW – Solid Waste
SO – Soil/Solid
SL – Sludge
GW – Ground Water
WW – Waste Water
OL – Oil
SU – Surface Water

PRESERVATIVE CODES:
NI – Nitric acid (HNO_3)
HA – Hydrochloric Acid (HCl)
SH – Sodium Hydroxide (NaOH)
ST – Sodium Thiosulfate
ZN – Zinc acetate
SA – Sulfuric Acid (H_2SO_4)
4C – 4°C
AA – Ascorbic Acid
NO – No preservative
SS – Sodium sulfite

SAMPLE CATEGORY = TC

KENTUCKY DIVISION OF WATER / DRINKING WATER BRANCH
BACTERIOLOGICAL ANALYSIS REPORT FORM

General Information – This Section To Be Completed By Collector

PWS ID: KY0183106

PWS Name: CRWD # 4

PWS Contact: Bill

PWS Address: 69 Marguerite New Concord Ky 42076

PWS Phone: 270-436-6304

Compliance Period (MMYYYY): 042009

Collection Date (MMDDYYYY): 042920 09
(All Samples Reported on this Form were Collected on this Date.)

Collector Name: William Duncan 4-29-09
Signature/Date

General Information – This Section To Be Completed By Lab

Lab ID: 00031

Lab Receipt Date (MMDDYYYY): 042920 09

Analysis Date (MMDDYYYY): 04 30 2009

Total Coliform Analysis Method Code: 928

E Coli Analysis Method Code:

Lab Analyst: Mandy Martin 4/30/09
Signature/Date

Lab Supervisor: [signature] 4/30/09
Signature/Date

Sample Information – This Section To Be Completed By Collector

Sample Type (RT, RP, or SP) (See Key)	Special Sample Reason (A, B, C, D, or E) (See Key)	Replacement Sample? (Y or Blank)	Location Code (See Instructions)	Repeat Location Code (DN, UP, or OR) (See Key)	Sample Time (24 hr)	Free Chlorine (Required for all disinfectants except Chloramine)	Total Chlorine (Required when disinfectant is Chloramine)
RT			014		0800	1.41	1.49
						.	.
						.	.
						.	.
						.	.
						.	.
						.	.
						.	.
						.	.
						.	.

Analysis Information – This Section To Be Completed By Lab

Lab Sample Number	Analysis Time (24 hr)	Result (Total Coliform Count - or - TNTC - or - CNFG) (See Key)	Total Coliform (P/A)	E Coli (P/A)	Lab Sample Number of Original Sample (Required for Repeat and/or Replacement Samples) (See Instructions)
A66858	1230		A		

The signatories of this form certify by their signatures that collection and analysis of the water sample analyzed and the resulting data hereby submitted, were completed in accordance with the provisions of 401 KAR Chapter 8, specifically including but not limited to 401 KAR 8:200, Section 1 and 401 KAR 8:040; and that the data submitted on this form is a true and accurate report of the results of collection and analysis performed pursuant to the above-referenced regulations. Violations of 401 KAR Chapter 8 are subject to severe penalties prescribed in KRS 224.99-010, up to $25,000 fine per day per violation and in some cases a violation may subject the violator to prison.

BACTERIOLOGICAL ANALYSIS REPORT FROM KEY

Sample Type:	RT = Routine (For Compliance)	RP = Repeat (For Compliance)	SP = Special (Not for Compliance)
Special Sample Reason: (Only if Sample Type = SP)	A = Suspected Contamination B = New Plant, Modification, or Line Extension	C = Treatment Modification D = Study/Investigation	E = Line Break, Emergency Repair
Repeat Location Code:	DN = Downstream	UP = Upstream	OR = Original Site

McCoy & McCoy Laboratories, Inc.
www.mccoylabs.com

PO Box 907 * 825 Industrial Rd.
Madisonville, KY 42431
270.821.7375
270.825.9200 fax

2456 Fortune Dr., Suite 160
Lexington, KY 40509
859.299.7775
859.299.7785 fax

173 Island Creek Rd.
Pikeville, KY 41501
606.432.3104
606.432.3171 fax

1800 Kentucky Ave.
Paducah, KY 42003
270.444.6547
270.444.6572 fax

5510 Fern Valley Rd.
Suite 104 Promenade Pavilion
Louisville, KY 40228
502.961.0001

CHAIN OF CUSTODY and ANALYTICAL REQUEST

Please print legibly

SHADED AREA FOR LAB USE ONLY

Client: CRWD #4

Phone/Email:

Bill To:

Phone/Email

Send Results to:

Phone/Email:

Compliance Monitoring (check one)? Yes ☐ No ☐

Samples Chlorinated (check one)? Yes ☐ No ☐

PO#

PWS ID#

STATE

MMLI Quote # (if applicable)

Batch#

Project Name

Collected by (Signature): Bill

Sample ID#	COLLECTION DATE	COLLECTION TIME (24 hr)	SAMPLE DESCRIPTION Composite samples indicate begin time, end time and temp (°C) at end time	SAMPLE ANALYSIS REQUESTED Method ID if known (i.e. 8260B, 6010B/7470A...)	SAMPLE REMARKS (i.e. composite, grab, field readings, corrosive...)	Field Data pH S.U.	Field Data Temp °C	# OF CONTAINERS	MATRIX CODE (See Lower Left)	PRESERVATIVE CODE (See Lower Left)
	4-29-09	0900	1014	RT						

1. Expedited services not available for all services, please call. 2. Samples received unannounced with less than 48 hours holding time remaining may be subject to additional surcharges. 3. Lab reserves the right to return unused portions of samples to client.

Relinquished by: (Signature)	Received By: (Signature)	DATE	TIME (24 hr)
[signature]	[signature]	4-29-09	0900
Relinquished by: (Signature)	Received by: (Signature)	DATE	TIME (24 hr)
[signature]		4/29/09	
Relinquished by: (Signature)	Received for MMLI by:	DATE	TIME (24 hr)

CONDITIONS UPON RECEIPT (CHECK ONE)
☐ Iced wet/Blue C Temp
☐ Ambient C Temp ☐ N/A

	YES	NO	N/A
Custody seals present/intact?	☐	☐	☐
Broken containers?	☐	☐	☐
COC agree with sample Labels?	☐	☐	☐
Correct containers for testing?	☐	☐	☐
Headspace issues acceptable?	☐	☐	☐
Holding time(s) acceptable?	☐	☐	☐
Preservative pH's acceptable?	☐	☐	☐
Was pH left unadjusted?	☐	☐	☐
All samples listed on COC received?	☐	☐	☐
Samples properly preserved?	☐	☐	☐
Client's sample documents received?	☐	☐	☐
COC been relinquished?	☐	☐	☐
Are tests listed for each sample?	☐	☐	☐

Method of Shipment (check one): UPS ☐ FedEx ☐ MMLI ☐ US Postal ☐ Client ☐

Date Shipped:
Airbill#:

Logged in by: Location:

LAB NOTES:

Follow up action required: YES ☐ NO ☐

Client informed on:

Client Rep:

By:

Reviewed by:

Date:

MATRIX CODES:
DW – Drinking Water
SW – Solid Waste
SO – Soil/Solid
SL – Sludge
GW – Ground Water
WW – Waste Water
OL – Oil
SU – Surface Water

PRESERVATIVE CODES:
NI – Nitric acid (HNO_3)
HA – Hydrochloric Acid (HCl)
SH – Sodium Hydroxide (NaOH)
ST – Sodium Thiosulfate
ZN – Zinc acetate
SA – Sulfuric Acid (H_2SO_4)
4C – 4°C
AA – Ascorbic Acid
NO – No preservative
SS – Sodium sulfite

SAMPLE CATEGORY = TC

KENTUCKY DIVISION OF WATER / DRINKING WATER BRANCH
BACTERIOLOGICAL ANALYSIS REPORT FORM

General Information – This Section To Be Completed By Collector

PWS ID: KY0180649

Compliance Period (MMYYYY): 052009

PWS Name: CRWD # 1

PWS Contact: Bill

Collection Date (MMDDYYYY): 12/02/2009
(All Samples Reported on this Form were Collected on this Date.)

PWS Address: 69 Marguerite New Concord Ky 42076

PWS Phone: 270-436-6304

Collector Name: William Duncan 5-26-09
Signature/Date

General Information – This Section To Be Completed By Lab

Lab ID: 00001

Lab Receipt Date (MMDDYYYY): 05/20/2009

Total Coliform Analysis Method Code: 921

Analysis Date (MMDDYYYY): 05/20/2009

E Coli Analysis Method Code:

Lab Analyst: Mundy Martin 5/21/09
Signature/Date

Lab Supervisor: 5/21/09
Signature/Date

Sample Information – This Section To Be Completed By Collector

Sample Type (RT, RP, or SP) (See Key)	Special Sample Reason (A, B, C, D, or E) (See Key)	Replacement Sample? (Y or Blank)	Location Code (See Instructions)	Repeat Location Code (DN, UP, or OR) (See Key)	Sample Time (24 hr)	Free Chlorine (Required for all disinfectants except Chloramine)	Total Chlorine (Required when disinfectant is Chloramine)
RT			005		0920	1.31	1.38
						.	.
						.	.
						.	.
						.	.
						.	.
						.	.
						.	.
						.	.
						.	.

Analysis Information – This Section To Be Completed By Lab

Lab Sample Number	Analysis Time (24 hr)	Result (Total Coliform Count - or - TNTC - or - CNFG) (See Key)	Total Coliform (P/A)	E Coli (P/A)	Lab Sample Number of Original Sample (Required for Repeat and/or Replacement Samples) (See Instructions)
A57155	1400		A		

The signatories of this form certify by their signatures that collection and analysis of the water sample analyzed and the resulting data hereby submitted, were completed in accordance with the provisions of 401 KAR Chapter 8, specifically including but not limited to 401 KAR 8:200, Section 1 and 401 KAR 8:040; and that the data submitted on this form is a true and accurate report of the results of collection and analysis performed pursuant to the above-referenced regulations. Violations of 401 KAR Chapter 8 are subject to severe penalties prescribed in KRS 224.99-010, up to $25,000 fine per day per violation and in some cases a violation may subject the violator to prison.

BACTERIOLOGICAL ANALYSIS REPORT FROM KEY

Sample Type:	RT = Routine (For Compliance)	RP = Repeat (For Compliance)	SP = Special (Not for Compliance)
Special Sample Reason: (Only If Sample Type = SP)	A = Suspected Contamination B = New Plant, Modification, or Line Extension	C = Treatment Modification D = Study/Investigation	E = Line Break, Emergency Repair
Repeat Location Code: (Only If Sample Type = RP)	DN = Downstream	UP = Upstream	OR = Original Site

McCoy & McCoy Laboratories, Inc.
www.mccoylabs.com

PO Box 907 * 825 Industrial Rd.
Madisonville, KY 42431
270.821.7375
270.825.9200 fax

2456 Fortune Dr., Suite 160
Lexington, KY 40509
859.299.7775
859.299.7785 fax

173 Island Creek Rd.
Pikeville, KY 41501
606.432.3104
606.432.3171 fax

1800 Kentucky Ave.
Paducah, KY 42003
270.444.6547
270.444.6572 fax

5510 Fern Valley Rd.
Suite 104 Promenade Pavilion
Louisville, KY 40228
502.961.0001

CHAIN OF CUSTODY and ANALYTICAL REQUEST

SHADED AREA FOR LAB USE ONLY

Please print legibly.

Client:	Bill To:	Send Results to:	Compliance Monitoring (check one)? Yes ☐ No ☐ Samples Chlorinated (check one)? Yes ☐ No ☐	PO#
SRWD #1				
Phone/Email:	Phone/Email	Phone/Email:	PWS ID# / STATE	
Batch#	Project Name	Collected by (Signature): B.W	MMLI Quote # (if applicable)	

Sample ID#	COLLECTION DATE	COLLECTION TIME (24 hr)	SAMPLE DESCRIPTION Composite samples indicate begin time, end time and temp (°C) at end time	SAMPLE ANALYSIS REQUESTED Method ID if known (i.e. 8260B, 6010B/7470A...)	SAMPLE REMARKS (i.e. composite, grab, field readings, corrosive...)	Field Data pH S.U.	Field Data Temp °C	# OF CONTAINERS	MATRIX CODE (See Lower Left)	PRESERVATIVE CODE (See Lower Left)
	5-20-09	0730	0.5	RT						

1. Expedited services not available for all services, please call. 2. Samples received unannounced with less than 48 hours holding time remaining may be subject to additional surcharges. 3. Lab reserves the right to return unused portions of samples to client.

Relinquished by: (Signature)	Received By: (Signature)	DATE	TIME (24 hr)
[illegible]	[illegible]	5-20-09	0900
Relinquished by: (Signature)	Received by: (Signature)	DATE	TIME (24 hr)
Relinquished by: (Signature)	Received for MMLI by:	DATE	TIME (24 hr)

MATRIX CODES:
DW – Drinking Water; GW – Ground Water; SW – Solid Waste; WW – Waste Water; SO – Soil/Solid; OL – Oil; SL – Sludge; SU – Surface Water

PRESERVATIVE CODES:
NI – Nitric acid (HNO_3); HA – Hydrochloric Acid (HCl); SH – Sodium Hydroxide (NaOH); ST – Sodium Thiosulfate; ZN – Zinc acetate; SA – Sulfuric Acid (H_2SO_4); 4C – 4°C; AA – Ascorbic Acid; NO – No preservative; SS – Sodium sulfite

CONDITIONS UPON RECEIPT (CHECK ONE)
☐ Iced wet/Blue ____ °C Temp
☐ Ambient ____ °C Temp ☐ N/A

	YES	NO	N/A
Custody seals present/intact?	☐	☐	☐
Broken containers?	☐	☐	☐
COC agree with sample Labels?	☐	☐	☐
Correct containers for testing?	☐	☐	☐
Headspace issues acceptable?	☐	☐	☐
Holding time(s) acceptable?	☐	☐	☐
Preservative pH's acceptable?	☐	☐	☐
Was pH left unadjusted?	☐	☐	☐
All samples listed on COC received?	☐	☐	☐
Samples properly preserved?	☐	☐	☐
Client's sample documents received?	☐	☐	☐
COC been relinquished?	☐	☐	☐
Are tests listed for each sample?	☐	☐	☐

Method of Shipment (check one): US Postal ☐ UPS ☐ FedEx ☐ MMLI ☐ Client ☐
Date Shipped:
Airbill #:
Logged in by: Location:
LAB NOTES
Follow up action required: YES ☐ NO ☐
Client informed on:
Client Rep.:
By:
Reviewed by:
Date:

SAMPLE CATEGORY = TC

KENTUCKY DIVISION OF WATER / DRINKING WATER BRANCH
BACTERIOLOGICAL ANALYSIS REPORT FORM

General Information – This Section To Be Completed By Collector

PWS ID: KY0180565

Compliance Period (MMYYYY): 052009

PWS Name: CRWD # 2

PWS Contact: Bill

Collection Date (MMDDYYYY): 05202009
(All Samples Reported on this Form were Collected on this Date.)

PWS Address: 69 Marguerite Rd Concord Ky 42061

PWS Phone: 270-436-6304

Collector Name: William Duncan 5-20-09
Signature/Date

General Information – This Section To Be Completed By Lab

Lab ID: 00031

Lab Receipt Date (MMDDYYYY): 05202009

Total Coliform Analysis Method Code: 028

Analysis Date (MMDDYYYY): 05202009

E Coli Analysis Method Code:

Lab Analyst: Mindy Martin 5/21/09
Signature/Date

Lab Supervisor: 5/21/09
Signature/Date

Sample Information – This Section To Be Completed By Collector

Sample Type (RT, RP, or SP) (See Key)	Special Sample Reason (A, B, C, D, or E) (See Key)	Replacement Sample? (Y or Blank)	Location Code (See Instructions)	Repeat Location Code (DN, UP, or OR) (See Key)	Sample Time (24 hr)	Free Chlorine (Required for all disinfectants except Chloramine)	Total Chlorine (Required when disinfectant is Chloramine)
RT			026		0130	1.91	1.31

Analysis Information – This Section To Be Completed By Lab

Lab Sample Number	Analysis Time (24 hr)	Result (Total Coliform Count - or - TNTC - or - CNFG) (See Key)	Total Coliform (P/A)	E Coli (P/A)	Lab Sample Number of Original Sample (Required for Repeat and/or Replacement Samples) (See Instructions)
AG71530	1400		A		

The signatories of this form certify by their signatures that collection and analysis of the water sample analyzed and the resulting data hereby submitted, were completed in accordance with the provisions of 401 KAR Chapter 8, specifically including but not limited to 401 KAR 8:200, Section 1 and 401 KAR 8:040; and that the data submitted on this form is a true and accurate report of the results of collection and analysis performed pursuant to the above-referenced regulations. Violations of 401 KAR Chapter 8 are subject to severe penalties prescribed in KRS 224.99-010, up to $25,000 fine per day per violation and in some cases a violation may subject the violator to prison.

BACTERIOLOGICAL ANALYSIS REPORT FROM KEY

Sample Type:	RT = Routine (For Compliance)	RP = Repeat (For Compliance)	SP = Special (Not for Compliance)
Special Sample Reason: (Only If Sample Type = SP)	A = Suspected Contamination B = New Plant, Modification, or Line Extension	C = Treatment Modification D = Study/Investigation	E = Line Break, Emergency Repair
Repeat Location Code: (Only If Sample Type = RP)	DN = Downstream	UP = Upstream	OR = Original Site

McCoy & McCoy Laboratories, Inc.
www.mccoylabs.com

PO Box 907 * 825 Industrial Rd.
Madisonville, KY 42431
270.821.7375
270.825.9200 fax

2456 Fortune Dr., Suite 160
Lexington, KY 40509
859.299.7775
859.299.7785 fax

173 Island Creek Rd.
Pikeville, KY 41501
606.432.3104
606.432.3171 fax

1800 Kentucky Ave.
Paducah, KY 42003
270.444.6547
270.444.6572 fax

5510 Fern Valley Rd.
Suite 104 Promenade Pavilion
Louisville, KY 40228
502.961.0001

SHADED AREA FOR LAB USE ONLY

CHAIN OF CUSTODY and ANALYTICAL REQUEST

Please print legibly.

Client:	Bill To:	Send Results to:	Compliance Monitoring (check one)? Yes ☐ No ☐	PO#
CKWDH 2			Samples Chlorinated (check one)? Yes ☐ No ☐	
Phone/Email:	Phone/Email	Phone/Email:	PWS ID# / STATE	
Batch#	Project Name	Collected by (Signature): [signature]	MMLI Quote # (if applicable)	

Sample ID#	COLLECTION DATE	COLLECTION TIME (24 hr)	SAMPLE DESCRIPTION Composite samples indicate begin time, end time and temp (°C) at end time	SAMPLE ANALYSIS REQUESTED Method ID if known (i.e. 8260B, 6010B/7470A...)	SAMPLE REMARKS (i.e. composite, grab, field readings, corrosive...)	Field Data pH S.U.	Field Data Temp °C	# OF CONTAINERS	MATRIX CODE (See Lower Left)	PRESERVATIVE CODE (See Lower Left)
	5-20-09	0630	005	RT						

1. Expedited services not available for all services, please call. 2. Samples received unannounced with less than 48 hours holding time remaining may be subject to additional surcharges. 3. Lab reserves the right to return unused portions of samples to client.

Relinquished by: (Signature)	Received By: (Signature)	DATE	TIME (24 hr)
[signature]	[signature]	5-20-09	0850
Relinquished by: (Signature)	Received by: (Signature)	DATE	TIME (24 hr)
Relinquished by: (Signature)	Received for MMLI by:	DATE	TIME (24 hr)

MATRIX CODES:
DW – Drinking Water
SW – Solid Waste
SO – Soil/Solid
SL – Sludge
GW – Ground Water
WW – Waste Water
OL – Oil
SU – Surface Water

PRESERVATIVE CODES:
NI – Nitric acid (HNO_3)
HA – Hydrochloric Acid (HCl)
SH – Sodium Hydroxide (NaOH)
ST – Sodium Thiosulfate
ZN – Zinc acetate
SA – Sulfuric Acid (H_2SO_4)
4C – 4°C
AA – Ascorbic Acid
NO – No preservative
SS – Sodium sulfite

CONDITIONS UPON RECEIPT (CHECK ONE)
☐ Iced wet/Blue °C Temp
☐ Ambient °C Temp ☐ N/A

	YES	NO	N/A
Custody seals present/intact?	☐	☐	☐
Broken containers?	☐	☐	☐
COC agree with sample Labels?	☐	☐	☐
Correct containers for testing?	☐	☐	☐
Headspace issues acceptable?	☐	☐	☐
Holding time(s) acceptable?	☐	☐	☐
Preservative pH's acceptable?	☐	☐	☐
Was pH left unadjusted?	☐	☐	☐
All samples listed on COC received?	☐	☐	☐
Samples properly preserved?	☐	☐	☐
Client's sample documents received?	☐	☐	☐
COC been relinquished?	☐	☐	☐
Are tests listed for each sample?	☐	☐	☐

Method of Shipment (check one): UPS ☐ FedEx ☐ MMLI ☐ US Postal ☐ Client ☐
Date Shipped:
Airbill#:
Logged in by: Location:
LAB NOTES:
Follow up action required: YES ☐ NO ☐
Client informed on:
Client Rep:
By:
Reviewed by:
Date:

SAMPLE CATEGORY = TC

KENTUCKY DIVISION OF WATER / DRINKING WATER BRANCH
BACTERIOLOGICAL ANALYSIS REPORT FORM

General Information – This Section To Be Completed By Collector

PWS ID: KY0180509

Compliance Period (MMYYYY): 052009

PWS Name: CRWD # 3

PWS Contact: Bill

Collection Date (MMDDYYYY): 05202009
(All Samples Reported on this Form were Collected on this Date.)

PWS Address: 69 Marguerite Nav Concord Ky 42076

PWS Phone: 270-436-6304

Collector Name: William Duncan 5-20-09
Signature/Date

General Information – This Section To Be Completed By Lab

Lab ID: 00031

Lab Receipt Date (MMDDYYYY): 05202009

Total Coliform Analysis Method Code: 028

Analysis Date (MMDDYYYY): 05202009

E Coli Analysis Method Code:

Lab Analyst: Mindy Martin 5/21/09
Signature/Date

Lab Supervisor: [signature] 5/21/09
Signature/Date

Sample Information – This Section To Be Completed By Collector

Sample Type (RT, RP, or SP) (See Key)	Special Sample Reason (A, B, C, D, or E) (See Key)	Replacement Sample? (Y or Blank)	Location Code (See Instructions)	Repeat Location Code (DN, UP, or OR) (See Key)	Sample Time (24 hr)	Free Chlorine (Required for all disinfectants except Chloramine)	Total Chlorine (Required when disinfectant is Chloramine)
RT			005		0600	1.37	1.43
						.	.
						.	.
						.	.
						.	.
						.	.
						.	.
						.	.
						.	.
						.	.

Analysis Information – This Section To Be Completed By Lab

Lab Sample Number	Analysis Time (24 hr)	Result (Total Coliform Count - or - TNTC - or - CNFG) (See Key)	Total Coliform (P/A)	E Coli (P/A)	Lab Sample Number of Original Sample (Required for Repeat and/or Replacement Samples) (See Instructions)
mmm 5/21/09					
AG712831	1400		A		

The signatories of this form certify by their signatures that collection and analysis of the water sample analyzed and the resulting data hereby submitted, were completed in accordance with the provisions of 401 KAR Chapter 8, specifically including but not limited to 401 KAR 8:200, Section 1 and 401 KAR 8:040; and that the data submitted on this form is a true and accurate report of the results of collection and analysis performed pursuant to the above-referenced regulations. Violations of 401 KAR Chapter 8 are subject to severe penalties prescribed in KRS 224.99-010, up to $25,000 fine per day per violation and in some cases a violation may subject the violator to prison.

BACTERIOLOGICAL ANALYSIS REPORT FROM KEY

Sample Type:	RT = Routine (For Compliance)	RP = Repeat (For Compliance)	SP = Special (Not for Compliance)
Special Sample Reason: (Only If Sample Type = SP)	A = Suspected Contamination B = New Plant, Modification, or Line Extension	C = Treatment Modification D = Study/Investigation	E = Line Break, Emergency Repair
Repeat Location Code: (Only If Sample Type = RP)	DN = Downstream	UP = Upstream	OR = Original Site

McCoy & McCoy Laboratories, Inc.
www.mccoylabs.com

PO Box 907 * 825 Industrial Rd.
Madisonville, KY 42431
270.821.7375
270.825.9200 fax

2456 Fortune Dr., Suite 160
Lexington, KY 40509
859.299.7775
859.299.7785 fax

173 Island Creek Rd.
Pikeville, KY 41501
606.432.3104
606.432.3171 fax

1800 Kentucky Ave.
Paducah, KY 42003
270.444.6547
270.444.6572 fax

5510 Fern Valley Rd.
Suite 104 Promenade Pavilion
Louisville, KY 40228
502.961.0001

SHADED AREA FOR LAB USE ONLY

CHAIN OF CUSTODY and ANALYTICAL REQUEST

Please print legibly

Client: CRWD #3

Phone/Email:

Bill To:

Phone/Email

Send Results to:

Phone/Email:

Compliance Monitoring (check one)? Yes ☐ No ☐

Samples Chlorinated (check one)? Yes ☐ No ☐

PO#

PWS ID#

STATE

Batch#

Project Name

Collected by (Signature): Bill

MMLI Quote # (if applicable)

Sample ID#	COLLECTION DATE	COLLECTION TIME (24 hr)	SAMPLE DESCRIPTION Composite samples indicate begin time, end time and temp (°C) at end time	SAMPLE ANALYSIS REQUESTED Method ID if known (i.e. 8260B, 6010B/7470A...)	SAMPLE REMARKS (i.e. composite, grab, field readings, corrosive...)	Field Data pH S.U.	Field Data Temp °C	# OF CONTAINERS	MATRIX CODE (See Lower Left)	PRESERVATIVE CODE (See Lower Left)
	5-20-09	0600	005	RT						

1. Expedited services not available for all services, please call. 2. Samples received unannounced with less than 48 hours holding time remaining may be subject to additional surcharges. 3. Lab reserves the right to return unused portions of samples to client.

Relinquished by: (Signature)	Received By: (Signature)	DATE	TIME (24 hr)
[signature]	[signature]	5-20-09	0900
Relinquished by: (Signature)	Received by: (Signature)	DATE	TIME (24 hr)
Relinquished by: (Signature)	Received for MMLI by:	DATE	TIME (24 hr)

MATRIX CODES:
DW – Drinking Water
SW – Solid Waste
SO – Soil/Solid
SL – Sludge
GW – Ground Water
WW – Waste Water
OL – Oil
SU – Surface Water

PRESERVATIVE CODES:
NI – Nitric acid (HNO_3)
HA – Hydrochloric Acid (HCl)
SH – Sodium Hydroxide (NaOH)
ST – Sodium Thiosulfate
ZN – Zinc acetate
SA – Sulfuric Acid (H_2SO_4)
4C – 4°C
AA – Ascorbic Acid
NO – No preservative
SS – Sodium sulfite

CONDITIONS UPON RECEIPT (CHECK ONE)
☐ Iced wet/Blue ____ °C Temp
☐ Ambient ____ °C Temp ☐ N/A

	YES	NO	N/A
Custody seals present/intact?	☐	☐	☐
Broken containers?	☐	☐	☐
COC agree with sample Labels?	☐	☐	☐
Correct containers for testing?	☐	☐	☐
Headspace issues acceptable?	☐	☐	☐
Holding time(s) acceptable?	☐	☐	☐
Preservative pH's acceptable?	☐	☐	☐
Was pH left unadjusted?	☐	☐	☐
All samples listed on COC received?	☐	☐	☐
Samples properly preserved?	☐	☐	☐
Client's sample documents received?	☐	☐	☐
COC been relinquished?	☐	☐	☐
Are tests listed for each sample?	☐	☐	☐

Method of Shipment (check one): US Postal ☐ UPS ☐ FedEx ☐ MMLI ☐ Client ☐

Date Shipped:
Airbill#:

Logged in by: ____ Location: ____

LAB NOTES ____

Follow up action required: YES ☐ NO ☐

Client informed on: ____

Client Rep: ____

By: ____

Reviewed by: ____

Date: ____

SAMPLE CATEGORY = TC

KENTUCKY DIVISION OF WATER / DRINKING WATER BRANCH
BACTERIOLOGICAL ANALYSIS REPORT FORM

General Information – This Section To Be Completed By Collector

PWS ID: KY0183106

PWS Name: CRWD # 4

PWS Contact: Bill

PWS Address: 69 Marguerite Ln Concord Ky 42076

PWS Phone: 270-436-6304

Compliance Period (MMYYYY): 052009

Collection Date (MMDDYYYY): 05202009
(All Samples Reported on this Form were Collected on this Date.)

Collector Name: William Duncan 5-20-09
Signature/Date

General Information – This Section To Be Completed By Lab

Lab ID: 00001

Lab Receipt Date (MMDDYYYY): 05202009

Analysis Date (MMDDYYYY): 05202009

Total Coliform Analysis Method Code: 328

E Coli Analysis Method Code:

Lab Analyst: Mindy Martin 5/21/09
Signature/Date

Lab Supervisor: [illegible] 5/21/09
Signature/Date

Sample Information – This Section To Be Completed By Collector

Sample Type (RT, RP, or SP) (See Key)	Special Sample Reason (A, B, C, D, or E) (See Key)	Replacement Sample? (Y or Blank)	Location Code (See Instructions)	Repeat Location Code (DN, UP, or OR) (See Key)	Sample Time (24 hr)	Free Chlorine (Required for all disinfectants except Chloramine)	Total Chlorine (Required when disinfectant is Chloramine)
RT			09		0820	1.21	1.22

Analysis Information – This Section To Be Completed By Lab

Lab Sample Number	Analysis Time (24 hr)	Result (Total Coliform Count - or - TNTC - or - CNFG) (See Key)	Total Coliform (P/A)	E Coli (P/A)	Lab Sample Number of Original Sample (Required for Repeat and/or Replacement Samples) (See Instructions)
AG71539	1400		A		

The signatories of this form certify by their signatures that collection and analysis of the water sample analyzed and the resulting data hereby submitted, were completed in accordance with the provisions of 401 KAR Chapter 8, specifically including but not limited to 401 KAR 8:200, Section 1 and 401 KAR 8:040; and that the data submitted on this form is a true and accurate report of the results of collection and analysis performed pursuant to the above-referenced regulations. Violations of 401 KAR Chapter 8 are subject to severe penalties prescribed in KRS 224.99-010, up to $25,000 fine per day per violation and in some cases a violation may subject the violator to prison.

BACTERIOLOGICAL ANALYSIS REPORT FROM KEY

Sample Type:	RT = Routine (For Compliance)	RP = Repeat (For Compliance)	SP = Special (Not for Compliance)
Special Sample Reason: (Only if Sample Type = SP)	A = Suspected Contamination B = New Plant, Modification, or Line Extension	C = Treatment Modification D = Study/Investigation	E = Line Break, Emergency Repair
Repeat Location Code:	DN = Downstream	UP = Upstream	OR = Original Site

SAMPLE CATEGORY = TC

KENTUCKY DIVISION OF WATER / DRINKING WATER BRANCH
BACTERIOLOGICAL ANALYSIS REPORT FORM

General Information – This Section To Be Completed By Collector

PWSID: KY0180549

PWS Name: CRWD #1

PWS Contact: Bill

PWS Address: 69 Marguerite New Concord Ky 42076

PWS Phone: 270-436-6304

Compliance Period (MMYYYY): 052009

Collection Date (MMDDYYYY): 05272009
(All Samples Reported on this Form were Collected on this Date.)

Collector Name: William Duncan 5-27-09
Signature/Date

General Information – This Section To Be Completed By Lab

Lab ID: 00031

Lab Receipt Date (MMDDYYYY): 05272009

Analysis Date (MMDDYYYY): 05272009

Total Coliform Analysis Method Code: 028

E Coli Analysis Method Code:

Lab Analyst: Mindy Martin 5/28/09
Signature/Date

Lab Supervisor: [illegible] 5/28/09
Signature/Date

Sample Information – This Section To Be Completed By Collector / Analysis Information – This Section To Be Completed By Lab

Sample Type (RT, RP, or SP) (See Key)	Special Sample Reason (A, B, C, D, or E) (See Key)	Replacement Sample? (Y or Blank)	Location Code (See Instructions)	Repeat Location Code (DN, UP, or OR) (See Key)	Sample Time (24 hr)	Free Chlorine (Required for all disinfectants except Chloramine)	Total Chlorine (Required when disinfectant is Chloramine)	Lab Sample Number	Analysis Time (24 hr)	Result (Total Coliform Count - or - TNTC - or - CNFG) (See Key)	Total Coliform (P/A)	E Coli (P/A)	Lab Sample Number of Original Sample (Required for Repeat and/or Replacement Samples) (See Instructions)
RT			001		0730	1.18	1.95	AG72469	1430		A		

The signatories of this form certify by their signatures that collection and analysis of the water sample analyzed and the resulting data hereby submitted, were completed in accordance with the provisions of 401 KAR Chapter 8, specifically including but not limited to 401 KAR 8:200, Section 1 and 401 KAR 8:040; and that the data submitted on this form is a true and accurate report of the results of collection and analysis performed pursuant to the above-referenced regulations. Violations of 401 KAR Chapter 8 are subject to severe penalties prescribed in KRS 224.99-010, up to $25,000 fine per day per violation and in some cases a violation may subject the violator to prison.

BACTERIOLOGICAL ANALYSIS REPORT FROM KEY

Sample Type:	RT = Routine (For Compliance)	RP = Repeat (For Compliance)	SP = Special (Not for Compliance)
Special Sample Reason: (Only If Sample Type = SP)	A = Suspected Contamination B = New Plant, Modification, or Line Extension	C = Treatment Modification D = Study/Investigation	E = Line Break, Emergency Repair
Repeat Location Code: (Only If Sample Type = RP)	DN = Downstream	UP = Upstream	OR = Original Site

McCoy & McCoy Laboratories, Inc.
www.mccoylabs.com

PO Box 907 * 825 Industrial Rd.
Madisonville, KY 42431
270.821.7375
270.825.9200 fax

2456 Fortune Dr., Suite 160
Lexington, KY 40509
859.299.7775
859.299.7785 fax

173 Island Creek Rd.
Pikeville, KY 41501
606.432.3104
606.432.3171 fax

1800 Kentucky Ave.
Paducah, KY 42003
270.444.6547
270.444.6572 fax

5510 Fern Valley Rd.
Suite 104 Promenade Pavilion
Louisville, KY 40228
502.961.0001

SHADED AREA FOR LAB USE ONLY

CHAIN OF CUSTODY and ANALYTICAL REQUEST

Please print legibly

Client:	Bill To:	Send Results to:	Compliance Monitoring (check one)? Yes ☐ No ☐ Samples Chlorinated (check one)? Yes ☐ No ☐	PO#
(RW) #1				
Phone/Email:	Phone/Email	Phone/Email:	PWS ID# / STATE	
Batch#	Project Name	Collected by (Signature): BW	MMLI Quote # (if applicable)	

Sample ID#	COLLECTION DATE	TIME (24 hr)	SAMPLE DESCRIPTION Composite samples indicate begin time, end time and temp (°C) at end time	SAMPLE ANALYSIS REQUESTED Method ID if known (i.e. 8260B, 6010B/7470A...)	SAMPLE REMARKS (i.e. composite, grab, field readings, corrosive...)	Field Data pH S.U.	Field Data Temp °C	# OF CONTAINERS	MATRIX CODE (See Lower Left)	PRESERVATIVE CODE (See Lower Left)
	5-27-09	0730	001	RT						

1. Expedited services not available for all services, please call. 2. Samples received unannounced with less than 48 hours holding time remaining may be subject to additional surcharges. 3. Lab reserves the right to return unused portions of samples to client.

Relinquished by: (Signature)	Received By: (Signature)	DATE	TIME (24 hr)
William Duncan	[illegible]	5-27-09	0900
Relinquished by: (Signature)	Received by: (Signature)	DATE	TIME (24 hr)
Relinquished by: (Signature)	Received for MMLI by:	DATE	TIME (24 hr)

CONDITIONS UPON RECEIPT (CHECK ONE)
☐ Iced wet/Blue ____ °C Temp
☐ Ambient ____ °C Temp ☐ N/A

	YES	NO	N/A
Custody seals present/intact?	☐	☐	☐
Broken containers?	☐	☐	☐
COC agree with sample Labels?	☐	☐	☐
Correct containers for testing?	☐	☐	☐
Headspace issues acceptable?	☐	☐	☐
Holding time(s) acceptable?	☐	☐	☐
Preservative pH's acceptable?	☐	☐	☐
Was pH left unadjusted?	☐	☐	☐
All samples listed on COC received?	☐	☐	☐
Samples properly preserved?	☐	☐	☐
Client's sample documents received?	☐	☐	☐
COC been relinquished?	☐	☐	☐
Are tests listed for each sample?	☐	☐	☐

Method of Shipment (check one): US Postal ☐ UPS ☐ FedEx ☐ MMLI ☐ Client ☐
Date Shipped:
Airbill #:
Logged in by: Location:
LAB NOTES:
Follow up action required: YES ☐ NO ☐
Client informed on:
Client Rep:
By:
Reviewed by:
Date:

MATRIX CODES:
DW – Drinking Water
SW – Solid Waste
SO – Soil/Solid
SL – Sludge
GW – Ground Water
WW – Waste Water
OL – Oil
SU – Surface Water

PRESERVATIVE CODES:
NI – Nitric acid (HNO_3)
HA – Hydrochloric Acid (HCl)
SH – Sodium Hydroxide (NaOH)
ST – Sodium Thiosulfate
ZN – Zinc acetate
SA – Sulfuric Acid (H_2SO_4)
4C – 4°C
AA – Ascorbic Acid
NO – No preservative
SS – Sodium sulfite

SAMPLE CATEGORY = TC

KENTUCKY DIVISION OF WATER / DRINKING WATER BRANCH
BACTERIOLOGICAL ANALYSIS REPORT FORM

General Information – This Section To Be Completed By Collector

PWS ID: KY0180509

PWS Name: CRWD # 2

PWS Contact: Bill

PWS Address: 69 Marguerite New Concord Ky 42076

PWS Phone: 270-436-6304

Compliance Period (MMYYYY): 052009

Collection Date (MMDDYYYY): 05202009
(All Samples Reported on this Form were Collected on this Date.)

Collector Name: William Duncan 5-27-09
Signature/Date

General Information – This Section To Be Completed By Lab

Lab ID: 00091

Lab Receipt Date (MMDDYYYY): 05272009

Analysis Date (MMDDYYYY): 05272009

Total Coliform Analysis Method Code: 328

E Coli Analysis Method Code:

Lab Analyst: Mindy Martin 5/28/09
Signature/Date

Lab Supervisor: [illegible]
Signature/Date

Sample Information – This Section To Be Completed By Collector

Sample Type (RT, RP, or SP) (See Key)	Special Sample Reason (A, B, C, D, or E) (See Key)	Replacement Sample? (Y or Blank)	Location Code (See Instructions)	Repeat Location Code (DN, UP, or OR) (See Key)	Sample Time (24 hr)	Free Chlorine (Required for all disinfectants except Chloramine)	Total Chlorine (Required when disinfectant is Chloramine)
RT			001		0630	1.39	1.45

Analysis Information – This Section To Be Completed By Lab

Lab Sample Number	Analysis Time (24 hr)	Result (Total Coliform Count - or - TNTC - or - CNFG) (See Key)	Total Coliform (P/A)	E Coli (P/A)	Lab Sample Number of Original Sample (Required for Repeat and/or Replacement Samples) (See Instructions)
AG72470	1430		A		

The signatories of this form certify by their signatures that collection and analysis of the water sample analyzed and the resulting data hereby submitted, were completed in accordance with the provisions of 401 KAR Chapter 8, specifically including but not limited to 401 KAR 8:200, Section 1 and 401 KAR 8:040; and that the data submitted on this form is a true and accurate report of the results of collection and analysis performed pursuant to the above-referenced regulations. Violations of 401 KAR Chapter 8 are subject to severe penalties prescribed in KRS 224.99-010, up to $25,000 fine per day per violation and in some cases a violation may subject the violator to prison.

BACTERIOLOGICAL ANALYSIS REPORT FROM KEY

Sample Type:	RT = Routine (For Compliance)	RP = Repeat (For Compliance)	SP = Special (Not for Compliance)
Special Sample Reason: (Only If Sample Type = SP)	A = Suspected Contamination B = New Plant, Modification, or Line Extension	C = Treatment Modification D = Study/Investigation	E = Line Break, Emergency Repair
Repeat Location Code: (Only If Sample Type = RP)	DN = Downstream	UP = Upstream	OR = Original Site

McCoy & McCoy Laboratories, Inc.
www.mccoylabs.com

PO Box 907 * 825 Industrial Rd.
Madisonville, KY 42431
270.821.7375
270.825.9200 fax

2456 Fortune Dr., Suite 160
Lexington, KY 40509
859.299.7775
859.299.7785 fax

173 Island Creek Rd.
Pikeville, KY 41501
606.432.3104
606.432.3171 fax

1800 Kentucky Ave.
Paducah, KY 42003
270.444.6547
270.444.6572 fax

5510 Fern Valley Rd.
Suite 104 Promenade Pavilion
Louisville, KY 40228
502.961.0001

SHADED AREA FOR LAB USE ONLY

CHAIN OF CUSTODY and ANALYTICAL REQUEST

Please print legibly.

Client:	Bill To:	Send Results to:	Compliance Monitoring (check one)? Yes ☐ No ☐	PO#
CRWP #2			Samples Chlorinated (check one)? Yes ☐ No ☐	
Phone/Email:	Phone/Email	Phone/Email:	PWS ID# / STATE	
Batch#	Project Name	Collected by (Signature): Bill	MMLI Quote # (if applicable)	

Sample ID#	COLLECTION DATE	COLLECTION TIME (24 hr)	SAMPLE DESCRIPTION Composite samples indicate begin time, end time and temp (°C) at end time	SAMPLE ANALYSIS REQUESTED Method ID if known (i.e. 8260B, 6010B/7470A...)	SAMPLE REMARKS (i.e. composite, grab, field readings, corrosive...)	Field Data pH S.U.	Field Data Temp °C	# OF CONTAINERS	MATRIX CODE (See Lower Left)	PRESERVATIVE CODE (See Lower Left)
	5-27-09	0630	001	RT						

1. Expedited services not available for all services, please call. 2. Samples received unannounced with less than 48 hours holding time remaining may be subject to additional surcharges. 3. Lab reserves the right to return unused portions of samples to client.

Relinquished by: (Signature)	Received By: (Signature)	DATE	TIME (24 hr)
William Duncan	Dark [signature]	5-27-09	0900
Relinquished by: (Signature)	Received by: (Signature)	DATE	TIME (24 hr)
Relinquished by: (Signature)	Received for MMLI by:	DATE	TIME (24 hr)

MATRIX CODES:
DW – Drinking Water
SW – Solid Waste
SO – Soil/Solid
SL – Sludge
GW – Ground Water
WW – Waste Water
OL – Oil
SU – Surface Water

PRESERVATIVE CODES:
NI – Nitric acid (HNO_3)
HA – Hydrochloric Acid (HCl)
SH – Sodium Hydroxide (NaOH)
ST – Sodium Thiosulfate
ZN – Zinc acetate
SA – Sulfuric Acid (H_2SO_4)
4C – 4°C
AA – Ascorbic Acid
NO – No preservative
SS – Sodium sulfite

CONDITIONS UPON RECEIPT (CHECK ONE)
☐ Iced wet/Blue ____ °C Temp
☐ Ambient ____ °C Temp ☐ N/A

	YES	NO	N/A
Custody seals present/intact?	☐	☐	☐
Broken containers?	☐	☐	☐
COC agree with sample Labels?	☐	☐	☐
Correct containers for testing?	☐	☐	☐
Headspace issues acceptable?	☐	☐	☐
Holding time(s) acceptable?	☐	☐	☐
Preservative pH's acceptable?	☐	☐	☐
Was pH left unadjusted?	☐	☐	☐
All samples listed on COC received?	☐	☐	☐
Samples properly preserved?	☐	☐	☐
Client's sample documents received?	☐	☐	☐
COC been relinquished?	☐	☐	☐
Are tests listed for each sample?	☐	☐	☐

Method of Shipment (check one): UPS ☐ FedEx ☐ MMLI ☐ US Postal ☐ Client ☐
Date Shipped:
Airbill#:
Logged in by: ____ Location: ____
LAB NOTES
Follow up action required: YES ☐ NO ☐
Client informed on: ____/____/____
Client Rep:
By:
Reviewed by:
Date: ____/____/____

CE4486

SAMPLE CATEGORY = TC

KENTUCKY DIVISION OF WATER / DRINKING WATER BRANCH
BACTERIOLOGICAL ANALYSIS REPORT FORM

General Information – This Section To Be Completed By Collector

PWSID: KY0180558

PWS Name: CRWD # 3

PWS Contact: Bill

PWS Address: 69 Marguerite New Concord Ky 42076

PWS Phone: 270-436-6304

Compliance Period (MMYYYY): 052009

Collection Date (MMDDYYYY): 05272009
(All Samples Reported on this Form were Collected on this Date.)

Collector Name: William Duncan 5-27-09
Signature/Date

General Information – This Section To Be Completed By Lab

Lab ID: 00031

Lab Receipt Date (MMDDYYYY): 05272009

Analysis Date (MMDDYYYY): 05272009

Total Coliform Analysis Method Code: 028

E Coli Analysis Method Code:

Lab Analyst: Mindy Martin 5/28/09
Signature/Date

Lab Supervisor: 5/28/09
Signature/Date

Sample Information – This Section To Be Completed By Collector / Analysis Information – This Section To Be Completed By Lab

Sample Type (RT, RP, or SP) (See Key)	Special Sample Reason (A, B, C, D, or E) (See Key)	Replacement Sample? (Y or Blank)	Location Code (See Instructions)	Repeat Location Code (DN, UP, or OR) (See Key)	Sample Time (24 hr)	Free Chlorine (Required for all disinfectants except Chloramine)	Total Chlorine (Required when disinfectant is Chloramine)	Lab Sample Number	Analysis Time (24 hr)	Result (Total Coliform Count - or - TNTC - or - CNFG) (See Key)	Total Coliform (P/A)	E Coli (P/A)	Lab Sample Number of Original Sample (Required for Repeat and/or Replacement Samples) (See Instructions)
RT			CC1		0900	1.55	1.31	AG72471	1430		A		

The signatories of this form certify by their signatures that collection and analysis of the water sample analyzed and the resulting data hereby submitted, were completed in accordance with the provisions of 401 KAR Chapter 8, specifically including but not limited to 401 KAR 8:200, Section 1 and 401 KAR 8:040; and that the data submitted on this form is a true and accurate report of the results of collection and analysis performed pursuant to the above-referenced regulations. Violations of 401 KAR Chapter 8 are subject to severe penalties prescribed in KRS 224.99-010, up to $25,000 fine per day per violation and in some cases a violation may subject the violator to prison.

BACTERIOLOGICAL ANALYSIS REPORT FROM KEY

Sample Type:	RT = Routine (For Compliance)	RP = Repeat (For Compliance)	SP = Special (Not for Compliance)
Special Sample Reason: (Only If Sample Type = SP)	A = Suspected Contamination B = New Plant, Modification, or Line Extension	C = Treatment Modification D = Study/Investigation	E = Line Break, Emergency Repair
Repeat Location Code: (Only If Sample Type = RP)	DN = Downstream	UP = Upstream	OR = Original Site

McCoy & McCoy Laboratories, Inc.
www.mccoylabs.com

PO Box 907 * 825 Industrial Rd.
Madisonville, KY 42431
270.821.7375
270.825.9200 fax

2456 Fortune Dr., Suite 160
Lexington, KY 40509
859.299.7775
859.299.7785 fax

173 Island Creek Rd.
Pikeville, KY 41501
606.432.3104
606.432.3171 fax

1800 Kentucky Ave.
Paducah, KY 42003
270.444.6547
270.444.6572 fax

5510 Fern Valley Rd.
Suite 104 Promenade Pavilion
Louisville, KY 40228
502.961.0001

SHADED AREA FOR LAB USE ONLY

CHAIN OF CUSTODY and ANALYTICAL REQUEST

Please print legibly:

Client: CRWD # 3	Bill To:	Send Results to:	Compliance Monitoring (check one)? Yes ☐ No ☐ Samples Chlorinated (check one)? Yes ☐ No ☐	PO#
Phone/Email:	Phone/Email	Phone/Email:	PWS ID# / STATE	
Batch#	Project Name	Collected by (Signature): RW	MMLI Quote # (if applicable)	

Sample ID#	COLLECTION DATE	TIME (24 hr)	SAMPLE DESCRIPTION Composite samples indicate begin time, end time and temp (°C) at end time	SAMPLE ANALYSIS REQUESTED Method ID if known (i.e. 8260B, 6010B/7470A...)	SAMPLE REMARKS (i.e. composite, grab, field readings, corrosive...)	Field Data pH S.U.	Field Data Temp °C	# OF CONTAINERS	MATRIX CODE (See Lower Left)	PRESERVATIVE CODE (See Lowerr Left)
	5-27-09	0600	001	RT						

1. Expedited services not available for all services, please call. 2. Samples received unannounced with less than 48 hours holding time remaining may be subject to additional surcharges. 3. Lab reserves the right to return unused portions of samples to client.

Relinquished by: (Signature)	Received By: (Signature)	DATE	TIME (24 hr)
[signature]	[signature]	5-27-09	0900
Relinquished by: (Signature)	Received by: (Signature)	DATE	TIME (24 hr)
Relinquished by: (Signature)	Received for MMLI by:	DATE	TIME (24 hr)

CONDITIONS UPON RECEIPT (CHECK ONE)
☐ Iced wet/Blue ____ °C Temp
☐ Ambient ____ °C Temp ☐ N/A

	YES	NO	N/A
Custody seals present/intact?	☐	☐	☐
Broken containers?	☐	☐	☐
COC agree with sample Labels?	☐	☐	☐
Correct containers for testing?	☐	☐	☐
Headspace issues acceptable?	☐	☐	☐
Holding time(s) acceptable?	☐	☐	☐
Preservative pH's acceptable?	☐	☐	☐
Was pH left unadjusted?	☐	☐	☐
All samples listed on COC received?	☐	☐	☐
Samples properly preserved?	☐	☐	☐
Client's sample documents received?	☐	☐	☐
COC been relinquished?	☐	☐	☐
Are tests listed for each sample?	☐	☐	☐

Method of Shipment (check one) US Postal ☐ UPS ☐ FedEx ☐ MMLI ☐ Client ☐
Date Shipped:
Airbill#:
Logged in by: Location:
LAB NOTES
Follow up action required: YES ☐ NO ☐
Client informed on: / /
Client Rep:
By:
Reviewed by:
Date

MATRIX CODES:
DW – Drinking Water
SW – Solid Waste
SO – Soil/Solid
SL – Sludge
GW – Ground Water
WW – Waste Water
OL – Oil
SU – Surface Water

PRESERVATIVE CODES:
NI – Nitric acid (HNO_3)
HA – Hydrochloric Acid (HCl)
SH – Sodium Hydroxide (NaOH)
ST – Sodium Thiosulfate
ZN – Zinc acetate
SA – Sulfuric Acid (H_2SO_4)
4C – 4°C
AA – Ascorbic Acid
NO – No preservative
SS – Sodium sulfite

SAMPLE CATEGORY = TC

KENTUCKY DIVISION OF WATER / DRINKING WATER BRANCH
BACTERIOLOGICAL ANALYSIS REPORT FORM

General Information -- This Section To Be Completed By Collector

PWSID: KY0183106

PWS Name: CRWD # 4

PWS Contact: Bill

PWS Address: 69 Marguerite New Concord Ky 42076

PWS Phone: 270-436-6304

Compliance Period (MMYYYY): 052009

Collection Date (MMDDYYYY): 05272009
(All Samples Reported on this Form were Collected on this Date.)

Collector Name: William Duncan 5-27-09
Signature/Date

General Information -- This Section To Be Completed By Lab

Lab ID: 00001

Lab Receipt Date (MMDDYYYY): 05272009

Analysis Date (MMDDYYYY): 05272009

Total Coliform Analysis Method Code: 028

E Coli Analysis Method Code:

Lab Analyst: Mindy Martin 5/28/09
Signature/Date

Lab Supervisor: 5/28/09
Signature/Date

Sample Information -- This Section To Be Completed By Collector / Analysis Information -- This Section To Be Completed By Lab

Sample Type (RT, RP, or SP) (See Key)	Special Sample Reason (A, B, C, D, or E) (See Key)	Replacement Sample? (Y or Blank)	Location Code (See Instructions)	Repeat Location Code (DN, UP, or OR) (See Key)	Sample Time (24 hr)	Free Chlorine (Required for all disinfectants except Chloramine)	Total Chlorine (Required when disinfectant is Chloramine)	Lab Sample Number	Analysis Time (24 hr)	Result (Total Coliform Count - or - TNTC - or - CNFG) (See Key)	Total Coliform (P/A)	E Coli (P/A)	Lab Sample Number of Original Sample (Required for Repeat and/or Replacement Samples) (See Instructions)
RT			221		0825	1.06	1.12	A672472	1430		A		

BACTERIOLOGICAL ANALYSIS REPORT FROM KEY

Sample Type:	RT = Routine (For Compliance)	RP = Repeat (For Compliance)	SP = Special (Not for Compliance)
Special Sample Reason: (Only If Sample Type = SP)	A = Suspected Contamination B = New Plant, Modification, or Line Extension	C = Treatment Modification D = Study/Investigation	E = Line Break, Emergency Repair
Repeat Location Code:	DN = Downstream	UP = Upstream	OR = Original Site

The signatories of this form certify by their signatures that collection and analysis of the water sample analyzed and the resulting data hereby submitted, were completed in accordance with the provisions of 401 KAR Chapter 8, specifically including but not limited to 401 KAR 8:200, Section 1 and 401 KAR 8:040; and that the data submitted on this form is a true and accurate report of the results of collection and analysis performed pursuant to the above-referenced regulations. Violations of 401 KAR Chapter 8 are subject to severe penalties prescribed in KRS 224.99-010, up to $25,000 fine per day per violation and in some cases a violation may subjected the violator to prison.

McCoy & McCoy Laboratories, Inc.
www.mccoylabs.com

PO Box 907 * 825 Industrial Rd.
Madisonville, KY 42431
270.821.7375
270.825.9200 fax

2456 Fortune Dr., Suite 160
Lexington, KY 40509
859.299.7775
859.299.7785 fax

173 Island Creek Rd.
Pikeville, KY 41501
606.432.3104
606.432.3171 fax

1800 Kentucky Ave.
Paducah, KY 42003
270.444.6547
270.444.6572 fax

5510 Fern Valley Rd.
Suite 104 Promenade Pavilion
Louisville, KY 40228
502.961.0001

SHADED AREA FOR LAB USE ONLY

CHAIN OF CUSTODY and ANALYTICAL REQUEST

Please print legibly.

Client:	Bill To:	Send Results to:	Compliance Monitoring (check one)? Yes ☐ No ☐ Samples Chlorinated (check one)? Yes ☐ No ☐	PO#
CRWD # 4				
Phone/Email:	Phone/Email	Phone/Email:	PWS ID# / STATE	
Batch#	Project Name	Collected by (Signature): Bill	MMLI Quote # (if applicable)	

Sample ID#	COLLECTION DATE	COLLECTION TIME (24 hr)	SAMPLE DESCRIPTION Composite samples indicate begin time, end time and temp (°C) at end time	SAMPLE ANALYSIS REQUESTED Method ID if known (i.e. 8260B, 6010B/7470A...)	SAMPLE REMARKS (i.e. composite, grab, field readings, corrosive...)	Field Data pH S.U.	Field Data Temp °C	# OF CONTAINERS	MATRIX CODE (See Lower Left)	PRESERVATIVE CODE (See Lower Left)
	5-27-09	0800	001	RT						

1. Expedited services not available for all services, please call. 2. Samples received unannounced with less than 48 hours holding time remaining may be subject to additional surcharges. 3. Lab reserves the right to return unused portions of samples to client.

Relinquished by: (Signature)	Received By: (Signature)	DATE	TIME (24 hr)
[illegible]	[illegible]	5-27-09	0900
Relinquished by: (Signature)	Received by: (Signature)	DATE	TIME (24 hr)
Relinquished by: (Signature)	Received for MMLI by:	DATE	TIME (24 hr)

CONDITIONS UPON RECEIPT (CHECK ONE)
☐ Iced wet/Blue C Temp
☐ Ambient C Temp ☐ N/A

	YES	NO	N/A
Custody seals present/intact?	☐	☐	☐
Broken containers?	☐	☐	☐
COC agree with sample Labels?	☐	☐	☐
Correct containers for testing?	☐	☐	☐
Headspace issues acceptable?	☐	☐	☐
Holding time(s) acceptable?	☐	☐	☐
Preservative pH's acceptable?	☐	☐	☐
Was pH left unadjusted?	☐	☐	☐
All samples listed on COC received?	☐	☐	☐
Samples properly preserved?	☐	☐	☐
Client's sample documents received?	☐	☐	☐
COC been relinquished?	☐	☐	☐
Are tests listed for each sample?	☐	☐	☐

Method of Shipment (check one): US Postal ☐ UPS ☐ FedEx ☐ MMLI ☐ Client ☐
Date Shipped:
Airbill#:
Logged in by: Location:
LAB NOTES:
Follow up action required? YES ☐ NO ☐
Client informed on:
Client Rep:
By:
Reviewed by:
Date:

MATRIX CODES:
DW – Drinking Water
SW – Solid Waste
SO – Soil/Solid
SL – Sludge
GW – Ground Water
WW – Waste Water
OL – Oil
SU – Surface Water

PRESERVATIVE CODES:
NI – Nitric acid (HNO_3)
HA – Hydrochloric Acid (HCl)
SH – Sodium Hydroxide (NaOH)
ST – Sodium Thiosulfate
ZN – Zinc acetate
SA – Sulfuric Acid (H_2SO_4)
4C – 4°C
AA – Ascorbic Acid
NO – No preservative
SS – Sodium sulfite

SAMPLE CATEGORY = TC

KENTUCKY DIVISION OF WATER / DRINKING WATER BRANCH
BACTERIOLOGICAL ANALYSIS REPORT FORM

General Information – This Section To Be Completed By Collector

PWS ID: KY0180549

Compliance Period (MMYYYY): 062009

PWS Name: CRWD #1

PWS Contact: Bill

Collection Date (MMDDYYYY): 06172009
(All Samples Reported on this Form were Collected on this Date.)

PWS Address: 69 Marguerite New Concord Ky 42076

PWS Phone: 270-436-6304

Collector Name: William Duncan 6-17-09
Signature/Date

General Information – This Section To Be Completed By Lab

Lab ID: 00051

Lab Receipt Date (MMDDYYYY): 06172009

Analysis Date (MMDDYYYY): 06172009

Total Coliform Analysis Method Code: 328

E Coli Analysis Method Code:

Lab Analyst: Mindy Martin 6/18/09
Signature/Date

Lab Supervisor: 6/18/09
Signature/Date

Sample Information – This Section To Be Completed By Collector

Sample Type (RT, RP, or SP) (See Key)	Special Sample Reason (A, B, C, D, or E) (See Key)	Replacement Sample? (Y or Blank)	Location Code (See Instructions)	Repeat Location Code (DN, UP, or OR) (See Key)	Sample Time (24 hr)	Free Chlorine (Required for all disinfectants except Chloramine)	Total Chlorine (Required when disinfectant is Chloramine)
RT			002		0730	1.98	1.34
						.	.
						.	.
						.	.
						.	.
						.	.
						.	.
						.	.
						.	.
						.	.

Analysis Information – This Section To Be Completed By Lab

Lab Sample Number	Analysis Time (24 hr)	Result (Total Coliform Count - or - TNTC - or - CNFG) (See Key)	Total Coliform (P/A)	E Coli (P/A)	Lab Sample Number of Original Sample (Required for Repeat and/or Replacement Samples) (See Instructions)
AG72294	1530		A		

The signatories of this form certify by their signatures that collection and analysis of the water sample analyzed and the resulting data hereby submitted, were completed in accordance with the provisions of 401 KAR Chapter 8, specifically including but not limited to 401 KAR 8:200, Section 1 and 401 KAR 8:040; and that the data submitted on this form is a true and accurate report of the results of collection and analysis performed pursuant to the above-referenced regulations. Violations of 401 KAR Chapter 8 are subject to severe penalties prescribed in KRS 224.99-010, up to $25,000 fine per day per violation and in some cases a violation may subject the violator to prison.

BACTERIOLOGICAL ANALYSIS REPORT FROM KEY

Sample Type:	RT = Routine (For Compliance)	RP = Repeat (For Compliance)	SP = Special (Not for Compliance)
Special Sample Reason: (Only If Sample Type = SP)	A = Suspected Contamination B = New Plant, Modification, or Line Extension	C = Treatment Modification D = Study/Investigation	E = Line Break, Emergency Repair
Repeat Location Code: (Only If Sample Type = RP)	DN = Downstream	UP = Upstream	OR = Original Site

McCoy & McCoy Laboratories, Inc.
www.mccoylabs.com

PO Box 907 * 825 Industrial Rd.
Madisonville, KY 42431
270.821.7375
270.825.9200 fax

2456 Fortune Dr., Suite 160
Lexington, KY 40509
859.299.7775
859.299.7785 fax

173 Island Creek Rd.
Pikeville, KY 41501
606.432.3104
606.432.3171 fax

1800 Kentucky Ave.
Paducah, KY 42003
270.444.6547
270.444.6572 fax

5510 Fern Valley Rd.
Suite 104 Promenade Pavilion
Louisville, KY 40228
502.961.0001

SHADED AREA FOR LAB USE ONLY

CHAIN OF CUSTODY and ANALYTICAL REQUEST

Please print legibly.

Client:	Bill To:	Send Results to:	Compliance Monitoring (check one)? Yes ☐ No ☐	PO#
CRWD# 1 -			Samples Chlorinated (check one)? Yes ☐ No ☐	
Phone/Email:	Phone/Email	Phone/Email:	PWS ID# / STATE	
Batch#	Project Name	Collected by (Signature): Bill	MMLI Quote # (if applicable)	

Sample ID#	COLLECTION DATE	COLLECTION TIME (24 hr)	SAMPLE DESCRIPTION Composite samples indicate begin time, end time and temp (°C) at end time	SAMPLE ANALYSIS REQUESTED Method ID if known (i.e. 8260B, 6010B/7470A...)	SAMPLE REMARKS (i.e. composite, grab, field readings, corrosive...)	Field Data pH S.U.	Field Data Temp °C	# OF CONTAINERS	MATRIX CODE (See Lower Left)	PRESERVATIVE CODE (See Lower Left)
	6-17-09	0730	002	RT						

1. Expedited services not available for all services, please call. 2. Samples received unannounced with less than 48 hours holding time remaining may be subject to additional surcharges. 3. Lab reserves the right to return unused portions of samples to client.

Relinquished by: (Signature)	Received By: (Signature)	DATE	TIME (24 hr)
William Duncan	Derek [signature]	6-17-09	0900
Relinquished by: (Signature)	Received by: (Signature)	DATE	TIME (24 hr)
Relinquished by: (Signature)	Received for MMLI by:	DATE	TIME (24 hr)

MATRIX CODES:
DW – Drinking Water
SW – Solid Waste
SO – Soil/Solid
SL – Sludge
GW – Ground Water
WW – Waste Water
OL – Oil
SU – Surface Water

PRESERVATIVE CODES:
NI – Nitric acid (HNO_3)
HA – Hydrochloric Acid (HCl)
SH – Sodium Hydroxide (NaOH)
ST – Sodium Thiosulfate
ZN – Zinc acetate
SA – Sulfuric Acid (H_2SO_4)
4C – 4°C
AA – Ascorbic Acid
NO – No preservative
SS – Sodium sulfite

CONDITIONS UPON RECEIPT (CHECK ONE)
☐ Iced wet/Blue ____ °C Temp
☐ Ambient ____ °C Temp ☐ N/A

	YES	NO	N/A
Custody seals present/intact?	☐	☐	☐
Broken containers?	☐	☐	☐
COC agree with sample Labels?	☐	☐	☐
Correct containers for testing?	☐	☐	☐
Headspace issues acceptable?	☐	☐	☐
Holding time(s) acceptable?	☐	☐	☐
Preservative pH's acceptable?	☐	☐	☐
Was pH left unadjusted?	☐	☐	☐
All samples listed on COC received?	☐	☐	☐
Samples properly preserved?	☐	☐	☐
Client's sample documents received?	☐	☐	☐
COC been relinquished?	☐	☐	☐
Are tests listed for each sample?	☐	☐	☐

Method of Shipment (check one): US Postal ☐ UPS ☐ FedEx ☐ MMLI ☐ Client ☐
Date Shipped:
Airbill#:
Logged in by: Location:
LAB NOTES:
Follow up action required: YES ☐ NO ☐
Client informed on: / /
Client Rep.:
By:
Reviewed by:
Date: / /

SAMPLE CATEGORY = TC

KENTUCKY DIVISION OF WATER / DRINKING WATER BRANCH
BACTERIOLOGICAL ANALYSIS REPORT FORM

General Information – This Section To Be Completed By Collector

PWS ID: KY0180509

PWS Name: CRWD #2

PWS Contact: Bill

PWS Address: 69 Marguerite New Concord Ky 42076

PWS Phone: 270-436-6304

Compliance Period (MMYYYY): 062009

Collection Date (MMDDYYYY): 06172009
(All Samples Reported on this Form were Collected on this Date.)

Collector Name: William Duncan 6-17-09
Signature/Date

General Information – This Section To Be Completed By Lab

Lab ID: 00031

Lab Receipt Date (MMDDYYYY): 06172009

Analysis Date (MMDDYYYY): 06172009

Total Coliform Analysis Method Code: 528

E Coli Analysis Method Code:

Lab Analyst: [signature] 6/18/09
Signature/Date

Lab Supervisor: [signature] 6/18/09
Signature/Date

Sample Information – This Section To Be Completed By Collector

Sample Type (RT, RP, or SP) (See Key)	Special Sample Reason (A, B, C, D, or E) (See Key)	Replacement Sample? (Y or Blank)	Location Code (See Instructions)	Repeat Location Code (DN, UP, or OR) (See Key)	Sample Time (24 hr)	Free Chlorine (Required for all disinfectants except Chloramine)	Total Chlorine (Required when disinfectant is Chloramine)
RT			002		0615	1.15	1.21
						.	.
						.	.
						.	.
						.	.
						.	.
						.	.
						.	.
						.	.
						.	.

Analysis Information – This Section To Be Completed By Lab

Lab Sample Number	Analysis Time (24 hr)	Result (Total Coliform Count - or - TNTC - or - CNFG) (See Key)	Total Coliform (P/A)	E Coli (P/A)	Lab Sample Number of Original Sample (Required for Repeat and/or Replacement Samples) (See Instructions)
AG77295	1520		A		

The signatories of this form certify by their signatures that collection and analysis of the water sample analyzed and the resulting data hereby submitted, were completed in accordance with the provisions of 401 KAR Chapter 8, specifically including but not limited to 401 KAR 8:200, Section 1 and 401 KAR 8:040; and that the data submitted on this form is a true and accurate report of the results of collection and analysis performed pursuant to the above-referenced regulations. Violations of 401 KAR Chapter 8 are subject to severe penalties prescribed in KRS 224.99-010, up to $25,000 fine per day per violation and in some cases a violation may subject the violator to prison.

BACTERIOLOGICAL ANALYSIS REPORT FROM KEY

Sample Type:	RT = Routine (For Compliance)	RP = Repeat (For Compliance)	SP = Special (Not for Compliance)
Special Sample Reason: (Only If Sample Type = SP)	A = Suspected Contamination B = New Plant, Modification, or Line Extension	C = Treatment Modification D = Study/Investigation	E = Line Break, Emergency Repair
Repeat Location Code: (Only If Sample Type = RP)	DN = Downstream	UP = Upstream	OR = Original Site

McCoy & McCoy Laboratories, Inc.
www.mccoylabs.com

PO Box 907 * 825 Industrial Rd.
Madisonville, KY 42431
270.821.7375
270.825.9200 fax

2456 Fortune Dr., Suite 160
Lexington, KY 40509
859.299.7775
859.299.7785 fax

173 Island Creek Rd.
Pikeville, KY 41501
606.432.3104
606.432.3171 fax

1800 Kentucky Ave.
Paducah, KY 42003
270.444.6547
270.444.6572 fax

5510 Fern Valley Rd.
Suite 104 Promenade Pavilion
Louisville, KY 40228
502.961.0001

SHADED AREA FOR LAB USE ONLY

CHAIN OF CUSTODY and ANALYTICAL REQUEST

Please print legibly.

Client:	Bill To:	Send Results to:	Compliance Monitoring (check one)? Yes ☐ No ☐ / Samples Chlorinated (check one)? Yes ☐ No ☐	PO#
CRWD #2				
Phone/Email:	Phone/Email	Phone/Email:	PWS ID# / STATE	
Batch#	Project Name	Collected by (Signature): Bill	MMLI Quote # (if applicable)	

Sample ID#	COLLECTION DATE	COLLECTION TIME (24 hr)	SAMPLE DESCRIPTION Composite samples indicate begin time, end time and temp (°C) at end time	SAMPLE ANALYSIS REQUESTED Method ID if known (i.e. 8260B, 6010B/7470A...)	SAMPLE REMARKS (i.e. composite, grab, field readings, corrosive...)	Field Data pH S.U.	Field Data Temp °C	# OF CONTAINERS	MATRIX CODE (See Lower Left)	PRESERVATIVE CODE (See Lower Left)
	6-17-09	0615	002	RT						

1. Expedited services not available for all services, please call. 2. Samples received unannounced with less than 48 hours holding time remaining may be subject to additional surcharges. 3. Lab reserves the right to return unused portions of samples to client.

Relinquished by: (Signature)	Received By: (Signature)	DATE	TIME (24 hr)
William Duncan	[signature]	6-17-09	0900
Relinquished by: (Signature)	Received by: (Signature)	DATE	TIME (24 hr)
Relinquished by: (Signature)	Received for MMLI by:	DATE	TIME (24 hr)

MATRIX CODES:
DW – Drinking Water
SW – Solid Waste
SO – Soil/Solid
SL – Sludge
GW – Ground Water
WW – Waste Water
OL – Oil
SU – Surface Water

PRESERVATIVE CODES:
NI – Nitric acid (HNO_3)
HA – Hydrochloric Acid (HCl)
SH – Sodium Hydroxide (NaOH)
ST – Sodium Thiosulfate
ZN – Zinc acetate
SA – Sulfuric Acid (H_2SO_4)
4C – 4°C
AA – Ascorbic Acid
NO – No preservative
SS – Sodium sulfite

CONDITIONS UPON RECEIPT (CHECK ONE)
☐ Iced wet/Blue ____ °C Temp
☐ Ambient ____ °C Temp ☐ N/A

	YES	NO	N/A
Custody seals present/intact?	☐	☐	☐
Broken containers?	☐	☐	☐
COC agree with sample Labels?	☐	☐	☐
Correct containers for testing?	☐	☐	☐
Headspace issues acceptable?	☐	☐	☐
Holding time(s) acceptable?	☐	☐	☐
Preservative pH's acceptable?	☐	☐	☐
Was pH left unadjusted?	☐	☐	☐
All samples listed on COC received?	☐	☐	☐
Samples properly preserved?	☐	☐	☐
Client's sample documents received?	☐	☐	☐
COC been relinquished?	☐	☐	☐
Are tests listed for each sample?	☐	☐	☐

Method of Shipment (check one): UPS ☐ FedEx ☐ MMLI ☐ US Postal ☐ Client ☐
Date Shipped:
Airbill#:
Logged in by: ____ Location: ____
LAB NOTES: ____
Follow up action required: YES ☐ NO ☐
Client informed on: ____ / ____ / ____
Client Rep: ____
By: ____
Reviewed by: ____
Date: ____ / ____ / ____

SAMPLE CATEGORY = TC

KENTUCKY DIVISION OF WATER / DRINKING WATER BRANCH
BACTERIOLOGICAL ANALYSIS REPORT FORM

General Information -- This Section To Be Completed By Collector

PWS ID: KY0180502

PWS Name: CRWD #3

PWS Contact: Bill

PWS Address: 69 Marguerite New Concord Ky 42076

PWS Phone: 270-436-6304

Compliance Period (MMYYYY): 062009

Collection Date (MMDDYYYY): 06172009
(All Samples Reported on this Form were Collected on this Date.)

Collector Name: William Duncan 6-17-09
Signature/Date

General Information -- This Section To Be Completed By Lab

Lab ID: 00031

Lab Receipt Date (MMDDYYYY): 06172009

Analysis Date (MMDDYYYY): 06172009

Total Coliform Analysis Method Code: 528

E Coli Analysis Method Code:

Lab Analyst: Minda Martin 6/18/09
Signature/Date

Lab Supervisor: 6/18/09
Signature/Date

Sample Information -- This Section To Be Completed By Collector

Sample Type (RT, RP, or SP) (See Key)	Special Sample Reason (A, B, C, D, or E) (See Key)	Replacement Sample? (Y or Blank)	Location Code (See Instructions)	Repeat Location Code (DN, UP, or OR) (See Key)	Sample Time (24 hr)	Free Chlorine (Required for all disinfectants except Chloramine)	Total Chlorine (Required when disinfectant is Chloramine)
RT			002		0600	1.29	1.29

Analysis Information -- This Section To Be Completed By Lab

Lab Sample Number	Analysis Time (24 hr)	Result (Total Coliform Count - or - TNTC - or - CNFG) (See Key)	Total Coliform (P/A)	E Coli (P/A)	Lab Sample Number of Original Sample (Required for Repeat and/or Replacement Samples) (See Instructions)
A677296	1500		A		

The signatories of this form certify by their signatures that collection and analysis of the water sample analyzed and the resulting data hereby submitted, were completed in accordance with the provisions of 401 KAR Chapter 8, specifically including but not limited to 401 KAR 8:200, Section 1 and 401 KAR 8:040; and that the data submitted on this form is a true and accurate report of the results of collection and analysis performed pursuant to the above-referenced regulations. Violations of 401 KAR Chapter 8 are subject to severe penalties prescribed in KRS 224.99-010, up to $25,000 fine per day per violation and in some cases a violation may subject the violator to prison.

BACTERIOLOGICAL ANALYSIS REPORT FROM KEY

Sample Type:	RT = Routine (For Compliance)	RP = Repeat (For Compliance)	SP = Special (Not for Compliance)
Special Sample Reason: (Only If Sample Type = SP)	A = Suspected Contamination B = New Plant, Modification, or Line Extension	C = Treatment Modification D = Study/Investigation	E = Line Break, Emergency Repair
Repeat Location Code: (Only If Sample Type = RP)	DN = Downstream	UP = Upstream	OR = Original Site

McCoy & McCoy Laboratories, Inc.
www.mccoylabs.com

PO Box 907 * 825 Industrial Rd.
Madisonville, KY 42431
270.821.7375
270.825.9200 fax

2456 Fortune Dr., Suite 160
Lexington, KY 40509
859.299.7775
859.299.7785 fax

173 Island Creek Rd.
Pikeville, KY 41501
606.432.3104
606.432.3171 fax

1800 Kentucky Ave.
Paducah, KY 42003
270.444.6547
270.444.6572 fax

5510 Fern Valley Rd.
Suite 104 Promenade Pavilion
Louisville, KY 40228
502.961.0001

SHADED AREA FOR LAB USE ONLY

CHAIN OF CUSTODY and ANALYTICAL REQUEST

Please print legibly

Client:	Bill To:	Send Results to:	Compliance Monitoring (check one)? Yes ☐ No ☐ Samples Chlorinated (check one)? Yes ☐ No ☐	PO#
CRWD # 3				
Phone/Email:	Phone/Email	Phone/Email:	PWS ID# / STATE	
Batch#	Project Name	Collected by (Signature): BJD	MMLI Quote # (if applicable)	

Sample ID#	COLLECTION DATE	TIME (24 hr)	SAMPLE DESCRIPTION Composite samples indicate begin time, end time and temp (°C) at end time	SAMPLE ANALYSIS REQUESTED Method ID if known (i.e. 8260B, 6010B/7470A...)	SAMPLE REMARKS (i.e. composite, grab, field readings, corrosive...)	Field Data pH S.U.	Field Data Temp °C	# OF CONTAINERS	MATRIX CODE (See Lower Left)	PRESERVATIVE CODE (See Lower Left)
	6-17-09	0600	002	RT						

1. Expedited services not available for all services, please call. 2. Samples received unannounced with less than 48 hours holding time remaining may be subject to additional surcharges. 3. Lab reserves the right to return unused portions of samples to client.

Relinquished by: (Signature)	Received By: (Signature)	DATE	TIME (24 hr)
William Duncan	[signature]	6-17-09	0900
Relinquished by: (Signature)	Received by: (Signature)	DATE	TIME (24 hr)
Relinquished by: (Signature)	Received for MMLI by:	DATE	TIME (24 hr)

CONDITIONS UPON RECEIPT (CHECK ONE)
☐ Iced wet/Blue C Temp
☐ Ambient C Temp ☐ N/A

	YES	NO	N/A
Custody seals present/intact?	☐	☐	☐
Broken containers?	☐	☐	☐
COC agree with sample Labels?	☐	☐	☐
Correct containers for testing?	☐	☐	☐
Headspace issues acceptable?	☐	☐	☐
Holding time(s) acceptable?	☐	☐	☐
Preservative pH's acceptable?	☐	☐	☐
Was pH left unadjusted?	☐	☐	☐
All samples listed on COC received?	☐	☐	☐
Samples properly preserved?	☐	☐	☐
Client's sample documents received?	☐	☐	☐
COC been relinquished?	☐	☐	☐
Are tests listed for each sample?	☐	☐	☐

Method of Shipment (check one): US Postal ☐ UPS ☐ FedEx ☐ MMLI ☐ Client ☐
Date Shipped:
Airbill#:
Logged in by: Location:
LAB NOTES:
Follow up action required: YES ☐ NO ☐
Client informed on:
Client Rep:
By:
Reviewed by:
Date:

MATRIX CODES:
DW – Drinking Water
SW – Solid Waste
SO – Soil/Solid
SL – Sludge
GW – Ground Water
WW – Waste Water
OL – Oil
SU – Surface Water

PRESERVATIVE CODES:
NI – Nitric acid (HNO_3)
HA – Hydrochloric Acid (HCl)
SH – Sodium Hydroxide (NaOH)
ST – Sodium Thiosulfate
ZN – Zinc acetate
SA – Sulfuric Acid (H_2SO_4)
4C – 4°C
AA – Ascorbic Acid
NO – No preservative
SS – Sodium sulfite

SAMPLE CATEGORY = TC

KENTUCKY DIVISION OF WATER / DRINKING WATER BRANCH
BACTERIOLOGICAL ANALYSIS REPORT FORM

General Information – This Section To Be Completed By Collector

PWS ID: KY0183106

Compliance Period (MMYYYY): 062009

PWS Name: CRWD # 4

PWS Contact: Bill

Collection Date (MMDDYYYY): 06172009 (All Samples Reported on this Form were Collected on this Date.)

PWS Address: 69 Marguerite New Concord Ky 42076

PWS Phone: 270-436-6304

Collector Name: William Duncan 6-17-09 (Signature/Date)

General Information – This Section To Be Completed By Lab

Lab ID: 00031

Lab Receipt Date (MMDDYYYY): 06172009

Total Coliform Analysis Method Code: 328

Analysis Date (MMDDYYYY): 06172009

E Coli Analysis Method Code:

Lab Analyst: Mindy Martin 6/18/09 (Signature/Date)

Lab Supervisor: (Signature/Date)

Sample Information – This Section To Be Completed By Collector

Sample Type (RT, RP, or SP) (See Key)	Special Sample Reason (A, B, C, D, or E) (See Key)	Replacement Sample? (Y or Blank)	Location Code (See Instructions)	Repeat Location Code (DN, UP, or OR) (See Key)	Sample Time (24 hr)	Free Chlorine (Required for all disinfectants except Chloramine)	Total Chlorine (Required when disinfectant is Chloramine)
RT			003		0800	1.12	1.19

Analysis Information – This Section To Be Completed By Lab

Lab Sample Number	Analysis Time (24 hr)	Result (Total Coliform Count - or - TNTC - or - CNFG) (See Key)	Total Coliform (P/A)	E Coli (P/A)	Lab Sample Number of Original Sample (Required for Repeat and/or Replacement Samples) (See Instructions)
A617298	1520		A		

The signatories of this form certify by their signatures that collection and analysis of the water sample analyzed and the resulting data hereby submitted, were completed in accordance with the provisions of 401 KAR Chapter 8, specifically including but not limited to 401 KAR 8:200, Section 1 and 401 KAR 8:040; and that the data submitted on this form is a true and accurate report of the results of collection and analysis performed pursuant to the above-referenced regulations. Violations of 401 KAR Chapter 8 are subject to severe penalties prescribed in KRS 224.99-010, up to $25,000 fine per day per violation and in some cases a violation may subject the violator to prison.

BACTERIOLOGICAL ANALYSIS REPORT FROM KEY

Sample Type:	RT = Routine (For Compliance)	RP = Repeat (For Compliance)	SP = Special (Not for Compliance)
Special Sample Reason: (Only if Sample Type = SP)	A = Suspected Contamination B = New Plant, Modification, or Line Extension	C = Treatment Modification D = Study/Investigation	E = Line Break, Emergency Repair
Repeat Location Code:	DN = Downstream	UP = Upstream	OR = Original Site

McCoy & McCoy Laboratories, Inc.
www.mccoylabs.com

PO Box 907 * 825 Industrial Rd.
Madisonville, KY 42431
270.821.7375
270.825.9200 fax

2456 Fortune Dr., Suite 160
Lexington, KY 40509
859.299.7775
859.299.7785 fax

173 Island Creek Rd.
Pikeville, KY 41501
606.432.3104
606.432.3171 fax

1800 Kentucky Ave.
Paducah, KY 42003
270.444.6547
270.444.6572 fax

5510 Fern Valley Rd.
Suite 104 Promenade Pavilion
Louisville, KY 40228
502.961.0001

CHAIN OF CUSTODY and ANALYTICAL REQUEST

Please print legibly

SHADED AREA FOR LAB USE ONLY

Client:	Bill To:	Send Results to:	Compliance Monitoring (check one)? Yes ☐ No ☐ Samples Chlorinated (check one)? Yes ☐ No ☐	PO#
CRWD# 4			PWS ID# / STATE	
Phone/Email:	Phone/Email	Phone/Email:	MMLI Quote # (if applicable)	
Batch#	Project Name	Collected by (Signature): Bill		

Sample ID#	COLLECTION DATE	COLLECTION TIME (24 hr)	SAMPLE DESCRIPTION Composite samples indicate begin time, end time and temp (°C) at end time	SAMPLE ANALYSIS REQUESTED Method ID if known (i.e. 8260B, 6010B/7470A...)	SAMPLE REMARKS (i.e. composite, grab, field readings, corrosive...)	Field Data pH S.U.	Field Data Temp °C	# OF CONTAINERS	MATRIX CODE (See Lower Left)	PRESERVATIVE CODE (See Lower Left)
	6-17-09	0800	003	RT						

1. Expedited services not available for all services, please call. 2. Samples received unannounced with less than 48 hours holding time remaining may be subject to additional surcharges. 3. Lab reserves the right to return unused portions of samples to client.

Relinquished by: (Signature)	Received By: (Signature)	DATE	TIME (24 hr)
William Duncan	Derek Hall	6-17-09	0900
Relinquished by: (Signature)	Received by: (Signature)	DATE	TIME (24 hr)
Relinquished by: (Signature)	Received for MMLI by:	DATE	TIME (24 hr)

MATRIX CODES:
DW – Drinking Water
SW – Solid Waste
SO – Soil/Solid
SL – Sludge
GW – Ground Water
WW – Waste Water
OL – Oil
SU – Surface Water

PRESERVATIVE CODES:
NI – Nitric acid (HNO_3)
HA – Hydrochloric Acid (HCl)
SH – Sodium Hydroxide (NaOH)
ST – Sodium Thiosulfate
ZN – Zinc acetate
SA – Sulfuric Acid (H_2SO_4)
4C – 4°C
AA – Ascorbic Acid
NO – No preservative
SS – Sodium sulfite

CONDITIONS UPON RECEIPT (CHECK ONE)
☐ Iced wet/Blue ____ °C Temp
☐ Ambient ____ °C Temp ☐ N/A

	YES	NO	N/A
Custody seals present/intact?	☐	☐	☐
Broken containers?	☐	☐	☐
COC agree with sample Labels?	☐	☐	☐
Correct containers for testing?	☐	☐	☐
Headspace issues acceptable?	☐	☐	☐
Holding time(s) acceptable?	☐	☐	☐
Preservative pH's acceptable?	☐	☐	☐
Was pH left unadjusted?	☐	☐	☐
All samples listed on COC received?	☐	☐	☐
Samples properly preserved?	☐	☐	☐
Client's sample documents received?	☐	☐	☐
COC been relinquished?	☐	☐	☐
Are tests listed for each sample?	☐	☐	☐

Method of Shipment (check one): UPS ☐ FedEx ☐ MMLI ☐ US Postal ☐ Client ☐
Date Shipped:
Airbill#:
Logged in by: Location:
LAB NOTES:
Follow up action required: YES ☐ NO ☐
Client informed on:
Client Rep.:
By:
Reviewed by:
Date:

McCoy & McCoy Laboratories, Inc.
P. O. Box 907
Madisonville, KY 42431
www.mccoylabs.com

Chain of Custody

Lexington KY 859-299-7775
Paducah KY 270-444-6547
Louisville KY 502-961-0001
Madisonville KY 270-821-7375
Pikeville KY 606-432-3104

Route: 54 Project SDWA

Collected by: BJ

Collection Date: 6-17-09

Collection Time: 0630

Center Ridge Water Dist #2
Attn: William Duncan
69 Marguerite Blvd
Newconcord KY 42076

P. O. No:

Phone/Fax: 270-436-6304

CE648514 Center Ridge WD #2 RAD 0180509

Logbatch

Composite Sample Start Date Time

Sample Nos

Stop Date Time

Field Date By: Date Time Fecal Date Time

pH Meter#: pH: DO Meter#: DO:

Temp: Cl: Flow: Units: Matrix: Liquid

Collection Method	Test	Analysis Requested	Bottle Type and Preservative
G / C	RAD228_1	Radium 228	1 Liter Plastic Nitric Acid 4 c
G / C	ALPHA_1	Gross Alpha - SDWA	1 Liter Plastic Nitric Acid 4 c
G / C	SHIP13_1	UPS Shipping Charge	
G / C	RAD228_SHIP_1	Radium 228 Date sent to sub	
G / C	ALPHA_SHIP_1	Gross Alpha - SDWA Date shipped to	

Relinquished by: William Duncan Date/Time: 6-17-09 0900

Received by: Date/Time: 6/24/09 1630

Relinquished by: Date/Time:

Received by: Date/Time:

Relinquished by: Date/Time:

Received by: Date/Time:

SAMPLE CATEGORY = TC

KENTUCKY DIVISION OF WATER / DRINKING WATER BRANCH
BACTERIOLOGICAL ANALYSIS REPORT FORM

General Information – This Section To Be Completed By Collector

PWS ID: KY0180549

PWS Name: CRWD # 1

PWS Contact: Bill

PWS Address: 69 Marguerite New Concord Ky 42076

PWS Phone: 270-436-6304

Compliance Period (MMYYYY): 012009

Collection Date (MMDDYYYY): 06242009
(All Samples Reported on this Form were Collected on this Date.)

Collector Name: William Duncan 6-24-09
Signature/Date

General Information – This Section To Be Completed By Lab

Lab ID: 00051

Lab Receipt Date (MMDDYYYY): 06262009

Analysis Date (MMDDYYYY): 06262009

Total Coliform Analysis Method Code: 378

E Coli Analysis Method Code:

Lab Analyst: Mindy Martinez 6/25/09
Signature/Date

Lab Supervisor: 6/25/09
Signature/Date

Sample Information – This Section To Be Completed By Collector

Sample Type (RT, RP, or SP) (See Key)	Special Sample Reason (A, B, C, D, or E) (See Key)	Replacement Sample? (Y or Blank)	Location Code (See Instructions)	Repeat Location Code (DN, UP, or OR) (See Key)	Sample Time (24 hr)	Free Chlorine (Required for all disinfectants except Chloramine)	Total Chlorine (Required when disinfectant is Chloramine)
RT			009		0730	1.13	1.19

Analysis Information – This Section To Be Completed By Lab

Lab Sample Number	Analysis Time (24 hr)	Result (Total Coliform Count - or - TNTC - or - CNFG) (See Key)	Total Coliform (P/A)	E Coli (P/A)	Lab Sample Number of Original Sample (Required for Repeat and/or Replacement Samples) (See Instructions)
657171	1200		A		

The signatories of this form certify by their signatures that collection and analysis of the water sample analyzed and the resulting data hereby submitted, were completed in accordance with the provisions of 401 KAR Chapter 8, specifically including but not limited to 401 KAR 8:200, Section 1 and 401 KAR 8:040; and that the data submitted on this form is a true and accurate report of the results of collection and analysis performed pursuant to the above-referenced regulations. Violations of 401 KAR Chapter 8 are subject to severe penalties prescribed in KRS 224.99-010, up to $25,000 fine per day per violation and in some cases a violation [illegible]

BACTERIOLOGICAL ANALYSIS REPORT FROM KEY

Sample Type:	RT = Routine (For Compliance)	RP = Repeat (For Compliance)	SP = Special (Not for Compliance)
Special Sample Reason: (Only If Sample Type = SP)	A = Suspected Contamination B = New Plant, Modification, or Line Extension	C = Treatment Modification D = Study/Investigation	E = Line Break, Emergency Repair
Repeat Location Code: [illegible]	DN = Downstream	UP = Upstream	OR = Original Site

McCoy & McCoy Laboratories, Inc.
www.mccoylabs.com

PO Box 907 * 825 Industrial Rd.
Madisonville, KY 42431
270.821.7375
270.825.9200 fax

2456 Fortune Dr., Suite 160
Lexington, KY 40509
859.299.7775
859.299.7785 fax

173 Island Creek Rd.
Pikeville, KY 41501
606.432.3104
606.432.3171 fax

1800 Kentucky Ave.
Paducah, KY 42003
270.444.6547
270.444.6572 fax

5510 Fern Valley Rd.
Suite 104 Promenade Pavilion
Louisville, KY 40228
502.961.0001

SHADED AREA FOR LAB USE ONLY

CHAIN OF CUSTODY and ANALYTICAL REQUEST

Please print legibly.

Client: CRWD # 1	Bill To:	Send Results to:	Compliance Monitoring (check one)? Yes ☐ No ☐ Samples Chlorinated (check one)? Yes ☐ No ☐	PO#
Phone/Email:	Phone/Email	Phone/Email:	PWS ID#	STATE
Batch#	Project Name	Collected by (Signature): Bill	MMLI Quote # (if applicable)	

Sample ID#	COLLECTION DATE	TIME (24 hr)	SAMPLE DESCRIPTION Composite samples indicate begin time, end time and temp (°C) at end time	SAMPLE ANALYSIS REQUESTED Method ID if known (i.e. 8260B, 6010B/7470A...)	SAMPLE REMARKS (i.e. composite, grab, field readings, corrosive...)	Field Data pH S.U.	Field Data Temp °C	# OF CONTAINERS	MATRIX CODE (See Lower Left)	PRESERVATIVE CODE (See Lower Left)
	6-24-09	0730	003	RT						

1. Expedited services not available for all services, please call. 2. Samples received unannounced with less than 48 hours holding time remaining may be subject to additional surcharges. 3. Lab reserves the right to return unused portions of samples to client.

Relinquished by: (Signature)	Received By: (Signature)	DATE	TIME (24 hr)
William Duncan	Dick Black	6-24-09	0900
Relinquished by: (Signature)	Received by: (Signature)	DATE	TIME (24 hr)
Relinquished by: (Signature)	Received for MMLI by:	DATE	TIME (24 hr)

CONDITIONS UPON RECEIPT (CHECK ONE)
☐ Iced wet/Blue ____ °C Temp
☐ Ambient ____ °C Temp ☐ N/A

	YES	NO	N/A
Custody seals present/intact?	☐	☐	☐
Broken containers?	☐	☐	☐
COC agree with sample Labels?	☐	☐	☐
Correct containers for testing?	☐	☐	☐
Headspace issues acceptable?	☐	☐	☐
Holding time(s) acceptable?	☐	☐	☐
Preservative pH's acceptable?	☐	☐	☐
Was pH left unadjusted?	☐	☐	☐
All samples listed on COC received?	☐	☐	☐
Samples properly preserved?	☐	☐	☐
Client's sample documents received?	☐	☐	☐
COC been relinquished?	☐	☐	☐
Are tests listed for each sample?	☐	☐	☐

Method of Shipment (check one) UPS ☐ FedEx ☐ MMLI ☐ US Postal ☒ Client ☒
Date Shipped:
Airbill#:
Logged in by: ____ Location: ____
LAB NOTES
Follow up action required: YES ☐ NO ☐
Client informed on: / /
Client Rep.
By:
Reviewed by:
Date: / /

MATRIX CODES:
DW – Drinking Water
SW – Solid Waste
SO – Soil/Solid
SL – Sludge
GW – Ground Water
WW – Waste Water
OL – Oil
SU – Surface Water

PRESERVATIVE CODES:
NI – Nitric acid (HNO_3)
HA – Hydrochloric Acid (HCl)
SH – Sodium Hydroxide (NaOH)
ST – Sodium Thiosulfate
ZN – Zinc acetate
SA – Sulfuric Acid (H_2SO_4)
4C – 4°C
AA – Ascorbic Acid
NO – No preservative
SS – Sodium sulfite

SAMPLE CATEGORY = TC

KENTUCKY DIVISION OF WATER / DRINKING WATER BRANCH
BACTERIOLOGICAL ANALYSIS REPORT FORM

General Information – This Section To Be Completed By Collector

PWS ID: KY0180507

PWS Name: CRWD # 2

PWS Address: 69 Marguerite New Concord Ky 42076

PWS Contact: Bill

PWS Phone: 270-436-6304

Compliance Period (MMYYYY): 062009

Collection Date (MMDDYYYY): 06242009
(All Samples Reported on this Form were Collected on this Date.)

Collector Name: William Duncan 6-24-09
Signature/Date

General Information – This Section To Be Completed By Lab

Lab ID: 0002

Lab Receipt Date (MMDDYYYY): 06240009

Analysis Date (MMDDYYYY): 06240009

Total Coliform Analysis Method Code: 027

E Coli Analysis Method Code:

Lab Analyst: Mindy Martinez 6/25/09
Signature/Date

Lab Supervisor: [signature] 6/25/09
Signature/Date

Sample Information – This Section To Be Completed By Collector

Sample Type (RT, RP, or SP) (See Key)	Special Sample Reason (A, B, C, D, or E) (See Key)	Replacement Sample? (Y or Blank)	Location Code (See Instructions)	Repeat Location Code (DN, UP, or OR) (See Key)	Sample Time (24 hr)	Free Chlorine (Required for all disinfectants except Chloramine)	Total Chlorine (Required when disinfectant is Chloramine)
RT			603		0630	1.31	1.36

Analysis Information – This Section To Be Completed By Lab

Lab Sample Number	Analysis Time (24 hr)	Result (Total Coliform Count - or - TNTC - or - CNFG) (See Key)	Total Coliform (P/A)	E Coli (P/A)	Lab Sample Number of Original Sample (Required for Repeat and/or Replacement Samples) (See Instructions)
A579172	1200		A		

The signatories of this form certify by their signatures that collection and analysis of the water sample analyzed and the resulting data hereby submitted, were completed in accordance with the provisions of 401 KAR Chapter 8, specifically including but not limited to 401 KAR 8:200, Section 1 and 401 KAR 8:040; and that the data submitted on this form is a true and accurate report of the results of collection and analysis performed pursuant to the above-referenced regulations. Violations of 401 KAR Chapter 8 are subject to severe penalties prescribed in KRS 224.99-010, up to $25,000 fine per day per violation and in some cases a violation may subject the violator to prison.

BACTERIOLOGICAL ANALYSIS REPORT FROM KEY

Sample Type:	RT = Routine (For Compliance)	RP = Repeat (For Compliance)	SP = Special (Not for Compliance)
Special Sample Reason: (Only if Sample Type = SP)	A = Suspected Contamination B = New Plant, Modification, or Line Extension	C = Treatment Modification D = Study/Investigation	E = Line Break, Emergency Repair
Repeat Location Code: (Only if Sample Type = RP)	DN = Downstream	UP = Upstream	OR = Original Site

McCoy & McCoy Laboratories, Inc.
www.mccoylabs.com

PO Box 907 * 825 Industrial Rd.
Madisonville, KY 42431
270.821.7375
270.825.9200 fax

2456 Fortune Dr., Suite 160
Lexington, KY 40509
859.299.7775
859.299.7785 fax

173 Island Creek Rd.
Pikeville, KY 41501
606.432.3104
606.432.3171 fax

1800 Kentucky Ave.
Paducah, KY 42003
270.444.6547
270.444.6572 fax

5510 Fern Valley Rd.
Suite 104 Promenade Pavilion
Louisville, KY 40228
502.961.0001

SHADED AREA FOR LAB USE ONLY

CHAIN OF CUSTODY and ANALYTICAL REQUEST

Please print legibly.

Client:	Bill To:	Send Results to:	Compliance Monitoring (check one)? Yes ☐ No ☐	PO#
C.R.W.D #2			Samples Chlorinated (check one)? Yes ☐ No ☐	
Phone/Email:	Phone/Email	Phone/Email:	PWS ID# / STATE	
Batch#	Project Name	Collected by (Signature): Bill	MMLI Quote # (if applicable)	

Sample ID#	COLLECTION DATE	COLLECTION TIME (24 hr)	SAMPLE DESCRIPTION Composite samples indicate begin time, end time and temp (°C) at end time	SAMPLE ANALYSIS REQUESTED Method ID if known (i.e. 8260B, 6010B/7470A...)	SAMPLE REMARKS (i.e. composite, grab, field readings, corrosive...)	Field Data pH S.U.	Field Data Temp °C	# OF CONTAINERS	MATRIX CODE (See Lower Left)	PRESERVATIVE CODE (See Lower Left)
	6-24-09	06:30	003	RT						

1. Expedited services not available for all services, please call. 2. Samples received unannounced with less than 48 hours holding time remaining may be subject to additional surcharges. 3. Lab reserves the right to return unused portions of samples to client.

Relinquished by: (Signature)	Received By: (Signature)	DATE	TIME (24 hr)
William [signature]	Derek [signature]	6-24-09	09:00
Relinquished by: (Signature)	Received by: (Signature)	DATE	TIME (24 hr)
Relinquished by: (Signature)	Received for MMLI by:	DATE	TIME (24 hr)

MATRIX CODES:
DW – Drinking Water
SW – Solid Waste
SO – Soil/Solid
SL – Sludge
GW – Ground Water
WW – Waste Water
OL – Oil
SU – Surface Water

PRESERVATIVE CODES:
NI – Nitric acid (HNO_3)
HA – Hydrochloric Acid (HCl)
SH – Sodium Hydroxide (NaOH)
ST – Sodium Thiosulfate
ZN – Zinc acetate
SA – Sulfuric Acid (H_2SO_4)
4C – 4°C
AA – Ascorbic Acid
NO – No preservative
SS – Sodium sulfite

CONDITIONS UPON RECEIPT (CHECK ONE):
☐ Iced wet/Blue ____ °C Temp
☐ Ambient ____ °C Temp ☐ N/A

	YES	NO	N/A
Custody seals present/intact?	☐	☐	☐
Broken containers?	☐	☐	☐
COC agree with sample Labels?	☐	☐	☐
Correct containers for testing?	☐	☐	☐
Headspace issues acceptable?	☐	☐	☐
Holding time(s) acceptable?	☐	☐	☐
Preservative pH's acceptable?	☐	☐	☐
Was pH left unadjusted?	☐	☐	☐
All samples listed on COC received?	☐	☐	☐
Samples properly preserved?	☐	☐	☐
Client's sample documents received?	☐	☐	☐
COC been relinquished?	☐	☐	☐
Are tests listed for each sample?	☐	☐	☐

Method of Shipment (check one): US Postal ☐ UPS ☐ FedEx ☐ MMLI ☐ Client ☐
Date Shipped:
Airbill#
Logged in by: Location:
LAB NOTES:
Follow up action required: YES ☐ NO ☐
Client informed on: / /
Client Rep:
By:
Reviewed by:
Date: / /

McCoy & McCoy Laboratories, Inc.
P.O. Box 907
Madisonville, KY 42431
(270) 821-7375
www.mccoylabs.com

Paducah, KY
(270) 444-6547
Lexington, KY
(859) 299-7775
Louisville, KY
(502) 961-0001
Pikeville, KY
(606) 432-3104

m.demoss@mccoylabs.com

Center Ridge Water Dist #2
Attn: William Duncan
69 Marguerite Blvd
Newconcord KY 42076

Batch #	09062362
Received	06/24/2009
Reported	07/24/2009
Client	CE6485
Page	1 of 1

ANALYSIS REPORT

AG78785 TPA Plant Tap Collected: 06/17/2009 06:30

TEST DESCRIPTION	ANALYZED	BY	METHOD	RESULT	UNITS	REPORT LIMIT	NOTE
Gross Alpha - SDWA	07/09/2009	KNL	EPA 900.0**	1.2 ± 0.6	pCi/l		
Radium 228	07/14/2009	KNL	EPA 903.0**	0.6 ± 0.7	pCi/l		

Submitted By: Mark DeMoss

Mark DeMoss, SDW Coordinator

The analyses reported above have been determined by protocols that meet or exceed the requirements of NELAC. Methods listed with an '*' are not part of this accreditation. Call Mark DeMoss at 270-821-7375 for any questions concerning this analysis report.

SAMPLE CATEGORY = RA
ENTRY POINT SAMPLING

KENTUCKY DIVISION OF WATER / DRINKING WATER BRANCH
RADIONUCLIDES ANALYSIS REPORT FORM

Rev. 01/15/2006

This Section To Be Completed By Collector

PWS ID: KY 0180509 | Plant ID: A | Plant Name: CENTER RIDGE WTP #2 | Location Code: TPA

PWS Name: CENTER RIDGE WATER DISTRICT #2 | PWS Contact: WILLIAM M DUNCAN

PWS Address: 331 MORRIS RD., DEXTER, KY 42036 | PWS Phone: 270-474-8967

Sample Date (MMDDYYYY): 06172009 | Time: 0630 | Sample Type: RT (RT = Routine (For Compliance); SP = Special (Not for Compliance)) | Collector Name: BILL DUNCAN | Signature/Date

This Section To Be Completed By Lab

Lab ID: 90033 | Lab Sample Number: 095405 | Lab Phone: (813) 229-2879

Lab Analyst: [signature] 7-14-09 (Signature/Date) | Lab Supervisor: [signature] 7-16-09 (Signature/Date)

Analyte Code	Analyte Name	Analysis Method Code	<	Result (pCi/L) -or- Lab Minimum Reporting Limit (pCi/L)	Analysis Date (MMDDYYYY)	Counting Error (+/-)
4000	GROSS ALPHA	756		1.2	07092009	0.6
4006	URANIUM			.		.
4010	COMBINED RADIUM			.		.
4020	RADIUM-226			.		.
4030	RADIUM-228	942		0.6	07142009	0.7
4044	POTASSIUM-40, TOTAL			.		.
4100	GROSS BETA			.		.
4101	MAN-MADE BETA PARTICLE AND PHOTON EMITTERS			.		.
4102	TRITIUM			.		.
4174	STRONTIUM-90			.		.
4264	IODINE-131			.		.
4270	CESIUM-134			.		.

The signatories of this form certify by their signatures that collection and analysis of the water sample analyzed and the resulting data hereby submitted, were completed in accordance with the provisions of 401 KAR Chapter 8; and that the data submitted on this form is a true and accurate report of the results of collection and analysis performed pursuant to the above-referenced regulations. Violations of 401 KAR Chapter 8 are subject to severe penalties prescribed in KRS 224.99-010, up to $25,000 fine per day per violation and in some cases a violation may subject the violator to prison.

FL DOH Certification #E84025
Kentucky Lab ID #90033

KNL LABORATORY SERVICES
2742 N. Florida Ave.
P.O. Box 1833
Tampa, Florida 33601
(813) 229-2879
Fax (813) 229-0002

Report Date: July 16, 2009

McCoy & McCoy Laboratories, Inc.
P.O. Box 907
Madisonville, KY 42431

Attn: Doug Wolfe

Field Custody: Client
Client/Field ID: AG78785

Sample Collection: 6-17-09/0630

Lab ID No: 09.5405
Lab Custody Date: 7-06-09/1130
Sample description: DW

CERTIFICATE OF ANALYSIS

Parameter	Units	Results			Analysis Date	Method	Detection Limit
Gross Alpha	pCi/l	1.2	±	0.6	07-09-09/0800	EPA 900.0	0.8
Radium-228	pCi/l	0.6	±	0.7	07-14-09/1020	EPA Ra-05	1.0

Alpha Standard: Th-230

James W. Hayes

James W. Hayes
Laboratory Manager

Test results meet all requirements of the NELAC and EPA drinking water standard operating and analytical method procedures. Test results refer only to sample(s) listed. Contact person: Jim Hayes (813) 229-2879

McCoy & McCoy Laboratories, Inc.
www.mccoylabs.com

PO Box 907 * 825 Industrial Rd
Madisonville, KY 42431
270.821.7375
270.825.9200 fax

2456 Fortune Dr., Suite 160
Lexington, KY 40509
859.299.7775
859.299.7785 fax

173 Island Creek Rd.
Pikeville, KY 41501
606.432.3104
606.432.3171 fax

1800 Kentucky Ave.
Paducah, KY 42003
270.444.6547
270.444.6572 fax

5510 Fern Valley Rd.
Suite 104 Promenade Pavilion
Louisville, KY 40228
502.961.0001

SHADED AREA FOR LAB USE ONLY

CHAIN OF CUSTODY and ANALYTICAL REQUEST

Please print legibly

Client:	Bill To:	Send Results to: Syd Tate	Compliance Monitoring (check one)? Yes ☐ No ☐ Samples Chlorinated (check one)? Yes ☐ No ☐	PO# 20160703
Phone/Email:	Phone/Email	Phone/Email:	PWS ID# / STATE	
Batch#	Project Name	Collected by (Signature): CLT	MMLI Quote # (if applicable)	

Sample ID#	COLLECTION DATE	TIME (24 hr)	SAMPLE DESCRIPTION Composite samples indicate begin time, end time and temp (°C) at end time	SAMPLE ANALYSIS REQUESTED Method ID if known (i.e. 8260B, 6010B/7470A...)	SAMPLE REMARKS (i.e. composite, grab, field readings, corrosive...)	Field Data pH S.U.	Field Data Temp °C	# OF CONTAINERS	MATRIX CODE (See Lower Left)	PRESERVATIVE CODE (See Lower Left)
	6/17/09	0630	AG78785	RAD228, Gross Alpha	Grab			2		
			09-5405							
			* please Report on State Form							

1. Expedited services not available for all services, please call. 2. Samples received unannounced with less than 48 hours holding time remaining may be subject to additional surcharges. 3. Lab reserves the right to return unused portions of samples to client.

Relinquished by: (Signature)	Received By: (Signature)	DATE	TIME (24 hr)
Mindy Martin		7/1/09	1600
Relinquished by: (Signature)	Received by: (Signature) Ramonday KWL	7-6-09	1130
Relinquished by: (Signature)	Received for MMLI by:	DATE	TIME (24 hr)

CONDITIONS UPON RECEIPT (CHECK ONE)
☐ Iced wet/Blue ____ °C Temp
☐ Ambient ____ °C Temp ☐ N/A

	YES	NO	N/A
Custody seals present/intact?	☐	☐	☐
Broken containers?	☐	☐	☐
COC agree with sample Labels?	☐	☐	☐
Correct containers for testing?	☐	☐	☐
Headspace issues acceptable?	☐	☐	☐
Holding time(s) acceptable?	☐	☐	☐
Preservative pH's acceptable?	☐	☐	☐
Was pH left unadjusted?	☐	☐	☐
All samples listed on COC received?	☐	☐	☐
Samples properly preserved?	☐	☐	☐
Client's sample documents received?	☐	☐	☐
COC been relinquished?	☐	☐	☐
Are tests listed for each sample?	☐	☐	☐

Method of Shipment (check one): US Postal ☐ UPS ☐ FedEx ☐ MMLI ☐ Client ☐
Date Shipped:
Airbill#:
Logged in by: Location:
LAB NOTES:
Follow up action required: YES ☐ NO ☐
Client informed on: / /
Client Rep:
By:
Reviewed by:
Date: / /

MATRIX CODES:
DW – Drinking Water
GW – Ground Water
SW – Solid Waste
WW – Waste Water
SO – Soil/Solid
OL – Oil
SL – Sludge
SU – Surface Water

PRESERVATIVE CODES:
NI – Nitric acid (HNO_3)
SA – Sulfuric Acid (H_2SO_4)
HA – Hydrochloric Acid (HCl)
4C – 4°C
SH – Sodium Hydroxide (NaOH)
AA – Ascorbic Acid
ST – Sodium Thiosulfate
NO – No preservative
ZN – Zinc acetate
SS – Sodium sulfite

McCoy & McCoy Laboratories, Inc.
P. O. Box 907
Madisonville, KY 42431
www.mccoylabs.com

Chain of Custody

Lexington KY 859-209-7775
Madisonville KY 270-821-7375
Paducah KY 270-444-6547
Pikeville KY 606-432-3104
Louisville KY 502-961-0001

Route: 54 Project: SDWA

Collected by: [illegible]

Collection Date: 6-17-09

Collection Time: 0630

Center Ridge Water Dist #2
Attn: William Duncan
69 Marguerite Blvd
Newconcord KY 42076

P. O. No.

PhoneFax: 270-436-6304

CE648514 Center Ridge WD #2 RAD 0180509 TPA

Logbatch 09062362

Composite Sample Start Date Time

Sample Nos AG78785

Stop Date Time

Field Data By: Date Time Fecal Date Time

pH Meter#: pH: DC Meter#: DC:

Temp. Cl: Flow: Units: Matrix: Liquid

Collection Method	Test	Analysis Requested	Bottle Type and Preservative
G / C	RAD228_1	Radium 228	1 Liter Plastic Nitric Acid 4 c
G / C	ALPHA_1	Gross Alpha - SDWA	1 Liter Plastic Nitric Acid 4 c
G / C	SHIP13_1	UPS Shipping Charge	
G / C	RAD228_SHIP_1	Radium 228 Date sent to sub	
G / C	ALPHA_SHIP_1	Gross Alpha - SDWA Date shipped to	

Relinquished by: William Duncan Date/Time: 6-17-09 0900

Received by: Derek [illegible] Date/Time: 6/24/09 1030

Relinquished by: Derek [illegible] Date/Time: 6/24/09 1200

Received by: Mindy Martin Date/Time: 6/24/09 1200

Relinquished by: Date/Time:

Received by: Date/Time:

McCoy & McCoy Laboratories, Inc.
P.O. Box 907
Madisonville, KY 42431
270-821-7375

SAMPLE ACCEPTANCE/CONDITION CHECKLIST

Client: Center Ridge Logbatch No.: D906236 Lab No.: AG78785

Sample Delivery Type (circle): US Postal UPS FedEx MMLI Client _____

Sample Receipt Checklist:

	YES	NO
a. Were custody seals used on outer package, and/or sample containers?	____	✓
b. Were sample containers received damaged?	____	✓
c. Cooler Temp. 4°C (circle) Acceptable Unacceptable		
d. Were the samples accompanied with a Chain-of-Custody or other transferable document?	✓	____
e. Was all information recorded to defend the sample transfer & submittal?	✓	____
f. Is each sample and container uniquely identified on the COC?	✓	____
g. Were all samples in appropriate containers?	✓	____
h. Did all samples have appropriate volumes?	✓	____
i. Were all samples submitted within sample holding times?	✓	____
j. Were "Collection Methods" recorded?	✓	____
k. Were "Flow Units" recorded?	____	✓

Logged In By: MMM Date: 6/24/09

Exceptions:

Action Required:

_____Client Informed on ____/____/____ Client Rep:_____By:_____

_____No Action Required, see notes

_____No Action Required

Reviewed By: BKH Project Manager Date: 6/26/09

Q:\MADISONVILLE\ADMIN\Forms & Labels\Sample Checklist.doc

SAMPLE CATEGORY = TC

KENTUCKY DIVISION OF WATER / DRINKING WATER BRANCH
BACTERIOLOGICAL ANALYSIS REPORT FORM

General Information – This Section To Be Completed By Collector

PWS ID: KY0180508

PWS Name: CRWD # 3

PWS Address: 69 Marguerite New Concord Ky 42076

PWS Contact: Bill

PWS Phone: 270-436-6304

Compliance Period (MMYYYY): 062009

Collection Date (MMDDYYYY): 06242009
(All Samples Reported on this Form were Collected on this Date.)

Collector Name: William Duncan 6-24-09
Signature/Date

General Information – This Section To Be Completed By Lab

Lab ID: 00001

Lab Receipt Date (MMDDYYYY): 06242009

Analysis Date (MMDDYYYY): 06242009

Total Coliform Analysis Method Code: 998

E Coli Analysis Method Code:

Lab Analyst: Mindy Martin 6/25/09
Signature/Date

Lab Supervisor: [signature] 6/25/09
Signature/Date

Sample Information – This Section To Be Completed By Collector

Sample Type (RT, RP, or SP) (See Key)	Special Sample Reason (A, B, C, D, or E) (See Key)	Replacement Sample? (Y or Blank)	Location Code (See Instructions)	Repeat Location Code (DN, UP, or OR) (See Key)	Sample Time (24 hr)	Free Chlorine (Required for all disinfectants except Chloramine)	Total Chlorine (Required when disinfectant is Chloramine)
RT			053		0600	1.36	1.41

Analysis Information – This Section To Be Completed By Lab

Lab Sample Number	Analysis Time (24 hr)	Result (Total Coliform Count - or - TNTC - or - CNFG) (See Key)	Total Coliform (P/A)	E Coli (P/A)	Lab Sample Number of Original Sample (Required for Repeat and/or Replacement Samples) (See Instructions)
A6791124	1200		A		

The signatories of this form certify by their signatures that collection and analysis of the water sample analyzed and the resulting data hereby submitted, were completed in accordance with the provisions of 401 KAR Chapter 8, specifically including but not limited to 401 KAR 8:200, Section 1 and 401 KAR 8:040; and that the data submitted on this form is a true and accurate report of the results of collection and analysis performed pursuant to the above-referenced regulations. Violations of 401 KAR Chapter 8 are subject to severe penalties prescribed in KRS 224.99-010, up to $25,000 fine per day per violation and in some cases a violation may subject the violator to prison.

BACTERIOLOGICAL ANALYSIS REPORT FROM KEY

Sample Type:	RT = Routine (For Compliance)	RP = Repeat (For Compliance)	SP = Special (Not for Compliance)
Special Sample Reason: (Only if Sample Type = SP)	A = Suspected Contamination B = New Plant, Modification, or Line Extension	C = Treatment Modification D = Study/Investigation	E = Line Break, Emergency Repair
Repeat Location Code: (Only if Sample Type = RP)	DN = Downstream	UP = Upstream	OR = Original Site

McCoy & McCoy Laboratories, Inc.
www.mccoylabs.com

PO Box 907 * 825 Industrial Rd.
Madisonville, KY 42431
270.821.7375
270.825.9200 fax

2456 Fortune Dr., Suite 160
Lexington, KY 40509
859.299.7775
859.299.7785 fax

173 Island Creek Rd.
Pikeville, KY 41501
606.432.3104
606.432.3171 fax

1800 Kentucky Ave.
Paducah, KY 42003
270.444.6547
270.444.6572 fax

5510 Fern Valley Rd.
Suite 104 Promenade Pavilion
Louisville, KY 40228
502.961.0001

SHADED AREA FOR LAB USE ONLY

CHAIN OF CUSTODY and ANALYTICAL REQUEST

Please print legibly

Client:	Bill To:	Send Results to:	Compliance Monitoring (check one)? Yes ☐ No ☐ Samples Chlorinated (check one)? Yes ☐ No ☐	PO#
C.L.W.D #3				
Phone/Email:	Phone/Email	Phone/Email:	PWS ID# / STATE	
Batch#	Project Name	Collected by (Signature): Bell	MMLI Quote # (if applicable)	

Sample ID#	COLLECTION DATE	COLLECTION TIME (24 hr)	SAMPLE DESCRIPTION Composite samples indicate begin time, end time and temp (°C) at end time	SAMPLE ANALYSIS REQUESTED Method ID if known (i.e. 8260B, 6010B/7470A...)	SAMPLE REMARKS (i.e. composite, grab, field readings, corrosive...)	Field Data pH S.U.	Field Data Temp °C	# OF CONTAINERS	MATRIX CODE (See Lower Left)	PRESERVATIVE CODE (See Lower Left)
	4-24-09	06:00	003	RT						

1. Expedited services not available for all services, please call. 2. Samples received unannounced with less than 48 hours holding time remaining may be subject to additional surcharges. 3. Lab reserves the right to return unused portions of samples to client.

Relinquished by: (Signature)	Received By: (Signature)	DATE	TIME (24 hr)
William Bruce	[signature]	4-24-09	09:00
Relinquished by: (Signature)	Received by: (Signature)	DATE	TIME (24 hr)
Relinquished by: (Signature)	Received for MMLI by:	DATE	TIME (24 hr)

CONDITIONS UPON RECEIPT (CHECK ONE)
☐ Iced wet/Blue °C Temp
☐ Ambient °C Temp ☐ N/A

	YES	NO	N/A
Custody seals present/intact?	☐	☐	☐
Broken containers?	☐	☐	☐
COC agree with sample Labels?	☐	☐	☐
Correct containers for testing?	☐	☐	☐
Headspace issues acceptable?	☐	☐	☐
Holding time(s) acceptable?	☐	☐	☐
Preservative pH's acceptable?	☐	☐	☐
Was pH left unadjusted?	☐	☐	☐
All samples listed on COC received?	☐	☐	☐
Samples properly preserved?	☐	☐	☐
Client's sample documents received?	☐	☐	☐
COC been relinquished?	☐	☐	☐
Are tests listed for each sample?	☐	☐	☐

Method of Shipment (check one): US Postal ☐ UPS ☐ FedEx ☐ MMLI ☐ Client ☐
Date Shipped:
Airbill #:
Logged in by: Location:
LAB NOTES:
Follow-up action required: YES ☐ NO ☐
Client informed on:
Client Rep:
By:
Reviewed by:
Date:

MATRIX CODES:
DW – Drinking Water
GW – Ground Water
SW – Solid Waste
WW – Waste Water
SO – Soil/Solid
OL – Oil
SL – Sludge
SU – Surface Water

PRESERVATIVE CODES:
NI – Nitric acid (HNO_3)
HA – Hydrochloric Acid (HCl)
SH – Sodium Hydroxide (NaOH)
ST – Sodium Thiosulfate
ZN – Zinc acetate
SA – Sulfuric Acid (H_2SO_4)
4C – 4°C
AA – Ascorbic Acid
NO – No preservative
SS – Sodium sulfite

SAMPLE CATEGORY = TC

KENTUCKY DIVISION OF WATER / DRINKING WATER BRANCH
BACTERIOLOGICAL ANALYSIS REPORT FORM

General Information – This Section To Be Completed By Collector

PWS ID: KY0118306

PWS Name: CRWD # 4

PWS Contact: Bill

PWS Address: 69 Marguerite Ln Concord Ky 42076

PWS Phone: 270-436-6304

Compliance Period (MMYYYY): 062009

Collection Date (MMDDYYYY): 06 24 2009
(All Samples Reported on this Form were Collected on this Date.)

Collector Name: William Duncan 6-24-09
Signature/Date

General Information – This Section To Be Completed By Lab

Lab ID: 0005

Lab Receipt Date (MMDDYYYY): 06 24 0009

Analysis Date (MMDDYYYY): 06 24 0009

Total Coliform Analysis Method Code: 009

E Coli Analysis Method Code:

Lab Supervisor: [illegible]
Signature/Date

Lab Analyst: Mindy Martin 6/25/09
Signature/Date

Sample Information – This Section To Be Completed By Collector

Sample Type (RT, RP, or SP) (See Key)	Special Sample Reason (A, B, C, D, or E) (See Key)	Replacement Sample? (Y or Blank)	Location Code (See Instructions)	Repeat Location Code (DN, UP, or OR) (See Key)	Sample Time (24 hr)	Free Chlorine (Required for all disinfectants except Chloramine)	Total Chlorine (Required when disinfectant is Chloramine)
RT			013		0805	1.95	1.31

Analysis Information – This Section To Be Completed By Lab

Lab Sample Number	Analysis Time (24 hr)	Result (Total Coliform Count - or - TNTC - or - CNFG) (See Key)	Total Coliform (P/A)	E Coli (P/A)	Lab Sample Number of Original Sample (Required for Repeat and/or Replacement Samples) (See Instructions)
A5791960	1200		A		

The signatories of this form certify by their signatures that collection and analysis of the water sample analyzed and the resulting data hereby submitted, were completed in accordance with the provisions of 401 KAR Chapter 8, specifically including but not limited to 401 KAR 8:200, Section 1 and 401 KAR 8:040; and that the data submitted on this form is a true and accurate report of the results of collection and analysis performed pursuant to the above-referenced regulations. Violations of 401 KAR Chapter 8 are subject to severe penalties prescribed in KRS 224.99-010, up to $25,000 fine per day per violation and in some cases a violation may subject the violator to prison.

BACTERIOLOGICAL ANALYSIS REPORT FROM KEY

Sample Type:	RT = Routine (For Compliance)	RP = Repeat (For Compliance)	SP = Special (Not for Compliance)
Special Sample Reason: (Only if Sample Type = SP)	A = Suspected Contamination B = New Plant, Modification, or Line Extension	C = Treatment Modification D = Study/Investigation	E = Line Break, Emergency Repair
Repeat Location Code:	DN = Downstream	UP = Upstream	OR = Original Site

McCoy & McCoy Laboratories, Inc.
www.mccoylabs.com

PO Box 907 * 825 Industrial Rd.
Madisonville, KY 42431
270.821.7375
270.825.9200 fax

2456 Fortune Dr., Suite 160
Lexington, KY 40509
859.299.7775
859.299.7785 fax

173 Island Creek Rd.
Pikeville, KY 41501
606.432.3104
606.432.3171 fax

1800 Kentucky Ave.
Paducah, KY 42003
270.444.6547
270.444.6572 fax

5510 Fern Valley Rd.
Suite 104 Promenade Pavilion
Louisville, KY 40228
502.961.0001

SHADED AREA FOR LAB USE ONLY

CHAIN OF CUSTODY and ANALYTICAL REQUEST

Please print legibly

Client: CRWDH 4	Bill To:	Send Results to:	Compliance Monitoring (check one)? Yes ☐ No ☐ Samples Chlorinated (check one)? Yes ☐ No ☐	PO#
Phone/Email:	Phone/Email	Phone/Email:	PWS ID# / STATE	
Batch#	Project Name	Collected by (Signature): Bill	MMLI Quote # (if applicable)	

Sample ID#	COLLECTION DATE	TIME (24 hr)	SAMPLE DESCRIPTION Composite samples indicate begin time, end time and temp (°C) at end time	SAMPLE ANALYSIS REQUESTED Method ID if known (i.e. 8260B, 6010B/7470A...)	SAMPLE REMARKS (i.e. composite, grab, field readings, corrosive...)	Field Data pH S.U.	Field Data Temp °C	# OF CONTAINERS	MATRIX CODE (See Lower Left)	PRESERVATIVE CODE (See Lower Left)
	5-20-09	0800	020	RT						

1. Expedited services not available for all services, please call. 2. Samples received unannounced with less than 48 hours holding time remaining may be subject to additional surcharges. 3. Lab reserves the right to return unused portions of samples to client.

Relinquished by: (Signature)	Received By: (Signature)	DATE	TIME (24 hr)
William Duncan	David Brock	5-20-09	0900
Relinquished by: (Signature)	Received by: (Signature)	DATE	TIME (24 hr)
Relinquished by: (Signature)	Received for MMLI by:	DATE	TIME (24 hr)

CONDITIONS UPON RECEIPT (CHECK ONE)
☐ Iced wet/Blue: ____ °C Temp
☐ Ambient: ____ °C Temp ☐ N/A

	YES	NO	N/A
Custody seals present/intact?	☐	☐	☐
Broken containers?	☐	☐	☐
COC agree with sample Labels?	☐	☐	☐
Correct containers for testing?	☐	☐	☐
Headspace issues acceptable?	☐	☐	☐
Holding time(s) acceptable?	☐	☐	☐
Preservative pH/s acceptable?	☐	☐	☐
Was pH left unadjusted?	☐	☐	☐
All samples listed on COC received?	☐	☐	☐
Samples properly preserved?	☐	☐	☐
Client's sample documents received?	☐	☐	☐
COC been relinquished?	☐	☐	☐
Are tests listed for each sample?	☐	☐	☐

Method of Shipment (check one): UPS ☐ FedEx ☐ MMLI ☐ US Postal ☐ Client ☐
Date Shipped:
Airbill #:
Logged in by: Location:
LAB NOTES:
Follow up action required: YES ☐ NO ☐
Client informed on:
Client Rep:
By:
Reviewed by:
Date:

MATRIX CODES:
DW – Drinking Water
SW – Solid Waste
SO – Soil/Solid
SL – Sludge
GW – Ground Water
WW – Waste Water
OL – Oil
SU – Surface Water

PRESERVATIVE CODES:
NI – Nitric acid (HNO_3)
HA – Hydrochloric Acid (HCl)
SH – Sodium Hydroxide (NaOH)
ST – Sodium Thiosulfate
ZN – Zinc acetate
SA – Sulfuric Acid (H_2SO_4)
4C – 4°C
AA – Ascorbic Acid
NO – No preservative
SS – Sodium sulfite

SAMPLE CATEGORY = TC

KENTUCKY DIVISION OF WATER / DRINKING WATER BRANCH
BACTERIOLOGICAL ANALYSIS REPORT FORM

General Information -- This Section To Be Completed By Collector

PWS ID: KY0180549

PWS Name: CRWD #1

PWS Contact: Bill

PWS Address: 69 Marguerite New Concord Ky 42076

PWS Phone: 270-436-6304

Compliance Period (MMYYYY): 072009

Collection Date (MMDDYYYY): 07222009
(All Samples Reported on this Form were Collected on this Date.)

Collector Name: William Duncan 7-22-09
Signature/Date

General Information -- This Section To Be Completed By Lab

Lab ID: 66031

Lab Receipt Date (MMDDYYYY): 07222009

Analysis Date (MMDDYYYY): 07222009

Total Coliform Analysis Method Code: 328

E Coli Analysis Method Code:

Lab Analyst: Mindy Martinez 7/23/09
Signature/Date

Lab Supervisor: 7-23-09
Signature/Date

Sample Information -- This Section To Be Completed By Collector

Sample Type (RT, RP, or SP) (See Key)	Special Sample Reason (A, B, C, D, or E) (See Key)	Replacement Sample? (Y or Blank)	Location Code (See Instructions)	Repeat Location Code (DN, UP, or OR) (See Key)	Sample Time (24 hr)	Free Chlorine (Required for all disinfectants except Chloramine)	Total Chlorine (Required when disinfectant is Chloramine)
RT			004		0730	1.31	1.37

Analysis Information -- This Section To Be Completed By Lab

Lab Sample Number	Analysis Time (24 hr)	Result (Total Coliform Count - or - TNTC - or - CNFG) (See Key)	Total Coliform (P/A)	E Coli (P/A)	Lab Sample Number of Original Sample (Required for Repeat and/or Replacement Samples) (See Instructions)
AG8H837	1600		A		

The signatories of this form certify by their signatures that collection and analysis of the water sample analyzed and the resulting data hereby submitted, were completed in accordance with the provisions of 401 KAR Chapter 8, specifically including but not limited to 401 KAR 8:200, Section 1 and 401 KAR 8:040; and that the data submitted on this form is a true and accurate report of the results of collection and analysis performed pursuant to the above-referenced regulations. Violations of 401 KAR Chapter 8 are subject to severe penalties prescribed in KRS Z24.99-010, up to $25,000 fine per day per violation and in some cases a violation may subject the violator to prison.

BACTERIOLOGICAL ANALYSIS REPORT FROM KEY

Sample Type:	RT = Routine (For Compliance)	RP = Repeat (For Compliance)	SP = Special (Not for Compliance)
Special Sample Reason: (Only If Sample Type = SP)	A = Suspected Contamination B = New Plant, Modification, or Line Extension	C = Treatment Modification D = Study/Investigation	E = Line Break, Emergency Repair
Repeat Location Code: (Only If Sample Type = RP)	DN = Downstream	UP = Upstream	OR = Original Site

McCoy & McCoy Laboratories, Inc.
www.mccoylabs.com

PO Box 907 * 825 Industrial Rd.
Madisonville, KY 42431
270.821.7375
270.825.9200 fax

2456 Fortune Dr., Suite 160
Lexington, KY 40509
859.299.7775
859.299.7785 fax

173 Island Creek Rd.
Pikeville, KY 41501
606.432.3104
606.432.3171 fax

1800 Kentucky Ave.
Paducah, KY 42003
270.444.6547
270.444.6572 fax

5510 Fern Valley Rd.
Suite 104 Promenade Pavilion
Louisville, KY 40228
502.961.0001

SHADED AREA FOR LAB USE ONLY

CHAIN OF CUSTODY and ANALYTICAL REQUEST

Please print legibly.

Client:	Bill To:	Send Results to:	Compliance Monitoring (check one)? Yes ☐ No ☐ / Samples Chlorinated (check one)? Yes ☐ No ☐	PO#
C.R.W.D #1				
Phone/Email:	Phone/Email	Phone/Email:	PWS ID# 310 / STATE	
Batch#	Project Name	Collected by (Signature): Bill	MMLI Quote # (if applicable)	

Sample ID#	COLLECTION DATE	COLLECTION TIME (24 hr)	SAMPLE DESCRIPTION Composite samples indicate begin time, end time and temp (°C) at end time	SAMPLE ANALYSIS REQUESTED Method ID if known (i.e. 8260B, 6010B/7470A...)	SAMPLE REMARKS (i.e. composite, grab, field readings, corrosive...)	Field Data pH S.U.	Field Data Temp °C	# OF CONTAINERS	MATRIX CODE (See Lower Left)	PRESERVATIVE CODE (See Lower Left)
	7-22-09	0730	004	RT						

1. Expedited services not available for all services, please call. 2. Samples received unannounced with less than 48 hours holding time remaining may be subject to additional surcharges. 3. Lab reserves the right to return unused portions of samples to client.

Relinquished by: (Signature)	Received By: (Signature)	DATE	TIME (24 hr)
William Duncan	[signature]	7-22-09	0900
Relinquished by: (Signature)	Received by: (Signature)	DATE	TIME (24 hr)
Relinquished by: (Signature)	Received for MMLI by:	DATE	TIME (24 hr)

MATRIX CODES:
DW – Drinking Water
SW – Solid Waste
SO – Soil/Solid
SL – Sludge
GW – Ground Water
WW – Waste Water
OL – Oil
SU – Surface Water

PRESERVATIVE CODES:
NI – Nitric acid (HNO_3)
HA – Hydrochloric Acid (HCl)
SH – Sodium Hydroxide (NaOH)
ST – Sodium Thiosulfate
ZN – Zinc acetate
SA – Sulfuric Acid (H_2SO_4)
4C – 4°C
AA – Ascorbic Acid
NO – No preservative
SS – Sodium sulfite

CONDITIONS UPON RECEIPT (CHECK ONE)
☐ Iced wet/Blue ____ °C Temp
☐ Ambient ____ °C Temp ☐ N/A

	YES	NO	N/A
Custody seals present/intact?	☐	☐	☐
Broken containers?	☐	☐	☐
COC agree with sample Labels?	☐	☐	☐
Correct containers for testing?	☐	☐	☐
Headspace issues acceptable?	☐	☐	☐
Holding time(s) acceptable?	☐	☐	☐
Preservative pH's acceptable?	☐	☐	☐
Was pH left unadjusted?	☐	☐	☐
All samples listed on COC received?	☐	☐	☐
Samples properly preserved?	☐	☐	☐
Client's sample documents received?	☐	☐	☐
COC been relinquished?	☐	☐	☐
Are tests listed for each sample?	☐	☐	☐

Method of Shipment (check one): US Postal ☐ UPS ☐ FedEx ☐ MMLI ☐ Client ☐
Date Shipped:
Airbill#
Logged in by: Location:
LAB NOTES
Follow up action required: YES ☐ NO ☐
Client informed on:
Client Rep:
By:
Reviewed by:
Date:

SAMPLE CATEGORY = TC

KENTUCKY DIVISION OF WATER / DRINKING WATER BRANCH
BACTERIOLOGICAL ANALYSIS REPORT FORM

General Information – This Section To Be Completed By Collector

PWS ID: KY0180509

Compliance Period (MMYYYY): 072009

PWS Name: CRWD #2

PWS Contact: Bill

Collection Date (MMDDYYYY): 07222009
(All Samples Reported on this Form were Collected on this Date.)

PWS Address: 69 Marguerite New Concord Ky 42076

PWS Phone: 270-436-6304

Collector Name: William Duncan 7-22-09
Signature/Date

General Information – This Section To Be Completed By Lab

Lab ID: 00031

Lab Receipt Date (MMDDYYYY): 07222009

Analysis Date (MMDDYYYY): 07222009

Total Coliform Analysis Method Code: 338

E Coli Analysis Method Code:

Lab Analyst: Mindy Martin 7/22/09
Signature/Date

Lab Supervisor: DAB 7-23-09
Signature/Date

Sample Information – This Section To Be Completed By Collector / Analysis Information – This Section To Be Completed By Lab

Sample Type (RT, RP, or SP) (See Key)	Special Sample Reason (A, B, C, D, or E) (See Key)	Replacement Sample? (Y or Blank)	Location Code (See Instructions)	Repeat Location Code (DN, UP, or OR) (See Key)	Sample Time (24 hr)	Free Chlorine (Required for all disinfectants except Chloramine)	Total Chlorine (Required when disinfectant is Chloramine)	Lab Sample Number	Analysis Time (24 hr)	Result (Total Coliform Count - or - TNTC - or - CNFG) (See Key)	Total Coliform (P/A)	E Coli (P/A)	Lab Sample Number of Original Sample (Required for Repeat and/or Replacement Samples) (See Instructions)
RT			004		0630	1.16	1.21	AG88838	1600		A		

The signatories of this form certify by their signatures that collection and analysis of the water sample analyzed and the resulting data hereby submitted, were completed in accordance with the provisions of 401 KAR Chapter 8, specifically including but not limited to 401 KAR 8:200, Section 1 and 401 KAR 8:040; and that the data submitted on this form is a true and accurate report of the results of collection and analysis performed pursuant to the above-referenced regulations. Violations of 401 KAR Chapter 8 are subject to severe penalties prescribed in KRS 224.99-010, up to $25,000 fine per day per violation and in some cases a violation may subject the violator to prison.

BACTERIOLOGICAL ANALYSIS REPORT FROM KEY

Sample Type:	RT = Routine (For Compliance)	RP = Repeat (For Compliance)	SP = Special (Not for Compliance)
Special Sample Reason: (Only If Sample Type = SP)	A = Suspected Contamination B = New Plant, Modification, or Line Extension	C = Treatment Modification D = Study/Investigation	E = Line Break, Emergency Repair
Repeat Location Code: (Only If Sample Type = RP)	DN = Downstream	UP = Upstream	OR = Original Site

McCoy & McCoy Laboratories, Inc.
www.mccoylabs.com

PO Box 907 * 825 Industrial Rd.
Madisonville, KY 42431
270.821.7375
270.825.9200 fax

2456 Fortune Dr., Suite 160
Lexington, KY 40509
859.299.7775
859.299.7785 fax

173 Island Creek Rd.
Pikeville, KY 41501
606.432.3104
606.432.3171 fax

1800 Kentucky Ave.
Paducah, KY 42003
270.444.6547
270.444.6572 fax

5510 Fern Valley Rd.
Suite 104 Promenade Pavilion
Louisville, KY 40228
502.961.0001

SHADED AREA FOR LAB USE ONLY

CHAIN OF CUSTODY and ANALYTICAL REQUEST

Please print legibly

Client:	Bill To:	Send Results to:	Compliance Monitoring (check one)? Yes ☐ No ☐ Samples Chlorinated (check one)? Yes ☐ No ☐	PO#
CIRWID #2				
Phone/Email:	Phone/Email	Phone/Email:	PWS ID# / STATE	
Batch#	Project Name	Collected by (Signature): Pso	MMLI Quote # (if applicable)	

Sample ID#	COLLECTION DATE	TIME (24 hr)	SAMPLE DESCRIPTION Composite samples indicate begin time, end time and temp (°C) at end time	SAMPLE ANALYSIS REQUESTED Method ID if known (i.e. 8260B, 6010B/7470A...)	SAMPLE REMARKS (i.e. composite, grab, field readings, corrosive...)	Field Data pH S.U.	Field Data Temp °C	# OF CONTAINERS	MATRIX CODE (See Lower Left)	PRESERVATIVE CODE (See Lower Left)
	7-22-09	0630	004	RT						

1. Expedited services not available for all services, please call. 2. Samples received unannounced with less than 48 hours holding time remaining may be subject to additional surcharges. 3. Lab reserves the right to return unused portions of samples to client.

Relinquished by: (Signature)	Received By: (Signature)	DATE	TIME (24 hr)
William Duncan	[signature]	7-22-09	0900
Relinquished by: (Signature)	Received by: (Signature)	DATE	TIME (24 hr)
Relinquished by: (Signature)	Received for MMLI by:	DATE	TIME (24 hr)

CONDITIONS UPON RECEIPT (CHECK ONE)
☐ Iced wet/Blue ____ °C Temp
☐ Ambient ____ °C Temp ☐ N/A

	YES	NO	N/A
Custody seals present/intact?	☐	☐	☐
Broken containers?	☐	☐	☐
COC agree with sample Labels?	☐	☐	☐
Correct containers for testing?	☐	☐	☐
Headspace issues acceptable?	☐	☐	☐
Holding time(s) acceptable?	☐	☐	☐
Preservative pH's acceptable?	☐	☐	☐
Was pH left unadjusted?	☐	☐	☐
All samples listed on COC received?	☐	☐	☐
Samples properly preserved?	☐	☐	☐
Client's sample documents received?	☐	☐	☐
COC been relinquished?	☐	☐	☐
Are tests listed for each sample?	☐	☐	☐

Method of Shipment (check one): UPS ☐ FedEx ☐ MMLI ☐ US Postal ☐ Client ☐
Date Shipped:
Airbill #:
Logged in by: Location:
LAB NOTES:
Follow up action required: YES ☐ NO ☐
Client informed on:
Client Rep:
By:
Reviewed by:
Date:

MATRIX CODES:
DW – Drinking Water
SW – Solid Waste
SO – Soil/Solid
SL – Sludge
GW – Ground Water
WW – Waste Water
OL – Oil
SU – Surface Water

PRESERVATIVE CODES:
NI – Nitric acid (HNO_3)
HA – Hydrochloric Acid (HCl)
SH – Sodium Hydroxide (NaOH)
ST – Sodium Thiosulfate
ZN – Zinc acetate
SA – Sulfuric Acid (H_2SO_4)
4C – 4°C
AA – Ascorbic Acid
NO – No preservative
SS – Sodium sulfite

SAMPLE CATEGORY = TC

KENTUCKY DIVISION OF WATER / DRINKING WATER BRANCH
BACTERIOLOGICAL ANALYSIS REPORT FORM

General Information -- This Section To Be Completed By Collector

PWS ID: KY0180502

PWS Name: CRWD # 3

PWS Contact: Bill

PWS Address: 69 Marguerite New Concord Ky 42076

PWS Phone: 270-436-6304

Compliance Period (MMYYYY): 072009

Collection Date (MMDDYYYY): 07282009
(All Samples Reported on this Form were Collected on this Date.)

Collector Name: William Duncan 7-28-09
Signature/Date

General Information -- This Section To Be Completed By Lab

Lab ID: D6081

Lab Receipt Date (MMDDYYYY): 07222009

Analysis Date (MMDDYYYY): 07222009

Lab Analyst: Mindy Martin 7/23/09
Signature/Date

Total Coliform Analysis Method Code: 328

E Coli Analysis Method Code:

Lab Supervisor: DAB 7-23-09
Signature/Date

Sample Information -- This Section To Be Completed By Collector

Sample Type (RT, RP, or SP) (See Key)	Special Sample Reason (A, B, C, D, or E) (See Key)	Replacement Sample? (Y or Blank)	Location Code (See Instructions)	Repeat Location Code (DN, UP, or OR) (See Key)	Sample Time (24 hr)	Free Chlorine (Required for all disinfectants except Chloramine)	Total Chlorine (Required when disinfectant is Chloramine)
RT			004		0600	1.24	1.29

Analysis Information -- This Section To Be Completed By Lab

Lab Sample Number	Analysis Time (24 hr)	Result (Total Coliform Count - or - TNTC - or - CNFG) (See Key)	Total Coliform (P/A)	E Coli (P/A)	Lab Sample Number of Original Sample (Required for Repeat and/or Replacement Samples) (See Instructions)
A68484	1600		A		

The signatories of this form certify by their signatures that collection and analysis of the water sample analyzed and the resulting data hereby submitted, were completed in accordance with the provisions of 401 KAR Chapter 8, specifically including but not limited to 401 KAR 8:200, Section 1 and 401 KAR 8:040; and that the data submitted on this form is a true and accurate report of the results of collection and analysis performed pursuant to the above-referenced regulations. Violations of 401 KAR Chapter 8 are subject to severe penalties prescribed in KRS 224.99-010, up to $25,000 fine per day per violation and in some cases a violation may subject the violator to prison.

BACTERIOLOGICAL ANALYSIS REPORT FROM KEY

Sample Type:	RT = Routine (For Compliance)	RP = Repeat (For Compliance)	SP = Special (Not for Compliance)
Special Sample Reason: (Only If Sample Type = SP)	A = Suspected Contamination B = New Plant, Modification, or Line Extension	C = Treatment Modification D = Study/Investigation	E = Line Break, Emergency Repair
Repeat Location Code: (Only If Sample Type = RP)	DN = Downstream	UP = Upstream	OR = Original Site

McCoy & McCoy Laboratories, Inc.
www.mccoylabs.com

PO Box 907 * 825 Industrial Rd.
Madisonville, KY 42431
270.821.7375
270.825.9200 fax

2456 Fortune Dr., Suite 160
Lexington, KY 40509
859.299.7775
859.299.7785 fax

173 Island Creek Rd.
Pikeville, KY 41501
606.432.3104
606.432.3171 fax

1800 Kentucky Ave.
Paducah, KY 42003
270.444.6547
270.444.6572 fax

5510 Fern Valley Rd.
Suite 104 Promenade Pavilion
Louisville, KY 40228
502.961.0001

SHADED AREA FOR LAB USE ONLY

CHAIN OF CUSTODY and ANALYTICAL REQUEST

Please print legibly

Client: C.R.W.D #3	Bill To:	Send Results to:	Compliance Monitoring (check one)? Yes ☐ No ☐ Samples Chlorinated (check one)? Yes ☐ No ☐	PO#
Phone/Email:	Phone/Email	Phone/Email:	PWS ID# / STATE	
Batch#	Project Name	Collected by (Signature): Rill	MMLI Quote # (if applicable)	

Sample ID#	COLLECTION DATE	TIME (24 hr)	SAMPLE DESCRIPTION Composite samples indicate begin time, end time and temp (°C) at end time	SAMPLE ANALYSIS REQUESTED Method ID if known (i.e. 8260B, 6010B/7470A...)	SAMPLE REMARKS (i.e. composite, grab, field readings, corrosive...)	Field Data pH S.U.	Field Data Temp °C	# OF CONTAINERS	MATRIX CODE (See Lower Left)	PRESERVATIVE CODE (See Lower Left)
	7-22-09	0600	004	RT						

1. Expedited services not available for all services, please call. 2. Samples received unannounced with less than 48 hours holding time remaining may be subject to additional surcharges. 3. Lab reserves the right to return unused portions of samples to client.

Relinquished by: (Signature)	Received By: (Signature)	DATE	TIME (24 hr)
William Duncan	[signature]	7-22-09	0900
Relinquished by: (Signature)	Received by: (Signature)	DATE	TIME (24 hr)
Relinquished by: (Signature)	Received for MMLI by:	DATE	TIME (24 hr)

CONDITIONS UPON RECEIPT (CHECK ONE)
☐ Iced wet/Blue °C Temp
☐ Ambient °C Temp ☐ N/A

	YES	NO	N/A
Custody seals present/intact?	☐	☐	☐
Broken containers?	☐	☐	☐
COC agree with sample Labels?	☐	☐	☐
Correct containers for testing?	☐	☐	☐
Headspace issues acceptable?	☐	☐	☐
Holding time(s) acceptable?	☐	☐	☐
Preservative pH's acceptable?	☐	☐	☐
Was pH left unadjusted?	☐	☐	☐
All samples listed on COC received?	☐	☐	☐
Samples properly preserved?	☐	☐	☐
Client's sample documents received?	☐	☐	☐
COC been relinquished?	☐	☐	☐
Are tests listed for each sample?	☐	☐	☐

Method of Shipment (check one): US Postal ☐ UPS ☐ FedEx ☐ MMLI ☐ Client ☐
Date Shipped:
Airbill#:
Logged in by: Location:
LAB NOTES:
Follow up action required: YES ☐ NO ☐
Client informed on:
Client Rep.:
By:
Reviewed by:
Date:

MATRIX CODES:
DW – Drinking Water
GW – Ground Water
SW – Solid Waste
WW – Waste Water
SO – Soil/Solid
OL – Oil
SL – Sludge
SU – Surface Water

PRESERVATIVE CODES:
NI – Nitric acid (HNO_3)
SA – Sulfuric Acid (H_2SO_4)
HA – Hydrochloric Acid (HCl)
4C – 4°C
SH – Sodium Hydroxide (NaOH)
AA – Ascorbic Acid
ST – Sodium Thiosulfate
NO – No preservative
ZN – Zinc acetate
SS – Sodium sulfite

SAMPLE CATEGORY = TC

KENTUCKY DIVISION OF WATER / DRINKING WATER BRANCH
BACTERIOLOGICAL ANALYSIS REPORT FORM

General Information – This Section To Be Completed By Collector

PWS ID: KY0118316

PWS Name: CRWD # 4

PWS Contact: Bill

PWS Address: 69 Marguerite, New Concord Ky 42076

PWS Phone: 270-436-6304

Compliance Period (MMYYYY): 072009

Collection Date (MMDDYYYY): 07232009 (All Samples Reported on this Form were Collected on this Date.)

Collector Name: William Duncan 7-23-09 (Signature/Date)

General Information – This Section To Be Completed By Lab

Lab ID: 60031

Lab Receipt Date (MMDDYYYY): 07232009

Analysis Date (MMDDYYYY): 07232009

Total Coliform Analysis Method Code: 328

E Coli Analysis Method Code:

Lab Analyst: Mindy Martin 7/23/09 (Signature/Date)

Lab Supervisor: DAS 7-23-09 (Signature/Date)

Sample Information – This Section To Be Completed By Collector / Analysis Information – This Section To Be Completed By Lab

Sample Type (RT, RP, or SP) (See Key)	Special Sample Reason (A, B, C, D, or E) (See Key)	Replacement Sample? (Y or Blank)	Location Code (See Instructions)	Repeat Location Code (DN, UP, or OR) (See Key)	Sample Time (24 hr)	Free Chlorine (Required for all disinfectants except Chloramine)	Total Chlorine (Required when disinfectant is Chloramine)	Lab Sample Number	Analysis Time (24 hr)	Result (Total Coliform Count - or - TNTC - or - CNFG) (See Key)	Total Coliform (P/A)	E Coli (P/A)	Lab Sample Number of Original Sample (Required for Repeat and/or Replacement Samples) (See Instructions)
RT			014		0805	1.13	1.18	AS89892	1600		A		

The signatories of this form certify by their signatures that collection and analysis of the water sample analyzed and the resulting data hereby submitted, were completed in accordance with the provisions of 401 KAR Chapter 8, specifically including but not limited to 401 KAR 8:200, Section 1 and 401 KAR 8:040; and that the data submitted on this form is a true and accurate report of the results of collection and analysis performed pursuant to the above-referenced regulations. Violations of 401 KAR Chapter 8 are subject to severe penalties prescribed in KRS 224.99-010, up to $25,000 fine per day per violation and in some cases a violation may subject the violator to prison.

BACTERIOLOGICAL ANALYSIS REPORT FROM KEY

Sample Type:	RT = Routine (For Compliance)	RP = Repeat (For Compliance)	SP = Special (Not for Compliance)
Special Sample Reason: (Only if Sample Type = SP)	A = Suspected Contamination B = New Plant, Modification, or Line Extension	C = Treatment Modification D = Study/Investigation	E = Line Break, Emergency Repair
Repeat Location Code:	DN = Downstream	UP = Upstream	OR = Original Site

McCoy & McCoy Laboratories, Inc.
www.mccoylabs.com

PO Box 907 * 825 Industrial Rd.
Madisonville, KY 42431
270.821.7375
270.825.9200 fax

2456 Fortune Dr., Suite 160
Lexington, KY 40509
859.299.7775
859.299.7785 fax

173 Island Creek Rd.
Pikeville, KY 41501
606.432.3104
606.432.3171 fax

1800 Kentucky Ave.
Paducah, KY 42003
270.444.6547
270.444.6572 fax

5510 Fern Valley Rd.
Suite 104 Promenade Pavilion
Louisville, KY 40228
502.961.0001

SHADED AREA FOR LAB USE ONLY

CHAIN OF CUSTODY and ANALYTICAL REQUEST

Please print legibly

Client:	Bill To:	Send Results to:	Compliance Monitoring (check one)? Yes ☐ No ☐ Samples Chlorinated (check one)? Yes ☐ No ☐	PO#
C.R.W.D #4				
Phone/Email:	Phone/Email	Phone/Email:	PWS ID# / STATE	
Batch#	Project Name	Collected by (Signature): R.W.	MMLI Quote # (if applicable)	

Sample ID#	COLLECTION DATE	TIME (24 hr)	SAMPLE DESCRIPTION Composite samples indicate begin time, end time and temp (°C) at end time	SAMPLE ANALYSIS REQUESTED Method ID if known (i.e. 8260B, 6010B/7470A...)	SAMPLE REMARKS (i.e. composite, grab, field readings, corrosive...)	Field Data pH S.U.	Field Data Temp °C	# OF CONTAINERS	MATRIX CODE (See Lower Left)	PRESERVATIVE CODE (See Lower Left)
	7-22-09	0800	0/4	RT						

1. Expedited services not available for all services, please call. 2. Samples received unannounced with less than 48 hours holding time remaining may be subject to additional surcharges. 3. Lab reserves the right to return unused portions of samples to client.

Relinquished by: (Signature)	Received By: (Signature)	DATE	TIME (24 hr)
William Duncan	[signature]	7-22-09	0800
Relinquished by: (Signature)	Received by: (Signature)	DATE	TIME (24 hr)
Relinquished by: (Signature)	Received for MMLI by:	DATE	TIME (24 hr)

CONDITIONS UPON RECEIPT (CHECK ONE)
☐ Iced wet/Blue ____ °C Temp
☐ Ambient ____ °C Temp ☐ N/A

	YES	NO	N/A
Custody seals present/intact?	☐	☐	☐
Broken containers?	☐	☐	☐
COC agree with sample Labels?	☐	☐	☐
Correct containers for testing?	☐	☐	☐
Headspace issues acceptable?	☐	☐	☐
Holding time(s) acceptable?	☐	☐	☐
Preservative pH's acceptable?	☐	☐	☐
Was pH left unadjusted?	☐	☐	☐
All samples listed on COC received?	☐	☐	☐
Samples properly preserved?	☐	☐	☐
Client's sample documents received?	☐	☐	☐
COC been relinquished?	☐	☐	☐
Are tests listed for each sample?	☐	☐	☐

Method of Shipment (check one): US Postal ☐ UPS ☐ FedEx ☐ MMLI ☐ Client ☐
Date Shipped:
Airbill#:
Logged in by: Location:
LAB NOTES
Follow up action required: YES ☐ NO ☐
Client informed on:
Client Rep:
By:
Reviewed by:
Date:

MATRIX CODES:
DW – Drinking Water
SW – Solid Waste
SO – Soil/Solid
SL – Sludge
GW – Ground Water
WW – Waste Water
OL – Oil
SU – Surface Water

PRESERVATIVE CODES:
NI – Nitric acid (HNO_3)
HA – Hydrochloric Acid (HCl)
SH – Sodium Hydroxide (NaOH)
ST – Sodium Thiosulfate
ZN – Zinc acetate
SA – Sulfuric Acid (H_2SO_4)
4C – 4°C
AA – Ascorbic Acid
NO – No preservative
SS – Sodium sulfite

SAMPLE CATEGORY = TC

KENTUCKY DIVISION OF WATER / DRINKING WATER BRANCH
BACTERIOLOGICAL ANALYSIS REPORT FORM

General Information – This Section To Be Completed By Collector

PWS ID: KY0180949

Compliance Period (MMYYYY): 072009

PWS Name: CRWD # 1

PWS Contact: Bill

Collection Date (MMDDYYYY): 07 29 2009
(All Samples Reported on this Form were Collected on this Date.)

PWS Address: 69 Marguerite New Concord Ky 42076

PWS Phone: 270-436-6304

Collector Name: William Duncan 7-29-09
Signature/Date

General Information – This Section To Be Completed By Lab

Lab ID: 00001

Lab Receipt Date (MMDDYYYY): 07 29 2009

Total Coliform Analysis Method Code: 9B8

Analysis Date (MMDDYYYY): 07 29 2009

E Coli Analysis Method Code:

Lab Analyst: Mindy Martin 7/30/09
Signature/Date

Lab Supervisor: [signature] 7/30/09
Signature/Date

Sample Information – This Section To Be Completed By Collector

Sample Type (RT, RP, or SP) (See Key)	Special Sample Reason (A, B, C, D, or E) (See Key)	Replacement Sample? (Y or Blank)	Location Code (See Instructions)	Repeat Location Code (DN, UP, or OR) (See Key)	Sample Time (24 hr)	Free Chlorine (Required for all disinfectants except Chloramine)	Total Chlorine (Required when disinfectant is Chloramine)
RT			005		0730	1.43	1.49
						.	.
						.	.
						.	.
						.	.
						.	.
						.	.
						.	.
						.	.
						.	.
						.	.

Analysis Information – This Section To Be Completed By Lab

Lab Sample Number	Analysis Time (24 hr)	Result (Total Coliform Count - or - TNTC - or - CNFG) (See Key)	Total Coliform (P/A)	E Coli (P/A)	Lab Sample Number of Original Sample (Required for Repeat and/or Replacement Samples) (See Instructions)
AG 80391	1500		A		

The signatories of this form certify by their signatures that collection and analysis of the water sample analyzed and the resulting data hereby submitted, were completed in accordance with the provisions of 401 KAR Chapter 8, specifically including but not limited to 401 KAR 8:200, Section 1 and 401 KAR 8:040; and that the data submitted on this form is a true and accurate report of the results of collection and analysis performed pursuant to the above-referenced regulations. Violations of 401 KAR Chapter 8 are subject to severe penalties prescribed in KRS 224.99-010, up to $25,000 fine per day per violation and in some cases a violation may subject the violator to prison.

BACTERIOLOGICAL ANALYSIS REPORT FROM KEY

Sample Type:	RT = Routine (For Compliance)	RP = Repeat (For Compliance)	SP = Special (Not for Compliance)
Special Sample Reason: (Only If Sample Type = SP)	A = Suspected Contamination B = New Plant, Modification, or Line Extension	C = Treatment Modification D = Study/Investigation	E = Line Break, Emergency Repair
Repeat Location Code: (Only If Sample Type = RP)	DN = Downstream	UP = Upstream	OR = Original Site

McCoy & McCoy Laboratories, Inc.
www.mccoylabs.com

PO Box 907 * 825 Industrial Rd.
Madisonville, KY 42431
270.821.7375
270.825.9200 fax

2456 Fortune Dr., Suite 160
Lexington, KY 40509
859.299.7775
859.299.7785 fax

173 Island Creek Rd.
Pikeville, KY 41501
606.432.3104
606.432.3171 fax

1800 Kentucky Ave.
Paducah, KY 42003
270.444.6547
270.444.6572 fax

5510 Fern Valley Rd.
Suite 104 Promenade Pavilion
Louisville, KY 40228
502.961.0001

SHADED AREA FOR LAB USE ONLY

CHAIN OF CUSTODY and ANALYTICAL REQUEST

Please print legibly.

Client: CRIA PH 1

Phone/Email:

Batch#

Bill To:

Phone/Email

Project Name

Send Results to:

Phone/Email:

Collected by (Signature): Bill

Compliance Monitoring (check one)? Yes ☐ No ☐

Samples Chlorinated (check one)? Yes ☐ No ☐

PO#

PWS ID#

STATE

MMLI Quote # (if applicable)

Sample ID#	COLLECTION DATE	COLLECTION TIME (24 hr)	SAMPLE DESCRIPTION Composite samples indicate begin time, end time and temp (°C) at end time	SAMPLE ANALYSIS REQUESTED Method ID if known (i.e. 8260B, 6010B/7470A...)	SAMPLE REMARKS (i.e. composite, grab, field readings, corrosive...)	Field Data pH S.U.	Field Data Temp °C	# OF CONTAINERS	MATRIX CODE (See Lower Left)	PRESERVATIVE CODE (See Lower Left)
	7-29-09	0730	005	RT						

1. Expedited services not available for all services, please call. 2. Samples received unannounced with less than 48 hours holding time remaining may be subject to additional surcharges. 3. Lab reserves the right to return unused portions of samples to client.

Relinquished by: (Signature)	Received By: (Signature)	DATE	TIME (24 hr)
William Duncan	Dale P[illegible]	7-29-09	0900
Relinquished by: (Signature)	Received by: (Signature)	DATE	TIME (24 hr)
Relinquished by: (Signature)	Received for MMLI by:	DATE	TIME (24 hr)

MATRIX CODES:
DW – Drinking Water
SW – Solid Waste
SO – Soil/Solid
SL – Sludge
GW – Ground Water
WW – Waste Water
OL – Oil
SU – Surface Water

PRESERVATIVE CODES:
NI – Nitric acid (HNO_3)
HA – Hydrochloric Acid (HCl)
SH – Sodium Hydroxide (NaOH)
ST – Sodium Thiosulfate
ZN – Zinc acetate
SA – Sulfuric Acid (H_2SO_4)
4C – 4°C
AA – Ascorbic Acid
NO – No preservative
SS – Sodium sulfite

CONDITIONS UPON RECEIPT (CHECK ONE)
☐ Iced wet/Blue ____ °C Temp
☐ Ambient ____ °C Temp ☐ N/A

	YES	NO	N/A
Custody seals present/intact?	☐	☐	☐
Broken containers?	☐	☐	☐
COC agree with sample Labels?	☐	☐	☐
Correct containers for testing?	☐	☐	☐
Headspace issues acceptable?	☐	☐	☐
Holding time(s) acceptable?	☐	☐	☐
Preservative pH's acceptable?	☐	☐	☐
Was pH left unadjusted?	☐	☐	☐
All samples listed on COC received?	☐	☐	☐
Samples properly preserved?	☐	☐	☐
Client's sample documents received?	☐	☐	☐
COC been relinquished?	☐	☐	☐
Are tests listed for each sample?	☐	☐	☐

Method of Shipment (check one): UPS ☐ FedEx ☐ MMLI ☐ US Postal ☐ Client ☐

Date Shipped:
Airbill#:
Logged in by: Location:
LAB NOTES:

Follow up action required: YES ☐ NO ☐
Client informed on: ____/____/____
Client Rep:
By:
Reviewed by:
Date: ____/____/____

SAMPLE CATEGORY = TC

KENTUCKY DIVISION OF WATER / DRINKING WATER BRANCH
BACTERIOLOGICAL ANALYSIS REPORT FORM

General Information – This Section To Be Completed By Collector

PWS ID: KY0180509

PWS Name: CRWD # 2

PWS Contact: Bill

PWS Address: 69 Marguerite New Concord Ky 42076

PWS Phone: 270-436-6304

Compliance Period (MMYYYY): 072009

Collection Date (MMDDYYYY): 07292009
(All Samples Reported on this Form were Collected on this Date.)

Collector Name: William Duncan
Signature/Date

General Information – This Section To Be Completed By Lab

Lab ID: 0001

Lab Receipt Date (MMDDYYYY): 07282009

Analysis Date (MMDDYYYY): 07292009

Total Coliform Analysis Method Code: 078

E Coli Analysis Method Code:

Lab Analyst: Mindy Martin 7/30/09
Signature/Date

Lab Supervisor: 7/30/09
Signature/Date

Sample Information – This Section To Be Completed By Collector / Analysis Information – This Section To Be Completed By Lab

Sample Type (RT, RP, or SP) (See Key)	Special Sample Reason (A, B, C, D, or E) (See Key)	Replacement Sample? (Y or Blank)	Location Code (See Instructions)	Repeat Location Code (DN, UP, or OR) (See Key)	Sample Time (24 hr)	Free Chlorine (Required for all disinfectants except Chloramine)	Total Chlorine (Required when disinfectant is Chloramine)	Lab Sample Number	Analysis Time (24 hr)	Result (Total Coliform Count - or - TNTC - or - CNFG) (See Key)	Total Coliform (P/A)	E Coli (P/A)	Lab Sample Number of Original Sample (Required for Repeat and/or Replacement Samples) (See Instructions)
RT			005		0630	1.31	1.37	A686394	1500		A		

The signatories of this form certify by their signatures that collection and analysis of the water sample analyzed and the resulting data hereby submitted, were completed in accordance with the provisions of 401 KAR Chapter 8, specifically including but not limited to 401 KAR 8:200, Section 1 and 401 KAR 8:040; and that the data submitted on this form is a true and accurate report of the results of collection and analysis performed pursuant to the above-referenced regulations. Violations of 401 KAR Chapter 8 are subject to severe penalties prescribed in KRS 224.99-010, up to $25,000 fine per day per violation and in some cases a violation may subject the violator to prison.

BACTERIOLOGICAL ANALYSIS REPORT FROM KEY

Sample Type:	RT = Routine (For Compliance)	RP = Repeat (For Compliance)	SP = Special (Not for Compliance)
Special Sample Reason: (Only If Sample Type = SP)	A = Suspected Contamination B = New Plant, Modification, or Line Extension	C = Treatment Modification D = Study/Investigation	E = Line Break, Emergency Repair
Repeat Location Code: (Only If Sample Type = RP)	DN = Downstream	UP = Upstream	OR = Original Site

McCoy & McCoy Laboratories, Inc.
www.mccoylabs.com

PO Box 907 * 825 Industrial Rd.
Madisonville, KY 42431
270.821.7375
270.825.9200 fax

2456 Fortune Dr., Suite 160
Lexington, KY 40509
859.299.7775
859.299.7785 fax

173 Island Creek Rd.
Pikeville, KY 41501
606.432.3104
606.432.3171 fax

1800 Kentucky Ave.
Paducah, KY 42003
270.444.6547
270.444.6572 fax

5510 Fern Valley Rd.
Suite 104 Promenade Pavilion
Louisville, KY 40228
502.961.0001

SHADED AREA FOR LAB USE ONLY

CHAIN OF CUSTODY and ANALYTICAL REQUEST

Please print legibly

Client:	Bill To:	Send Results to:	Compliance Monitoring (check one)? Yes ☐ No ☐ / Samples Chlorinated (check one)? Yes ☐ No ☐	PO#
CRWD #2				
Phone/Email:	Phone/Email	Phone/Email:	PWS ID# / STATE	
Batch#	Project Name	Collected by (Signature): Bill	MMLI Quote # (if applicable)	

Sample ID#	COLLECTION DATE	COLLECTION TIME (24 hr)	SAMPLE DESCRIPTION Composite samples indicate begin time, end time and temp (°C) at end time	SAMPLE ANALYSIS REQUESTED Method ID if known (i.e. 8260B, 6010B/7470A...)	SAMPLE REMARKS (i.e. composite, grab, field readings, corrosive...)	Field Data pH S.U.	Field Data Temp °C	# OF CONTAINERS	MATRIX CODE (See Lower Left)	PRESERVATIVE CODE (See Lower Left)
	7-29-09	0630	005	RT						

1. Expedited services not available for all services, please call. 2. Samples received unannounced with less than 48 hours holding time remaining may be subject to additional surcharges. 3. Lab reserves the right to return unused portions of samples to client.

Relinquished by: (Signature)	Received By: (Signature)	DATE	TIME (24 hr)
William Duncan	Dark [signature]	7-29-09	0900
Relinquished by: (Signature)	Received by: (Signature)	DATE	TIME (24 hr)
Relinquished by: (Signature)	Received for MMLI by:	DATE	TIME (24 hr)

MATRIX CODES:
DW – Drinking Water
SW – Solid Waste
SO – Soil/Solid
SL – Sludge
GW – Ground Water
WW – Waste Water
OL – Oil
SU – Surface Water

PRESERVATIVE CODES:
NI – Nitric acid (HNO_3)
HA – Hydrochloric Acid (HCl)
SH – Sodium Hydroxide (NaOH)
ST – Sodium Thiosulfate
ZN – Zinc acetate
SA – Sulfuric Acid (H_2SO_4)
4C – 4°C
AA – Ascorbic Acid
NO – No preservative
SS – Sodium sulfite

CONDITIONS UPON RECEIPT (CHECK ONE)
☐ Iced wet/Blue °C Temp
☐ Ambient °C Temp ☐ N/A

	YES	NO	N/A
Custody seals present/intact?	☐	☐	☐
Broken containers?	☐	☐	☐
COC agree with sample Labels?	☐	☐	☐
Correct containers for testing?	☐	☐	☐
Headspace issues acceptable?	☐	☐	☐
Holding time(s) acceptable?	☐	☐	☐
Preservative pH's acceptable?	☐	☐	☐
Was pH left unadjusted?	☐	☐	☐
All samples listed on COC received?	☐	☐	☐
Samples properly preserved?	☐	☐	☐
Client's sample documents received?	☐	☐	☐
COC been relinquished?	☐	☐	☐
Are tests listed for each sample?	☐	☐	☐

Method of Shipment (check one): US Postal ☐ UPS ☐ FedEx ☐ MMLI ☐ Client ☐
Date Shipped:
Airbill#:
Logged in by: Location:
LAB NOTES:
Follow up action required: YES ☐ NO ☐
Client informed on: / /
Client Rep:
By:
Reviewed by:
Date: / /

SAMPLE CATEGORY = TC

KENTUCKY DIVISION OF WATER / DRINKING WATER BRANCH
BACTERIOLOGICAL ANALYSIS REPORT FORM

General Information -- This Section To Be Completed By Collector

PWS ID: KY0180509

PWS Name: CRWD # 3

PWS Contact: Bill

PWS Address: 69 Marguerite New Concord Ky 42076

PWS Phone: 270-436-6304

Compliance Period (MMYYYY): 072009

Collection Date (MMDDYYYY): 07272009
(All Samples Reported on this Form were Collected on this Date.)

Collector Name: William Duncan 7-27-09
Signature/Date

General Information -- This Section To Be Completed By Lab

Lab ID: 00007

Lab Receipt Date (MMDDYYYY): 07282009

Analysis Date (MMDDYYYY): 07282009

Total Coliform Analysis Method Code: 029

E Coli Analysis Method Code:

Lab Analyst: Mindy Martin 7/29/09
Signature/Date

Lab Supervisor: [illegible] 7/29/09
Signature/Date

Sample Information -- This Section To Be Completed By Collector / Analysis Information -- This Section To Be Completed By Lab

Sample Type (RT, RP, or SP) (See Key)	Special Sample Reason (A, B, C, D, or E) (See Key)	Replacement Sample? (Y or Blank)	Location Code (See Instructions)	Repeat Location Code (DN, UP, or OR) (See Key)	Sample Time (24 hr)	Free Chlorine (Required for all disinfectants except Chloramine)	Total Chlorine (Required when disinfectant is Chloramine)	Lab Sample Number	Analysis Time (24 hr)	Result (Total Coliform Count - or - TNTC - or - CNFG) (See Key)	Total Coliform (P/A)	E Coli (P/A)	Lab Sample Number of Original Sample (Required for Repeat and/or Replacement Samples) (See Instructions)
RT			005		0900	1.11	1.17	A88240 7	1500		A		

The signatories of this form certify by their signatures that collection and analysis of the water sample analyzed and the resulting data hereby submitted, were completed in accordance with the provisions of 401 KAR Chapter 8, specifically including but not limited to 401 KAR 8:200, Section 1 and 401 KAR 8:040; and that the data submitted on this form is a true and accurate report of the results of collection and analysis performed pursuant to the above-referenced regulations. Violations of 401 KAR Chapter 8 are subject to severe penalties prescribed in KRS 224.99-010, up to $25,000 fine per day per violation and in some cases a violation may subject the violator to prison.

BACTERIOLOGICAL ANALYSIS REPORT FROM KEY

Sample Type:	RT = Routine (For Compliance)	RP = Repeat (For Compliance)	SP = Special (Not for Compliance)
Special Sample Reason: (Only If Sample Type = SP)	A = Suspected Contamination B = New Plant, Modification, or Line Extension	C = Treatment Modification D = Study/Investigation	E = Line Break, Emergency Repair
Repeat Location Code: (Only If Sample Type = RP)	DN = Downstream	UP = Upstream	OR = Original Site

McCoy & McCoy Laboratories, Inc.
www.mccoylabs.com

PO Box 907 * 825 Industrial Rd.
Madisonville, KY 42431
270.821.7375
270.825.9200 fax

2456 Fortune Dr., Suite 160
Lexington, KY 40509
859.299.7775
859.299.7785 fax

173 Island Creek Rd.
Pikeville, KY 41501
606.432.3104
606.432.3171 fax

1800 Kentucky Ave.
Paducah, KY 42003
270.444.6547
270.444.6572 fax

5510 Fern Valley Rd.
Suite 104 Promenade Pavilion
Louisville, KY 40228
502.961.0001

SHADED AREA FOR LAB USE ONLY

CHAIN OF CUSTODY and ANALYTICAL REQUEST

Please print legibly.

Client:	Bill To:	Send Results to:	Compliance Monitoring (check one)? Yes ☐ No ☐ Samples Chlorinated (check one)? Yes ☐ No ☐	PO#
CRWD # 3				
Phone/Email:	Phone/Email	Phone/Email:	PWS ID# / STATE	
Batch#	Project Name	Collected by (Signature): HJC	MMLI Quote # (if applicable)	

Sample ID#	COLLECTION DATE	TIME (24 hr)	SAMPLE DESCRIPTION Composite samples indicate begin time, end time and temp (°C) at end time	SAMPLE ANALYSIS REQUESTED Method ID if known (i.e. 8260B, 6010B/7470A...)	SAMPLE REMARKS (i.e. composite, grab, field readings, corrosive...)	Field Data pH S.U.	Field Data Temp °C	# OF CONTAINERS	MATRIX CODE (See Lower Left)	PRESERVATIVE CODE (See Lower Left)
	7-29-09	0600	005	RT						

1. Expedited services not available for all services, please call. 2. Samples received unannounced with less than 48 hours holding time remaining may be subject to additional surcharges. 3. Lab reserves the right to return unused portions of samples to client.

Relinquished by: (Signature)	Received By: (Signature)	DATE	TIME (24 hr)
William Duncan	[signature]	7-29-09	0900
Relinquished by: (Signature)	Received by: (Signature)	DATE	TIME (24 hr)
Relinquished by: (Signature)	Received for MMLI by:	DATE	TIME (24 hr)

CONDITIONS UPON RECEIPT (CHECK ONE)
☐ Iced wet/Blue °C Temp
☐ Ambient °C Temp ☐ N/A

	YES	NO	N/A
Custody seals present/intact?	☐	☐	☐
Broken containers?	☐	☐	☐
COC agree with sample Labels?	☐	☐	☐
Correct containers for testing?	☐	☐	☐
Headspace issues acceptable?	☐	☐	☐
Holding time(s) acceptable?	☐	☐	☐
Preservative pH's acceptable?	☐	☐	☐
Was pH left unadjusted?	☐	☐	☐
All samples listed on COC received?	☐	☐	☐
Samples properly preserved?	☐	☐	☐
Client's sample documents received?	☐	☐	☐
COC been relinquished?	☐	☐	☐
Are tests listed for each sample?	☐	☐	☐

Method of Shipment (check one): US Postal ☐ UPS ☐ FedEx ☐ MMLI ☐ Client ☐
Date Shipped:
Airbill#:
Logged in by: Location:
LAB NOTES:
Follow up action required: YES ☐ NO ☐
Client informed on:
Client Rep:
By:
Reviewed by:
Date:

MATRIX CODES:
DW – Drinking Water
SW – Solid Waste
SO – Soil/Solid
SL – Sludge
GW – Ground Water
WW – Waste Water
OL – Oil
SU – Surface Water

PRESERVATIVE CODES:
NI – Nitric acid (HNO_3)
HA – Hydrochloric Acid (HCl)
SH – Sodium Hydroxide (NaOH)
ST – Sodium Thiosulfate
ZN – Zinc acetate
SA – Sulfuric Acid (H_2SO_4)
4C – 4°C
AA – Ascorbic Acid
NO – No preservative
SS – Sodium sulfite

SAMPLE CATEGORY = TC

KENTUCKY DIVISION OF WATER / DRINKING WATER BRANCH
BACTERIOLOGICAL ANALYSIS REPORT FORM

General Information -- This Section To Be Completed By Collector

PWS ID: KY0183106

Compliance Period (MMYYYY): 072009

PWS Name: CRWD # 4

PWS Contact: Bill

Collection Date (MMDDYYYY): 07272009
(All Samples Reported on this Form were Collected on this Date.)

PWS Address: 69 Marguerite, New Concord Ky 42076

PWS Phone: 270-436-6304

Collector Name: William Duncan 7-29-09
Signature/Date

General Information -- This Section To Be Completed By Lab

Lab ID: 00002

Lab Receipt Date (MMDDYYYY): 07292009

Total Coliform Analysis Method Code: 078

Analysis Date (MMDDYYYY): 07292009

E Coli Analysis Method Code:

Lab Analyst: Mindy Martin 7/30/09
Signature/Date

Lab Supervisor: [signature] 7/30/09
Signature/Date

Sample Information -- This Section To Be Completed By Collector

Sample Type (RT, RP, or SP) (See Key)	Special Sample Reason (A, B, C, D, or E) (See Key)	Replacement Sample? (Y or Blank)	Location Code (See Instructions)	Repeat Location Code (DN, UP, or OR) (See Key)	Sample Time (24 hr)	Free Chlorine (Required for all disinfectants except Chloramine)	Total Chlorine (Required when disinfectant is Chloramine)
RT			090		0800	1.26	1.32

Analysis Information -- This Section To Be Completed By Lab

Lab Sample Number	Analysis Time (24 hr)	Result (Total Coliform Count - or - TNTC - or - CNFG) (See Key)	Total Coliform (P/A)	E Coli (P/A)	Lab Sample Number of Original Sample (Required for Repeat and/or Replacement Samples) (See Instructions)
A5864499	1500		A		

The signatories of this form certify by their signatures that collection and analysis of the water sample analyzed and the resulting data hereby submitted, were completed in accordance with the provisions of 401 KAR Chapter 8, specifically including but not limited to 401 KAR 8:200, Section 1 and 401 KAR 8:040; and that the data submitted on this form is a true and accurate report of the results of collection and analysis performed pursuant to the above-referenced regulations. Violations of 401 KAR Chapter 8 are subject to severe penalties prescribed in KRS 224.99-010, up to $25,000 fine per day per violation and in some cases a violation may subject the violator to prison.

BACTERIOLOGICAL ANALYSIS REPORT FROM KEY

Sample Type:	RT = Routine (For Compliance)	RP = Repeat (For Compliance)	SP = Special (Not for Compliance)
Special Sample Reason: (Only if Sample Type = SP)	A = Suspected Contamination B = New Plant, Modification, or Line Extension	C = Treatment Modification D = Study/Investigation	E = Line Break, Emergency Repair
Repeat Location Code:	DN = Downstream	UP = Upstream	OR = Original Site

McCoy & McCoy Laboratories, Inc.
www.mccoylabs.com

PO Box 907 * 825 Industrial Rd.
Madisonville, KY 42431
270.821.7375
270.825.9200 fax

2456 Fortune Dr., Suite 160
Lexington, KY 40509
859.299.7775
859.299.7785 fax

173 Island Creek Rd.
Pikeville, KY 41501
606.432.3104
606.432.3171 fax

1800 Kentucky Ave.
Paducah, KY 42003
270.444.6547
270.444.6572 fax

5510 Fern Valley Rd.
Suite 104 Promenade Pavilion
Louisville, KY 40228
502.961.0001

SHADED AREA FOR LAB USE ONLY

CHAIN OF CUSTODY and ANALYTICAL REQUEST

Please print legibly.

Client: CRWD #4	Bill To:	Send Results to:	Compliance Monitoring (check one)? Yes ☐ No ☐ Samples Chlorinated (check one)? Yes ☐ No ☐	PO#
Phone/Email:	Phone/Email	Phone/Email:	PWS ID# / STATE	
Batch#	Project Name	Collected by (Signature): Rik	MMLI Quote # (if applicable)	

Sample ID#	COLLECTION DATE	COLLECTION TIME (24 hr)	SAMPLE DESCRIPTION Composite samples indicate begin time, end time and temp (°C) at end time	SAMPLE ANALYSIS REQUESTED Method ID if known (i.e. 8260B, 6010B/7470A...)	SAMPLE REMARKS (i.e. composite, grab, field readings, corrosive...)	Field Data pH S.U.	Field Data Temp °C	# OF CONTAINERS	MATRIX CODE (See Lower Left)	PRESERVATIVE CODE (See Lower Left)
	7-29-09	0800	020	RT						

1. Expedited services not available for all services, please call. 2. Samples received unannounced with less than 48 hours holding time remaining may be subject to additional surcharges. 3. Lab reserves the right to return unused portions of samples to client.

Relinquished by: (Signature)	Received By: (Signature)	DATE	TIME (24 hr)
William Duncan	[signature]	7-29-09	0900
Relinquished by: (Signature)	Received by: (Signature)	DATE	TIME (24 hr)
Relinquished by: (Signature)	Received for MMLI by:	DATE	TIME (24 hr)

MATRIX CODES:
DW – Drinking Water
SW – Solid Waste
SO – Soil/Solid
SL – Sludge
GW – Ground Water
WW – Waste Water
OL – Oil
SU – Surface Water

PRESERVATIVE CODES:
NI – Nitric acid (HNO_3)
HA – Hydrochloric Acid (HCl)
SH – Sodium Hydroxide (NaOH)
ST – Sodium Thiosulfate
ZN – Zinc acetate
SA – Sulfuric Acid (H_2SO_4)
4C – 4°C
AA – Ascorbic Acid
NO – No preservative
SS – Sodium sulfite

CONDITIONS UPON RECEIPT (CHECK ONE)
☐ Iced wet/Blue ____ °C Temp
☐ Ambient ____ °C Temp ☐ N/A

	YES	NO	N/A
Custody seals present/intact?	☐	☐	☐
Broken containers?	☐	☐	☐
COC agree with sample Labels?	☐	☐	☐
Correct containers for testing?	☐	☐	☐
Headspace issues acceptable?	☐	☐	☐
Holding time(s) acceptable?	☐	☐	☐
Preservative pH's acceptable?	☐	☐	☐
Was pH left unadjusted?	☐	☐	☐
All samples listed on COC received?	☐	☐	☐
Samples properly preserved?	☐	☐	☐
Client's sample documents received?	☐	☐	☐
COC been relinquished?	☐	☐	☐
Are tests listed for each sample?	☐	☐	☐

Method of Shipment (check one): UPS ☐ FedEx ☐ MMLI ☐ US Postal ☐ Client ☐
Date Shipped:
Airbill#:
Logged in by: Location:
LAB NOTES:
Follow up action required: YES ☐ NO ☐
Client informed on: / /
Client Rep:
By:
Reviewed by:
Date: / /

SAMPLE CATEGORY = TC

KENTUCKY DIVISION OF WATER / DRINKING WATER BRANCH
BACTERIOLOGICAL ANALYSIS REPORT FORM

General Information – This Section To Be Completed By Collector

PWS ID: KY0180549

PWS Name: CRWD #1

PWS Contact: Bill

PWS Address: 69 Marguerite Ave Concord Ky 42076

PWS Phone: 270-436-6304

Compliance Period (MMYYYY): 08 2009

Collection Date (MMDDYYYY): 08 19 2009
(All Samples Reported on this Form were Collected on this Date.)

Collector Name: William Duncan 8-19-09
Signature/Date

General Information – This Section To Be Completed By Lab

Lab ID: 00001

Lab Receipt Date (MMDDYYYY): 08 19 2009

Analysis Date (MMDDYYYY): 08 19 2009

Total Coliform Analysis Method Code: 98

E Coli Analysis Method Code:

Lab Analyst: Mindy Martin 8-20-09
Signature/Date

Lab Supervisor: 8/20/09
Signature/Date

Sample Information – This Section To Be Completed By Collector

Sample Type (RT, RP, or SP) (See Key)	Special Sample Reason (A, B, C, D, or E) (See Key)	Replacement Sample? (Y or Blank)	Location Code (See Instructions)	Repeat Location Code (DN, UP, or OR) (See Key)	Sample Time (24 hr)	Free Chlorine (Required for all disinfectants except Chloramine)	Total Chlorine (Required when disinfectant is Chloramine)
RT			002		0938	1.93	1.99

Analysis Information – This Section To Be Completed By Lab

Lab Sample Number	Analysis Time (24 hr)	Result (Total Coliform Count - or - TNTC - or - CNFG) (See Key)	Total Coliform (P/A)	E Coli (P/A)	Lab Sample Number of Original Sample (Required for Repeat and/or Replacement Samples) (See Instructions)
AG91237	1940		A		

The signatories of this form certify by their signatures that collection and analysis of the water sample analyzed and the resulting data hereby submitted, were completed in accordance with the provisions of 401 KAR Chapter 8, specifically including but not limited to 401 KAR 8:200, Section 1 and 401 KAR 8:040; and that the data submitted on this form is a true and accurate report of the results of collection and analysis performed pursuant to the above-referenced regulations. Violations of 401 KAR Chapter 8 are subject to severe penalties prescribed in KRS 224.99-010, up to $25,000 fine per day per violation and in some cases a violation may subjected the violator to prison.

BACTERIOLOGICAL ANALYSIS REPORT FROM KEY

Sample Type:	RT = Routine (For Compliance)	RP = Repeat (For Compliance)	SP = Special (Not for Compliance)
Special Sample Reason: (Only if Sample Type = SP)	A = Suspected Contamination B = New Plant, Modification, or Line Extension	C = Treatment Modification D = Study/Investigation	E = Line Break, Emergency Repair
Repeat Location Code: (Only if Sample Type = RP)	DN = Downstream	UP = Upstream	OR = Original Site

McCoy & McCoy Laboratories, Inc.
www.mccoylabs.com

PO Box 907 * 825 Industrial Rd.
Madisonville, KY 42431
270.821.7375
270.825.9200 fax

2456 Fortune Dr., Suite 160
Lexington, KY 40509
859.299.7775
859.299.7785 fax

173 Island Creek Rd.
Pikeville, KY 41501
606.432.3104
606.432.3171 fax

1800 Kentucky Ave.
Paducah, KY 42003
270.444.6547
270.444.6572 fax

5510 Fern Valley Rd.
Suite 104 Promenade Pavilion
Louisville, KY 40228
502.961.0001

SHADED AREA FOR LAB USE ONLY

CHAIN OF CUSTODY and ANALYTICAL REQUEST

Please print legibly.

Client: CRWD # 1

Phone/Email:

Bill To:

Phone/Email

Send Results to:

Phone/Email:

Compliance Monitoring (check one)? Yes ☐ No ☐

Samples Chlorinated (check one)? Yes ☐ No ☐

PO#

PWS ID#

STATE

Batch#

Project Name

Collected by (Signature): Bill

MMLI Quote # (if applicable)

Sample ID#	COLLECTION DATE	COLLECTION TIME (24 hr)	SAMPLE DESCRIPTION Composite samples indicate begin time, end time and temp (°C) at end time	SAMPLE ANALYSIS REQUESTED Method ID if known (i.e. 8260B, 6010B/7470A...)	SAMPLE REMARKS (i.e. composite, grab, field readings, corrosive...)	Field Data pH S.U.	Field Data Temp °C	# OF CONTAINERS	MATRIX CODE (See Lower Left)	PRESERVATIVE CODE (See Lower Left)
	8-19-09	0730	001	RT						

1. Expedited services not available for all services, please call. 2. Samples received unannounced with less than 48 hours holding time remaining may be subject to additional surcharges. 3. Lab reserves the right to return unused portions of samples to client.

Relinquished by: (Signature)	Received By: (Signature)	DATE	TIME (24 hr)
William Duncan	Dack [signature]	8-19-09	0900
Relinquished by: (Signature)	Received by: (Signature)	DATE	TIME (24 hr)
Relinquished by: (Signature)	Received for MMLI by:	DATE	TIME (24 hr)

MATRIX CODES:
DW – Drinking Water
SW – Solid Waste
SO – Soil/Solid
SL – Sludge
GW – Ground Water
WW – Waste Water
OL – Oil
SU – Surface Water

PRESERVATIVE CODES:
NI – Nitric acid (HNO_3)
HA – Hydrochloric Acid (HCl)
SH – Sodium Hydroxide (NaOH)
ST – Sodium Thiosulfate
ZN – Zinc acetate
SA – Sulfuric Acid (H_2SO_4)
4C – 4°C
AA – Ascorbic Acid
NO – No preservative
SS – Sodium sulfite

CONDITIONS UPON RECEIPT (CHECK ONE)
☐ Iced wet/Blue °C Temp
☐ Ambient °C Temp ☐ N/A

	YES	NO	N/A
Custody seals present/intact?	☐	☐	☐
Broken containers?	☐	☐	☐
COC agree with sample Labels?	☐	☐	☐
Correct containers for testing?	☐	☐	☐
Headspace issues acceptable?	☐	☐	☐
Holding time(s) acceptable?	☐	☐	☐
Preservative pH's acceptable?	☐	☐	☐
Was pH left unadjusted?	☐	☐	☐
All samples listed on COC received?	☐	☐	☐
Samples properly preserved?	☐	☐	☐
Client's sample documents received?	☐	☐	☐
COC been relinquished?	☐	☐	☐
Are tests listed for each sample?	☐	☐	☐

Method of Shipment (check one): US Postal ☐ UPS ☐ FedEx ☐ MMLI ☐ Client ☐

Date Shipped:
Airbill#:

Logged in by: Location:

LAB NOTES:

Follow up action required: YES ☐ NO ☐

Client informed on: / /

Client Rep:

By:

Reviewed by:

Date: / /

SAMPLE CATEGORY = TC

KENTUCKY DIVISION OF WATER / DRINKING WATER BRANCH
BACTERIOLOGICAL ANALYSIS REPORT FORM

General Information – This Section To Be Completed By Collector

PWS ID: KY0180509

PWS Name: CRWD # 2

PWS Contact: Bill

PWS Address: 69 Marguerite New Concord Ky 42076

PWS Phone: 270-436-6304

Compliance Period (MMYYYY): 082009

Collection Date (MMDDYYYY): 08192009
(All Samples Reported on this Form were Collected on this Date.)

Collector Name: William Duncan 8-19-09
Signature/Date

General Information – This Section To Be Completed By Lab

Lab ID: 000 27

Lab Receipt Date (MMDDYYYY): 08192009

Analysis Date (MMDDYYYY): 08192009

Total Coliform Analysis Method Code: 098

E Coli Analysis Method Code:

Lab Analyst: Mindy Martin 8/20/09
Signature/Date

Lab Supervisor: [signature] 8/20/09
Signature/Date

Sample Information – This Section To Be Completed By Collector

Sample Type (RT, RP, or SP) (See Key)	Special Sample Reason (A, B, C, D, or E) (See Key)	Replacement Sample? (Y or Blank)	Location Code (See Instructions)	Repeat Location Code (DN, UP, or OR) (See Key)	Sample Time (24 hr)	Free Chlorine (Required for all disinfectants except Chloramine)	Total Chlorine (Required when disinfectant is Chloramine)
RT			001		0690	1.11	1.17
						.	.
						.	.
						.	.
						.	.
						.	.
						.	.
						.	.
						.	.
						.	.

Analysis Information – This Section To Be Completed By Lab

Lab Sample Number	Analysis Time (24 hr)	Result (Total Coliform Count - or - TNTC - or - CNFG) (See Key)	Total Coliform (P/A)	E Coli (P/A)	Lab Sample Number of Original Sample (Required for Repeat and/or Replacement Samples) (See Instructions)
AG91239	1040		A		

The signatories of this form certify by their signatures that collection and analysis of the water sample analyzed and the resulting data hereby submitted, were completed in accordance with the provisions of 401 KAR Chapter 8, specifically including but not limited to 401 KAR 8:200, Section 1 and 401 KAR 8:040; and that the data submitted on this form is a true and accurate report of the results of collection and analysis performed pursuant to the above-referenced regulations. Violations of 401 KAR Chapter 8 are subject to severe penalties prescribed in KRS 224.99-010, up to $25,000 fine per day per violation and in some cases a violation may subject the violator to prison.

BACTERIOLOGICAL ANALYSIS REPORT FROM KEY

Sample Type:	RT = Routine (For Compliance)	RP = Repeat (For Compliance)	SP = Special (Not for Compliance)
Special Sample Reason: (Only If Sample Type = SP)	A = Suspected Contamination B = New Plant, Modification, or Line Extension	C = Treatment Modification D = Study/Investigation	E = Line Break, Emergency Repair
Repeat Location Code: (Only If Sample Type = RP)	DN = Downstream	UP = Upstream	OR = Original Site

McCoy & McCoy Laboratories, Inc.
www.mccoylabs.com

PO Box 907 * 825 Industrial Rd.
Madisonville, KY 42431
270.821.7375
270.825.9200 fax

2456 Fortune Dr., Suite 160
Lexington, KY 40509
859.299.7775
859.299.7785 fax

173 Island Creek Rd.
Pikeville, KY 41501
606.432.3104
606.432.3171 fax

1800 Kentucky Ave.
Paducah, KY 42003
270.444.6547
270.444.6572 fax

5510 Fern Valley Rd.
Suite 104 Promenade Pavilion
Louisville, KY 40228
502.961.0001

SHADED AREA FOR LAB USE ONLY

CHAIN OF CUSTODY and ANALYTICAL REQUEST

Please print legibly.

Client:	Bill To:	Send Results to:	Compliance Monitoring (check one)? Yes ☐ No ☐ / Samples Chlorinated (check one)? Yes ☐ No ☐	PO#
CRWD # 2				
Phone/Email:	Phone/Email	Phone/Email:	PWS ID# / STATE	
Batch#	Project Name	Collected by (Signature): Bill	MMLI Quote # (if applicable)	

Sample ID#	COLLECTION DATE	COLLECTION TIME (24 hr)	SAMPLE DESCRIPTION Composite samples indicate begin time, end time and temp (°C) at end time	SAMPLE ANALYSIS REQUESTED Method ID if known (i.e. 8260B, 6010B/7470A...)	SAMPLE REMARKS (i.e. composite, grab, field readings, corrosive...)	Field Data pH S.U.	Field Data Temp °C	# OF CONTAINERS	MATRIX CODE (See Lower Left)	PRESERVATIVE CODE (See Lower Left)
	8-19-09	0630	001	RT						

1. Expedited services not available for all services, please call. 2. Samples received unannounced with less than 48 hours holding time remaining may be subject to additional surcharges. 3. Lab reserves the right to return unused portions of samples to client.

Relinquished by: (Signature)	Received By: (Signature)	DATE	TIME (24 hr)
William Duncan	[signature]	8-19-09	0900
Relinquished by: (Signature)	Received by: (Signature)	DATE	TIME (24 hr)
Relinquished by: (Signature)	Received for MMLI by:	DATE	TIME (24 hr)

MATRIX CODES:
DW – Drinking Water
SW – Solid Waste
SO – Soil/Solid
SL – Sludge
GW – Ground Water
WW – Waste Water
OL – Oil
SU – Surface Water

PRESERVATIVE CODES:
NI – Nitric acid (HNO_3)
HA – Hydrochloric Acid (HCl)
SH – Sodium Hydroxide (NaOH)
ST – Sodium Thiosulfate
ZN – Zinc acetate
SA – Sulfuric Acid (H_2SO_4)
4C – 4°C
AA – Ascorbic Acid
NO – No preservative
SS – Sodium sulfite

CONDITIONS UPON RECEIPT (CHECK ONE)
☐ Iced wet/Blue ____ °C Temp
☐ Ambient ____ °C Temp ☐ N/A

	YES	NO	N/A
Custody seals present/intact?	☐	☐	☐
Broken containers?	☐	☐	☐
COC agree with sample Labels?	☐	☐	☐
Correct containers for testing?	☐	☐	☐
Headspace issues acceptable?	☐	☐	☐
Holding time(s) acceptable?	☐	☐	☐
Preservative pH's acceptable?	☐	☐	☐
Was pH left unadjusted?	☐	☐	☐
All samples listed on COC received?	☐	☐	☐
Samples properly preserved?	☐	☐	☐
Client's sample documents received?	☐	☐	☐
COC been relinquished?	☐	☐	☐
Are tests listed for each sample?	☐	☐	☐

Method of Shipment (check one): US Postal ☐ UPS ☐ FedEx ☐ MMLI ☐ Client ☐
Date Shipped:
Airbill#:
Logged in by: Location:
LAB NOTES:
Follow up action required: YES ☐ NO ☐
Client informed on: / /
Client Rep:
By:
Reviewed by:
Date: / /

SAMPLE CATEGORY = TC

KENTUCKY DIVISION OF WATER / DRINKING WATER BRANCH
BACTERIOLOGICAL ANALYSIS REPORT FORM

General Information – This Section To Be Completed By Collector

PWS ID: KY0180595

PWS Name: CRWD # 3

PWS Contact: Bill

PWS Address: 69 Marguerite New Concord Ky 42076

PWS Phone: 270-436-6304

Compliance Period (MMYYYY): 082009

Collection Date (MMDDYYYY): 08192009
(All Samples Reported on this Form were Collected on this Date.)

Collector Name: William Duncan 8-19-09
Signature/Date

General Information – This Section To Be Completed By Lab

Lab ID: 00001

Lab Receipt Date (MMDDYYYY): 08192009

Analysis Date (MMDDYYYY): 08192009

Total Coliform Analysis Method Code: 098

E Coli Analysis Method Code:

Lab Analyst: Minde Martin 8/20/09
Signature/Date

Lab Supervisor: [signature] 8/20/09
Signature/Date

Sample Information – This Section To Be Completed By Collector

Sample Type (RT, RP, or SP) (See Key)	Special Sample Reason (A, B, C, D, or E) (See Key)	Replacement Sample? (Y or Blank)	Location Code (See Instructions)	Repeat Location Code (DN, UP, or OR) (See Key)	Sample Time (24 hr)	Free Chlorine (Required for all disinfectants except Chloramine)	Total Chlorine (Required when disinfectant is Chloramine)
RT			001		0900	1.35	1.37

Analysis Information – This Section To Be Completed By Lab

Lab Sample Number	Analysis Time (24 hr)	Result (Total Coliform Count - or - TNTC - or - CNFG) (See Key)	Total Coliform (P/A)	E Coli (P/A)	Lab Sample Number of Original Sample (Required for Repeat and/or Replacement Samples) (See Instructions)
AG97240	1900		A		

The signatories of this form certify by their signatures that collection and analysis of the water sample analyzed and the resulting data hereby submitted, were completed in accordance with the provisions of 401 KAR Chapter 8, specifically including but not limited to 401 KAR 8:200, Section 1 and 401 KAR 8:040; and that the data submitted on this form is a true and accurate report of the results of collection and analysis performed pursuant to the above-referenced regulations. Violations of 401 KAR Chapter 8 are subject to severe penalties prescribed in KRS 224.99-010, up to $25,000 fine per day per violation and in some cases a violation may subject the violator to prison.

BACTERIOLOGICAL ANALYSIS REPORT FROM KEY

Sample Type:	RT = Routine (For Compliance)	RP = Repeat (For Compliance)	SP = Special (Not for Compliance)
Special Sample Reason: (Only if Sample Type = SP)	A = Suspected Contamination B = New Plant, Modification, or Line Extension	C = Treatment Modification D = Study/Investigation	E = Line Break, Emergency Repair
Repeat Location Code: (Only if Sample Type = RP)	DN = Downstream	UP = Upstream	OR = Original Site

McCoy & McCoy Laboratories, Inc.
www.mccoylabs.com

PO Box 907 * 825 Industrial Rd.
Madisonville, KY 42431
270.821.7375
270.825.9200 fax

2456 Fortune Dr., Suite 160
Lexington, KY 40509
859.299.7775
859.299.7785 fax

173 Island Creek Rd.
Pikeville, KY 41501
606.432.3104
606.432.3171 fax

1800 Kentucky Ave.
Paducah, KY 42003
270.444.6547
270.444.6572 fax

5510 Fern Valley Rd.
Suite 104 Promenade Pavilion
Louisville, KY 40228
502.961.0001

SHADED AREA FOR LAB USE ONLY

CHAIN OF CUSTODY and ANALYTICAL REQUEST

Please print legibly

Client: CRWD #3

Phone/Email:

Bill To:

Phone/Email

Send Results to:

Phone/Email:

Compliance Monitoring (check one)? Yes ☐ No ☐

Samples Chlorinated (check one)? Yes ☐ No ☐

PO#

PWS ID#

STATE

Batch#

Project Name

Collected by (Signature): Bil

MMLI Quote # (if applicable)

Sample ID#	COLLECTION DATE	COLLECTION TIME (24 hr)	SAMPLE DESCRIPTION Composite samples indicate begin time, end time and temp (°C) at end time	SAMPLE ANALYSIS REQUESTED Method ID if known (i.e. 8260B, 6010B/7470A...)	SAMPLE REMARKS (i.e. composite, grab, field readings, corrosive...)	Field Data pH S.U.	Field Data Temp °C	# OF CONTAINERS	MATRIX CODE (See Lower Left)	PRESERVATIVE CODE (See Lower Left)
	8-19-09	0600	001	RT						

1. Expedited services not available for all services, please call. 2. Samples received unannounced with less than 48 hours holding time remaining may be subject to additional surcharges. 3. Lab reserves the right to return unused portions of samples to client.

Relinquished by: (Signature)	Received By: (Signature)	DATE	TIME (24 hr)
William Duncan	[signature]	8-19-09	0900
Relinquished by: (Signature)	Received by: (Signature)	DATE	TIME (24 hr)
Relinquished by: (Signature)	Received for MMLI by:	DATE	TIME (24 hr)

CONDITIONS UPON RECEIPT (CHECK ONE)
☐ Iced wet/Blue °C Temp
☐ Ambient °C Temp ☐ N/A

	YES	NO	N/A
Custody seals present/intact?	☐	☐	☐
Broken containers?	☐	☐	☐
COC agree with sample Labels?	☐	☐	☐
Correct containers for testing?	☐	☐	☐
Headspace issues acceptable?	☐	☐	☐
Holding time(s) acceptable?	☐	☐	☐
Preservative pH's acceptable?	☐	☐	☐
Was pH left unadjusted?	☐	☐	☐
All samples listed on COC received?	☐	☐	☐
Samples properly preserved?	☐	☐	☐
Client's sample documents received?	☐	☐	☐
COC been relinquished?	☐	☐	☐
Are tests listed for each sample?	☐	☐	☐

Method of Shipment (check one): US Postal ☐ UPS ☐ FedEx ☐ MMLI ☐ Client ☐

Date Shipped:
Airbill#:

Logged in by: Location:

LAB NOTES

Follow up action required YES ☐ NO ☐

Client informed on:

Client Rep.

By:

Reviewed by:

Date:

MATRIX CODES:
DW – Drinking Water
SW – Solid Waste
SO – Soil/Solid
SL – Sludge
GW – Ground Water
WW – Waste Water
OL – Oil
SU – Surface Water

PRESERVATIVE CODES:
NI – Nitric acid (HNO_3)
HA – Hydrochloric Acid (HCl)
SH – Sodium Hydroxide (NaOH)
ST – Sodium Thiosulfate
ZN – Zinc acetate
SA – Sulfuric Acid (H_2SO_4)
4C – 4°C
AA – Ascorbic Acid
NO – No preservative
SS – Sodium sulfite

SAMPLE CATEGORY = TC

KENTUCKY DIVISION OF WATER / DRINKING WATER BRANCH
BACTERIOLOGICAL ANALYSIS REPORT FORM

General Information – This Section To Be Completed By Collector

PWS ID: KY0183106

PWS Name: CRWD # 4

PWS Contact: Bill

PWS Address: 69 Marguerite New Concord Ky 42076

PWS Phone: 270-436-6304

Compliance Period (MMYYYY): 0920 09

Collection Date (MMDDYYYY): 08 19 2009
(All Samples Reported on this Form were Collected on this Date.)

Collector Name: William Duncan 8-19-09
Signature/Date

General Information – This Section To Be Completed By Lab

Lab ID: 00207

Lab Receipt Date (MMDDYYYY): 08 19 0009

Analysis Date (MMDDYYYY): 08 19 0009

Total Coliform Analysis Method Code: 008

E Coli Analysis Method Code:

Lab Analyst: Mindy Martin 8/20/09
Signature/Date

Lab Supervisor: [signature] 8/20/09
Signature/Date

Sample Information – This Section To Be Completed By Collector

Sample Type (RT, RP, or SP) (See Key)	Special Sample Reason (A, B, C, D, or E) (See Key)	Replacement Sample? (Y or Blank)	Location Code (See Instructions)	Repeat Location Code (DN, UP, or OR) (See Key)	Sample Time (24 hr)	Free Chlorine (Required for all disinfectants except Chloramine)	Total Chlorine (Required when disinfectant is Chloramine)
RT			001		0800	1.18	1.24
						.	.
						.	.
						.	.
						.	.
						.	.
						.	.
						.	.
						.	.
						.	.

Analysis Information – This Section To Be Completed By Lab

Lab Sample Number	Analysis Time (24 hr)	Result (Total Coliform Count - or - TNTC - or - CNFG) (See Key)	Total Coliform (P/A)	E Coli (P/A)	Lab Sample Number of Original Sample (Required for Repeat and/or Replacement Samples) (See Instructions)
AG91241	1040		A		

The signatories of this form certify by their signatures that collection and analysis of the water sample analyzed and the resulting data hereby submitted, were completed in accordance with the provisions of 401 KAR Chapter 8, specifically including but not limited to 401 KAR 8:200, Section 1 and 401 KAR 8:040; and that the data submitted on this form is a true and accurate report of the results of collection and analysis performed pursuant to the above-referenced regulations. Violations of 401 KAR Chapter 8 are subject to severe penalties prescribed in KRS 224.99-010, up to $25,000 fine per day per violation and in some cases a violation may subject the violator to prison.

BACTERIOLOGICAL ANALYSIS REPORT FROM KEY

Sample Type:	RT = Routine (For Compliance)	RP = Repeat (For Compliance)	SP = Special (Not for Compliance)
Special Sample Reason: (Only If Sample Type = SP)	A = Suspected Contamination B = New Plant, Modification, or Line Extension	C = Treatment Modification D = Study/Investigation	E = Line Break, Emergency Repair
Repeat Location Code:	DN = Downstream	UP = Upstream	OR = Original Site

McCoy & McCoy Laboratories, Inc.
www.mccoylabs.com

PO Box 907 * 825 Industrial Rd.
Madisonville, KY 42431
270.821.7375
270.825.9200 fax

2456 Fortune Dr., Suite 160
Lexington, KY 40509
859.299.7775
859.299.7785 fax

173 Island Creek Rd.
Pikeville, KY 41501
606.432.3104
606.432.3171 fax

1800 Kentucky Ave.
Paducah, KY 42003
270.444.6547
270.444.6572 fax

5510 Fern Valley Rd.
Suite 104 Promenade Pavilion
Louisville, KY 40228
502.961.0001

CHAIN OF CUSTODY and ANALYTICAL REQUEST

Please print legibly

SHADED AREA FOR LAB USE ONLY

Client: CRWD # 4

Phone/Email:

Bill To:

Phone/Email

Send Results to:

Phone/Email:

Compliance Monitoring (check one)? Yes ☐ No ☐

Samples Chlorinated (check one)? Yes ☐ No ☐

PO#

PWS ID#

STATE

MMLI Quote # (if applicable)

Batch#

Project Name

Collected by (Signature): Bill

Sample ID#	COLLECTION DATE	COLLECTION TIME (24 hr)	SAMPLE DESCRIPTION Composite samples indicate begin time, end time and temp (°C) at end time	SAMPLE ANALYSIS REQUESTED Method ID if known (i.e. 8260B, 6010B/7470A...)	SAMPLE REMARKS (i.e. composite, grab, field readings, corrosive...)	Field Data pH S.U.	Field Data Temp °C	# OF CONTAINERS	MATRIX CODE (See Lower Left)	PRESERVATIVE CODE (See Lower Left)
	8-19-09	0800	001	RT						

1. Expedited services not available for all services, please call. 2. Samples received unannounced with less than 48 hours holding time remaining may be subject to additional surcharges. 3. Lab reserves the right to return unused portions of samples to client.

Relinquished by: (Signature)	Received By: (Signature)	DATE	TIME (24 hr)
William Duncan	[signature]	8-19-09	0900
Relinquished by: (Signature)	Received by: (Signature)	DATE	TIME (24 hr)
Relinquished by: (Signature)	Received for MMLI by:	DATE	TIME (24 hr)

MATRIX CODES:
DW – Drinking Water
SW – Solid Waste
SO – Soil/Solid
SL – Sludge
GW – Ground Water
WW – Waste Water
OL – Oil
SU – Surface Water

PRESERVATIVE CODES:
NI – Nitric acid (HNO_3)
HA – Hydrochloric Acid (HCl)
SH – Sodium Hydroxide (NaOH)
ST – Sodium Thiosulfate
ZN – Zinc acetate
SA – Sulfuric Acid (H_2SO_4)
4C – 4°C
AA – Ascorbic Acid
NO – No preservative
SS – Sodium sulfite

CONDITIONS UPON RECEIPT (CHECK ONE)
☐ Iced wet/Blue ____ °C Temp
☐ Ambient ____ °C Temp ☐ N/A

	YES	NO	N/A
Custody seals present/intact?	☐	☐	☐
Broken containers?	☐	☐	☐
COC agree with sample Labels?	☐	☐	☐
Correct containers for testing?	☐	☐	☐
Headspace issues acceptable?	☐	☐	☐
Holding time(s) acceptable?	☐	☐	☐
Preservative pH's acceptable?	☐	☐	☐
Was pH left unadjusted?	☐	☐	☐
All samples listed on COC received?	☐	☐	☐
Samples properly preserved?	☐	☐	☐
Client's sample documents received?	☐	☐	☐
COC been relinquished?	☐	☐	☐
Are tests listed for each sample?	☐	☐	☐

Method of Shipment (check one): US Postal ☐ UPS ☐ FedEx ☐ MMLI ☐ Client ☐

Date Shipped:
Airbill#:
Logged in by: ____ Location: ____
LAB NOTES:

Follow up action required: YES ☐ NO ☐
Client informed on: ____
Client Rep: ____
By: ____
Reviewed by: ____
Date: ____

SAMPLE CATEGORY = TC

KENTUCKY DIVISION OF WATER / DRINKING WATER BRANCH
BACTERIOLOGICAL ANALYSIS REPORT FORM

General Information – This Section To Be Completed By Collector

PWS ID: KY0180549

Compliance Period (MMYYYY): 082009

PWS Name: CRWD #1

PWS Contact: Bill

Collection Date (MMDDYYYY): 08262009
(All Samples Reported on this Form were Collected on this Date.)

PWS Address: 69 Marguerite New Concord Ky 42076

PWS Phone: 270-436-6304

Collector Name: William Duncan 8-26-09
Signature/Date

General Information – This Section To Be Completed By Lab

Lab ID: 00001

Lab Receipt Date (MMDDYYYY): 08262009

Total Coliform Analysis Method Code: 080

Analysis Date (MMDDYYYY): 08272009

E Coli Analysis Method Code:

Lab Analyst: Mindy Matthews 8/27/09
Signature/Date

Lab Supervisor: 8/27/09
Signature/Date

Sample Information – This Section To Be Completed By Collector

Sample Type (RT, RP, or SP) (See Key)	Special Sample Reason (A, B, C, D, or E) (See Key)	Replacement Sample? (Y or Blank)	Location Code (See Instructions)	Repeat Location Code (DN, UP, or OR) (See Key)	Sample Time (24 hr)	Free Chlorine (Required for all disinfectants except Chloramine)	Total Chlorine (Required when disinfectant is Chloramine)
RT			003		0730	1.27	1.30
						.	.
						.	.
						.	.
						.	.
						.	.
						.	.
						.	.
						.	.
						.	.

Analysis Information – This Section To Be Completed By Lab

Lab Sample Number	Analysis Time (24 hr)	Result (Total Coliform Count - or - TNTC - or - CNFG) (See Key)	Total Coliform (P/A)	E Coli (P/A)	Lab Sample Number of Original Sample (Required for Repeat and/or Replacement Samples) (See Instructions)
A59925119	1300		A		

The signatories of this form certify by their signatures that collection and analysis of the water sample analyzed and the resulting data hereby submitted, were completed in accordance with the provisions of 401 KAR Chapter 8, specifically including but not limited to 401 KAR 8:200, Section 1 and 401 KAR 8:040; and that the data submitted on this form is a true and accurate report of the results of collection and analysis performed pursuant to the above-referenced regulations. Violations of 401 KAR Chapter 8 are subject to severe penalties prescribed in KRS 224.99-010, up to $25,000 fine per day per violation and in some cases a violation may subject the violator to prison.

BACTERIOLOGICAL ANALYSIS REPORT FROM KEY

Sample Type:	RT = Routine (For Compliance)	RP = Repeat (For Compliance)	SP = Special (Not for Compliance)
Special Sample Reason: (Only If Sample Type = SP)	A = Suspected Contamination B = New Plant, Modification, or Line Extension	C = Treatment Modification D = Study/Investigation	E = Line Break, Emergency Repair
Repeat Location Code: (Only If Sample Type = RP)	DN = Downstream	UP = Upstream	OR = Original Site

McCoy & McCoy Laboratories, Inc.
www.mccoylabs.com

PO Box 907 * 825 Industrial Rd.
Madisonville, KY 42431
270.821.7375
270.825.9200 fax

2456 Fortune Dr., Suite 160
Lexington, KY 40509
859.299.7775
859.299.7785 fax

173 Island Creek Rd.
Pikeville, KY 41501
606.432.3104
606.432.3171 fax

1800 Kentucky Ave.
Paducah, KY 42003
270.444.6547
270.444.6572 fax

5510 Fern Valley Rd.
Suite 104 Promenade Pavilion
Louisville, KY 40228
502.961.0001

CHAIN OF CUSTODY and ANALYTICAL REQUEST

Please print legibly.

SHADED AREA FOR LAB USE ONLY

Client:	Bill To:	Send Results to:	Compliance Monitoring (check one)? Yes ☐ No ☐ Samples Chlorinated (check one)? Yes ☐ No ☐	PO#
CRWD #1				
Phone/Email:	Phone/Email	Phone/Email:	PWS ID# / STATE	
Batch#	Project Name	Collected by (Signature): BJO	MMLI Quote # (if applicable)	

Sample ID#	COLLECTION DATE	COLLECTION TIME (24 hr)	SAMPLE DESCRIPTION Composite samples indicate begin time, end time and temp (°C) at end time	SAMPLE ANALYSIS REQUESTED Method ID if known (i.e. 8260B, 6010B/7470A...)	SAMPLE REMARKS (i.e. composite, grab, field readings, corrosive...)	Field Data pH S.U.	Field Data Temp °C	# OF CONTAINERS	MATRIX CODE (See Lower Left)	PRESERVATIVE CODE (See Lower Left)
	8-26-09	0730	002	RT						

1. Expedited services not available for all services, please call. 2. Samples received unannounced with less than 48 hours holding time remaining may be subject to additional surcharges. 3. Lab reserves the right to return unused portions of samples to client.

Relinquished by: (Signature)	Received By: (Signature)	DATE	TIME (24 hr)
William Duncan	David Pickett	8-26-09	0900
Relinquished by: (Signature)	Received by: (Signature)	DATE	TIME (24 hr)
Relinquished by: (Signature)	Received for MMLI by:	DATE	TIME (24 hr)

CONDITIONS UPON RECEIPT (CHECK ONE)
☐ Iced wet/Blue ____ °C Temp
☐ Ambient ____ °C Temp ☐ N/A

	YES	NO	N/A
Custody seals present/intact?	☐	☐	☐
Broken containers?	☐	☐	☐
COC agree with sample Labels?	☐	☐	☐
Correct containers for testing?	☐	☐	☐
Headspace issues acceptable?	☐	☐	☐
Holding time(s) acceptable?	☐	☐	☐
Preservative pH's acceptable?	☐	☐	☐
Was pH left unadjusted?	☐	☐	☐
All samples listed on COC received?	☐	☐	☐
Samples properly preserved?	☐	☐	☐
Client's sample documents received?	☐	☐	☐
COC been relinquished?	☐	☐	☐
Are tests listed for each sample?	☐	☐	☐

Method of Shipment (check one): UPS ☐ FedEx ☐ MMLI ☐ US Postal ☐ Client ☐
Date Shipped:
Airbill#:
Logged in by: Location:
LAB NOTES:
Follow up action required: YES ☐ NO ☐
Client informed on:
Client Rep:
By:
Reviewed by:
Date:

MATRIX CODES:
DW – Drinking Water
SW – Solid Waste
SO – Soil/Solid
SL – Sludge
GW – Ground Water
WW – Waste Water
OL – Oil
SU – Surface Water

PRESERVATIVE CODES:
NI – Nitric acid (HNO_3)
HA – Hydrochloric Acid (HCl)
SH – Sodium Hydroxide (NaOH)
ST – Sodium Thiosulfate
ZN – Zinc acetate
SA – Sulfuric Acid (H_2SO_4)
4C – 4°C
AA – Ascorbic Acid
NO – No preservative
SS – Sodium sulfite

SAMPLE CATEGORY = TC

KENTUCKY DIVISION OF WATER / DRINKING WATER BRANCH
BACTERIOLOGICAL ANALYSIS REPORT FORM

General Information – This Section To Be Completed By Collector

PWS ID: KY0180509

Compliance Period (MMYYYY): 082009

PWS Name: CRWD # 2

PWS Contact: Bill

Collection Date (MMDDYYYY): 08262009 (All Samples Reported on this Form were Collected on this Date.)

PWS Address: 69 Marguerite New Concord Ky 42076

PWS Phone: 270-436-6304

Collector Name: William Duncan 8-26-09 (Signature/Date)

General Information – This Section To Be Completed By Lab

Lab ID: 00057

Lab Receipt Date (MMDDYYYY): 08262009

Total Coliform Analysis Method Code: 098

Analysis Date (MMDDYYYY): 08272009

E Coli Analysis Method Code:

Lab Analyst: Mindy Martin 8/27/09 (Signature/Date)

Lab Supervisor: 9/02/09 (Signature/Date)

Sample Information – This Section To Be Completed By Collector

Sample Type (RT, RP, or SP) (See Key)	Special Sample Reason (A, B, C, D, or E) (See Key)	Replacement Sample? (Y or Blank)	Location Code (See Instructions)	Repeat Location Code (DN, UP, or OR) (See Key)	Sample Time (24 hr)	Free Chlorine (Required for all disinfectants except Chloramine)	Total Chlorine (Required when disinfectant is Chloramine)
RT			289		0630	1.99	1.09

Analysis Information – This Section To Be Completed By Lab

Lab Sample Number	Analysis Time (24 hr)	Result (Total Coliform Count - or - TNTC - or - CNFG) (See Key)	Total Coliform (P/A)	E Coli (P/A)	Lab Sample Number of Original Sample (Required for Repeat and/or Replacement Samples) (See Instructions)
AG92520	1300		A		

The signatories of this form certify by their signatures that collection and analysis of the water sample analyzed and the resulting data hereby submitted, were completed in accordance with the provisions of 401 KAR Chapter 8, specifically including but not limited to 401 KAR 8:200, Section 1 and 401 KAR 8:040; and that the data submitted on this form is a true and accurate report of the results of collection and analysis performed pursuant to the above-referenced regulations. Violations of 401 KAR Chapter 8 are subject to severe penalties prescribed in KRS 224.99-010, up to $25,000 fine per day per violation and in some cases a violation may subject the violator to prison.

BACTERIOLOGICAL ANALYSIS REPORT FROM KEY

Sample Type:	RT = Routine (For Compliance)	RP = Repeat (For Compliance)	SP = Special (Not for Compliance)
Special Sample Reason: (Only If Sample Type = SP)	A = Suspected Contamination B = New Plant, Modification, or Line Extension	C = Treatment Modification D = Study/Investigation	E = Line Break, Emergency Repair
Repeat Location Code: (Only If Sample Type = RP)	DN = Downstream	UP = Upstream	OR = Original Site

McCoy & McCoy Laboratories, Inc.
www.mccoylabs.com

PO Box 907 * 825 Industrial Rd.
Madisonville, KY 42431
270.821.7375
270.825.9200 fax

2456 Fortune Dr., Suite 160
Lexington, KY 40509
859.299.7775
859.299.7785 fax

173 Island Creek Rd.
Pikeville, KY 41501
606.432.3104
606.432.3171 fax

1800 Kentucky Ave.
Paducah, KY 42003
270.444.6547
270.444.6572 fax

5510 Fern Valley Rd.
Suite 104 Promenade Pavilion
Louisville, KY 40228
502.961.0001

CHAIN OF CUSTODY and ANALYTICAL REQUEST

Please print legibly

SHADED AREA FOR LAB USE ONLY

Client:	Bill To:	Send Results to:	Compliance Monitoring (check one)? Yes ☐ No ☐ Samples Chlorinated (check one)? Yes ☐ No ☐	PO#
CRWD #2				
Phone/Email:	Phone/Email	Phone/Email:	PWS ID# / STATE	
Batch#	Project Name	Collected by (Signature): Bill	MMLI Quote # (if applicable)	

Sample ID#	COLLECTION DATE	COLLECTION TIME (24 hr)	SAMPLE DESCRIPTION Composite samples indicate begin time, end time and temp (°C) at end time	SAMPLE ANALYSIS REQUESTED Method ID if known (i.e. 8260B, 6010B/7470A...)	SAMPLE REMARKS (i.e. composite, grab, field readings, corrosive...)	Field Data pH S.U.	Field Data Temp °C	# OF CONTAINERS	MATRIX CODE (See Lower Left)	PRESERVATIVE CODE (See Lower Left)
	8-26-09	0630	002	RT						

1. Expedited services not available for all services, please call. 2. Samples received unannounced with less than 48 hours holding time remaining may be subject to additional surcharges. 3. Lab reserves the right to return unused portions of samples to client.

Relinquished by: (Signature)	Received By: (Signature)	DATE	TIME (24 hr)
William Duncan	Derek Blank	8-26-09	0900
Relinquished by: (Signature)	Received by: (Signature)	DATE	TIME (24 hr)
Relinquished by: (Signature)	Received for MMLI by:	DATE	TIME (24 hr)

CONDITIONS UPON RECEIPT (CHECK ONE)
☐ Iced wet/Blue °C Temp
☐ Ambient °C Temp ☐ N/A

	YES	NO	N/A
Custody seals present/intact?	☐	☐	☐
Broken containers?	☐	☐	☐
COC agree with sample Labels?	☐	☐	☐
Correct containers for testing?	☐	☐	☐
Headspace issues acceptable?	☐	☐	☐
Holding time(s) acceptable?	☐	☐	☐
Preservative pH's acceptable?	☐	☐	☐
Was pH left unadjusted?	☐	☐	☐
All samples listed on COC received?	☐	☐	☐
Samples properly preserved?	☐	☐	☐
Client's sample documents received?	☐	☐	☐
COC been relinquished?	☐	☐	☐
Are tests listed for each sample?	☐	☐	☐

Method of Shipment (check one): UPS ☐ FedEx ☐ MMLI ☐ US Postal ☐ Client ☐
Date Shipped:
Airbill #:
Logged in by: Location:
LAB NOTES:
Follow up action required YES ☐ NO ☐
Client informed on:
Client Rep:
By:
Reviewed by:
Date:

MATRIX CODES:
DW – Drinking Water
SW – Solid Waste
SO – Soil/Solid
SL – Sludge
GW – Ground Water
WW – Waste Water
OL – Oil
SU – Surface Water

PRESERVATIVE CODES:
NI – Nitric acid (HNO_3)
HA – Hydrochloric Acid (HCl)
SH – Sodium Hydroxide (NaOH)
ST – Sodium Thiosulfate
ZN – Zinc acetate
SA – Sulfuric Acid (H_2SO_4)
4C – 4°C
AA – Ascorbic Acid
NO – No preservative
SS – Sodium sulfite

SAMPLE CATEGORY = TC

KENTUCKY DIVISION OF WATER / DRINKING WATER BRANCH
BACTERIOLOGICAL ANALYSIS REPORT FORM

General Information – This Section To Be Completed By Collector

PWS ID: KY0180509

Compliance Period (MMYYYY): 072009

PWS Name: CRWD # 3

PWS Contact: Bill

Collection Date (MMDDYYYY): 07282009
(All Samples Reported on this Form were Collected on this Date.)

PWS Address: 69 Marguerite Ave Concord Ky 42076

PWS Phone: 270-436-6304

Collector Name: William Duncan 8-28-09
Signature/Date

General Information – This Section To Be Completed By Lab

Lab ID: 00091

Lab Receipt Date (MMDDYYYY): 08262009

Analysis Date (MMDDYYYY): 08262009

Total Coliform Analysis Method Code: 028

E Coli Analysis Method Code:

Lab Analyst: Mindy Martin 8/27/09
Signature/Date

Lab Supervisor: 8/27/09
Signature/Date

Sample Information – This Section To Be Completed By Collector

Sample Type (RT, RP, or SP) (See Key)	Special Sample Reason (A, B, C, D, or E) (See Key)	Replacement Sample? (Y or Blank)	Location Code (See Instructions)	Repeat Location Code (DN, UP, or OR) (See Key)	Sample Time (24 hr)	Free Chlorine (Required for all disinfectants except Chloramine)	Total Chlorine (Required when disinfectant is Chloramine)
RT			008		0828	1.07	1.15
						.	.
						.	.
						.	.
						.	.
						.	.
						.	.
						.	.
						.	.
						.	.

Analysis Information – This Section To Be Completed By Lab

Lab Sample Number	Analysis Time (24 hr)	Result (Total Coliform Count - or - TNTC - or - CNFG) (See Key)	Total Coliform (P/A)	E Coli (P/A)	Lab Sample Number of Original Sample (Required for Repeat and/or Replacement Samples) (See Instructions)
AG92521	1300		A		

The signatories of this form certify by their signatures that collection and analysis of the water sample analyzed and the resulting data hereby submitted, were completed in accordance with the provisions of 401 KAR Chapter 8, specifically including but not limited to 401 KAR 8:200, Section 1 and 401 KAR 8:040; and that the data submitted on this form is a true and accurate report of the results of collection and analysis performed pursuant to the above-referenced regulations. Violations of 401 KAR Chapter 8 are subject to severe penalties prescribed in KRS 224.99-010, up to $25,000 fine per day per violation and in some cases a violation may subject the violator to prison.

BACTERIOLOGICAL ANALYSIS REPORT FROM KEY

Sample Type:	RT = Routine (For Compliance)	RP = Repeat (For Compliance)	SP = Special (Not for Compliance)
Special Sample Reason: (Only if Sample Type = SP)	A = Suspected Contamination B = New Plant, Modification, or Line Extension	C = Treatment Modification D = Study/Investigation	E = Line Break, Emergency Repair
Repeat Location Code: (Only if Sample Type = RP)	DN = Downstream	UP = Upstream	OR = Original Site

McCoy & McCoy Laboratories, Inc.
www.mccoylabs.com

PO Box 907 * 825 Industrial Rd.
Madisonville, KY 42431
270.821.7375
270.825.9200 fax

2456 Fortune Dr., Suite 160
Lexington, KY 40509
859.299.7775
859.299.7785 fax

173 Island Creek Rd.
Pikeville, KY 41501
606.432.3104
606.432.3171 fax

1800 Kentucky Ave.
Paducah, KY 42003
270.444.6547
270.444.6572 fax

5510 Fern Valley Rd.
Suite 104 Promenade Pavilion
Louisville, KY 40228
502.961.0001

SHADED AREA FOR LAB USE ONLY

CHAIN OF CUSTODY and ANALYTICAL REQUEST

Please print legibly.

Client:	Bill To:	Send Results to:	Compliance Monitoring (check one)? Yes ☐ No ☐ Samples Chlorinated (check one)? Yes ☐ No ☐	PO#
CRWD #3				
Phone/Email:	Phone/Email	Phone/Email:	PWS ID# / STATE	
Batch#	Project Name	Collected by (Signature): Bill	MMLI Quote # (if applicable)	

Sample ID#:	COLLECTION DATE	COLLECTION TIME (24 hr)	SAMPLE DESCRIPTION Composite samples indicate begin time, end time and temp (°C) at end time	SAMPLE ANALYSIS REQUESTED Method ID if known (i.e. 8260B, 6010B/7470A...)	SAMPLE REMARKS (i.e. composite, grab, field readings, corrosive...)	Field Data pH S.U.	Field Data Temp °C	# OF CONTAINERS	MATRIX CODE (See Lower Left)	PRESERVATIVE CODE (See Lower Left)
	8-26-09	0600	002	RT						

1. Expedited services not available for all services, please call. 2. Samples received unannounced with less than 48 hours holding time remaining may be subject to additional surcharges. 3. Lab reserves the right to return unused portions of samples to client.

Relinquished by: (Signature)	Received By: (Signature)	DATE	TIME (24 hr)
William Duncan	Derek [illegible]	8-26-09	0900
Relinquished by: (Signature)	Received by: (Signature)	DATE	TIME (24 hr)
Relinquished by: (Signature)	Received for MMLI by:	DATE	TIME (24 hr)

CONDITIONS UPON RECEIPT (CHECK ONE)
☐ iced wet/Blue °C Temp
☐ Ambient °C Temp ☐ N/A

	YES	NO	N/A
Custody seals present/intact?	☐	☐	☐
Broken containers?	☐	☐	☐
COC agree with sample Labels?	☐	☐	☐
Correct containers for testing?	☐	☐	☐
Headspace issues acceptable?	☐	☐	☐
Holding time(s) acceptable?	☐	☐	☐
Preservative pHs acceptable?	☐	☐	☐
Was pH left unadjusted?	☐	☐	☐
All samples listed on COC received?	☐	☐	☐
Samples properly preserved?	☐	☐	☐
Client's sample documents received?	☐	☐	☐
COC been relinquished?	☐	☐	☐
Are tests listed for each sample?	☐	☐	☐

Method of Shipment (check one) US Postal ☐ UPS ☐ FedEx ☐ MMLI ☐ Client ☐
Date Shipped:
Airbill#:
Logged in by: Location:
LAB NOTES:
Follow up action required YES ☐ NO ☐
Client informed on:
Client Rep.:
By:
Reviewed by:
Date:

MATRIX CODES:
DW – Drinking Water
SW – Solid Waste
SO – Soil/Solid
SL – Sludge
GW – Ground Water
WW – Waste Water
OL – Oil
SU – Surface Water

PRESERVATIVE CODES:
NI – Nitric acid (HNO_3)
HA – Hydrochloric Acid (HCl)
SH – Sodium Hydroxide (NaOH)
ST – Sodium Thiosulfate
ZN – Zinc acetate
SA – Sulfuric Acid (H_2SO_4)
4C – 4°C
AA – Ascorbic Acid
NO – No preservative
SS – Sodium sulfite

SAMPLE CATEGORY = TC

KENTUCKY DIVISION OF WATER / DRINKING WATER BRANCH
BACTERIOLOGICAL ANALYSIS REPORT FORM

General Information – This Section To Be Completed By Collector

PWS ID: KY0183106

Compliance Period (MMYYYY): 082009

PWS Name: CRWD # 4

PWS Contact: Bill

Collection Date (MMDDYYYY): 08/26/09 (All Samples Reported on this Form were Collected on this Date.)

PWS Address: 69 Marguerite New Concord Ky 42076

PWS Phone: 270-436-6304

Collector Name: William Duncan 8-26-09 (Signature/Date)

General Information – This Section To Be Completed By Lab

Lab ID: 00297

Lab Receipt Date (MMDDYYYY): 08/26/2009

Total Coliform Analysis Method Code: 00

Analysis Date (MMDDYYYY): 08/26/2009

E Coli Analysis Method Code:

Lab Analyst: Mindy Martin 8/27/09 (Signature/Date)

Lab Supervisor: 8/27/09 (Signature/Date)

Sample Information – This Section To Be Completed By Collector / Analysis Information – This Section To Be Completed By Lab

Sample Type (RT, RP, or SP) (See Key)	Special Sample Reason (A, B, C, D, or E) (See Key)	Replacement Sample? (Y or Blank)	Location Code (See Instructions)	Repeat Location Code (DN, UP, or OR) (See Key)	Sample Time (24 hr)	Free Chlorine (Required for all disinfectants except Chloramine)	Total Chlorine (Required when disinfectant is Chloramine)	Lab Sample Number	Analysis Time (24 hr)	Result (Total Coliform Count - or - TNTC - or - CNFG) (See Key)	Total Coliform (P/A)	E Coli (P/A)	Lab Sample Number of Original Sample (Required for Repeat and/or Replacement Samples) (See Instructions)
RT			03		0800	1.31	1.37	A692523	1360		+		

The signatories of this form certify by their signatures that collection and analysis of the water sample analyzed and the resulting data hereby submitted, were completed in accordance with the provisions of 401 KAR Chapter 8, specifically including but not limited to 401 KAR 8:200, Section 1 and 401 KAR 8:040; and that the data submitted on this form is a true and accurate report of the results of collection and analysis performed pursuant to the above-referenced regulations. Violations of 401 KAR Chapter 8 are subject to severe penalties prescribed in KRS 224.99-010, up to $25,000 fine per day per violation and in some cases a violation may subject the violator to prison.

BACTERIOLOGICAL ANALYSIS REPORT FROM KEY

Sample Type:	RT = Routine (For Compliance)	RP = Repeat (For Compliance)	SP = Special (Not for Compliance)
Special Sample Reason: (Only if Sample Type = SP)	A = Suspected Contamination B = New Plant, Modification, or Line Extension	C = Treatment Modification D = Study/Investigation	E = Line Break, Emergency Repair
Repeat Location Code:	DN = Downstream	UP = Upstream	OR = Original Site

McCoy & McCoy Laboratories, Inc.
www.mccoylabs.com

PO Box 907 * 825 Industrial Rd.
Madisonville, KY 42431
270.821.7375
270.825.9200 fax

2456 Fortune Dr., Suite 160
Lexington, KY 40509
859.299.7775
859.299.7785 fax

173 Island Creek Rd.
Pikeville, KY 41501
606.432.3104
606.432.3171 fax

1800 Kentucky Ave.
Paducah, KY 42003
270.444.6547
270.444.6572 fax

5510 Fern Valley Rd.
Suite 104 Promenade Pavilion
Louisville, KY 40228
502.961.0001

SHADED AREA FOR LAB USE ONLY

CHAIN OF CUSTODY and ANALYTICAL REQUEST

Please print legibly.

Client:	Bill To:	Send Results to:	Compliance Monitoring (check one)? Yes ☐ No ☐	PO#
CKWD #4			Samples Chlorinated (check one)? Yes ☐ No ☐	
Phone/Email:	Phone/Email	Phone/Email:	PWS ID# / STATE	
Batch#	Project Name	Collected by (Signature): Bill	MMLI Quote # (if applicable)	

Sample ID#	COLLECTION DATE	COLLECTION TIME (24 hr)	SAMPLE DESCRIPTION Composite samples indicate begin time, end time and temp (°C) at end time	SAMPLE ANALYSIS REQUESTED Method ID if known (i.e. 8260B, 6010B/7470A...)	SAMPLE REMARKS (i.e. composite, grab, field readings, corrosive...)	Field Data pH S.U.	Field Data Temp °C	# OF CONTAINERS	MATRIX CODE (See Lower Left)	PRESERVATIVE CODE (See Lower Left)
	8-26-09	0800	003	RT						

1. Expedited services not available for all services, please call. 2. Samples received unannounced with less than 48 hours holding time remaining may be subject to additional surcharges. 3. Lab reserves the right to return unused portions of samples to client.

Relinquished by: (Signature)	Received By: (Signature)	DATE	TIME (24 hr)
William Duncan	[signature]	8-26-09	0900
Relinquished by: (Signature)	Received by: (Signature)	DATE	TIME (24 hr)
Relinquished by: (Signature)	Received for MMLI by:	DATE	TIME (24 hr)

MATRIX CODES:
DW – Drinking Water
SW – Solid Waste
SO – Soil/Solid
SL – Sludge
GW – Ground Water
WW – Waste Water
OL – Oil
SU – Surface Water

PRESERVATIVE CODES:
NI – Nitric acid (HNO_3)
HA – Hydrochloric Acid (HCl)
SH – Sodium Hydroxide (NaOH)
ST – Sodium Thiosulfate
ZN – Zinc acetate
SA – Sulfuric Acid (H_2SO_4)
4C – 4°C
AA – Ascorbic Acid
NO – No preservative
SS – Sodium sulfite

CONDITIONS UPON RECEIPT (CHECK ONE)
☐ Iced wet/Blue ____ °C Temp
☐ Ambient ____ °C Temp ☐ N/A

	YES	NO	N/A
Custody seals present/intact?	☐	☐	☐
Broken containers?	☐	☐	☐
COC agree with sample Labels?	☐	☐	☐
Correct containers for testing?	☐	☐	☐
Headspace issues acceptable?	☐	☐	☐
Holding time(s) acceptable?	☐	☐	☐
Preservative pH's acceptable?	☐	☐	☐
Was pH left unadjusted?	☐	☐	☐
All samples listed on COC received?	☐	☐	☐
Samples properly preserved?	☐	☐	☐
Client's sample documents received?	☐	☐	☐
COC been relinquished?	☐	☐	☐
Are tests listed for each sample?	☐	☐	☐

Method of Shipment (check one): US Postal ☐ UPS ☐ FedEx ☐ MMLI ☐ Client ☐
Date Shipped:
Airbill#:
Logged in by: Location:
LAB NOTES:
Follow up action required: YES ☐ NO ☐
Client informed on:
Client Rep:
By:
Reviewed by:
Date:

SAMPLE CATEGORY = TC

KENTUCKY DIVISION OF WATER / DRINKING WATER BRANCH
BACTERIOLOGICAL ANALYSIS REPORT FORM

General Information – This Section To Be Completed By Collector

PWS ID: KY0180547

Compliance Period (MMYYYY): 092009

PWS Name: CRWD #1

PWS Contact: Bill

Collection Date (MMDDYYYY): 09/16/2009
(All Samples Reported on this Form were Collected on this Date.)

PWS Address: 69 Marguerite New Concord Ky 42076

PWS Phone: 270-436-6304

Collector Name: William Duncan 9-16-09
Signature/Date

General Information – This Section To Be Completed By Lab

Lab ID: 00031

Lab Receipt Date (MMDDYYYY): 09162009

Total Coliform Analysis Method Code: 328

Analysis Date (MMDDYYYY): 09162009

E Coli Analysis Method Code:

Lab Analyst: Mindy Martin 9/17/09
Signature/Date

Lab Supervisor: 9/17/09
Signature/Date

Sample Information – This Section To Be Completed By Collector

Sample Type (RT, RP, or SP) (See Key)	Special Sample Reason (A, B, C, D, or E) (See Key)	Replacement Sample? (Y or Blank)	Location Code (See Instructions)	Repeat Location Code (DN, UP, or OR) (See Key)	Sample Time (24 hr)	Free Chlorine (Required for all disinfectants except Chloramine)	Total Chlorine (Required when disinfectant is Chloramine)
RT			003		0806	1.10	1.17
						.	.
						.	.
						.	.
						.	.
						.	.
						.	.
						.	.
						.	.
						.	.

Analysis Information – This Section To Be Completed By Lab

Lab Sample Number	Analysis Time (24 hr)	Result (Total Coliform Count - or - TNTC - or - CNFG) (See Key)	Total Coliform (P/A)	E Coli (P/A)	Lab Sample Number of Original Sample (Required for Repeat and/or Replacement Samples) (See Instructions)
AG97074	1400		A		

The signatories of this form certify by their signatures that collection and analysis of the water sample analyzed and the resulting data hereby submitted, were completed in accordance with the provisions of 401 KAR Chapter 8, specifically including but not limited to 401 KAR 8:200, Section 1 and 401 KAR 8:040; and that the data submitted on this form is a true and accurate report of the results of collection and analysis performed pursuant to the above-referenced regulations. Violations of 401 KAR Chapter 8 are subject to severe penalties prescribed in KRS 224.99-010, up to $25,000 fine per day per violation and in some cases a violation may subject the violator to prison.

BACTERIOLOGICAL ANALYSIS REPORT FROM KEY

Sample Type:	RT = Routine (For Compliance)	RP = Repeat (For Compliance)	SP = Special (Not for Compliance)
Special Sample Reason: (Only If Sample Type = SP)	A = Suspected Contamination B = New Plant, Modification, or Line Extension	C = Treatment Modification D = Study/Investigation	E = Line Break, Emergency Repair
Repeat Location Code: (Only If Sample Type = RP)	DN = Downstream	UP = Upstream	OR = Original Site

McCoy & McCoy Laboratories, Inc.
www.mccoylabs.com

PO Box 907 * 825 Industrial Rd.
Madisonville, KY 42431
270.821.7375
270.825.9200 fax

2456 Fortune Dr., Suite 160
Lexington, KY 40509
859.299.7775
859.299.7785 fax

173 Island Creek Rd.
Pikeville, KY 41501
606.432.3104
606.432.3171 fax

1800 Kentucky Ave.
Paducah, KY 42003
270.444.6547
270.444.6572 fax

5510 Fern Valley Rd.
Suite 104 Promenade Pavilion
Louisville, KY 40228
502.961.0001

CHAIN OF CUSTODY and ANALYTICAL REQUEST

Please print legibly.

SHADED AREA FOR LAB USE ONLY

Client: CRWD #1	Bill To:	Send Results to:	Compliance Monitoring (check one)? Yes ☐ No ☐ Samples Chlorinated (check one)? Yes ☐ No ☐	PO#
Phone/Email:	Phone/Email	Phone/Email:	PWS ID# / STATE	
Batch#:	Project Name	Collected by (Signature): Bill	MMLI Quote # (if applicable)	

Sample ID#	COLLECTION DATE	TIME (24 hr)	SAMPLE DESCRIPTION Composite samples indicate begin time, end time and temp (°C) at end time	SAMPLE ANALYSIS REQUESTED Method ID if known (i.e. 8260B, 6010B/7470A...)	SAMPLE REMARKS (i.e. composite, grab, field readings, corrosive...)	Field Data pH S.U.	Field Data Temp °C	# OF CONTAINERS	MATRIX CODE (See Lower Left)	PRESERVATIVE CODE (See Lower Left)
	9-16-09	0800	003	RT						

1. Expedited services not available for all services, please call. 2. Samples received unannounced with less than 48 hours holding time remaining may be subject to additional surcharges. 3. Lab reserves the right to return unused portions of samples to client.

Relinquished by: (Signature)	Received By: (Signature)	DATE	TIME (24 hr)
William Duncan	David [illegible]	9-16-09	0900
Relinquished by: (Signature)	Received by: (Signature)	DATE	TIME (24 hr)
Relinquished by: (Signature)	Received for MMLI by:	DATE	TIME (24 hr)

CONDITIONS UPON RECEIPT (CHECK ONE)
☐ Iced wet/Blue °C Temp
☐ Ambient °C Temp ☐ N/A

	YES	NO	N/A
Custody seals present/intact?	☐	☐	☐
Broken containers?	☐	☐	☐
COC agree with sample Labels?	☐	☐	☐
Correct containers for testing?	☐	☐	☐
Headspace issues acceptable?	☐	☐	☐
Holding time(s) acceptable?	☐	☐	☐
Preservative pH's acceptable?	☐	☐	☐
Was pH left unadjusted?	☐	☐	☐
All samples listed on COC received?	☐	☐	☐
Samples properly preserved?	☐	☐	☐
Client's sample documents received?	☐	☐	☐
COC been relinquished?	☐	☐	☐
Are tests listed for each sample?	☐	☐	☐

Method of Shipment (check one): UPS ☐ FedEx ☐ MMLI ☐ US Postal ☐ Client ☐
Date Shipped:
Airbill#:
Logged in by: Location:
LAB NOTES
Follow up action required: YES ☐ NO ☐
Client informed on:
Client Rep:
By:
Reviewed by:
Date:

MATRIX CODES:
DW – Drinking Water
SW – Solid Waste
SO – Soil/Solid
SL – Sludge
GW – Ground Water
WW – Waste Water
OL – Oil
SU – Surface Water

PRESERVATIVE CODES:
NI – Nitric acid (HNO_3)
HA – Hydrochloric Acid (HCl)
SH – Sodium Hydroxide (NaOH)
ST – Sodium Thiosulfate
ZN – Zinc acetate
SA – Sulfuric Acid (H_2SO_4)
4C – 4°C
AA – Ascorbic Acid
NO – No preservative
SS – Sodium sulfite

McCoy & McCoy Laboratories, Inc.
P. O. Box 907
Madisonville, KY 42431
www.mccoylabs.com

Chain of Custody

Lexington KY 859-299-7775
Paducah KY 270-444-6547
Louisville KY 502-961-0001
Madisonville KY 270-821-7375
Pikeville KY 606-432-3104

Route: 54 Project SDWA
Center Ridge Water System
Attn: William Duncan
69 Marguerite Blvd
Newconcord KY 42076

Collected by: Bill
Collection Date: 9-16-09
Collection Time: 0816
P. O. No:
PhoneFax: 270-436-6304

CE648410 Center Ridge WD #1 HAA/THM 0180549

Logbatch
Composite Sample Start Date Time
Sample Nos
Stop Date Time
Field Data By: Date Time Fecal Date Time
pH Meter#: pH: DO Meter#: DO:
Temp: Cl: Flow: Units: Matrix: Liquid

Collection Method	Test	Analysis Requested	Bottle Type and Preservative
G / C	$DW_501_1	Trihalomethanes (THM)	40 ml Clear Vial NA2S2O3 4 c
G / C	$DW_552_1	EPA 552 Haloacetic Acids	1 Liter Amber Glass NH4CL 4c/Ext Freezer
G / C	DW_EX552_1	Extraction SDWA HAA	1 Liter Amber Glass NH4CL 4c/Ext Freezer

Max Peters
006 RT 6 Box 265
1120

Relinquished by: William Duncan Date/Time: 9-16-09 0900
Received by: [signature] Date/Time: 9/16/09 / 1130
Relinquished by: Date/Time:
Received by: Date/Time:
Relinquished by: Date/Time:
Received by: Date/Time:

FUEL SERVICES

SAMPLE CATEGORY = TC

KENTUCKY DIVISION OF WATER / DRINKING WATER BRANCH
BACTERIOLOGICAL ANALYSIS REPORT FORM

General Information – This Section To Be Completed By Collector

PWS ID: KY0180509

PWS Name: CRWD # 2

PWS Contact: Bill

PWS Address: 69 Marguerite New Concord Ky 42076

PWS Phone: 270-436-6304

Compliance Period (MMYYYY): 092009

Collection Date (MMDDYYYY): 09162009
(All Samples Reported on this Form were Collected on this Date.)

Collector Name: William Duncan 9-16-09
Signature/Date

General Information – This Section To Be Completed By Lab

Lab ID: 00031

Lab Receipt Date (MMDDYYYY): 09162009

Analysis Date (MMDDYYYY): 09162009

Total Coliform Analysis Method Code: 328

E Coli Analysis Method Code:

Lab Analyst: Mindy Martin 9/17/09
Signature/Date

Lab Supervisor: [signature] 9/17/09
Signature/Date

Sample Information – This Section To Be Completed By Collector

Sample Type (RT, RP, or SP) (See Key)	Special Sample Reason (A, B, C, D, or E) (See Key)	Replacement Sample? (Y or Blank)	Location Code (See Instructions)	Repeat Location Code (DN, UP, or OR) (See Key)	Sample Time (24 hr)	Free Chlorine (Required for all disinfectants except Chloramine)	Total Chlorine (Required when disinfectant is Chloramine)
RT			003		0620	1.19	1.25
						.	.
						.	.
						.	.
						.	.
						.	.
						.	.
						.	.
						.	.
						.	.

Analysis Information – This Section To Be Completed By Lab

Lab Sample Number	Analysis Time (24 hr)	Result (Total Coliform Count - or - TNTC - or - CNFG) (See Key)	Total Coliform (P/A)	E Coli (P/A)	Lab Sample Number of Original Sample (Required for Repeat and/or Replacement Samples) (See Instructions)
AG97075	1400		A		

The signatories of this form certify by their signatures that collection and analysis of the water sample analyzed and the resulting data hereby submitted, were completed in accordance with the provisions of 401 KAR Chapter 8, specifically including but not limited to 401 KAR 8:200, Section 1 and 401 KAR 8:040; and that the data submitted on this form is a true and accurate report of the results of collection and analysis performed pursuant to the above-referenced regulations. Violations of 401 KAR Chapter 8 are subject to severe penalties prescribed in KRS 224.99-010, up to $25,000 fine per day per violation and in some cases a violation may subject the violator to prison.

BACTERIOLOGICAL ANALYSIS REPORT FROM KEY

Sample Type:	RT = Routine (For Compliance)	RP = Repeat (For Compliance)	SP = Special (Not for Compliance)
Special Sample Reason: (Only If Sample Type = SP)	A = Suspected Contamination B = New Plant, Modification, or Line Extension	C = Treatment Modification D = Study/Investigation	E = Line Break, Emergency Repair
Repeat Location Code: (Only If Sample Type = RP)	DN = Downstream	UP = Upstream	OR = Original Site

McCoy & McCoy Laboratories, Inc.
www.mccoylabs.com

PO Box 907 * 825 Industrial Rd.
Madisonville, KY 42431
270.821.7375
270.825.9200 fax

2456 Fortune Dr., Suite 160
Lexington, KY 40509
859.299.7775
859.299.7785 fax

173 Island Creek Rd.
Pikeville, KY 41501
606.432.3104
606.432.3171 fax

1800 Kentucky Ave.
Paducah, KY 42003
270.444.6547
270.444.6572 fax

5510 Fern Valley Rd.
Suite 104 Promenade Pavilion
Louisville, KY 40228
502.961.0001

SHADED AREA FOR LAB USE ONLY

CHAIN OF CUSTODY and ANALYTICAL REQUEST

Please print legibly.

Client:	Bill To:	Send Results to:	Compliance Monitoring (check one)? Yes ☐ No ☐	PO#
CRWD #2			Samples Chlorinated (check one)? Yes ☐ No ☐	
Phone/Email:	Phone/Email	Phone/Email:	PWS ID# / STATE	
Batch#	Project Name	Collected by (Signature): Bill	MMLI Quote # (if applicable)	

Sample ID#	COLLECTION DATE	COLLECTION TIME (24 hr)	SAMPLE DESCRIPTION Composite samples indicate begin time, end time and temp (°C) at end time	SAMPLE ANALYSIS REQUESTED Method ID if known (i.e. 8260B, 6010B/7470A...)	SAMPLE REMARKS (i.e. composite, grab, field readings, corrosive...)	Field Data pH S.U.	Field Data Temp °C	# OF CONTAINERS	MATRIX CODE (See Lower Left)	PRESERVATIVE CODE (See Lower Left)
	9-16-09	0620	003	RT						

1. Expedited services not available for all services, please call. 2. Samples received unannounced with less than 48 hours holding time remaining may be subject to additional surcharges. 3. Lab reserves the right to return unused portions of samples to client.

Relinquished by: (Signature)	Received By: (Signature)	DATE	TIME (24 hr)
William Duncan	Derek [signature]	9-16-09	0900
Derek [signature]		9/16/09	
	Received for MMLI by:		

MATRIX CODES:
DW – Drinking Water
SW – Solid Waste
SO – Soil/Solid
SL – Sludge
GW – Ground Water
WW – Waste Water
OL – Oil
SU – Surface Water

PRESERVATIVE CODES:
NI – Nitric acid (HNO_3)
HA – Hydrochloric Acid (HCl)
SH – Sodium Hydroxide (NaOH)
ST – Sodium Thiosulfate
ZN – Zinc acetate
SA – Sulfuric Acid (H_2SO_4)
4C – 4°C
AA – Ascorbic Acid
NO – No preservative
SS – Sodium sulfite

CONDITIONS UPON RECEIPT (CHECK ONE)
☐ Iced wet/Blue ____ °C Temp
☐ Ambient ____ °C Temp ☐ N/A

	YES	NO	N/A
Custody seals present/intact?	☐	☐	☐
Broken containers?	☐	☐	☐
COC agree with sample Labels?	☐	☐	☐
Correct containers for testing?	☐	☐	☐
Headspace issues acceptable?	☐	☐	☐
Holding time(s) acceptable?	☐	☐	☐
Preservative pH's acceptable?	☐	☐	☐
Was pH left unadjusted?	☐	☐	☐
All samples listed on COC received?	☐	☐	☐
Samples properly preserved?	☐	☐	☐
Client's sample documents received?	☐	☐	☐
COC been relinquished?	☐	☐	☐
Are tests listed for each sample?	☐	☐	☐

Method of Shipment (check one): US Postal ☐ UPS ☐ FedEx ☐ MMLI ☐ Client ☐
Date Shipped:
Airbill#:
Logged in by: Location:
LAB NOTES:
Follow up action required: YES ☐ NO ☐
Client informed on: / /
Client Rep:
By:
Reviewed by:
Date: / /

McCoy & McCoy Laboratories, Inc.
P. O. Box 807
Madisonville, KY 42431
www.mccoylabs.com

Chain of Custody

Lexington KY 859-299-7775
Madisonville KY 270-821-7375
Paducah KY 270-444-6547
Pikeville KY 606-432-3104
Louisville KY 502-961-0001

Route: 54 Project SDWA

Collected by: RW

Collection Date: 9-16-09

Center Ridge Water Dist #2
Attn: William Duncan
69 Marguerite Blvd
Newconcord KY 42076

Collection Time:

P. O. No:

PhoneFax: 270-436-6304

CE648509 Center Ridge WD #2 Lead/Copper 0180509

Logbatch

Composite Sample Start Date Time

Sample Nos

Stop Date Time

Field Data By: Date Time Fecal Date Time

pH Meter#: pH: DO Meter#: DO:

Temp: Cl: Flow: Units: Matrix: Liquid

Collection Method	Test	Analysis Requested	Bottle Type and Preservative
G / C	DW_METPU_1	Drinking Water Metals Pick Up from Lo	
G / C	DW_CUICPMS_1	Copper by ICP/MS	250 ml Plastic Nitric Acid 4 c
G / C	DW_PBICPMS_1	Lead by ICP/MS	250 ml Plastic Nitric Acid 4 c

5 - Samples

001 0640
003 0700
005 0710
009 0720
013 0650

Relinquished by: William Duncan Date/Time: 9-16-09 0900
Received by: Date/Time: 9/16/09 1130
Relinquished by: Date/Time:
Received by: Date/Time:
Relinquished by: Date/Time:
Received by: Date/Time:

FUEL SERVICES

McCoy & McCoy Laboratories, Inc.
P. O. Box 907
Madisonville, KY 42431
www.mccoylabs.com

Chain of Custody

Lexington KY 859-299-7775
Paducah KY 270-444-6547
Louisville KY 502-961-0001
Madisonville KY 270-821-7375
Pikeville KY 606-432-3104

Route: 54 Project SDWA
Center Ridge Water Dist #2
Attn: William Duncan
69 Marguerite Blvd
Newconcord KY 42076

Collected by: Bill
Collection Date: 9-16-09
Collection Time: 0630
P. O. No:
PhoneFax: 270-436-6304

CE648511 Center Ridge WD #2 HAA/THM 0180509

Logbatch
Composite Sample Start Date Time
Sample Nos
Stop Date Time
Field Data By: Date Time Fecal Date Time
pH Meter#: pH: DO Meter#: DO:
Temp: Cl: Flow: Units: Matrix: Liquid

Collection Method	Test	Analysis Requested	Bottle Type and Preservative
G / C	DW_EX552_1	Extraction SDWA HAA	1 Liter Amber Glass NH4CL 4c/Ext Freezer
G / C	$DW_501_1	Trihalomethanes (THM)	40 ml Clear Vial NA2S2O3 4 c
G / C	$DW_552_1	EPA 552 Haloacetic Acids	1 Liter Amber Glass NH4CL 4c/Ext Freezer

003-216 Lake Point Ln.

DOR

003 216 Lake Point Ln

003 Duncan DR

Relinquished by: William Duncan Date/Time: 9-16-09 0900
Received by: Derek [illegible] Date/Time: 9/16/09/1130
Relinquished by: Date/Time:
Received by: Date/Time:
Relinquished by: Date/Time:
Received by: Date/Time:

FUEL SERVICES

SAMPLE CATEGORY = TC

KENTUCKY DIVISION OF WATER / DRINKING WATER BRANCH
BACTERIOLOGICAL ANALYSIS REPORT FORM

General Information – This Section To Be Completed By Collector

PWS ID: KY0180509

PWS Name: CRWD # 3

PWS Contact: Bill

PWS Address: 69 Marguerite New Concord Ky 42076

PWS Phone: 270-436-6304

Compliance Period (MMYYYY): 092009

Collection Date (MMDDYYYY): 09162009
(All Samples Reported on this Form were Collected on this Date.)

Collector Name: William Duncan 9-16-09
Signature/Date

General Information – This Section To Be Completed By Lab

Lab ID: 00031

Lab Receipt Date (MMDDYYYY): 09162009

Analysis Date (MMDDYYYY): 09162009

Total Coliform Analysis Method Code: 328

E Coli Analysis Method Code:

Lab Analyst: Mindy Martin 9/17/09
Signature/Date

Lab Supervisor: [signature] 9/17/09
Signature/Date

Sample Information – This Section To Be Completed By Collector

Sample Type (RT, RP, or SP) (See Key)	Special Sample Reason (A, B, C, D, or E) (See Key)	Replacement Sample? (Y or Blank)	Location Code (See Instructions)	Repeat Location Code (DN, UP, or OR) (See Key)	Sample Time (24 hr)	Free Chlorine (Required for all disinfectants except Chloramine)	Total Chlorine (Required when disinfectant is Chloramine)
RT			003		0600	1.23	1.29
						.	.
						.	.
						.	.
						.	.
						.	.
						.	.
						.	.
						.	.
						.	.

Analysis Information – This Section To Be Completed By Lab

Lab Sample Number	Analysis Time (24 hr)	Result (Total Coliform Count - or - TNTC - or - CNFG) (See Key)	Total Coliform (P/A)	E Coli (P/A)	Lab Sample Number of Original Sample (Required for Repeat and/or Replacement Samples) (See Instructions)
AG97016	1400		A		

The signatories of this form certify by their signatures that collection and analysis of the water sample analyzed and the resulting data hereby submitted, were completed in accordance with the provisions of 401 KAR Chapter 8, specifically including but not limited to 401 KAR 8:200, Section 1 and 401 KAR 8:040; and that the data submitted on this form is a true and accurate report of the results of collection and analysis performed pursuant to the above-referenced regulations. Violations of 401 KAR Chapter 8 are subject to severe penalties prescribed in KRS 224.99-010, up to $25,000 fine per day per violation and in some cases a violation may subject the violator to prison.

BACTERIOLOGICAL ANALYSIS REPORT FROM KEY

Sample Type:	RT = Routine (For Compliance)	RP = Repeat (For Compliance)	SP = Special (Not for Compliance)
Special Sample Reason: (Only if Sample Type = SP)	A = Suspected Contamination B = New Plant, Modification, or Line Extension	C = Treatment Modification D = Study/Investigation	E = Line Break, Emergency Repair
Repeat Location Code: (Only if Sample Type = RP)	DN = Downstream	UP = Upstream	OR = Original Site

McCoy & McCoy Laboratories, Inc.
www.mccoylabs.com

PO Box 907 * 825 Industrial Rd.
Madisonville, KY 42431
270.821.7375
270.825.9200 fax

2456 Fortune Dr., Suite 160
Lexington, KY 40509
859.299.7775
859.299.7785 fax

173 Island Creek Rd.
Pikeville, KY 41501
606.432.3104
606.432.3171 fax

1800 Kentucky Ave.
Paducah, KY 42003
270.444.6547
270.444.6572 fax

5510 Fern Valley Rd.
Suite 104 Promenade Pavilion
Louisville, KY 40228
502.961.0001

CHAIN OF CUSTODY and ANALYTICAL REQUEST

Please print legibly.

SHADED AREA FOR LAB USE ONLY

Client: CRWD #3

Phone/Email:

Bill To:

Phone/Email

Send Results to:

Phone/Email:

Compliance Monitoring (check one)? Yes ☐ No ☐

Samples Chlorinated (check one)? Yes ☐ No ☐

PO#

PWS ID#

STATE

MMLI Quote # (if applicable)

Batch#

Project Name

Collected by (Signature): RW

Sample ID#	COLLECTION DATE	COLLECTION TIME (24 hr)	SAMPLE DESCRIPTION Composite samples indicate begin time, end time and temp (°C) at end time	SAMPLE ANALYSIS REQUESTED Method ID if known (i.e. 8260B, 6010B/7470A...)	SAMPLE REMARKS (i.e. composite, grab, field readings, corrosive...)	Field Data pH S.U.	Field Data Temp °C	# OF CONTAINERS	MATRIX CODE (See Lower Left)	PRESERVATIVE CODE (See Lower Left)
	9-16-09	0600	003	RT						

1. Expedited services not available for all services, please call. 2. Samples received unannounced with less than 48 hours holding time remaining may be subject to additional surcharges. 3. Lab reserves the right to return unused portions of samples to client.

Relinquished by: (Signature)	Received By: (Signature)	DATE	TIME (24 hr)
William Duncan	[signature]	9-16-09	0900
Relinquished by: (Signature)	Received by: (Signature)	DATE	TIME (24 hr)
Relinquished by: (Signature)	Received for MMLI by:	DATE	TIME (24 hr)

CONDITIONS UPON RECEIPT (CHECK ONE)

☐ Iced wet/Blue °C Temp
☐ Ambient °C Temp ☐ N/A

	YES	NO	N/A
Custody seals present/intact?	☐	☐	☐
Broken containers?	☐	☐	☐
COC agree with sample Labels?	☐	☐	☐
Correct containers for testing?	☐	☐	☐
Headspace issues acceptable?	☐	☐	☐
Holding time(s) acceptable?	☐	☐	☐
Preservative pH's acceptable?	☐	☐	☐
Was pH left unadjusted?	☐	☐	☐
All samples listed on COC received?	☐	☐	☐
Samples properly preserved?	☐	☐	☐
Client's sample documents received?	☐	☐	☐
COC been relinquished?	☐	☐	☐
Are tests listed for each sample?	☐	☐	☐

Method of Shipment (check one): UPS ☐ FedEx ☐ MMLI ☐ Client ☐ US Postal ☐

Date Shipped:
Airbill#:

Logged in by: Location:

LAB NOTES

Follow up action required: YES ☐ NO ☐

Client informed on: / /

Client Rep:

By:

Reviewed by:

Date: / /

MATRIX CODES:

DW – Drinking Water
SW – Solid Waste
SO – Soil/Solid
SL – Sludge
GW – Ground Water
WW – Waste Water
OL – Oil
SU – Surface Water

PRESERVATIVE CODES:

NI – Nitric acid (HNO_3)
HA – Hydrochloric Acid (HCl)
SH – Sodium Hydroxide (NaOH)
ST – Sodium Thiosulfate
ZN – Zinc acetate
SA – Sulfuric Acid (H_2SO_4)
4C – 4°C
AA – Ascorbic Acid
NO – No preservative
SS – Sodium sulfite

McCoy & McCoy Laboratories, Inc.
P. O. Box 907
Madisonville, KY 42431
www.mccoylabs.com

Chain of Custody

Lexington KY 859-299-7775
Madisonville KY 270-821-7375
Paducah KY 270-444-6547
Pikeville KY 606-432-3104
Louisville KY 502-961-0001

Route: 54 Project SDWA
Center Ridge Water Dist #3
Attn: William Duncan
69 Marguerite Blvd
Newconcord KY 42076

Collected by: Bill
P. O. No:
Collection Date: 9-16-09
Collection Time: 0610
PhoneFax: 270-436-6304

CE648609 Center Ridge WD #3 HAA/THM 0180502

Logbatch
Composite Sample Start Date Time
Sample Nos
Stop Date Time

Field Data By: Date Time Fecal Date Time
pH Meter#: pH: DO Meter#: DO:
Temp: Cl: Flow: Units: Matrix: Liquid

Collection Method	Test	Analysis Requested	Bottle Type and Preservative
G / C	$DW_501_1	Trihalomethanes (THM)	40 ml Clear Vial NA2S2O3 4 c
G / C	DW_EX552_1	Extraction SDWA HAA	1 Liter Amber Glass NH4CL 4c/Ext Freezer
G / C	$DW_552_1	EPA 552 Haloacetic Acids	1 Liter Amber Glass NH4CL 4c/Ext Freezer

MR

Relinquished by: William Duncan Date/Time: 9-16-09 0900
Received by: Dack [illegible] Date/Time: 9/16/09 / 1130
Relinquished by: Date/Time:
Received by: Date/Time:
Relinquished by: Date/Time:
Received by: Date/Time:

FUEL SERVICES

SAMPLE CATEGORY = TC

KENTUCKY DIVISION OF WATER / DRINKING WATER BRANCH
BACTERIOLOGICAL ANALYSIS REPORT FORM

General Information – This Section To Be Completed By Collector

PWS ID: KY0183106

PWS Name: CRWD # 4

PWS Address: 69 Marguerite New Concord Ky 42076

PWS Contact: Bill

PWS Phone: 270-436-6304

Compliance Period (MMYYYY): 092009

Collection Date (MMDDYYYY): 09162009 (All Samples Reported on this Form were Collected on this Date.)

Collector Name: William Duncan 9-16-09 (Signature/Date)

General Information – This Section To Be Completed By Lab

Lab ID: 00031

Lab Receipt Date (MMDDYYYY): 09162009

Analysis Date (MMDDYYYY): 09162009

Total Coliform Analysis Method Code: 328

E Coli Analysis Method Code:

Lab Supervisor: [signature] 9/17/09 (Signature/Date)

Lab Analyst: Mindy Martin 9/17/09 (Signature/Date)

Sample Information – This Section To Be Completed By Collector

Sample Type (RT, RP, or SP) (See Key)	Special Sample Reason (A, B, C, D, or E) (See Key)	Replacement Sample? (Y or Blank)	Location Code (See Instructions)	Repeat Location Code (DN, UP, or OR) (See Key)	Sample Time (24 hr)	Free Chlorine (Required for all disinfectants except Chloramine)	Total Chlorine (Required when disinfectant is Chloramine)
RT			013		0830	1.15	1.21

Analysis Information – This Section To Be Completed By Lab

Lab Sample Number	Analysis Time (24 hr)	Result (Total Coliform Count - or - TNTC - or - CNFG) (See Key)	Total Coliform (P/A)	E Coli (P/A)	Lab Sample Number of Original Sample (Required for Repeat and/or Replacement Samples) (See Instructions)
A597077	1400		A		

The signatories of this form certify by their signatures that collection and analysis of the water sample analyzed and the resulting data hereby submitted, were completed in accordance with the provisions of 401 KAR Chapter 8, specifically including but not limited to 401 KAR 8:200, Section 1 and 401 KAR 8:040; and the data submitted on this form is a true and accurate report of the results collection and analysis performed pursuant to the above-referenced sig... Violations of 401 KAR Chapter 8 are subject to severe penalties prescr... 224.99-010, up to $25,000 fine per day per violation and in some ca... may subject the violator to prison.

BACTERIOLOGICAL ANALYSIS REPORT FROM KEY

...ype:	RT = Routine (For Compliance)	RP = Repeat (For Compliance)	SP = Special (Not for Compliance)
...l Sample Reason: (...ly if Sample Type = SP)	A = Suspected Contamination B = New Plant, Modification, or Line Extension	C = Treatment Modification D = Study/Investigation	E = Line Break, Emergency Repair
Repeat Location Code:	DN = Downstream	UP = Upstream	OR = Original Site

McCoy & McCoy Laboratories, Inc.
www.mccoylabs.com

PO Box 907 * 825 Industrial Rd.
Madisonville, KY 42431
270.821.7375
270.825.9200 fax

2456 Fortune Dr., Suite 160
Lexington, KY 40509
859.299.7775
859.299.7785 fax

173 Island Creek Rd.
Pikeville, KY 41501
606.432.3104
606.432.3171 fax

1800 Kentucky Ave.
Paducah, KY 42003
270.444.6547
270.444.6572 fax

5510 Fern Valley Rd.
Suite 104 Promenade Pavilion
Louisville, KY 40228
502.961.0001

CHAIN OF CUSTODY and ANALYTICAL REQUEST

Please print legibly.

SHADED AREA FOR LAB USE ONLY

Client:	Bill To:	Send Results to:	Compliance Monitoring (check one)? Yes ☐ No ☐ Samples Chlorinated (check one)? Yes ☐ No ☐	PO#
CKWD#4				
Phone/Email:	Phone/Email	Phone/Email:	PWS ID# / STATE	
Batch#	Project Name	Collected by (Signature): Bill	MMLI Quote # (if applicable)	

Sample ID#	COLLECTION DATE	COLLECTION TIME (24 hr)	SAMPLE DESCRIPTION Composite samples indicate begin time, end time and temp (°C) at end time	SAMPLE ANALYSIS REQUESTED Method ID if known (i.e. 8260B, 6010B/7470A...)	SAMPLE REMARKS (i.e. composite, grab, field readings, corrosive...)	Field Data pH S.U.	Field Data Temp °C	# OF CONTAINERS	MATRIX CODE (See Lower Left)	PRESERVATIVE CODE (See Lower Left)
	9-16-09	0830	013	RT						

1. Expedited services not available for all services, please call. 2. Samples received unannounced with less than 48 hours holding time remaining may be subject to additional surcharges. 3. Lab reserves the right to return unused portions of samples to client.

Relinquished by: (Signature)	Received By: (Signature)	DATE	TIME (24 hr)
William Duncan	Derek [illegible]	9-16-09	0900
Relinquished by: (Signature)	Received by: (Signature)	DATE	TIME (24 hr)
Relinquished by: (Signature)	Received for MMLI by:	DATE	TIME (24 hr)

CONDITIONS UPON RECEIPT (CHECK ONE)
☐ Iced wet/Blue ____ °C Temp
☐ Ambient ____ °C Temp ☐ N/A

	YES	NO	N/A
Custody seals present/intact?	☐	☐	☐
Broken containers?	☐	☐	☐
COC agree with sample Labels?	☐	☐	☐
Correct containers for testing?	☐	☐	☐
Headspace issues acceptable?	☐	☐	☐
Holding time(s) acceptable?	☐	☐	☐
Preservative pH's acceptable?	☐	☐	☐
Was pH left unadjusted?	☐	☐	☐
All samples listed on COC received?	☐	☐	☐
Samples properly preserved?	☐	☐	☐
Client's sample documents received?	☐	☐	☐
COC been relinquished?	☐	☐	☐
Are tests listed for each sample?	☐	☐	☐

Method of Shipment (check one): US Postal ☐ UPS ☐ FedEx ☐ MMLI ☐ Client ☐
Date Shipped:
Airbill#:
Logged in by: Location:
LAB NOTES:
Follow up action required: YES ☐ NO ☐
Client informed on: / /
Client Rep:
By:
Reviewed by:
Date: / /

MATRIX CODES:
DW – Drinking Water
SW – Solid Waste
SO – Soil/Solid
SL – Sludge
GW – Ground Water
WW – Waste Water
OL – Oil
SU – Surface Water

PRESERVATIVE CODES:
NI – Nitric acid (HNO_3)
HA – Hydrochloric Acid (HCl)
SH – Sodium Hydroxide (NaOH)
ST – Sodium Thiosulfate
ZN – Zinc acetate
SA – Sulfuric Acid (H_2SO_4)
4C – 4°C
AA – Ascorbic Acid
NO – No preservative
SS – Sodium sulfite

SAMPLE CATEGORY = TC

KENTUCKY DIVISION OF WATER / DRINKING WATER BRANCH
BACTERIOLOGICAL ANALYSIS REPORT FORM

General Information – This Section To Be Completed By Collector

PWS ID: KY0180549

Compliance Period (MMYYYY): 092009

PWS Name: CRWD # 1

PWS Contact: Bill

Collection Date (MMDDYYYY): 09232009
(All Samples Reported on this Form were Collected on this Date.)

PWS Address: 69 Marguerite Ave Concord Ky 42076

PWS Phone: 270-436-6304

Collector Name: William Duncan 9-23-09
Signature/Date

General Information – This Section To Be Completed By Lab

Lab ID: 00001

Lab Receipt Date (MMDDYYYY): 09232009

Total Coliform Analysis Method Code: 090

Analysis Date (MMDDYYYY): 09232009

E Coli Analysis Method Code:

Lab Analyst: Mindy Martin 9/24/09
Signature/Date

Lab Supervisor: 9/24/09
Signature/Date

Sample Information – This Section To Be Completed By Collector / Analysis Information – This Section To Be Completed By Lab

Sample Type (RT, RP, or SP) (See Key)	Special Sample Reason (A, B, C, D, or E) (See Key)	Replacement Sample? (Y or Blank)	Location Code (See Instructions)	Repeat Location Code (DN, UP, or OR) (See Key)	Sample Time (24 hr)	Free Chlorine (Required for all disinfectants except Chloramine)	Total Chlorine (Required when disinfectant is Chloramine)	Lab Sample Number	Analysis Time (24 hr)	Result (Total Coliform Count - or - TNTC - or - CNFG) (See Key)	Total Coliform (P/A)	E Coli (P/A)	Lab Sample Number of Original Sample (Required for Repeat and/or Replacement Samples) (See Instructions)
RT			004		0730	1.24	1.29	AG98749	1505		A		
						.	.						
						.	.						
						.	.						
						.	.						
						.	.						
						.	.						
						.	.						
						.	.						
						.	.						

The signatories of this form certify by their signatures that collection and analysis of the water sample analyzed and the resulting data hereby submitted, were completed in accordance with the provisions of 401 KAR Chapter 8, specifically including but not limited to 401 KAR 8:200, Section 1 and 401 KAR 8:040; and that the data submitted on this form is a true and accurate report of the results of collection and analysis performed pursuant to the above-referenced regulations. Violations of 401 KAR Chapter 8 are subject to severe penalties prescribed in KRS 224.99-010, up to $25,000 fine per day per violation and in some cases a violation may subject the violator to prison.

BACTERIOLOGICAL ANALYSIS REPORT FROM KEY

Sample Type:	RT = Routine (For Compliance)	RP = Repeat (For Compliance)	SP = Special (Not for Compliance)
Special Sample Reason: (Only if Sample Type = SP)	A = Suspected Contamination B = New Plant, Modification, or Line Extension	C = Treatment Modification D = Study/Investigation	E = Line Break, Emergency Repair
Repeat Location Code: (Only if Sample Type = RP)	DN = Downstream	UP = Upstream	OR = Original Site

McCoy & McCoy Laboratories, Inc.
www.mccoylabs.com

PO Box 907 * 825 Industrial Rd.
Madisonville, KY 42431
270.821.7375
270.825.9200 fax

2456 Fortune Dr., Suite 160
Lexington, KY 40509
859.299.7775
859.299.7785 fax

173 Island Creek Rd.
Pikeville, KY 41501
606.432.3104
606.432.3171 fax

1800 Kentucky Ave.
Paducah, KY 42003
270.444.6547
270.444.6572 fax

5510 Fern Valley Rd.
Suite 104 Promenade Pavilion
Louisville, KY 40228
502.961.0001

CHAIN OF CUSTODY and ANALYTICAL REQUEST

Please print legibly

SHADED AREA FOR LAB USE ONLY

Client: CRWD #1

Phone/Email:

Bill To:

Phone/Email

Send Results to:

Phone/Email:

Compliance Monitoring (check one)? Yes ☐ No ☐

Samples Chlorinated (check one)? Yes ☐ No ☐

PO#

PWS ID#

STATE

Batch#

Project Name

Collected by (Signature): BW

MMLI Quote # (if applicable)

Sample ID#	COLLECTION DATE	COLLECTION TIME (24 hr)	SAMPLE DESCRIPTION Composite samples indicate begin time, end time and temp (°C) at end time	SAMPLE ANALYSIS REQUESTED Method ID if known (i.e. 8260B, 6010B/7470A...)	SAMPLE REMARKS (i.e. composite, grab, field readings, corrosive...)	Field Data pH S.U.	Field Data Temp °C	# OF CONTAINERS	MATRIX CODE (See Lower Left)	PRESERVATIVE CODE (See Lower Left)
	9-23-09	0730	004	RT						

1. Expedited services not available for all services, please call. 2. Samples received unannounced with less than 48 hours holding time remaining may be subject to additional surcharges. 3. Lab reserves the right to return unused portions of samples to client.

Relinquished by: (Signature)	Received By: (Signature)	DATE	TIME (24 hr)
William Duncan	[signature]	9-23-09	0900
Relinquished by: (Signature)	Received by: (Signature)	DATE	TIME (24 hr)
Relinquished by: (Signature)	Received for MMLI by:	DATE	TIME (24 hr)

CONDITIONS UPON RECEIPT (CHECK ONE)

☐ Iced wet/Blue ____ °C Temp
☐ Ambient ____ °C Temp ☐ N/A

	YES	NO	N/A
Custody seals present/intact?	☐	☐	☐
Broken containers?	☐	☐	☐
COC agree with sample Labels?	☐	☐	☐
Correct containers for testing?	☐	☐	☐
Headspace issues acceptable?	☐	☐	☐
Holding time(s) acceptable?	☐	☐	☐
Preservative pH's acceptable?	☐	☐	☐
Was pH left unadjusted?	☐	☐	☐
All samples listed on COC received?	☐	☐	☐
Samples properly preserved?	☐	☐	☐
Client's sample documents received?	☐	☐	☐
COC been relinquished?	☐	☐	☐
Are tests listed for each sample?	☐	☐	☐

Method of Shipment (check one): UPS ☐ FedEx ☐ MMLI ☐ US Postal ☐ Client ☐

Date Shipped:
Airbill#:
Logged in by: Location:
LAB NOTES:
Follow up action required: YES ☐ NO ☐
Client informed on:
Client Rep:
By:
Reviewed by:
Date:

MATRIX CODES:

DW – Drinking Water
SW – Solid Waste
SO – Soil/Solid
SL – Sludge
GW – Ground Water
WW – Waste Water
OL – Oil
SU – Surface Water

PRESERVATIVE CODES:

NI – Nitric acid (HNO_3)
HA – Hydrochloric Acid (HCl)
SH – Sodium Hydroxide (NaOH)
ST – Sodium Thiosulfate
ZN – Zinc acetate
SA – Sulfuric Acid (H_2SO_4)
4C – 4°C
AA – Ascorbic Acid
NO – No preservative
SS – Sodium sulfite

SAMPLE CATEGORY = TC

KENTUCKY DIVISION OF WATER / DRINKING WATER BRANCH
BACTERIOLOGICAL ANALYSIS REPORT FORM

General Information – This Section To Be Completed By Collector

PWS ID: KY0180507

Compliance Period (MMYYYY): 072009

PWS Name: CRWD # 2

PWS Contact: Bill

Collection Date (MMDDYYYY): 09232009
(All Samples Reported on this Form were Collected on this Date.)

PWS Address: 69 Marguerite Ave Concord Ky 42076

PWS Phone: 270-436-6304

Collector Name: William Duncan 9-23-09
Signature/Date

General Information – This Section To Be Completed By Lab

Lab ID: 00991

Lab Receipt Date (MMDDYYYY): 09292009

Total Coliform Analysis Method Code: 27

Analysis Date (MMDDYYYY): 09292009

E Coli Analysis Method Code:

Lab Analyst: Mindy Martin 9/24/09
Signature/Date

Lab Supervisor: 9/24/09
Signature/Date

Sample Information – This Section To Be Completed By Collector

Sample Type (RT, RP, or SP) (See Key)	Special Sample Reason (A, B, C, D, or E) (See Key)	Replacement Sample? (Y or Blank)	Location Code (See Instructions)	Repeat Location Code (DN, UP, or OR) (See Key)	Sample Time (24 hr)	Free Chlorine (Required for all disinfectants except Chloramine)	Total Chlorine (Required when disinfectant is Chloramine)
RT			004		0630	1.16	1.13
						.	.
						.	.
						.	.
						.	.
						.	.
						.	.
						.	.
						.	.
						.	.
						.	.

Analysis Information – This Section To Be Completed By Lab

Lab Sample Number	Analysis Time (24 hr)	Result (Total Coliform Count - or - TNTC - or - CNFG) (See Key)	Total Coliform (P/A)	E Coli (P/A)	Lab Sample Number of Original Sample (Required for Repeat and/or Replacement Samples) (See Instructions)
A6981501	1505		A		

The signatories of this form certify by their signatures that collection and analysis of the water sample analyzed and the resulting data hereby submitted, were completed in accordance with the provisions of 401 KAR Chapter 8, specifically including but not limited to 401 KAR 8:200, Section 1 and 401 KAR 8:040; and that the data submitted on this form is a true and accurate report of the results of collection and analysis performed pursuant to the above-referenced regulations. Violations of 401 KAR Chapter 8 are subject to severe penalties prescribed in KRS 224.99-010, up to $25,000 fine per day per violation and in some cases a violation may subject the violator to prison.

BACTERIOLOGICAL ANALYSIS REPORT FROM KEY

Sample Type:	RT = Routine (For Compliance)	RP = Repeat (For Compliance)	SP = Special (Not for Compliance)
Special Sample Reason: (Only if Sample Type = SP)	A = Suspected Contamination B = New Plant, Modification, or Line Extension	C = Treatment Modification D = Study/Investigation	E = Line Break, Emergency Repair
Repeat Location Code: (Only if Sample Type = RP)	DN = Downstream	UP = Upstream	OR = Original Site

McCoy & McCoy Laboratories, Inc.
www.mccoylabs.com

PO Box 907 * 825 Industrial Rd.
Madisonville, KY 42431
270.821.7375
270.825.9200 fax

2456 Fortune Dr., Suite 160
Lexington, KY 40509
859.299.7775
859.299.7785 fax

173 Island Creek Rd.
Pikeville, KY 41501
606.432.3104
606.432.3171 fax

1800 Kentucky Ave.
Paducah, KY 42003
270.444.6547
270.444.6572 fax

5510 Fern Valley Rd.
Suite 104 Promenade Pavilion
Louisville, KY 40228
502.961.0001

CHAIN OF CUSTODY and ANALYTICAL REQUEST

Please print legibly.

SHADED AREA FOR LAB USE ONLY

Client: CRWD #2	Bill To:	Send Results to:	Compliance Monitoring (check one)? Yes ☐ No ☐ Samples Chlorinated (check one)? Yes ☐ No ☐	PO#
Phone/Email:	Phone/Email	Phone/Email:	PWS ID# / STATE	
Batch#:	Project Name	Collected by (Signature): Bill	MMLI Quote # (if applicable)	

Sample ID#	COLLECTION DATE	COLLECTION TIME (24 hr)	SAMPLE DESCRIPTION Composite samples indicate begin time, end time and temp (°C) at end time	SAMPLE ANALYSIS REQUESTED Method ID if known (i.e. 8260B, 6010B/7470A...)	SAMPLE REMARKS (i.e. composite, grab, field readings, corrosive...)	Field Data pH S.U.	Field Data Temp °C	# OF CONTAINERS	MATRIX CODE (See Lower Left)	PRESERVATIVE CODE (See Lower Left)
	9-23-09	0630	004	RT						

1. Expedited services not available for all services, please call. 2. Samples received unannounced with less than 48 hours holding time remaining may be subject to additional surcharges. 3. Lab reserves the right to return unused portions of samples to client.

Relinquished by: (Signature)	Received By: (Signature)	DATE	TIME (24 hr)
William Duncan	[illegible]	9-23-09	0700
Relinquished by: (Signature)	Received by: (Signature)	DATE	TIME (24 hr)
Relinquished by: (Signature)	Received for MMLI by:	DATE	TIME (24 hr)

CONDITIONS UPON RECEIPT (CHECK ONE)
☐ Iced wet/Blue ____ °C Temp
☐ Ambient ____ °C Temp ☐ N/A

	YES	NO	N/A
Custody seals present/intact?	☐	☐	☐
Broken containers?	☐	☐	☐
COC agree with sample Labels?	☐	☐	☐
Correct containers for testing?	☐	☐	☐
Headspace issues acceptable?	☐	☐	☐
Holding time(s) acceptable?	☐	☐	☐
Preservative pH's acceptable?	☐	☐	☐
Was pH left unadjusted?	☐	☐	☐
All samples listed on COC received?	☐	☐	☐
Samples properly preserved?	☐	☐	☐
Client's sample documents received?	☐	☐	☐
COC been relinquished?	☐	☐	☐
Are tests listed for each sample?	☐	☐	☐

Method of Shipment (check one): US Postal ☐ UPS ☐ FedEx ☐ MMLI ☐ Client ☐
Date Shipped:
Airbill#:
Logged in by: Location:
LAB NOTES:
Follow up action required: YES ☐ NO ☐
Client informed on:
Client Rep:
By:
Reviewed by:
Date:

MATRIX CODES:
DW – Drinking Water
SW – Solid Waste
SO – Soil/Solid
SL – Sludge
GW – Ground Water
WW – Waste Water
OL – Oil
SU – Surface Water

PRESERVATIVE CODES:
NI – Nitric acid (HNO_3)
HA – Hydrochloric Acid (HCl)
SH – Sodium Hydroxide (NaOH)
ST – Sodium Thiosulfate
ZN – Zinc acetate
SA – Sulfuric Acid (H_2SO_4)
4C – 4°C
AA – Ascorbic Acid
NO – No preservative
SS – Sodium sulfite

SAMPLE CATEGORY = TC

KENTUCKY DIVISION OF WATER / DRINKING WATER BRANCH
BACTERIOLOGICAL ANALYSIS REPORT FORM

General Information – This Section To Be Completed By Collector

PWS ID: KY0180502

PWS Name: CRWD # 3

PWS Contact: Bill

PWS Address: 69 Marguerite New Concord Ky 42076

PWS Phone: 270-436-6304

Compliance Period (MMYYYY): 092009

Collection Date (MMDDYYYY): 09232009
(All Samples Reported on this Form were Collected on this Date.)

Collector Name: William Duncan 9-23-09
Signature/Date

General Information – This Section To Be Completed By Lab

Lab ID: 00007

Lab Receipt Date (MMDDYYYY): 09242009

Analysis Date (MMDDYYYY): 09242009

Total Coliform Analysis Method Code: 910

E Coli Analysis Method Code:

Lab Analyst: Mindy Martin 9/24/09
Signature/Date

Lab Supervisor: 9/24/09
Signature/Date

Sample Information – This Section To Be Completed By Collector / Analysis Information – This Section To Be Completed By Lab

Sample Type (RT, RP, or SP) (See Key)	Special Sample Reason (A, B, C, D, or E) (See Key)	Replacement Sample? (Y or Blank)	Location Code (See Instructions)	Repeat Location Code (DN, UP, or OR) (See Key)	Sample Time (24 hr)	Free Chlorine (Required for all disinfectants except Chloramine)	Total Chlorine (Required when disinfectant is Chloramine)	Lab Sample Number	Analysis Time (24 hr)	Result (Total Coliform Count - or - TNTC - or - CNFG) (See Key)	Total Coliform (P/A)	E Coli (P/A)	Lab Sample Number of Original Sample (Required for Repeat and/or Replacement Samples) (See Instructions)
RT			004		0600	1.08	1.19	AG98751	1505		A		

The signatories of this form certify by their signatures that collection and analysis of the water sample analyzed and the resulting data hereby submitted, were completed in accordance with the provisions of 401 KAR Chapter 8, specifically including but not limited to 401 KAR 8:200, Section 1 and 401 KAR 8:040; and that the data submitted on this form is a true and accurate report of the results of collection and analysis performed pursuant to the above-referenced regulations. Violations of 401 KAR Chapter 8 are subject to severe penalties prescribed in KRS 224.99-010, up to $25,000 fine per day per violation and in some cases a violation may subject the violator to prison.

BACTERIOLOGICAL ANALYSIS REPORT FROM KEY

Sample Type:	RT = Routine (For Compliance)	RP = Repeat (For Compliance)	SP = Special (Not for Compliance)
Special Sample Reason: (Only if Sample Type = SP)	A = Suspected Contamination B = New Plant, Modification, or Line Extension	C = Treatment Modification D = Study/Investigation	E = Line Break, Emergency Repair
Repeat Location Code: (Only if Sample Type = RP)	DN = Downstream	UP = Upstream	OR = Original Site

McCoy & McCoy Laboratories, Inc.
www.mccoylabs.com

PO Box 907 * 825 Industrial Rd.
Madisonville, KY 42431
270.821.7375
270.825.9200 fax

2456 Fortune Dr., Suite 160
Lexington, KY 40509
859.299.7775
859.299.7785 fax

173 Island Creek Rd.
Pikeville, KY 41501
606.432.3104
606.432.3171 fax

1800 Kentucky Ave.
Paducah, KY 42003
270.444.6547
270.444.6572 fax

5510 Fern Valley Rd.
Suite 104 Promenade Pavilion
Louisville, KY 40228
502.961.0001

CHAIN OF CUSTODY and ANALYTICAL REQUEST

Please print legibly.

SHADED AREA FOR LAB USE ONLY

Client: CRWD# 3

Phone/Email:

Bill To:

Phone/Email

Send Results to:

Phone/Email:

Compliance Monitoring (check one)? Yes ☐ No ☐

Samples Chlorinated (check one)? Yes ☐ No ☐

PO#

PWS ID#

STATE

Batch#

Project Name

Collected by (Signature): RCO

MMLI Quote # (if applicable)

Sample ID#	COLLECTION DATE	COLLECTION TIME (24 hr)	SAMPLE DESCRIPTION Composite samples indicate begin time, end time and temp (°C) at end time	SAMPLE ANALYSIS REQUESTED Method ID if known (i.e. 8260B, 6010B/7470A...)	SAMPLE REMARKS (i.e. composite, grab, field readings, corrosive...)	Field Data pH S.U.	Field Data Temp °C	# OF CONTAINERS	MATRIX CODE (See Lower Left)	PRESERVATIVE CODE (See Lower Left)
	9-23-09	0600	004	RT						

1. Expedited services not available for all services, please call. 2. Samples received unannounced with less than 48 hours holding time remaining may be subject to additional surcharges. 3. Lab reserves the right to return unused portions of samples to client.

Relinquished by: (Signature)	Received By: (Signature)	DATE	TIME (24 hr)
William Duncan	[signature]	9-23-09	0900
Relinquished by: (Signature)	Received by: (Signature)	DATE	TIME (24 hr)
Relinquished by: (Signature)	Received for MMLI by:	DATE	TIME (24 hr)

CONDITIONS UPON RECEIPT (CHECK ONE)
☐ Iced wet/Blue ____ °C Temp
☐ Ambient ____ °C Temp ☐ N/A

	YES	NO	N/A
Custody seals present/intact?	☐	☐	☐
Broken containers?	☐	☐	☐
COC agree with sample Labels?	☐	☐	☐
Correct containers for testing?	☐	☐	☐
Headspace issues acceptable?	☐	☐	☐
Holding time(s) acceptable?	☐	☐	☐
Preservative pH's acceptable?	☐	☐	☐
Was pH left unadjusted?	☐	☐	☐
All samples listed on COC received?	☐	☐	☐
Samples properly preserved?	☐	☐	☐
Client's sample documents received?	☐	☐	☐
COC been relinquished?	☐	☐	☐
Are tests listed for each sample?	☐	☐	☐

Method of Shipment (check one): UPS ☐ FedEx ☐ MMLI ☐ US Postal ☐ Client ☐

Date Shipped:
Airbill #:
Logged in by: Location:
LAB NOTES
Follow up action required: YES ☐ NO ☐
Client informed on:
Client Rep:
BY:
Reviewed by:
Date:

MATRIX CODES:
DW – Drinking Water
SW – Solid Waste
SO – Soil/Solid
SL – Sludge
GW – Ground Water
WW – Waste Water
OL – Oil
SU – Surface Water

PRESERVATIVE CODES:
NI – Nitric acid (HNO_3)
HA – Hydrochloric Acid (HCl)
SH – Sodium Hydroxide (NaOH)
ST – Sodium Thiosulfate
ZN – Zinc acetate
SA – Sulfuric Acid (H_2SO_4)
4C – 4°C
AA – Ascorbic Acid
NO – No preservative
SS – Sodium sulfite

SAMPLE CATEGORY = TC

KENTUCKY DIVISION OF WATER / DRINKING WATER BRANCH
BACTERIOLOGICAL ANALYSIS REPORT FORM

General Information – This Section To Be Completed By Collector

PWS ID: KY0183106

Compliance Period (MMYYYY): 092009

PWS Name: CRWD # 4

PWS Contact: Bill

Collection Date (MMDDYYYY): 09232009
(All Samples Reported on this Form were Collected on this Date.)

PWS Address: 69 Marguerite New Concord Ky 42076

PWS Phone: 270-436-6304

Collector Name: William Duncan 9-23-09
Signature/Date

General Information – This Section To Be Completed By Lab

Lab ID: 00007

Lab Receipt Date (MMDDYYYY): 09232009

Total Coliform Analysis Method Code: 028

Analysis Date (MMDDYYYY): 09232009

E Coli Analysis Method Code:

Lab Analyst: Mindy Martin 9/24/09
Signature/Date

Lab Supervisor: [signature] 9/24/09
Signature/Date

Sample Information – This Section To Be Completed By Collector

Sample Type (RT, RP, or SP) (See Key)	Special Sample Reason (A, B, C, D, or E) (See Key)	Replacement Sample? (Y or Blank)	Location Code (See Instructions)	Repeat Location Code (DN, UP, or OR) (See Key)	Sample Time (24 hr)	Free Chlorine (Required for all disinfectants except Chloramine)	Total Chlorine (Required when disinfectant is Chloramine)
RT			014		0800	1.28	1.34
						.	.
						.	.
						.	.
						.	.
						.	.
						.	.
						.	.
						.	.
						.	.

Analysis Information – This Section To Be Completed By Lab

Lab Sample Number	Analysis Time (24 hr)	Result (Total Coliform Count - or - TNTC - or - CNFG) (See Key)	Total Coliform (P/A)	E Coli (P/A)	Lab Sample Number of Original Sample (Required for Repeat and/or Replacement Samples) (See Instructions)
AG98752	1505		A		

The signatories of this form certify by their signatures that collection and analysis of the water sample analyzed and the resulting data hereby submitted, were completed in accordance with the provisions of 401 KAR Chapter 8, specifically including but not limited to 401 KAR 8:200, Section 1 and 401 KAR 8:040; and that the data submitted on this form is a true and accurate report of the results of collection and analysis performed pursuant to the above-referenced regulations. Violations of 401 KAR Chapter 8 are subject to severe penalties prescribed in KRS 224.99-010, up to $25,000 fine per day per violation and in some cases a violation may subject the violator to prison.

BACTERIOLOGICAL ANALYSIS REPORT FROM KEY

Sample Type:	RT = Routine (For Compliance)	RP = Repeat (For Compliance)	SP = Special (Not for Compliance)
Special Sample Reason: (Only if Sample Type = SP)	A = Suspected Contamination B = New Plant, Modification, or Line Extension	C = Treatment Modification D = Study/Investigation	E = Line Break, Emergency Repair
Repeat Location Code:	DN = Downstream	UP = Upstream	OR = Original Site

McCoy & McCoy Laboratories, Inc.
www.mccoylabs.com

PO Box 907 * 825 Industrial Rd.
Madisonville, KY 42431
270.821.7375
270.825.9200 fax

2456 Fortune Dr., Suite 160
Lexington, KY 40509
859.299.7775
859.299.7785 fax

173 Island Creek Rd.
Pikeville, KY 41501
606.432.3104
606.432.3171 fax

1800 Kentucky Ave.
Paducah, KY 42003
270.444.6547
270.444.6572 fax

5510 Fern Valley Rd.
Suite 104 Promenade Pavilion
Louisville, KY 40228
502.961.0001

CHAIN OF CUSTODY and ANALYTICAL REQUEST

Please print legibly

SHADED AREA FOR LAB USE ONLY

Client:	Bill To:	Send Results to:	Compliance Monitoring (check one)? Yes ☐ No ☐ Samples Chlorinated (check one)? Yes ☐ No ☐	PO#
CRWD # 4				
Phone/Email:	Phone/Email	Phone/Email:	PWS ID# / STATE	
Batch#:	Project Name	Collected by (Signature): Bill	MMLI Quote # (if applicable)	

Sample ID#	COLLECTION DATE	COLLECTION TIME (24 hr)	SAMPLE DESCRIPTION Composite samples indicate begin time, end time and temp (°C) at end time	SAMPLE ANALYSIS REQUESTED Method ID if known (i.e. 8260B, 6010B/7470A...)	SAMPLE REMARKS (i.e. composite, grab, field readings, corrosive...)	Field Data pH S.U.	Field Data Temp °C	# OF CONTAINERS	MATRIX CODE (See Lower Left)	PRESERVATIVE CODE (See Lower Left)
	9-23-09	0800	014	RT						

1. Expedited services not available for all services, please call. 2. Samples received unannounced with less than 48 hours holding time remaining may be subject to additional surcharges. 3. Lab reserves the right to return unused portions of samples to client.

Relinquished by: (Signature)	Received By: (Signature)	DATE	TIME (24 hr)
William Duncan	Derek Pfost	9-23-09	0900
Relinquished by: (Signature)	Received by: (Signature)	DATE	TIME (24 hr)
Relinquished by: (Signature)	Received for MMLI by:	DATE	TIME (24 hr)

CONDITIONS UPON RECEIPT (CHECK ONE)
☐ Iced wet/Blue ____ °C Temp
☐ Ambient ____ °C Temp ☐ N/A

	YES	NO	N/A
Custody seals present/intact?	☐	☐	☐
Broken containers?	☐	☐	☐
COC agree with sample Labels?	☐	☐	☐
Correct containers for testing?	☐	☐	☐
Headspace issues acceptable?	☐	☐	☐
Holding time(s) acceptable?	☐	☐	☐
Preservative pH's acceptable?	☐	☐	☐
Was pH left unadjusted?	☐	☐	☐
All samples listed on COC received?	☐	☐	☐
Samples properly preserved?	☐	☐	☐
Client's sample documents received?	☐	☐	☐
COC been relinquished?	☐	☐	☐
Are tests listed for each sample?	☐	☐	☐

Method of Shipment (check one): UPS ☐ FedEx ☐ MMLI ☐ US Postal ☐ Client ☐
Date Shipped:
Airbill#:
Logged in by: Location:
LAB NOTES
Follow up action required: YES ☐ NO ☐
Client informed on:
Client Rep:
By:
Reviewed by:
Date:

MATRIX CODES:
DW – Drinking Water
SW – Solid Waste
SO – Soil/Solid
SL – Sludge
GW – Ground Water
WW – Waste Water
OL – Oil
SU – Surface Water

PRESERVATIVE CODES:
NI – Nitric acid (HNO_3)
HA – Hydrochloric Acid (HCl)
SH – Sodium Hydroxide (NaOH)
ST – Sodium Thiosulfate
ZN – Zinc acetate
SA – Sulfuric Acid (H_2SO_4)
4C – 4°C
AA – Ascorbic Acid
NO – No preservative
SS – Sodium sulfite

McCoy & McCoy Laboratories, Inc.
P. O. Box 907
Madisonville, KY 42431
www.mccoylabs.com

Lexington KY 859-299-7775
Madisonville KY 270-821-7375
Paducah KY 270-444-6547
Pikeville KY 606-432-3104
M.DeMoss@mccoylabs.com

Center Ridge Water Dist #2
Attn: William Duncan
69 Marguerite Blvd
Newconcord KY 42076

Reported: 09/24/09
Client: CE648509
Batch No: 09091509

These analytical results have not been submitted to the Kentucky Division of Water. The reports require signature/date from a representative of the PWS. Therefore these results have been submitted directly to the PWS for signature and subsequent submittal to the Kentucky Division of Water.

Result detected		MCL	Result	Units
1022	Copper	1.3	0.003	mg/l
1030	Lead	0.015	0.003	mg/l

SAMPLE CATEGORY = PB
DISTRIBUTION SAMPLING

KENTUCKY DIVISION OF WATER / DRINKING WATER BRANCH
LEAD AND COPPER ANALYSIS REPORT FORM

This Section To Be Completed By Collector

PWS ID KY0180509 Location Code 001 Location Name 81 LAKESHORE DR

PWS Name CENTER RIDGE WATER DISTRICT #2

PWS Address 69 MARGUERITE BLVD, NEW CONCORD, KY 42076

Sample Taken By 1
1 = Trained Homeowner
2 = Trained Utility Representative
3 = Other

PWS Contact WILLIAM M DUNCAN

PWS Phone 270-436-6304

Sample Date (MMDDYYYY) 09162009 Time 0640

Sample Type RT
RT = Routine (For Compliance)
SP = Special (Not for Compliance)

PWS Representative _____ Signature/Date

This Section To Be Completed By Lab

Lab ID: 00030 Lab Sample Number AG96692 Lab Phone 270.821.7375

Lab Analyst Matt Taylor 09/24/2009 Signature/Date

Lab Supervisor Mark Dutton 09/24/09 Signature/Date

Analyte Code	Analyte Name	Analysis Method Code	<	Result (mg/L) -or- Lab Minimum Reporting Limit (mg/L)	Analysis Date (MMDDYYYY)
1022	Copper	797		0.003	09222009
1030	Lead	797		0.003	09222009

SAMPLE CATEGORY = PB
DISTRIBUTION SAMPLING

KENTUCKY DIVISION OF WATER / DRINKING WATER BRANCH
LEAD AND COPPER ANALYSIS REPORT FORM

This Section To Be Completed By Collector

PWS ID KY0180509 Location Code 003 Location Name 216 LAKEPOINT LN.
PWS Name CENTER RIDGE WATER DISTRICT #2
PWS Address 69 MARGUERITE BLVD, NEW CONCORD, KY 42076
PWS Contact WILLIAM M DUNCAN
PWS Phone 270-436-6304
Sample Date (MMDDYYYY) 09162009 Time 0700
Sample Type RT
RT = Routine (For Compliance)
SP = Special (Not for Compliance)
Sample Taken By 1
1 = Trained Homeowner
2 = Trained Utility Representative
3 = Other
PWS Representative _____ Signature/Date

This Section To Be Completed By Lab

Lab ID: 00030 Lab Sample Number AG96693 Lab Phone 270.821.7375
Lab Analyst Matt Taylor 09/24/2009 Signature/Date
Lab Supervisor Mark DeMoss 09/24/09 Signature/Date

Analyte Code	Analyte Name	Analysis Method Code	<	Result (mg/L) -or- Lab Minimum Reporting Limit (mg/L)	Analysis Date (MMDDYYYY)
1022	Copper	797		0.003	09222009
1030	Lead	797		0.003	09222009

SAMPLE CATEGORY = PB
DISTRIBUTION SAMPLING

KENTUCKY DIVISION OF WATER / DRINKING WATER BRANCH
LEAD AND COPPER ANALYSIS REPORT FORM

This Section To Be Completed By Collector

PWS ID KY0180509 Location Code 005 Location Name 283 LAKEPOINT LN.

PWS Name CENTER RIDGE WATER DISTRICT #2

PWS Address 69 MARGUERITE BLVD, NEW CONCORD, KY 42076

Sample Taken By 1
1 = Trained Homeowner
2 = Trained Utility Representative
3 = Other

PWS Contact WILLIAM M DUNCAN

PWS Phone 270-436-6304

Sample Date (MMDDYYYY) 09162009 Time 0710

Sample Type RT
RT = Routine (For Compliance)
SP = Special (Not for Compliance)

PWS Representative _____
Signature/Date

This Section To Be Completed By Lab

Lab ID: 00030 Lab Sample Number AG96694 Lab Phone 270.821.7375

Lab Analyst Matt Taylor 09/24/2009
Signature/Date

Lab Supervisor Mark DeMoss 09/24/09
Signature/Date

Analyte Code	Analyte Name	Analysis Method Code	<	Result (mg/L) -or- Lab Minimum Reporting Limit (mg/L)	Analysis Date (MMDDYYYY)
1022	Copper	797		0.003	09222009
1030	Lead	797		0.003	09222009

SAMPLE CATEGORY = PB
DISTRIBUTION SAMPLING

KENTUCKY DIVISION OF WATER / DRINKING WATER BRANCH
LEAD AND COPPER ANALYSIS REPORT FORM

This Section To Be Completed By Collector

PWS ID KY0180509 Location Code 009 Location Name 15 TEAROSE
PWS Name CENTER RIDGE WATER DISTRICT #2
PWS Address 69 MARGUERITE BLVD, NEW CONCORD, KY 42076
PWS Contact WILLIAM M DUNCAN
PWS Phone 270-436-6304
Sample Date (MMDDYYYY) 09162009 Time 0720
Sample Type RT
RT = Routine (For Compliance)
SP = Special (Not for Compliance)
Sample Taken By 1
1 = Trained Homeowner
2 = Trained Utility Representative
3 = Other
PWS Representative _____ Signature/Date

This Section To Be Completed By Lab

Lab ID: 00030 Lab Sample Number AG96695 Lab Phone 270.821.7375
Lab Analyst Matt Taylor 09/24/2009 Signature/Date
Lab Supervisor Mark DeMoss 09/24/09 Signature/Date

Analyte Code	Analyte Name	Analysis Method Code	<	Result (mg/L) -or- Lab Minimum Reporting Limit (mg/L)	Analysis Date (MMDDYYYY)
1022	Copper	797		0.003	09222009
1030	Lead	797		0.003	09222009

SAMPLE CATEGORY = PB
DISTRIBUTION SAMPLING

KENTUCKY DIVISION OF WATER / DRINKING WATER BRANCH
LEAD AND COPPER ANALYSIS REPORT FORM

This Section To Be Completed By Collector

PWS ID KY0180509 Location Code 013 Location Name 237 LAKESHORE DR.

PWS Name CENTER RIDGE WATER DISTRICT #2

PWS Address 69 MARGUERITE BLVD, NEW CONCORD, KY 42076

Sample Taken By 1
1 = Trained Homeowner
2 = Trained Utility Representative
3 = Other

PWS Contact WILLIAM M DUNCAN

PWS Phone 270-436-6304

Sample Date (MMDDYYYY) 09162009 Time 0650

Sample Type RT
RT = Routine (For Compliance)
SP = Special (Not for Compliance)

PWS Representative _____
Signature/Date

This Section To Be Completed By Lab

Lab ID: 00030 Lab Sample Number AG96696 Lab Phone 270.821.7375

Lab Analyst Matt Taylor 09/24/2009
Signature/Date

Lab Supervisor Mark DeMoss 09/24/09
Signature/Date

Analyte Code	Analyte Name	Analysis Method Code	<	Result (mg/L) -or- Lab Minimum Reporting Limit (mg/L)	Analysis Date (MMDDYYYY)
1022	Copper	797		0.003	09222009
1030	Lead	797		0.003	09222009

McCoy & McCoy Laboratories, Inc.
P.O. Box 907
Madisonville, KY 42431
270-821-7375

SAMPLE ACCEPTANCE/CONDITION CHECKLIST

Client: Center Ridge Logbatch No.: 09091509 Lab No.: AG96692-696

Sample Delivery Type (circle): US Postal UPS FedEx (MMLI) Client _____

Sample Receipt Checklist:

	YES	NO
a. Were custody seals used on outer package, and/or sample containers?		✓
b. Were sample containers received damaged?		✓
c. Cooler Temp. 4° C (circle) (Acceptable) Unacceptable		
d. Were the samples accompanied with a Chain-of-Custody or other transferable document?	✓	
e. Was all information recorded to defend the sample transfer & submittal?	✓	
f. Is each sample and container uniquely identified on the COC?	✓	
g. Were all samples in appropriate containers?	✓	
h. Did all samples have appropriate volumes?	✓	
i. Were all samples submitted within sample holding times?	✓	
j. Were "Collection Methods" recorded?		✓
k. Were "Flow Units" recorded?		

Logged In By: MLM Date: 9/11/09

Exceptions:

Action Required:

_____Client Informed on ____/____/____ Client Rep:_____By:_____

_____No Action Required, see notes

_____No Action Required

Reviewed By: BKH Project Manager Date: 9/18/09

Q:\MADISONVILLE\ADMIN\Forms & Labels\Sample Checklist.doc

McCoy & McCoy Laboratories, Inc.
P. O. Box 907
Madisonville, KY 42431
www.mccoylabs.com

Lexington KY 859-299-7775
Madisonville KY 270-821-7375
Paducah KY 270-444-6547
Pikeville KY 606-432-3104
M.DeMoss@mccoylabs.com

Center Ridge Water System
Attn: William Duncan
69 Marguerite Blvd
Newconcord KY 42076

Reported: 09/25/09
Client: CE648410
Batch No: 09091512

This analytical report has been sent via express courier to the Kentucky Division of Water. We recommend that you contact the DOW to ensure delivery of your data.

SAMPLE CATEGORY = CH
DISTRIBUTION SAMPLING

KENTUCKY DIVISION OF WATER / DRINKING WATER BRANCH

HALOACETIC ACIDS FIVE (HAA5) AND TOTAL TRIHALOMETHANE (TTHM) ANALYSIS REPORT FORM

This Section To Be Completed By Collector

PWS ID KY0180549
PWS Name CENTER RIDGE WATER SYSTEM
PWS Address 69 MARGUERITE BLVD, NEW CONCORD, KY 42076
PWS Contact WILLIAM M DUNCAN
PWS Phone 270-436-6304
Collector Name BILL DUNCAN
Signature/Date

Lab ID 00030
Lab Analyst Tawanna Duncan 09/25/2009
Signature/Date
Lab Phone 270.821.7375
Lab Supervisor Mark Dimon 09/25/09
Signature/Date

This Section To Be Completed By Lab

PWS ID KY0180549 Location Code 006 Location Name RT 6 BOX 262A
Sample Date 09162009 Time 0810 Sample Type RT RT=Routine SP=Special Lab Sample Number AG96699

Analyte Code	Analyte Name	Analysis Method Code	<	Result (mg/L) -or- Lab Minimum Reporting Limit (mg/L)	Analysis Date (MMDDYYYY)
2456	HALOACETIC ACIDES FIVE (HAA5)	737	<	0.001	09252009
2950	TOTAL TRIHALOMETHANE (TTHM)	721	<	0.001	09222009

The signatories of this form certify by their signatures that collection and analysis of the water sample analyzed and the resulting data hereby submitted, were completed in accordance with the provisions of 401 KAR Chapter 8; and that the data submitted on this form is a true an accurate report of the results of collection and analysis performed pursuant to the above-referenced regulations. Violations of 401 KAR Chapter 8 are subject to severe penalties prescribed in KRS 224.99-010, up to $25,000 fine per day per violation and in some cases a violation may subject the violator to prison.

McCoy & McCoy Laboratories, Inc.
P. O. Box 907
Madisonville, KY 42431
www.mccoylabs.com

Chain of Custody

Lexington KY 859-299-7775
Paducah KY 270-444-6547
Louisville KY 502-961-0001
Madisonville KY 270-821-7375
Pikeville KY 606-432-3104

Route: 54 Project SDWA

Center Ridge Water System
Attn: William Duncan
69 Marguerite Blvd
Newconcord KY 42076

Collected by: Bill

Collection Date: 9-16-09

Collection Time: 0816

P. O. No:

PhoneFax: 270-436-6304

CE648410 Center Ridge WD #1 HAA/THM 0180549

Logbatch 09091512

Composite Sample Start Date _____ Time _____

Sample Nos AG9161097

Stop Date _____ Time _____

Field Data By: _____ Date _____ Time _____ Fecal Date _____ Time _____

pH Meter#: _____ pH: _____ DO Meter#: _____ DO: _____

Temp: _____ Cl: _____ Flow: _____ Units: _____ Matrix: Liquid

Collection Method	Test	Analysis Requested	Bottle Type and Preservative
G / C	$DW_501_1	Trihalomethanes (THM)	40 ml Clear Vial NA2S2O3 4 c
G / C	$DW_552_1	EPA 552 Haloacetic Acids	1 Liter Amber Glass NH4CL 4c/Ext Freezer
G / C	DW_EX552_1	Extraction SDWA HAA	1 Liter Amber Glass NH4CL 4c/Ext Freezer

Max Retention

006 - Max Retention Site RT 6 Box 265

006 RT 6 Box 265

Relinquished by: William Duncan Date/Time: 9-16-09 0900

Received by: Derek [illegible] Date/Time: 9/16/09 / 1130

Relinquished by: Derek [illegible] Date/Time: 9/16/09 / 1245

Received by: Mindy Martin Date/Time: 9/16/09 1245

Relinquished by: _____ Date/Time: _____

Received by: _____ Date/Time: _____

FUEL SERVICES

McCoy & McCoy Laboratories, Inc.
P.O. Box 907
Madisonville, KY 42431
270-821-7375

SAMPLE ACCEPTANCE/CONDITION CHECKLIST

Client: Center Ridge Logbatch No.: 09091512 Lab No.: AG96699

Sample Delivery Type (circle): US Postal UPS FedEx MMLI Client _____

Sample Receipt Checklist:

	YES	NO
a. Were custody seals used on outer package, and/or sample containers?		✓
b. Were sample containers received damaged?		✓
c. Cooler Temp. 4°C (circle) Acceptable Unacceptable		
d. Were the samples accompanied with a Chain-of-Custody or other transferable document?	✓	
e. Was all information recorded to defend the sample transfer & submittal?	✓	
f. Is each sample and container uniquely identified on the COC?	✓	
g. Were all samples in appropriate containers?	✓	
h. Did all samples have appropriate volumes?	✓	
i. Were all samples submitted within sample holding times?	✓	
j. Were "Collection Methods" recorded?		✓
k. Were "Flow Units" recorded?		✓

Logged In By: MLM Date: 9/16/09

Exceptions:

Action Required:

_____Client Informed on ____/____/____ Client Rep:_____By:_____

_____No Action Required, see notes

_____No Action Required

Reviewed By: BKH Project Manager Date: 9/18/09

Q:\MADISONVILLE\ADMIN\Forms & Labels\Sample Checklist.doc

McCoy & McCoy Laboratories, Inc.
P. O. Box 907
Madisonville, KY 42431
www.mccoylabs.com

Lexington KY 859-299-7775
Madisonville KY 270-821-7375
Paducah KY 270-444-6547
Pikeville KY 606-432-3104
M.DeMoss@mccoylabs.com

Center Ridge Water Dist #2
Attn: William Duncan
69 Marguerite Blvd
Newconcord KY 42076

Reported: 09/25/09
Client: CE648511
Batch No: 09091506

This analytical report has been sent via express courier to the Kentucky Division of Water. We recommend that you contact the DOW to ensure delivery of your data.

SAMPLE CATEGORY = CH
DISTRIBUTION SAMPLING

KENTUCKY DIVISION OF WATER / DRINKING WATER BRANCH
HALOACETIC ACIDS FIVE (HAA5) AND TOTAL TRIHALOMETHANE (TTHM) ANALYSIS REPORT FORM

This Section To Be Completed By Collector

PWS ID KY0180509
PWS Name CENTER RIDGE WATER DISTRICT #2
PWS Address 69 MARGUERITE BLVD, NEW CONCORD, KY 42076
PWS Contact WILLIAM M DUNCAN
PWS Phone 270-436-6304
Collector Name BILL DUNCAN
Signature/Date

Lab ID 00030
Lab Analyst Tawanna Duncan 09/25/2009
Signature/Date
Lab Phone 270.821.7375
Lab Supervisor Frank DeMoss 09/25/09
Signature/Date

This Section To Be Completed By Lab

PWS ID KY0180509 Location Code 003 Location Name 216 LAKEPOINT LN.
Sample Date 09162009 Time 0630 Sample Type RT RT=Routine SP=Special Lab Sample Number AG96689

Analyte Code	Analyte Name	Analysis Method Code	<	Result (mg/L) -or- Lab Minimum Reporting Limit (mg/L)	Analysis Date (MMDDYYYY)
2456	HALOACETIC ACIDES FIVE (HAA5)	737	<	0.001	09252009
2950	TOTAL TRIHALOMETHANE (TTHM)	721	<	0.001	09222009

The signatories of this form certify by their signatures that collection and analysis of the water sample analyzed and the resulting data hereby submitted, were completed in accordance with the provisions of 401 KAR Chapter 8; and that the data submitted on this form is a true an accurate report of the results of collection and analysis performed pursuant to the above-referenced regulations. Violations of 401 KAR Chapter 8 are subject to severe penalties prescribed in KRS 224.99-010, up to $25,000 fine per day per violation and in some cases a violation may subject the violator to prison.

McCoy & McCoy Laboratories, Inc.
P. O. Box 907
Madisonville, KY 42431
www.mccoylabs.com

Chain of Custody

Lexington KY 859-299-7775
Madisonville KY 270-821-7375
Paducah KY 270-444-6547
Pikeville KY 806-432-3104
Louisville KY 502-961-0001

Route: 54 Project SDWA

Center Ridge Water Dist #2
Attn: William Duncan
69 Marguerite Blvd
Newconcord KY 42076

Collected by: Bill

P. O. No:

Collection Date: 9-16-09

Collection Time: 0630

PhoneFax: 270-436-6304

CE648511 Center Ridge WD #2 HAA/THM 0180509

Logbatch 09091506

Sample Nos AG96689

Composite Sample Start Date _____ Time _____

Stop Date _____ Time _____

Field Data By: _____ Date _____ Time _____ Fecal Date _____ Time _____

pH Meter#: _____ pH: _____ DO Meter#: _____ DO: _____

Temp: _____ Cl: _____ Flow: _____ Units: _____ Matrix: Liquid

Collection Method	Test	Analysis Requested	Bottle Type and Preservative
G / C	DW_EX552_1	Extraction SDWA HAA	1 Liter Amber Glass NH4CL 4c/Ext Freezer
G / C	$DW_501_1	Trihalomethanes (THM)	40 ml Clear Vial NA2S2O3 4 c
G / C	$DW_552_1	EPA 552 Haloacetic Acids	1 Liter Amber Glass NH4CL 4c/Ext Freezer

MR

003 - 216 Lake Point Ln.

003 216 Lake Point Ln

003 15 Kenan DR

Relinquished by: William Duncan Date/Time: 9-16-09 0900

Received by: Derek [illegible] Date/Time: 9/16/09/1130

Relinquished by: Derek [illegible] Date/Time: 9/16/09/1245

Received by: Mandy Martin Date/Time: 9/16/09 1245

Relinquished by: _____ Date/Time: _____

Received by: _____ Date/Time: _____

FUEL SERVICES

McCoy & McCoy Laboratories, Inc.
P.O. Box 907
Madisonville, KY 42431
270-821-7375

SAMPLE ACCEPTANCE/CONDITION CHECKLIST

Client: Center Ridge Logbatch No.: 09091502 Lab No.: AG96689

Sample Delivery Type (circle): US Postal UPS FedEx MMLL Client _____

Sample Receipt Checklist:

	YES	NO
a. Were custody seals used on outer package, and/or sample containers?		✓
b. Were sample containers received damaged?		✓
c. Cooler Temp. 4°C (circle) Acceptable Unacceptable		
d. Were the samples accompanied with a Chain-of-Custody or other transferable document?	✓	
e. Was all information recorded to defend the sample transfer & submittal?	✓	
f. Is each sample and container uniquely identified on the COC?	✓	
g. Were all samples in appropriate containers?	✓	
h. Did all samples have appropriate volumes?	✓	
i. Were all samples submitted within sample holding times?	✓	
j. Were "Collection Methods" recorded?		✓
k. Were "Flow Units" recorded?		✓

Logged In By: MLM Date: 9/14/09

Exceptions:

Action Required:

_____Client Informed on ____/____/____ Client Rep:_____By:_____

_____No Action Required, see notes

_____No Action Required

Reviewed By: BKH Project Manager Date: 9/18/09

Q:\MADISONVILLE\ADMIN\Forms & Labels\Sample Checklist.doc

McCoy & McCoy Laboratories, Inc.
P. O. Box 907
Madisonville, KY 42431
www.mccoylabs.com

Lexington KY 859-299-7775
Madisonville KY 270-821-7375
Paducah KY 270-444-6547
Pikeville KY 606-432-3104
M.DeMoss@mccoylabs.com

Center Ridge Water Dist #3
Attn: William Duncan
69 Marguerite Blvd
Newconcord KY 42076

Reported: 09/25/09
Client: CE648609
Batch No: 09091504

This analytical report has been sent via express courier to the Kentucky Division of Water. We recommend that you contact the DOW to ensure delivery of your data.

SAMPLE CATEGORY = CH
DISTRIBUTION SAMPLING

KENTUCKY DIVISION OF WATER / DRINKING WATER BRANCH
HALOACETIC ACIDS FIVE (HAA5) AND TOTAL TRIHALOMETHANE (TTHM) ANALYSIS REPORT FORM

This Section To Be Completed By Collector

PWS ID KY0180502
PWS Name CENTER RIDGE WATER DISTRICT #3
PWS Address 69 MARGUERITE BLVD, NEW CONCORD, KY 42076
PWS Contact WILLIAM M DUNCAN
PWS Phone 270-436-6304
Collector Name BILL DUNCAN
Signature/Date

Lab ID 00030
Lab Analyst Tawanna Duncan 09/25/2009
Signature/Date
Lab Phone 270.821.7375
Lab Supervisor Mary DeMon 09/25/09
Signature/Date

This Section To Be Completed By Lab

PWS ID KY0180502 Location Code 003 Location Name 13 KENIANA DR
Sample Date 09162009 Time 0610 Sample Type RT (RT=Routine SP=Special) Lab Sample Number AG96686

Analyte Code	Analyte Name	Analysis Method Code	<	Result (mg/L) -or- Lab Minimum Reporting Limit (mg/L)	Analysis Date (MMDDYYYY)
2456	HALOACETIC ACIDES FIVE (HAA5)	737	<	0.001	09242009
2950	TOTAL TRIHALOMETHANE (TTHM)	721	<	0.001	09222009

The signatories of this form certify by their signatures that collection and analysis of the water sample analyzed and the resulting data hereby submitted, were completed in accordance with the provisions of 401 KAR Chapter 8; and that the data submitted on this form is a true an accurate report of the results of collection and analysis performed pursuant to the above-referenced regulations. Violations of 401 KAR Chapter 8 are subject to severe penalties prescribed in KRS 224.99-010, up to $25,000 fine per day per violation and in some cases a violation may subject the violator to prison.

McCoy & McCoy Laboratories, Inc.
P. O. Box 907
Madisonville, KY 42431
www.mccoylabs.com

Chain of Custody

Lexington KY 859-299-7775
Paducah KY 270-444-6547
Louisville KY 502-961-0001
Madisonville KY 270-821-7375
Pikeville KY 606-432-3104

Route: 54 Project SDWA

Center Ridge Water Dist #3
Attn: William Duncan
69 Marguerite Blvd
Newconcord KY 42076

Collected by: Bill

P. O. No:

Collection Date: 9-16-09

Collection Time: 0610

PhoneFax: 270-436-6304

CE648609 Center Ridge WD #3 HAA/THM 0180502

Logbatch 09091504

Sample Nos AG9160086

Composite Sample Start Date _____ Time _____

Stop Date _____ Time _____

Field Data By: _____ Date _____ Time _____ Fecal Date _____ Time _____

pH Meter#: _____ pH: _____ DO Meter#: _____ DO: _____

Temp: _____ Cl: _____ Flow: _____ Units: _____ Matrix: Liquid

Collection Method	Test	Analysis Requested	Bottle Type and Preservative
G / C	$DW_501_1	Trihalomethanes (THM)	40 ml Clear Vial NA2S2O3 4 c
G / C	DW_EX552_1	Extraction SDWA HAA	1 Liter Amber Glass NH4CL 4c/Ext Freezer
G / C	$DW_552_1	EPA 552 Haloacetic Acids	1 Liter Amber Glass NH4CL 4c/Ext Freezer

003- 13 Keniana Dr. Max ~~Rent~~ Retention Site

M.R

003 13 Keniana Dr

Relinquished by: William Duncan Date/Time: 9-16-09 0900

Received by: Derek Pickeast Date/Time: 9/16/09 / 1130

Relinquished by: Derek Pickeast Date/Time: 9/16/09

Received by: Monday Martin Date/Time: 9/16/09 [illegible]

Relinquished by: _____ Date/Time: _____

Received by: _____ Date/Time: _____

FUEL SERVICES

McCoy & McCoy Laboratories, Inc.
P.O. Box 907
Madisonville, KY 42431
270-821-7375

SAMPLE ACCEPTANCE/CONDITION CHECKLIST

Client: Center Ridge Logbatch No. 09091504 Lab No. AG96686

Sample Delivery Type (circle): US Postal UPS FedEx MML Client _____

Sample Receipt Checklist:

	YES	NO
a. Were custody seals used on outer package, and/or sample containers?		✓
b. Were sample containers received damaged?		✓
c. Cooler Temp. 4°C (circle) Acceptable Unacceptable		
d. Were the samples accompanied with a Chain-of-Custody or other transferable document?	✓	
e. Was all information recorded to defend the sample transfer & submittal?	✓	
f. Is each sample and container uniquely identified on the COC?	✓	
g. Were all samples in appropriate containers?	✓	
h. Did all samples have appropriate volumes?	✓	
i. Were all samples submitted within sample holding times?	✓	
j. Were "Collection Methods" recorded?		✓
k. Were "Flow Units" recorded?		✓

Logged In By: MLM Date: 9/11/09

Exceptions:

Action Required:

_____Client Informed on ____/____/____ Client Rep:_____By:_____

_____No Action Required, see notes

_____No Action Required

Reviewed By: BKH Project Manager Date: 9/18/09

Q:\MADISONVILLE\ADMIN\Forms & Labels\Sample Checklist.doc

SAMPLE CATEGORY = TC

KENTUCKY DIVISION OF WATER / DRINKING WATER BRANCH
BACTERIOLOGICAL ANALYSIS REPORT FORM

General Information – This Section To Be Completed By Collector

PWS ID: KY0180549

Compliance Period (MMYYYY): 102009

PWS Name: CRWD #1

PWS Contact: Bill

Collection Date (MMDDYYYY): 10142009
(All Samples Reported on this Form were Collected on this Date.)

PWS Address: 69 Marguerite Rd New Concord Ky 42076

PWS Phone: 270-436-6304

Collector Name: William Duncan 10-14-09
Signature/Date

General Information – This Section To Be Completed By Lab

Lab ID: 60097

Lab Receipt Date (MMDDYYYY): 10142009

Analysis Date (MMDDYYYY): 10142009

Total Coliform Analysis Method Code: 908

E Coli Analysis Method Code:

Lab Analyst: Mindy Martin 10/15/09
Signature/Date

Lab Supervisor: 10/15/09
Signature/Date

Sample Information – This Section To Be Completed By Collector

Sample Type (RT, RP, or SP) (See Key)	Special Sample Reason (A, B, C, D, or E) (See Key)	Replacement Sample? (Y or Blank)	Location Code (See Instructions)	Repeat Location Code (DN, UP, or OR) (See Key)	Sample Time (24 hr)	Free Chlorine (Required for all disinfectants except Chloramine)	Total Chlorine (Required when disinfectant is Chloramine)
RT			005		0730	1.21	1.29

Analysis Information – This Section To Be Completed By Lab

Lab Sample Number	Analysis Time (24 hr)	Result (Total Coliform Count - or - TNTC - or - CNFG) (See Key)	Total Coliform (P/A)	E Coli (P/A)	Lab Sample Number of Original Sample (Required for Repeat and/or Replacement Samples) (See Instructions)
AH02822	1500		A		

The signatories of this form certify by their signatures that collection and analysis of the water sample analyzed and the resulting data hereby submitted, were completed in accordance with the provisions of 401 KAR Chapter 8, specifically including but not limited to 401 KAR 8:200, Section 1 and 401 KAR 8:040; and that the data submitted on this form is a true and accurate report of the results of collection and analysis performed pursuant to the above-referenced regulations. Violations of 401 KAR Chapter 8 are subject to severe penalties prescribed in KRS 224.99-010, up to $25,000 fine per day per violation and in some cases a violation may subject the violator to prison.

BACTERIOLOGICAL ANALYSIS REPORT FROM KEY

Sample Type:	RT = Routine (For Compliance)	RP = Repeat (For Compliance)	SP = Special (Not for Compliance)
Special Sample Reason: (Only if Sample Type = SP)	A = Suspected Contamination B = New Plant, Modification, or Line Extension	C = Treatment Modification D = Study/Investigation	E = Line Break, Emergency Repair
Repeat Location Code: (Only if Sample Type = RP)	DN = Downstream	UP = Upstream	OR = Original Site

McCoy & McCoy Laboratories, Inc.
www.mccoylabs.com

PO Box 907 * 825 Industrial Rd.
Madisonville, KY 42431
270.821.7375
270.825.9200 fax

2456 Fortune Dr., Suite 160
Lexington, KY 40509
859.299.7775
859.299.7785 fax

173 Island Creek Rd.
Pikeville, KY 41501
606.432.3104
606.432.3171 fax

1800 Kentucky Ave.
Paducah, KY 42003
270.444.6547
270.444.6572 fax

5510 Fern Valley Rd.
Suite 104 Promenade Pavilion
Louisville, KY 40228
502.961.0001

CHAIN OF CUSTODY and ANALYTICAL REQUEST

Please print legibly.

SHADED AREA FOR LAB USE ONLY

Client: CRWD #1

Phone/Email:

Bill To:

Phone/Email

Send Results to:

Phone/Email:

Compliance Monitoring (check one)? Yes ☐ No ☐

Samples Chlorinated (check one)? Yes ☐ No ☐

PO#

PWS ID#

STATE

MMLI Quote # (if applicable)

Batch#

Project Name

Collected by (Signature): Bill

Sample ID#	COLLECTION DATE	COLLECTION TIME (24 hr)	SAMPLE DESCRIPTION Composite samples indicate begin time, end time and temp (°C) at end time	SAMPLE ANALYSIS REQUESTED Method ID if known (i.e. 8260B, 6010B/7470A...)	SAMPLE REMARKS (i.e. composite, grab, field readings, corrosive...)	Field Data pH S.U.	Field Data Temp °C	# OF CONTAINERS	MATRIX CODE (See Lower Left)	PRESERVATIVE CODE (See Lowerr Left)
	10-19-09	0730	905	RT						

1. Expedited services not available for all services, please call. 2. Samples received unannounced with less than 48 hours holding time remaining may be subject to additional surcharges. 3. Lab reserves the right to return unused portions of samples to client.

Relinquished by: (Signature)	Received By: (Signature)	DATE	TIME (24 hr)
William Duncan	Derek P Hart	10-19-09	0900
Relinquished by: (Signature)	Received by: (Signature)	DATE	TIME (24 hr)
Relinquished by: (Signature)	Received for MMLI by:	DATE	TIME (24 hr)

MATRIX CODES:
DW – Drinking Water
SW – Solid Waste
SO – Soil/Solid
SL – Sludge
GW – Ground Water
WW – Waste Water
OL – Oil
SU – Surface Water

PRESERVATIVE CODES:
NI – Nitric acid (HNO_3)
HA – Hydrochloric Acid (HCl)
SH – Sodium Hydroxide (NaOH)
ST – Sodium Thiosulfate
ZN – Zinc acetate
SA – Sulfuric Acid (H_2SO_4)
4C – 4°C
AA – Ascorbic Acid
NO – No preservative
SS – Sodium sulfite

CONDITIONS UPON RECEIPT (CHECK ONE)
☐ Iced wet/Blue ____ °C Temp
☐ Ambient ____ °C Temp ☐ N/A

	YES	NO	N/A
Custody seals present/intact?	☐	☐	☐
Broken containers?	☐	☐	☐
COC agree with sample Labels?	☐	☐	☐
Correct containers for testing?	☐	☐	☐
Headspace issues acceptable?	☐	☐	☐
Holding time(s) acceptable?	☐	☐	☐
Preservative pH's acceptable?	☐	☐	☐
Was pH left unadjusted?	☐	☐	☐
All samples listed on COC received?	☐	☐	☐
Samples properly preserved?	☐	☐	☐
Client's sample documents received?	☐	☐	☐
COC been relinquished?	☐	☐	☐
Are tests listed for each sample?	☐	☐	☐

Method of Shipment (check one): UPS ☐ FedEx ☐ MMLI ☐ US Postal ☐ Client ☐

Date Shipped:
Airbill#:
Logged in by: Location:
LAB NOTES:

Follow up action required: YES ☐ NO ☐
Client informed on:
Client Rep:
By:
Reviewed by:
Date:

SAMPLE CATEGORY = TC

KENTUCKY DIVISION OF WATER / DRINKING WATER BRANCH
BACTERIOLOGICAL ANALYSIS REPORT FORM

General Information – This Section To Be Completed By Collector

PWS ID: KY0180509

PWS Name: CRWD #2

PWS Contact: Bill

PWS Address: 69 Marguerite New Concord Ky 42076

PWS Phone: 270-436-6304

Compliance Period (MMYYYY): 102009

Collection Date (MMDDYYYY): 10/14/2009
(All Samples Reported on this Form were Collected on this Date.)

Collector Name: William Duncan 10-14-09
Signature/Date

General Information – This Section To Be Completed By Lab

Lab ID: 00091

Lab Receipt Date (MMDDYYYY): 10/14/2009

Analysis Date (MMDDYYYY): 10/14/2009

Total Coliform Analysis Method Code: 087

E Coli Analysis Method Code:

Lab Analyst: Mindy Martin 10/15/09
Signature/Date

Lab Supervisor: 10/15/09
Signature/Date

Sample Information – This Section To Be Completed By Collector

Sample Type (RT, RP, or SP) (See Key)	Special Sample Reason (A, B, C, D, or E) (See Key)	Replacement Sample? (Y or Blank)	Location Code (See Instructions)	Repeat Location Code (DN, UP, or OR) (See Key)	Sample Time (24 hr)	Free Chlorine (Required for all disinfectants except Chloramine)	Total Chlorine (Required when disinfectant is Chloramine)
RT			105		0630	1.06	1.12
						.	.
						.	.
						.	.
						.	.
						.	.
						.	.
						.	.
						.	.
						.	.

Analysis Information – This Section To Be Completed By Lab

Lab Sample Number	Analysis Time (24 hr)	Result (Total Coliform Count - or - TNTC - or - CNFG) (See Key)	Total Coliform (P/A)	E Coli (P/A)	Lab Sample Number of Original Sample (Required for Repeat and/or Replacement Samples) (See Instructions)
AH02823	1600		A		

The signatories of this form certify by their signatures that collection and analysis of the water sample analyzed and the resulting data hereby submitted, were completed in accordance with the provisions of 401 KAR Chapter 8, specifically including but not limited to 401 KAR 8:200, Section 1 and 401 KAR 8:040; and that the data submitted on this form is a true and accurate report of the results of collection and analysis performed pursuant to the above-referenced regulations. Violations of 401 KAR Chapter 8 are subject to severe penalties prescribed in KRS 224.99-010, up to $25,000 fine per day per violation and in some cases a violation may subject the violator to prison.

BACTERIOLOGICAL ANALYSIS REPORT FROM KEY

Sample Type:	RT = Routine (For Compliance)	RP = Repeat (For Compliance)	SP = Special (Not for Compliance)
Special Sample Reason: (Only If Sample Type = SP)	A = Suspected Contamination B = New Plant, Modification, or Line Extension	C = Treatment Modification D = Study/Investigation	E = Line Break, Emergency Repair
Repeat Location Code: (Only If Sample Type = RP)	DN = Downstream	UP = Upstream	OR = Original Site

McCoy & McCoy Laboratories, Inc.
www.mccoylabs.com

PO Box 907 * 825 Industrial Rd.
Madisonville, KY 42431
270.821.7375
270.825.9200 fax

2456 Fortune Dr., Suite 160
Lexington, KY 40509
859.299.7775
859.299.7785 fax

173 Island Creek Rd.
Pikeville, KY 41501
606.432.3104
606.432.3171 fax

1800 Kentucky Ave.
Paducah, KY 42003
270.444.6547
270.444.6572 fax

5510 Fern Valley Rd.
Suite 104 Promenade Pavilion
Louisville, KY 40228
502.961.0001

SHADED AREA FOR LAB USE ONLY

CHAIN OF CUSTODY and ANALYTICAL REQUEST

Please print legibly.

Client:	Bill To:	Send Results to:	Compliance Monitoring (check one)? Yes ☐ No ☐ Samples Chlorinated (check one)? Yes ☐ No ☐	PO#
Phone/Email:	Phone/Email	Phone/Email:	PWS ID# / STATE	
Batch#	Project Name	Collected by (Signature):	MMLI Quote # (if applicable)	

Sample ID#	COLLECTION DATE	COLLECTION TIME (24 hr)	SAMPLE DESCRIPTION Composite samples indicate begin time, end time and temp (°C) at end time	SAMPLE ANALYSIS REQUESTED Method ID if known (i.e. 8260B, 6010B/7470A...)	SAMPLE REMARKS (i.e. composite, grab, field readings, corrosive...)	Field Data pH S.U.	Field Data Temp °C	# OF CONTAINERS	MATRIX CODE (See Lower Left)	PRESERVATIVE CODE (See Lower Left)

1. Expedited services not available for all services, please call. 2. Samples received unannounced with less than 48 hours holding time remaining may be subject to additional surcharges. 3. Lab reserves the right to return unused portions of samples to client.

Relinquished by: (Signature)	Received By: (Signature)	DATE	TIME (24 hr)
Relinquished by: (Signature)	Received by: (Signature)	DATE	TIME (24 hr)
Relinquished by: (Signature)	Received for MMLI by:	DATE	TIME (24 hr)

CONDITIONS UPON RECEIPT (CHECK ONE)
☐ Iced/wet/Blue ____ °C Temp
☐ Ambient ____ °C Temp ☐ N/A

	YES	NO	N/A
Custody seals present/intact?	☐	☐	☐
Broken containers?	☐	☐	☐
COC agree with sample Labels?	☐	☐	☐
Correct containers for testing?	☐	☐	☐
Headspace issues acceptable?	☐	☐	☐
Holding time(s) acceptable?	☐	☐	☐
Preservative pH's acceptable?	☐	☐	☐
Was pH left unadjusted?	☐	☐	☐
All samples listed on COC received?	☐	☐	☐
Samples properly preserved?	☐	☐	☐
Client's sample documents received?	☐	☐	☐
COC been relinquished?	☐	☐	☐
Are tests listed for each sample?	☐	☐	☐

Method of Shipment (check one): UPS ☐ FedEx ☐ MMLI ☐ US Postal ☐ Client ☐
Date Shipped:
Airbill#:
Logged in by: Location:
LAB NOTES:
Follow up action required: YES ☐ NO ☐
Client informed on:
Client Rep.:
By:
Reviewed by:
Date:

MATRIX CODES:
DW – Drinking Water
GW – Ground Water
SW – Solid Waste
WW – Waste Water
SO – Soil/Solid
OL – Oil
SL – Sludge
SU – Surface Water

PRESERVATIVE CODES:
NI – Nitric acid (HNO_3)
HA – Hydrochloric Acid (HCl)
SH – Sodium Hydroxide (NaOH)
ST – Sodium Thiosulfate
ZN – Zinc acetate
SA – Sulfuric Acid (H_2SO_4)
4C – 4°C
AA – Ascorbic Acid
NO – No preservative
SS – Sodium sulfite

SAMPLE CATEGORY = TC

KENTUCKY DIVISION OF WATER / DRINKING WATER BRANCH
BACTERIOLOGICAL ANALYSIS REPORT FORM

General Information – This Section To Be Completed By Collector

PWS ID: KY0180598

PWS Name: CRWD # 3

PWS Contact: Bill

PWS Address: 69 Marguerite New Concord Ky 42076

PWS Phone: 270-436-6304

Compliance Period (MMYYYY): 102009

Collection Date (MMDDYYYY): 10142009
(All Samples Reported on this Form were Collected on this Date.)

Collector Name: William Duncan 10-14-09
Signature/Date

General Information – This Section To Be Completed By Lab

Lab ID: 00097

Lab Receipt Date (MMDDYYYY): 10142009

Analysis Date (MMDDYYYY): 10142009

Total Coliform Analysis Method Code: 078

E Coli Analysis Method Code:

Lab Analyst: Mindy Martin 10/15/09
Signature/Date

Lab Supervisor: [signature] 10/28/09
Signature/Date

Sample Information – This Section To Be Completed By Collector

Sample Type (RT, RP, or SP) (See Key)	Special Sample Reason (A, B, C, D, or E) (See Key)	Replacement Sample? (Y or Blank)	Location Code (See Instructions)	Repeat Location Code (DN, UP, or OR) (See Key)	Sample Time (24 hr)	Free Chlorine (Required for all disinfectants except Chloramine)	Total Chlorine (Required when disinfectant is Chloramine)
RT			005		0600	1.08	1.16

Analysis Information – This Section To Be Completed By Lab

Lab Sample Number	Analysis Time (24 hr)	Result (Total Coliform Count - or - TNTC - or - CNFG) (See Key)	Total Coliform (P/A)	E Coli (P/A)	Lab Sample Number of Original Sample (Required for Repeat and/or Replacement Samples) (See Instructions)
AH08827	1500		A		

The signatories of this form certify by their signatures that collection and analysis of the water sample analyzed and the resulting data hereby submitted, were completed in accordance with the provisions of 401 KAR Chapter 8, specifically including but not limited to 401 KAR 8:200, Section 1 and 401 KAR 8:040; and that the data submitted on this form is a true and accurate report of the results of collection and analysis performed pursuant to the above-referenced regulations. Violations of 401 KAR Chapter 8 are subject to severe penalties prescribed in KRS 224.99-010, up to $25,000 fine per day per violation and in some cases a violation may subject the violator to prison.

BACTERIOLOGICAL ANALYSIS REPORT FROM KEY

Sample Type:	RT = Routine (For Compliance)	RP = Repeat (For Compliance)	SP = Special (Not for Compliance)
Special Sample Reason: (Only if Sample Type = SP)	A = Suspected Contamination B = New Plant, Modification, or Line Extension	C = Treatment Modification D = Study/Investigation	E = Line Break, Emergency Repair
Repeat Location Code:	DN = Downstream	UP = Upstream	OR = Original Site

McCoy & McCoy Laboratories, Inc.
www.mccoylabs.com

PO Box 907 * 825 Industrial Rd.
Madisonville, KY 42431
270.821.7375
270.825.9200 fax

2456 Fortune Dr., Suite 160
Lexington, KY 40509
859.299.7775
859.299.7785 fax

173 Island Creek Rd.
Pikeville, KY 41501
606.432.3104
606.432.3171 fax

1800 Kentucky Ave.
Paducah, KY 42003
270.444.6547
270.444.6572 fax

5510 Fern Valley Rd.
Suite 104 Promenade Pavilion
Louisville, KY 40228
502.961.0001

SHADED AREA FOR LAB USE ONLY

CHAIN OF CUSTODY and ANALYTICAL REQUEST

Please print legibly.

Client:	Bill To:	Send Results to:	Compliance Monitoring (check one)? Yes ☐ No ☐ / Samples Chlorinated (check one)? Yes ☐ No ☐	PO#
CRWD #3				
Phone/Email:	Phone/Email	Phone/Email:	PWS ID# / STATE	
Batch#	Project Name	Collected by (Signature): [illegible]	MMLI Quote # (if applicable)	

Sample ID#	COLLECTION DATE	COLLECTION TIME (24 hr)	SAMPLE DESCRIPTION Composite samples indicate begin time, end time and temp (°C) at end time	SAMPLE ANALYSIS REQUESTED Method ID if known (i.e. 8260B, 6010B/7470A...)	SAMPLE REMARKS (i.e. composite, grab, field readings, corrosive...)	Field Data pH S.U.	Field Data Temp °C	# OF CONTAINERS	MATRIX CODE (See Lower Left)	PRESERVATIVE CODE (See Lower Left)
	10-14-09	0600	005	KT						

1. Expedited services not available for all services, please call. 2. Samples received unannounced with less than 48 hours holding time remaining may be subject to additional surcharges. 3. Lab reserves the right to return unused portions of samples to client.

Relinquished by: (Signature)	Received By: (Signature)	DATE	TIME (24 hr)
William Duncan	[signature]	10-14-09	0900
Relinquished by: (Signature)	Received by: (Signature)	DATE	TIME (24 hr)
Relinquished by: (Signature)	Received for MMLI by:	DATE	TIME (24 hr)

MATRIX CODES:
DW – Drinking Water
SW – Solid Waste
SO – Soil/Solid
SL – Sludge
GW – Ground Water
WW – Waste Water
OL – Oil
SU – Surface Water

PRESERVATIVE CODES:
NI – Nitric acid (HNO_3)
HA – Hydrochloric Acid (HCl)
SH – Sodium Hydroxide (NaOH)
ST – Sodium Thiosulfate
ZN – Zinc acetate
SA – Sulfuric Acid (H_2SO_4)
4C – 4°C
AA – Ascorbic Acid
NO – No preservative
SS – Sodium sulfite

CONDITIONS UPON RECEIPT (CHECK ONE)
☐ Iced wet/Blue °C Temp
☐ Ambient °C Temp ☐ N/A

	YES	NO	N/A
Custody seals present/intact?	☐	☐	☐
Broken containers?	☐	☐	☐
COC agree with sample Labels?	☐	☐	☐
Correct containers for testing?	☐	☐	☐
Headspace issues acceptable?	☐	☐	☐
Holding time(s) acceptable?	☐	☐	☐
Preservative pH's acceptable?	☐	☐	☐
Was pH left unadjusted?	☐	☐	☐
All samples listed on COC received?	☐	☐	☐
Samples properly preserved?	☐	☐	☐
Client's sample documents received?	☐	☐	☐
COC been relinquished?	☐	☐	☐
Are tests listed for each sample?	☐	☐	☐

Method of Shipment (check one): UPS ☐ FedEx ☐ MMLI ☐ US Postal ☐ Client ☐
Date Shipped:
Airbill#:
Logged in by: Location:
LAB NOTES
Follow up action required: YES ☐ NO ☐
Client informed on:
Client Rep:
By:
Reviewed by:
Date:

SAMPLE CATEGORY = TC

KENTUCKY DIVISION OF WATER / DRINKING WATER BRANCH
BACTERIOLOGICAL ANALYSIS REPORT FORM

General Information – This Section To Be Completed By Collector

PWS ID: KY0183106

PWS Name: CRWD # 4

PWS Contact: Bill

PWS Address: 69 Marguerite New Concord Ky 42076

PWS Phone: 270-436-6304

Compliance Period (MMYYYY): 102009

Collection Date (MMDDYYYY): 10142009 (All Samples Reported on this Form were Collected on this Date.)

Collector Name: William Duncan 10-14-09 (Signature/Date)

General Information – This Section To Be Completed By Lab

Lab ID: 80007

Lab Receipt Date (MMDDYYYY): 10142009

Analysis Date (MMDDYYYY): 10142009

Total Coliform Analysis Method Code: 098

E Coli Analysis Method Code:

Lab Analyst: Mindy Martin 10/15/09 (Signature/Date)

Lab Supervisor: [signature] 10/15/09 (Signature/Date)

Sample Information – This Section To Be Completed By Collector

Sample Type (RT, RP, or SP) (See Key)	Special Sample Reason (A, B, C, D, or E) (See Key)	Replacement Sample? (Y or Blank)	Location Code (See Instructions)	Repeat Location Code (DN, UP, or OR) (See Key)	Sample Time (24 hr)	Free Chlorine (Required for all disinfectants except Chloramine)	Total Chlorine (Required when disinfectant is Chloramine)
RT			020		0800	1.24	1.31
						.	.
						.	.
						.	.
						.	.
						.	.
						.	.
						.	.
						.	.
						.	.

Analysis Information – This Section To Be Completed By Lab

Lab Sample Number	Analysis Time (24 hr)	Result (Total Coliform Count - or - TNTC - or - CNFG) (See Key)	Total Coliform (P/A)	E Coli (P/A)	Lab Sample Number of Original Sample (Required for Repeat and/or Replacement Samples) (See Instructions)
AH02825	1500		A		

The signatories of this form certify by their signatures that collection and analysis of the water sample analyzed and the resulting data hereby submitted, were completed in accordance with the provisions of 401 KAR Chapter 8, specifically including but not limited to 401 KAR 8:200, Section 1 and 401 KAR 8:040, and that the data submitted on this form is a true and accurate report of the results of collection and analysis performed pursuant to the above-referenced regulations. Violations of 401 KAR Chapter 8 are subject to severe penalties prescribed in KRS 224.99-010, up to $25,000 fine per day per violation and in some cases a violation may prohibit the violator to prison.

BACTERIOLOGICAL ANALYSIS REPORT FROM KEY

Sample Type:	RT = Routine (For Compliance)	RP = Repeat (For Compliance)	SP = Special (Not for Compliance)
Special Sample Reason: (Only if Sample Type = SP)	A = Suspected Contamination B = New Plant, Modification, or Line Extension	C = Treatment Modification D = Study/Investigation	E = Line Break, Emergency Repair
Repeat Location Code:	DN = Downstream	UP = Upstream	OR = Original Site

McCoy & McCoy Laboratories, Inc.
www.mccoylabs.com

PO Box 907 * 825 Industrial Rd.
Madisonville, KY 42431
270.821.7375
270.825.9200 fax

2456 Fortune Dr., Suite 160
Lexington, KY 40509
859.299.7775
859.299.7785 fax

173 Island Creek Rd.
Pikeville, KY 41501
606.432.3104
606.432.3171 fax

1800 Kentucky Ave.
Paducah, KY 42003
270.444.6547
270.444.6572 fax

5510 Fern Valley Rd.
Suite 104 Promenade Pavilion
Louisville, KY 40228
502.961.0001

SHADED AREA FOR LAB USE ONLY

CHAIN OF CUSTODY and ANALYTICAL REQUEST

Please print legibly.

Client:	Bill To:	Send Results to:	Compliance Monitoring (check one)? Yes ☐ No ☐ Samples Chlorinated (check one)? Yes ☐ No ☐	PO#
(Run # 4				
Phone/Email:	Phone/Email	Phone/Email:	PWS ID# / STATE	
Batch#	Project Name	Collected by (Signature):	MMLI Quote # (if applicable)	

Sample ID#	COLLECTION DATE	COLLECTION TIME (24 hr)	SAMPLE DESCRIPTION Composite samples indicate begin time, end time and temp (°C) at end time	SAMPLE ANALYSIS REQUESTED Method ID if known (i.e. 8260B, 6010B/7470A...)	SAMPLE REMARKS (i.e. composite, grab, field readings, corrosive...)	Field Data pH S.U.	Field Data Temp °C	# OF CONTAINERS	MATRIX CODE (See Lower Left)	PRESERVATIVE CODE (See Lower Left)
	10-14-15	0800	020	AT						

1. Expedited services not available for all services, please call. 2. Samples received unannounced with less than 48 hours holding time remaining may be subject to additional surcharges. 3. Lab reserves the right to return unused portions of samples to client.

Relinquished by: (Signature)	Received By: (Signature)	DATE	TIME (24 hr)
[illegible]	[illegible]	10-14-15	0800
Relinquished by: (Signature)	Received by: (Signature)	DATE	TIME (24 hr)
Relinquished by: (Signature)	Received for MMLI by:	DATE	TIME (24 hr)

CONDITIONS UPON RECEIPT (CHECK ONE)
☐ Iced wet/Blue ____ °C Temp
☐ Ambient ____ °C Temp ☐ N/A

	YES	NO	N/A
Custody seals present/intact?	☐	☐	☐
Broken containers?	☐	☐	☐
COC agree with sample Labels?	☐	☐	☐
Correct containers for testing?	☐	☐	☐
Headspace issues acceptable?	☐	☐	☐
Holding time(s) acceptable?	☐	☐	☐
Preservative pH's acceptable?	☐	☐	☐
Was pH left unadjusted?	☐	☐	☐
All samples listed on COC received?	☐	☐	☐
Samples properly preserved?	☐	☐	☐
Client's sample documents received?	☐	☐	☐
COC been relinquished?	☐	☐	☐
Are tests listed for each sample?	☐	☐	☐

Method of Shipment (check one): UPS ☐ FedEx ☐ MMLI ☐ US Postal ☐ Client ☐
Date Shipped:
Airbill#:
Logged in by: Location:
LAB NOTES
Follow up action required YES ☐ NO ☐
Client informed on:
Client Rep.:
By:
Reviewed by:
Date:

MATRIX CODES:
DW – Drinking Water
SW – Solid Waste
SO – Soil/Solid
SL – Sludge
GW – Ground Water
WW – Waste Water
OL – Oil
SU – Surface Water

PRESERVATIVE CODES:
NI – Nitric acid (HNO_3)
HA – Hydrochloric Acid (HCl)
SH – Sodium Hydroxide (NaOH)
ST – Sodium Thiosulfate
ZN – Zinc acetate
SA – Sulfuric Acid (H_2SO_4)
4C – 4°C
AA – Ascorbic Acid
NO – No preservative
SS – Sodium sulfite

SAMPLE CATEGORY = TC

KENTUCKY DIVISION OF WATER / DRINKING WATER BRANCH
BACTERIOLOGICAL ANALYSIS REPORT FORM

General Information – This Section To Be Completed By Collector

PWS ID: KY0180549

Compliance Period (MMYYYY): 102009

PWS Name: CRWD # 1

PWS Contact: Bill

Collection Date (MMDDYYYY): 10 27 2009
(All Samples Reported on this Form were Collected on this Date.)

PWS Address: 69 Marguerite New Concord Ky 42076

PWS Phone: 270-436-6304

Collector Name: William Duncan 10-28-09
Signature/Date

General Information – This Section To Be Completed By Lab

Lab ID: 00031

Lab Receipt Date (MMDDYYYY): 10222009

Total Coliform Analysis Method Code: 328

Analysis Date (MMDDYYYY): 10202009

E Coli Analysis Method Code:

Lab Analyst: Mindy Martin 10/29/09
Signature/Date

Lab Supervisor: [signature] 10/29/09
Signature/Date

Sample Information – This Section To Be Completed By Collector

Sample Type (RT, RP, or SP) (See Key)	Special Sample Reason (A, B, C, D, or E) (See Key)	Replacement Sample? (Y or Blank)	Location Code (See Instructions)	Repeat Location Code (DN, UP, or OR) (See Key)	Sample Time (24 hr)	Free Chlorine (Required for all disinfectants except Chloramine)	Total Chlorine (Required when disinfectant is Chloramine)
RT			001		0730	1.31	1.39
						.	.
						.	.
						.	.
						.	.
						.	.
						.	.
						.	.
						.	.
						.	.

Analysis Information – This Section To Be Completed By Lab

Lab Sample Number	Analysis Time (24 hr)	Result (Total Coliform Count - or - TNTC - or - CNFG) (See Key)	Total Coliform (P/A)	E Coli (P/A)	Lab Sample Number of Original Sample (Required for Repeat and/or Replacement Samples) (See Instructions)
A405838	1220		A		

The signatories of this form certify by their signatures that collection and analysis of the water sample analyzed and the resulting data hereby submitted, were completed in accordance with the provisions of 401 KAR Chapter 8, specifically including but not limited to 401 KAR 8:200, Section 1 and 401 KAR 8:040; and that the data submitted on this form is a true and accurate report of the results of collection and analysis performed pursuant to the above-referenced regulations. Violations of 401 KAR Chapter 8 are subject to severe penalties prescribed in KRS 224.99-010, up to $25,000 fine per day per violation and in some cases a violation may subject the violator to prison.

BACTERIOLOGICAL ANALYSIS REPORT FROM KEY

Sample Type:	RT = Routine (For Compliance)	RP = Repeat (For Compliance)	SP = Special (Not for Compliance)
Special Sample Reason: (Only if Sample Type = SP)	A = Suspected Contamination B = New Plant, Modification, or Line Extension	C = Treatment Modification D = Study/Investigation	E = Line Break, Emergency Repair
Repeat Location Code: (Only if Sample Type = RP)	DN = Downstream	UP = Upstream	OR = Original Site

McCoy & McCoy Laboratories, Inc.
www.mccoylabs.com

PO Box 907 * 825 Industrial Rd.
Madisonville, KY 42431
270.821.7375
270.825.9200 fax

2456 Fortune Dr., Suite 160
Lexington, KY 40509
859.299.7775
859.299.7785 fax

173 Island Creek Rd.
Pikeville, KY 41501
606.432.3104
606.432.3171 fax

1800 Kentucky Ave.
Paducah, KY 42003
270.444.6547
270.444.6572 fax

5510 Fern Valley Rd.
Suite 104 Promenade Pavilion
Louisville, KY 40228
502.961.0001

SHADED AREA FOR LAB USE ONLY

CHAIN OF CUSTODY and ANALYTICAL REQUEST

Please print legibly.

Client:	Bill To:	Send Results to:	Compliance Monitoring (check one)? Yes ☐ No ☐ Samples Chlorinated (check one)? Yes ☐ No ☐	PO#
CRWD E 1				
Phone/Email:	Phone/Email	Phone/Email:	PWS ID# / STATE	
Batch#	Project Name	Collected by (Signature): BJD	MMLI Quote # (if applicable)	

Sample ID#	COLLECTION DATE	TIME (24 hr)	SAMPLE DESCRIPTION Composite samples indicate begin time, end time and temp (°C) at end time	SAMPLE ANALYSIS REQUESTED Method ID if known (i.e. 8260B, 6010B/7470A...)	SAMPLE REMARKS (i.e. composite, grab, field readings, corrosive...)	Field Data pH S.U.	Field Data Temp °C	# OF CONTAINERS	MATRIX CODE (See Lower Left)	PRESERVATIVE CODE (See Lower Left)
	[illegible]	0730	001	KT						

1. Expedited services not available for all services, please call. 2. Samples received unannounced with less than 48 hours holding time remaining may be subject to additional surcharges. 3. Lab reserves the right to return unused portions of samples to client.

Relinquished by: (Signature)	Received By: (Signature)	DATE	TIME (24 hr)
[illegible]	[illegible]	[illegible]	0730
Relinquished by: (Signature)	Received by: (Signature)	DATE	TIME (24 hr)
Relinquished by: (Signature)	Received for MMLI by:	DATE	TIME (24 hr)

CONDITIONS UPON RECEIPT (CHECK ONE)
☐ Iced wet/Blue °C Temp
☐ Ambient °C Temp ☐ N/A

	YES	NO	N/A
Custody seals present/intact?	☐	☐	☐
Broken containers?	☐	☐	☐
COC agree with sample Labels?	☐	☐	☐
Correct containers for testing?	☐	☐	☐
Headspace issues acceptable?	☐	☐	☐
Holding time(s) acceptable?	☐	☐	☐
Preservative pH's acceptable?	☐	☐	☐
Was pH left unadjusted?	☐	☐	☐
All samples listed on COC received?	☐	☐	☐
Samples properly preserved?	☐	☐	☐
Client's sample documents received?	☐	☐	☐
COC been relinquished?	☐	☐	☐
Are tests listed for each sample?	☐	☐	☐

Method of Shipment (check one): UPS ☐ FedEx ☐ MMLI ☐ US Postal ☐ Client ☐
Date Shipped:
Airbill #:
Logged in by: Location:
LAB NOTES:
Follow up action required: YES ☐ NO ☐
Client informed on:
Client Rep:
By:
Reviewed by:
Date:

MATRIX CODES:
DW – Drinking Water
SW – Solid Waste
SO – Soil/Solid
SL – Sludge
GW – Ground Water
WW – Waste Water
OL – Oil
SU – Surface Water

PRESERVATIVE CODES:
NI – Nitric acid (HNO_3)
HA – Hydrochloric Acid (HCl)
SH – Sodium Hydroxide (NaOH)
ST – Sodium Thiosulfate
ZN – Zinc acetate
SA – Sulfuric Acid (H_2SO_4)
4C – 4°C
AA – Ascorbic Acid
NO – No preservative
SS – Sodium sulfite

SAMPLE CATEGORY = TC

KENTUCKY DIVISION OF WATER / DRINKING WATER BRANCH
BACTERIOLOGICAL ANALYSIS REPORT FORM

General Information – This Section To Be Completed By Collector

PWS ID: KY0180509

Compliance Period (MMYYYY): 102009

PWS Name: CRWD #2

PWS Contact: Bill

Collection Date (MMDDYYYY): 10/28/2009 (All Samples Reported on this Form were Collected on this Date.)

PWS Address: 69 Marguerite Rd Concord Ky 42076

PWS Phone: 270-436-6304

Collector Name: William Duncan 10-28-09 (Signature/Date)

General Information – This Section To Be Completed By Lab

Lab ID: 0031

Lab Receipt Date (MMDDYYYY): 10/28/2009

Total Coliform Analysis Method Code: 378

Analysis Date (MMDDYYYY): 10/29/2009

E Coli Analysis Method Code:

Lab Analyst: Mindy Martinez 10/29/09 (Signature/Date)

Lab Supervisor: (Signature/Date) 10/29/09

Sample Information – This Section To Be Completed By Collector

Sample Type (RT, RP, or SP) (See Key)	Special Sample Reason (A, B, C, D, or E) (See Key)	Replacement Sample? (Y or Blank)	Location Code (See Instructions)	Repeat Location Code (DN, UP, or OR) (See Key)	Sample Time (24 hr)	Free Chlorine (Required for all disinfectants except Chloramine)	Total Chlorine (Required when disinfectant is Chloramine)
RT			001		0630	1.21	1.27
						.	.
						.	.
						.	.
						.	.
						.	.
						.	.
						.	.
						.	.
						.	.

Analysis Information – This Section To Be Completed By Lab

Lab Sample Number	Analysis Time (24 hr)	Result (Total Coliform Count - or - TNTC - or - CNFG) (See Key)	Total Coliform (P/A)	E Coli (P/A)	Lab Sample Number of Original Sample (Required for Repeat and/or Replacement Samples) (See Instructions)
AH05839	1220		A		

The signatories of this form certify by their signatures that collection and analysis of the water sample analyzed and the resulting data hereby submitted, were completed in accordance with the provisions of 401 KAR Chapter 8, specifically including but not limited to 401 KAR 8:200, Section 1 and 401 KAR 8:040; and that the data submitted on this form is a true and accurate report of the results of collection and analysis performed pursuant to the above-referenced regulations. Violations of 401 KAR Chapter 8 are subject to severe penalties prescribed in KRS 224.99-010, up to $25,000 fine per day per violation and in some cases a violation may subject the violator to prison.

BACTERIOLOGICAL ANALYSIS REPORT FROM KEY

Sample Type:	RT = Routine (For Compliance)	RP = Repeat (For Compliance)	SP = Special (Not for Compliance)
Special Sample Reason: (Only if Sample Type = SP)	A = Suspected Contamination B = New Plant, Modification, or Line Extension	C = Treatment Modification D = Study/Investigation	E = Line Break, Emergency Repair
Repeat Location Code: (Only if Sample Type = RP)	DN = Downstream	UP = Upstream	OR = Original Site

McCoy & McCoy Laboratories, Inc.
www.mccoylabs.com

PO Box 907 * 825 Industrial Rd.
Madisonville, KY 42431
270.821.7375
270.825.9200 fax

2456 Fortune Dr., Suite 160
Lexington, KY 40509
859.299.7775
859.299.7785 fax

173 Island Creek Rd.
Pikeville, KY 41501
606.432.3104
606.432.3171 fax

1800 Kentucky Ave.
Paducah, KY 42003
270.444.6547
270.444.6572 fax

5510 Fern Valley Rd.
Suite 104 Promenade Pavilion
Louisville, KY 40228
502.961.0001

CHAIN OF CUSTODY and ANALYTICAL REQUEST

Please print legibly.

SHADED AREA FOR LAB USE ONLY

Client: CRWD #2

Phone/Email:

Bill To:

Phone/Email

Send Results to:

Phone/Email:

Compliance Monitoring (check one)? Yes ☐ No ☐

Samples Chlorinated (check one)? Yes ☐ No ☐

PO#

PWS ID#

STATE

MMLI Quote # (if applicable)

Batch#

Project Name

Collected by (Signature): RJC

Sample ID#	COLLECTION DATE	COLLECTION TIME (24 hr)	SAMPLE DESCRIPTION Composite samples indicate begin time, end time and temp (°C) at end time	SAMPLE ANALYSIS REQUESTED Method ID if known (i.e. 8260B, 6010B/7470A...)	SAMPLE REMARKS (i.e. composite, grab, field readings, corrosive...)	Field Data pH S.U.	Field Data Temp °C	# OF CONTAINERS	MATRIX CODE (See Lower Left)	PRESERVATIVE CODE (See Lower Left)
	10-28-09	0630	S01	KT						

1. Expedited services not available for all services, please call. 2. Samples received unannounced with less than 48 hours holding time remaining may be subject to additional surcharges. 3. Lab reserves the right to return unused portions of samples to client.

Relinquished by: (Signature)	Received By: (Signature)	DATE	TIME (24 hr)
[signature]	[signature]	10-28-09	0900
Relinquished by: (Signature)	Received by: (Signature)	DATE	TIME (24 hr)
Relinquished by: (Signature)	Received for MMLI by:	DATE	TIME (24 hr)

CONDITIONS UPON RECEIPT (CHECK ONE)

☐ Iced wet/Blue _____ °C Temp
☐ Ambient _____ °C Temp ☐ N/A

	YES	NO	N/A
Custody seals present/intact?	☐	☐	☐
Broken containers?	☐	☐	☐
COC agree with sample Labels?	☐	☐	☐
Correct containers for testing?	☐	☐	☐
Headspace issues acceptable?	☐	☐	☐
Holding time(s) acceptable?	☐	☐	☐
Preservative pH's acceptable?	☐	☐	☐
Was pH left unadjusted?	☐	☐	☐
All samples listed on COC received?	☐	☐	☐
Samples properly preserved?	☐	☐	☐
Client's sample documents received?	☐	☐	☐
COC been relinquished?	☐	☐	☐
Are tests listed for each sample?	☐	☐	☐

Method of Shipment (check one): UPS ☐ FedEx ☐ MMLI ☐ US Postal ☐ Client ☐

Date Shipped:
Airbill#:
Logged in by: Location:
LAB NOTES:
Follow up action required: YES ☐ NO ☐
Client informed on:
Client Rep.
By:
Reviewed by
Date

MATRIX CODES:

DW – Drinking Water
SW – Solid Waste
SO – Soil/Solid
SL – Sludge
GW – Ground Water
WW – Waste Water
OL – Oil
SU – Surface Water

PRESERVATIVE CODES:

NI – Nitric acid (HNO_3)
HA – Hydrochloric Acid (HCl)
SH – Sodium Hydroxide (NaOH)
ST – Sodium Thiosulfate
ZN – Zinc acetate
SA – Sulfuric Acid (H_2SO_4)
4C – 4°C
AA – Ascorbic Acid
NO – No preservative
SS – Sodium sulfite

SAMPLE CATEGORY = TC

KENTUCKY DIVISION OF WATER / DRINKING WATER BRANCH
BACTERIOLOGICAL ANALYSIS REPORT FORM

General Information – This Section To Be Completed By Collector

PWS ID: KY0180509

Compliance Period (MMYYYY): 102009

PWS Name: CRWD # 3

PWS Contact: Bill

Collection Date (MMDDYYYY): 10282009 (All Samples Reported on this Form were Collected on this Date.)

PWS Address: 69 Marguerite New Concord Ky 42076

PWS Phone: 270-436-6304

Collector Name: William Duncan 10-28-09 (Signature/Date)

General Information – This Section To Be Completed By Lab

Lab ID: 0301

Lab Receipt Date (MMDDYYYY): 10282009

Total Coliform Analysis Method Code: 378

Analysis Date (MMDDYYYY): 10282009

E Coli Analysis Method Code:

Lab Analyst: Mindy Martin 10/29/09 (Signature/Date)

Lab Supervisor: 10/29/09 (Signature/Date)

Sample Information – This Section To Be Completed By Collector

Sample Type (RT, RP, or SP) (See Key)	Special Sample Reason (A, B, C, D, or E) (See Key)	Replacement Sample? (Y or Blank)	Location Code (See Instructions)	Repeat Location Code (DN, UP, or OR) (See Key)	Sample Time (24 hr)	Free Chlorine (Required for all disinfectants except Chloramine)	Total Chlorine (Required when disinfectant is Chloramine)
RT			001		0600	1.37	1.45
						.	.
						.	.
						.	.
						.	.
						.	.
						.	.
						.	.
						.	.
						.	.

Analysis Information – This Section To Be Completed By Lab

Lab Sample Number	Analysis Time (24 hr)	Result (Total Coliform Count - or - TNTC - or - CNFG) (See Key)	Total Coliform (P/A)	E Coli (P/A)	Lab Sample Number of Original Sample (Required for Repeat and/or Replacement Samples) (See Instructions)
AA05842	1200		1		

The signatories of this form certify by their signatures that collection and analysis of the water sample analyzed and the resulting data hereby submitted, were completed in accordance with the provisions of 401 KAR Chapter 8, specifically including but not limited to 401 KAR 8:200, Section 1 and 401 KAR 8:040; and that the data submitted on this form is a true and accurate report of the results of collection and analysis performed pursuant to the above-referenced regulations. Violations of 401 KAR Chapter 8 are subject to severe penalties prescribed in KRS 224.99-010, up to $25,000 fine per day per violation and in some cases a violation may subject the violator to prison.

BACTERIOLOGICAL ANALYSIS REPORT FROM KEY

Sample Type:	RT = Routine (For Compliance)	RP = Repeat (For Compliance)	SP = Special (Not for Compliance)
Special Sample Reason: (Only if Sample Type = SP)	A = Suspected Contamination B = New Plant, Modification, or Line Extension	C = Treatment Modification D = Study/Investigation	E = Line Break, Emergency Repair
Repeat Location Code: (Only if Sample Type = RP)	DN = Downstream	UP = Upstream	OR = Original Site

McCoy & McCoy Laboratories, Inc.
www.mccoylabs.com

PO Box 907 * 825 Industrial Rd.
Madisonville, KY 42431
270.821.7375
270.825.9200 fax

2456 Fortune Dr., Suite 160
Lexington, KY 40509
859.299.7775
859.299.7785 fax

173 Island Creek Rd.
Pikeville, KY 41501
606.432.3104
606.432.3171 fax

1800 Kentucky Ave.
Paducah, KY 42003
270.444.6547
270.444.6572 fax

5510 Fern Valley Rd.
Suite 104 Promenade Pavilion
Louisville, KY 40228
502.961.0001

SHADED AREA FOR LAB USE ONLY

CHAIN OF CUSTODY and ANALYTICAL REQUEST

Please print legibly.

Client:	Bill To:	Send Results to:	Compliance Monitoring (check one)? Yes ☐ No ☐ / Samples Chlorinated (check one)? Yes ☐ No ☐	PO#
CRWD#3				
Phone/Email:	Phone/Email	Phone/Email:	PWS ID# / STATE	
Batch#	Project Name	Collected by (Signature): Bill	MMLI Quote # (if applicable)	

Sample ID#	COLLECTION DATE	COLLECTION TIME (24 hr)	SAMPLE DESCRIPTION Composite samples indicate begin time, end time and temp (°C) at end time	SAMPLE ANALYSIS REQUESTED Method ID if known (i.e. 8260B, 6010B/7470A...)	SAMPLE REMARKS (i.e. composite, grab, field readings, corrosive...)	Field Data pH S.U.	Field Data Temp °C	# OF CONTAINERS	MATRIX CODE (See Lower Left)	PRESERVATIVE CODE (See Lower Left)
	10-28-09	0600	OC1	SRT						

1. Expedited services not available for all services, please call. 2. Samples received unannounced with less than 48 hours holding time remaining may be subject to additional surcharges. 3. Lab reserves the right to return unused portions of samples to client.

Relinquished by: (Signature)	Received By: (Signature)	DATE	TIME (24 hr)
[signature]	[signature]	10-28-09	0600
Relinquished by: (Signature)	Received by: (Signature)	DATE	TIME (24 hr)
Relinquished by: (Signature)	Received for MMLI by:	DATE	TIME (24 hr)

MATRIX CODES:
DW – Drinking Water
SW – Solid Waste
SO – Soil/Solid
SL – Sludge
GW – Ground Water
WW – Waste Water
OL – Oil
SU – Surface Water

PRESERVATIVE CODES:
NI – Nitric acid (HNO_3)
HA – Hydrochloric Acid (HCl)
SH – Sodium Hydroxide (NaOH)
ST – Sodium Thiosulfate
ZN – Zinc acetate
SA – Sulfuric Acid (H_2SO_4)
4C – 4°C
AA – Ascorbic Acid
NO – No preservative
SS – Sodium sulfite

CONDITIONS UPON RECEIPT (CHECK ONE)
☐ Iced wet/Blue ____ °C Temp
☐ Ambient ____ °C Temp ☐ N/A

	YES	NO	N/A
Custody seals present/intact?	☐	☐	☐
Broken containers?	☐	☐	☐
COC agree with sample Labels?	☐	☐	☐
Correct containers for testing?	☐	☐	☐
Headspace issues acceptable?	☐	☐	☐
Holding time(s) acceptable?	☐	☐	☐
Preservative pH's acceptable?	☐	☐	☐
Was pH left unadjusted?	☐	☐	☐
All samples listed on COC received?	☐	☐	☐
Samples properly preserved?	☐	☐	☐
Client's sample documents received?	☐	☐	☐
COC been relinquished?	☐	☐	☐
Are tests listed for each sample?	☐	☐	☐

Method of Shipment (check one): US Postal ☐ UPS ☐ FedEx ☐ MMLI ☐ Client ☐
Date Shipped:
Airbill#:
Logged in by: ____ Location: ____
LAB NOTES ____
Follow up action required: YES ☐ NO ☐
Client informed on: ____ / ____ / ____
Client Rep: ____
By: ____
Reviewed by: ____
Date: ____ / ____ / ____

SAMPLE CATEGORY = TC

KENTUCKY DIVISION OF WATER / DRINKING WATER BRANCH
BACTERIOLOGICAL ANALYSIS REPORT FORM

General Information – This Section To Be Completed By Collector

PWS ID: KY0183106

Compliance Period (MMYYYY): 102009

PWS Name: CRWD # 4

PWS Contact: Bill

Collection Date (MMDDYYYY): 102820 09
(All Samples Reported on this Form were Collected on this Date.)

PWS Address: 69 Marguerite Rd Concord Ky 42076

PWS Phone: 270-436-6304

Collector Name: William Duncan 10-28-09
Signature/Date

General Information – This Section To Be Completed By Lab

Lab ID: 0307

Lab Receipt Date (MMDDYYYY): 10292009

Total Coliform Analysis Method Code: 028

Analysis Date (MMDDYYYY): 10281009

E Coli Analysis Method Code:

Lab Analyst: Mindy Martin 10/29/09
Signature/Date

Lab Supervisor: 10/29/09
Signature/Date

Sample Information – This Section To Be Completed By Collector

Sample Type (RT, RP, or SP) (See Key)	Special Sample Reason (A, B, C, D, or E) (See Key)	Replacement Sample? (Y or Blank)	Location Code (See Instructions)	Repeat Location Code (DN, UP, or OR) (See Key)	Sample Time (24 hr)	Free Chlorine (Required for all disinfectants except Chloramine)	Total Chlorine (Required when disinfectant is Chloramine)
RT			001		0900	1.26	1.34
						.	.
						.	.
						.	.
						.	.
						.	.
						.	.
						.	.
						.	.
						.	.

Analysis Information – This Section To Be Completed By Lab

Lab Sample Number	Analysis Time (24 hr)	Result (Total Coliform Count - or - TNTC - or - CNFG) (See Key)	Total Coliform (P/A)	E Coli (P/A)	Lab Sample Number of Original Sample (Required for Repeat and/or Replacement Samples) (See Instructions)
AH05547	1200		A		

The signatories of this form certify by their signatures that collection and analysis of the water sample analyzed and the resulting data hereby submitted, were completed in accordance with the provisions of 401 KAR Chapter 8, specifically including but not limited to 401 KAR 8:200, Section 1 and 401 KAR 8:040; and that the data submitted on this form is a true and accurate report of the results of collection and analysis performed pursuant to the above-referenced regulations. Violations of 401 KAR Chapter 8 are subject to severe penalties prescribed in KRS 224.99-010, up to $25,000 fine per day per violation and in some cases a violation may subject the violator to prison.

BACTERIOLOGICAL ANALYSIS REPORT FROM KEY

Sample Type:	RT = Routine (For Compliance)	RP = Repeat (For Compliance)	SP = Special (Not for Compliance)
Special Sample Reason: (Only If Sample Type = SP)	A = Suspected Contamination B = New Plant, Modification, or Line Extension	C = Treatment Modification D = Study/Investigation	E = Line Break, Emergency Repair
Repeat Location Code:	DN = Downstream	UP = Upstream	OR = Original Site

McCoy & McCoy Laboratories, Inc.
www.mccoylabs.com

PO Box 907 * 825 Industrial Rd.
Madisonville, KY 42431
270.821.7375
270.825.9200 fax

2456 Fortune Dr., Suite 160
Lexington, KY 40509
859.299.7775
859.299.7785 fax

173 Island Creek Rd.
Pikeville, KY 41501
606.432.3104
606.432.3171 fax

1800 Kentucky Ave.
Paducah, KY 42003
270.444.6547
270.444.6572 fax

5510 Fern Valley Rd.
Suite 104 Promenade Pavilion
Louisville, KY 40228
502.961.0001

CHAIN OF CUSTODY and ANALYTICAL REQUEST

Please print legibly

SHADED AREA FOR LAB USE ONLY

Client: CKWS #4

Phone/Email:

Bill To:

Phone/Email

Send Results to:

Phone/Email:

Compliance Monitoring (check one)? Yes ☐ No ☐

Samples Chlorinated (check one)? Yes ☐ No ☐

PWS ID#

STATE

PO#

Batch#

Project Name

Collected by (Signature):

MMLI Quote # (if applicable)

Sample ID#	COLLECTION DATE	COLLECTION TIME (24 hr)	SAMPLE DESCRIPTION Composite samples indicate begin time, end time and temp (°C) at end time	SAMPLE ANALYSIS REQUESTED Method ID if known (i.e. 8260B, 6010B/7470A...)	SAMPLE REMARKS (i.e. composite, grab, field readings, corrosive...)	Field Data pH S.U.	Field Data Temp °C	# OF CONTAINERS	MATRIX CODE (See Lower Left)	PRESERVATIVE CODE (See Lower Left)

1. Expedited services not available for all services, please call. 2. Samples received unannounced with less than 48 hours holding time remaining may be subject to additional surcharges. 3. Lab reserves the right to return unused portions of samples to client.

Relinquished by: (Signature)	Received By: (Signature)	DATE	TIME (24 hr)
Relinquished by: (Signature)	Received by: (Signature)	DATE	TIME (24 hr)
Relinquished by: (Signature)	Received for MMLI by:	DATE	TIME (24 hr)

CONDITIONS UPON RECEIPT (CHECK ONE)

☐ Iced wet/Blue ____ °C Temp
☐ Ambient ____ °C Temp ☐ N/A

	YES	NO	N/A
Custody seals present/intact?	☐	☐	☐
Broken containers?	☐	☐	☐
COC agree with sample Labels?	☐	☐	☐
Correct containers for testing?	☐	☐	☐
Headspace issues acceptable?	☐	☐	☐
Holding time(s) acceptable?	☐	☐	☐
Preservative pH's acceptable?	☐	☐	☐
Was pH left unadjusted?	☐	☐	☐
All samples listed on COC received?	☐	☐	☐
Samples properly preserved?	☐	☐	☐
Client's sample documents received?	☐	☐	☐
COC been relinquished?	☐	☐	☐
Are tests listed for each sample?	☐	☐	☐

Method of Shipment (check one): UPS ☐ FedEx ☐ MMLI ☐ US Postal ☐ Client ☐

Date Shipped:
Airbill:

Logged in by: ____ Location:

LAB NOTES

Follow up action required: YES ☐ NO ☐

Client Informed on:

Client Rep:

By:

Reviewed by:

Date:

MATRIX CODES:

DW – Drinking Water
SW – Solid Waste
SO – Soil/Solid
SL – Sludge
GW – Ground Water
WW – Waste Water
OL – Oil
SU – Surface Water

PRESERVATIVE CODES:

NI – Nitric acid (HNO_3)
HA – Hydrochloric Acid (HCl)
SH – Sodium Hydroxide (NaOH)
ST – Sodium Thiosulfate
ZN – Zinc acetate
SA – Sulfuric Acid (H_2SO_4)
4C – 4°C
AA – Ascorbic Acid
NO – No preservative
SS – Sodium sulfite

SAMPLE CATEGORY = TC

KENTUCKY DIVISION OF WATER / DRINKING WATER BRANCH
BACTERIOLOGICAL ANALYSIS REPORT FORM

General Information – This Section To Be Completed By Collector

PWS ID: KY0180549

Compliance Period (MMYYYY): 112009

PWS Name: CRWD # 1

PWS Contact: Bill

Collection Date (MMDDYYYY): 11112009 (All Samples Reported on this Form were Collected on this Date.)

PWS Address: 69 Marguerite New Concord Ky 42076

PWS Phone: 270-436-6304

Collector Name: William Duncan 11-11-09 (Signature/Date)

General Information – This Section To Be Completed By Lab

Lab ID: 00001

Lab Receipt Date (MMDDYYYY): 11112009

Total Coliform Analysis Method Code: 028

Analysis Date (MMDDYYYY): 11112009

E Coli Analysis Method Code:

Lab Analyst: Mindy Martin 11/12/09 (Signature/Date)

Lab Supervisor: 11/12/09 (Signature/Date)

Sample Information – This Section To Be Completed By Collector

Sample Type (RT, RP, or SP) (See Key)	Special Sample Reason (A, B, C, D, or E) (See Key)	Replacement Sample? (Y or Blank)	Location Code (See Instructions)	Repeat Location Code (DN, UP, or OR) (See Key)	Sample Time (24 hr)	Free Chlorine (Required for all disinfectants except Chloramine)	Total Chlorine (Required when disinfectant is Chloramine)
RT			009		0730	1.15	1.21

Analysis Information – This Section To Be Completed By Lab

Lab Sample Number	Analysis Time (24 hr)	Result (Total Coliform Count - or - TNTC - or - CNFG) (See Key)	Total Coliform (P/A)	E Coli (P/A)	Lab Sample Number of Original Sample (Required for Repeat and/or Replacement Samples) (See Instructions)
A408764	1630		A		

The signatories of this form certify by their signatures that collection and analysis of the water sample analyzed and the resulting data hereby submitted, were completed in accordance with the provisions of 401 KAR Chapter 8, specifically including but not limited to 401 KAR 8:200, Section 1 and 401 KAR 8:040; and that the data submitted on this form is a true and accurate report of the results of collection and analysis performed pursuant to the above-referenced regulations. Violations of 401 KAR Chapter 8 are subject to severe penalties prescribed in KRS 224.99-010, up to $25,000 fine per day per violation and in some cases a violation may subject the violator to prison.

BACTERIOLOGICAL ANALYSIS REPORT FROM KEY

Sample Type:	RT = Routine (For Compliance)	RP = Repeat (For Compliance)	SP = Special (Not for Compliance)
Special Sample Reason: (Only If Sample Type = SP)	A = Suspected Contamination B = New Plant, Modification, or Line Extension	C = Treatment Modification D = Study/Investigation	E = Line Break, Emergency Repair
Repeat Location Code: (Only If Sample Type = RP)	DN = Downstream	UP = Upstream	OR = Original Site

McCoy & McCoy Laboratories, Inc.
www.mccoylabs.com

PO Box 907 * 825 Industrial Rd.
Madisonville, KY 42431
270.821.7375
270.825.9200 fax

2456 Fortune Dr., Suite 160
Lexington, KY 40509
859.299.7775
859.299.7785 fax

173 Island Creek Rd.
Pikeville, KY 41501
606.432.3104
606.432.3171 fax

1800 Kentucky Ave.
Paducah, KY 42003
270.444.6547
270.444.6572 fax

5510 Fern Valley Rd.
Suite 104 Promenade Pavilion
Louisville, KY 40228
502.961.0001

SHADED AREA FOR LAB USE ONLY

CHAIN OF CUSTODY and ANALYTICAL REQUEST

Please print legibly.

Client: CRUD #1	Bill To:	Send Results to:	Compliance Monitoring (check one)? Yes ☐ No ☐ Samples Chlorinated (check one)? Yes ☐ No ☐	PO#
Phone/Email:	Phone/Email	Phone/Email:	PWS ID# / STATE	
Batch#	Project Name	Collected by (Signature):	MMLI Quote # (if applicable)	

Sample ID#	COLLECTION DATE	COLLECTION TIME (24 hr)	SAMPLE DESCRIPTION Composite samples indicate begin time, end time and temp (°C) at end time	SAMPLE ANALYSIS REQUESTED Method ID if known (i.e. 8260B, 6010B/7470A...)	SAMPLE REMARKS (i.e. composite, grab, field readings, corrosive...)	Field Data pH S.U.	Field Data Temp °C	# OF CONTAINERS	MATRIX CODE (See Lower Left)	PRESERVATIVE CODE (See Lower Left)
	11-11-09	0730	802	RT						

1. Expedited services not available for all services, please call. 2. Samples received unannounced with less than 48 hours holding time remaining may be subject to additional surcharges. 3. Lab reserves the right to return unused portions of samples to client.

Relinquished by: (Signature)	Received By: (Signature)	DATE	TIME (24 hr)
[signature]	[signature]	11-11-09	0800
Relinquished by: (Signature)	Received by: (Signature)	DATE	TIME (24 hr)
Relinquished by: (Signature)	Received for MMLI by:	DATE	TIME (24 hr)

MATRIX CODES:
DW – Drinking Water
SW – Solid Waste
SO – Soil/Solid
SL – Sludge
GW – Ground Water
WW – Waste Water
OL – Oil
SU – Surface Water

PRESERVATIVE CODES:
NI – Nitric acid (HNO_3)
HA – Hydrochloric Acid (HCl)
SH – Sodium Hydroxide (NaOH)
ST – Sodium Thiosulfate
ZN – Zinc acetate
SA – Sulfuric Acid (H_2SO_4)
4C – 4°C
AA – Ascorbic Acid
NO – No preservative
SS – Sodium sulfite

CONDITIONS UPON RECEIPT (CHECK ONE)
☐ Iced wet/Blue ____ °C Temp
☐ Ambient ____ °C Temp ☐ N/A

	YES	NO	N/A
Custody seals present/intact?	☐	☐	☐
Broken containers?	☐	☐	☐
COC agree with sample Labels?	☐	☐	☐
Correct containers for testing?	☐	☐	☐
Headspace issues acceptable?	☐	☐	☐
Holding time(s) acceptable?	☐	☐	☐
Preservative pH's acceptable?	☐	☐	☐
Was pH left unadjusted?	☐	☐	☐
All samples listed on COC received?	☐	☐	☐
Samples properly preserved?	☐	☐	☐
Client's sample documents received?	☐	☐	☐
COC been relinquished?	☐	☐	☐
Are tests listed for each sample?	☐	☐	☐

Method of Shipment (check one): US Postal ☐ UPS ☐ FedEx ☐ MMLI ☐ Client ☐
Date Shipped:
Airbill#:
Logged in by: Location:
LAB NOTES:
Follow up action required YES ☐ NO ☐
Client informed on:
Client Rep:
By:
Reviewed by:
Date:

SAMPLE CATEGORY = TC

KENTUCKY DIVISION OF WATER / DRINKING WATER BRANCH
BACTERIOLOGICAL ANALYSIS REPORT FORM

General Information – This Section To Be Completed By Collector

PWS ID: KY0180509

Compliance Period (MMYYYY): 112009

PWS Name: CRWD #2

PWS Contact: Bill

Collection Date (MMDDYYYY): 11112009
(All Samples Reported on this Form were Collected on this Date.)

PWS Address: 69 Marguerite New Concord Ky 42076

PWS Phone: 270-436-6304

Collector Name: William Duncan 11-11-09
Signature/Date

General Information – This Section To Be Completed By Lab

Lab ID: 00037

Lab Receipt Date (MMDDYYYY): 11112009

Total Coliform Analysis Method Code: 97

Analysis Date (MMDDYYYY): 11112009

E Coli Analysis Method Code:

Lab Analyst: Mindy Martin 11/12/09
Signature/Date

Lab Supervisor: 11/12/09
Signature/Date

Sample Information – This Section To Be Completed By Collector / Analysis Information – This Section To Be Completed By Lab

Sample Type (RT, RP, or SP) (See Key)	Special Sample Reason (A, B, C, D, or E) (See Key)	Replacement Sample? (Y or Blank)	Location Code (See Instructions)	Repeat Location Code (DN, UP, or OR) (See Key)	Sample Time (24 hr)	Free Chlorine (Required for all disinfectants except Chloramine)	Total Chlorine (Required when disinfectant is Chloramine)	Lab Sample Number	Analysis Time (24 hr)	Result (Total Coliform Count - or - TNTC - or - CNFG) (See Key)	Total Coliform (P/A)	E Coli (P/A)	Lab Sample Number of Original Sample (Required for Repeat and/or Replacement Samples) (See Instructions)
RT			002		0630	1.31	1.29	A708765	1630		A		

The signatories of this form certify by their signatures that collection and analysis of the water sample analyzed and the resulting data hereby submitted, were completed in accordance with the provisions of 401 KAR Chapter 8, specifically including but not limited to 401 KAR 8:200, Section 1 and 401 KAR 8:040; and that the data submitted on this form is a true and accurate report of the results of collection and analysis performed pursuant to the above-referenced regulations. Violations of 401 KAR Chapter 8 are subject to severe penalties prescribed in KRS 224.99-010, up to $25,000 fine per day per violation and in some cases a violation may subject the violator to prison.

BACTERIOLOGICAL ANALYSIS REPORT FROM KEY

Sample Type:	RT = Routine (For Compliance)	RP = Repeat (For Compliance)	SP = Special (Not for Compliance)
Special Sample Reason: (Only If Sample Type = SP)	A = Suspected Contamination B = New Plant, Modification, or Line Extension	C = Treatment Modification D = Study/Investigation	E = Line Break, Emergency Repair
Repeat Location Code: (Only If Sample Type = RP)	DN = Downstream	UP = Upstream	OR = Original Site

McCoy & McCoy Laboratories, Inc.
www.mccoylabs.com

PO Box 907 * 825 Industrial Rd.
Madisonville, KY 42431
270.821.7375
270.825.9200 fax

2456 Fortune Dr., Suite 160
Lexington, KY 40509
859.299.7775
859.299.7785 fax

173 Island Creek Rd.
Pikeville, KY 41501
606.432.3104
606.432.3171 fax

1800 Kentucky Ave.
Paducah, KY 42003
270.444.6547
270.444.6572 fax

5510 Fern Valley Rd.
Suite 104 Promenade Pavilion
Louisville, KY 40228
502.961.0001

CHAIN OF CUSTODY and ANALYTICAL REQUEST

Please print legibly

SHADED AREA FOR LAB USE ONLY

Client: CRWD #2	Bill To:	Send Results to:	Compliance Monitoring (check one)? Yes ☐ No ☐ Samples Chlorinated (check one)? Yes ☐ No ☐	PO#
Phone/Email:	Phone/Email	Phone/Email:	PWS ID# / STATE	
Batch#	Project Name	Collected by (Signature): Rik	MMLI Quote # (if applicable)	

Sample ID#	COLLECTION DATE	TIME (24 hr)	SAMPLE DESCRIPTION Composite samples indicate begin time, end time and temp (°C) at end time	SAMPLE ANALYSIS REQUESTED Method ID if known (i.e. 8260B, 6010B/7470A...)	SAMPLE REMARKS (i.e. composite, grab, field readings, corrosive...)	Field Data pH S.U.	Field Data Temp °C	# OF CONTAINERS	MATRIX CODE (See Lower Left)	PRESERVATIVE CODE (See Lower Left)
	11-1-09	0630	002	R7						

1. Expedited services not available for all services, please call. 2. Samples received unannounced with less than 48 hours holding time remaining may be subject to additional surcharges. 3. Lab reserves the right to return unused portions of samples to client.

Relinquished by: (Signature)	Received By: (Signature)	DATE	TIME (24 hr)
[illegible]	[illegible]	11-1-09	0900
Relinquished by: (Signature)	Received by: (Signature)	DATE	TIME (24 hr)
Relinquished by: (Signature)	Received for MMLI by:	DATE	TIME (24 hr)

CONDITIONS UPON RECEIPT (CHECK ONE)
☐ Iced wet/Blue ____ °C Temp
☐ Ambient ____ °C Temp ☐ N/A

	YES	NO	N/A
Custody seals present/intact?	☐	☐	☐
Broken containers?	☐	☐	☐
COC agree with sample Labels?	☐	☐	☐
Correct containers for testing?	☐	☐	☐
Headspace issues acceptable?	☐	☐	☐
Holding time(s) acceptable?	☐	☐	☐
Preservative pH's acceptable?	☐	☐	☐
Was pH left unadjusted?	☐	☐	☐
All samples listed on COC received?	☐	☐	☐
Samples properly preserved?	☐	☐	☐
Client's sample documents received?	☐	☐	☐
COC been relinquished?	☐	☐	☐
Are tests listed for each sample?	☐	☐	☐

Method of Shipment (check one): US Postal ☐ UPS ☐ FedEx ☐ MMLI ☐ Client ☐
Date Shipped:
Airbill#:
Logged in by: Location:
LAB NOTES:
Follow up action required YES ☐ NO ☐
Client informed on
Client Rep:
By:
Reviewed by:
Date:

MATRIX CODES:
DW – Drinking Water
SW – Solid Waste
SO – Soil/Solid
SL – Sludge
GW – Ground Water
WW – Waste Water
OL – Oil
SU – Surface Water

PRESERVATIVE CODES:
NI – Nitric acid (HNO_3)
HA – Hydrochloric Acid (HCl)
SH – Sodium Hydroxide (NaOH)
ST – Sodium Thiosulfate
ZN – Zinc acetate
SA – Sulfuric Acid (H_2SO_4)
4C – 4°C
AA – Ascorbic Acid
NO – No preservative
SS – Sodium sulfite

SAMPLE CATEGORY = TC

KENTUCKY DIVISION OF WATER / DRINKING WATER BRANCH
BACTERIOLOGICAL ANALYSIS REPORT FORM

General Information – This Section To Be Completed By Collector

PWS ID: KY0180502

Compliance Period (MMYYYY): 118009

PWS Name: CRWD # 3

PWS Contact: Bill

Collection Date (MMDDYYYY): 11112009
(All Samples Reported on this Form were Collected on this Date.)

PWS Address: 69 Marguerite New Concord Ky 42076

PWS Phone: 270-436-6304

Collector Name: William Duncan 11-11-09
Signature/Date

General Information – This Section To Be Completed By Lab

Lab ID: 00007

Lab Receipt Date (MMDDYYYY): 11112009

Total Coliform Analysis Method Code: 020

Analysis Date (MMDDYYYY): 11112009

E Coli Analysis Method Code:

Lab Analyst: Mindy Martin 11/12/09
Signature/Date

Lab Supervisor: 11/12/09
Signature/Date

Sample Information – This Section To Be Completed By Collector

Sample Type (RT, RP, or SP) (See Key)	Special Sample Reason (A, B, C, D, or E) (See Key)	Replacement Sample? (Y or Blank)	Location Code (See Instructions)	Repeat Location Code (DN, UP, or OR) (See Key)	Sample Time (24 hr)	Free Chlorine (Required for all disinfectants except Chloramine)	Total Chlorine (Required when disinfectant is Chloramine)
RT			002		0600	1.08	1.15

Analysis Information – This Section To Be Completed By Lab

Lab Sample Number	Analysis Time (24 hr)	Result (Total Coliform Count - or - TNTC - or - CNFG) (See Key)	Total Coliform (P/A)	E Coli (P/A)	Lab Sample Number of Original Sample (Required for Repeat and/or Replacement Samples) (See Instructions)
AA08275	1630		A		

The signatories of this form certify by their signatures that collection and analysis of the water sample analyzed and the resulting data hereby submitted, were completed in accordance with the provisions of 401 KAR Chapter 8, specifically including but not limited to 401 KAR 8:200, Section 1 and 401 KAR 8:040; and that the data submitted on this form is a true and accurate report of the results of collection and analysis performed pursuant to the above-referenced regulations. Violations of 401 KAR Chapter 8 are subject to severe penalties prescribed in KRS 224.99-010, up to $25,000 fine per day per violation and in some cases a violation may subject the violator to prison.

BACTERIOLOGICAL ANALYSIS REPORT FROM KEY

Sample Type:	RT = Routine (For Compliance)	RP = Repeat (For Compliance)	SP = Special (Not for Compliance)
Special Sample Reason: (Only If Sample Type = SP)	A = Suspected Contamination B = New Plant, Modification, or Line Extension	C = Treatment Modification D = Study/Investigation	E = Line Break, Emergency Repair
Repeat Location Code: (Only If Sample Type = RP)	DN = Downstream	UP = Upstream	OR = Original Site

McCoy & McCoy Laboratories, Inc.
www.mccoylabs.com

PO Box 907 * 825 Industrial Rd.
Madisonville, KY 42431
270.821.7375
270.825.9200 fax

2456 Fortune Dr., Suite 160
Lexington, KY 40509
859.299.7775
859.299.7785 fax

173 Island Creek Rd.
Pikeville, KY 41501
606.432.3104
606.432.3171 fax

1800 Kentucky Ave.
Paducah, KY 42003
270.444.6547
270.444.6572 fax

5510 Fern Valley Rd.
Suite 104 Promenade Pavilion
Louisville, KY 40228
502.961.0001

SHADED AREA FOR LAB USE ONLY

CHAIN OF CUSTODY and ANALYTICAL REQUEST

Please print legibly.

Client:	Bill To:	Send Results to:	Compliance Monitoring (check one)? Yes ☐ No ☐ / Samples Chlorinated (check one)? Yes ☐ No ☐	PO#
CRWD#3				
Phone/Email:	Phone/Email	Phone/Email:	PWS ID# / STATE	
Batch#	Project Name	Collected by (Signature): Bill	MMLI Quote # (if applicable)	

Sample ID#	COLLECTION DATE	COLLECTION TIME (24 hr)	SAMPLE DESCRIPTION Composite samples indicate begin time, end time and temp (°C) at end time	SAMPLE ANALYSIS REQUESTED Method ID if known (i.e. 8260B, 6010B/7470A...)	SAMPLE REMARKS (i.e. composite, grab, field readings, corrosive...)	Field Data pH S.U.	Field Data Temp °C	# OF CONTAINERS	MATRIX CODE (See Lower Left)	PRESERVATIVE CODE (See Lower Left)
	11-11-09	0600	002	RT						

1. Expedited services not available for all services, please call. 2. Samples received unannounced with less than 48 hours holding time remaining may be subject to additional surcharges. 3. Lab reserves the right to return unused portions of samples to client.

Relinquished by: (Signature)	Received By: (Signature)	DATE	TIME (24 hr)
[signature]	[signature]	11-11-09	0700
Relinquished by: (Signature)	Received by: (Signature)	DATE	TIME (24 hr)
Relinquished by: (Signature)	Received for MMLI by:	DATE	TIME (24 hr)

MATRIX CODES:
DW – Drinking Water
SW – Solid Waste
SO – Soil/Solid
SL – Sludge
GW – Ground Water
WW – Waste Water
OL – Oil
SU – Surface Water

PRESERVATIVE CODES:
NI – Nitric acid (HNO_3)
HA – Hydrochloric Acid (HCl)
SH – Sodium Hydroxide (NaOH)
ST – Sodium Thiosulfate
ZN – Zinc acetate
SA – Sulfuric Acid (H_2SO_4)
4C – 4°C
AA – Ascorbic Acid
NO – No preservative
SS – Sodium sulfite

CONDITIONS UPON RECEIPT (CHECK ONE)
☐ Iced wet/Blue ____ °C Temp
☐ Ambient ____ °C Temp ☐ N/A

	YES	NO	N/A
Custody seals present/intact?	☐	☐	☐
Broken containers?	☐	☐	☐
COC agree with sample Labels?	☐	☐	☐
Correct containers for testing?	☐	☐	☐
Headspace issues acceptable?	☐	☐	☐
Holding time(s) acceptable?	☐	☐	☐
Preservative pH's acceptable?	☐	☐	☐
Was pH left unadjusted?	☐	☐	☐
All samples listed on COC received?	☐	☐	☐
Samples properly preserved?	☐	☐	☐
Client's sample documents received?	☐	☐	☐
COC been relinquished?	☐	☐	☐
Are tests listed for each sample?	☐	☐	☐

Method of Shipment (check one): US Postal ☐ UPS ☐ FedEx ☐ MMLI ☐ Client ☐
Date Shipped:
Airbill#:
Logged in by: ____ Location: ____
LAB NOTES: ____
Follow up action required: YES ☐ NO ☐
Client informed on: ____/____/____
Client Rep: ____
By: ____
Reviewed by: ____
Date: ____/____/____

SAMPLE CATEGORY = TC

KENTUCKY DIVISION OF WATER / DRINKING WATER BRANCH
BACTERIOLOGICAL ANALYSIS REPORT FORM

General Information -- This Section To Be Completed By Collector

PWS ID: KY0183106

Compliance Period (MMYYYY): 112009

PWS Name: CRWD # 4

PWS Contact: Bill

Collection Date (MMDDYYYY): 11 11 2009
(All Samples Reported on this Form were Collected on this Date.)

PWS Address: 69 Marguerite Ln Concord Ky 42076

PWS Phone: 270-436-6304

Collector Name: William Duncan 11-11-09
Signature/Date

General Information -- This Section To Be Completed By Lab

Lab ID: 00051

Lab Receipt Date (MMDDYYYY): 11 11 2009

Total Coliform Analysis Method Code: 078

Analysis Date (MMDDYYYY): 11 11 2009

E Coli Analysis Method Code:

Lab Analyst: Mindy Martin 11/12/09
Signature/Date

Lab Supervisor: [signature] 11/12/09
Signature/Date

Sample Information -- This Section To Be Completed By Collector

Sample Type (RT, RP, or SP) (See Key)	Special Sample Reason (A, B, C, D, or E) (See Key)	Replacement Sample? (Y or Blank)	Location Code (See Instructions)	Repeat Location Code (DN, UP, or OR) (See Key)	Sample Time (24 hr)	Free Chlorine (Required for all disinfectants except Chloramine)	Total Chlorine (Required when disinfectant is Chloramine)
RT			003		0800	1.22	1.29
						.	.
						.	.
						.	.
						.	.
						.	.
						.	.
						.	.
						.	.
						.	.

Analysis Information -- This Section To Be Completed By Lab

Lab Sample Number	Analysis Time (24 hr)	Result (Total Coliform Count - or - TNTC - or - CNFG) (See Key)	Total Coliform (P/A)	E Coli (P/A)	Lab Sample Number of Original Sample (Required for Repeat and/or Replacement Samples) (See Instructions)
AH087776	1630		A		

The signatories of this form certify by their signatures that collection and analysis of the water sample analyzed and the resulting data hereby submitted, were completed in accordance with the provisions of 401 KAR Chapter 8, specifically including but not limited to 401 KAR 8:200, Section 1 and 401 KAR 8:040; and that the data submitted on this form is a true and accurate report of the results of collection and analysis performed pursuant to the above-referenced regulations. Violations of 401 KAR Chapter 8 are subject to severe penalties prescribed in KRS 224.99-010, up to $25,000 fine per day per violation and in some cases a violation may subject the violator to prison.

BACTERIOLOGICAL ANALYSIS REPORT FROM KEY

Sample Type:	RT = Routine (For Compliance)	RP = Repeat (For Compliance)	SP = Special (Not for Compliance)
Special Sample Reason: (Only if Sample Type = SP)	A = Suspected Contamination B = New Plant, Modification, or Line Extension	C = Treatment Modification D = Study/Investigation	E = Line Break, Emergency Repair
Repeat Location Code:	DN = Downstream	UP = Upstream	OR = Original Site

McCoy & McCoy Laboratories, Inc.
www.mccoylabs.com

PO Box 907 * 825 Industrial Rd.
Madisonville, KY 42431
270.821.7375
270.825.9200 fax

2456 Fortune Dr., Suite 160
Lexington, KY 40509
859.299.7775
859.299.7785 fax

173 Island Creek Rd.
Pikeville, KY 41501
606.432.3104
606.432.3171 fax

1800 Kentucky Ave.
Paducah, KY 42003
270.444.6547
270.444.6572 fax

5510 Fern Valley Rd.
Suite 104 Promenade Pavilion
Louisville, KY 40228
502.961.0001

SHADED AREA FOR LAB USE ONLY

CHAIN OF CUSTODY and ANALYTICAL REQUEST

Please print legibly.

Client:	Bill To:	Send Results to:	Compliance Monitoring (check one)? Yes ☐ No ☐	PO#
CRWD#4			Samples Chlorinated (check one)? Yes ☐ No ☐	
Phone/Email:	Phone/Email	Phone/Email:	PWS ID# / STATE	
Batch#	Project Name	Collected by (Signature): R.W.	MMLI Quote # (if applicable)	

Sample ID#	COLLECTION DATE	COLLECTION TIME (24 hr)	SAMPLE DESCRIPTION Composite samples indicate begin time, end time and temp (°C) at end time	SAMPLE ANALYSIS REQUESTED Method ID if known (i.e. 8260B, 6010B/7470A...)	SAMPLE REMARKS (i.e. composite, grab, field readings, corrosive...)	Field Data pH S.U.	Field Data Temp °C	# OF CONTAINERS	MATRIX CODE (See Lower Left)	PRESERVATIVE CODE (See Lower Left)
	11-11-09	0800	003	RT						

1. Expedited services not available for all services, please call. 2. Samples received unannounced with less than 48 hours holding time remaining may be subject to additional surcharges. 3. Lab reserves the right to return unused portions of samples to client.

Relinquished by: (Signature)	Received By: (Signature)	DATE	TIME (24 hr)
[signature]	[signature]	11-11-09	0900
Relinquished by: (Signature)	Received by: (Signature)	DATE	TIME (24 hr)
Relinquished by: (Signature)	Received for MMLI by:	DATE	TIME (24 hr)

MATRIX CODES:
DW – Drinking Water
SW – Solid Waste
SO – Soil/Solid
SL – Sludge
GW – Ground Water
WW – Waste Water
OL – Oil
SU – Surface Water

PRESERVATIVE CODES:
NI – Nitric acid (HNO_3)
HA – Hydrochloric Acid (HCl)
SH – Sodium Hydroxide (NaOH)
ST – Sodium Thiosulfate
ZN – Zinc acetate
SA – Sulfuric Acid (H_2SO_4)
4C – 4°C
AA – Ascorbic Acid
NO – No preservative
SS – Sodium sulfite

CONDITIONS UPON RECEIPT (CHECK ONE)
☐ Iced wet/Blue °C Temp
☐ Ambient °C Temp ☐ N/A

	YES	NO	N/A
Custody seals present/intact?	☐	☐	☐
Broken containers?	☐	☐	☐
COC agree with sample Labels?	☐	☐	☐
Correct containers for testing?	☐	☐	☐
Headspace issues acceptable?	☐	☐	☐
Holding time(s) acceptable?	☐	☐	☐
Preservative pH's acceptable?	☐	☐	☐
Was pH left unadjusted?	☐	☐	☐
All samples listed on COC received?	☐	☐	☐
Samples properly preserved?	☐	☐	☐
Client's sample documents received?	☐	☐	☐
COC been relinquished?	☐	☐	☐
Are tests listed for each sample?	☐	☐	☐

Method of Shipment (check one): UPS ☐ FedEx ☐ MMLI ☐ US Postal ☐ Client ☐
Date Shipped:
Airbill#:
Logged in by: Location:
LAB NOTES:
Follow up action required: YES ☐ NO ☐
Client informed on: / /
Client Rep:
By:
Reviewed by:
Date: / /

SAMPLE CATEGORY = TC

KENTUCKY DIVISION OF WATER / DRINKING WATER BRANCH
BACTERIOLOGICAL ANALYSIS REPORT FORM

General Information – This Section To Be Completed By Collector

PWS ID: KY0180549

Compliance Period (MMYYYY): 112009

PWS Name: CRWD # 1

PWS Contact: Bill

Collection Date (MMDDYYYY): 112420 09
(All Samples Reported on this Form were Collected on this Date.)

PWS Address: 69 Marguerite New Concord Ky 42076

PWS Phone: 270-436-6304

Collector Name: William Duncan 11-24-09
Signature/Date

General Information – This Section To Be Completed By Lab

Lab ID: 00031

Lab Receipt Date (MMDDYYYY): 11242009

Total Coliform Analysis Method Code: 328

Analysis Date (MMDDYYYY): 11242009

E Coli Analysis Method Code:

Lab Analyst: Mindy Martin 11/25/09
Signature/Date

Lab Supervisor: 11/25/09
Signature/Date

Sample Information – This Section To Be Completed By Collector / Analysis Information – This Section To Be Completed By Lab

Sample Type (RT, RP, or SP) (See Key)	Special Sample Reason (A, B, C, D, or E) (See Key)	Replacement Sample? (Y or Blank)	Location Code (See Instructions)	Repeat Location Code (DN, UP, or OR) (See Key)	Sample Time (24 hr)	Free Chlorine (Required for all disinfectants except Chloramine)	Total Chlorine (Required when disinfectant is Chloramine)	Lab Sample Number	Analysis Time (24 hr)	Result (Total Coliform Count - or - TNTC - or - CNFG) (See Key)	Total Coliform (P/A)	E Coli (P/A)	Lab Sample Number of Original Sample (Required for Repeat and/or Replacement Samples) (See Instructions)
RT			003		0730	1.31	1.38	AH1275	1020		A		

The signatories of this form certify by their signatures that collection and analysis of the water sample analyzed and the resulting data hereby submitted, were completed in accordance with the provisions of 401 KAR Chapter 8, specifically including but not limited to 401 KAR 8:200, Section 1 and 401 KAR 8:040; and that the data submitted on this form is a true and accurate report of the results of collection and analysis performed pursuant to the above-referenced regulations. Violations of 401 KAR Chapter 8 are subject to severe penalties prescribed in KRS 224.99-010, up to $25,000 fine per day per violation and in some cases a violation may subject the violator to prison.

BACTERIOLOGICAL ANALYSIS REPORT FROM KEY

Sample Type:	RT = Routine (For Compliance)	RP = Repeat (For Compliance)	SP = Special (Not for Compliance)
Special Sample Reason: (Only if Sample Type = SP)	A = Suspected Contamination B = New Plant, Modification, or Line Extension	C = Treatment Modification D = Study/Investigation	E = Line Break, Emergency Repair
Repeat Location Code:	DN = Downstream	UP = Upstream	OR = Original Site

McCoy & McCoy Laboratories, Inc.
www.mccoylabs.com

PO Box 907 * 825 Industrial Rd.
Madisonville, KY 42431
270.821.7375
270.825.9200 fax

2456 Fortune Dr., Suite 160
Lexington, KY 40509
859.299.7775
859.299.7785 fax

173 Island Creek Rd.
Pikeville, KY 41501
606.432.3104
606.432.3171 fax

1800 Kentucky Ave.
Paducah, KY 42003
270.444.6547
270.444.6572 fax

5510 Fern Valley Rd.
Suite 104 Promenade Pavilion
Louisville, KY 40228
502.961.0001

SHADED AREA FOR LAB USE ONLY

CHAIN OF CUSTODY and ANALYTICAL REQUEST

Please print legibly

Client: CRWD # 1	Bill To:	Send Results to:	Compliance Monitoring (check one)? Yes ☐ No ☐ Samples Chlorinated (check one)? Yes ☐ No ☐	PO#
Phone/Email:	Phone/Email	Phone/Email:	PWS ID# / STATE	
Batch#	Project Name	Collected by (Signature): RW	MMLI Quote # (if applicable)	

Sample ID#	COLLECTION DATE	COLLECTION TIME (24 hr)	SAMPLE DESCRIPTION Composite samples indicate begin time, end time and temp (°C) at end time	SAMPLE ANALYSIS REQUESTED Method ID if known (i.e. 8260B, 6010B/7470A...)	SAMPLE REMARKS (i.e. composite, grab, field readings, corrosive...)	Field Data pH S.U.	Field Data Temp °C	# OF CONTAINERS	MATRIX CODE (See Lower Left)	PRESERVATIVE CODE (See Lower Left)
	[illegible]	[illegible]	003	RP						

1. Expedited services not available for all services, please call. 2. Samples received unannounced with less than 48 hours holding time remaining may be subject to additional surcharges. 3. Lab reserves the right to return unused portions of samples to client.

Relinquished by: (Signature)	Received By: (Signature)	DATE	TIME (24 hr)
[illegible]	[illegible]	[illegible]	[illegible]
Relinquished by: (Signature)	Received by: (Signature)	DATE	TIME (24 hr)
Relinquished by: (Signature)	Received for MMLI by:	DATE	TIME (24 hr)

CONDITIONS UPON RECEIPT (CHECK ONE)
☐ Iced wet/Blue ____ °C Temp
☐ Ambient ____ °C Temp ☐ N/A

	YES	NO	N/A
Custody seals present/intact?	☐	☐	☐
Broken containers?	☐	☐	☐
COC agree with sample Labels?	☐	☐	☐
Correct containers for testing?	☐	☐	☐
Headspace issues acceptable?	☐	☐	☐
Holding time(s) acceptable?	☐	☐	☐
Preservative pH's acceptable?	☐	☐	☐
Was pH left unadjusted?	☐	☐	☐
All samples listed on COC received?	☐	☐	☐
Samples properly preserved?	☐	☐	☐
Client's sample documents received?	☐	☐	☐
COC been relinquished?	☐	☐	☐
Are tests listed for each sample?	☐	☐	☐

Method of Shipment (check one): US Postal ☐ UPS ☐ FedEx ☐ MMLI ☐ Client ☐
Date Shipped:
Airbill#:
Logged in by: Location:
LAB NOTES:
Follow up action required: YES ☐ NO ☐
Client informed on:
Client Rep:
By:
Reviewed by:
Date:

MATRIX CODES:
DW – Drinking Water
GW – Ground Water
SW – Solid Waste
WW – Waste Water
SO – Soil/Solid
OL – Oil
SL – Sludge
SU – Surface Water

PRESERVATIVE CODES:
NI – Nitric acid (HNO_3)
HA – Hydrochloric Acid (HCl)
SH – Sodium Hydroxide (NaOH)
ST – Sodium Thiosulfate
ZN – Zinc acetate
SA – Sulfuric Acid (H_2SO_4)
4C – 4°C
AA – Ascorbic Acid
NO – No preservative
SS – Sodium sulfite

SAMPLE CATEGORY = TC

KENTUCKY DIVISION OF WATER / DRINKING WATER BRANCH
BACTERIOLOGICAL ANALYSIS REPORT FORM

General Information – This Section To Be Completed By Collector

PWS ID: KY0180509

Compliance Period (MMYYYY): 112009

PWS Name: CRWD # 2

PWS Contact: Bill

Collection Date (MMDDYYYY): 11242009
(All Samples Reported on this Form were Collected on this Date.)

PWS Address: 69 Marguerite New Concord Ky 42076

PWS Phone: 270-436-6304

Collector Name: William Duncan 11-24-09
Signature/Date

General Information – This Section To Be Completed By Lab

Lab ID: 00031

Lab Receipt Date (MMDDYYYY): 11242009

Total Coliform Analysis Method Code: 328

Analysis Date (MMDDYYYY): 11242009

E Coli Analysis Method Code:

Lab Analyst: Mindy Martin 11/25/09
Signature/Date

Lab Supervisor: 11/25/09
Signature/Date

Sample Information – This Section To Be Completed By Collector

Analysis Information – This Section To Be Completed By Lab

Sample Type (RT, RP, or SP) (See Key)	Special Sample Reason (A, B, C, D, or E) (See Key)	Replacement Sample? (Y or Blank)	Location Code (See Instructions)	Repeat Location Code (DN, UP, or OR) (See Key)	Sample Time (24 hr)	Free Chlorine (Required for all disinfectants except Chloramine)	Total Chlorine (Required when disinfectant is Chloramine)	Lab Sample Number MM 11/25/09 AH 11274	Analysis Time (24 hr)	Result (Total Coliform Count - or - TNTC - or - CNFG) (See Key)	Total Coliform (P/A)	E Coli (P/A)	Lab Sample Number of Original Sample (Required for Repeat and/or Replacement Samples) (See Instructions)
RT			003		0630	1.13	1.21	~~AH 11274~~	1600		A		

The signatories of this form certify by their signatures that collection and analysis of the water sample analyzed and the resulting data hereby submitted, were completed in accordance with the provisions of 401 KAR Chapter 8, specifically including but not limited to 401 KAR 8:200, Section 1 and 401 KAR 8:040; and that the data submitted on this form is a true and accurate report of the results of collection and analysis performed pursuant to the above-referenced regulations. Violations of 401 KAR Chapter 8 are subject to severe penalties prescribed in KRS 224.99-010, up to $25,000 fine per day per violation and in some cases a violation

BACTERIOLOGICAL ANALYSIS REPORT FROM KEY

Sample Type:	RT = Routine (For Compliance)	RP = Repeat (For Compliance)	SP = Special (Not for Compliance)
Special Sample Reason: (Only If Sample Type = SP)	A = Suspected Contamination B = New Plant, Modification, or Line Extension	C = Treatment Modification D = Study/Investigation	E = Line Break, Emergency Repair
Repeat Location Code:	DN = Downstream	UP = Upstream	OR = Original Site

McCoy & McCoy Laboratories, Inc.
www.mccoylabs.com

PO Box 907 * 825 Industrial Rd.
Madisonville, KY 42431
270.821.7375
270.825.9200 fax

2456 Fortune Dr., Suite 160
Lexington, KY 40509
859.299.7775
859.299.7785 fax

173 Island Creek Rd.
Pikeville, KY 41501
606.432.3104
606.432.3171 fax

1800 Kentucky Ave.
Paducah, KY 42003
270.444.6547
270.444.6572 fax

5510 Fern Valley Rd.
Suite 104 Promenade Pavilion
Louisville, KY 40228
502.961.0001

SHADED AREA FOR LAB USE ONLY

CHAIN OF CUSTODY and ANALYTICAL REQUEST

Please print legibly.

Client:	Bill To:	Send Results to:	Compliance Monitoring (check one)? Yes ☐ No ☐ Samples Chlorinated (check one)? Yes ☐ No ☐	PO#
Phone/Email:	Phone/Email	Phone/Email:	PWS ID# / STATE	
Batch#	Project Name	Collected by (Signature):	MMLI Quote # (if applicable)	

Sample ID#	COLLECTION DATE	COLLECTION TIME (24 hr)	SAMPLE DESCRIPTION Composite samples indicate begin time, end time and temp (°C) at end time	SAMPLE ANALYSIS REQUESTED Method ID if known (i.e. 8260B, 6010B/7470A...)	SAMPLE REMARKS (i.e. composite, grab, field readings, corrosive...)	Field Data pH S.U.	Field Data Temp °C	# OF CONTAINERS	MATRIX CODE (See Lower Left)	PRESERVATIVE CODE (See Lower Left)

1. Expedited services not available for all services, please call. 2. Samples received unannounced with less than 48 hours holding time remaining may be subject to additional surcharges. 3. Lab reserves the right to return unused portions of samples to client.

Relinquished by: (Signature)	Received By: (Signature)	DATE	TIME (24 hr)
Relinquished by: (Signature)	Received by: (Signature)	DATE	TIME (24 hr)
Relinquished by: (Signature)	Received for MMLI by:	DATE	TIME (24 hr)

CONDITIONS UPON RECEIPT (CHECK ONE)
☐ Iced wet/Blue ____ °C Temp
☐ Ambient ____ °C Temp ☐ N/A

	YES	NO	N/A
Custody seals present/intact?	☐	☐	☐
Broken containers?	☐	☐	☐
COC agree with sample Labels?	☐	☐	☐
Correct containers for testing?	☐	☐	☐
Headspace issues acceptable?	☐	☐	☐
Holding time(s) acceptable?	☐	☐	☐
Preservative pH is acceptable?	☐	☐	☐
Was pH left unadjusted?	☐	☐	☐
All samples listed on COC received?	☐	☐	☐
Samples properly preserved?	☐	☐	☐
Client's sample documents received?	☐	☐	☐
COC been relinquished?	☐	☐	☐
Are tests listed for each sample?	☐	☐	☐

Method of Shipment (check one): UPS ☐ FedEx ☐ MMLI ☐ US Postal ☐ Client ☐
Date Shipped:
Airbill#:
Logged in by: ____ Location: ____
LAB NOTES
Follow up action required: YES ☐ NO ☐
Client informed on:
Client Rep:
By:
Reviewed by:
Date:

MATRIX CODES:
DW – Drinking Water
SW – Solid Waste
SO – Soil/Solid
SL – Sludge
GW – Ground Water
WW – Waste Water
OL – Oil
SU – Surface Water

PRESERVATIVE CODES:
NI – Nitric acid (HNO_3)
HA – Hydrochloric Acid (HCl)
SH – Sodium Hydroxide (NaOH)
ST – Sodium Thiosulfate
ZN – Zinc acetate
SA – Sulfuric Acid (H_2SO_4)
4C – 4°C
AA – Ascorbic Acid
NO – No preservative
SS – Sodium sulfite

SAMPLE CATEGORY = TC

KENTUCKY DIVISION OF WATER / DRINKING WATER BRANCH
BACTERIOLOGICAL ANALYSIS REPORT FORM

General Information – This Section To Be Completed By Collector

PWS ID: KY0180592

PWS Name: CRWD # 3

PWS Contact: Bill

PWS Address: 69 Marguerite New Concord Ky 42076

PWS Phone: 270-436-6304

Compliance Period (MMYYYY): 112009

Collection Date (MMDDYYYY): 11242009
(All Samples Reported on this Form were Collected on this Date.)

Collector Name: William Duncan 11-24-09
Signature/Date

General Information – This Section To Be Completed By Lab

Lab ID: 00031

Lab Receipt Date (MMDDYYYY): 11242009

Analysis Date (MMDDYYYY): 11242009

Lab Analyst: Mindy Martin 11/25/09
Signature/Date

Total Coliform Analysis Method Code: 328

E Coli Analysis Method Code:

Lab Supervisor: [illegible] 11/25/09
Signature/Date

Sample Information – This Section To Be Completed By Collector

Sample Type (RT, RP, or SP) (See Key)	Special Sample Reason (A, B, C, D, or E) (See Key)	Replacement Sample? (Y or Blank)	Location Code (See Instructions)	Repeat Location Code (DN, UP, or OR) (See Key)	Sample Time (24 hr)	Free Chlorine (Required for all disinfectants except Chloramine)	Total Chlorine (Required when disinfectant is Chloramine)
RT			003		0600	1.22	1.29
						.	.
						.	.
						.	.
						.	.
						.	.
						.	.
						.	.
						.	.
						.	.

Analysis Information – This Section To Be Completed By Lab

Lab Sample Number	Analysis Time (24 hr)	Result (Total Coliform Count - or - TNTC - or - CNFG) (See Key)	Total Coliform (P/A)	E Coli (P/A)	Lab Sample Number of Original Sample (Required for Repeat and/or Replacement Samples) (See Instructions)
AH12795	1620		A		

The signatories of this form certify by their signatures that collection and analysis of the water sample analyzed and the resulting data hereby submitted, were completed in accordance with the provisions of 401 KAR Chapter 8, specifically including but not limited to 401 KAR 8:200, Section 1 and 401 KAR 8:040; and that the data submitted on this form is a true and accurate report of the results of collection and analysis performed pursuant to the above-referenced regulations. Violations of 401 KAR Chapter 8 are subject to severe penalties prescribed in KRS 224.99-010, up to $25,000 fine per day per violation and in some cases a violation may subject the violator to prison.

BACTERIOLOGICAL ANALYSIS REPORT FROM KEY

Sample Type:	RT = Routine (For Compliance)	RP = Repeat (For Compliance)	SP = Special (Not for Compliance)
Special Sample Reason: (Only if Sample Type = SP)	A = Suspected Contamination B = New Plant, Modification, or Line Extension	C = Treatment Modification D = Study/Investigation	E = Line Break, Emergency Repair
Repeat Location Code:	DN = Downstream	UP = Upstream	OR = Original Site

McCoy & McCoy Laboratories, Inc.
www.mccoylabs.com

PO Box 907 * 825 Industrial Rd.
Madisonville, KY 42431
270.821.7375
270.825.9200 fax

2456 Fortune Dr., Suite 160
Lexington, KY 40509
859.299.7775
859.299.7785 fax

173 Island Creek Rd.
Pikeville, KY 41501
606.432.3104
606.432.3171 fax

1800 Kentucky Ave.
Paducah, KY 42003
270.444.6547
270.444.6572 fax

5510 Fern Valley Rd.
Suite 104 Promenade Pavilion
Louisville, KY 40228
502.961.0001

SHADED AREA FOR LAB USE ONLY

CHAIN OF CUSTODY and ANALYTICAL REQUEST

Please print legibly.

Client:	Bill To:	Send Results to:	Compliance Monitoring (check one)? Yes ☐ No ☐ Samples Chlorinated (check one)? Yes ☐ No ☐	PO#
CRWD # 3				
Phone/Email:	Phone/Email	Phone/Email:	PWS ID# / STATE	
Batch#	Project Name	Collected by (Signature): RCH	MMLI Quote # (if applicable)	

Sample ID#	COLLECTION DATE	COLLECTION TIME (24 hr)	SAMPLE DESCRIPTION Composite samples indicate begin time, end time and temp (°C) at end time	SAMPLE ANALYSIS REQUESTED Method ID if known (i.e. 8260B, 6010B/7470A...)	SAMPLE REMARKS (i.e. composite, grab, field readings, corrosive...)	Field Data pH S.U.	Field Data Temp °C	# OF CONTAINERS	MATRIX CODE (See Lower Left)	PRESERVATIVE CODE (See Lower Left)
	11-24-07	0600	GW	RT						

1. Expedited services not available for all services, please call. 2. Samples received unannounced with less than 48 hours holding time remaining may be subject to additional surcharges. 3. Lab reserves the right to return unused portions of samples to client.

Relinquished by: (Signature)	Received By: (Signature)	DATE	TIME (24 hr)
[illegible]	[signature]	11-27-07	0900
Relinquished by: (Signature)	Received by: (Signature)	DATE	TIME (24 hr)
Relinquished by: (Signature)	Received for MMLI by:	DATE	TIME (24 hr)

CONDITIONS UPON RECEIPT (CHECK ONE)
☐ Iced wet/Blue ____ °C Temp
☐ Ambient ____ °C Temp ☐ N/A

	YES	NO	N/A
Custody seals present/intact?	☐	☐	☐
Broken containers?	☐	☐	☐
COC agree with sample Labels?	☐	☐	☐
Correct containers for testing?	☐	☐	☐
Headspace issues acceptable?	☐	☐	☐
Holding time(s) acceptable?	☐	☐	☐
Preservative pH's acceptable?	☐	☐	☐
Was pH left unadjusted?	☐	☐	☐
All samples listed on COC received?	☐	☐	☐
Samples properly preserved?	☐	☐	☐
Client's sample documents received?	☐	☐	☐
COC been relinquished?	☐	☐	☐
Are tests listed for each sample?	☐	☐	☐

Method of Shipment (check one) US Postal ☐ UPS ☐ FedEx ☐ MMLI ☐ Client ☐
Date Shipped:
Airbill #:
Logged in by: Location:
LAB NOTES:
Follow up action required YES ☐ NO ☐
Client informed on
Client Rep:
By:
Reviewed by:
Date:

MATRIX CODES:
DW – Drinking Water
GW – Ground Water
SW – Solid Waste
WW – Waste Water
SO – Soil/Solid
OL – Oil
SL – Sludge
SU – Surface Water

PRESERVATIVE CODES:
NI – Nitric acid (HNO_3)
HA – Hydrochloric Acid (HCl)
SH – Sodium Hydroxide (NaOH)
ST – Sodium Thiosulfate
ZN – Zinc acetate
SA – Sulfuric Acid (H_2SO_4)
4C – 4°C
AA – Ascorbic Acid
NO – No preservative
SS – Sodium sulfite

X

SAMPLE CATEGORY = TC

KENTUCKY DIVISION OF WATER / DRINKING WATER BRANCH
BACTERIOLOGICAL ANALYSIS REPORT FORM

General Information – This Section To Be Completed By Collector

PWS ID: KY0118316

PWS Name: CRWD # 4

PWS Contact: Bill

PWS Address: 69 Marguerite New Concord Ky 42076

PWS Phone: 270-436-6304

Compliance Period (MMYYYY): 112009

Collection Date (MMDDYYYY): 112420 09
(All Samples Reported on this Form were Collected on this Date.)

Collector Name: William Duncan 11-24-09
Signature/Date

General Information – This Section To Be Completed By Lab

Lab ID: 00031

Lab Receipt Date (MMDDYYYY): 11242009

Analysis Date (MMDDYYYY): 11242009

Total Coliform Analysis Method Code: 528

E Coli Analysis Method Code:

Lab Analyst: Mindy Martin 11/25/09
Signature/Date

Lab Supervisor: 11/25/09
Signature/Date

Sample Information – This Section To Be Completed By Collector / Analysis Information – This Section To Be Completed By Lab

Sample Type (RT, RP, or SP) (See Key)	Special Sample Reason (A, B, C, D, or E) (See Key)	Replacement Sample? (Y or Blank)	Location Code (See Instructions)	Repeat Location Code (DN, UP, or OR) (See Key)	Sample Time (24 hr)	Free Chlorine (Required for all disinfectants except Chloramine)	Total Chlorine (Required when disinfectant is Chloramine)	Lab Sample Number	Analysis Time (24 hr)	Result (Total Coliform Count - or - TNTC - or - CNFG) (See Key)	Total Coliform (P/A)	E Coli (P/A)	Lab Sample Number of Original Sample (Required for Repeat and/or Replacement Samples) (See Instructions)
RT			013		0800	1.11	1.18	AH11276	1629		A		

The signatories of this form certify by their signatures that collection and analysis of the water sample analyzed and the resulting data hereby submitted, were completed in accordance with the provisions of 401 KAR Chapter 8, specifically including but not limited to 401 KAR 8:200, Section 1 and 401 KAR 8:040; and that the data submitted on this form is a true and accurate report of the results of collection and analysis performed pursuant to the above-referenced regulations. Violations of 401 KAR Chapter 8 are subject to severe penalties prescribed in KRS 224.99-010, up to $25,000 fine per day per violation and in some cases a violation may subject the violator to prison.

BACTERIOLOGICAL ANALYSIS REPORT FROM KEY

Sample Type:	RT = Routine (For Compliance)	RP = Repeat (For Compliance)	SP = Special (Not for Compliance)
Special Sample Reason: (Only If Sample Type = SP)	A = Suspected Contamination B = New Plant, Modification, or Line Extension	C = Treatment Modification D = Study/Investigation	E = Line Break, Emergency Repair
Repeat Location Code:	DN = Downstream	UP = Upstream	OR = Original Site

McCoy & McCoy Laboratories, Inc.
www.mccoylabs.com

PO Box 907 * 825 Industrial Rd.
Madisonville, KY 42431
270.821.7375
270.825.9200 fax

2456 Fortune Dr., Suite 160
Lexington, KY 40509
859.299.7775
859.299.7785 fax

173 Island Creek Rd.
Pikeville, KY 41501
606.432.3104
606.432.3171 fax

1800 Kentucky Ave.
Paducah, KY 42003
270.444.6547
270.444.6572 fax

5510 Fern Valley Rd.
Suite 104 Promenade Pavilion
Louisville, KY 40228
502.961.0001

CHAIN OF CUSTODY and ANALYTICAL REQUEST

Please print legibly.

SHADED AREA FOR LAB USE ONLY

Client:	Bill To:	Send Results to:	Compliance Monitoring (check one)? Yes ☐ No ☐ / Samples Chlorinated (check one)? Yes ☐ No ☐	PO#
CRWD #4			PWS ID# / STATE	
Phone/Email:	Phone/Email	Phone/Email:	MMLI Quote # (if applicable)	
Batch#	Project Name	Collected by (Signature): RJL		

Sample ID#	COLLECTION DATE	COLLECTION TIME (24 hr)	SAMPLE DESCRIPTION Composite samples indicate begin time, end time and temp (°C) at end time	SAMPLE ANALYSIS REQUESTED Method ID if known (i.e. 8260B, 6010B/7470A...)	SAMPLE REMARKS (i.e. composite, grab, field readings, corrosive...)	Field Data pH S.U.	Field Data Temp °C	# OF CONTAINERS	MATRIX CODE (See Lower Left)	PRESERVATIVE CODE (See Lower Left)
	11-24-09	0850	013	RT						

1. Expedited services not available for all services, please call. 2. Samples received unannounced with less than 48 hours holding time remaining may be subject to additional surcharges. 3. Lab reserves the right to return unused portions of samples to client.

Relinquished by: (Signature)	Received By: (Signature)	DATE	TIME (24 hr)
[signature]	[signature]	11-24-09	0850
Relinquished by: (Signature)	Received by: (Signature)	DATE	TIME (24 hr)
Relinquished by: (Signature)	Received for MMLI by:	DATE	TIME (24 hr)

MATRIX CODES:
DW – Drinking Water
SW – Solid Waste
SO – Soil/Solid
SL – Sludge
GW – Ground Water
WW – Waste Water
OL – Oil
SU – Surface Water

PRESERVATIVE CODES:
NI – Nitric acid (HNO_3)
HA – Hydrochloric Acid (HCl)
SH – Sodium Hydroxide (NaOH)
ST – Sodium Thiosulfate
ZN – Zinc acetate
SA – Sulfuric Acid (H_2SO_4)
4C – 4°C
AA – Ascorbic Acid
NO – No preservative
SS – Sodium sulfite

CONDITIONS UPON RECEIPT (CHECK ONE)
☐ Iced wet/Blue ____ °C Temp
☒ Ambient ____ °C Temp ☐ N/A

	YES	NO	N/A
Custody seals present/intact?	☐	☐	☐
Broken containers?	☐	☐	☐
COC agree with sample Labels?	☐	☐	☐
Correct containers for testing?	☐	☐	☐
Headspace issues acceptable?	☐	☐	☐
Holding time(s) acceptable?	☐	☐	☐
Preservative pH's acceptable?	☐	☐	☐
Was pH left unadjusted?	☐	☐	☐
All samples listed on COC received?	☐	☐	☐
Samples properly preserved?	☐	☐	☐
Client's sample documents received?	☐	☐	☐
COC been relinquished?	☐	☐	☐
Are tests listed for each sample?	☐	☐	☐

Method of Shipment (check one): UPS ☐ FedEx ☐ MMLI ☐ US Postal ☐ Client ☐
Date Shipped:
Airbill#:
Logged in by: Location:
LAB NOTES:
Follow up action required: YES ☐ NO ☐
Client informed on: / /
Client Rep:
By:
Reviewed by:
Date: / /

SAMPLE CATEGORY = TC

KENTUCKY DIVISION OF WATER / DRINKING WATER BRANCH
BACTERIOLOGICAL ANALYSIS REPORT FORM

General Information – This Section To Be Completed By Collector

PWS ID: KY0180549

PWS Name: CRWD #1

PWS Contact: Bill

PWS Address: 69 Marguerite Ave Concord Ky 42076

PWS Phone: 270-436-6304

Compliance Period (MMYYYY): 122009

Collection Date (MMDDYYYY): 12162009
(All Samples Reported on this Form were Collected on this Date.)

Collector Name: William Duncan 12-16-09
Signature/Date

General Information – This Section To Be Completed By Lab

Lab ID: 00001

Lab Receipt Date (MMDDYYYY): 12162009

Analysis Date (MMDDYYYY): 12172009

Total Coliform Analysis Method Code: 785

E Coli Analysis Method Code:

Lab Analyst: Mindy Martin 12/17/09
Signature/Date

Lab Supervisor: 12/17/09
Signature/Date

Sample Information – This Section To Be Completed By Collector

Sample Type (RT, RP, or SP) (See Key)	Special Sample Reason (A, B, C, D, or E) (See Key)	Replacement Sample? (Y or Blank)	Location Code (See Instructions)	Repeat Location Code (DN, UP, or OR) (See Key)	Sample Time (24 hr)	Free Chlorine (Required for all disinfectants except Chloramine)	Total Chlorine (Required when disinfectant is Chloramine)
RT			004		0730	1.21	1.29
						.	.
						.	.
						.	.
						.	.
						.	.
						.	.
						.	.
						.	.
						.	.

Analysis Information – This Section To Be Completed By Lab

Lab Sample Number	Analysis Time (24 hr)	Result (Total Coliform Count - or - TNTC - or - CNFG) (See Key)	Total Coliform (P/A)	E Coli (P/A)	Lab Sample Number of Original Sample (Required for Repeat and/or Replacement Samples) (See Instructions)
AH15163	1550		A		

The signatories of this form certify by their signatures that collection and analysis of the water sample analyzed and the resulting data hereby submitted, were completed in accordance with the provisions of 401 KAR Chapter 8, specifically including but not limited to 401 KAR 8:200, Section 1 and 401 KAR 8:040; and that the data submitted on this form is a true and accurate report of the results of collection and analysis performed pursuant to the above-referenced regulations. Violations of 401 KAR Chapter 8 are subject to severe penalties prescribed in KRS 224.99-010, up to $25,000 fine per day per violation and in some cases a violation may subject the violator to prison.

BACTERIOLOGICAL ANALYSIS REPORT FROM KEY

Sample Type:	RT = Routine (For Compliance)	RP = Repeat (For Compliance)	SP = Special (Not for Compliance)
Special Sample Reason: (Only If Sample Type = SP)	A = Suspected Contamination B = New Plant, Modification, or Line Extension	C = Treatment Modification D = Study/Investigation	E = Line Break, Emergency Repair
Repeat Location Code: (Only If Sample Type = RP)	DN = Downstream	UP = Upstream	OR = Original Site

SAMPLE CATEGORY = TC

KENTUCKY DIVISION OF WATER / DRINKING WATER BRANCH
BACTERIOLOGICAL ANALYSIS REPORT FORM

General Information – This Section To Be Completed By Collector

PWS ID: KY0180509

PWS Name: CRWD # 2

PWS Contact: Bill

PWS Address: 69 Marguerite Ln Concord Ky 42016

PWS Phone: 270-436-6304

Compliance Period (MMYYYY): 122009

Collection Date (MMDDYYYY): 12/16/2009
(All Samples Reported on this Form were Collected on this Date.)

Collector Name: William Duncan 12-16-09
Signature/Date

General Information – This Section To Be Completed By Lab

Lab ID: 00031

Lab Receipt Date (MMDDYYYY): 12162009

Analysis Date (MMDDYYYY): 12162009

Total Coliform Analysis Method Code: 32

E Coli Analysis Method Code:

Lab Analyst: Mindy Martin 12/16/09
Signature/Date

Lab Supervisor: 12/17/09
Signature/Date

Sample Information – This Section To Be Completed By Collector

Sample Type (RT, RP, or SP) (See Key)	Special Sample Reason (A, B, C, D, or E) (See Key)	Replacement Sample? (Y or Blank)	Location Code (See Instructions)	Repeat Location Code (DN, UP, or OR) (See Key)	Sample Time (24 hr)	Free Chlorine (Required for all disinfectants except Chloramine)	Total Chlorine (Required when disinfectant is Chloramine)
RT			004		0630	1.17	1.25

Analysis Information – This Section To Be Completed By Lab

Lab Sample Number	Analysis Time (24 hr)	Result (Total Coliform Count - or - TNTC - or - CNFG) (See Key)	Total Coliform (P/A)	E Coli (P/A)	Lab Sample Number of Original Sample (Required for Repeat and/or Replacement Samples) (See Instructions)
AH15164	1550		A		

The signatories of this form certify by their signatures that collection and analysis of the water sample analyzed and the resulting data hereby submitted, were completed in accordance with the provisions of 401 KAR Chapter 8, specifically including but not limited to 401 KAR 8:200, Section 1 and 401 KAR 8:040; and that the data submitted on this form is a true and accurate report of the results of collection and analysis performed pursuant to the above-referenced regulations. Violations of 401 KAR Chapter 8 are subject to severe penalties prescribed in KRS 224.99-010, up to $25,000 fine per day per violation and in some cases a violation may subject the violator to prison.

BACTERIOLOGICAL ANALYSIS REPORT FROM KEY

Sample Type:	RT = Routine (For Compliance)	RP = Repeat (For Compliance)	SP = Special (Not for Compliance)
Special Sample Reason: (Only If Sample Type = SP)	A = Suspected Contamination B = New Plant, Modification, or Line Extension	C = Treatment Modification D = Study/Investigation	E = Line Break, Emergency Repair
Repeat Location Code: (Only If Sample Type = RP)	DN = Downstream	UP = Upstream	OR = Original Site

SAMPLE CATEGORY = TC

KENTUCKY DIVISION OF WATER / DRINKING WATER BRANCH
BACTERIOLOGICAL ANALYSIS REPORT FORM

General Information – This Section To Be Completed By Collector

PWS ID: KY0180502

PWS Name: CRWD # 3

PWS Contact: Bill

PWS Address: 69 Marguerite New Concord Ky 42076

PWS Phone: 270-436-6304

Compliance Period (MMYYYY): 122009

Collection Date (MMDDYYYY): 12162009
(All Samples Reported on this Form were Collected on this Date.)

Collector Name: William Duncan 12-16-09
Signature/Date

General Information – This Section To Be Completed By Lab

Lab ID: 00001

Lab Receipt Date (MMDDYYYY): 12/17/2009

Analysis Date (MMDDYYYY): 12/17/2009

Total Coliform Analysis Method Code: 52

E Coli Analysis Method Code:

Lab Analyst: Mindy Martin 12/17/09
Signature/Date

Lab Supervisor: [signature] 12/17/09
Signature/Date

Sample Information – This Section To Be Completed By Collector

Sample Type (RT, RP, or SP) (See Key)	Special Sample Reason (A, B, C, D, or E) (See Key)	Replacement Sample? (Y or Blank)	Location Code (See Instructions)	Repeat Location Code (DN, UP, or OR) (See Key)	Sample Time (24 hr)	Free Chlorine (Required for all disinfectants except Chloramine)	Total Chlorine (Required when disinfectant is Chloramine)
RT			004		0600	1.08	1.16

Analysis Information – This Section To Be Completed By Lab

Lab Sample Number	Analysis Time (24 hr)	Result (Total Coliform Count - or - TNTC - or - CNFG) (See Key)	Total Coliform (P/A)	E Coli (P/A)	Lab Sample Number of Original Sample (Required for Repeat and/or Replacement Samples) (See Instructions)
AHIS165	1550		A		

The signatories of this form certify by their signatures that collection and analysis of the water sample analyzed and the resulting data hereby submitted, were completed in accordance with the provisions of 401 KAR Chapter 8, specifically including but not limited to 401 KAR 8:200, Section 1 and 401 KAR 8:040; and that the data submitted on this form is a true and accurate report of the results of collection and analysis performed pursuant to the above-referenced regulations. Violations of 401 KAR Chapter 8 are subject to severe penalties prescribed in KRS 224.99-010, up to $25,000 fine per day per violation and in some cases a violation

BACTERIOLOGICAL ANALYSIS REPORT FROM KEY

Sample Type:	RT = Routine (For Compliance)	RP = Repeat (For Compliance)	SP = Special (Not for Compliance)
Special Sample Reason: (Only if Sample Type = SP)	A = Suspected Contamination B = New Plant, Modification, or Line Extension	C = Treatment Modification D = Study/Investigation	E = Line Break, Emergency Repair
Repeat Location Code:	DN = Downstream	UP = Upstream	OR = Original Site

SAMPLE CATEGORY = TC

KENTUCKY DIVISION OF WATER / DRINKING WATER BRANCH
BACTERIOLOGICAL ANALYSIS REPORT FORM

General Information – This Section To Be Completed By Collector

PWS ID: KY0183106

PWS Name: CRWD # 4

PWS Contact: Bill

PWS Address: 69 Marguerite New Concord, Ky 42076

PWS Phone: 270-436-6304

Compliance Period (MMYYYY): 122009

Collection Date (MMDDYYYY): 12/16/2009
(All Samples Reported on this Form were Collected on this Date.)

Collector Name: William Duncan 12-16-09
Signature/Date

General Information – This Section To Be Completed By Lab

Lab ID: 00001

Lab Receipt Date (MMDDYYYY): 12/16/2009

Analysis Date (MMDDYYYY): 12/16/2009

Total Coliform Analysis Method Code: 990

E Coli Analysis Method Code:

Lab Analyst: Mindy Martin 12/17/09
Signature/Date

Lab Supervisor: [signature] 12/17/09
Signature/Date

Sample Information – This Section To Be Completed By Collector

Sample Type (RT, RP, or SP) (See Key)	Special Sample Reason (A, B, C, D, or E) (See Key)	Replacement Sample? (Y or Blank)	Location Code (See Instructions)	Repeat Location Code (DN, UP, or OR) (See Key)	Sample Time (24 hr)	Free Chlorine (Required for all disinfectants except Chloramine)	Total Chlorine (Required when disinfectant is Chloramine)
RT			014		0800	1.23	1.31
						.	.
						.	.
						.	.
						.	.
						.	.
						.	.
						.	.
						.	.
						.	.

Analysis Information – This Section To Be Completed By Lab

Lab Sample Number	Analysis Time (24 hr)	Result (Total Coliform Count - or - TNTC - or - CNFG) (See Key)	Total Coliform (P/A)	E Coli (P/A)	Lab Sample Number of Original Sample (Required for Repeat and/or Replacement Samples) (See Instructions)
AH15166	1550		A		

The signatories of this form certify by their signatures that collection and analysis of the water sample analyzed and the resulting data hereby submitted, were completed in accordance with the provisions of 401 KAR Chapter 8, specifically including but not limited to 401 KAR 8:200, Section 1 and 401 KAR 8:040; and that the data submitted on this form is a true and accurate report of the results of collection and analysis performed pursuant to the above-referenced regulations. Violations of 401 KAR Chapter 8 are subject to severe penalties prescribed in KRS 224.99-010, up to $25,000 fine per day per violation and in some cases a violation may subject the violator to prison.

BACTERIOLOGICAL ANALYSIS REPORT FROM KEY

Sample Type:	RT = Routine (For Compliance)	RP = Repeat (For Compliance)	SP = Special (Not for Compliance)
Special Sample Reason: (Only If Sample Type = SP)	A = Suspected Contamination B = New Plant, Modification, or Line Extension	C = Treatment Modification D = Study/Investigation	E = Line Break, Emergency Repair
Repeat Location Code:	DN = Downstream	UP = Upstream	OR = Original Site

SAMPLE CATEGORY = TC

KENTUCKY DIVISION OF WATER / DRINKING WATER BRANCH
BACTERIOLOGICAL ANALYSIS REPORT FORM

General Information – This Section To Be Completed By Collector

PWS ID: KY0180549

PWS Name: CRWD # 1

PWS Contact: Bill

PWS Address: 69 Marguerite New Concord Ky 42076

PWS Phone: 270-436-6304

Compliance Period (MMYYYY): 122009

Collection Date (MMDDYYYY): 12282009
(All Samples Reported on this Form were Collected on this Date.)

Collector Name: William Duncan 12-28-09
Signature/Date

General Information – This Section To Be Completed By Lab

Lab ID: 0003

Lab Receipt Date (MMDDYYYY): 12292009

Analysis Date (MMDDYYYY): 12292009

Total Coliform Analysis Method Code: 006

E Coli Analysis Method Code:

Lab Analyst: Mindy Martin 12/29/09
Signature/Date

Lab Supervisor: [signature] 12/30/09
Signature/Date

Sample Information – This Section To Be Completed By Collector

Sample Type (RT, RP, or SP) (See Key)	Special Sample Reason (A, B, C, D, or E) (See Key)	Replacement Sample? (Y or Blank)	Location Code (See Instructions)	Repeat Location Code (DN, UP, or OR) (See Key)	Sample Time (24 hr)	Free Chlorine (Required for all disinfectants except Chloramine)	Total Chlorine (Required when disinfectant is Chloramine)
RT			005		0730	1.08	1.16
						.	.
						.	.
						.	.
						.	.
						.	.
						.	.
						.	.
						.	.
						.	.

Analysis Information – This Section To Be Completed By Lab

Lab Sample Number	Analysis Time (24 hr)	Result (Total Coliform Count - or - TNTC - or - CNFG) (See Key)	Total Coliform (P/A)	E Coli (P/A)	Lab Sample Number of Original Sample (Required for Repeat and/or Replacement Samples) (See Instructions)
AH17410	0720		A		

The signatories of this form certify by their signatures that collection and analysis of the water sample analyzed and the resulting data hereby submitted, were completed in accordance with the provisions of 401 KAR Chapter 8, specifically including but not limited to 401 KAR 8:200, Section 1 and 401 KAR 8:040; and that the data submitted on this form is a true and accurate report of the results of collection and analysis performed pursuant to the above-referenced regulations. Violations of 401 KAR Chapter 8 are subject to severe penalties prescribed in KRS 224.99-010, up to $25,000 fine per day per violation and in some cases a violation may subject the violator to prison.

BACTERIOLOGICAL ANALYSIS REPORT FROM KEY

Sample Type:	RT = Routine (For Compliance)	RP = Repeat (For Compliance)	SP = Special (Not for Compliance)
Special Sample Reason: (Only if Sample Type = SP)	A = Suspected Contamination B = New Plant, Modification, or Line Extension	C = Treatment Modification D = Study/Investigation	E = Line Break, Emergency Repair
Repeat Location Code: (Only if Sample Type = RP)	DN = Downstream	UP = Upstream	OR = Original Site

McCoy & McCoy Laboratories, Inc.
P. O. Box 907
Madisonville, KY 42431
www.mccoylabs.com

Chain of Custody

Lexington KY 859-299-7775
Paducah KY 270-444-6547
Louisville KY 502-961-0001
Madisonville KY 270-821-7375
Pikeville KY 606-432-3104

Route: 54 Project SDWA

Center Ridge Water System
Attn: William Duncan
69 Marguerite Blvd
Newconcord KY 42076

Collected by: MMLI/OPL

Collection Date: 12/28/09

Collection Time: 1515

P. O. No:

PhoneFax: 270-436-6304

CE648413 Center Ridge WD #1 Sodium 0180549 TPA

Logbatch

Composite Sample Start Date Time

Sample Nos

Stop Date Time

Field Data By: Date Time Fecal Date Time

pH Meter#: pH: DO Meter#: DO:

Temp: Cl: Flow: Units: Matrix: Liquid

Collection Method	Test	Analysis Requested	Bottle Type and Preservative
G / C	DW_METPU_1	Drinking Water Metals Pick Up from Lo	
G / C	DW_NAICPAES_1	Sodium by ICP/AES	250 ml Plastic Nitric Acid 4 c

Relinquished by: [signature] Date/Time: 12/28/09/1525

Received by: Date/Time:

Relinquished by: Date/Time:

Received by: Date/Time:

Relinquished by: Date/Time:

Received by: Date/Time:

FUEL SERVICES

www.monoylabs.com
270-821-7375 606-432-3104

Route: 54 Project SDWA Collected by: MMLT/DPL Collection Date: 12/28/09

Center Ridge Water System
Attn: William Duncan
69 Marguerite Blvd
Newconcord KY 42076

P. O. No: Collection Time: 1515

Phone/Fax: 270-436-6304

CE648403 Center Ridge WD #1 SECOND 0180549

Logbatch Composite Sample Start Date Time
Sample Nos Stop Date Time

Field Data By: MMLT/DPL Date 12/28/09 Time Fecal Date Time
pH Meter#: pH: 7.15 DO Meter#: DO:
Temp: 12.5 Cl: Flow: Units: Matrix: Liquid

Collection Method	Test	Analysis Requested	Bottle Type and Preservative
G / C	DW_ALKTOT_1	Total Alkalinity by Titrimetry Mdv	1 Liter Plastic 4 c
G / C	TEMPFLD3	Temperature, C (Field)	
G / C	DW_MBAS_1	MBAS as LAS Mdv	1 Liter Amber Wide Mouth Glass 4 c
G / C	DW_ODOR_1	Odor Mdv	1 Liter Amber Wide Mouth Glass 4 c
G / C	DW_ALKBICAR_1	Alkalinity, Bicarbonate (HCO3) Mdv	1 Liter Plastic 4 c
G / C	DW_ALKCAR_1	Alkalinity, Carbonate (CO3) Mdv	1 Liter Plastic 4 c
G / C	DW_ALKPHENO_	Alkalinity, Pheno Mdv	1 Liter Plastic 4 c
G / C	DW_CL_1	Chloride by IC Mdv	1 Liter Plastic 4 c
G / C	DW_FIC_1	Fluoride by IC Mdv	1 Liter Plastic 4 c
G / C	PH_FLD3	pH (Field)	
G / C	DW_SO4IC_1	Sulfate by IC Mdv	1 Liter Plastic 4 c
G / C	DW_MNICPMS_1	Manganese by ICP/MS	250 ml Plastic Nitric Acid 4 c
G / C	DW_TDS_1	Total Dissolved Solids Mdv	1 Liter Plastic 4 c
G / C	DW_TURBIDITY_	Turbidity Mdv	1 Liter Plastic 4 c
G / C	DW_ALICPMS_1	Aluminum by ICP/MS	250 ml Plastic Nitric Acid 4 c
G / C	DW_CAICPAES_1	Calcium by ICP/AES	250 ml Plastic Nitric Acid 4 c
G / C	DW_CUICPMS_1	Copper by ICP/MS	250 ml Plastic Nitric Acid 4 c
G / C	DW_HARDNESS_	Hardness as CaCO3 Mdv	250 ml Plastic Nitric Acid 4 c
G / C	DW_FEICPAES_1	Iron by ICP/AES	250 ml Plastic Nitric Acid 4 c
G / C	DW_AGICPMS_1	Silver by ICP/MS	250 ml Plastic Nitric Acid 4 c
G / C	DW_COLORPCU_	PCU Color Mdv	1 Liter Plastic 4 c
G / C	DW_ZNICPMS_1	Zinc by ICP/MS	250 ml Plastic Nitric Acid 4 c
G / C	DW_HARDCA_1	Hardness, Calcium	
G / C	DW_METPU_1	Drinking Water Metals Pick Up from Lo	
G / C	MM_ICPU_1	Multi Matrix IC Pick Up from Login	

Relinquished by: [signature] Date/Time: 12/28/09 / 1525
Received by: Date/Time:
Relinquished by: Date/Time:
Received by: Date/Time:
Relinquished by: Date/Time:
Received by: Date/Time:

FUEL SERVICES

McCoy & McCoy Laboratories, Inc.
P. O. Box 997
Madisonville, KY 42431
www.mccoylabs.com

Chain of Custody

Lexington KY 859-299-7775
Paducah KY 270-444-6547
Louisville KY 502-961-0001
Madisonville KY 270-821-7375
Pikeville KY 606-432-3104

Route: 54 Project SDWA

Collected by: MMLI/DPL

Collection Date: 12/28/09

Collection Time: 1515

Center Ridge Water System
Attn: William Duncan
69 Marguerite Blvd
Newconcord KY 42076

P. O. No:

PhoneFax: 270-436-6304

CE648415 Center Ridge WD #1 RAD 0180549

Logbatch

Composite Sample Start Date Time

Sample Nos

Stop Date Time

Field Data By: Date Time Fecal Date Time

pH Meter#: pH: DO Meter#: DO:

Temp: Cl: Flow: Units: Matrix: Liquid

Collection Method	Test	Analysis Requested	Bottle Type and Preservative
G / C	RAD228_1	Radium 228	1 Liter Plastic Nitric Acid 4 c
G / C	ALPHA_1	Gross Alpha - SDWA	1 Liter Plastic Nitric Acid 4 c
G / C	SHIP13_1	UPS Shipping Charge	
G / C	RAD228_SHIP_1	Radium 228 Date sent to sub	
G / C	ALPHA_SHIP_1	Gross Alpha - SDWA Date shipped to	

Relinquished by: Date/Time: 12/28/09/1525
Received by: Date/Time:
Relinquished by: Date/Time:
Received by: Date/Time:
Relinquished by: Date/Time:
Received by: Date/Time:

FUEL SERVICES

McCoy & McCoy Laboratories, Inc.
P. O. Box 907
Madisonville, KY 42431
www.mccoylabs.com

Chain of Custody

Lexington KY 859-299-7775
Madisonville KY 270-821-7375
Paducah KY 270-444-6547
Pikeville KY 606-432-3104
Louisville K 502-961-0(

Route: 54 Project SDWA

Collected by: MMLI/DPL

Collection Date: 12/28/0

Collection Time: 1515

Center Ridge Water System
Attn: William Duncan
69 Marguerite Blvd
Newconcord KY 42076

P. O. No: _____

PhoneFax: 270-436-6304

CE648402 Center Ridge WD #1 Nitrate 0180549 TPA

Logbatch _____

Composite Sample Start Date _____ Time _____

Stop Date _____ Time _____

Sample Nos _____

Field Data By: _____ Date _____ Time _____ Fecal Date _____ Time

pH Meter#: _____ pH: _____ DO Meter#: _____ DO: _____

Temp: _____ Cl: _____ Flow: _____ Units: _____ Matrix: L

Collection Method	Test	Analysis Requested	Bottle Type and Preservative
G/C	MM_ICPU_1	Multi Matrix IC Pick Up from Login	
G/C	DW_NO3_1	Nitrate as N by IC Mdv	1 Liter Plastic 4 c

CRWD #1	0180549	12-28-09	RT	005	0730	T 1.16	F 1.08
CRWD #2	0180509	12-28-09	RT	005	0630	F 1.28	T 1.34
CRWD #3	0180502	12-28-09	RT	005	0600	T 1.25	F 1.18
CRWD #4	0183106	12-28-09	RT	020	0800	T 1.18	F 1.11

Relinquished by: [signature] Date/Time: 12/28/09/1525

Received by: _____ Date/Time: _____

Relinquished by: _____ Date/Time: _____

Received by: _____ Date/Time: _____

Relinquished by: _____ Date/Time: _____

Received by: _____ Date/Time: _____

FUEL
SERV

SAMPLE CATEGORY = TC

KENTUCKY DIVISION OF WATER / DRINKING WATER BRANCH
BACTERIOLOGICAL ANALYSIS REPORT FORM

General Information – This Section To Be Completed By Collector

PWS ID: KY0180509

PWS Name: CRWD # 2

PWS Contact: Bill

PWS Address: 69 Marguerite New Concord Ky 42076

PWS Phone: 270-436-6304

Compliance Period (MMYYYY): 122009

Collection Date (MMDDYYYY): 12282009
(All Samples Reported on this Form were Collected on this Date.)

Collector Name: William Duncan 12-28-09
Signature/Date

General Information – This Section To Be Completed By Lab

Lab ID: 00031

Lab Receipt Date (MMDDYYYY): 12282009

Analysis Date (MMDDYYYY): 12282009

Total Coliform Analysis Method Code: 028

E Coli Analysis Method Code:

Lab Analyst: Mindy Martin 12/30/09
Signature/Date

Lab Supervisor: [signature] 12/30/09
Signature/Date

Sample Information – This Section To Be Completed By Collector

Sample Type (RT, RP, or SP) (See Key)	Special Sample Reason (A, B, C, D, or E) (See Key)	Replacement Sample? (Y or Blank)	Location Code (See Instructions)	Repeat Location Code (DN, UP, or OR) (See Key)	Sample Time (24 hr)	Free Chlorine (Required for all disinfectants except Chloramine)	Total Chlorine (Required when disinfectant is Chloramine)
RT			005		0630	1.28	1.34
						.	.
						.	.
						.	.
						.	.
						.	.
						.	.
						.	.
						.	.
						.	.

Analysis Information – This Section To Be Completed By Lab

Lab Sample Number	Analysis Time (24 hr)	Result (Total Coliform Count - or - TNTC - or - CNFG) (See Key)	Total Coliform (P/A)	E Coli (P/A)	Lab Sample Number of Original Sample (Required for Repeat and/or Replacement Samples) (See Instructions)
AH11411	0740		A		

The signatories of this form certify by their signatures that collection and analysis of the water sample analyzed and the resulting data hereby submitted, were completed in accordance with the provisions of 401 KAR Chapter 8, specifically including but not limited to 401 KAR 8:200, Section 1 and 401 KAR 8:040; and that the data submitted on this form is a true and accurate report of the results of collection and analysis performed pursuant to the above-referenced regulations. Violations of 401 KAR Chapter 8 are subject to severe penalties prescribed in KRS 224.99-010, up to $25,000 fine per day per violation and in some cases a violation may subject the violator to prison.

BACTERIOLOGICAL ANALYSIS REPORT FROM KEY

Sample Type:	RT = Routine (For Compliance)	RP = Repeat (For Compliance)	SP = Special (Not for Compliance)
Special Sample Reason: (Only if Sample Type = SP)	A = Suspected Contamination B = New Plant, Modification, or Line Extension	C = Treatment Modification D = Study/Investigation	E = Line Break, Emergency Repair
Repeat Location Code: (Only if Sample Type = RP)	DN = Downstream	UP = Upstream	OR = Original Site

McCoy & McCoy Laboratories, Inc.
P. O. Box 907
Madisonville, KY 42431
www.mccoylabs.com

Chain of Custody

Lexington KY 859-299-7775
Paducah KY 270-444-6547
Louisville KY 502-961-0001
Madisonville KY 270-821-7375
Pikeville KY 606-432-3104

Route: 54 Project SDWA

Center Ridge Water Dist #2
Attn: William Duncan
69 Marguerite Blvd
Newconcord KY 42076

Collected by: MMLI/DPL

Collection Date: 12/28/09
Collection Time: 1620

P. O. No:

Phone Fax: 270-436-6304

CE648512 Center Ridge WD #2 Sodium 0180509 TPA

Logbatch

Composite Sample Start Date Time

Sample Nos

Stop Date Time

Field Data By: Date Time Fecal Date Time

pH Meter#: pH: DO Meter#: DO:

Temp: Cl: Flow: Units: Matrix: Liquid

Collection Method	Test	Analysis Requested	Bottle Type and Preservative
G/C	DW_METPU_1	Drinking Water Metals Pick Up from Lo	
G/C	DW_NAICPAES_1	Sodium by ICP/AES	250 ml Plastic Nitric Acid 4 c

Relinquished by: Date/Time: 12/28/09/1630

Received by: Date/Time:

Relinquished by: Date/Time:

Received by: Date/Time:

Relinquished by: Date/Time:

Received by: Date/Time:

FUEL SERVICES

McCoy & McCoy Laboratories, Inc.
P. O. Box 907

Chain of Custody

Lexington KY 859-299-7775
Paducah KY 270-444-6547
Louisville KY 502-961-0001

McCoy & McCoy Laboratories, Inc.
P. O. Box 907
Madisonville, KY 42431
www.mccoylabs.com

Chain of Custody

Lexington KY 859-299-7775
Paducah KY 270-444-6547
Louisville KY 502-961-0001
Madisonville KY 270-821-7375
Pikeville KY 606-432-3104

Route: 54 Project SDWA

Collected by: MMLI/DPL

Collection Date: 12/28/09

Collection Time: 1620

Center Ridge Water Dist #2
Attn: William Duncan
69 Marguerite Blvd
Newconcord KY 42076

P. O. No:

Phone Fax: 270-436-6304

CE648502 Center Ridge WD #2 Nitrate 0180509 TPA

Logbatch

Composite Sample Start Date Time

Sample Nos

Stop Date Time

Field Data By: Date Time Fecal Date Time

pH Meter#: pH: DO Meter#: DO:

Temp: Cl: Flow: Units: Matrix: Liquid

Collection Method	Test	Analysis Requested	Bottle Type and Preservative
G / C	DW_NO3_1	Nitrate as N by IC Mdv	1 Liter Plastic 4 c
G / C	MM_ICPU_1	Multi Matrix IC Pick Up from Login	

Pd. $ 1100.00

Check #1042

Relinquished by: [signature] Date/Time: 12/28/09/1630

Received by: Date/Time:

Relinquished by: Date/Time:

Received by: Date/Time:

Relinquished by: Date/Time:

Received by: Date/Time:

FUEL SERVICES

McCoy & McCoy Laboratories, Inc.
P. O. Box 907
Madisonville, KY 42431
www.mccoylabs.com

Chain of Custody

Lexington KY 859-299-7775
Madisonville KY 270-821-7376
Paducah KY 270-444-8647
Pikeville KY 606-432-3104
Louisville KY 502-961-0001

Route: 54 Project SDWA

Collected by: MMLI/OPL

Collection Date: 12/28/09

Collection Time: 1620

Center Ridge Water Dist #2
Attn: William Duncan
69 Marguerite Blvd
Newconcord KY 42076

P. O. No:

PhoneFax: 270-436-6304

CE648504 Center Ridge WD #2 SECOND 0180509

Logbatch

Composite Sample Start Date Time

Stop Date Time

Sample Nos

Field Data By: MMLI/OPL Date 12/28/09 Time Fecal Date Time

pH Meter#: pH: 7.25 DO Meter#: DO:

Temp: 13.0 Cl: Flow: Units: Matrix: Liquid

Collection Method	Test	Analysis Requested	Bottle Type and Preservative
G / C	DW_MNICPMS_1	Manganese by ICP/MS	250 ml Plastic Nitric Acid 4 c
G / C	DW_AGICPMS_1	Silver by ICP/MS	250 ml Plastic Nitric Acid 4 c
G / C	DW_FEICPAES_1	Iron by ICP/AES	250 ml Plastic Nitric Acid 4 c
G / C	DW_HARDNESS_	Hardness as CaCO3 Mdv	250 ml Plastic Nitric Acid 4 c
G / C	DW_CUICPMS_1	Copper by ICP/MS	250 ml Plastic Nitric Acid 4 c
G / C	DW_CAICPAES_1	Calcium by ICP/AES	250 ml Plastic Nitric Acid 4 c
G / C	DW_ALICPMS_1	Aluminum by ICP/MS	250 ml Plastic Nitric Acid 4 c
G / C	DW_TURBIDITY_	Turbidity Mdv	1 Liter Plastic 4 c
G / C	DW_TDS_1	Total Dissolved Solids Mdv	1 Liter Plastic 4 c
G / C	DW_ALKTOT_1	Total Alkalinity by Titrimetry Mdv	1 Liter Plastic 4 c
G / C	DW_SO4IC_1	Sulfate by IC Mdv	1 Liter Plastic 4 c
G / C	DW_COLORPCU_	PCU Color Mdv	1 Liter Plastic 4 c
G / C	MM_ICPU_1	Multi Matrix IC Pick Up from Login	
G / C	DW_ZNICPMS_1	Zinc by ICP/MS	250 ml Plastic Nitric Acid 4 c
G / C	DW_FIC_1	Fluoride by IC Mdv	1 Liter Plastic 4 c
G / C	DW_HARDCA_1	Hardness, Calcium	
G / C	PH_FLD3	pH (Field)	
G / C	TEMPFLD3	Temperature, C (Field)	
G / C	DW_MBAS_1	MBAS as LAS Mdv	1 Liter Amber Wide Mouth Glass 4 c
G / C	DW_ALKBICAR_1	Alkalinity, Bicarbonate (HCO3) Mdv	1 Liter Plastic 4 c
G / C	DW_ALKCAR_1	Alkalinity, Carbonate (CO3) Mdv	1 Liter Plastic 4 c
G / C	DW_CL_1	Chloride by IC Mdv	1 Liter Plastic 4 c
G / C	DW_ALKPHENO_	Alkalinity, Pheno Mdv	1 Liter Plastic 4 c
G / C	DW_METPU_1	Drinking Water Metals Pick Up from Lo	
G / C	DW_ODOR_1	Odor Mdv	1 Liter Amber Wide Mouth Glass 4 c

Relinquished by: Date/Time: 12/28/09/1620

Received by: Date/Time:

Relinquished by: Date/Time:

Received by: Date/Time:

Relinquished by: Date/Time:

Received by: Date/Time:

FUEL SERVICES

SAMPLE CATEGORY = TC

KENTUCKY DIVISION OF WATER / DRINKING WATER BRANCH
BACTERIOLOGICAL ANALYSIS REPORT FORM

General Information – This Section To Be Completed By Collector

PWS ID: KY0180509

Compliance Period (MMYYYY): 122009

PWS Name: CRWD # 3

PWS Contact: Bill

Collection Date (MMDDYYYY): 12/8/2009
(All Samples Reported on this Form were Collected on this Date.)

PWS Address: 69 Marguerite New Concord Ky 42076

PWS Phone: 270-436-6304

Collector Name: William Duncan 12-28-09
Signature/Date

General Information – This Section To Be Completed By Lab

Lab ID: 0000 21

Lab Receipt Date (MMDDYYYY): 12/28/2009

Total Coliform Analysis Method Code: 028

Analysis Date (MMDDYYYY): 12/29/2009

E Coli Analysis Method Code:

Lab Analyst: Mindy Martin 12/30/09
Signature/Date

Lab Supervisor: 12/30/09
Signature/Date

Sample Information – This Section To Be Completed By Collector

Sample Type (RT, RP, or SP) (See Key)	Special Sample Reason (A, B, C, D, or E) (See Key)	Replacement Sample? (Y or Blank)	Location Code (See Instructions)	Repeat Location Code (DN, UP, or OR) (See Key)	Sample Time (24 hr)	Free Chlorine (Required for all disinfectants except Chloramine)	Total Chlorine (Required when disinfectant is Chloramine)
RT			005		0600	1.18	1.25
						.	.
						.	.
						.	.
						.	.
						.	.
						.	.
						.	.
						.	.
						.	.

Analysis Information – This Section To Be Completed By Lab

Lab Sample Number	Analysis Time (24 hr)	Result (Total Coliform Count - or - TNTC - or - CNFG) (See Key)	Total Coliform (P/A)	E Coli (P/A)	Lab Sample Number of Original Sample (Required for Repeat and/or Replacement Samples) (See Instructions)
AH17412	0740		A		

The signatories of this form certify by their signatures that collection and analysis of the water sample analyzed and the resulting data hereby submitted, were completed in accordance with the provisions of 401 KAR Chapter 8, specifically including but not limited to 401 KAR 8:200, Section 1 and 401 KAR 8:040; and that the data submitted on this form is a true and accurate report of the results of collection and analysis performed pursuant to the above-referenced regulations. Violations of 401 KAR Chapter 8 are subject to severe penalties prescribed in KRS 224.99-010, up to $25,000 fine per day per violation and in some cases a violation may subject the violator to prison.

BACTERIOLOGICAL ANALYSIS REPORT FROM KEY

Sample Type:	RT = Routine (For Compliance)	RP = Repeat (For Compliance)	SP = Special (Not for Compliance)
Special Sample Reason: (Only If Sample Type = SP)	A = Suspected Contamination B = New Plant, Modification, or Line Extension	C = Treatment Modification D = Study/Investigation	E = Line Break, Emergency Repair
Repeat Location Code: (Only If Sample Type = RP)	DN = Downstream	UP = Upstream	OR = Original Site

McCoy & McCoy Laboratories, Inc.
P. O. Box 907
Madisonville, KY 42431
www.mccoylabs.com

Chain of Custody

Lexington KY 859-299-7775
Paducah KY 270-444-6547
Louisville KY 502-961-0001
Madisonville KY 270-821-7375
Pikeville KY 606-432-3104

Route: 54 Project SDWA

Collected by: MMLI/OPL

Collection Date: 12/28/09

Collection Time: 1545

Center Ridge Water Dist #3
Attn: William Duncan
69 Marguerite Blvd
Newconcord KY 42076

P. O. No:

PhoneFax: 270-436-6304

CE648610 Center Ridge WD #3 Sodium 0180502 TPA

Logbatch

Composite Sample Start Date Time

Sample Nos

Stop Date Time

Field Data By: Date Time Fecal Date Time

pH Meter#: pH: DO Meter#: DO:

Temp: Cl: Flow: Units: Matrix: Liquid

Collection Method	Test	Analysis Requested	Bottle Type and Preservative
G / C	DW_NAICPAES_1	Sodium by ICP/AES	250 ml Plastic Nitric Acid 4 c
G / C	DW_METPU_1	Drinking Water Metals Pick Up from Lo	

Relinquished by: Derek [illegible] Date/Time: 12/28/09/1555

Received by: Date/Time:

Relinquished by: Date/Time:

Received by: Date/Time:

Relinquished by: Date/Time:

Received by: Date/Time:

FUEL SERVICES

McCoy & McCoy Laboratories, Inc.
Lexington KY
Paducah KY
Louisville KY

McCoy & McCoy Laboratories, Inc.
P. O. Box 807
Madisonville, KY 42431
www.mccoylabs.com

Chain of Custody

Lexington KY 859-299-7775
Madisonville KY 270-821-7375
Paducah KY 270-444-6547
Pikeville KY 606-432-3104
Louisville KY 502-961-0001

Route: 54 Project SDWA

Center Ridge Water Dist #3
Attn: William Duncan
69 Marguerite Blvd
Newconcord KY 42076

Collected by: MMLI/DPL

Collection Date: 12/28/09

Collection Time: 1545

P. O. No:

PhoneFax: 270-436-6304

CE648603 Center Ridge WD #3 SECOND 0180502

Logbatch

Composite Sample Start Date Time

Sample Nos

Stop Date Time

Field Data By: MMLI/DPL Date 12/28/09 Time Fecal Date Time

pH Meter#: pH: 7.10 DO Meter#: DO:

Temp: 13.5 Cl: Flow: Units: Matrix: Liquid

Collection Method	Test	Analysis Requested	Bottle Type and Preservative
G / C	DW_COLORPCU_	PCU Color Mdv	1 Liter Plastic 4 c
G / C	DW_ALKBICAR_1	Alkalinity, Bicarbonate (HCO3) Mdv	1 Liter Plastic 4 c
G / C	DW_MBAS_1	MBAS as LAS Mdv	1 Liter Amber Wide Mouth Glass 4 c
G / C	DW_ALKCAR_1	Alkalinity, Carbonate (CO3) Mdv	1 Liter Plastic 4 c
G / C	DW_ALKPHENO_	Alkalinity, Pheno Mdv	1 Liter Plastic 4 c
G / C	DW_CL_1	Chloride by IC Mdv	1 Liter Plastic 4 c
G / C	DW_FIC_1	Fluoride by IC Mdv	1 Liter Plastic 4 c
G / C	DW_ODOR_1	Odor Mdv	1 Liter Amber Wide Mouth Glass 4 c
G / C	DW_SO4IC_1	Sulfate by IC Mdv	1 Liter Plastic 4 c
G / C	DW_ALKTOT_1	Total Alkalinity by Titrimetry Mdv	1 Liter Plastic 4 c
G / C	DW_TDS_1	Total Dissolved Solids Mdv	1 Liter Plastic 4 c
G / C	DW_TURBIDITY_	Turbidity Mdv	1 Liter Plastic 4 c
G / C	DW_ALICPMS_1	Aluminum by ICP/MS	250 ml Plastic Nitric Acid 4 c
G / C	DW_CAICPAES_1	Calcium by ICP/AES	250 ml Plastic Nitric Acid 4 c
G / C	DW_HARDNESS_	Hardness as CaCO3 Mdv	250 ml Plastic Nitric Acid 4 c
G / C	DW_FEICPAES_1	Iron by ICP/AES	250 ml Plastic Nitric Acid 4 c
G / C	DW_MNICPMS_1	Manganese by ICP/MS	250 ml Plastic Nitric Acid 4 c
G / C	DW_AGICPMS_1	Silver by ICP/MS	250 ml Plastic Nitric Acid 4 c
G / C	MM_ICPU_1	Multi Matrix IC Pick Up from Login	
G / C	DW_ZNICPMS_1	Zinc by ICP/MS	250 ml Plastic Nitric Acid 4 c
G / C	DW_CUICPMS_1	Copper by ICP/MS	250 ml Plastic Nitric Acid 4 c
G / C	DW_HARDCA_1	Hardness, Calcium	
G / C	DW_METPU_1	Drinking Water Metals Pick Up from Lo	
G / C	TEMPFLD3	Temperature, C (Field)	
G / C	PH_FLD3	pH (Field)	

Relinquished by: Dark P Lat Date/Time: 12/28/09/1555

Received by: Date/Time:

Relinquished by: Date/Time:

Received by: Date/Time:

Relinquished by: Date/Time:

Received by: Date/Time:

FUEL SERVICES

McCoy & McCoy Laboratories, Inc.
P. O. Box 907
Madisonville, KY 42431
www.mccoylabs.com

Chain of Custody

Lexington KY 859-299-7775
Paducah KY 270-444-6547
Louisville KY 502-961-0001
Madisonville KY 270-821-7375
Pikeville KY 606-432-3104

Route: 54 Project SDWA

Center Ridge Water Dist #3
Attn: William Duncan
69 Marguerite Blvd
Newconcord KY 42076

Collected by: MMLI/DPL

Collection Date: 12/28/09

Collection Time: 1515

P. O. No:

PhoneFax: 270-436-6304

CE648602 Center Ridge WD #3 Nitrate 0180502

Logbatch

Composite Sample Start Date Time

Sample Nos

Stop Date Time

Field Data By: Date Time Fecal Date Time

pH Meter#: pH: DO Meter#: DO:

Temp: Cl: Flow: Units: Matrix: Liquid

Collection Method	Test	Analysis Requested	Bottle Type and Preservative
G / C	DW_NO3_1	Nitrate as N by IC Mdv	1 Liter Plastic 4 c
G / C	MM_ICPU_1	Multi Matrix IC Pick Up from Login	

Relinquished by: Derek [signature] Date/Time: 12/28/09/ 1525

Received by: Date/Time:

Relinquished by: Date/Time:

Received by: Date/Time:

Relinquished by: Date/Time:

Received by: Date/Time:

FUEL SERVICES

SAMPLE CATEGORY = TC

KENTUCKY DIVISION OF WATER / DRINKING WATER BRANCH
BACTERIOLOGICAL ANALYSIS REPORT FORM

General Information – This Section To Be Completed By Collector

PWS ID: KY0183106

PWS Name: CRWD # 4

PWS Contact: Bill

PWS Address: 69 Marguerite New Concord Ky 42076

PWS Phone: 270-436-6304

Compliance Period (MMYYYY): 122009

Collection Date (MMDDYYYY): 12282009
(All Samples Reported on this Form were Collected on this Date.)

Collector Name: William Duncan 12-28-09
Signature/Date

General Information – This Section To Be Completed By Lab

Lab ID: 00031

Lab Receipt Date (MMDDYYYY): 12282009

Analysis Date (MMDDYYYY): 12282009

Total Coliform Analysis Method Code: 028

E Coli Analysis Method Code:

Lab Analyst: Mindy Martin 12/30/09
Signature/Date

Lab Supervisor: [signature] 12/30/09
Signature/Date

Sample Information – This Section To Be Completed By Collector

Sample Type (RT, RP, or SP) (See Key)	Special Sample Reason (A, B, C, D, or E) (See Key)	Replacement Sample? (Y or Blank)	Location Code (See Instructions)	Repeat Location Code (DN, UP, or OR) (See Key)	Sample Time (24 hr)	Free Chlorine (Required for all disinfectants except Chloramine)	Total Chlorine (Required when disinfectant is Chloramine)
RT			020		0800	1.11	11.18
						.	.
						.	.
						.	.
						.	.
						.	.
						.	.
						.	.
						.	.
						.	.

Analysis Information – This Section To Be Completed By Lab

Lab Sample Number	Analysis Time (24 hr)	Result (Total Coliform Count - or - TNTC - or - CNFG) (See Key)	Total Coliform (P/A)	E Coli (P/A)	Lab Sample Number of Original Sample (Required for Repeat and/or Replacement Samples) (See Instructions)
AA1741B	0740		A		

The signatories of this form certify by their signatures that collection and analysis of the water sample analyzed and the resulting data hereby submitted, were completed in accordance with the provisions of 401 KAR Chapter 8, specifically including but not limited to 401 KAR 8:200, Section 1 and 401 KAR 8:040; and that the data submitted on this form is a true and accurate report of the results of collection and analysis performed pursuant to the above-referenced regulations. Violations of 401 KAR Chapter 8 are subject to severe penalties prescribed in KRS 224.99-010, up to $25,000 fine per day per violation and in some cases a violation may subject the violator to prison.

BACTERIOLOGICAL ANALYSIS REPORT FROM KEY

Sample Type:	RT = Routine (For Compliance)	RP = Repeat (For Compliance)	SP = Special (Not for Compliance)
Special Sample Reason: (Only If Sample Type = SP)	A = Suspected Contamination B = New Plant, Modification, or Line Extension	C = Treatment Modification D = Study/Investigation	E = Line Break, Emergency Repair
Repeat Location Code:	DN = Downstream	UP = Upstream	OR = Original Site

Madisonville, KY 42431
www.mccoylabs.com

Madisonville KY 270-821-7375 Pikeville KY 606-432-3104

Route: 54 Project SDWA

Center Ridge Water District #4
Attn: William Duncan
69 Marguerite Blvd
Newconcord KY 42076

Collected by: MMLI/DPL

Collection Date: 12/28/09

Collection Time: 1505

P. O. No:

PhoneFax: 270-436-6304

CE648301 Center Ridge WD #4 Nitrate 0183106

Logbatch

Composite Sample Start Date Time

Sample Nos

Stop Date Time

Field Data By: Date Time Fecal Date Time

pH Meter#: pH: DO Meter#: DO:

Temp: Cl: Flow: Units: Matrix: Liquid

Collection Method	Test	Analysis Requested	Bottle Type and Preservative
G/C	MM_ICPU_1	Multi Matrix IC Pick Up from Login	
G/C	DW_NO3_1	Nitrate as N by IC Mdv	1 Liter Plastic 4 c

Relinquished by: Date/Time: 12/28/09/1510

Received by: Date/Time:

Relinquished by: Date/Time:

Received by: Date/Time:

Relinquished by: Date/Time:

Received by: Date/Time:

FUEL SERVICES

P. O. Box 907
Madisonville, KY 42431
www.mccoylabs.com

McCOY LABORATORY

859-299-7775 Madisonville KY
270-821-7375
270-444-6547 Pikeville KY
606-432-3104
502-981-0001

Route: 54 Project SDWA

Collected by: MMI / DPL

Collection Date: 12/22/09

Collection Time: 1505

Center Ridge Water District #4
Attn: William Duncan
69 Marguerite Blvd
Newconcord KY 42076

P. O. No:

PhoneFax: 270-436-6304

CE648302 Center Ridge WD #4 Secondary 0183106

Logbatch

Composite Sample Start Date Time

Sample Nos

Stop Date Time

Field Data By: MMI / DPL Date 12/22/09 Time 1505 Fecal Date Time

pH Meter#: pH: 7.25 DO Meter#: DO:

Temp: 15.6°C Cl: Flow: Units: Matrix: Liquid

Collection Method	Test	Analysis Requested	Bottle Type and Preservative
G / C	DW_FIC_1	Fluoride by IC Mdv	1 Liter Plastic 4 c
G / C	DW_ODOR_1	Odor Mdv	1 Liter Amber Wide Mouth Glass 4 c
G / C	DW_ALKPHENO_	Alkalinity, Pheno Mdv	1 Liter Plastic 4 c
G / C	DW_ALKCAR_1	Alkalinity, Carbonate (CO3) Mdv	1 Liter Plastic 4 c
G / C	DW_ALKBICAR_1	Alkalinity, Bicarbonate (HCO3) Mdv	1 Liter Plastic 4 c
G / C	DW_CL_1	Chloride by IC Mdv	1 Liter Plastic 4 c
G / C	DW_MBAS_1	MBAS as LAS Mdv	1 Liter Amber Wide Mouth Glass 4 c
G / C	TEMPFLD3	Temperature, C (Field)	
G / C	PH_FLD3	pH (Field)	
G / C	MM_ICPU_1	Multi Matrix IC Pick Up from Login	
G / C	DW_COLORPCU_	PCU Color Mdv	1 Liter Plastic 4 c
G / C	DW_METPU_1	Drinking Water Metals Pick Up from Lo	
G / C	DW_HARDCA_1	Hardness, Calcium	
G / C	DW_SO4IC_1	Sulfate by IC Mdv	1 Liter Plastic 4 c
G / C	DW_ALKTOT_1	Total Alkalinity by Titrimetry Mdv	1 Liter Plastic 4 c
G / C	DW_TDS_1	Total Dissolved Solids Mdv	1 Liter Plastic 4 c
G / C	DW_TURBIDITY_	Turbidity Mdv	1 Liter Plastic 4 c
G / C	DW_ALICPMS_1	Aluminum by ICP/MS	250 ml Plastic Nitric Acid 4 c
G / C	DW_CAICPAES_1	Calcium by ICP/AES	250 ml Plastic Nitric Acid 4 c
G / C	DW_CUICPMS_1	Copper by ICP/MS	250 ml Plastic Nitric Acid 4 c
G / C	DW_HARDNESS_	Hardness as CaCO3 Mdv	250 ml Plastic Nitric Acid 4 c
G / C	DW_FEICPAES_1	Iron by ICP/AES	250 ml Plastic Nitric Acid 4 c
G / C	DW_MNICPMS_1	Manganese by ICP/MS	250 ml Plastic Nitric Acid 4 c
G / C	DW_ZNICPMS_1	Zinc by ICP/MS	250 ml Plastic Nitric Acid 4 c
G / C	DW_AGICPMS_1	Silver by ICP/MS	250 ml Plastic Nitric Acid 4 c

Relinquished by: Date/Time: 12/28/09/1510

Received by: Date/Time:

Relinquished by: Date/Time:

Received by: Date/Time:

Relinquished by: Date/Time:

Received by: Date/Time:

FUEL SERVICES