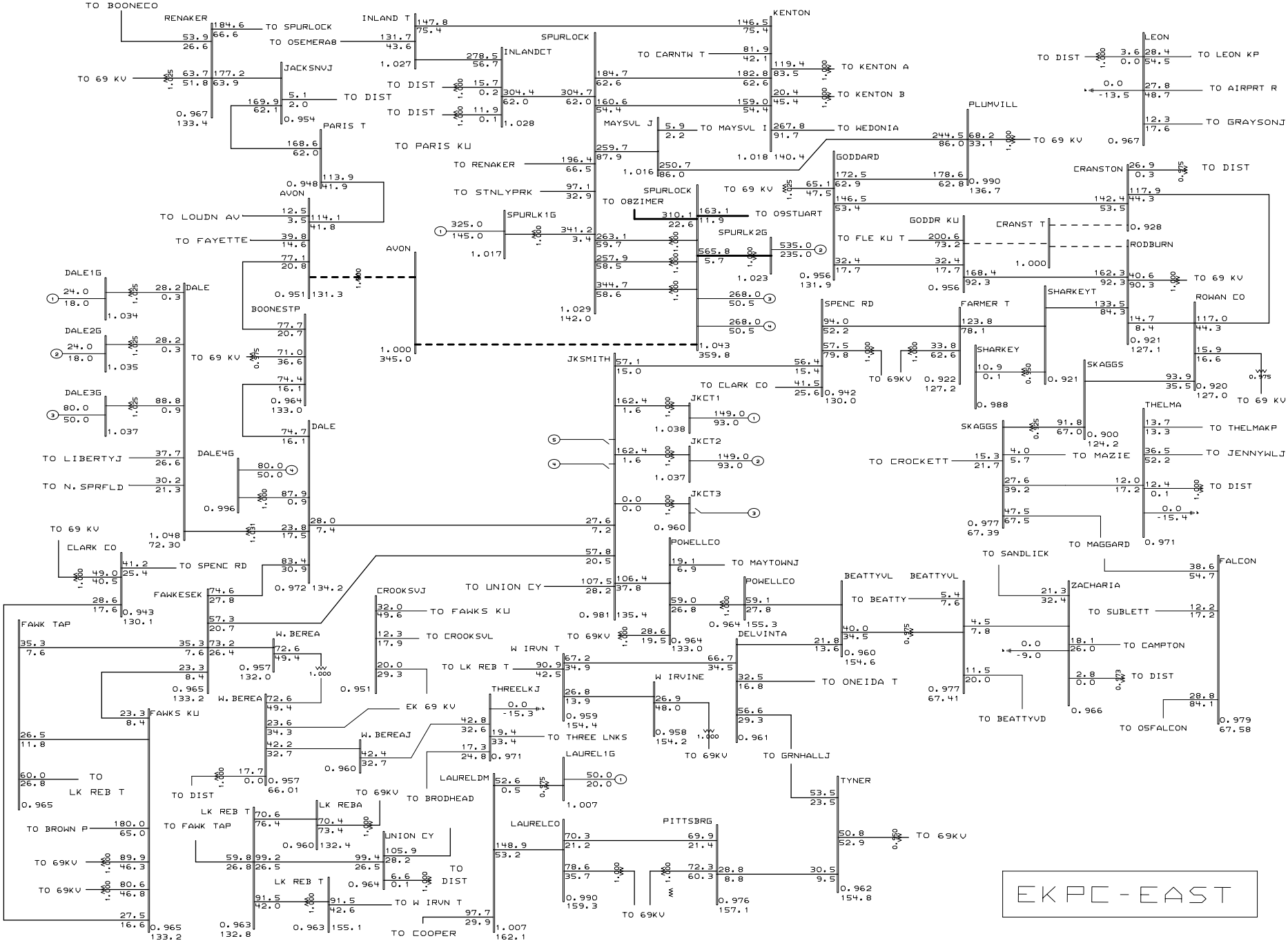

General Electric International, Inc. PSLF Program MVA/Pct Thu Mar 28 09:00:10 2002

EAST KENTUCKY Power Cooperative

2010/11 Winter LGEE-EKPC Base Case 4/20/01 PGK-MKS;2-JKSMITH CT'S ON IMPORT FROM NORTH;GILBERT #3,4 GEN & CONSTRUCTION CRANSTON-ROWAN CO 138 KV ADDED

SPURLOCK-AVON 345 KV OUT;AUTO CAP SWITCHING

g34-10e.drw
10wg34-7.sav
Rating = 4