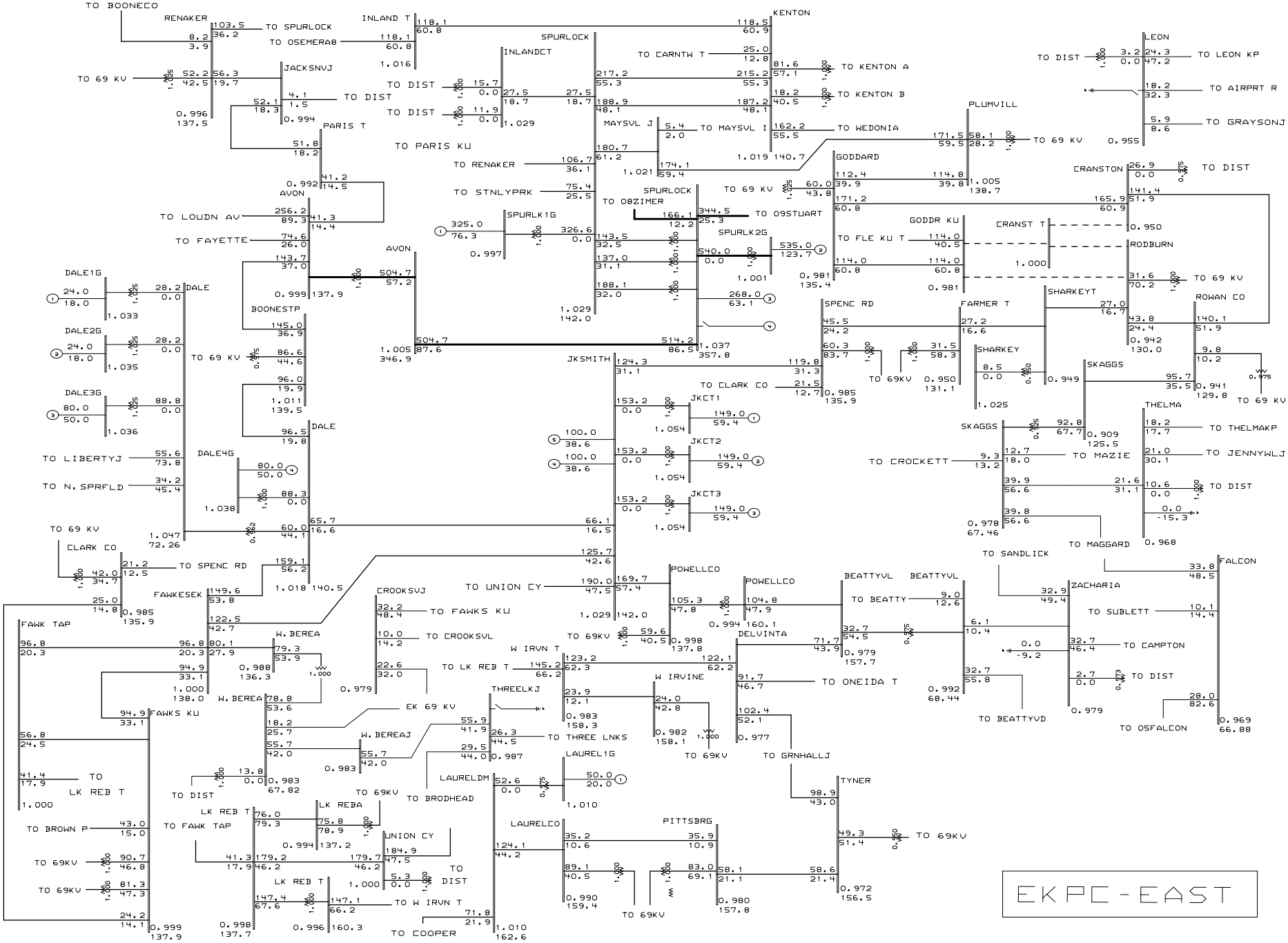
EKPC-EAST
TO BOONECO
RENAKER
TO SPURLOCK
TO OSEMERA8
INLAND T
KENTON
SPURLOCK
INLANDCT
TO CARNTW T
TO KENTON A
TO KENTON B
LEON
TO DIST
TO LEON KP
TO AIRPRT R
TO GRAYSONJ
TO 69 KV
JACKSNVJ
TO DIST
PARIS T
TO PARIS KU
MAYSVL J
TO MAYSVL I
TO WEDONIA
PLUMVILL
TO RENAKER
TO STNLYPRK
TO 08ZIMER
TO 09STUART
GODDARD
CRANSTON
AVON
TO LOUDN AV
TO FAYETTE
SPURLK1G
SPURLK2G
GODDR KU
CRANST T
TO FLE KU T
RODBURN
DALE1G
DALE2G
DALE3G
DALE
BOONESTP
TO 69 KV
SPENC RD
FARMER T
SHARKEYT
ROWAN CO
SHARKEY
SKAGGS
JKSMITH
TO CLARK CO
JKCT1
JKCT2
JKCT3
THELMA
TO THELMAKP
TO MAZIE
TO JENNYWLJ
TO CROCKETT
TO LIBERTYJ
TO N. SPRFLD
DALE4G
CLARK CO
TO SPENC RD
FAWKESEK
TO MAGGARD
TO SANDLICK
FALCON
ZACHARIA
TO SUBLETT
TO CAMPTON
TO OSFALCON
TO UNION CY
POWELLCO
BEATTYVL
TO BEATTY
TO BEATTYVD
CROOKSVJ
TO FAWKS KU
TO CROOKSVL
FAWK TAP
W. BEREA
W IRVN T
TO LK REB T
DELVINTA
TO ONEIDA T
W IRVINE
EK 69 KV
THREELKJ
TO THREE LNKS
W. BEREAJ
FAWKS KU
TO GRNHALLJ
LAUREL1G
LAURELDM
TO BROADHEAD
TYNER
LK REB T
LK REBA
TO FAWK TAP
TO BROWN P
UNION CY
LAURELCO
PITTSBRG
TO 69KV
TO DIST
TO W IRVN T
TO COOPER
General Electric International, Inc.
PSLF Program
MVA/Pct
Mon Apr 08 12:43:24 2002
EAST KENTUCKY
Power Cooperative
2005-06 Winter LGEE-EKPC Base Case 12/26/2001 DWA
INCLUDES GILBERT #3 GEN AND CONSTR;IMPORT FROM NORTH;UPDATED BASE CASE
CRANSTON-ROWAN CO 138 KV ADDED;GODDARD-RODBURN 138 KV OUT;AUTO CAP SWITCHING
g34-05e.drw
06wg3.sav
Rating = 4