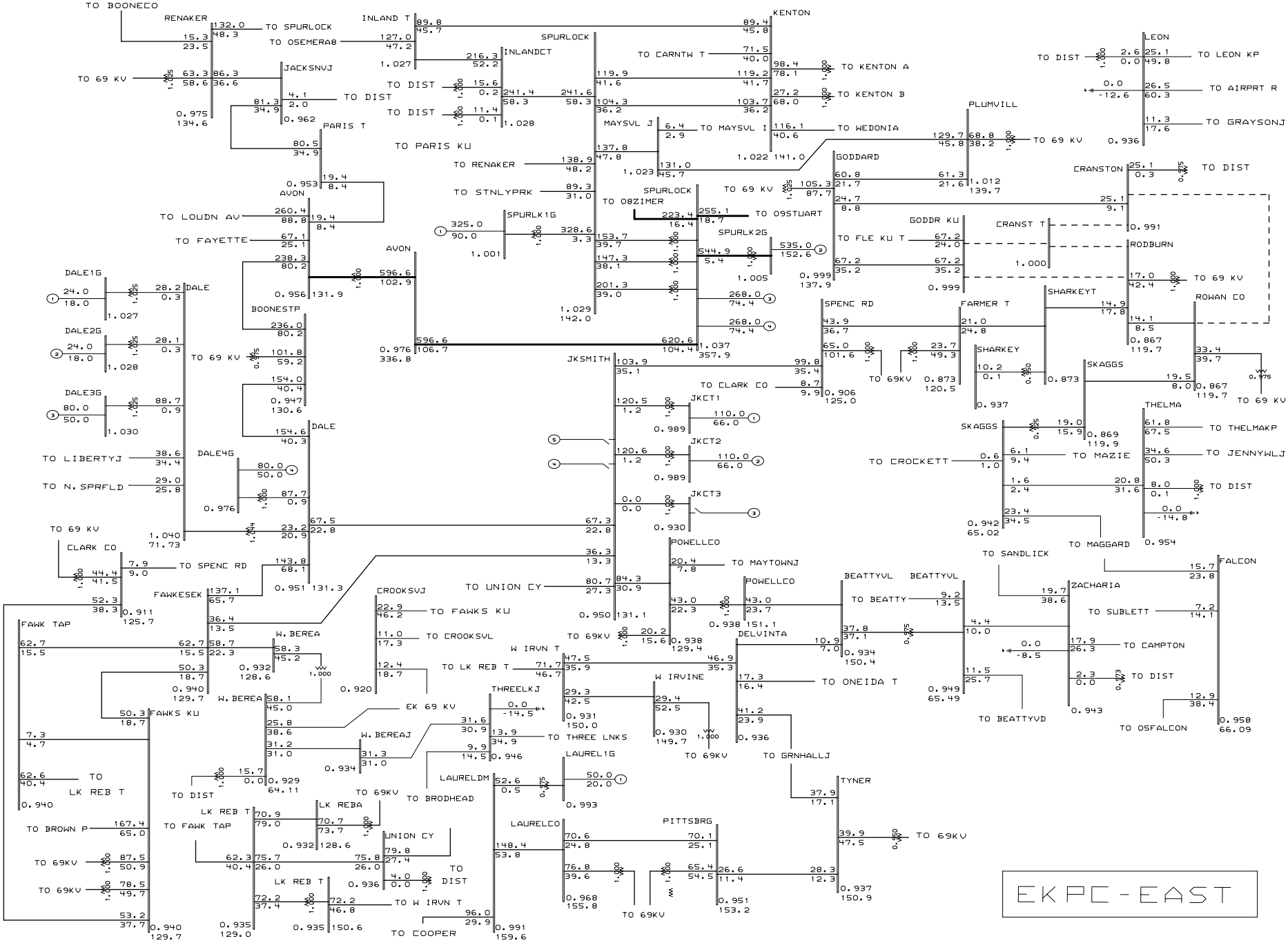

General Electric International, Inc. PSLF Program MVA/Pct Wed Mar 27 13:16:22 2002

EAST KENTUCKY Power Cooperative

2010 Summer LGEE-EKPC Base Case 4/19/01 PGK-MKS;2-JKSMITH CT'S ON IMPORT FROM NORTH;GILBERT #3,4 GEN & CONSTRUCTION WITHOUT CRANSTON-ROWAN CO 138 KV

GODDARD-RODBURN 138 KV OUT;AUTO CAP SWITCHING

g34-10e.drw
10sg34-7.sav
Rating = 2