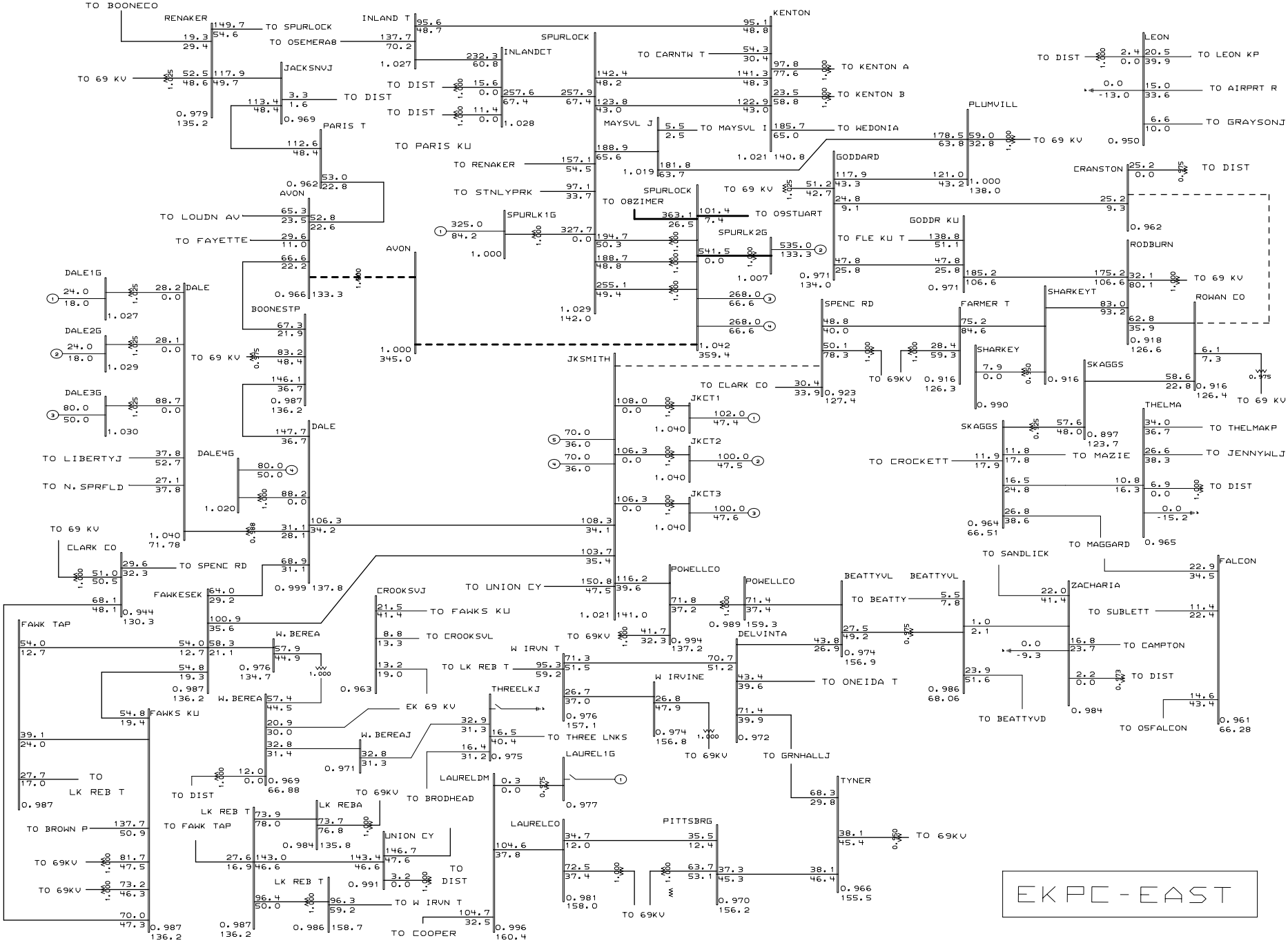

General Electric International, Inc. PSLF Program MVA/Pct Mon Apr 08 15:45:57 2002

EAST KENTUCKY Power Cooperative	2005 Summer LGEE-EKPC Base Case 12/3/01 DWA;UPDATED BASE CASE INCLUDES GILBERT #3/SPURLOCK #4 GEN AND CONSTRUCTION SPURLOCK-AVON 345 KV OUT;AUTO CAP SWITCHING	WITHOUT JKSMITH-SPENCER ROAD 138 KV LINE	g34-05e.drw 05sg34.sav Rating = 2