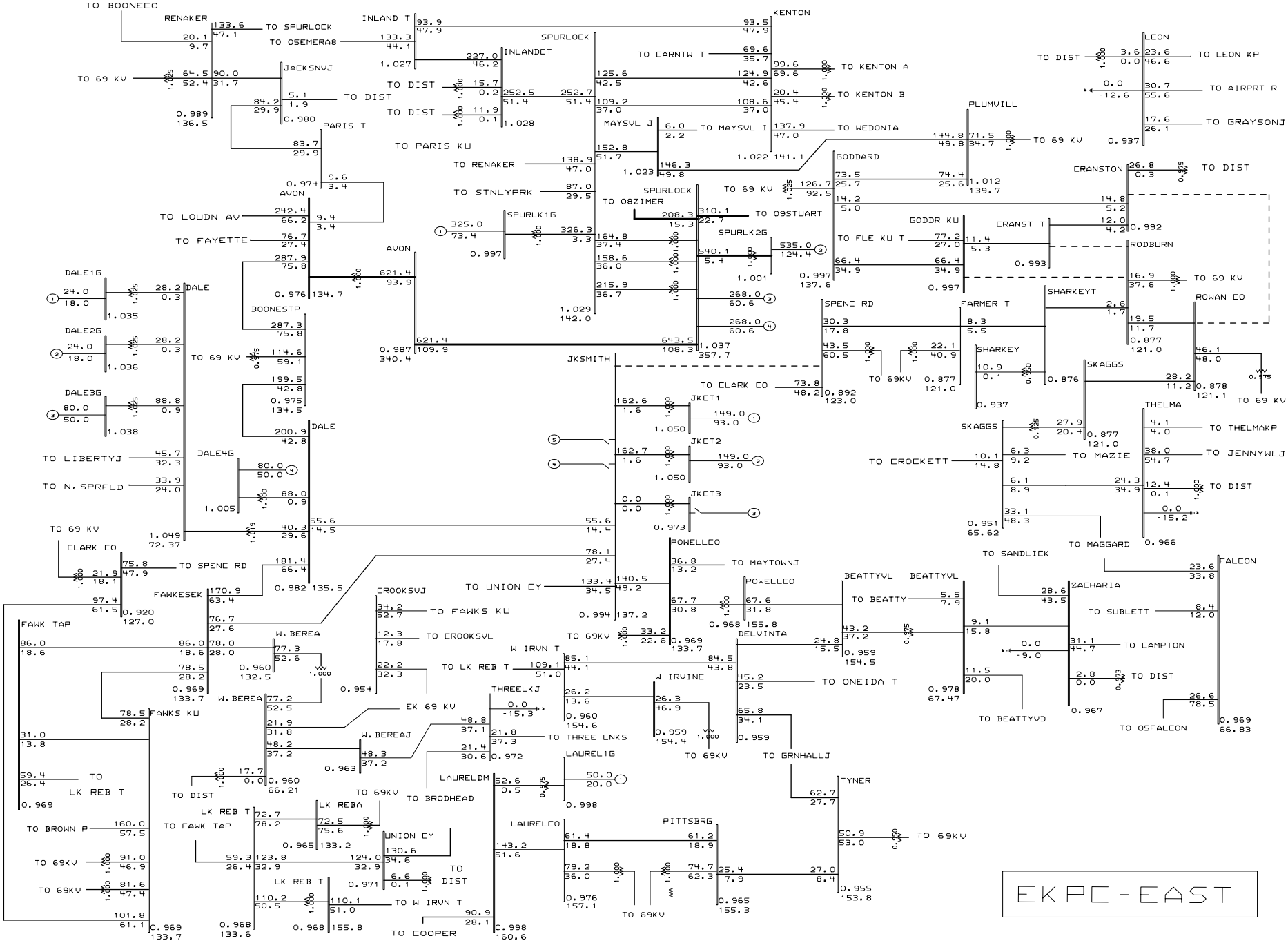

General Electric International, Inc. PSLF Program MVA/Pct Wed Mar 27 09:38:17 2002

EAST KENTUCKY Power Cooperative

2010/11 Winter LGEE-EKPC Base Case 4/20/01 PGK-MKS;2-JKSMITH CT'S ON IMPORT FROM NORTH;GILBERT #3,4 GEN+CONSTR;CRANSTON TAP 138KV ADDED (TAP GODDARD-RODBURN);CRANSTON TAP-RODBURN 795MCM;GODDARD-HILDA 556.5 MCM

CAPS ADD(MVAR);ROWAN CO(14.29),ELLIOTTVL(12.25);W/O JK-SPENCER 138KV CRANSTON TAP-RODBURN 138 KV OUT;AUTO CAP SWITCHING

g34-10e.drw
10wg34-7a.sav
Rating = 4