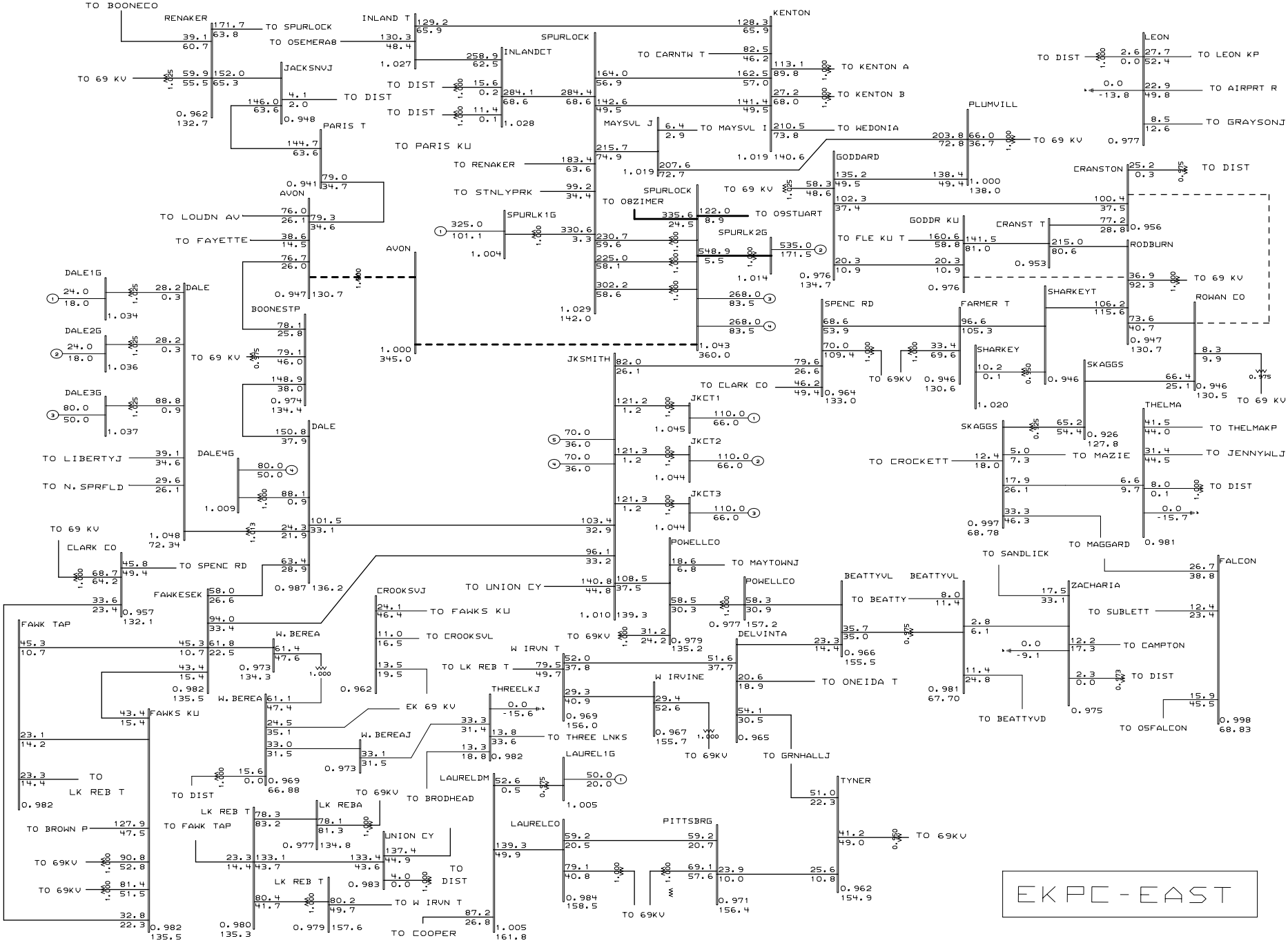

General Electric International, Inc. PSLF Program MVA/Pct Mon Apr 08 15:39:25 2002

EAST KENTUCKY Power Cooperative

2010 Summer LGEE-EKPC Base Case 4/19/01 PGK-MKS
GILBERT #3/SPURLOCK #4 GEN+CONSTR;CRANSTON TAP 138KV ADDED
(TAP GODDARD-RODBURN);CRANSTON TAP-RODBURN 795MCM;GODDARD-HILDA 556.5 MCM

CAPS ADD(MVAR);ROWAN CO(14,29),ELLIOTTVL(12,25)
SPURLOCK-AVON 345 KV OUT;AUTO CAP SWITCHING

g34-10e.drw
10sg34-a.sav
Rating = 2