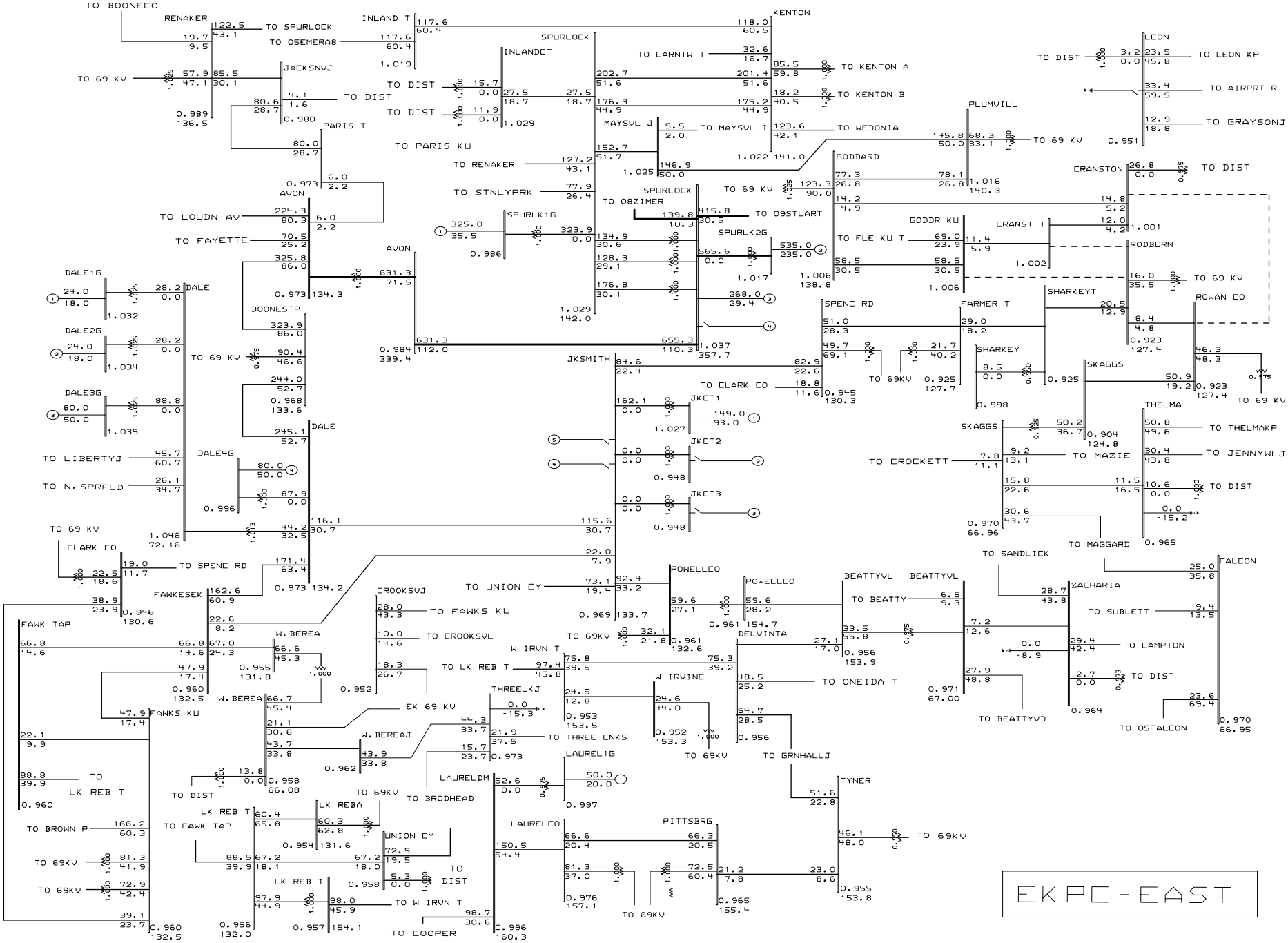
EKPC-EAST
TO BOONECO
RENAKER
TO SPURLOCK
TO OSEMERA8
INLAND T
KENTON
SPURLOCK
INLANDCT
TO CARNTW T
TO KENTON A
TO KENTON B
LEON
TO DIST
TO LEON KP
TO AIRPRT R
TO GRAYSONJ
TO 69 KV
JACKSNVJ
TO DIST
MAYSVL J
TO MAYSVL I
TO WEDONIA
PLUMVILL
TO PARIS KU
PARIS T
TO RENAKER
TO STNLYPRK
GODDARD
CRANSTON
SPURLOCK
TO 08ZIMER
TO 09STUART
AVON
TO LOUDN AV
SPURLK1G
SPURLK2G
GODDR KU
CRANST T
TO FAYETTE
TO FLE KU T
RODBURN
DALE1G
DALE
BOONESTP
SPENC RD
FARMER T
SHARKEYT
ROWAN CO
DALE2G
TO 69 KV
JKSMITH
TO CLARK CO
SHARKEY
SKAGGS
DALE3G
JKCT1
THELMA
TO LIBERTYJ
DALE4G
JKCT2
SKAGGS
TO THELMAKP
TO N. SPRFLD
JKCT3
TO CROCKETT
TO MAZIE
TO JENNYWLJ
TO DIST
TO 69 KV
CLARK CO
TO MAGGARD
TO SPENC RD
TO SANDLICK
FALCON
FAWKESEK
CROOKSVJ
POWELLCO
BEATTYVL
ZACHARIA
TO UNION CY
TO FAWKS KU
TO SUBLETT
FAWK TAP
W. BEREA
TO CROOKSVL
TO 69KV
DELVINTA
TO CAMPTON
W IRVN T
TO LK REB T
W IRVINE
TO ONEIDA T
TO DIST
EK 69 KV
THREELKJ
TO THREE LNKS
FAWKS KU
W. BEREAJ
TO BEATTYVD
TO OSFALCON
TO GRNHALLJ
LAUREL1G
TO DIST
LAURELDM
TO BRODHEAD
TYNER
TO LK REB T
LK REB T
LK REBA
TO 69KV
TO BROWN P
TO FAWK TAP
LAURELCO
PITTSBRG
UNION CY
TO 69KV
TO DIST
LK REB T
TO W IRVN T
TO COOPER
General Electric International, Inc.
PSLF Program
MVA/Pct
Wed Mar 27 10:22:24 2002
EAST KENTUCKY Power Cooperative
2005/06 Winter LGEE-EKPC Base Case 12/26/01 DWA;1-JKSMITH CT ON
IMPORT FROM NORTH;GILBERT #3 GEN & CONSTR;CRANSTON TAP 138KV ADDED
(TAP GODDARD-RODBURN);CRANSTON TAP-RODBURN 795MCM;GODDARD-HILDA 556.5 MCM
CAPS ADD(MVAR);ROWAN CO(14.29),ELLIOTTVL(12.25)
CRANSTON TAP-RODBURN 138 KV OUT;AUTO CAP SWITCHING
g34-05e.drw
06wg3-7a.sav
Rating = 4