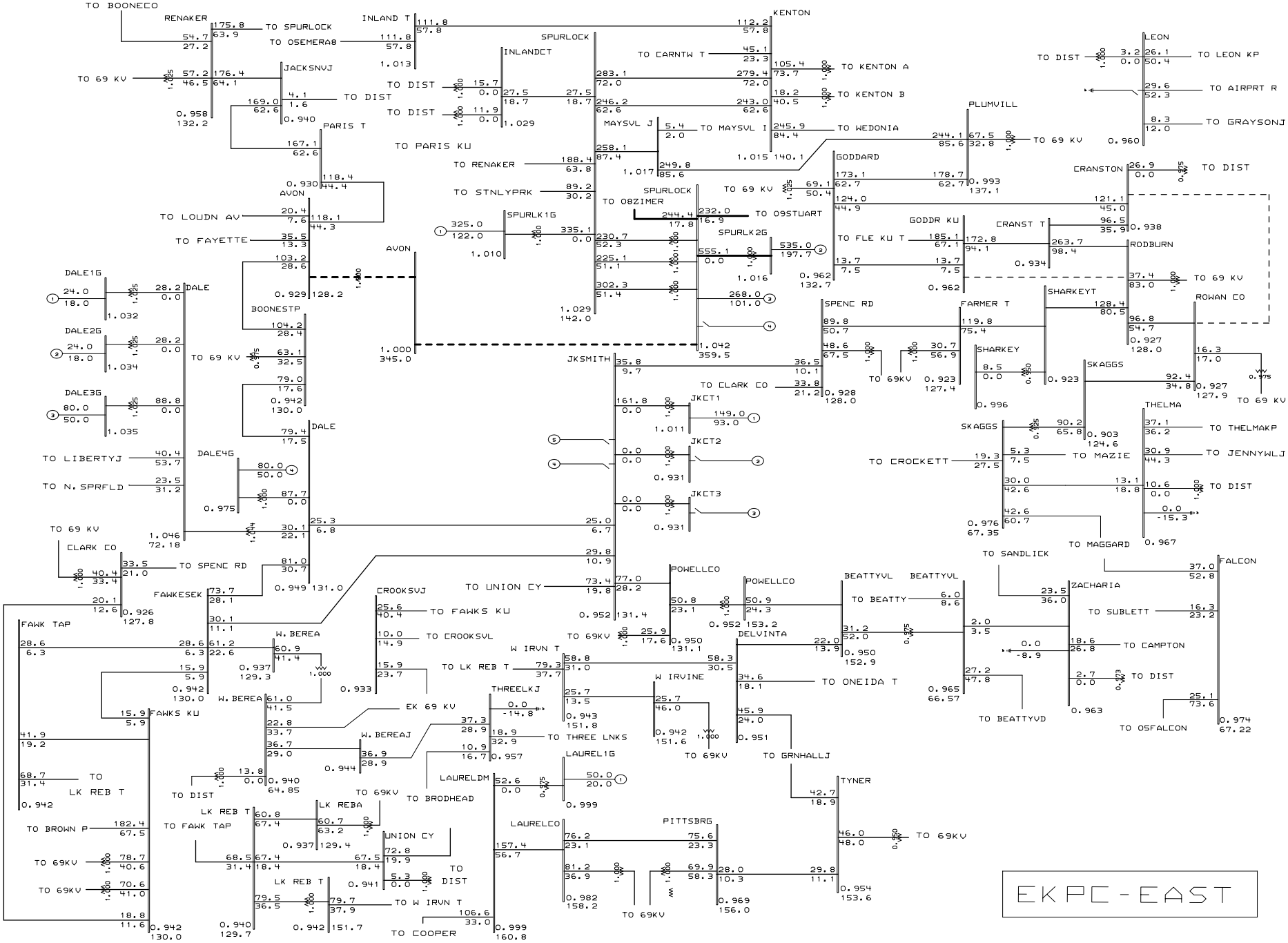

General Electric International, Inc. PSLF Program MVA/Pct Wed Mar 27 10:22:00 2002

EAST KENTUCKY Power Cooperative

2005/06 Winter LGEE-EKPC Base Case 12/26/01 DWA;1-JKSMITH CT ON
IMPORT FROM NORTH;GILBERT #3 GEN & CONSTR;CRANSTON TAP 138KV ADDED
(TAP GODDARD-RODBURN);CRANSTON TAP-RODBURN 795MCM;GODDARD-HILDA 556.5 MCM

CAPS ADD(MVAR);ROWAN CO(14.29),ELLIOTTVL(12.25)
SPURLOCK-AVON 345 KV OUT;AUTO CAP SWITCHING

g34-05e.drw
06wg3-7a.sav
Rating = 4