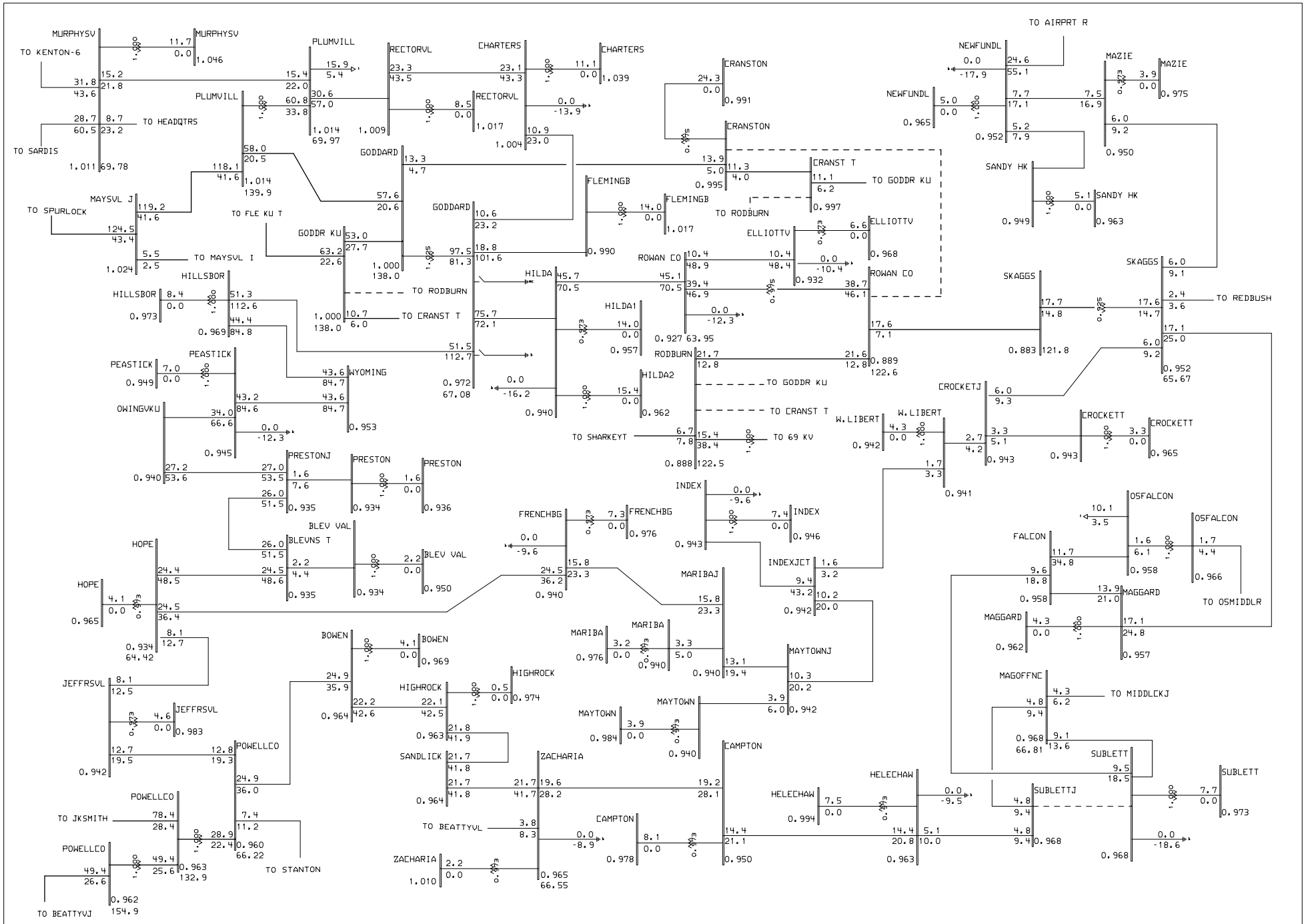

General Electric International, Inc. PSLF Program MVA/Pct Wed Mar 27 10:05:35 2002

EAST KENTUCKY Power Cooperative

2005 Summer LGEE-EKPC Base Case 12/3/01 DWA;1-JKSMITH CT ON
IMPORT FROM NORTH;GILBERT #3 GEN+CONSTR;CRANSTON TAP 138KV ADDED
(TAP GODDARD-RODBURN);CRANSTON TAP-RODBURN 795MCM;GODDARD-HILDA 556.5 MCM

CAPS ADD(MVAR);ROWAN CO(14.29),ELLIOTTVL(12.25);W/O JK-SPENCER 138KV
CRANSTON TAP-RODBURN 138 KV OUT;AUTO CAP SWITCHING

goddpcskgs05.drw
05sg3-7a.sav
Rating = 2