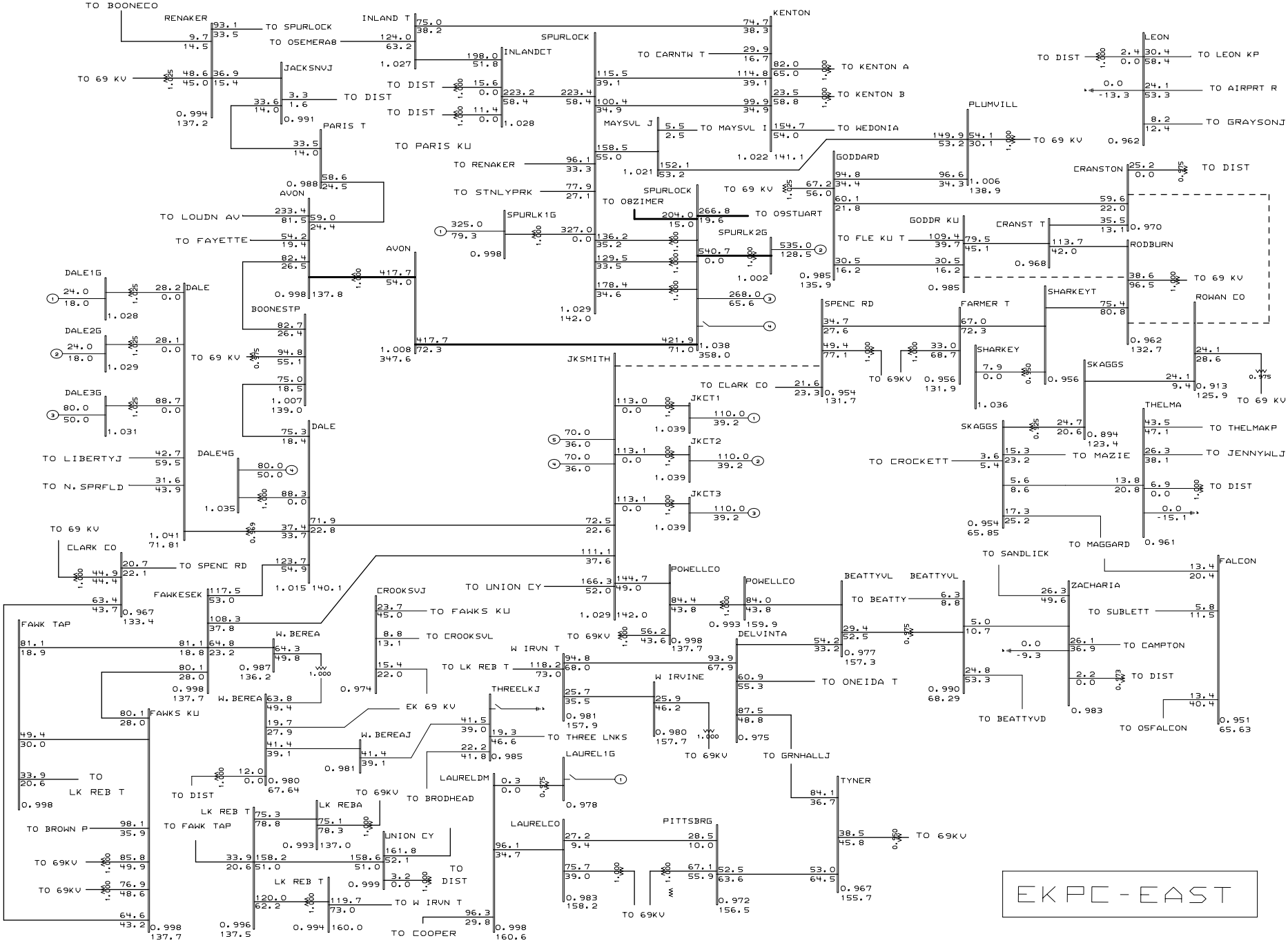

General Electric International, Inc. PSLF Program MVA/Pct Mon Apr 08 14:05:23 2002

EAST KENTUCKY Power Cooperative

2005 Summer LGEE-EKPC Base Case 12/3/01 DWA
GILBERT #3 GEN+CONSTR;CRANSTON TAP 138KV ADDED(TAP GODDARD-RODBURN)
CRANSTON TAP-RODBURN 795MCM;GODDARD-HILDA 556.5 MCM

CAPS ADD(MVAR);ROWAN CO(14.29),ELLIOTTVL(12.25);W/O JK-SPENCER 138KV
RODBURN-ROWAN CO 138 KV OUT;AUTO CAP SWITCHING

g34-05e.drw
05sg3-a.sav
Rating = 2