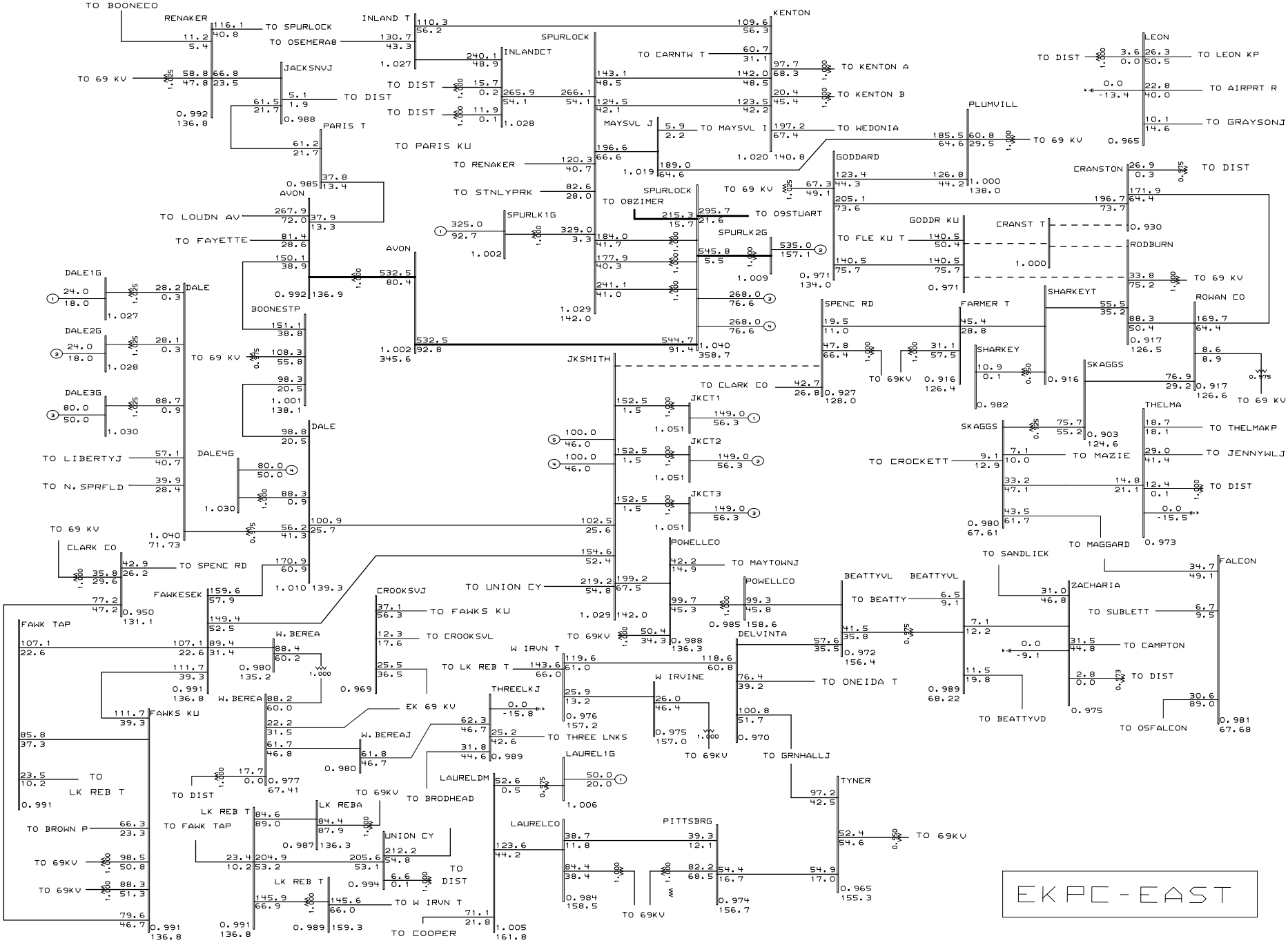

General Electric International, Inc. PSLF Program MVA/Pct Mon Apr 08 15:37:21 2002

EAST KENTUCKY Power Cooperative

2010/11 Winter LGEE-EKPC Base Case 4/20/01 PGK-MKS
GILBERT #3/SPURLOCK #4 GEN & CONSTRUCTION
CRANSTON-ROWAN CO 138 KV ADDED

GODDARD-RODBURN 138 KV OUT;AUTO CAP SWITCHING
WITHOUT JKSMITH-SPENCER ROAD 138 KV

g34-10e.drw
10wg34.sav
Rating = 4