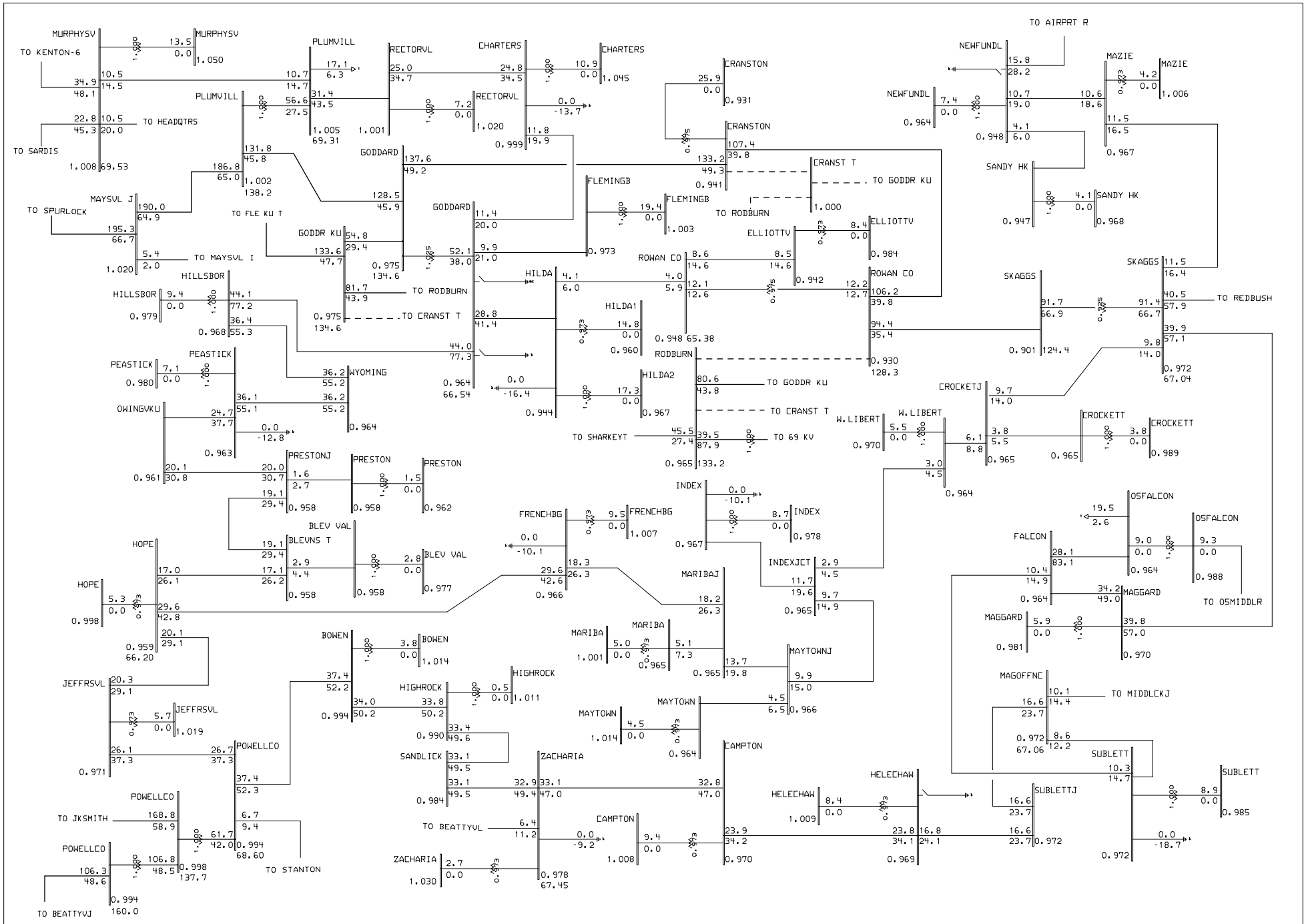

General Electric International, Inc. PSLF Program MVA/Pct Mon Apr 08 12:43:33 2002

EAST KENTUCKY Power Cooperative

2005-06 Winter LGEE-EKPC Base Case 12/26/2001 DWA
INCLUDES GILBERT #3 GEN AND CONSTR;IMPORT FROM NORTH;UPDATED BASE CASE
CRANSTON-ROWAN CO 138 KV ADDED;RODBURN-ROWAN COUNTY 138 KV OUT;AUTO CAP SWITCHIN

goddpcskgs05.drw
06wg3.sav
Rating = 4