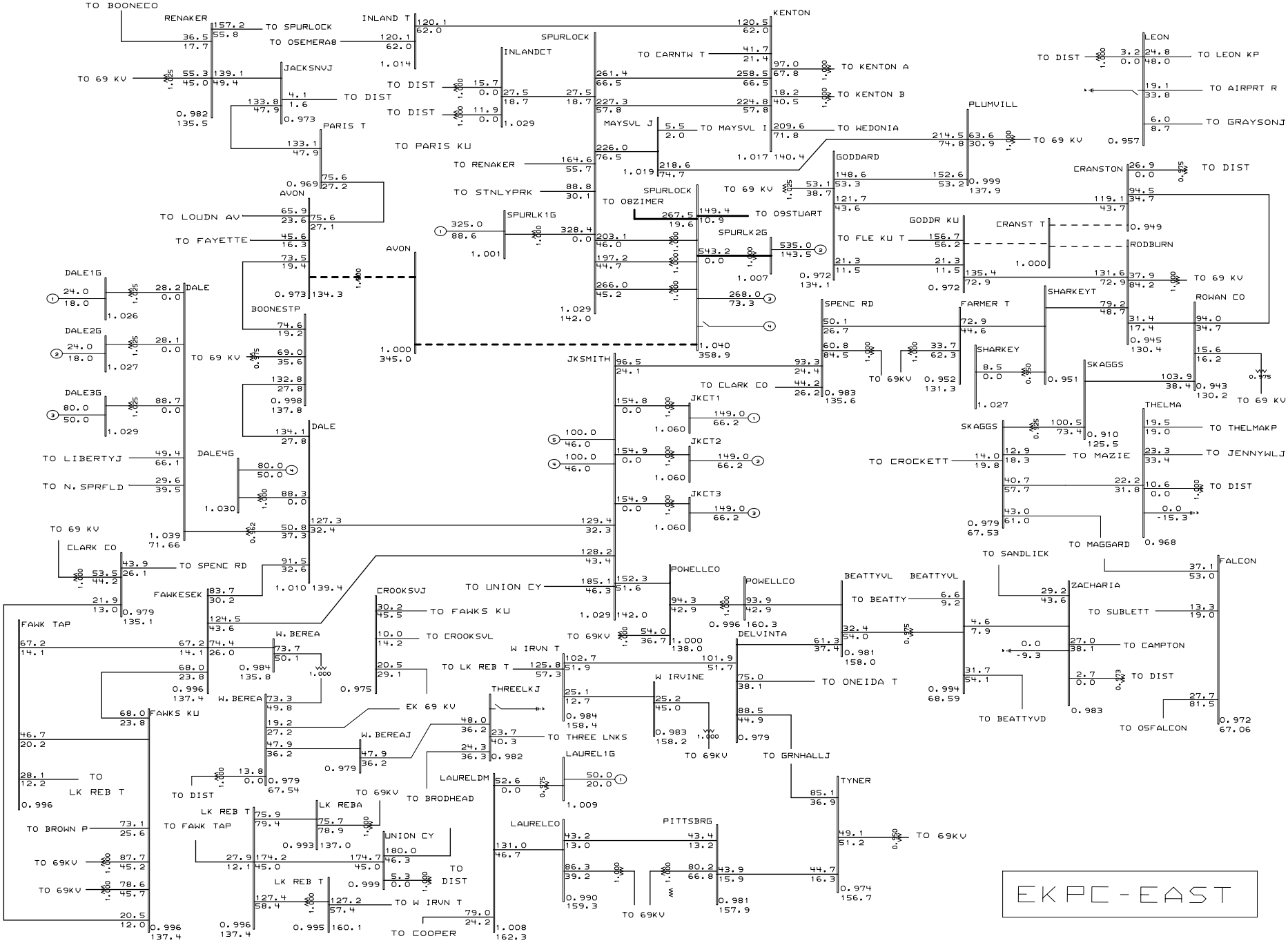

General Electric International, Inc. PSLF Program MVA/Pct Mon Apr 08 12:43:14 2002

EAST KENTUCKY Power Cooperative

2005-06 Winter LGEE-EKPC Base Case 12/26/2001 DWA
INCLUDES GILBERT #3 GEN AND CONSTR;IMPORT FROM NORTH;UPDATED BASE CASE
CRANSTON-ROWAN CO 138 KV ADDED;SPURLOCK-AVON 345 KV OUT;AUTO CAP SWITCHING

g34-05e.drw
06wg3.sav
Rating = 4