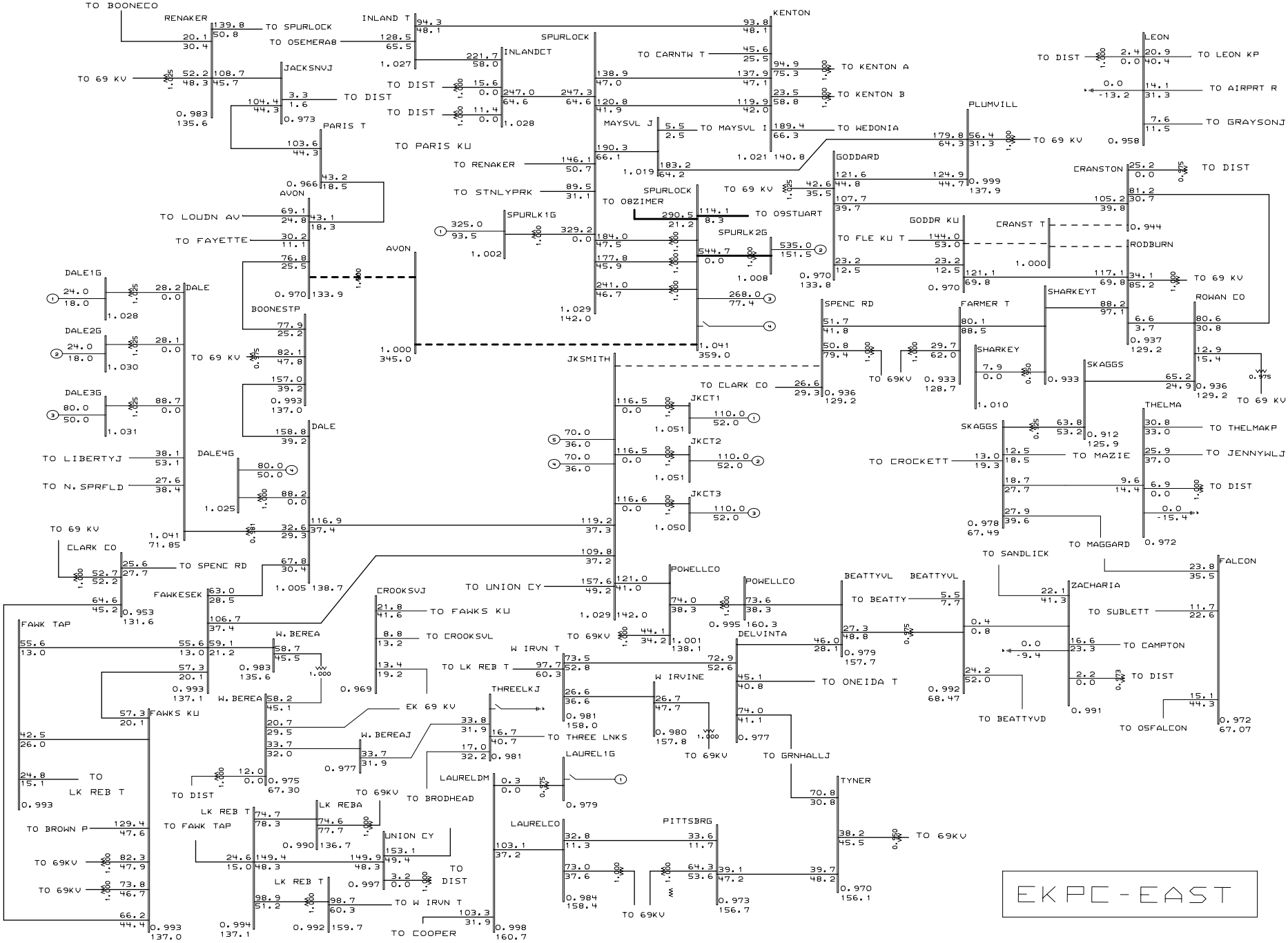

General Electric International, Inc. PSLF Program MVA/Pct Mon Apr 08 12:42:09 2002

EAST KENTUCKY Power Cooperative

2005 Summer LGEE-EKPC Base Case 12/3/01 DWA
INCLUDES GILBERT #3 GEN AND CONSTR;IMPORT FROM NORTH;UPDATED BASE CASE
CRANSTON-ROWAN CO 138 KV ADDED;SPURLOCK-AVON 345 KV OUT;AUTO CAP SWITCHING

WITHOUT JKSMITH-SPENCER ROAD 138 KV LINE

g34-05e.drw
05sg3.sav
Rating = 2