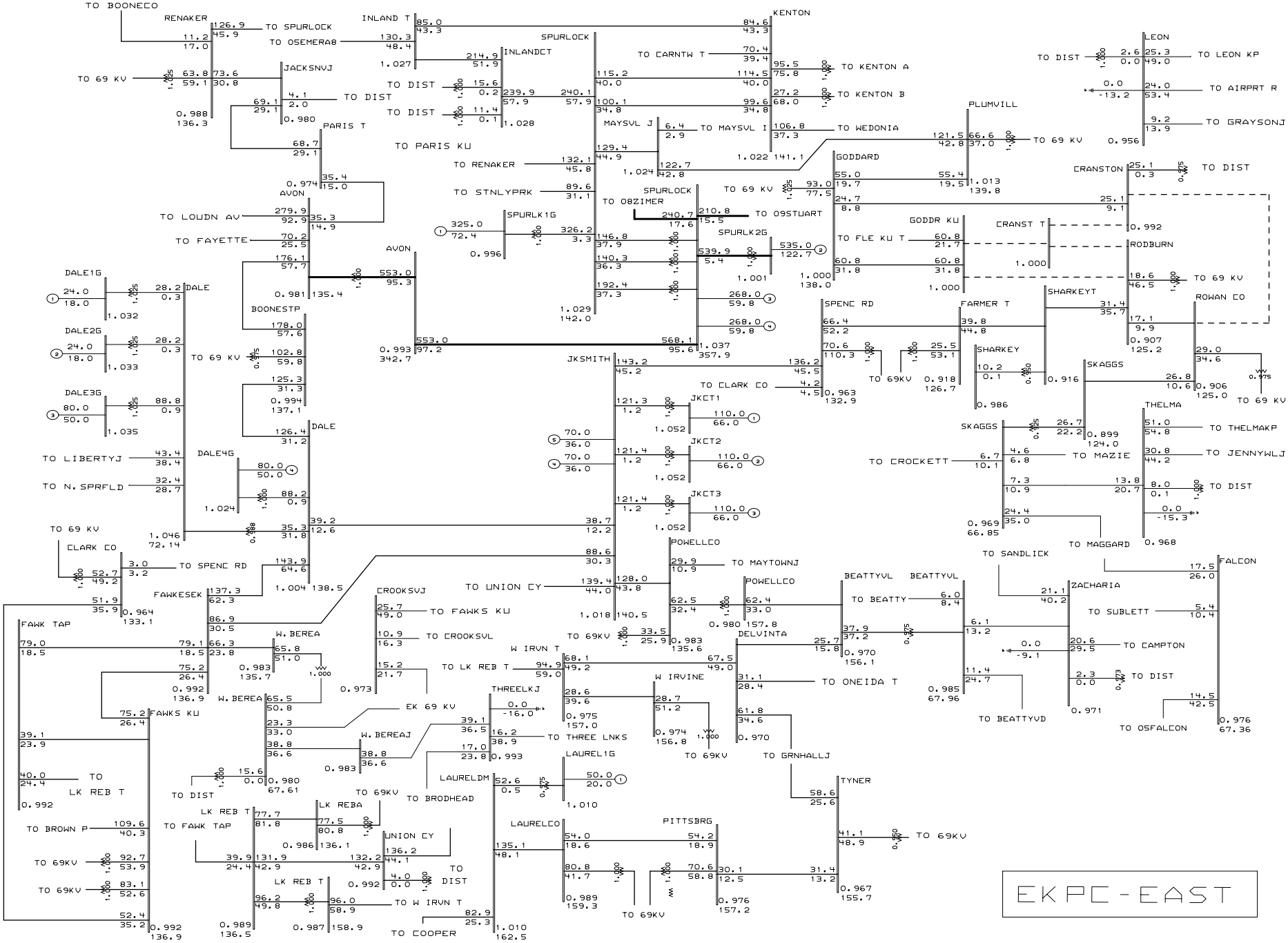

General Electric International, Inc. PSLF Program MVA/Pct Mon Apr 08 15:05:44 2002

EAST KENTUCKY Power Cooperative

2010 Summer LGEE-EKPC Base Case 4/19/01 PGK-MKS
GILBERT #3/SPURLOCK #4 GEN & CONSTRUCTION;IMPORT FROM NORTH
GODDARD-RODBURN 138 KV OUT;AUTO CAP SWITCHING

g34-10e.drw
10sg34.sav
Rating = 2