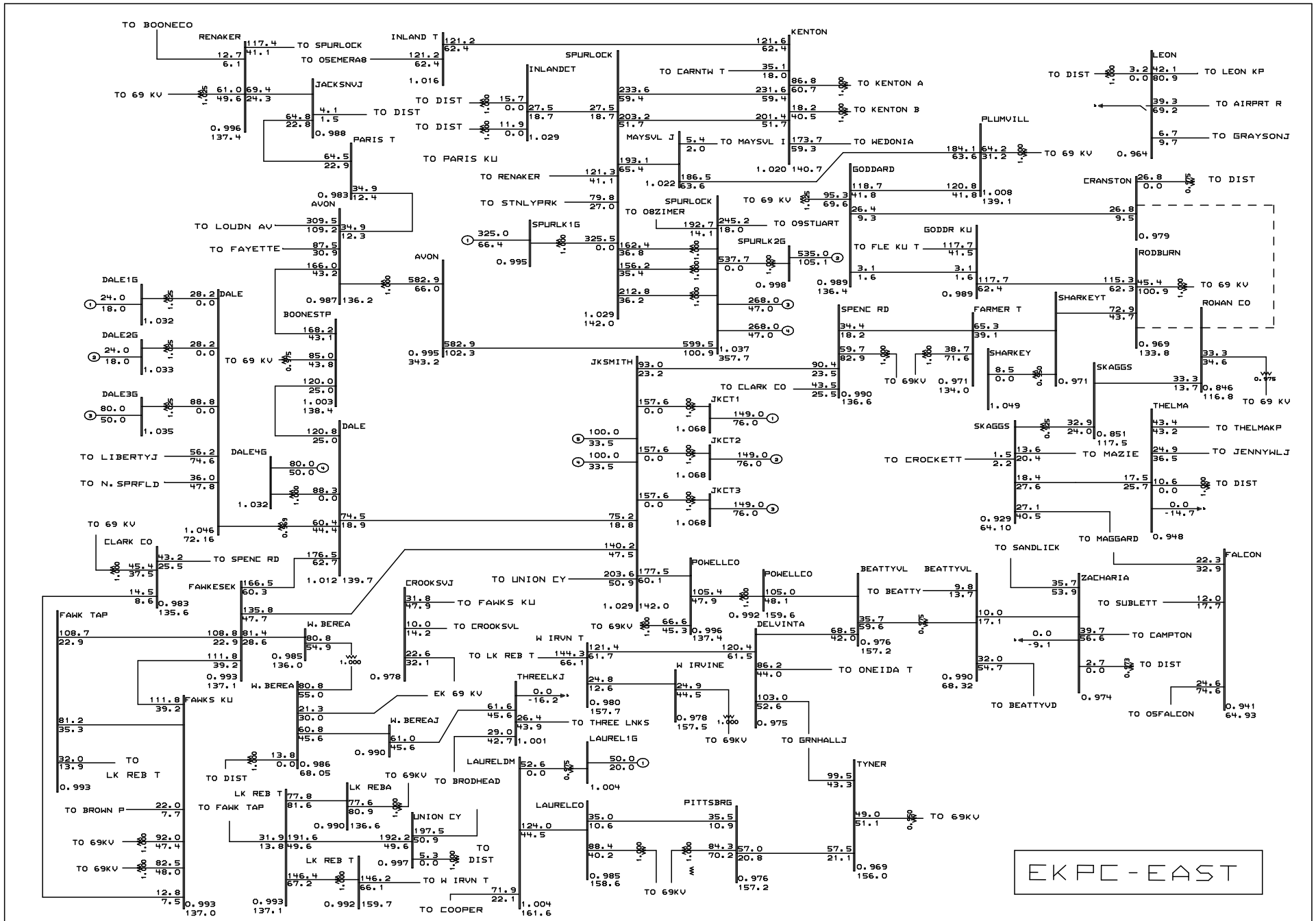
EKPC-EAST
TO BOONECO
RENAKER
TO SPURLOCK
TO 05EMERA8
INLAND T
KENTON
SPURLOCK
INLANDCT
TO CARNTW T
TO KENTON A
TO KENTON B
LEON
TO DIST
TO LEON KP
TO AIRPRT R
TO GRAYSONJ
TO 69 KV
JACKSNVJ
TO DIST
PARIS T
TO PARIS KU
MAYSVL J
TO MAYSVL I
TO WEDONIA
PLUMVILL
TO RENAKER
GODDARD
CRANSTON
TO STNLYPRK
TO 08ZIMER
SPURLK1G
SPURLK2G
TO 09STUART
TO LOUDN AV
AVON
TO FAYETTE
GODDR KU
TO FLE KU T
RODBURN
DALE1G
DALE
DALE2G
BOONESTP
ROWAN CO
SPENC RD
FARMER T
SHARKEYT
SHARKEY
SKAGGS
DALE3G
JKSMITH
TO CLARK CO
JKCT1
JKCT2
JKCT3
THELMA
TO THELMAKP
TO JENNYWLJ
TO LIBERTYJ
DALE4G
TO N. SPRFLD
TO CROCKETT
TO MAZIE
TO MAGGARD
TO SANDLICK
CLARK CO
TO SPENC RD
FAWKESEK
TO UNION CY
POWELLCO
BEATTYVL
TO BEATTY
ZACHARIA
FALCON
TO SUBLETT
TO CAMPTON
TO OSFALCON
TO BEATTYVD
FAWK TAP
W. BEREA
CROOKSVJ
TO FAWKS KU
TO CROOKSVL
W IRVN T
TO LK REB T
DELVINTA
TO ONEIDA T
W IRVINE
EK 69 KV
THREELKJ
TO THREE LNKS
W. BEREAJ
FAWKS KU
LAUREL1G
LAURELDM
TO GRNHALLJ
TO BROWN P
LK REB T
LK REBA
TO FAWK TAP
UNION CY
TO BRODHEAD
LAURELCO
PITTSBRG
TYNER
TO W IRVN T
TO COOPER
General Electric International, Inc.
PSLF Program
MVA/Pct
Sat Apr 09 17:37:43 2005
EAST KENTUCKY
Power Cooperative
2005/06 Winter LGEE-EKPC Base Case 12/26/2001 DWA
INCLUDES GILBERT #3 AND #4 GENERATION AND CONSTRUCTIO--UPDATED BASE CASE
BROWN #3 OFF;IMPORT 441 MW(CIN)
WITHOUT CRANSTON-ROWAN CO 138 KV
RODBURN-ROWAN COUNTY 138 KV OUT;AUTO CAP SWITCHING
g34-05e.drw
06wg34-3.sav
Rating = 4