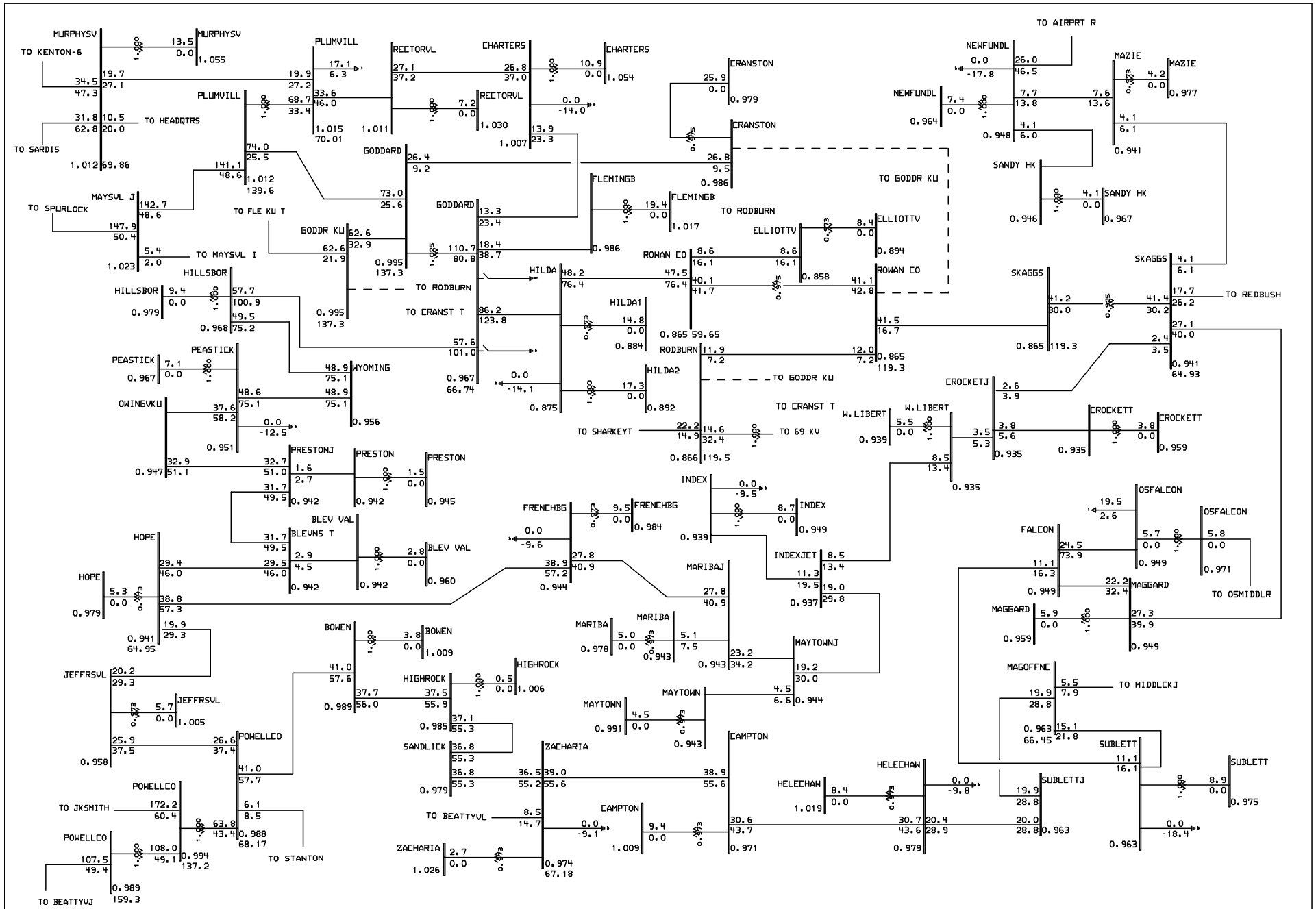

General Electric International, Inc. PSLF Program MVA/Pct Sat Apr 09 17:37:40 2005

EAST KENTUCKY Power Cooperative	2005/06 Winter LGEE-EKPC Base Case 12/26/2001 DWA INCLUDES GILBERT #3 AND #4 GENERATION AND CONSTRUCTIO--UPDATED BASE CASE BROWN #3 OFF;IMPORT 441 MW(CIN)	WITHOUT CRANSTON-ROWAN CO 138 KV;W/O JK-SPENCER 138 KV GODDARD-RODBURN 138 KV OUT;AUTO CAP SWITCHING	goddpcskgs05.drw 06wg34-3.sav Rating = 4