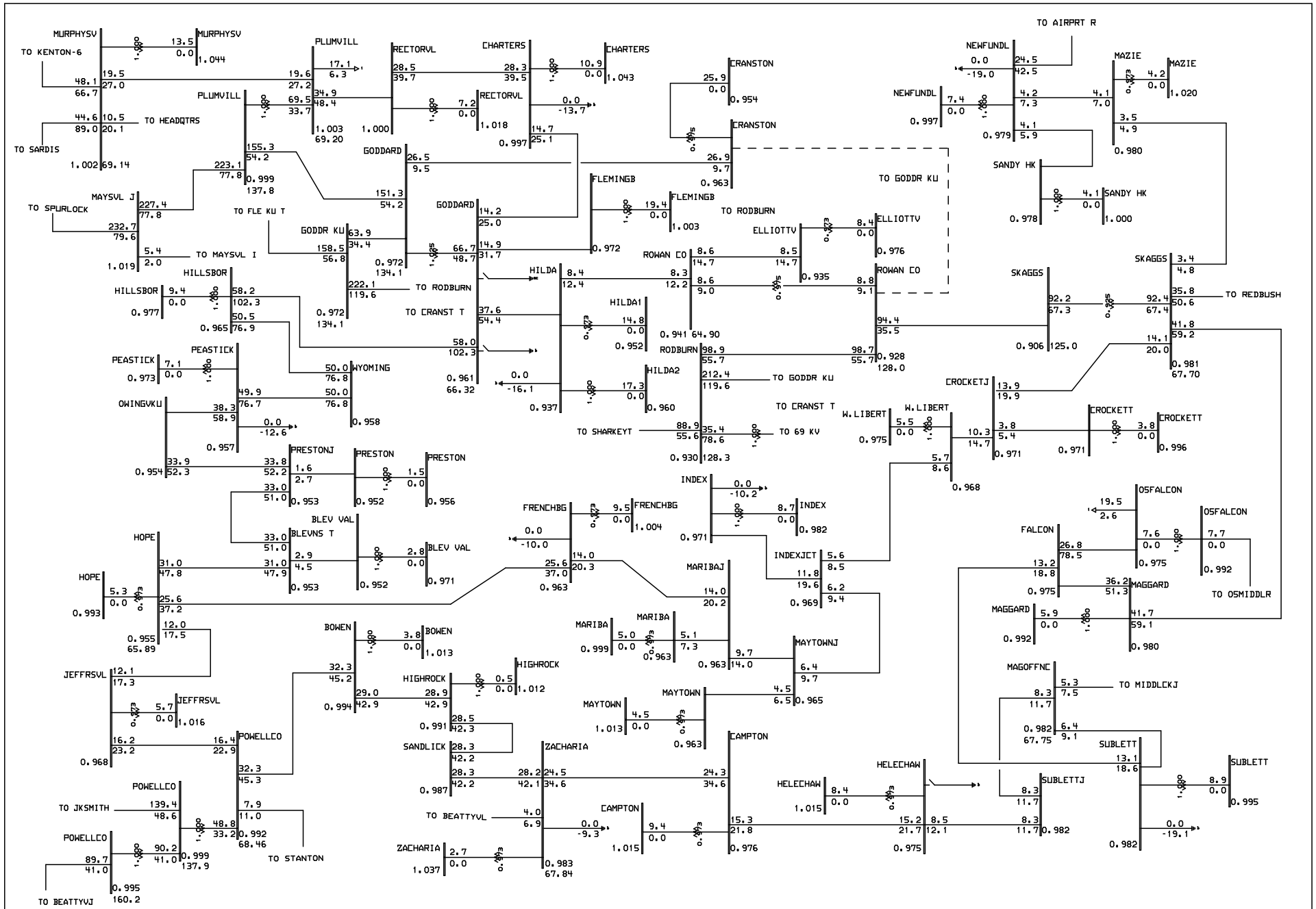

General Electric International, Inc. PSLF Program MVA/Pct Sat Apr 09 17:37:27 2005

EAST KENTUCKY Power Cooperative

2005/06 Winter LGEE-EKPC Base Case 12/26/2001 DWA
INCLUDES GILBERT #3 AND #4 GENERATION AND CONSTRUCTIO--UPDATED BASE CASE
BROWN #3 OFF;IMPORT 441 MW(CIN)

WITHOUT CRANSTON-ROWAN CO 138 KV
SPURLOCK-AVON 345 KV OUT;AUTO CAP SWITCHING

goddpcskgs05.drw
06wg34-3.sav
Rating = 4