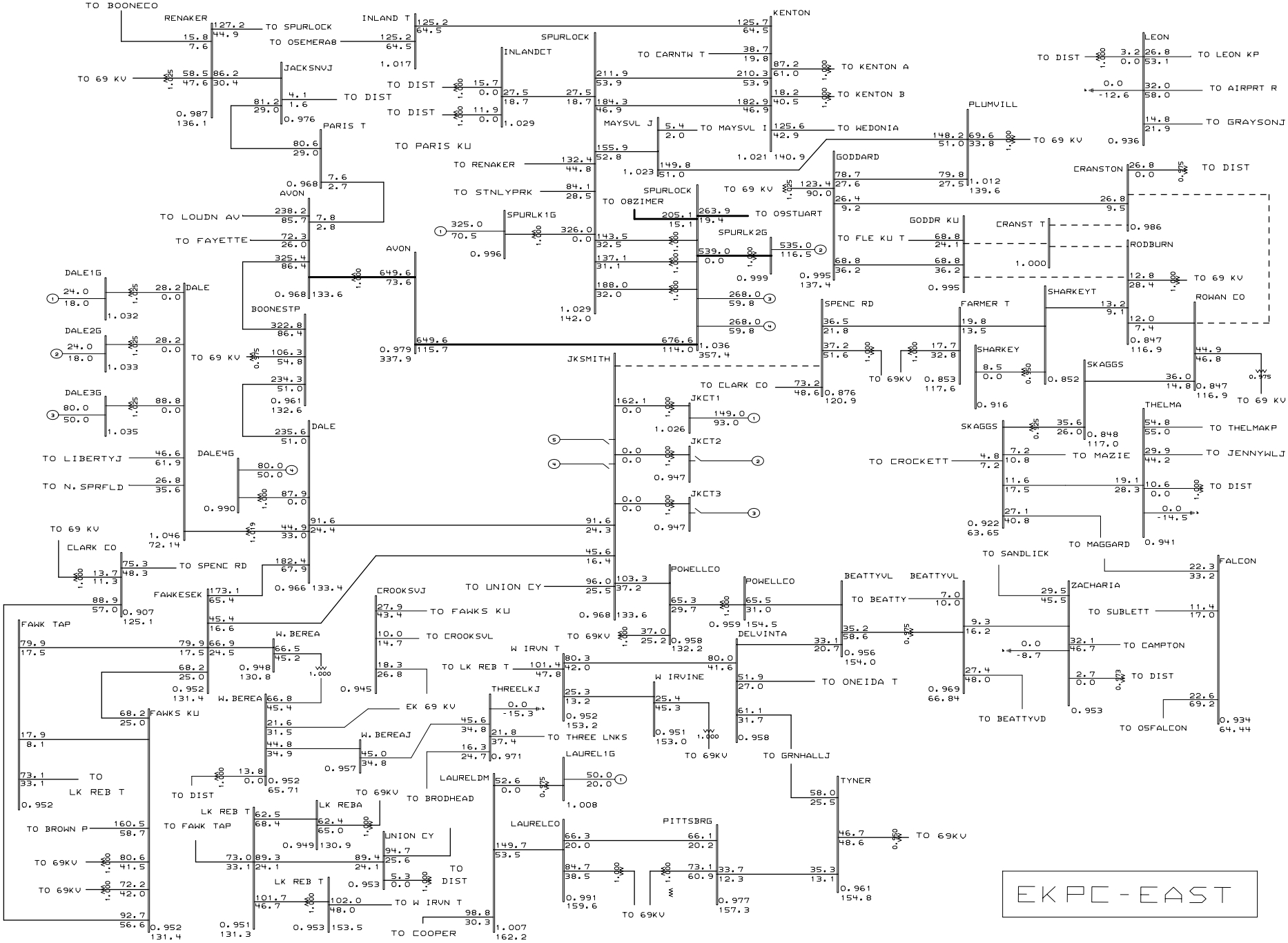

General Electric International, Inc. PSLF Program MVA/Pct Tue Apr 02 13:24:01 2002

EAST KENTUCKY Power Cooperative

2005/06 Winter LGEE-EKPC Base Case 12/26/2001 DWA;1-JKSMITH CT ON IMPORT FROM NORTH;GILBERT #3/SPURLOCK #4 GEN & CONSTRUCTION WITHOUT CRANSTON-ROWAN CO 138 KV;W/O JK-SPENCER 138 KV

GODDARD-RODBURN 138 KV OUT;AUTO CAP SWITCHING

g34-05e.drw
06wg34-7.sav
Rating = 4