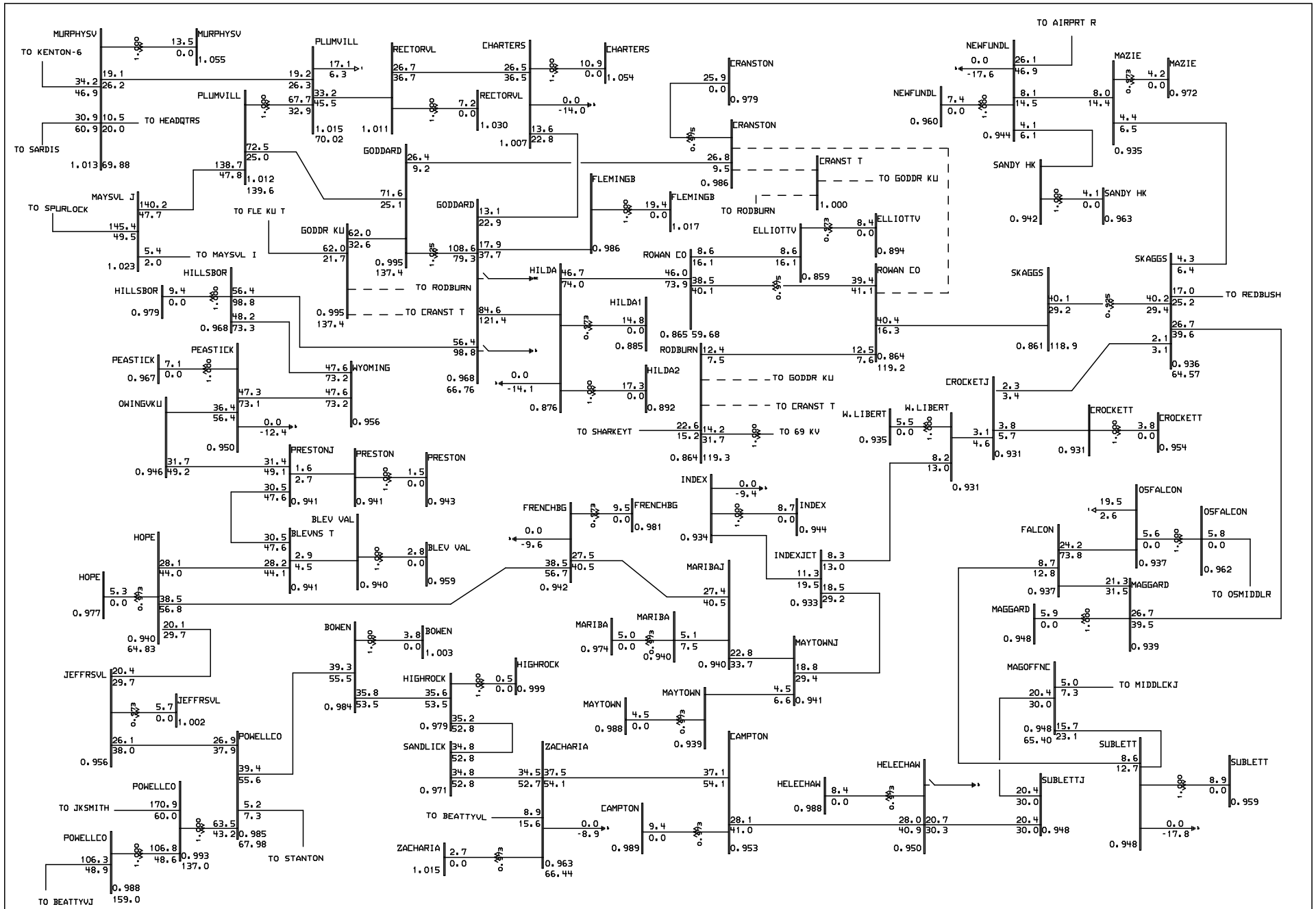


General Electric International, Inc. PSLF Program MVA/Pct Sat Apr 09 11:40:52 2005

EAST KENTUCKY Power Cooperative

2005/06 Winter LGEE-EKPC Base Case 12/26/2001 DWA
INCLUDES GILBERT #3 GEN AND CONSTR;IMPORT FROM NORTH;UPDATED BASE CASE
BROWN #3 OFF;IMPORT 441 MW(CIN)

WITHOUT CRANSTON-ROWAN CO 138 KV;W/O JK-SPENCER 138 KV
GODDARD-RODBURN 138 KV OUT;AUTO CAP SWITCHING

goddpcskgs05.drw
06wg3-3.sav
Rating = 4