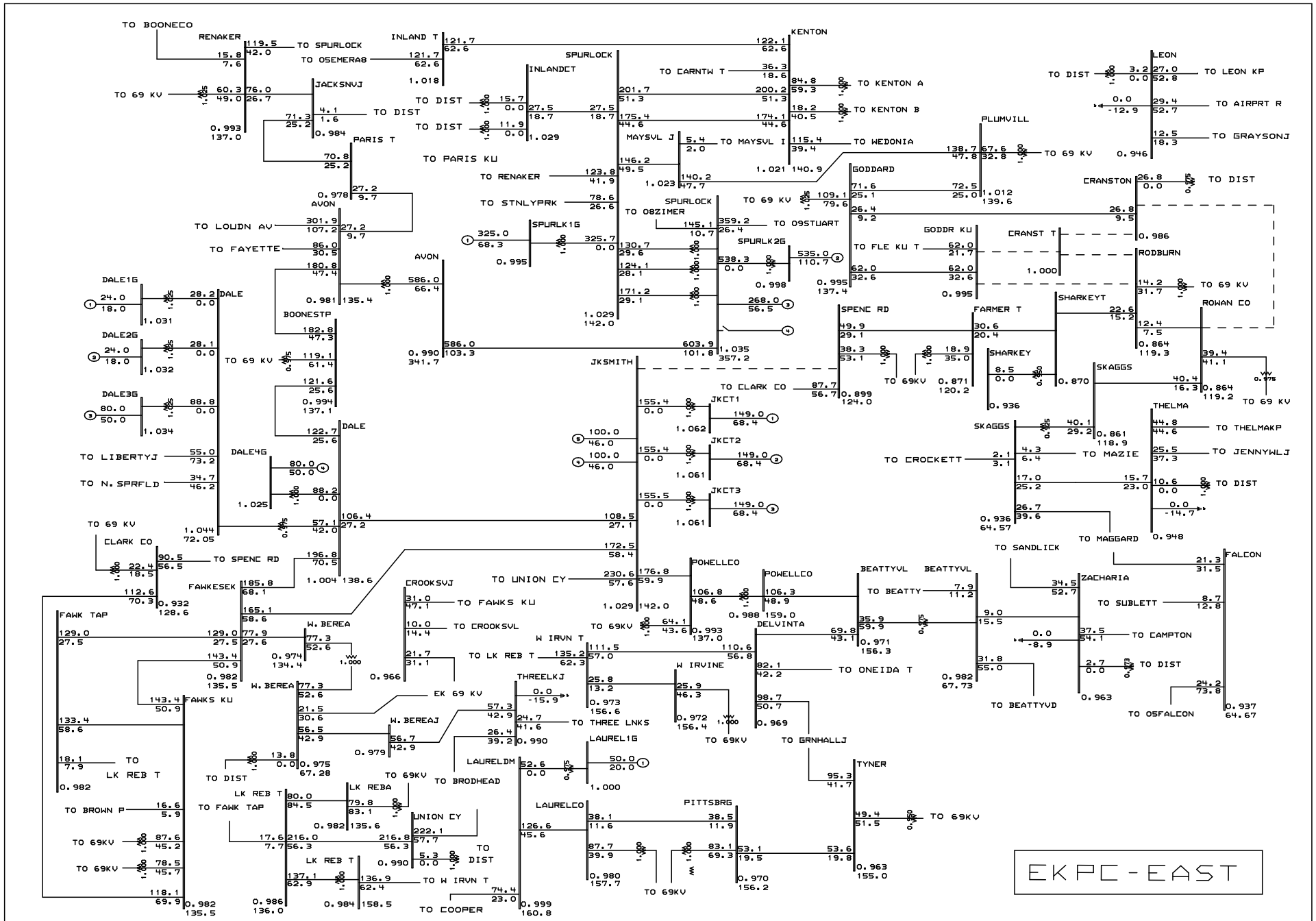
EKPC-EAST
TO BOONECO
RENAKER
TO SPURLOCK
TO 05EMERA8
INLAND T
KENTON
SPURLOCK
INLANDCT
TO CARNTW T
TO KENTON A
TO KENTON B
LEON
TO DIST
TO LEON KP
TO AIRPRT R
TO GRAYSONJ
TO 69 KV
JACKSNVJ
TO DIST
PARIS T
TO PARIS KU
MAYSVL J
TO MAYSVL I
TO WEDONIA
PLUMVILL
TO 69 KV
GODDARD
TO RENAKER
TO STNLYPRK
TO 08ZIMER
SPURLOCK
TO 69 KV
CRANSTON
TO DIST
AVON
TO LOUDN AV
SPURLK1G
TO 09STUART
SPURLK2G
GODDR KU
CRANST T
TO FAYETTE
TO FLE KU T
RODBURN
TO 69 KV
DALE1G
DALE
DALE2G
BOONESTP
TO 69 KV
SPENC RD
FARMER T
SHARKEYT
ROWAN CO
DALE3G
JKSMITH
TO CLARK CO
SHARKEY
SKAGGS
TO 69KV
TO 69 KV
JKCT1
JKCT2
JKCT3
THELMA
TO LIBERTYJ
DALE4G
SKAGGS
TO THELMAKP
TO N. SPRFLD
TO CROCKETT
TO MAZIE
TO JENNYWLJ
TO DIST
TO 69 KV
TO MAGGARD
CLARK CO
TO SPENC RD
TO SANDLICK
FALCON
FAWKESEK
TO UNION CY
POWELLCO
POWELLCO
BEATTYVL
BEATTYVL
ZACHARIA
CROOKSVJ
TO FAWKS KU
TO SUBLETT
FAWK TAP
TO CROOKSVL
TO 69KV
DELVINTA
TO BEATTY
W. BEREA
W IRVN T
TO CAMPTON
TO LK REB T
TO ONEIDA T
TO DIST
EK 69 KV
THREELKJ
W IRVINE
FAWKS KU
W. BEREAJ
TO THREE LNKS
TO 69KV
TO GRNHALLJ
TO BEATTYVD
TO OSFALCON
TO
LK REB T
TO DIST
TO 69KV
LAUREL1G
LAURELDM
TO BRODHEAD
TYNER
TO BROWN P
TO FAWK TAP
LK REB T
LK REBA
UNION CY
LAURELCO
PITTSBRG
TO 69KV
TO 69KV
TO 69KV
TO DIST
LK REB T
TO W IRVN T
TO COOPER
TO 69KV
General Electric International, Inc.
PSLF Program
MVA/Pct
Sat Apr 09 11:40:52 2005
EAST KENTUCKY
Power Cooperative
2005/06 Winter LGEE-EKPC Base Case 12/26/2001 DWA
INCLUDES GILBERT #3 GEN AND CONSTR;IMPORT FROM NORTH;UPDATED BASE CASE
BROWN #3 OFF;IMPORT 441 MW(CIN)
WITHOUT CRANSTON-ROWAN CO 138 KV;W/O JK-SPENCER 138 KV
GODDARD-RODBURN 138 KV OUT;AUTO CAP SWITCHING
g34-05e.drw
06wg3-3.sav
Rating = 4