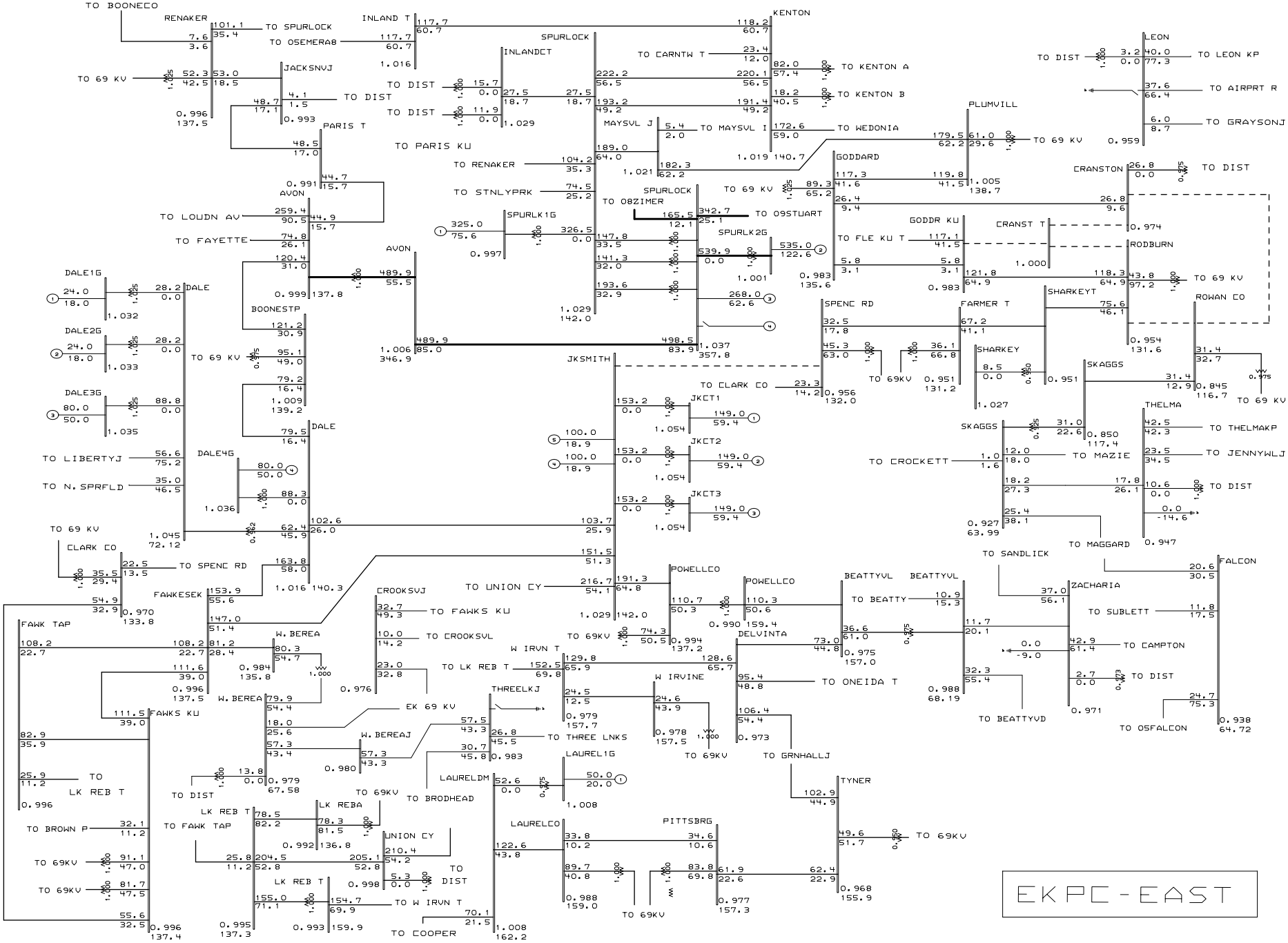

General Electric International, Inc. PSLF Program MVA/Pct Wed Mar 27 11:19:33 2002

EAST KENTUCKY Power Cooperative

2005/06 Winter LGEE-EKPC Base Case 12/26/2001 DWA
INCLUDES GILBERT #3 GEN AND CONSTR;IMPORT FROM NORTH;UPDATED BASE CASE
WITHOUT CRANSTON-ROWAN CO 138 KV

RODBURN-ROWAN COUNTY 138 KV OUT;AUTO CAP SWITCHING
WITHOUT JKSMITH-SPENCER ROAD 138 KV LINE

g34-05e.drw
06wg3.sav
Rating = 4