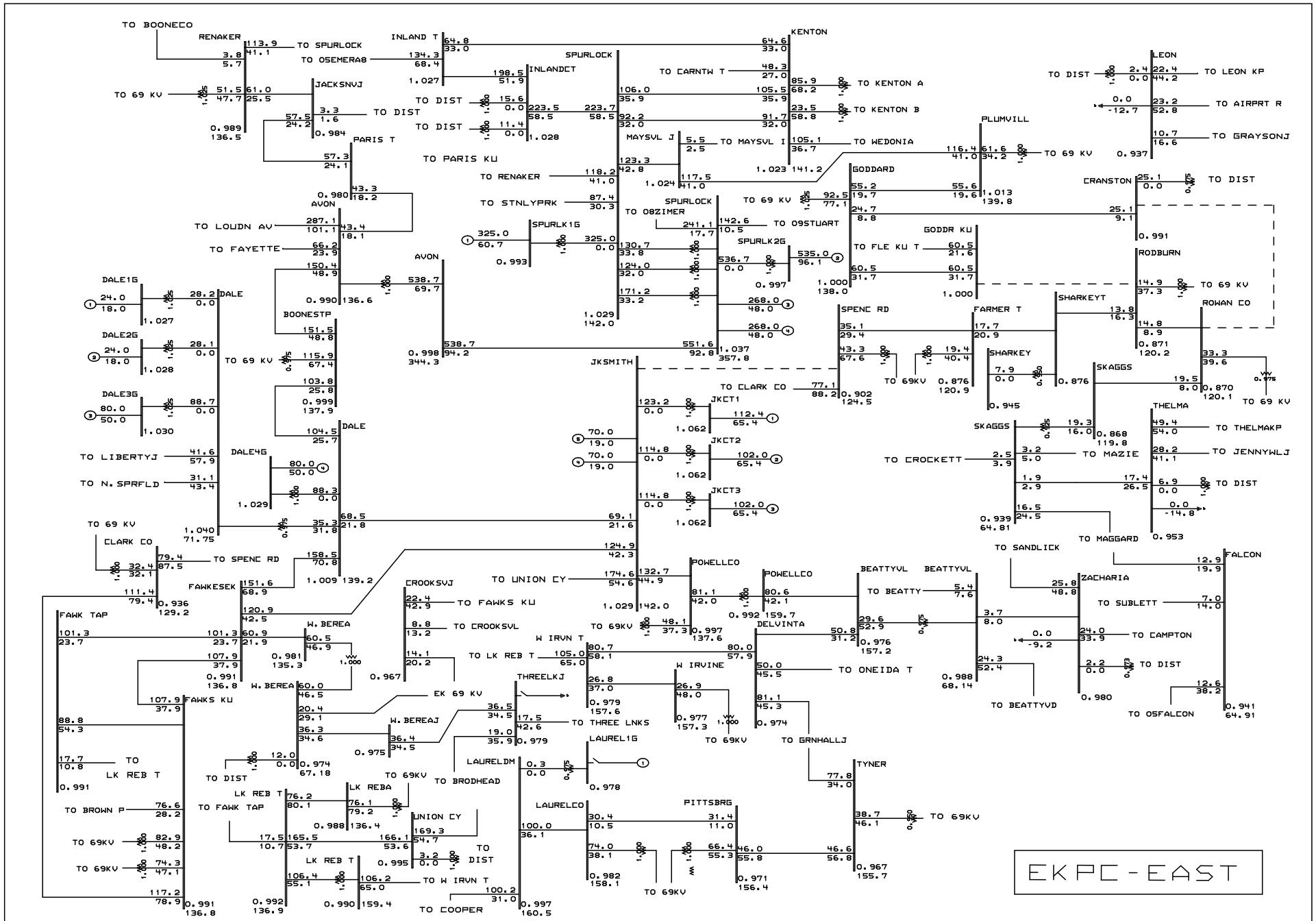

General Electric International, Inc. PSLF Program MVA/Pct Sat Apr 09 12:22:02 2005

EAST KENTUCKY Power Cooperative

2005 Summer LGEE-EKPC Base Case 12/3/01 DWA
INCLUDES GILBERT #3/SPURLOCK #4 GEN AND CONSTRUCTION;UPDATED BASE CASE
BROWN #3 OFF;IMPORT 441 MW(CIN)

WITHOUT CRANSTON-ROWAN CO 138 KV;W/O JK-SPENCER 138 KV
GODDARD-RODBURN 138 KV OUT;AUTO CAP SWITCHING

g34-05e.drw
05sg34-3.sav
Rating = 2