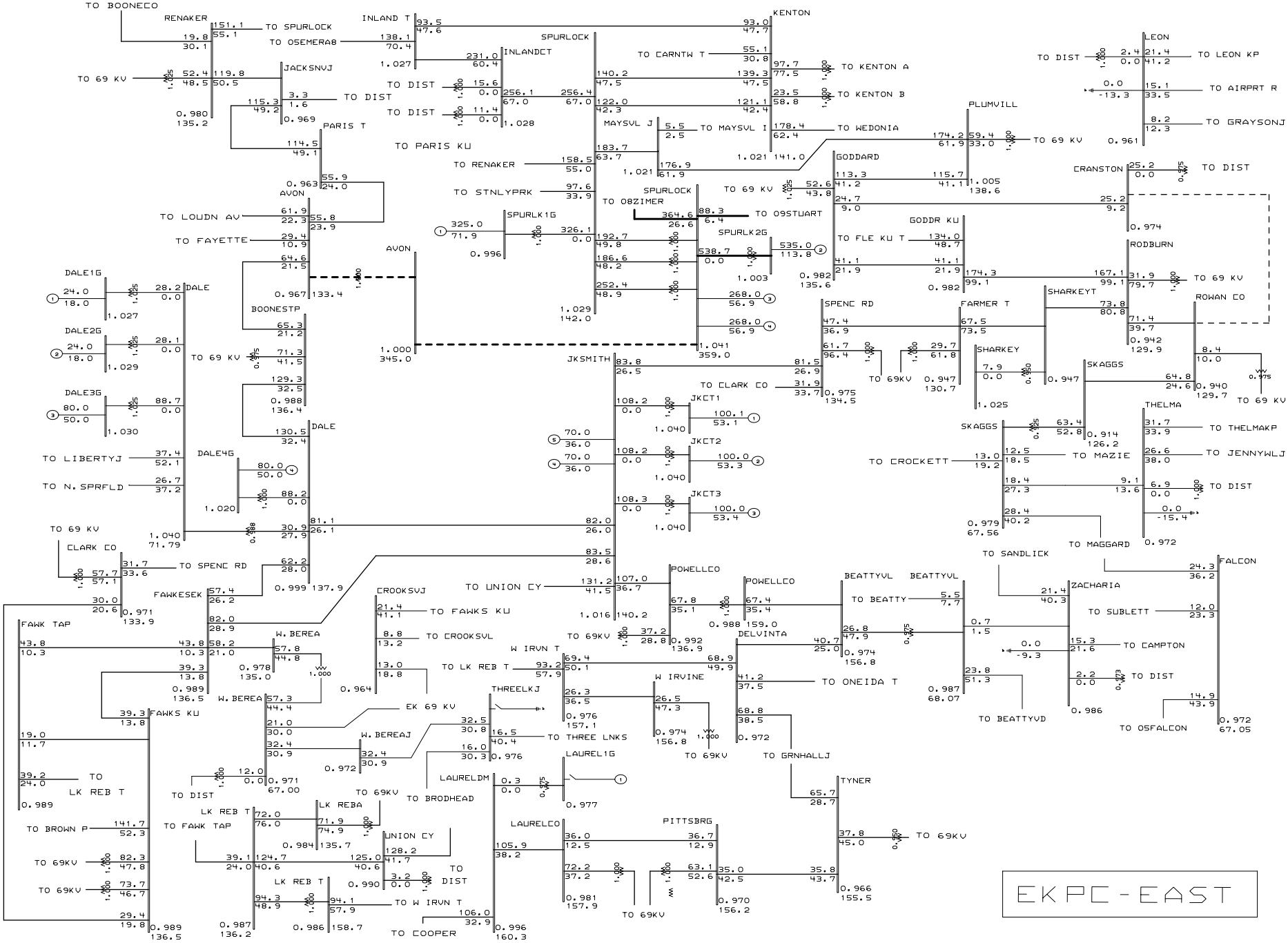

General Electric International, Inc. PSLF Program MVA/Pct Mon Apr 08 15:45:47 2002

EAST KENTUCKY Power Cooperative

2005 Summer LGEE-EKPC Base Case 12/3/01 DWA;UPDATED BASE CASE
INCLUDES GILBERT #3/SPURLOCK #4 GEN AND CONSTRUCTION
SPURLOCK-AVON 345 KV OUT;AUTO CAP SWITCHING

g34-05e.drw
05sg34.sav
Rating = 2