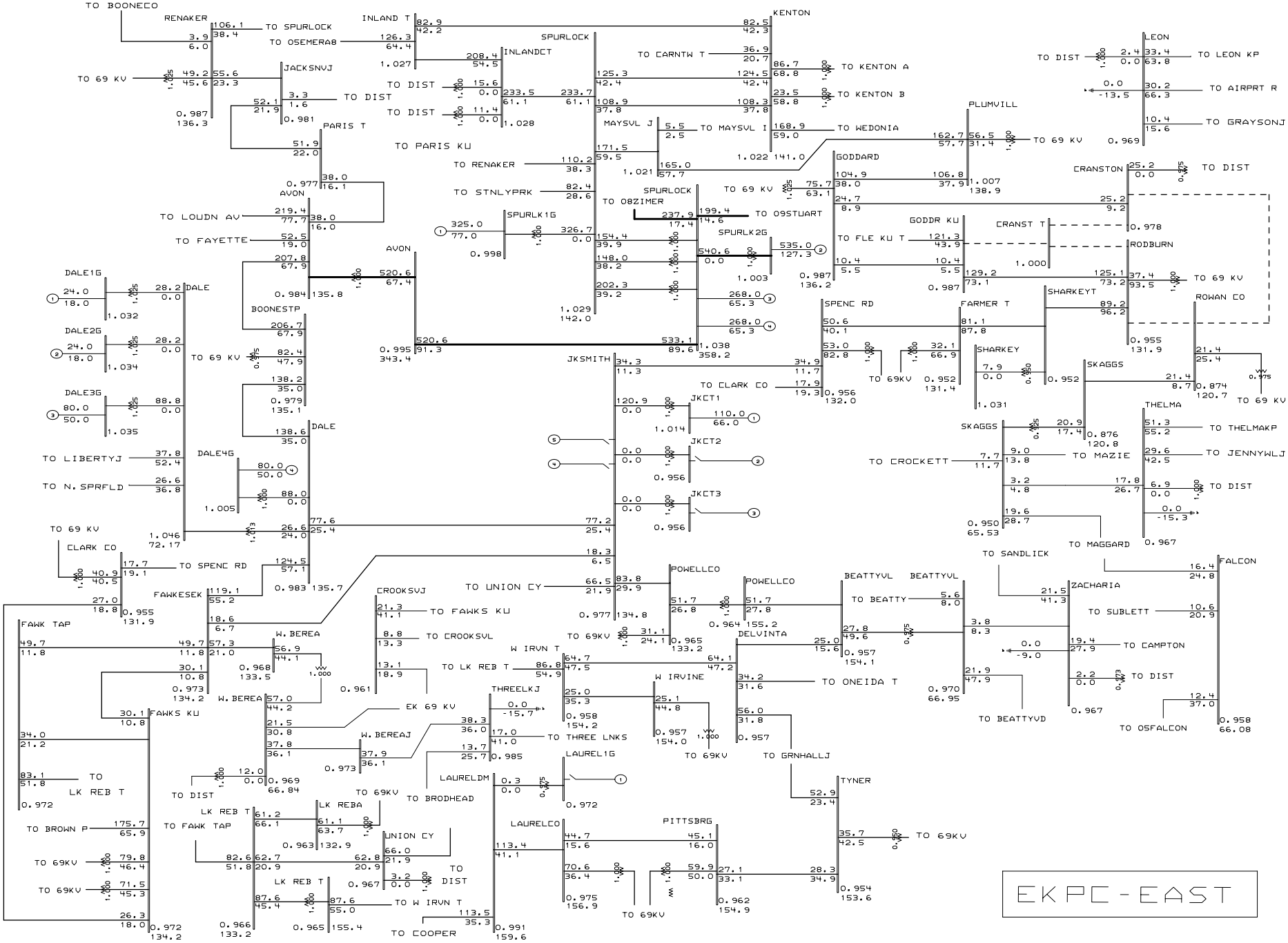
EKPC-EAST
TO BOONECO
RENAKER
TO SPURLOCK
TO OSEMERA8
INLAND T
KENTON
SPURLOCK
INLANDCT
TO CARNTW T
TO KENTON A
TO KENTON B
TO 69 KV
JACKSNVJ
TO DIST
TO PARIS KU
PARIS T
MAYSVL J
TO MAYSVL I
TO WEDONIA
PLUMVILL
LEON
TO LEON KP
TO AIRPRT R
TO GRAYSONJ
TO RENAKER
TO STNLYPRK
TO 08ZIMER
TO 09STUART
GODDARD
CRANSTON
GODDR KU
TO FLE KU T
CRANST T
RODBURN
TO LOUDN AV
AVON
TO FAYETTE
SPURLK1G
SPURLK2G
DALE1G
DALE2G
DALE3G
DALE
BOONESTP
SPENC RD
FARMER T
SHARKEYT
ROWAN CO
SHARKEY
SKAGGS
THELMA
TO LIBERTYJ
TO N.SPRFLD
DALE4G
JKSMITH
TO CLARK CO
JKCT1
JKCT2
JKCT3
TO CROCKETT
TO MAZIE
TO MAGGARD
CLARK CO
TO SPENC RD
FAWKESEK
CROOKSVJ
TO FAWKS KU
TO CROOKSVL
TO UNION CY
POWELLCO
BEATTYVL
TO BEATTY
ZACHARIA
TO SUBLETT
TO CAMPTON
FALCON
TO SANDLICK
TO OSFALCON
TO BEATTYVD
FAWK TAP
W.BEREA
W IRVN T
TO LK REB T
DELVINTA
TO ONEIDA T
W IRVINE
EK 69 KV
THREELKJ
TO THREE LNKS
W.BEREAJ
FAWKS KU
TO GRNHALLJ
TYNER
LAUREL1G
LAURELDM
TO BRODHEAD
LK REB T
LK REBA
TO BROWN P
TO FAWK TAP
UNION CY
LAURELCO
PITTSBRG
TO W IRVN T
TO COOPER
General Electric International, Inc.
PSLF Program
MVA/Pct
Tue Apr 02 11:26:17 2002
EAST KENTUCKY
Power Cooperative
2005 Summer LGEE-EKPC Base Case 12/3/01 DWA;1-JKSMITH CT ON
IMPORT FROM NORTH;GILBERT #3/SPURLOCK #4 GEN & CONSTRUCTION
WITHOUT CRANSTON-ROWAN CO 138 KV
RODBURN-ROWAN COUNTY 138 KV OUT;AUTO CAP SWITCHING
g34-05e.drw
05sg34-7.sav
Rating = 2