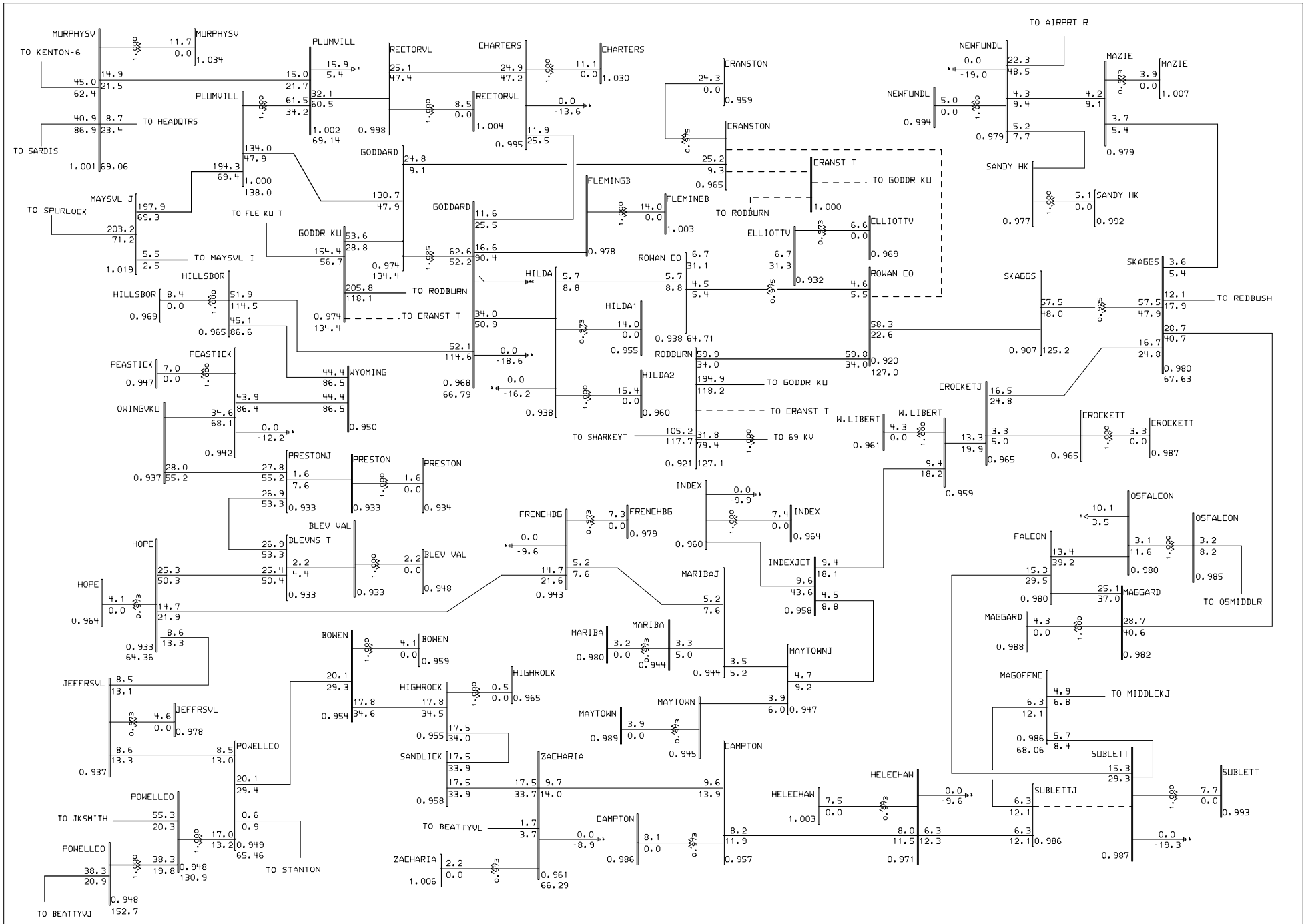


General Electric International, Inc. PSLF Program MVA/Pct Tue Apr 02 11:25:34 2002

EAST KENTUCKY Power Cooperative

2005 Summer LGEE-EKPC Base Case 12/3/01 DWA;1-JKSMITH CT ON IMPORT FROM NORTH;GILBERT #3/SPURLOCK #4 GEN & CONSTRUCTION WITHOUT CRANSTON-ROWAN CO 138 KV

SPURLOCK-AVON 345 KV OUT;AUTO CAP SWITCHING

goddpcskgs05.drw
05sg34-7.sav
Rating = 2