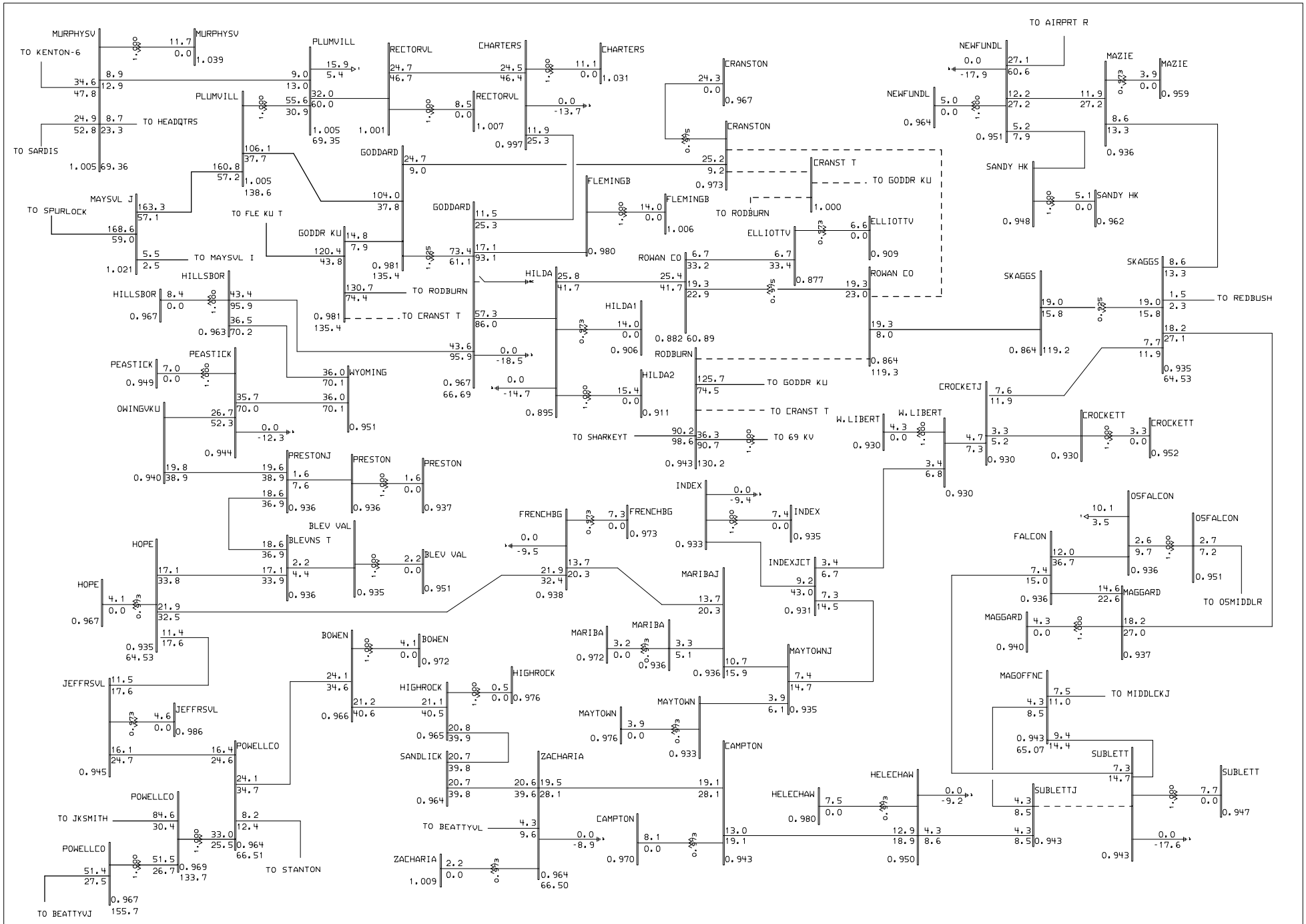

General Electric International, Inc. PSLF Program MVA/Pct Tue Apr 02 13:56:55 2002

EAST KENTUCKY Power Cooperative

2005 Summer LGEE-EKPC Base Case 12/3/01 DWA;1-JKSMITH CT ON IMPORT FROM NORTH;GILBERT #3 GEN & CONSTRUCTION WITHOUT CRANSTON-ROWAN CO 138 KV;W/O JK-SPENCER 138 KV

RODBURN-ROWAN COUNTY 138 KV OUT;AUTO CAP SWITCHING

goddpcskgs05.drw
05sg3-7.sav
Rating = 2