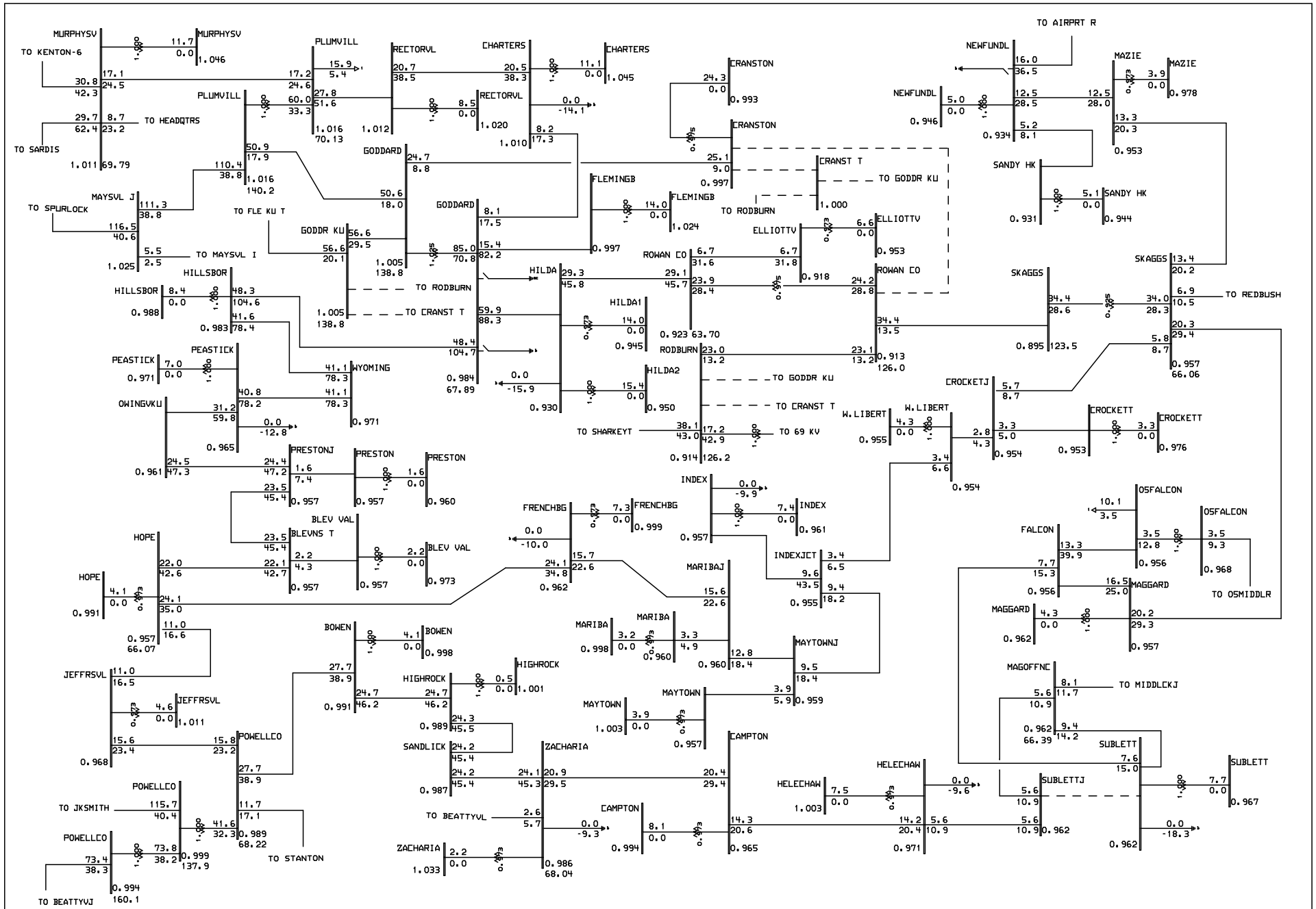
MURPHYSV
TO KENTON-6
TO HEADQTRS
TO SARDIS
PLUMVILL
RECTORVL
CHARTERS
CRANSTON
TO AIRPRT R
NEWFUNDL
MAZIE
GODDARD
FLEMINGB
CRANST T
TO GODDR KU
TO RODBURN
SANDY HK
MAYSVL J
TO SPURLOCK
TO FLE KU T
GODDR KU
ELLIOTTV
ROWAN CO
SKAGGS
TO REDBUSH
HILLSBOR
HILDA
HILDA1
TO CRANST T
PEASTICK
WYOMING
OWINGVKU
RODBURN
TO GODDR KU
TO SHARKEYT
TO 69 KV
CROCKETJ
W.LIBERT
CROCKETT
PRESTONJ
PRESTON
INDEX
INDEXJCT
OSFALCON
FALCON
MAGGARD
TO OSMIDDLR
FRENCHBG
BLEV VAL
BLEVNS T
HOPE
MARIBAJ
MARIBA
MAYTOWNJ
MAYTOWN
MAGOFFNC
TO MIDDLCKJ
BOWEN
HIGHROCK
JEFFRSVL
POWELLCO
SANDLICK
ZACHARIA
CAMPTON
HELECHAW
SUBLETT
SUBLETTJ
TO JKSMITH
TO BEATTYVL
TO STANTON
TO BEATTYVJ
General Electric International, Inc.
PSLF Program
MVA/Pct
Sat Apr 09 11:50:21 2005
EAST KENTUCKY
Power Cooperative
2005 Summer LGEE-EKPC Base Case 12/3/01 DWA
INCLUDES GILBERT #3 GEN AND CONSTR;IMPORT FROM NORTH;UPDATED BASE CASE
KU BROWN #3 OFF;IMPORT 441 MW(CIN)
WITHOUT CRANSTON-ROWAN CO 138 KV
GODDARD-RODBURN 138 KV OUT;AUTO CAP SWITCHING
goddpcskgs05.drw
05sg3-3.sav
Rating = 2