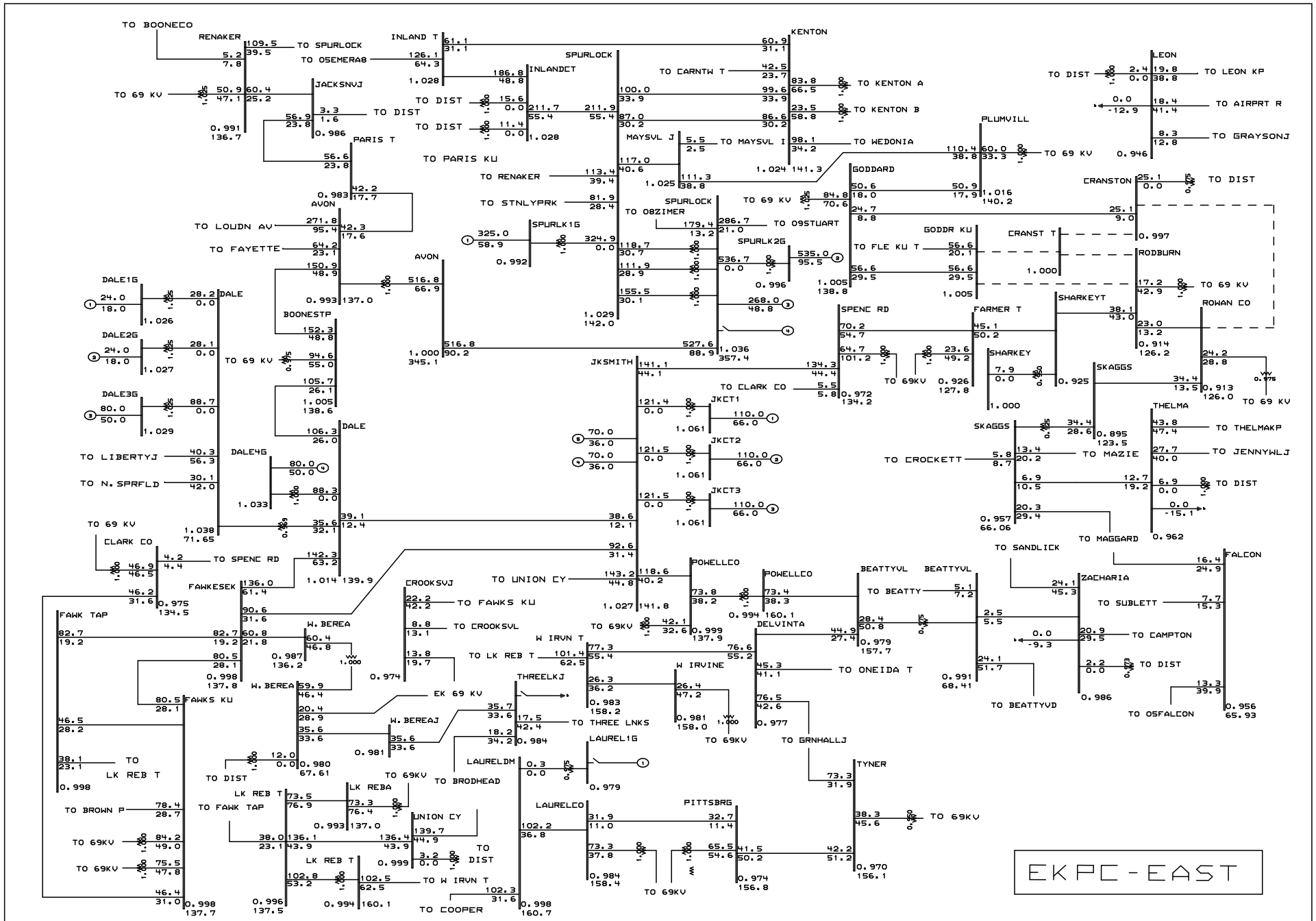

General Electric International, Inc. PSLF Program MVA/Pct Sat Apr 09 11:50:21 2005

EAST KENTUCKY Power Cooperative

2005 Summer LGEE-EKPC Base Case 12/3/01 DWA
INCLUDES GILBERT #3 GEN AND CONSTR;IMPORT FROM NORTH;UPDATED BASE CASE
KU BROWN #3 OFF;IMPORT 441 MW(CIN)

WITHOUT CRANSTON-ROWAN CO 138 KV
GODDARD-RODBURN 138 KV OUT;AUTO CAP SWITCHING

g34-05e.drw
05sg3-3.sav
Rating = 2